Sprinter

Operating Instructions +

Mercedes-Benz

F907 0076 02

Did you know?

In order to meet all needs, your operator's manual is available to you in various formats.
In addition to this PDF, the following options are open to you:

Digital in the vehicle
Discover the Operating Instructions in the multimedia system under Settings. Begin with Quick Start and discover useful tips.

Digital on the Internet
You can access the Operating Instructions on the Mercedes-Benz homepage https://om.mb4.me/WebOMs

Vehicle document wallet in the vehicle
Here you can find information on operation, service work and the warranty for your vehicle in printed form.

Digital as an app
The Mercedes-Benz Guides app is available free of charge in the customary app stores.

Apple® iOS

Android™

Front passenger airbag warning

Observe the chapter "Children in the vehicle".

WARNING
Risk of injury or fatal injuries if the front passenger airbag is enabled

If the front passenger airbag is enabled, a child on the front passenger seat may be struck by the front passenger airbag during an accident.

► NEVER use a rearward facing child restraint system on a seat protected by an ACTIVE AIRBAG in front of it, DEATH or SERIOUS INJURY to the CHILD can occur.

Welcome to the world of Mercedes-Benz

Before you first drive off, read these Operating Instructions carefully and familiarise yourself with your vehicle. For your own safety and a longer operating lifespan, follow the instructions and warning notices in these Operating Instructions. Disregarding them may lead to damage to the vehicle or injury to people.

THE EQUIPMENT FEATURES OR PRODUCT DESIGNATIONS OF YOUR VEHICLE MAY DIFFER FROM THE CONTENT DESCRIBED IN THE OPERATING INSTRUCTIONS. THE OPERATING INSTRUCTIONS DESCRIBE THE FOLLOWING CONTENT:

- The models and the standard and special equipment available at the time of these Operating Instructions going to press.
- The models and the standard and special equipment only available in certain countries.
- The models and the standard and special equipment which will only become available at a later date.

Please note that your vehicle may not be equipped with all features described. This also applies to safety-critical systems and functions. Your vehicle may therefore differ, in individual cases, from that shown in the descriptions and illustrations.

MERCEDES-BENZ KEEPS ADVANCING ITS VEHICLES CONSTANTLY AND THEREFORE RESERVES THE RIGHT TO INTRODUCE CHANGES IN THE FOLLOWING AREAS:

- Design
- Equipment
- Technical features

The latest and complete information about your vehicle and the description of any subsequently uploaded functions are contained in the Digital Operating Instructions in the multimedia system.

The illustrations in these Operating Instructions show a left-hand drive vehicle. On right-hand drive vehicles, the layout of vehicle components and control elements differs accordingly.

The original purchase agreement for your vehicle includes a list of the equipment features in your vehicle at the time of delivery.

THE FOLLOWING DOCUMENTS ARE COMPONENTS OF THE VEHICLE:

- Digital Operating Instructions in the multimedia system
- Printed Operating Instructions
- Service booklet
- Equipment-dependent supplements
- Supplementary documents

Always keep these documents in the vehicle. Ensure that all documents are in the vehicle or passed on when the vehicle is sold or loaned out.

For questions concerning equipment and operation, please contact a Mercedes-Benz service centre.

NOTE ON VEHICLES WHICH ARE EQUIPPED BY BODY MANUFACTURERS
Always observe the operating instructions provided by the body manufacturer. You could otherwise fail to recognise potential dangers.

F907 0076 02

Disclaimer
The following online version of the Owner's Manual describes all models, standard and special equipment of your vehicle. Country-specific differences in the language variants are possible. Note that your vehicle may not be fitted with all functions described. This is also the case for systems and functions relevant to safety.

Please contact your authorised Mercedes-Benz dealer in order to receive a printed Owner's Manual for other vehicle models and vehicle model years. The online Owner's Manual represents the respective current version. Any deviations from your concrete vehicle many not be taken into account, as Mercedes-Benz constantly adapts its vehicles to the latest state of the art, and makes changes to the design and equipment.

Please also read the printed Owner's Manual, supplementary documents and the digital Owner's Manual in the vehicle.

COPYRIGHT
All Rights Reserved. All texts, images and graphics are subject to copyright law and other laws protecting intellectual property. They may not be copied or changed for any commercial use or for the purpose of being passed on nor used on other websites.

F907 0076 02

Contents

This interactive PDF works like a website – tap or click a button to jump straight to where you want to go.
You can return here at any time via the navigation bar at the top left.

Symbols
Quick Start and Tips
At a glance
Digital Operating Instructions
General notes
Occupant safety
Children in the vehicle
Opening and closing
Seats and stowage
Light and vision
Climate control
Driving and parking
Instrument cluster and on-board computer
MBUX Voice Assistant
Mercedes-Benz Support calls and Digital Extras
MBUX multimedia system
Transporting
Maintenance and care
Breakdown assistance
Wheels and tyres
Technical data

Display messages and warning and indicator lamps

Index

Symbols

This interactive PDF works like a website – tap or click a button to jump straight to where you want to go.
You can return here at any time via the navigation bar at the top left.

In these Operating Instructions, you will find the following symbols:

WARNING
Danger due to not observing the warning notices

Warning notices draw your attention to hazards that may endanger your health or life, or the health or life of others.

▶ Observe the warning notices.

ENVIRONMENTAL NOTE
Environmental damage due to failure to observe environmental notes

Environmental notes include information on environmentally responsible behaviour or environmentally responsible disposal.

▶ Observe environmental notes.

NOTE
Damage to property due to failure to observe notes on material damage

Notes on material damage inform you of risks which may lead to your vehicle being damaged.

▶ Observe notes on material damage.

These symbols indicate useful instructions or further information that could be helpful to you.

▶	Instructions
(→ page)	Further information on a topic
Display	Messages on the display
⟶	Highest menu level to be selected in the multimedia/audio system
▶▶	Corresponding submenus to be selected in the multimedia/audio system
*	Indicates a cause

Quick Start and Tips

This interactive PDF works like a website – tap or click a button to jump straight to where you want to go.
You can return here at any time via the navigation bar at the top left.

Seats and outside mirrors
Children in the vehicle
Lights, windscreen wipers and air conditioning system
Radio
Wi-Fi hotspot
Connecting a mobile phone
MBUX Voice Assistant
Driving and driving safety systems
Parking Package
Navigation destination entry
New features on the multimedia system
At the filling station
Holiday preparations
Luggage and loading
Ice and snow
Help in the event of a breakdown
Expert tips

Seats and outside mirrors

Adjusting the seats and the outside mirrors

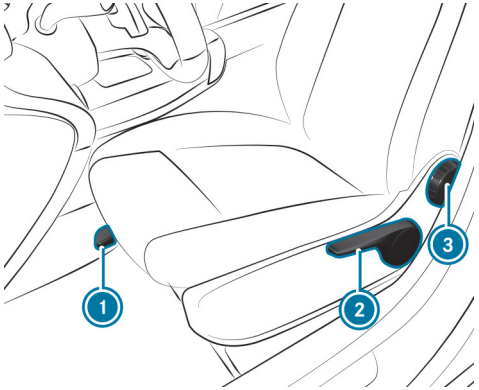

Vehicles without the Seat Comfort Package

1. Seat fore-and-aft position
2. Seat height
3. Seat backrest inclination

- **To adjust the seat fore-and-aft position:** lift lever 1 and engage the seat in the desired position.
- **To adjust the seat height:** keep on pressing or pulling lever 2 until the required seat height has been reached.
- **To adjust the seat backrest inclination:** rotate handwheel 3 forwards or backwards until the desired position has been reached.

Vehicles with the Seat Comfort Package

1. Seat cushion length
2. Seat backrest inclination
3. Seat height
4. Seat cushion inclination
5. Seat fore-and-aft position
6. Seat suspension
7. Vibration limiting

- **To adjust the seat cushion length:** lift lever 1 and slide the front part of the seat cushion forwards or backwards.
- **To adjust the seat backrest inclination:** rotate handwheel 2 forwards and backwards until the desired position has been reached.

- **To adjust the seat height:** pull or push lever ③ until the desired position has been reached.
- **To adjust the seat cushion inclination:** rotate handwheel ④ forwards and backwards until the desired position has been reached.
- **To adjust the seat fore-and-aft position:** lift lever ⑤ and engage the seat in the desired position.
- **To adjust the seat suspension:** take your weight off the seat.
- Set the body weight using handwheel ⑥.
- **To engage vibration limiting:** turn lever ⑦ upwards.
  The next time the seat vibrates, it will engage.
- **To release vibration limiting:** turn lever ⑦ to the right.

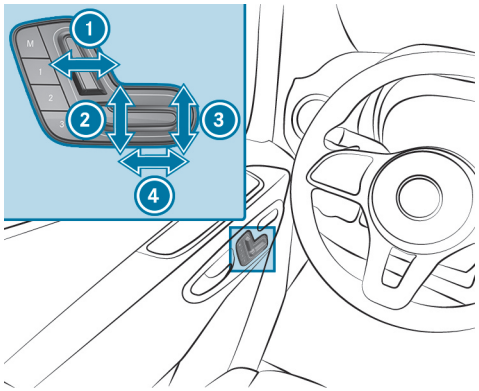

Vehicles with electric seats
① Seat backrest inclination
② Seat height
③ Seat cushion inclination
④ Seat fore-and-aft position

- Use buttons ① – ④ to adjust the seat.
- Save the settings with the memory function.

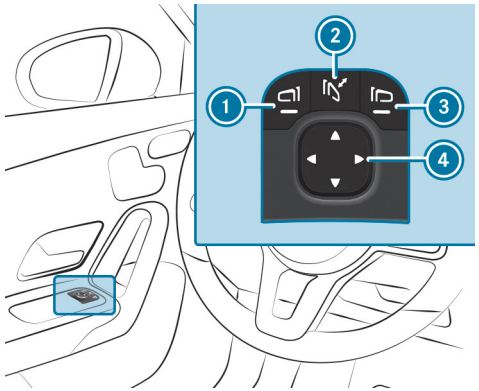

- **To fold the outside mirrors in or out:** briefly press button ②.
- **To adjust:** use button ① or ③ to select the outside mirror to be adjusted.
- Set the position of the mirror glass using button ④.

An outside mirror that has been pushed out of position can be engaged in position again as follows:

- **Vehicles without electrically folding outside mirrors:** manually move the outside mirror into the correct position.

- **Vehicles with electrically folding outside mirrors:** press and hold button ②.

  You will hear a click and the mirror will audibly engage in position. The outside mirror will be set to the correct position.

Children in the vehicle

Children in the vehicle

- Always observe these when children are in the vehicle (⟶ page 153)
- Important warning notices (⟶ page 154)
- Recommended child restraint systems (⟶ page 158).
- Approval categories for child restraint systems (⟶ page 157)
- Suitability of seats for attaching belt-secured child restraint systems (⟶ page 161).
  - Notes on rear-facing and front-facing child restraint systems on the front passenger seat (⟶ page 156)
  - Securing the child restraint system with the seat belt (⟶ page 167)

Lights, windscreen wipers and air conditioning system

Operating lights, windscreen wipers and climate control

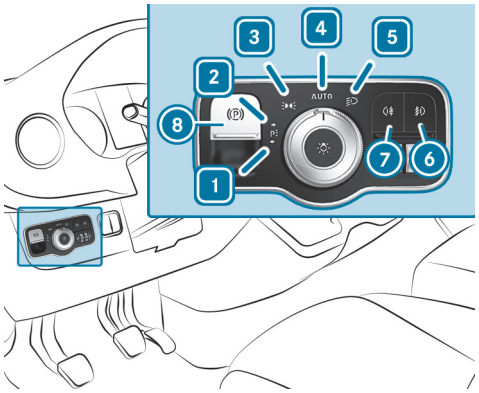

1 Left parking lights
2 Right parking lights
3 Side lights and licence plate and instrument lighting
4 AUTO Automatic driving lights/daytime running lights (preferred light switch position)
5 Low beam/high beam
6 Switches the fog lights on/off
7 Switches the rear fog light on/off
8 Electric parking brake

NOTE
Battery discharging by operating the standing lights

Do not have the standing lights switched on over a period of several hours.

► Turn the light switch to the desired position.

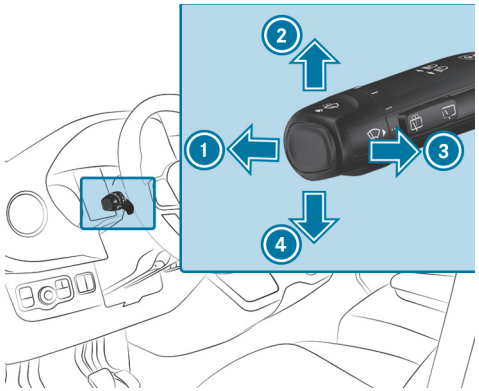

1 Switches on high beam
2 Activates the right turn signal light
3 Activates headlamp flashing
4 Activates the left turn signal light

► **To switch off the high beam:** push the combination switch forwards.

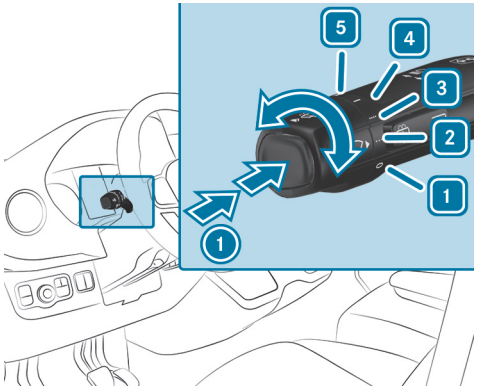

1 Single wipe/wiping with washer fluid
1 0 Windscreen wipers off
2 ••• Intermittent wiping, normal
3 •••• Intermittent wiping, frequent
4 — Continuous wiping, slow
5 = Continuous wiping, fast

► Turn the combination switch to the corresponding position 1 – 5.

Heating

1 Sets the temperature
2 Switches the rear-compartment heating on or off
3 Switches the rear window heater on or off
4 Switches footwell air distribution on or off
5 Demists the windscreen
6 Vehicles with auxiliary heating: switches auxiliary heating on or off
7 Vehicles with windscreen heaters: switches the windscreen heater on or off
8 Sets the airflow

► Choose a setting.

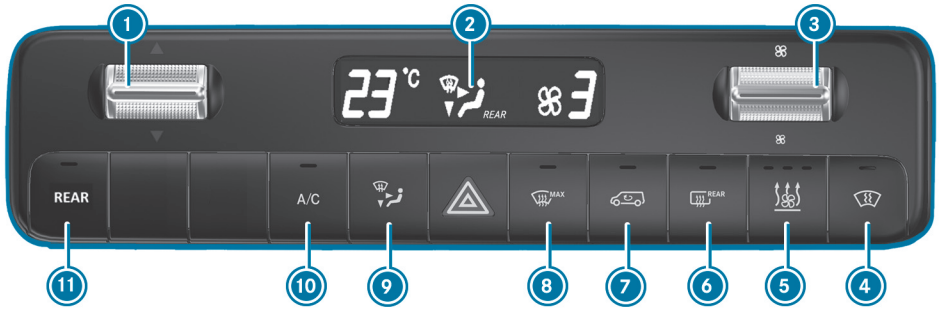

TEMPMATIC

1. ▼▲ Setting the temperature
2. Display
3. Sets the airflow
4. Switches the windscreen heater on and off
5. Vehicles with stationary heaters or booster heaters: switches the stationary heater or booster heater on/off
6. Switches the rear window heater on or off
7. Switches air-recirculation mode on/off
8. Demists the windscreen
9. Sets the air distribution
10. A/C Switches the A/C function on/off
11. Vehicles with dual-zone climate control system: sets the climate control in the rear compartment

► Choose a setting.

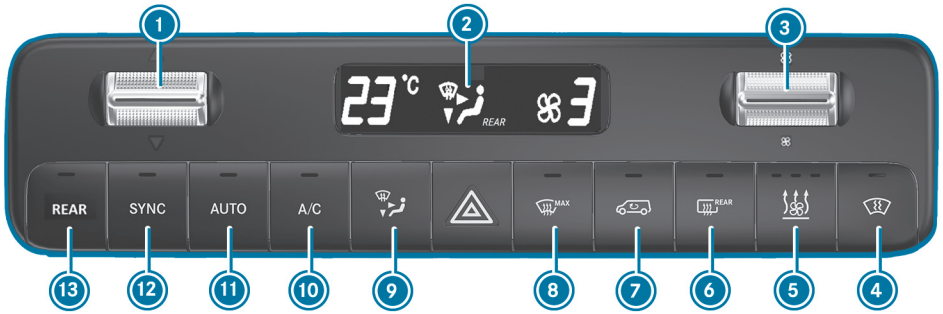

THERMOTRONIC

1. Sets the temperature
2. Display
3. Sets the airflow
4. Switches the windscreen heater on and off
5. Vehicles with stationary heaters or booster heaters: switches the stationary heater or booster heater on/off
6. Switches the rear window heater on or off
7. Switches air-recirculation mode on/off
8. Demists the windscreen
9. Sets the air distribution
10. A/C Switches the A/C function on/off
11. AUTO Automatically regulates climate control
12. SYNC Activates/deactivates synchronisation
13. Vehicles with dual-zone climate control system: switches climate control in the rear compartment on or off

► Choose a setting.

Radio

Operating Radio

▶ **To switch to radio:**
- Briefly press [⌂] in the multimedia system display.
- Tap on [ ].

▶ **To set the frequency band:**
- Briefly press [⌂] on the multimedia system display.
- Tap on [ ].
- Select a frequency band or a favourite.

▶ **To set a radio station:**
- Briefly press [⌂] on the multimedia system display.
- Tap on [ ].
- Swipe to the left or right on the control element or select a radio station.

▶ **To call up the radio station list:**
- Briefly press [⌂] on the multimedia system display.
- Tap on [ ].
- Select [ ].

▶ **To search for radio stations using station names or frequency entry:**
- Briefly press [⌂] on the multimedia system display.
- Tap on [ ].
- Select [ ].
- Enter a station name or frequency.
- Select a station.

▶ **To store radio stations:**
- Briefly press [⌂] on the multimedia system display.
- Tap on [ ].
- Select [☆].

▶ **To set the traffic information service volume increase:**
- Briefly press [⌂] on the multimedia system display.
- Tap on [⚙].
- Select System.
- Select Audio.
- Select Navigation & traffic announcements.
- Set a value for Traffic announc. vol. increase.

Wi-Fi hotspot

Setting up a Wi-Fi hotspot

GENERALLY, TWO TYPES OF WI-FI CONNECTION ARE AVAILABLE:

- Using the multimedia system as a Wi-Fi hotspot

  The multimedia system serves as a Wi-Fi hotspot for mobile communication devices such as a smartphone or tablet PC.

  The data volume of the vehicle or an already connected tethering device is used for the data connection.

  Data volume must be purchased for a fee via the Mercedes-Benz Portal.

  The use of the vehicle data tariff by external devices is not available in all countries.
- Using a mobile communication device as a Wi-Fi hotspot (tethering)

  An external Wi-Fi hotspot is accessed for the Internet connection of the multimedia system.

  The data tariff of the mobile communication device via Data package is used for the data connection.

OPTIONS FOR SETTING UP A CONNECTION:

- QR code

  The connection is set up by scanning the QR code shown on the multimedia system.
- NFC

  The connection is set up by placing the mobile communication device in the NFC interface of the vehicle.
- Security key

  The connection is established by entering the security key displayed on the multimedia system.

Connecting a mobile phone

Connecting a mobile phone

▶ **Activating Bluetooth®:**

- Make sure that the mobile phone Bluetooth® is switched on.
- Tap on [⌂] the central display or media display.
- Select Settings.
- Select System.
- Select Internet and Bluetooth.
- Activate Bluetooth®.

▶ **Searching for a mobile phone:**

- Tap on [⌂] the central display or media display.
- Select Phone.
- Select [⚙].
- Select Devices.
- Select Devices.
- Select Connect new device.

▶ **Authorising a mobile phone:**

- Select a mobile phone.

A code is displayed in the multimedia system and on the mobile phone.

▶ If the codes match, confirm the code on the mobile phone.

MBUX Voice Assistant

Operating the MBUX Voice Assistant

YOU CAN USE THE MBUX VOICE ASSISTANT TO OPERATE THE FOLLOWING FUNCTIONS DEPENDING ON THE VEHICLE EQUIPMENT:

- Telephone
- Text message and e-mail
- Navigation
- Radio and media
- Vehicle functions
- Online functions

EXAMPLES OF POSSIBLE VOICE COMMANDS:

- To operate the phone: Call my father.
- To manage e-mails: Show me my new e-mails.
- To operate the navigation: Search for an Asian restaurant, but not Japanese, in South London.
- To operate the radio: Which station am I currently listening to?
- To operate media: Play a similar track.
- To operate climate control: My feet are cold.
- To operate vehicle functions: Open the window.
- To call up the weather: Will it be sunny tomorrow?
- To ask a general knowledge question: Who painted the picture "The Scream"?

Driving and driving safety systems

Overview of driving systems and driving safety systems

THE FOLLOWING DRIVING SYSTEMS AND DRIVING SAFETY SYSTEMS ARE AVAILABLE ACCORDING TO THE RESPECTIVE VEHICLE EQUIPMENT:

- ABS (**A**nti-lock **B**raking **S**ystem) (→ page 374)
- BAS (**B**rake **A**ssist **S**ystem) (→ page 375)
- ASR (**A**nti-**S**lip **C**ontrol) (→ page 375)
- EBD (**E**lectronic **B**rakeforce **D**istribution) (→ page 378)
- ESP® (**E**lectronic **S**tability **P**rogram) (→ page 375)
- ESP® Crosswind Assist (→ page 377)
- ESP® Trailer Stability Assist (→ page 377)
- Adaptive brake lights (→ page 381)
- Active Brake Assist (→ page 378)
- WSC (**W**orking **S**peed **C**ontrol) (→ page 439)
- Hill Start Assist (→ page 405)
- HOLD function (→ page 406)
- DSR (**D**ownhill **S**peed **R**egulation) (→ page 386)
- Cruise control (→ page 382) and limiter (→ page 382)
- Active Distance Assist DISTRONIC (→ page 388)
- Speed Limit Assist (→ page 401)
- Active Lane Keeping Assist (→ page 434)
- Blind Spot Assist (→ page 429)
- Sideguard Assist(→ page 431)
- Moving-off Information Assist (→ page 433)
- ATTENTION ASSIST (→ page 420)
- Traffic Sign Assist (→ page 422)
- Drive Away Assist (→ page 426)
- Parking Assist PARKTRONIC (→ page 407)
- 360° camera (→ page 414)
- Close-range braking(→ page 427)
- Rear Cross Traffic Alert (→ page 428)

Driving Assistance Package

The following functions are part of the Driving Assistance Package. Some functions are only available depending on the respective country of use. Some functions are also available with restricted functionality without the Driving Assistance Package.

- Active Distance Assist DISTRONIC (→ page 388)
- Active Speed Limit Assist (→ page 395)
- Route-based speed adaptation (→ page 396)
- Active Steering Assist (→ page 398)
- Active Emergency Stop Assist (→ page 400)

Parking Package

Functions of the Parking Package

Depending on country-specific availability, your vehicle may be equipped with various functions to assist you with parking and manoeuvring. For this purpose, your vehicle uses cameras and ultrasonic sensors to monitor the vehicle surroundings.

Depending on the respective vehicle equipment, the following systems and functions are included with your Parking Package:

- **Reversing camera:** monitors the area behind the vehicle and shows the area in the media display (⟶ page 410).
- **360° camera:** a system comprising four cameras which cover the immediate vehicle surroundings and show them in the media display (⟶ page 414).
- **Parking Assist PARKTRONIC:** an electronic parking assistance system which monitors the area surrounding your vehicle and the distance to obstacles in the vicinity using ultrasound (⟶ page 407).

Navigation destination entry

Navigation destination entry

- ▶ Briefly press [⌂] in the multimedia system display.
- ▶ Select Navigation.
- ▶ Select [🔍].

SELECT THE FOLLOWING OPTIONS FOR DESTINATION ENTRY:

- Enter a POI, an address or a three-word address from what3words in the input line.

  Online search results for POIs (if available) may contain additional information, for example opening times and ratings. The information is provided by an online map service.

  You can find further information about three-word addresses at: http://what3words.com
- Select a destination suggestion.

  Requirements:

  The Navigation option is switched on in the user settings for Suggestions.

  The multimedia system has gathered sufficient data in order to show destination suggestions.
- Select Previous destinations.

  Select a previous destination.

  You can save the destination as a favourite .
- Select POIs.

  Select a POI category, e.g. [P] or enter a POI name or POI category in the input line.

  If search results are displayed, limit them with Filter, for example by search position or the desired travel time.
- Select Contacts.

  Requirements:

  A mobile phone is connected to the multimedia system and contacts have been downloaded.

  The contact contains a navigable address.
- Enter the geocoordinates as latitude and longitude in the input line.

  Example 1: 47°58'11"N 7°57'25"E (degrees, minutes, seconds and compass direction)

  Example 2: 47.969722 7.956944 (decimal degrees)
- Select a destination on the map .
- Select Favourites.

  Requirements:

  The destinations have been saved as favourites.
- Select Received destinations.

  Requirements:

  To receive external destinations there must be an internet connection.

  The destinations have been sent to the vehicle.

New features on the multimedia system

Information about the telephone menu

1. Bluetooth® device name of the currently connected mobile phone/the mobile phones
2. Bluetooth® device name of the other currently connected mobile phone/of the mobile phone
3. Signal strength of the mobile phone network
4. Battery status of the connected mobile phone
5. Options
6. Messages
7. Calls up my devices
8. Numerical pad
9. Starts contact search

TELEPHONE MENU OVERVIEW
Via the telephone menu you can use the functions in connection with your mobile phone.

THE FOLLOWING FUNCTIONS CAN BE USED:

- Call lists
- Contacts
- Messages
- Device manager

USING CALL LISTS
If your mobile phone supports the PBAP Bluetooth® profile, the call lists from the mobile phone are displayed in the multimedia system.

THE FOLLOWING FUNCTIONS ARE AVAILABLE:

- Making calls from the call list
- Opening contacts on the call list

MESSAGES
In the message menu you can receive text messages and create and send them with the help of the MBUX Voice Assistant. In addition, you can conveniently use the read-aloud function during the journey.

DEVICE MANAGER
In the device manager, you can connect your mobile phone with the multimedia system.

You have the option of using your mobile phone alone in single telephone mode or together with another mobile phone in two phone mode.

USING CONTACTS
If you permit the multimedia system to access the contacts in your mobile phone, you can use these in the vehicle. You can store up to 8,000 contacts.

THE FOLLOWING OPTIONS ARE AVAILABLE TO YOU VIA THE CONTACTS MENU:

- Making telephone calls (calling a contact)
- Navigating
- Composing messages with the help of the MBUX Voice Assistant
- Additional options

The contacts from your mobile phone can be downloaded automatically or manually.

CONDUCTING A CALL
When conducting a call, additional functions are available apart from making, accepting or rejecting a call. For example, you can switch between calls, conduct a call with several participants or conference calls.

It is also possible to accept or reject waiting calls. If you receive a call while already in a call, a message is displayed.

DURING A CALL YOU CAN ACTIVATE THE FOLLOWING FUNCTIONS:

- Microphone off
- Fade in the numerical pad to send DTMF tones
- Add a call
- Hands-free mode to transfer the call to the front or rear passenger compartment
- Privacy mode to transfer the call to the telephone or headphones

Information about navigation

DIGITAL MAP AND USER-SPECIFIC APPLICATIONS

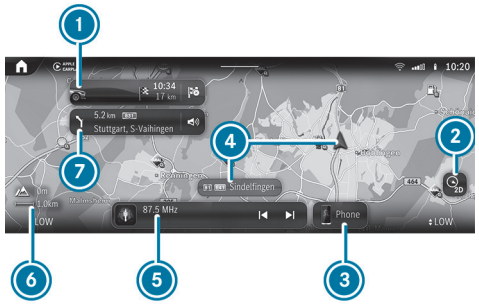

1. Navigation module (reduced view)
   Route guidance active:
   The navigation module shows the information relevant to the route in the zoomed-out view, e.g. the destination or a traffic delay
   [⊗] Ends the current route guidance
   Tapping opens the navigation module and displays the route overview
2. Sets map orientation [⊘] and map type
3. Calls up the telephone menu
4. Current vehicle position (vehicle symbol or arrow)
5. Calls up entertainment applications
6. Elevation and map scale
7. Navigation window shows the next driving manoeuvre (zoomed out view) or the route monitor (zoomed in view)
   Route guidance active: route monitor shows, e.g. route sections, upcoming driving manoeuvres with lane recommendations, destination, traffic delays, 3D images at motorway exits, online content

NAVIGATION MODULE (EXPANDED VIEW)

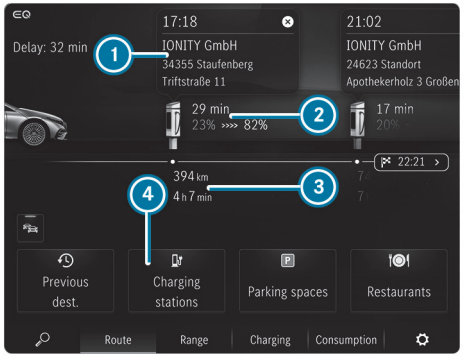

1. Arrival time at charging stop, type of charging station
2. Charging stop shows the charging time recommended by the Navigation with Electric Intelligence as well as states of charge on arrival and onward journey for an optimal travel time
3. Distance from current vehicle position and remaining driving time
4. Searches for an additional charging station

The navigation system offers many options for destination entry, route planning and route guidance. The traffic situation is taken into account during route guidance. When using route guidance with augmented reality, additional information can be shown in a camera image before a turning manoeuvre. Services and apps help you reach the destination quickly, safely and in comfort.

You start the destination entry with [ ] or in the home screen using the [ ] quick-access beneath the application. You can enter the POI, address or contact as the destination on-board or search online using a map service. Or you select a previous destination. The destination can be stored here as a favourite or be saved as an address for home and work. If the Allow destination suggestions option is active, destination suggestions are available. These are determined based on your driving habits and offer a convenient selection of destinations. If external destinations and routes are received from apps or services, these are also available.

A destination can be shared by scanning it using the displayed QR code.

THE FOLLOWING OPTIONS ARE AVAILABLE FOR ROUTE PLANNING, FOR EXAMPLE:

- Route options:
  e.g. avoid or use toll roads, tunnels, unpaved roads or areas
- Intermediate destinations
- Alternative routes
- Commuter route
- Automatic service station search

You can record and save routes then select or share them with a USB device.

Lane recommendations are shown during route guidance on multi-lane roads. When driving on a motorway, service facilities on the route ahead can be shown and used for route guidance.

The Live Traffic Information service takes the current traffic situation into account. The map can show the current traffic flow, incidents or warning messages, e.g. the tail end of a traffic jam in a dangerous position.

Hazardous situations on public roads are detected automatically by the vehicle via Car-to-X-Communication or these can be reported by the driver. The early warning makes it possible to adapt your driving characteristics in good time. Broken-down vehicles, accidents, weather hazards or a deployed hazard warning light are shown on the map.

The map shows map data from the database or content from an online map service. In small map scales, buildings are shown as realistic images.

Weather information and data from other services can be integrated in the map. Multi-storey car parks with the corresponding equipment deliver data about the current occupancy and parking fees, for example. The online map update service makes possible the updating of the map data.

The options offered vary depending on the country, vehicle equipment and available services.

Information on radio

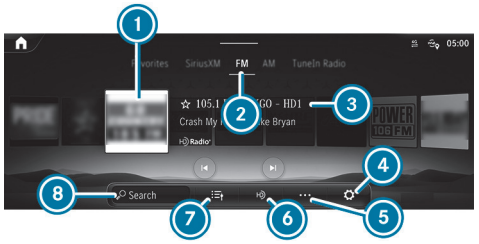

1. Preview picture
2. Active frequency band
3. Station name or set frequency
4. Settings
5. Options
6. Switches HD Radio™ on/off
7. Station list
8. Search

Using the radio menu you can play a multitude of radio stations and use the Internet Radio TuneIn. Search for your preferred stations and save these as favourites or in station lists.

> ⓘ The function of TuneIn Internet radio is country-dependent.

Radio text: this function shows you the station name, the track and the artist for the song currently playing, for example.

Information on media

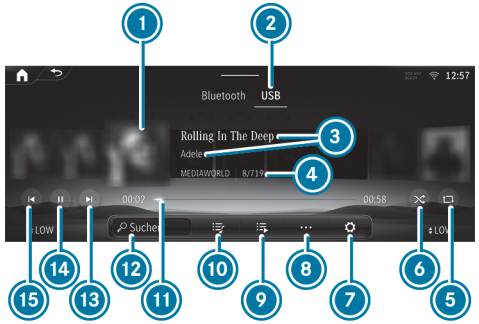

1. Album cover
2. Active media source
3. Track and artist
4. Active data storage medium and current track number/track in playback list
5. Repeat
6. Random playback
7. Settings
8. Additional options
9. Additional categories
10. Playlists and categories
11. Timeline
12. Media search
13. Next track or fast forward

⑭ Controls playback
⑮ Previous track or fast rewind

Using the Media application, you can set and use the audio and video recording functions of your multimedia system. You can listen to music or look at videos, for example.

USB: Using the USBmenu, you can play back your own audio or video data from a data storage medium connected by USB.

Bluetooth®: using the Bluetooth menu, you can connect a Bluetooth® audio device with the multimedia system and play back the available tracks on the audio device. Connecting the device can be conveniently handled in the device manager, so you can complete all settings with just a few clicks.

Online music: the Online music menu allows you to access music streaming services.

Information about smartphone integration

Using the Smartphone Integration menu, various applications are available that can bring the functions of your mobile phone to the multimedia system display. Operation can by carried out via the touchscreen or voice control, for example.

Only one mobile phone at a time can be connected via Smartphone Integration to the multimedia system. Also for use with two phone mode with smartphone integration, only one additional mobile phone can be connected using Bluetooth® with the multimedia system.

Use Android Auto for mobile phones with the Android operating system and use Apple CarPlay® with your iPhone®. The full functionality of Android Auto and Apple CarPlay® is only possible with an Internet connection.

Information about vehicle info

Using the Info menu you can have important information about your vehicle shown. This gives you an overview of, for example, vehicle data or current consumption values at a glance. In addition, you can call up the Digital Owner's Manual via the Owner's Manual menu item (→ page 103).

VEHICLE DATA

THE FOLLOWING DATA WILL BE SHOWN, FOR EXAMPLE:

- Activity of the acceleration and brake pedal
- Activity of the suspension strut
- Wheel angle
- G-forces for the linear and lateral acceleration.

ENGINE DATA

THE FOLLOWING DATA IS SHOWN:

- Transmission oil temperature
- Engine/coolant temperature
- Performance
- Torque
- On-board electrical system voltage
- Boost pressure

CONSUMPTION VALUES

Depending on your driving style, this display shows you the current and average consumption of the vehicle. Together with the displays of vehicle data, you can adapt your driving style to be as efficient and economical as possible.

Information on MB Apps/Digital Extras

VARIOUS SERVICES AND ONLINE FUNCTIONS ARE AVAILABLE VIA THE MB APPS MENU:

- Managing Digital Extras
- Using the dashcam
- Using the web browser to surf the Internet

You require a Mercedes me ID user account, and have to connect your vehicle with the user account, in order to be able to use offers and services.

> ⓘ If the Mercedes-Benz App is available on a mobile phone, the vehicle link can be made via the displayed QR code.

Please not that the available features are country-dependent.

Information on settings

In Settings you can set the basic configuration for your multimedia system and the vehicle. You have access to all functions in this menu, from switching the driver assistance systems on and off to display and language settings.

THE SETTINGS ARE STRUCTURED IN THE FOLLOWING MENUS:

- Assistance
- Vehicle
- Lights
- System

ASSISTANCE MENU

With the Assistance menu you have direct access to the driver assistance systems which are installed in your vehicle and can either switch these on or off, or configure them according to your wishes.

VEHICLE MENU

HERE YOU CAN ACTIVATE THE FOLLOWING FUNCTIONS, FOR EXAMPLE:

- Automatic folding in of the outside mirrors when parking the vehicle
- Automatic adjustment of the seat and steering wheel, for comfortable entry and exit from the vehicle
- Automatic activation of the 360° camera when selecting reverse gear

LIGHTS MENU

All the light settings can be made in the Lights menu. You can activate or deactivate the Intelligent Light System here, set the duration for which your vehicle should remain lit after parking or unlocking, or switch the function off.

SYSTEM MENU

All important settings for the multimedia system can be made in the System menu.

YOU CAN CARRY OUT THE FOLLOWING SETTINGS, FOR EXAMPLE:

- Setting the system language
- The configuration of Wi-Fi and Bluetooth®
- Setting of time and date

At the filling station

Starting an automatic filling station search

Requirements:

- The automatic filling station search is activated (→ page 533) .

DRIVING SITUATION
The fuel level in the fuel tank reaches the reserve fuel level.

The following notification is shown in the media display: Tap here to search for filling stations.

- ▶ Confirm the notification.
  The automatic filling station search begins. The available filling stations along the route or in the vicinity of the vehicle's current position are displayed.

or

- ▶ Hide the notification via ⊗.
- ▶ Select a filling station.
  The address of the filling station is displayed.
- ▶ Calculate the route (→ page 525).
  The filling station is set as the destination or the next intermediate destination.
- ▶ **If there are already four intermediate destinations:** select Yes in the prompt.
  The filling station is entered in the route overview. Intermediate destination 4 is deleted. Route guidance begins.

Refuelling the vehicle

⚠ **WARNING**
Risk of fire or explosion from fuel

Fuels are highly flammable.

- ▶ Fire, naked flames, smoking and creating sparks must be avoided.
- ▶ Before refuelling, switch off the vehicle and, if fitted, the stationary heater and keep switched off during filling.

WARNING
Risk of injury from fuels

Fuels are poisonous and hazardous to your health.

- Do not swallow fuel or let it come into contact with skin, eyes or clothing.
- Do not inhale fuel vapour.
- Keep children away from fuel.
- Keep doors and windows closed during the refuelling process.

If you or other people come into contact with fuel, observe the following:

- Immediately rinse fuel off your skin with soap and water.
- If fuel comes into contact with your eyes, immediately rinse them thoroughly with clean water. Seek medical attention immediately.
- If you swallow fuel, seek medical attention immediately. Do not induce vomiting.
- Change immediately out of clothing that has come into contact with fuel.

WARNING
Risk of fire and explosion due to electrostatic charge

Electrostatic charge can ignite fuel vapour.

- Before you open the fuel filler cap or take hold of the pump nozzle, touch the metallic vehicle body.
- To avoid creating another electrostatic charge, do not get into the vehicle again during the refuelling process.

WARNING
Risk of fire from fuel mixture

Vehicles with a diesel engine:

If you mix diesel fuel with petrol, the flash point of the fuel mixture is lower than that of pure diesel fuel.

While the vehicle is running, component parts in the exhaust system may overheat without warning.

- Never refuel using petrol.
- Never mix petrol with diesel fuel.

NOTE
Do not refuel diesel-engined vehicles with petrol

IF YOU HAVE ACCIDENTALLY REFUELLED WITH THE WRONG FUEL:

- Do not switch on the vehicle. Otherwise fuel can enter the engine. Even small amounts of the wrong fuel could result in damage to the fuel system and the engine. The repair costs are high.

► Consult a qualified specialist workshop.

► Have the fuel tank and fuel lines drained completely.

NOTE
Damage to the fuel system caused by overfilled fuel tanks

► Only fill the fuel tank until the pump nozzle switches off.

NOTE
Damage to the fuel system if the fuel level is too low or there is no fuel

► Do not let the fuel level to fall below 5 l while the vehicle is in use.

► If the tank is completely empty, refuel according to the instructions in this section.

NOTE
Damage to painted surfaces due to fuel

► Do not spill any fuel on painted surfaces.

ENVIRONMENTAL NOTE
Environmental damage due to improper handling of fuel

If fuels are handled improperly, they pose a danger to persons and the environment.

► Do not allow fuels to run into the sewage system, the surface waters, the ground water or into the ground.

Requirements:

- The vehicle is unlocked.
- The auxiliary heating is switched off.
- The vehicle is switched off.
- The left front door is open.

ⓘ Do not get back into the vehicle during the refuelling process. You might build up an electrostatic charge again.

Observe the notes on operating fluids (→ page 741).

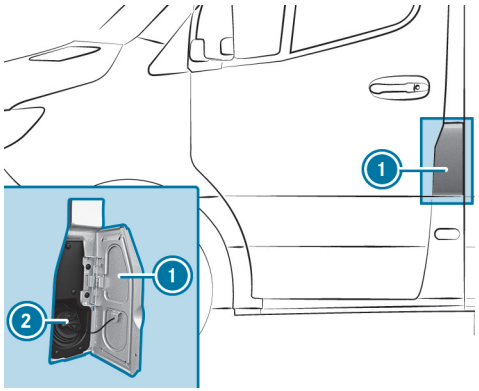

1 Fuel filler flap
2 Fuel filler cap

ⓘ The fuel filler flap is beside the left front door when viewed in the direction of travel. The position of the fuel filler cap is also shown in the instrument cluster . The arrow on the filling pump specifies the side of the vehicle.

- Open fuel filler flap 1.
- Turn fuel filler cap 2 anti-clockwise and remove it.
- Close all vehicle doors to prevent fuel vapours from entering the vehicle interior.
- Slide the filler neck of the pump nozzle fully into the tank, hook in place and refuel.
- Fill the fuel tank only until the pump nozzle switches off.
- Replace fuel filler cap 2 and turn it clockwise.
  You will hear a click when the fuel filler cap is closed fully.
- Open the left front door.
- Close fuel filler flap 1.

ⓘ **Vehicles with an incorrect fuelling protector to prevent incorrect fuelling with petrol:** the filler neck is designed for refuelling at diesel filling pumps for cars.

ⓘ **Vehicles without an incorrect fuelling protector:** refuel at a diesel filling pump for cars if possible. However, you can also refuel at a diesel filling pump for trucks.

ⓘ If the fuel tank has been run completely dry, top up with at least 5 l of fuel.

Resetting values on the trip menu of the on-board computer

On-board computer:

→ Trip

ⓘ The wording of the displayed main menu may differ. Therefore, pay attention to the menu overview for the instrument cluster (→ page 452).

YOU CAN RESET THE VALUES OF THE FOLLOWING FUNCTIONS:

- Trip distance:
  - Reset odometer?
- Trip computer:
  - From start
  - From reset
- ECO display

▶ Select the function for which the value is to be reset and confirm this selection.

▶ Confirm the Reset values? prompt with Yes.

Checking the tyre pressure with the tyre pressure monitoring system

Requirements:

- The vehicle is switched on.

Instrument cluster:

Service ▶▶ Tyres

ONE OF THE FOLLOWING DISPLAYS APPEARS:

- Current tyre pressure and tyre temperature of the individual wheels

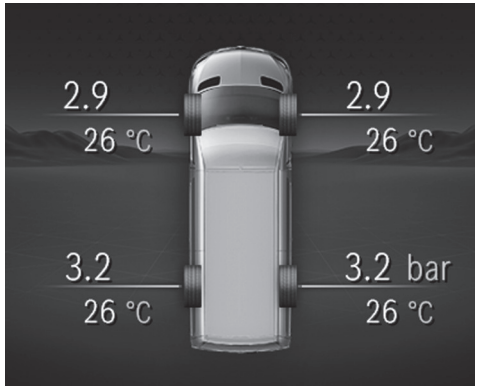

Instrument cluster display

- Tyre pressures will be displayed after a few minutes of driving: The teach-in process of the system is not yet complete. The tyre pressures are already being monitored.

▶ Compare the tyre pressure with the recommended tyre pressure for the current operating status (⟶ page 678). Observe the notes on tyre temperature (⟶ page 677).

ⓘ The values displayed on the instrument cluster may deviate from those of the tyre pressure gauge, as they refer to sea level. At high altitudes, the tyre pressure values indicated by a pressure gauge are higher than those shown in the instrument cluster. If this is the case, do not reduce the tyre pressures.

REFER ALSO TO THE FOLLOWING RELATED TOPIC:

- Notes on tyre pressure (⟶ page 677)

Topping up AdBlue®

NOTE
Engine damage due to AdBlue® being in the fuel

- AdBlue® must not be used to fill the fuel tank.
- Only use AdBlue® to fill the AdBlue® tank.
- Do not overfill the AdBlue® tank.

NOTE
Contamination of the vehicle interior due to AdBlue® leakage

- After topping up, carefully close the AdBlue® refill container.
- Avoid carrying AdBlue® refill containers permanently in the vehicle.

Requirements

- The vehicle is switched off.

VEHICLES WITH PASSENGER VEHICLE APPROVAL: THE FOLLOWING MESSAGES THAT APPEAR IN SUCCESSION ON THE INSTRUMENT CLUSTER DISPLAY INDICATE THAT YOU NEED TO TOP UP THE ADBLUE® TANK:

- Top up AdBlue See Owner's Manual

  The AdBlue® container level has dropped to the reserve level.
- Top up AdBlue Limp mode in XXX km See Owner's Manual

  You will only be able to drive the vehicle for the distance shown. Top up AdBlue® as soon as possible.
- Top up XX,X l AdBlue Limp mode: max. XXX km/h No start in XXX km

  The vehicle speed is limited to approximately 20 km/h. You will only be able to drive the vehicle for the distance shown. After that, it will no longer be possible to start the vehicle.
- Top up AdBlue Engine start not possible

  The vehicle can no longer be started.

VEHICLES WITH COMMERCIAL VEHICLE APPROVAL: THE FOLLOWING MESSAGES THAT APPEAR IN SUCCESSION ON THE INSTRUMENT CLUSTER DISPLAY INDICATE THAT YOU NEED TO TOP UP THE ADBLUE® TANK:

- Top up AdBlue See Owner's Manual

  The AdBlue® container level has dropped to the reserve level.
- Top up AdBlue Performance reduced
- Top up AdBlue Limp-home mode after restart: max. XXX km/h

  The vehicle cannot be driven at a speed exceeding 20 km/h after the vehicle has been restarted.
- Top up AdBlue Limp-home mode: max. XXX km/h

  The vehicle cannot be driven at a speed exceeding 20 km/h.

TOP-UP QUANTITY:

With a prompt on the display	min. 8 l
Without a prompt on the display	min. 2 l

You can also have the AdBlue® level displayed (→ page 356).

OPENING THE ADBLUE® FUEL FILLER CAP

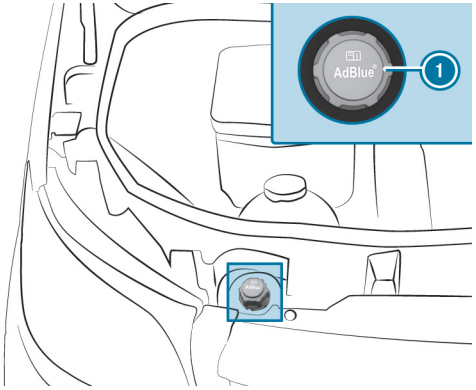

- Open the bonnet.
- Turn AdBlue® filler cap (1) anti-clockwise and remove it.

PREPARING THE ADBLUE® REFILL CANISTER

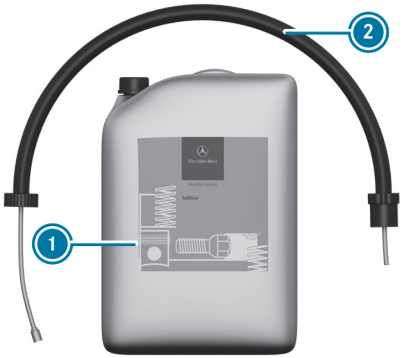

Variant 1

Variant 2

- Unscrew the cap on AdBlue® refill canister (1).
- Screw disposable hose (2) onto the opening of AdBlue® refill canister (1) until hand-tight.

TOPPING UP ADBLUE®

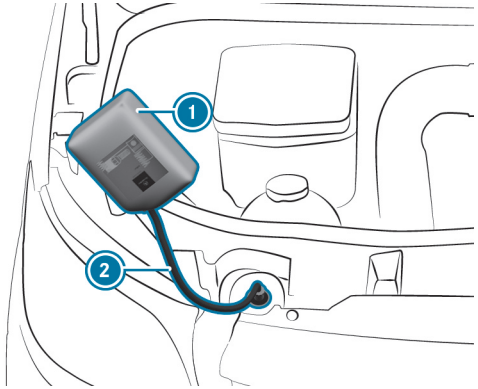

Variant 1

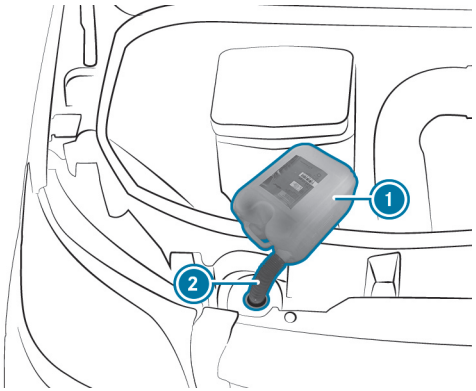

Variant 2

- Screw on hand-tight (variant 1) or insert (variant 2) disposable hose (2) into the filler neck of the vehicle.
- Lift up and tip AdBlue® refill canister (1).

  The filling process stops when the AdBlue® container is completely full.

  AdBlue® refill canister (1) can be removed when it has been only partially emptied.
- Unscrew disposable hose (2) and close AdBlue® and refill canister (1) in reverse order.
- Switch on the vehicle for at least 60 seconds.
- Start the vehicle.

ⓘ Avoid carrying AdBlue® refill containers permanently in the vehicle.

ADBLUE® REFILL BOTTLE

Only screw the AdBlue® refill bottle hand-tight onto the filler opening in the engine compartment. It may otherwise be damaged.

AdBlue® refill bottles (1) can be obtained at many filling stations or at a qualified specialist workshop. Refill bottles without a threaded cap offer no overfill protection. AdBlue® may leak out as a result of overfilling. Mercedes-Benz offers special refill bottles with a threaded cap. You can obtain these from a Mercedes-Benz Service Centre.

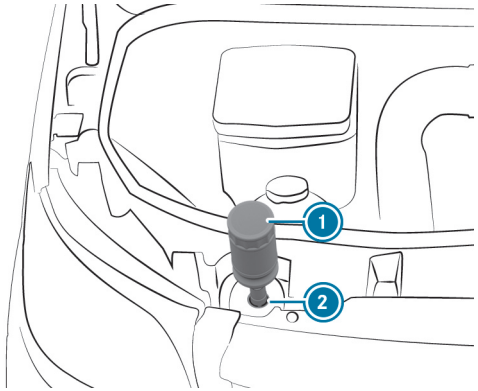

- Unscrew the protective cap from AdBlue® refill bottle (1).
- Place AdBlue® refill bottle (1) as shown on filler opening (2) and screw it on clockwise until hand-tight.
- Press AdBlue® refill bottle (1) towards filler opening (2).

  The AdBlue® tank is filled. This could take up to one minute.

> ⓘ When the AdBlue® refill bottle is no longer pressed down, filling stops. The bottle can be removed when it has been only partially emptied.

- Let go of AdBlue® refill bottle (1).
- Turn AdBlue® refill bottle (1) anti-clockwise and remove it.
- Screw the protective cap onto AdBlue® refill bottle (1) again.

FILLING PROCEDURE WITH THE PUMP NOZZLE OF AN ADBLUE® FILLING PUMP

- Insert the pump nozzle into the filler neck and top up with AdBlue®. When doing so, do not overfill the AdBlue® tank. You can also use an AdBlue® filling pump for trucks.

CLOSING THE ADBLUE® FUEL FILLER CAP

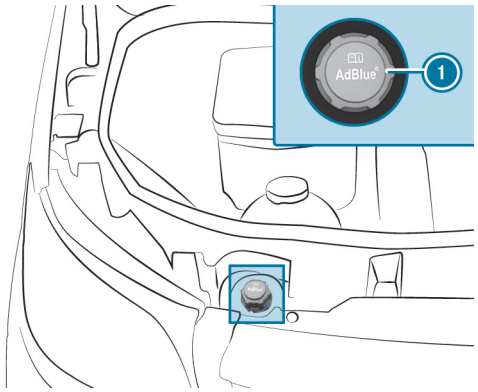

- After filling the AdBlue® tank, place AdBlue® filler cap (1) on the filler neck and tighten by turning it clockwise.
- Turn the AdBlue® fuel filler cap until the lettering is horizontal and can be read.

  The filler neck is only locked correctly when this is the case.
- Close the bonnet.

Topping up the windscreen washer system

WARNING
Risk of burns when opening the bonnet

IF YOU OPEN THE BONNET IN THE EVENT OF AN OVERHEATED ENGINE OR FIRE IN THE ENGINE COMPARTMENT, THE FOLLOWING SITUATIONS MAY OCCUR:

- You may come into contact with hot gases.
- You may come into contact with other escaping hot operating fluids.

► Before opening the bonnet, allow the engine to cool down.

► In the event of a fire in the engine compartment, keep the bonnet closed and call the fire service.

WARNING
Risk of injury due to moving parts

Components in the engine compartment can continue to run or start unexpectedly even when the ignition is switched off.

Observe the following before performing tasks in the engine compartment:

► Switch off the ignition.

► Never touch the danger zone surrounding moving components, e.g. the rotation area of the fan.

► Remove jewellery and watches.

► Keep items of clothing and hair away from moving parts.

WARNING
- Risk of fire and injury due to windscreen washer concentrate

Windscreen washer concentrate is highly flammable. It could ignite if it comes into contact with hot engine component parts or the exhaust system.

► Make sure that no windscreen washer concentrate spills out next to the filler opening.

WARNING
Risk of burns from hot component parts in the engine compartment

Certain component parts in the engine compartment can be very hot, e.g. the engine, the cooler and parts of the exhaust system.

- Allow the engine to cool down and only touch component parts described in the following.

IF YOU HAVE TO CARRY OUT ANY WORK IN THE ENGINE COMPARTMENT, TOUCH ONLY THE FOLLOWING COMPONENT PARTS:

- Bonnet
- Engine oil filler opening cap
- Washer fluid reservoir cap
- Coolant expansion reservoir cap

NOTE
Damage to the exterior lighting due to unsuitable windscreen washer fluid

Unsuitable windscreen washer fluids may damage the plastic surface of the exterior lighting.

- Only use windscreen washer fluids that are also suitable for use on plastic surfaces, e.g. MB SummerFit or MB WinterFit.

TOPPING UP THE WASHER FLUID

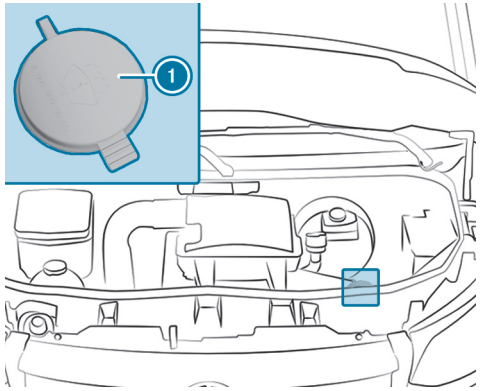

Washer fluid reservoir (example)

- Pre-mix the washer fluid in the correct mixing ratio in a container.
- Park the vehicle on a level surface and secure it against rolling away (→ page 361).
- Open the bonnet (→ page 606).
- Pull the cap (1) of the washer fluid reservoir upwards by the tab.
- Pour in the pre-mixed washer fluid.
- Push the cap (1) onto the filler opening until it audibly engages.
- Close the bonnet (→ page 606).

Replacing the windscreen wiper blades

WARNING
Risk of becoming trapped if the windscreen wipers are switched on while wiper blades are being replaced

If the windscreen wipers begin to move while you are changing the wiper blades, you can be trapped by the wiper arm.

- Always switch off the windscreen wipers and vehicle before changing the wiper blades.

WARNING
Risk of injury from using the windscreen wipers when the bonnet is open

If the windscreen wipers start moving when the bonnet is open, you could be trapped by the wiper linkage.

- Always switch off the windscreen wipers and vehicle before opening the engine bonnet.

Replacing the wiper blades

If the wiper blades are worn out, they will no longer wipe the windscreen properly. Replace the wiper blades twice a year, preferably in spring and autumn.

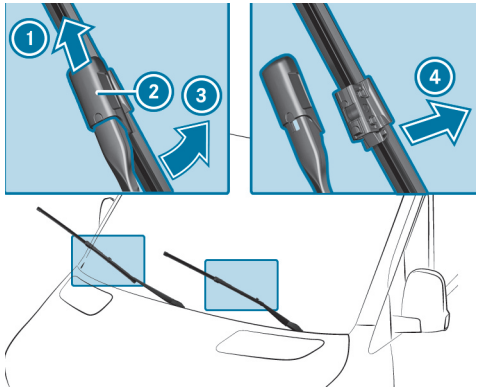

- Fold the wiper arm away from the windscreen.
- Hold wiper arm and fold the wiper blade away from wiper arm in the direction of arrow 3 as far as it will go.
- Slide catch 2 upwards in the direction of arrow 1 until it engages.
- Fold the wiper blade back onto the wiper arm.
- Remove the wiper blade from the wiper arm in the direction of arrow 4.
- Insert new wiper blade in the holder on wiper arm.

WHEN DOING SO, TAKE INTO ACCOUNT THE DIFFERENT LENGTHS OF THE WIPER BLADES:

- Driver's side: long wiper blade
- Front passenger side: short wiper blade

- Slide catch 2 downwards until it engages.
- Fold wiper arm back onto the windscreen.

Replacing the windscreen wiper blades (WET WIPER SYSTEM)

WARNING
Risk of becoming trapped if the windscreen wipers are switched on while wiper blades are being replaced

If the windscreen wipers begin to move while you are changing the wiper blades, you can be trapped by the wiper arm.

- Always switch off the windscreen wipers and vehicle before changing the wiper blades.

WARNING
Risk of injury from using the windscreen wipers when the bonnet is open

If the windscreen wipers start moving when the bonnet is open, you could be trapped by the wiper linkage.

- Always switch off the windscreen wipers and vehicle before opening the engine bonnet.

Replacing the wiper blades

If the wiper blades are worn out, they will no longer wipe the windscreen properly. Replace the wiper blades twice a year, preferably in spring and autumn.

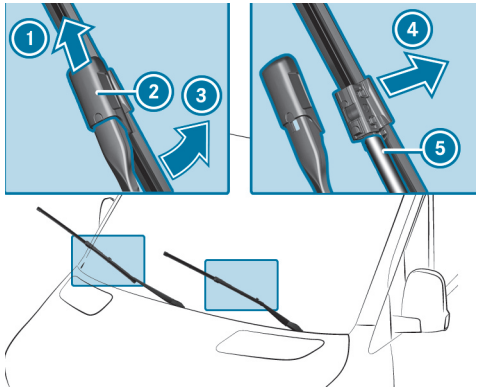

- Fold the wiper arm away from the windscreen.
- Hold the wiper arm and turn the wiper blade away from the wiper arm in the direction indicated by the arrow 3 as far as it will go.
- Slide the catch 2 upwards in the direction indicated by the arrow 1 until it engages.
- Remove the wiper blade from the wiper arm in the direction indicated by the arrow 4.
- Carefully remove the hose 5 from the wiper blade.
- Attach the hose 5 to the new wiper blade.
- Insert the new wiper blade into the holder on the wiper arm.

WHEN DOING SO, TAKE INTO ACCOUNT THE DIFFERENT LENGTHS OF THE WIPER BLADES:

- Driver's side: long wiper blade
- Front passenger side: short wiper blade

- Slide the catch ② downwards until it engages.
- Fold the wiper blade back onto the wiper arm.
- Fold the wiper arm back onto the windscreen.

Checking the engine oil level with the on-board computer

Requirements

- The vehicle is level during the measuring process.
- The bonnet is closed.
- Depending on the driving profile, the oil level can be displayed only after a driving time of up to 30 minutes and only when the vehicle is switched on.

On-board computer:

Service ▶▶ Engine oil level

ONE OF THE FOLLOWING MESSAGES APPEARS ON THE INSTRUMENT CLUSTER:

- Engine oil level Measuring now...: it is not yet possible to display the oil level. Repeat the query after driving for a maximum of 30 minutes.
- Engine oil level OK and the bar indicating the oil level on the instrument cluster is green and is between "min." and "max.": the oil level is correct.
- Engine oil level Drive until engine is warm: warm up the engine to operating temperature.
- Engine oil level Correct measurement only if vehicle is on level ground: park the vehicle on a level surface.
- Engine oil level Top up 1,0 l and the bar indicating the oil level on the instrument cluster is orange and is below "MIN": add 1 l of engine oil.
- Reduce engine oil level and the bar indicating the oil level on the instrument cluster is orange and is above "MAX": drain off excess engine oil. Consult a qualified specialist workshop.
- For engine oil level, switch on vehicle: switch on the vehicle.
- Engine oil level System inoperative: the sensor is defective or not connected. Consult a qualified specialist workshop.
- Engine oil level System currently unavailable: close the bonnet.

ⓘ **Vehicles with cold oil level display:** the oil level will automatically be displayed on the instrument cluster after the vehicle has been non-operational for an extended period. If it is not possible to measure the engine oil level, a corresponding message is relayed.

ⓘ The result of the electronic measurement always takes precedence over other measurements.

Information on washing the vehicle in an automatic car wash

WARNING
Risk of an accident due to reduced braking power after washing the vehicle

Braking efficiency is reduced after washing the vehicle.

- ► After the vehicle has been washed, brake carefully while paying attention to the traffic conditions until braking power has been fully restored.

NOTE
Damage to the vehicle due to automatic braking

IF ONE OF THE FOLLOWING FUNCTIONS IS ACTIVATED, THE VEHICLE WILL BRAKE AUTOMATICALLY IN CERTAIN SITUATIONS:

- Active Brake Assist
- Active Distance Assist DISTRONIC
- HOLD function

To avoid damage to the vehicle, deactivate these systems in the following or similar situations:

- ► When towing
- ► In a car wash

NOTE
Damage due to unsuitable car wash

- ► Before driving into a car wash make sure that the car wash is suitable for the vehicle dimensions.
- ► Ensure there is sufficient ground clearance between the underbody and the guide rails of the car wash.
- ► Ensure that the clearance width of the car wash, in particular the width of the guide rails, is sufficient.

TO AVOID DAMAGE TO YOUR VEHICLE, OBSERVE THE FOLLOWING BEFORE USING AN AUTOMATIC CAR WASH:

- The car wash is suitable for the size of the vehicle.
- Active Brake Assist is deactivated.
- Active Distance Assist DISTRONIC is deactivated.
- The HOLD function is switched off.
- The side windows and the sliding window are completely closed.
- The outside mirrors are folded in and any additional antenna is removed.
- The blower for ventilation and heating is switched off.
- The windscreen wiper switch is in position 0.

If the vehicle is extremely dirty, wash off excess dirt before cleaning the vehicle in an automatic car wash.

AFTER LEAVING THE CAR WASH, PAY ATTENTION TO THE FOLLOWING:

- The outside mirrors are fully folded out again and any additional antenna is mounted again.

- Remove wax residues on the windscreen and wiper rubbers to prevent smearing and reduce wiper noise.

Remove wax residues from the camera lens in vehicles with a reversing camera (→ page 624).

Holiday preparations

Notes on adjusting the lights when driving abroad

Vehicles with halogen or static LED headlamps: Changing the headlamps is not necessary. The legal requirements will also be fulfilled in countries with left- and right-hand traffic.

Notes on regularly inspecting wheels and tyres

WARNING
Risk of injury due to damaged tyres

Damaged tyres can cause tyre pressure loss.

► Check the tyres regularly for signs of damage and replace any damaged tyres immediately.

Check the wheels and tyres of your vehicle for damage regularly, i.e. at least every two weeks, as well as after driving off-road or on rough roads. Damaged wheels can lead to a loss of tyre pressure.

LOOK OUT FOR THE FOLLOWING TYPES OF DAMAGE, FOREXAMPLE:

- cuts in the tyres
- punctures in the tyres
- tears in the tyres
- bulges on tyres
- deformation or severe corrosion on wheels

WARNING
Risk of aquaplaning due to insufficient tyre tread

Insufficient tyre tread will result in reduced tyre grip. There is a risk of an accident.

On a wet road surface the risk of aquaplaning is increased, in particular where speed is not adapted to suit the conditions.

► Check the tread depth and the condition of the tyre contact surface across the entire width of all tyres on a regular basis.

MINIMUM TREAD DEPTH FOR

- Summer tyres: 3 mm
- M+S tyres: 4 mm

► For safety reasons, replace the tyres before the legally-prescribed limit for the minimum tread depth is reached.

► Replace the tyres immediately if the legally-prescribed limit for the minimum tread depth is reached.

CONDUCT THE FOLLOWING CHECKS REGULARLY ON ALL WHEELS, AT LEAST ONCE A MONTH OR AS REQUIRED, E.G. BEFORE A LONG JOURNEY OR WHEN DRIVING OFF-ROAD:

- check the tyre pressure (⟶ page 677)
- check the valve caps

  The valves must be protected against moisture and dirt by the valve caps approved especially for your vehicle by Mercedes-Benz .
- Visually inspect the tread depth and the tyre tread across the whole tyre width

  The minimum tyre tread depth for summer tyres is 3 mm and for winter tyres 4 mm.

Removing the warning triangle

The warning triangle is located in the stowage compartment in the front passenger door.

► Take the warning triangle out of the stowage compartment.

Removing the first-aid kit (soft sided)

The first-aid kit (soft sided) is located in the storage compartment in the front passenger door.

► Remove the first-aid kit (soft sided) from the storage compartment.

Overview of updating the map data

As the content of a digital road map has a short life, outdated data may have a negative effect on all navigation functions. For the best MBUX navigation experience, you should install all of the map updates offered by Mercedes-Benz.

THE FOLLOWING OPTIONS ARE AVAILABLE FOR THE UPDATE OF MAP DATA:

- Online map update
- Updates via the Mercedes-Benz Portal
- Update at a Mercedes-Benz service centre

  Additional costs can be incurred in this process.

ONLINE MAP UPDATE REQUIREMENTS:

- Digital Extras are available.
- You have a Mercedes me ID.
- The vehicle is linked to your Mercedes me ID and you have accepted the terms of use for the Digital Extra.

  Further information can be found at: https://www.mercedes.me
- The Online Map Update is available for your region.
- The Online Map Update has been activated.

ⓘ The Online Map Update is only available in certain countries.

Installation takes place in the background as an automatic map update.

The MBUX multimedia system installs all of the available map updates for the regions in which the vehicle is located or is moved.

The online map update is activated at the latest after the next time the vehicle is switched on.

UPDATES VIA THE MERCEDES-BENZ PORTAL
The map data for several regions can also be updated manually. Log in with your Mercedes me ID at: https://www.mercedes-benz.de/

Follow the menu path My Mercedes me ID > My vehicles > Selection of car > Online Map Update. Select the regions to be downloaded to a storage medium.

After the map data has been copied, connect the storage medium with your vehicle. Select the notification with information about a new version of the map data and start the installation. After the MBUX multimedia system has been restarted, the updated map data is used.

Entering a POI or address

Requirements

- **For the online search:**
  - There is an Internet connection.
  - Digital Extras are available.
  - You have created a Mercedes me ID.
  - The vehicle is linked to the Mercedes me ID and you have accepted the terms of use.
  - Further information can be found at: https://www.mercedes.me
  - The Digital Extra is available and has been activated.

ⓘ If Online Search is not available, the search is performed using the data of the digital map.

Multimedia system:

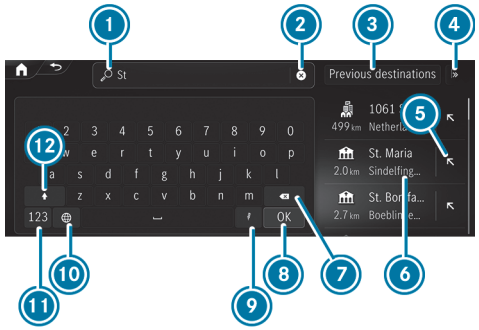

Example: entering a POI or address

1. Input line with current input
2. Deletes an entry
3. Selects previous destinations
4. Displays and selects additional destination searches
5. Adopts the search result in the input line and continues the search
6. Search result
7. Deletes the last character entered
8. Hides the keypad
9. Activates voice input
10. Sets the written language
11. Switches to digits and special characters
12. Switches to upper-case or lower-case letters

- Enter the destination. The entries can be made in any order.
  The search results are displayed in a list.

> Online search results for POIs may contain additional information, for example opening times and ratings. The information is provided by an online map service.
> This online function is not available in all countries.

THE FOLLOWING ENTRIES CAN BE MADE, FOR EXAMPLE IN ①:

- Town, street, house number or street, town
- Postcode
- POI name or POI category, e.g. Restaurants
- Town, POI name
- Contact name
- Geo-coordinates (⟶ page 523)

- Hide the keyboard with OK.
- Select the destination in the list.
  The following menu shows the selected destination with the address information and a corresponding map section.
  The menu enables the route to be calculated.

Searching for radio stations using station names or frequency entry

Multimedia system:

- Select .
- Enter a station name or frequency.
- Select a station.

Luggage and loading

Attaching the ball neck

WARNING
Risk of accident and injury due to incorrectly installed and secured ball neck

If the ball neck is not engaged, it may become loose while the vehicle is in motion and endanger other road users.

- Engage the ball neck as described and ensure that the ball neck is securely installed.

WARNING
Danger of accident due to non-engaged ball coupling

If the ball coupling has not engaged, the trailer can become detached.

- Always engage the ball coupling as described and ensure that it is securely installed.

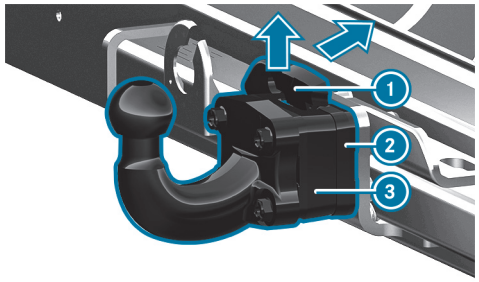

- Use the parking brake to secure the vehicle against rolling away.
- Pull safety spring (1) of ball coupling (3) upwards in the direction of the arrow, push it backwards and hold it in this position.

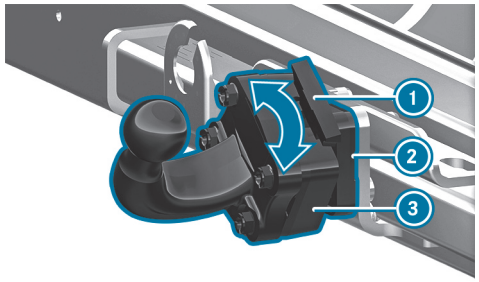

- Place ball neck ③ onto ball neck mount ② and turn it in the direction of the arrow until ball neck ③ points vertically upwards.
- Re-attach safety spring ①.

ⓘ If the ball neck is dirty, clean it before installation.

Overview of lashing points

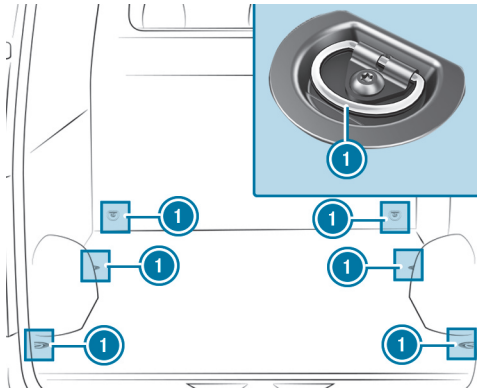

Lashing points (example: panel van without loading rails)
① Tie-down eyes

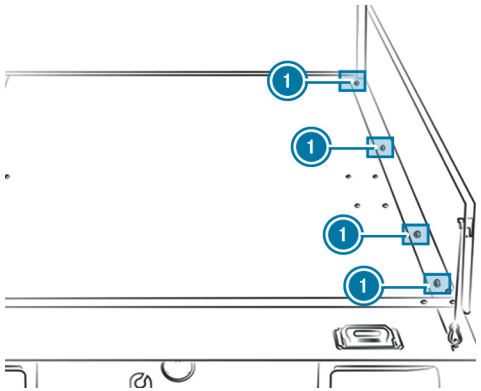

Lashing points (example: platform vehicle)
① Tie-down eyes

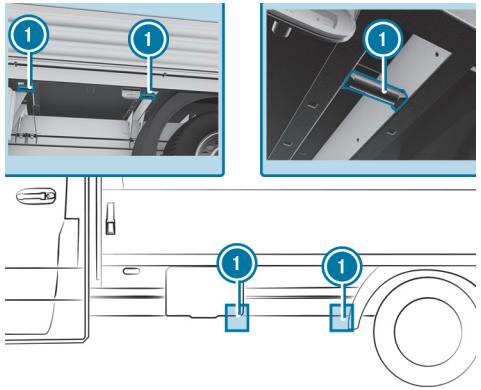

Lashing points (example: platform vehicle)
① Tie-down eyes

Once you have removed the platform dropsides, you can use the lashing points on the bottom left and right of the crossmember.

Secure loose loads, in particular on the load surface of a platform vehicle, with an approved lashing net or tarpaulin.

Always fasten the lashing net or tarpaulin to all available lashing points. Make sure that the fastening hooks are secured against accidental opening.

If your vehicle is equipped with loading rails in the load compartment floor, you can place lashing rods directly in front of and behind the load. The lashing rods directly absorb the potential shifting forces.

Securing loads on the load compartment floor by lashing them down is only recommended for lightweight loads. Lay anti-slip mats under the load to assist in securing it.

Overview of the front storage compartments

Observe the notes on loading the vehicle (⟶ page 593).

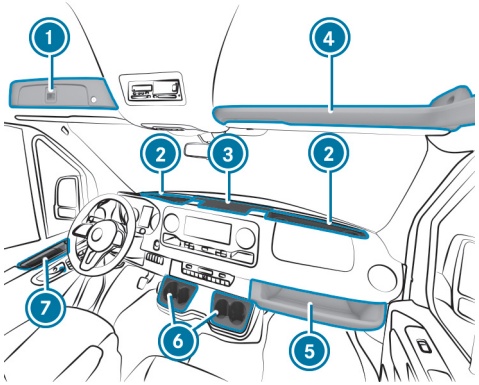

1. Lockable compartment above windscreen (subject to a maximum load of 2 kg)
2. Windscreen storage compartment with two cup holders / ashtray stowage space
   Storage compartment with cover, depending on specification
3. Centre console storage compartment with USB port, charging interface, NFC interface and 12 V socket
4. Storage compartment above windscreen (subject to a maximum load of 2.5 kg)
5. Front passenger side storage compartment (subject to a maximum load of 5 kg)
6. Cup holder (⟶ page 239)
7. Storage compartment in the doors

Ice and snow

Notes on regularly inspecting wheels and tyres

WARNING
Risk of injury due to damaged tyres

Damaged tyres can cause tyre pressure loss.

- ► Check the tyres regularly for signs of damage and replace any damaged tyres immediately.

Check the wheels and tyres of your vehicle for damage regularly, i.e. at least every two weeks, as well as after driving off-road or on rough roads. Damaged wheels can lead to a loss of tyre pressure.

LOOK OUT FOR THE FOLLOWING TYPES OF DAMAGE, FOREXAMPLE:

- cuts in the tyres
- punctures in the tyres
- tears in the tyres
- bulges on tyres
- deformation or severe corrosion on wheels

WARNING
Risk of aquaplaning due to insufficient tyre tread

Insufficient tyre tread will result in reduced tyre grip. There is a risk of an accident.

On a wet road surface the risk of aquaplaning is increased, in particular where speed is not adapted to suit the conditions.

- ► Check the tread depth and the condition of the tyre contact surface across the entire width of all tyres on a regular basis.

MINIMUM TREAD DEPTH FOR

- Summer tyres: 3 mm
- M+S tyres: 4 mm

- ► For safety reasons, replace the tyres before the legally-prescribed limit for the minimum tread depth is reached.
- ► Replace the tyres immediately if the legally-prescribed limit for the minimum tread depth is reached.

CONDUCT THE FOLLOWING CHECKS REGULARLY ON ALL WHEELS, AT LEAST ONCE A MONTH OR AS REQUIRED, E.G. BEFORE A LONG JOURNEY OR WHEN DRIVING OFF-ROAD:

- check the tyre pressure (⟶ page 677)

- check the valve caps

  The valves must be protected against moisture and dirt by the valve caps approved especially for your vehicle by Mercedes-Benz .
- Visually inspect the tread depth and the tyre tread across the whole tyre width

  The minimum tyre tread depth for summer tyres is 3 mm and for winter tyres 4 mm.

Setting the speed limitation for winter tyres

Multimedia system:

Settings ▶▶ Vehicle ▶▶ Winter tyre limit

▶ Select a speed or deactivate the function.

Notes on snow chains

WARNING
Risk of accident due to incorrectly fitted snow chains

Vehicles with rear-wheel drive: if you have fitted snow chains to the front wheels, they may drag against the vehicle body or chassis components.

▶ Never fit snow chains to the front wheels.

▶ Only fit snow chains on the rear wheels in pairs.

▶ **Vehicles with twin tyres:** fit the snow chains to the outer wheels.

WARNING
Risk of accident due to incorrectly fitted snow chains

Vehicles with front-wheel drive: if you have fitted snow chains to the rear wheels, they may drag against the vehicle body or chassis components.

▶ Never fit snow chains on the rear wheels.

▶ Only fit snow chains on the front wheels in pairs.

WARNING
Risk of accident due to unsuitable snow chains

Commercially available snow chains can come loose and damage chassis components or brake hoses.

▶ On vehicles with all-wheel or front-wheel drive and single tyres, only fit snow chains approved by Mercedes-Benz for these tyres.

For safety reasons, Mercedes-Benz recommends that you only use snow chains that have been tested and approved. You can obtain information about snow chains from any qualified specialist workshop.

WARNING
Risk of accident due to snow chains breaking

If you drive too fast with snow chains, they can break, injure other persons, and damage the vehicle.

► Observe the maximum permissible speed for operation with snow chains.

NOTE
Damage to the wheel trim from fitted snow chains

If snow chains are fitted to steel wheels, the wheel trims can be damaged.

► Remove the wheel trims of steel wheels before fitting snow chains.

OBSERVE THE FOLLOWING NOTES WHEN USING SNOW CHAINS:

- Snow chains are only permissible for certain wheel/tyre combinations. You can obtain information on this matter at a qualified specialist workshop.
- For safety reasons, only use snow chains that have been specifically approved for your vehicle by Mercedes-Benz, or snow chains with the same quality standard.
- The snow chains must be retightened after driving approximately 1 km. This is the only way to ensure the snow chains are optimally fitted with clearance to adjacent components.
- **Vehicles with all-wheel drive:** always fit snow chains on all four wheels. On vehicles with twin tyres, fit the snow chains on the outer wheels. Observe the manufacturer's installation instructions.
- Use snow chains only when the road surface is completely snow-covered. Remove the snow chains as soon as possible when you come to a road that is not snow-covered.
- Local regulations may restrict the use of snow chains. Observe the applicable regulations before fitting snow chains.
- If snow chains are fitted, the maximum permissible speed is 50 km/h.
- **Vehicles with Parking Assist:** do not use Parking Assist PARKTRONIC when snow chains are fitted.

ⓘ You can permanently limit the maximum design speed for driving with winter tyres (⟶ page 385).

Notes on windscreen washer fluid

Observe the notes on operating fluids (⟶ page 741).

WARNING
- Risk of fire and injury due to windscreen washer concentrate

Windscreen washer concentrate is highly flammable. It could ignite if it comes into contact with hot engine component parts or the exhaust system.

► Make sure that no windscreen washer concentrate spills out next to the filler opening.

NOTE
Damage to the exterior lighting due to unsuitable windscreen washer fluid

Unsuitable windscreen washer fluids may damage the plastic surface of the exterior lighting.

► Only use windscreen washer fluids which are also suitable for use on plastic surfaces, e.g. MB SummerFit or MB WinterFit.

NOTE
Blocked spray nozzles caused by mixing windscreen washer fluids

► Do not mix MB SummerFit and MB WinterFit with other wind-screen washer fluids.

Do not use distilled or de-ionised water. Otherwise, the fill level sensor may be actuated erroneously.

Topping up the windscreen washer system

WARNING
Risk of burns when opening the bonnet

IF YOU OPEN THE BONNET IN THE EVENT OF AN OVERHEATED ENGINE OR FIRE IN THE ENGINE COMPARTMENT, THE FOLLOWING SITUATIONS MAY OCCUR:

- You may come into contact with hot gases.
- You may come into contact with other escaping hot operating fluids.

► Before opening the bonnet, allow the engine to cool down.

► In the event of a fire in the engine compartment, keep the bonnet closed and call the fire service.

WARNING
Risk of injury due to moving parts

Components in the engine compartment can continue to run or start unexpectedly even when the ignition is switched off.

Observe the following before performing tasks in the engine compartment:

- Switch off the ignition.
- Never touch the danger zone surrounding moving components, e.g. the rotation area of the fan.
- Remove jewellery and watches.
- Keep items of clothing and hair away from moving parts.

WARNING
- Risk of fire and injury due to windscreen washer concentrate

Windscreen washer concentrate is highly flammable. It could ignite if it comes into contact with hot engine component parts or the exhaust system.

- Make sure that no windscreen washer concentrate spills out next to the filler opening.

WARNING
Risk of burns from hot component parts in the engine compartment

Certain component parts in the engine compartment can be very hot, e.g. the engine, the cooler and parts of the exhaust system.

- Allow the engine to cool down and only touch component parts described in the following.

IF YOU HAVE TO CARRY OUT ANY WORK IN THE ENGINE COMPARTMENT, TOUCH ONLY THE FOLLOWING COMPONENT PARTS:

- Bonnet
- Engine oil filler opening cap
- Washer fluid reservoir cap
- Coolant expansion reservoir cap

NOTE
Damage to the exterior lighting due to unsuitable windscreen washer fluid

Unsuitable windscreen washer fluids may damage the plastic surface of the exterior lighting.

- Only use windscreen washer fluids that are also suitable for use on plastic surfaces, e.g. MB SummerFit or MB WinterFit.

TOPPING UP THE WASHER FLUID

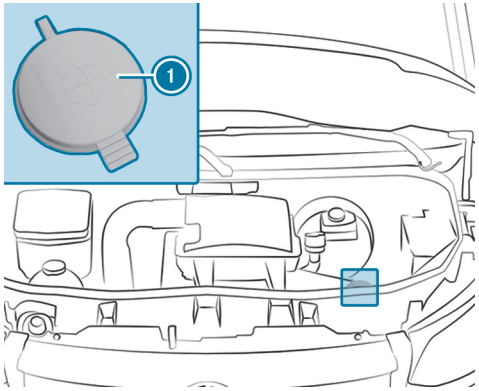

Washer fluid reservoir (example)

- Pre-mix the washer fluid in the correct mixing ratio in a container.
- Park the vehicle on a level surface and secure it against rolling away (⟶ page 361).
- Open the bonnet (⟶ page 606).
- Pull the cap (1) of the washer fluid reservoir upwards by the tab.
- Pour in the pre-mixed washer fluid.
- Push the cap (1) onto the filler opening until it audibly engages.
- Close the bonnet (⟶ page 606).

Replacing the windscreen wiper blades

WARNING
Risk of becoming trapped if the windscreen wipers are switched on while wiper blades are being replaced

If the windscreen wipers begin to move while you are changing the wiper blades, you can be trapped by the wiper arm.

- Always switch off the windscreen wipers and vehicle before changing the wiper blades.

WARNING
Risk of injury from using the windscreen wipers when the bonnet is open

If the windscreen wipers start moving when the bonnet is open, you could be trapped by the wiper linkage.

- Always switch off the windscreen wipers and vehicle before opening the engine bonnet.

Replacing the wiper blades

If the wiper blades are worn out, they will no longer wipe the windscreen properly. Replace the wiper blades twice a year, preferably in spring and autumn.

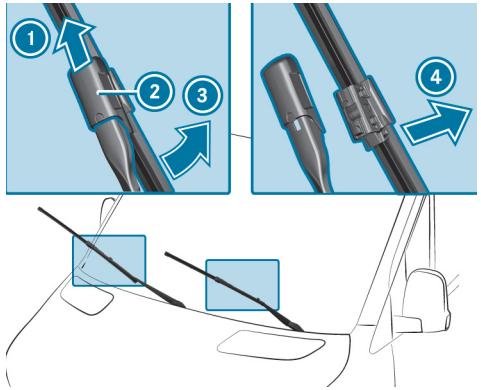

- Fold the wiper arm away from the windscreen.
- Hold wiper arm and fold the wiper blade away from wiper arm in the direction of arrow 3 as far as it will go.
- Slide catch 2 upwards in the direction of arrow 1 until it engages.
- Fold the wiper blade back onto the wiper arm.
- Remove the wiper blade from the wiper arm in the direction of arrow 4.
- Insert new wiper blade in the holder on wiper arm.

WHEN DOING SO, TAKE INTO ACCOUNT THE DIFFERENT LENGTHS OF THE WIPER BLADES:

- Driver's side: long wiper blade
- Front passenger side: short wiper blade

- Slide catch 2 downwards until it engages.
- Fold wiper arm back onto the windscreen.

Setting the hot-water auxiliary heater using the on-board computer

DANGER
Risk of fatal injury due to poisonous exhaust gases

If the tailpipe is blocked or sufficient ventilation is not possible, poisonous exhaust gases such as carbon monoxide may enter the vehicle. This is the case in enclosed spaces or if the vehicle gets stuck in snow, for example.

- Always switch the stationary heater off in enclosed spaces without an air extraction system, e.g. in garages.
- Keep the tailpipe and the area around the vehicle free from snow when the engine or the stationary heater is running.
- Open a window on the side of the vehicle facing away from the wind to ensure an adequate supply of fresh air.

WARNING
Risk of fire due to hot stationary heater components and exhaust gases

Flammable materials such as leaves, grass or twigs may ignite.

- When the stationary heater is switched on, make sure that:
  - hot vehicle parts do not come into contact with flammable materials.
  - the exhaust gas can flow out of the stationary heater exhaust pipe unhindered.
  - the exhaust gas does not come into contact with flammable materials.

NOTE
Battery discharge caused by stationary heater or stationary ventilation operation

Operating the stationary heater or stationary ventilation drains the battery.

- After heating or ventilating the vehicle twice, drive for a longer period of time.

Requirements

- The fuel tank is filled above the reserve level.
- The vehicle is switched on.

On-board computer:
Settings ▶▶ Heating

SETTING THE SWITCH-ON TIME

- Select Settings.
- Select the desired departure time.

ACTIVATING THE DEPARTURE TIME

- Activate the departure time by ticking the box.

ⓘ Ensure that A, B and C each correspond to a programmed departure time.

ⓘ The programmed time will remain active only until the next time the vehicle is started.

SELECTING A PROGRAMMED TIME

- Set the required programmed time – A, B or C.

ⓘ The required programmed time – A, B or C – will appear only if the box to activate the departure time is ticked.

- Select the required programmed time by swiping left or right, e.g. A, B or C.

Help in the event of a breakdown

Switching the hazard warning light system on/off

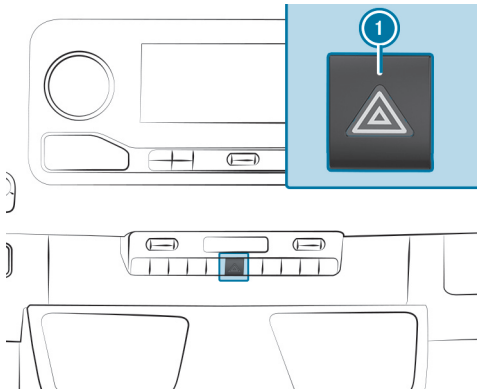

► Press the 1 button.

If you operate a turn signal indicator while the hazard warning light system is switched on, only the turn signal lamps on the relevant side of the vehicle will light up.

THE HAZARD WARNING LIGHT SYSTEM WILL SWITCH ON AUTOMATICALLY IN THE FOLLOWING SITUATIONS:

- The airbag is deployed
- The vehicle is heavily braked from a speed of more than 70 km/h to a standstill.

If the hazard warning light system has automatically switched on, press hazard warning lamp switch 1 to switch it off.

The hazard warning light system will automatically switch off when the vehicle regains a speed of more than 10 km/h after maximum full-stop braking.

ⓘ The hazard warning light system will work even when the vehicle has been switched off.

Removing and stowing the fire extinguisher

⚠ **WARNING**
Risk of accident due to an incorrectly secured fire extinguisher in the driver's footwell

A fire extinguisher may impede pedal travel or block a depressed pedal.

This jeopardises the operating and road safety of the vehicle.

The fire extinguisher can be flung around and injure the driver or other vehicle occupants.

► Always store and secure the fire extinguisher in the bracket.

► Do not remove the fire extinguisher while driving.

REMOVING AND STOWING

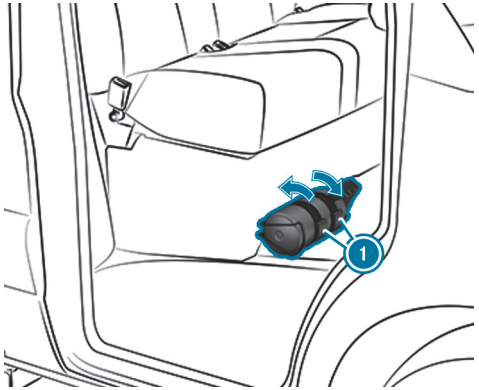

- Open the front passenger door.
- **To remove:** pull the tabs on the bracket of the fire extinguisher (1) upwards.
- Remove the fire extinguisher.
- **To stow:** stow the fire extinguisher.
- Push the tabs on the bracket of the fire extinguisher (1) downwards.

> ⓘ In a right-hand drive vehicle, the fire extinguisher is located by the front passenger seat on the left as viewed in the direction of travel.

INDONESIA: REMOVE AND STOW

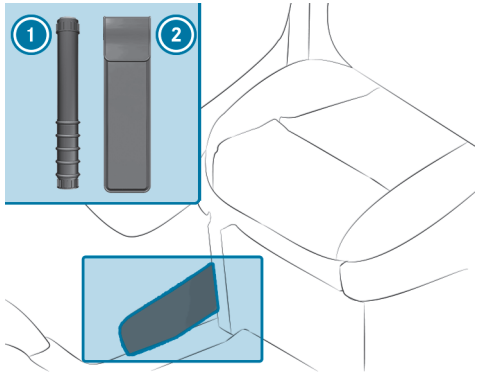

Fire extinguisher in the door stowage compartment of the front passenger door

(1) Fire extinguisher
(2) Bag

- Remove the fire extinguisher (1) from the bag (2) and stow it back in the same place.

Removing the warning triangle

The warning triangle is located in the stowage compartment in the front passenger door.

- Take the warning triangle out of the stowage compartment.

Removing the first-aid kit (soft sided)

The first-aid kit (soft sided) is located in the storage compartment in the front passenger door.

- Remove the first-aid kit (soft sided) from the storage compartment.

QR codes for rescue card

The QR code stickers are affixed to the B-pillars on the driver's side and front passenger side. In the event of an accident, emergency services can use the QR code to quickly determine the corresponding rescue card for your vehicle. The current rescue card contains the most important information pertaining to your vehicle (e.g.routing of the electric lines) in a compact format.

Additional information can be obtained at: https://rk.mb-qr.com/de/

Starting assistance and charging the starter battery

- Always use the jump-start connection in the engine compartment for starting assistance and when charging the battery.

NOTICE
Damage to the battery due to overvoltage

When charging using a battery charger without a maximum charging voltage, the battery or the on-board electronics may be damaged.

- Only use battery chargers with a maximum charging voltage of 14.8 V.

NOTE
Damage to the exhaust system due to prolonged idling operation to charge the battery

Prolonged idling operation can lead to irreparable damage to the exhaust system components.

- Do not charge the battery by leaving it idling for long periods.

WARNING
Risk of explosion due to the ignition of hydrogen gas

If there is a short circuit or sparks are created, there is a danger of hydrogen gas igniting when you charge the battery.

- Take care that the positive terminal of a connected battery does not come into contact with vehicle parts.
- Never place metal objects or tools on a battery.
- When connecting and disconnecting the battery, always observe the sequence of battery terminals described.
- During starting assistance, always take care to connect only battery terminals of identical polarity.
- During starting assistance, observe the sequence described for connecting and disconnecting the jump leads.
- Do not connect or disconnect the battery terminals with the engine running.

WARNING
Risk of explosion due to explosive mixture of gases

An explosive mixture of gases can escape from the battery during charging and starting assistance.

- ► Fire, naked flames, smoking and creating sparks must be avoided.
- ► Make sure there is adequate ventilation.
- ► Do not stand over the battery.

WARNING
Risk of explosion from a frozen battery

A discharged battery may freeze at temperatures slightly above or below freezing point.

During starting assistance or battery charging, battery gas can be released.

- ► Always allow a battery to thaw before charging it or performing starting assistance.

If the warning/indicator lamps do not light up in the instrument cluster at temperatures around or below freezing, it is highly probable that the discharged battery has frozen.

IN THIS CASE, OBSERVE THE FOLLOWING POINTS:

- Do not give the vehicle starting assistance or charge the battery.
- The service life of a battery that has been thawed may be reduced drastically.
- The starting behaviour may deteriorate, particularly at low temperatures.
- It is recommended that you have a thawed battery checked at a qualified specialist workshop.

NOTE
Damage caused by numerous or extended attempts to start the engine

Numerous or extended attempts to start the engine may damage the catalytic converter due to non-combusted fuel.

- ► Avoid numerous and extended attempts to start the engine.

WHEN JUMP-STARTING AND CHARGING THE BATTERIES, OBSERVE THE FOLLOWING POINTS:

- Only use undamaged jump leads/charging cables with a sufficient cross-section and insulated terminal clamps.
- Non-insulated parts of the terminal clamps must not come into contact with other metal parts while the jump leads/charging cables are connected to the battery/jump-start connection point.
- The jump leads/charging cables must not come into contact with any parts which may move when the engine is running.
- Make sure that neither you nor the battery is electrostatically charged.
- Avoid fire and naked flames.
- Do not lean over a battery.
- **When charging:** only use a battery charger that has been tested and approved by Mercedes-Benz and read the operating instructions for your charger before charging the batteries.

OBSERVE THE ADDITIONAL FOLLOWING POINTS DURING STARTING ASSISTANCE:

- Starting assistance may only be provided using batteries with a nominal voltage of 12 V.
- The vehicles must not touch each other.

▶ **Vehicles with a battery main switch:** check whether the battery main switch is inserted(⟶ page 330).

▶ Use the parking brake to secure the vehicle.

▶ **Vehicles with automatic transmission:** shift the transmission to position P.

▶ **Vehicles with manual transmission:** shift to neutral.

▶ Shift to neutral.

▶ Switch off the vehicle and all electrical consumers.

▶ Open the bonnet (⟶ page 606).

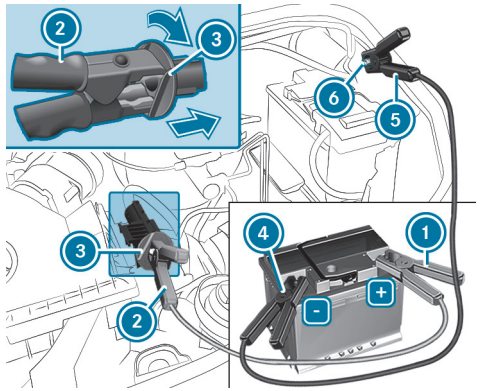

ⓘ **Right-hand drive vehicle:** the jump-start connection may be on the opposite side.

▶ Remove the cover from the POSITIVE terminal of the donor battery.

▶ First connect red POSITIVE terminal clamp ① from the starting assistance/charging cable to the POSITIVE terminal of the donor battery.

▶ Using second red POSITIVE terminal clamp ② of the starting assistance/charging cable, slide red cover cap on jump-start connection ③ back with a clockwise turn.

▶ Attach second red POSITIVE terminal clamp ② to the POSITIVE terminal of jump-start connection ③.

▶ **For starting assistance:** start the engine of the donor vehicle and let it run at idle speed.

▶ First connect black NEGATIVE terminal clamp ④ of the starting assistance/charging cable to the NEGATIVE terminal of the donor battery.

▶ Connect second black NEGATIVE terminal clamp ⑤ of the starting assistance/charging cable to earth point ⑥ on your own vehicle (bare metal part in the engine compartment).

▶ **For starting assistance:** start the vehicle.

▶ **For charging:** start the charging process.

▶ **For starting assistance:** let the engine run for a few minutes.

▶ **For starting assistance:** before disconnecting the jump lead, switch on an electrical consumer on your own vehicle, e.g. the rear window heater or lighting.

When the starting assistance/charging process is complete:

- Remove the terminal clamps of the starting assistance/charging cable in reverse order. First remove second black NEGATIVE terminal clamp ⑤ from earth point ⑥ in the engine compartment. Then remove black NEGATIVE terminal clamp ④ from the donor battery. Then remove second red POSITIVE terminal clamp ② from the POSITIVE terminal of jump-start connection ③. Then remove red POSITIVE terminal clamp ① from the donor battery.

  The red cover cap springs back to its initial position when second red POSITIVE terminal clamp ② is disconnected from jump-start connection ③.

You can obtain further information at a qualified specialist workshop.

Notes on electrical fuses

WARNING
Risk of accident and injury due to overloaded lines

If you manipulate or bridge a faulty fuse or if you replace it with a fuse with a higher amperage, the electric line could be overloaded.

This could result in a fire.

- Always replace faulty fuses with specified new fuses containing the correct amperage.

NOTE
Damage due to incorrect fuses

Electrical components or systems could be damaged by incorrect fuses.

- Only use fuses which have been approved by Mercedes-Benz and which have the correct fuse rating.

The electrical fuses in your vehicle isolate defective circuits. If a fuse blows, all the components on the circuit and their functions will cease to operate.

Blown fuses must be replaced with fuses of an equivalent specification, which you can determine by the colour and fuse rating. The fuse allocation chart and further information on the electric fuses and relays can be found in the "Fuse allocation chart" supplement.

NOTE
Damage or malfunctions caused by moisture

Moisture may cause damage to the electrical system or cause it to malfunction.

- When the fuse box is open, make sure that no moisture can enter the fuse box.
- When closing the fuse box, make sure that the seal of the lid is positioned correctly on the fuse box.

If the new fuse which has been inserted also blows, have the cause traced and rectified at a qualified specialist workshop.

MAKE SURE OF THE FOLLOWING BEFORE REPLACING A FUSE:

- The vehicle is secured such that it does not roll away.

- All electrical consumers are switched off.
- The vehicle is switched off.

THE FUSES ARE LOCATED IN VARIOUS FUSE BOXES:

- Fuse box in the co-driver footwell (⟶ page 663)
- Fuse box in the seat base of the driver's seat (⟶ page 663)

Notes on flat tyres

> ⚠ **WARNING**
> Risk of accident due to a flat tyre
>
> A flat tyre strongly impairs the vehicle's driving characteristics, as well as its steering and braking characteristics.
>
> ▶ Do not drive with a flat tyre.
>
> ▶ Replace the flat tyre with the spare wheel. Alternatively, consult a qualified specialist workshop.

IN THE EVENT OF A FLAT TYRE, THE FOLLOWING OPTIONS ARE AVAILABLE DEPENDING ON YOUR VEHICLE'S EQUIPMENT:

- You can make a breakdown assistance call using the breakdown assistance call button in the overhead control panel (⟶ page 474).
- Change the wheel (⟶ page 688).

Overview of the tyre-change tool kit

NECESSARY TYRE-CHANGE TOOL KIT MAY INCLUDE, FOREXAMPLE:

- Jack
- Wheel spanner

> ⓘ You will find the maximum load capacity of the jack stated on the adhesive label attached to the jack.
> The jack is maintenance-free. If there is a malfunction, please contact a qualified specialist workshop.

VEHICLES WITH REAR WHEEL DRIVE

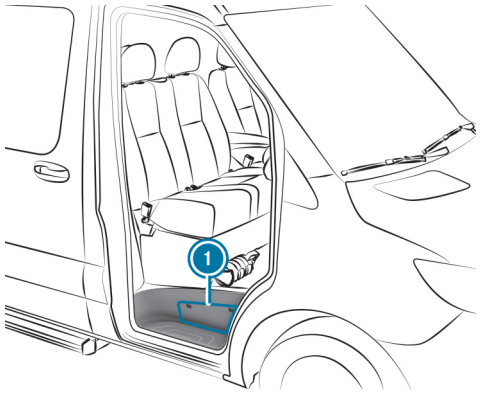

The tyre-change tool kit is located in the stowage compartment ① above the step of the co-driver's door and in the stowage compartment in the footwell on the co-driver side.

VEHICLES WITH FRONT WHEEL DRIVE

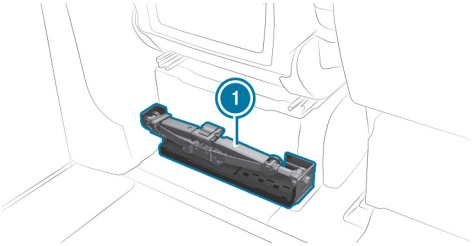

The tyre-change tool kit (1) is located behind the driver's seat.

Permissible towing methods

In the event of a breakdown, Mercedes-Benz recommends that you have the vehicle transported instead of towed.

NOTE
Damage to the vehicle due to towing away incorrectly

► Observe the instructions and notes on towing away.

NOTE
Risk of damage when pushing the vehicle

When a vehicle which is not started, and has front wheel drive and automatic transmission, is pushed or pulled too far and too quickly, it can become damaged.

► Do not push the vehicle further than 15 m, and do not exceed walking pace.

Vehicles with automatic transmission and rear-wheel drive: if there is a malfunction, the automatic transmission may be locked in position P.
If the automatic transmission cannot be shifted to position N, transport the vehicle (→ page 659). A tow truck with lifting equipment is required to transport the vehicle.

Vehicles with automatic transmission and front-wheel drive: in the event of a malfunction, the automatic transmission may be locked in position P. You can release the parking lock manually (→ page 340).
If the automatic transmission cannot be shifted to position N, transport the vehicle (→ page 659). A tow truck with lifting equipment is required to transport the vehicle.

MANUAL TRANSMISSION

Both axles on the ground	Front axle raised	Rear axle raised
Yes, no further than 100 km at 50 km/h	Yes, no further than 100 km at 50 km/h	Yes, no further than 50 km at 50 km/h

AUTOMATIC TRANSMISSION AND REAR-WHEEL DRIVE

Both axles on the ground	Front axle raised	Rear axle raised
Yes, no further than 50 km at 50 km/h	Yes, no further than 50 km at 50 km/h	Yes, if the steering wheel is immobilised in the centre position with a steering wheel lock

AUTOMATIC TRANSMISSION AND FRONT-WHEEL DRIVE

Both axles on the ground	Front axle raised	Rear axle raised
No (when the vehicle has not been started) Yes (when the vehicle has been started), maximum 5 km at 20 km/h	Yes	No (when the vehicle has not been started) Yes (when the vehicle has been started), maximum 5 km at 20 km/h

ALL-WHEEL DRIVE

Both axles on the ground	Front axle raised	Rear axle raised
Yes, no further than 50 km at 50 km/h	No	No

Towing with a raised axle: towing should be done by a towing company.

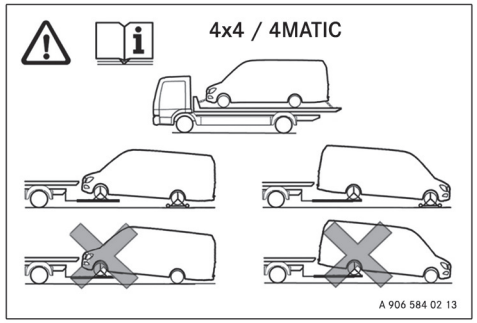

Vehicles with all-wheel drive: warning notice on the B-pillar on the driver's side

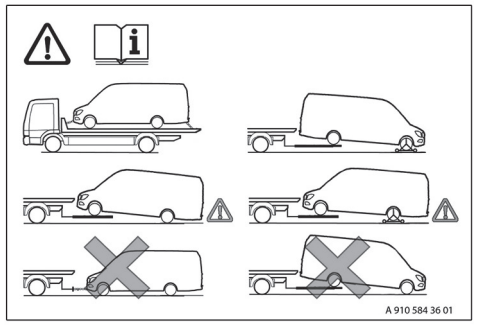

Vehicles with automatic transmission and front-wheel drive: warning notice on the B-pillar on the driver's side

Expert tips

Additional button functions

CONVENIENCE OPENING/CLOSING VIA THE AIR RECIRCULATION BUTTON

- **Convenience closing:** press the button until the side windows begin to close automatically.
  The initial position of the side windows is saved.
- **Convenience opening:** press the button until the side windows begin to open automatically.
  The side windows open automatically until they have reached their previously saved position.

SWITCHING TRAFFIC ANNOUNCEMENTS ON/OFF

Multimedia system:

Radio General

- Activate or deactivate Traffic announcements.

Driving tips

HOW THE ECO START/STOP FUNCTION OPERATES

THE ENGINE WILL BE STOPPED AUTOMATICALLY IF THE FOLLOWING CONDITIONS ARE MET:

- **Vehicles with manual transmissions:** You decelerate the vehicle to a lower speed, engage neutral N and then release the clutch pedal.
- **Vehicles with automatic transmissions:** you stop the vehicle in transmission position D or N.
- The vehicle meets all the conditions for automatic engine stop.

When the vehicle is at a standstill, the symbol Ⓐ will appear on the instrument cluster. If all vehicle conditions are not met, the symbol Ⓐ will appear on the instrument cluster.

THE ENGINE WILL RESTART AUTOMATICALLY IN THE FOLLOWING CASES:

- **Vehicles with manual transmissions:** You depress the clutch pedal.
- **Vehicles with automatic transmissions:** You release the brake pedal in transmission position D and with the HOLD function deactivated.
- **Vehicles with automatic transmissions:** You select transmission position D or R.
- You depress the accelerator pedal.
- The vehicle requires an automatic engine start.

If the engine was switched off by the ECO start/stop function and you leave the vehicle, a warning tone will sound. A display message reading Vehicle is operational Switch off vehicle before exiting will also appear on the instrument cluster. If you do not switch off the vehicle, it will automatically be switched off after one minute.

Good to know

REDUCING ENERGY CONSUMPTION OF THE KEY

DEACTIVATE KEY FUNCTION

If you do not use the vehicle or a key for an extended period of time, you can also deactivate the function of the key to reduce energy consumption of the respective key.

- Press and hold the key button [🔒].
- With the key button [🔒] pressed, immediately press the key button [🔓] twice in quick succession.

  The indicator lamp of the key lights up once briefly and then again for a longer period.

ACTIVATE THE KEY FUNCTION

- Press any button on the key.

> ⓘ If the key in the storage compartment is in emergency operation mode for start-up, the key function is activated automatically (⟶ page 311).

OVERVIEW OF THE MERCEDES-BENZ EMERGENCY CALL SYSTEM

The Mercedes-Benz emergency call system can help to decisively reduce the time between an accident and the arrival of emergency services at the site of the accident. It helps locate an accident site in places that are difficult to access.

The emergency call can be triggered automatically (⟶ page 635).

You also have the option of triggering the emergency call manually (⟶ page 635). Only make emergency calls if you or others are in need of rescue. Do not make an emergency call in the event of a breakdown or a similar situation.

MESSAGE IN THE MEDIA DISPLAY:

SOS NOT READY: the vehicle is not switched on or the emergency call system is malfunctioning.

This does not necessarily indicate a total failure of the emergency call system. Emergency calls can still be transmitted.

The display refers only to the vehicle and does not take account of the availability of mobile phone networks and the Mercedes-Benz emergency call centre.

The functional readiness of the emergency call system on the vehicle can be seen when the SOS NOT READY display disappears once the vehicle is switched on.

During an active emergency call, [SOS] appears in the display.

You can find more information on the regional availability of the Mercedes-Benz emergency call system at: https://www.mercedes-benz-mobile.com/extra/ecall/

> ⓘ If there is a malfunction of the emergency call system, the speakers, microphone, airbag or the SOS button, for example, are faulty.
>
> **YOU CAN RECOGNISE A FAULT IN THE EMERGENCY CALL SYSTEM BY THE FOLLOWING DISPLAYS:**
>
> - The red SOS NOT READY message appears in the display of the instrument cluster or in the media display.
> - The SOS button lights up red continuously.

At a glance

This interactive PDF works like a website – tap or click a button to jump straight to where you want to go.
You can return here at any time via the navigation bar at the top left.

Cockpit
Instrument cluster
Overhead control panel
Door operating unit
Emergencies and breakdowns

Cockpit

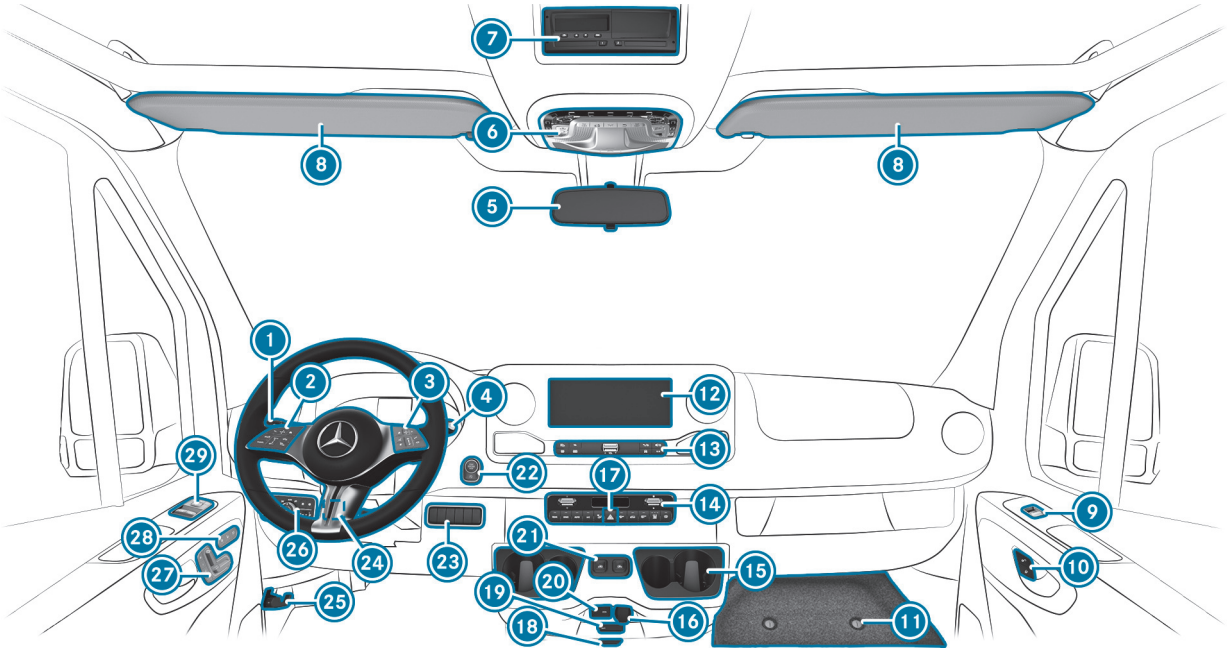
1
2
3
4
5
6
7
8
8
9
10
11
12
13
14
15
16
17
18
19
20
21
22
23
24
25
26
27
28
29

1 Combination switch
- Turn signal indicators
- High beam
- Windscreen wipers
- Rear window wiper

2 Control panel for the on-board computer:
- Cruise control or variable limiter
- Active Distance Assist DISTRONIC

3 Control panel for the MBUX multimedia system

4 DIRECT SELECT lever

5 Inside mirror
- Digital inside mirror

6 Overhead control panel

7 Device installation frame, e.g. for mounting a tachograph or the switch clock for the stationary heater

8 Sun visor

9 Front passenger window lifter

10 Central locking system

11 Stowage compartment cover

12 MBUX multimedia system display

13 MBUX multimedia system control elements

14 Climate control system

15 Cup holder

16 12 V socket

17 Hazard warning lights

18 Key slot for KEYLESS-START

19 230 V socket

20 USB port

21 Opens and closes the electric sliding door

22 Start/stop button

23 Right-hand switch panel
- Activates/deactivates DSR
- Raises/lowers the vehicle level
- Engages/disengages power take-off
- Activates/deactivates working speed control (ADR)
- Activates/deactivates load compartment ventilation
- Activates/deactivates the beacon

24 Left-hand switch panel
- Sets the working speed (ADR)

25 Opens the bonnet

26 Light switch
Headlamp range adjuster
27 Adjusts the driver's seat
28 Seat heating
29 Driver’s window lifter

Instrument cluster

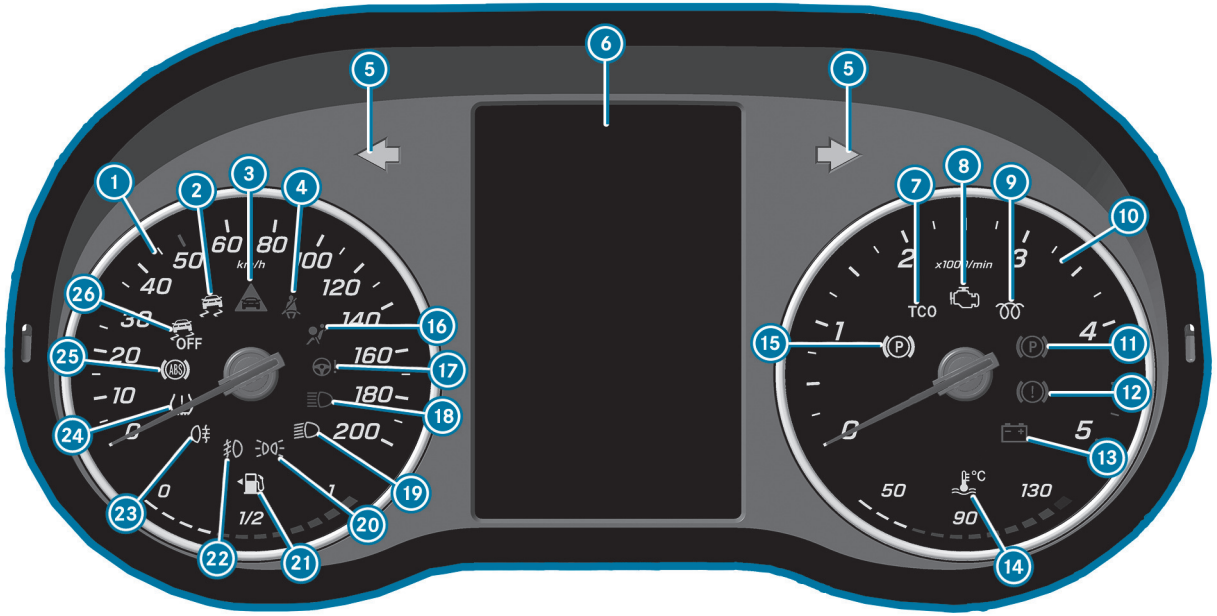

Instrument cluster (example)

1. Speedometer
2. ESP®
3. Distance warning
4. Seat belt
5. Turn signal light
6. Instrument cluster display showing indicator lamps and warning lamps
7. TCO Tachograph
8. Engine diagnosis
9. Pre-glow and fault in pre-glow system
10. Rev counter
11. Parking brake (red)
12. Brakes (red)
13. Electrical fault
14. Coolant warning lamp and coolant temperature indicator
15. Parking brake (yellow)
16. Restraint system
17. Power steering
18. High beam
19. Low beam
20. Sidelights
21. Fuel level indicator and fuel reserve with fuel filler cap location indicator
22. Fog light
23. Rear fog light
24. Tyre pressure monitoring system
25. ABS
26. ESP® deactivated

Overhead control panel

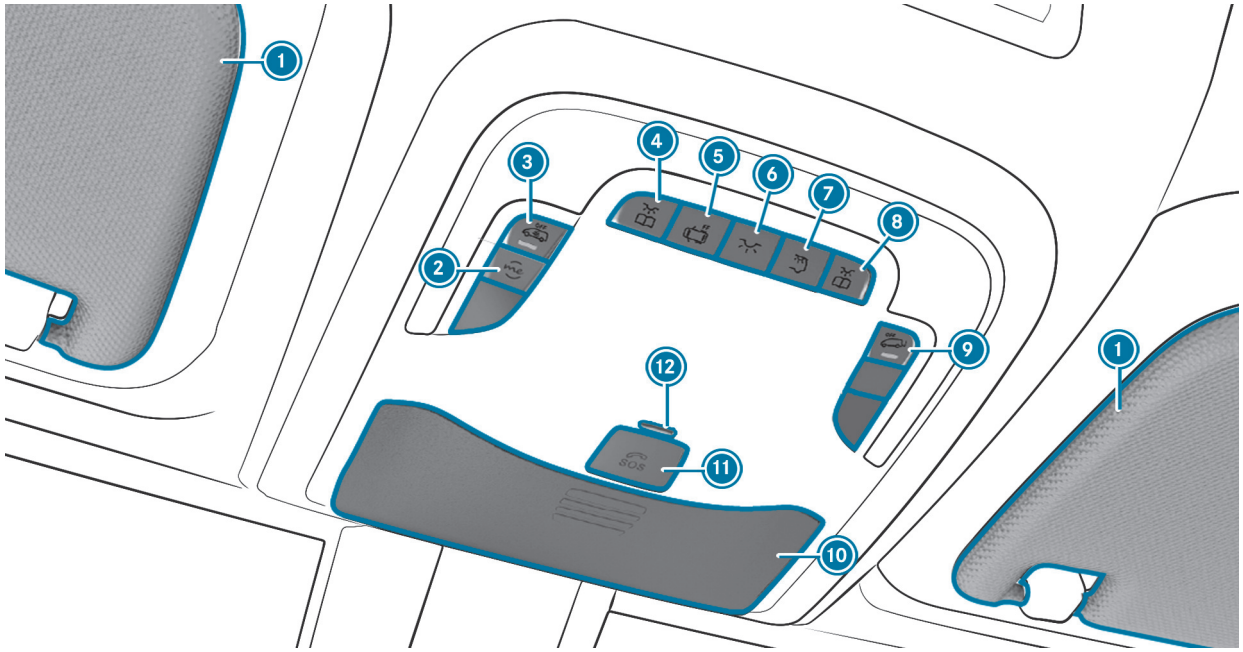

Version 1 of the overhead control panel

Depending on the equipment, certain buttons may be unavailable or unassigned.

1. Sun visors
2. me button for Mercedes-Benz Support calls
3. Switches interior protection on/off
4. Switches the left-hand reading light on/off
5. Switches automatic light control on/off
6. Switches the front interior lighting on/off
7. Switches the rear interior lighting on/off
8. Switches the right-hand reading light on/off
9. Switches tow-away protection on/off
10. Glasses compartment
11. SOS emergency call system (Mercedes-Benz emergency call system)
12. ATA indicator lamp or emergency call system support battery LED indicator lamp (Russia only)

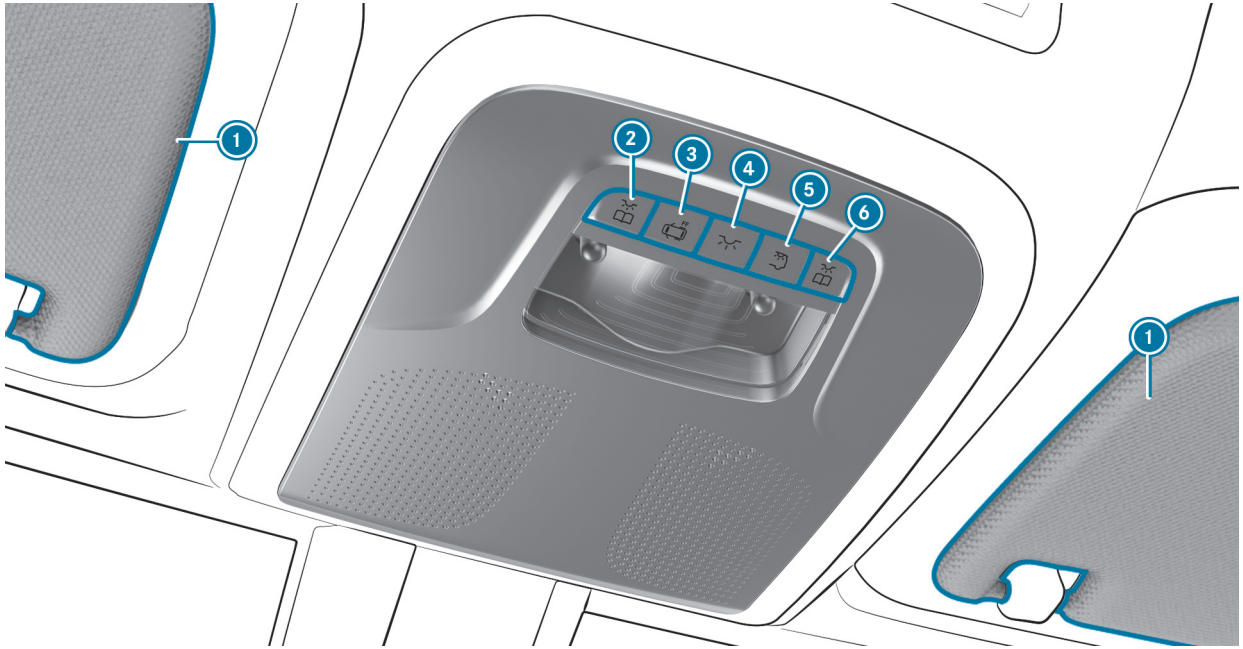

Versions 2 to 4 of the overhead control panel

Depending on the equipment, certain buttons may be unavailable or unassigned.

1. Sun visors
2. Switches the left-hand reading light on/off
3. Switches automatic light control on/off
4. Switches the front interior lighting on/off
5. Switches the rear interior lighting on/off
6. Switches the right-hand reading light on/off

Door operating unit

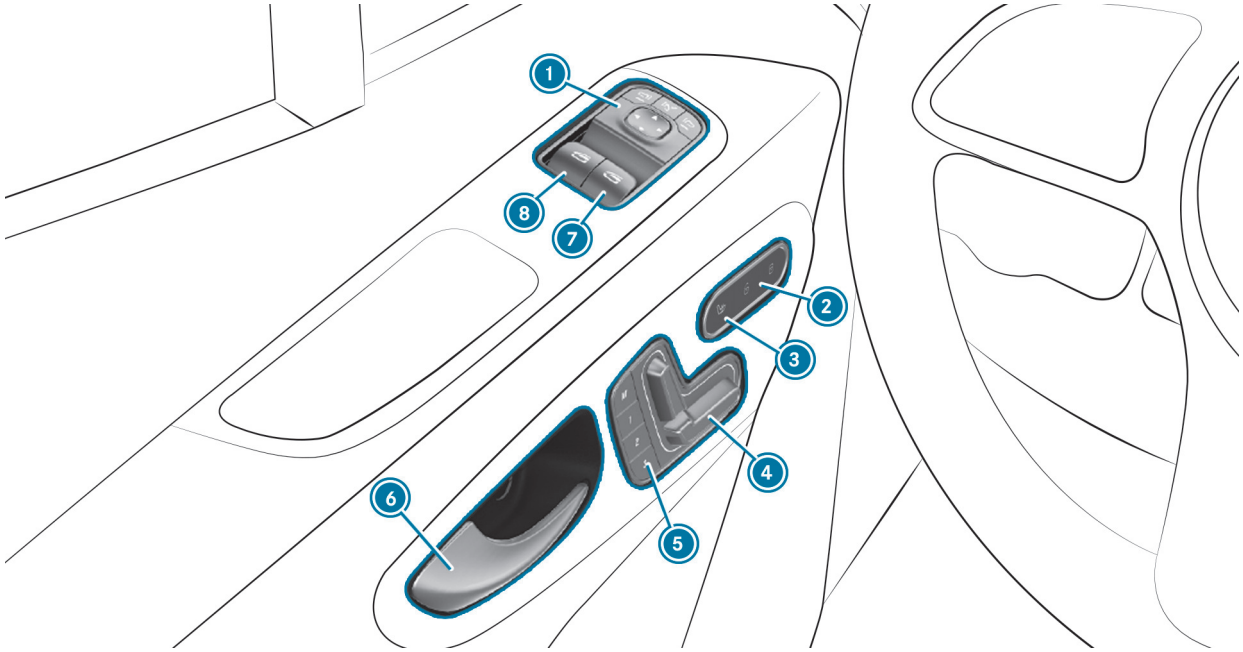

Door operating unit of vehicles with electrically adjustable seat

1 Adjusting the outside mirrors >
2 To unlock/lock the central locking system >
3 Switching seat heating on/off >
4 To adjust the front seats electronically >
5 M 1 2 3 Operating the memory function >
6 Opens the door >
7 To open/close the right-hand side window >
8 To open/close the left-hand side window >

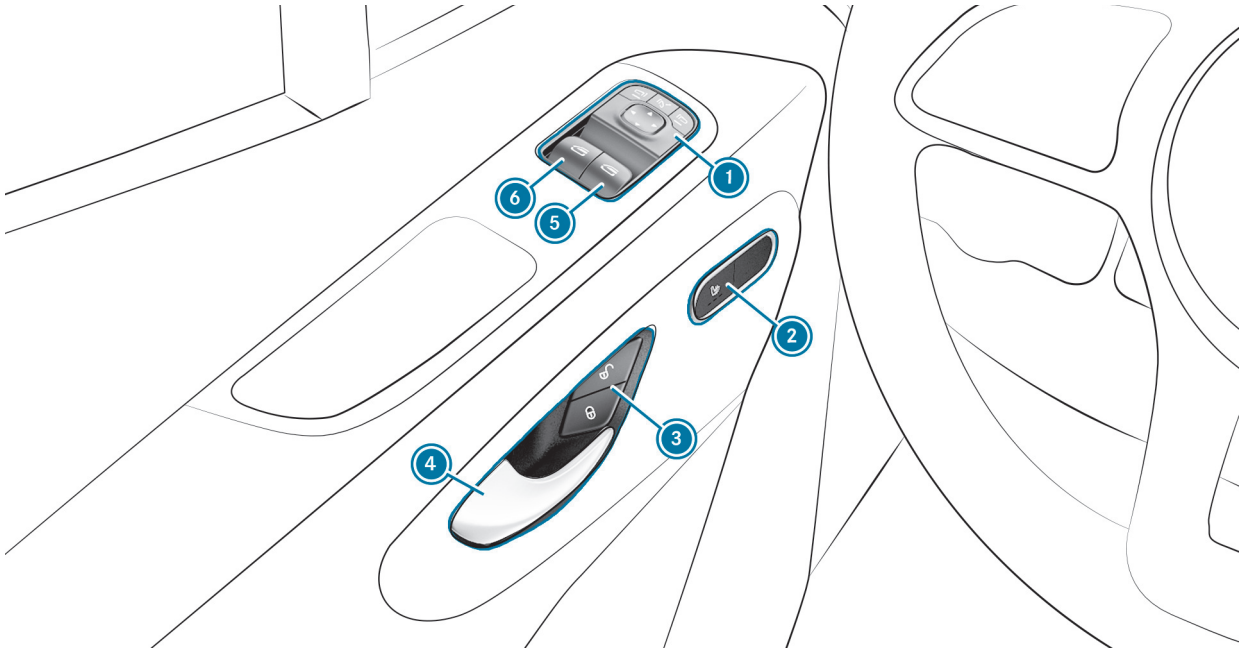

Door operating unit of vehicles without electrically adjustable seat

1 Adjusting the outside mirrors >
2 Switching seat heating on/off >
3 To unlock/lock the central locking system >
4 Opens the door >
5 To open/close the right-hand side window >
6 To open/close the left-hand side window >

Emergencies and breakdowns

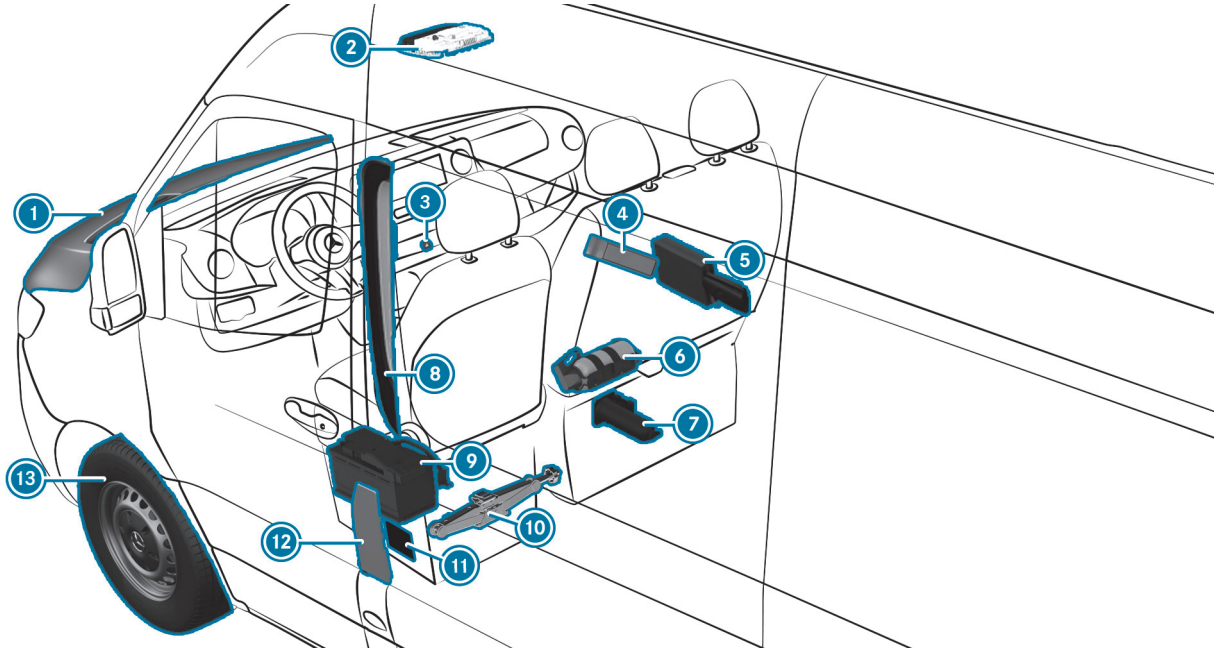

1. Check and top up operating fluids
- Starting assistance
2. Button for SOS emergency call system and me button for Mercedes-Benz Support calls
3. Hazard warning lights
4. Fire extinguisher Indonesia
5. Warning triangle
- Safety vest
- First-aid kit (soft sided)
6. Fire extinguisher
7. Vehicles with rear-wheel drive: hydraulic jack and tyre-change tool kit
8. B-pillar on driver's side, at the height of the door handle, with:
   - QR code for accessing the rescue card
   - Tyre pressure table
   - Vehicles with all-wheel drive or front-wheel drive with automatic transmission: warning notice showing permissible towing methods
9. Disconnects the starter battery
10. Vehicles with front-wheel drive: mechanical jack and tyre-change tool kit
11. Tyre pressure table at the base of the driver's seat
12. Fuel filler flap with information label on fuel type
13. Flat tyre

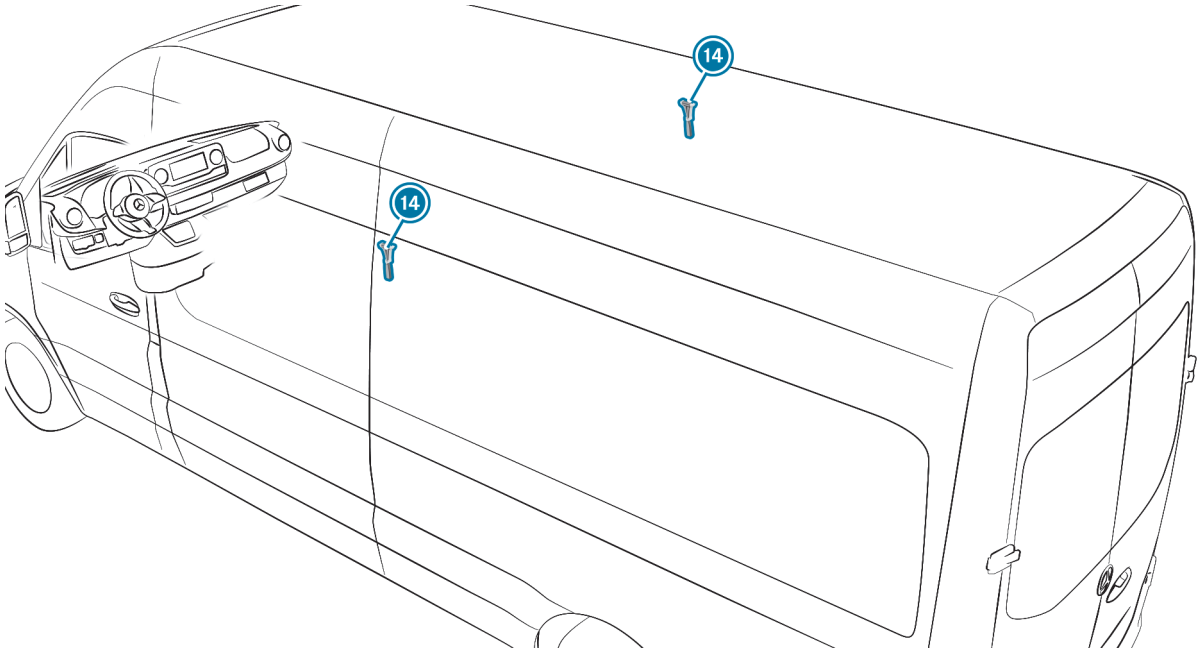
14
14

⑭ Emergency hammer on left or right at emergency exit window >

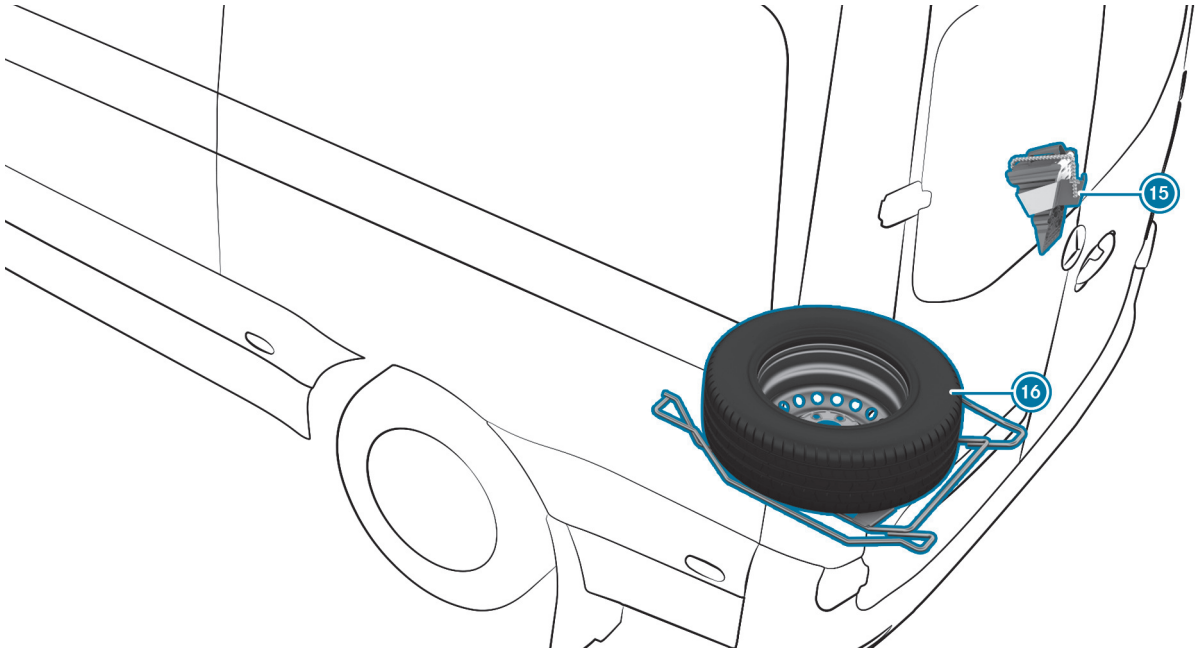
15
16

15 Vehicles with rear-wheel drive: chock >

16 Spare wheel (example) >

Digital Operating Instructions

This interactive PDF works like a website – tap or click a button to jump straight to where you want to go.
You can return here at any time via the navigation bar at the top left.

Calling up the Digital Owner's Manual

Calling up the Digital Owner's Manual

Multimedia system:

Settings ▶▶ Info ▶▶ Open Digital Owner's Manual

The Digital Owner's Manual describes the functions and operation of the vehicle and the multimedia system.

▶ Select one of the following menu items in the Digital Owner's Manual:

- Quick start: find the first steps towards adjusting your seat (driver's side).
- Tips: information to prepare you for certain everyday situations with your vehicle.
- Messages: obtain additional information regarding messages on the instrument cluster display.
- Language: select the language for the Digital Owner's Manual here.

Find quick answers to queries regarding operation of the vehicle by entering keywords pertaining to any function in the Search entry field.

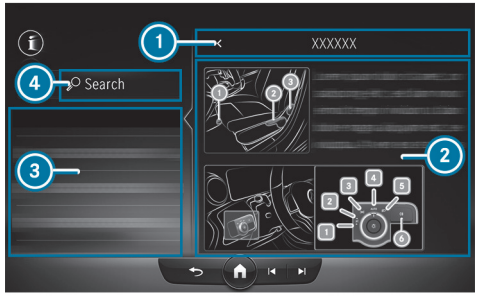

1. Back
2. Contents section
3. Menu
4. Search

Some sections in the Digital Operator's Manual, suchas warning notes, can be expanded and collapsed.

Additional methods of calling up the Digital Owner's Manual:

MBUX Voice Assistant: call-up via the voice control system

Global search: call up search results for contents of the Digital Owner's Manual on the Home Screen

The Digital Owner's Manual is deactivated for safety reasons while driving.

General notes

This interactive PDF works like a website – tap or click a button to jump straight to where you want to go.
You can return here at any time via the navigation bar at the top left.

Environmental protection
Take-back of end-of-life vehicles
Mercedes-Benz GenuineParts
Attachments, add-on equipment, installations and conversions
Operating safety
Fitting the licence plate onto the front licence plate bracket
Declarations of conformity and notes on driving in different countries
Diagnostics connection
Notes on changes to the engine output
Qualified specialist workshop
Vehicle registration
Correct use of the vehicle
REACH Regulation
Notes for persons with electronic medical aids
Implied warranty
QR codes for rescue card
Data storage
Copyright

Environmental protection

ENVIRONMENTAL NOTE
Environmental damage due to operating conditions and personal driving style

The pollutant emission of the vehicle is directly related to the way you operate the vehicle.

Operate your vehicle in an environmentally responsible manner to help protect the environment. Please observe the following recommendations on operating conditions and personal driving style.

Operating conditions:

- Make sure that the tyre pressure is correct.
- Do not carry any unnecessary weight (e.g. roof luggage racks once you no longer need them).
- Adhere to the service intervals.
  A regularly serviced vehicle will contribute to environmental protection.
- Always have maintenance work carried out at a qualified specialist workshop.

Personal driving style:

- Do not depress the accelerator pedal when starting the engine.
- Do not warm up the vehicle while stationary.
- Drive carefully and maintain a suitable distance from the vehicle in front.
- Avoid frequent, sudden acceleration and braking.
- Change gear in good time and use each gear only up to ⅔ of its maximum engine speed.
- Switch off the vehicle in stationary traffic, e.g. by using the ECO start/stop function.
- Drive in a fuel-efficient manner. Observe the ECO display for an economical driving style.

Take-back of end-of-life vehicles

EU COUNTRIES ONLY:
Mercedes-Benz will take back your end-of-life vehicle for environment-friendly disposal in accordance with the European Union (EU) End-Of-Life Vehicles Directive.

A network of vehicle take-back points and dismantlers has been established for you to return your vehicle. You can leave it at any of these points free of charge. This makes an important contribution to closing the recycling circle and conserving resources.

For further information about the recycling and disposal of end-of-life vehicles, and the take-back conditions, please visit the national Mercedes-Benz website for your country.

Mercedes-Benz GenuineParts

ENVIRONMENTAL NOTE
Environmental damage caused by not using recycled reconditioned components

Mercedes-Benz AG offers recycled reconditioned components and parts with the same quality as new parts. The same entitlement from the implied warranty is valid as for new parts.

► Recycled reconditioned components and parts from Mercedes-Benz AG.

NOTE
Impairment of the operating efficiency of the restraint systems due to the installation of accessory parts or due to repairs or welding

AIRBAGS AND SEAT BELT TENSIONERS AS WELL AS CONTROL UNITS AND SENSORS FOR THE RESTRAINT SYSTEMS MAY BE INSTALLED IN THE FOLLOWING AREAS OF YOUR VEHICLE:

- Door frame
- Roof frame
- Doors
- Door pillars
- Sill
- Seats
- Cockpit
- Instrument cluster
- Centre console

► Do not install accessory parts such as audio systems in these areas.

► Do not carry out repairs or welding.

► Have accessories retrofitted at a qualified specialist workshop.

If you use parts, tyres, wheels or safety-relevant accessories that have not been approved by Mercedes-Benz, the operating safety of the vehicle may be jeopardised. Safety-relevant systems such as the brake system may malfunction. Use only Mercedes-Benz GenuineParts or parts of equal quality. Only use tyres, wheels and accessory parts that are approved for your vehicle model.

Mercedes-Benz tests original parts, conversion parts and accessory parts that have been approved for your vehicle model for reliability, safety and suitability. Despite ongoing market research, Mercedes-Benz is unable to assess other parts. Mercedes-Benz accepts no responsibility for the use of such parts in Mercedes-Benz vehicles, even if they have been approved officially or independently by a testing centre.

Certain parts are officially approved for installation or modification only if they comply with legal requirements. All Mercedes-Benz GenuineParts meet the registration requirements. The use of non-approved parts may invalidate the vehicle's general operating permit.

THIS IS THE CASE IN THE FOLLOWING SITUATIONS:

- The vehicle type changes from that stated in the general operating permit.
- Other road users could be endangered.
- The exhaust gas or noise levels are adversely affected.

Always specify the vehicle identification number (VIN) when ordering Mercedes-Benz GenuineParts (→ page 739).

Attachments, add-on equipment, installations and conversions

NOTES ON BODY/EQUIPMENT MOUNTING DIRECTIVES
For safety reasons, have add-on equipment produced and fitted in accordance with the valid Mercedes-Benz body/equipment mounting directives. These body/equipment mounting directives ensure that the chassis and add-on equipment form one unit and that the greatest possible level of operational and driving safety is achieved.

Both vehicle manufacturers and body manufacturers must always ensure that the products they manufacture come into circulation only in a safe state and do not pose any risks to people. Otherwise, there may be consequences under civil, criminal or public law. All manufacturers are responsible for the products that they have manufactured. Manufacturers of attachments, add-on equipment, installations and conversions must guarantee compliance with Directive 2001/95/EC on general product safety.

The body manufacturer must also ensure compliance with standards concerning operational reliability (in accordance with ISO 26262) and cyber security (in accordance with ISO 21434 and UN R155).

MERCEDES-BENZ RECOMMENDS THE FOLLOWING PROCEDURE FOR SAFETY REASONS:

- Do not make any other changes to the vehicle.
- Obtain approval from Mercedes-Benz in the event of deviations from the approved body/equipment mounting directives.

Acceptance tests performed by public test bodies or official approvals do not rule out safety risks.

Observe the information about genuine Mercedes-Benz parts (⟶ page 108).

You will find the Mercedes-Benzbody/equipment mounting directives online on the https://bb-portal.mercedes-benz-vans.com

Remember that special access rights are required in order to access the Mercedes-Benz Bodybuilder Portal.

ⓘ You can obtain further information at a qualified specialist workshop.

ⓘ You can find further information on requesting a check for compatibility with the basic vehicle in the body/equipment mounting directives.

⚠ **WARNING**
Risk of accident and injury in the event of improper conversions or changes to the vehicle

Conversions or changes to the vehicle can prevent systems or components from functioning properly and/or jeopardise the vehicle's operational safety.

► Always have conversions or changes to the vehicle carried out at a qualified workshop.

NOTES ON THE RADIATOR
Even seemingly minor changes to the vehicle, such as attaching a radiator grille in winter, are not permitted. Do not cover the radiator. Do not use any thermal mats, insect protection covers etc.

Otherwise, the values of the vehicle's diagnostic system will be distorted. In some countries, the recording of engine diagnostics data is prescribed by law and must be verifiable and correct at all times.

NOTES ON THE LOAD COMPARTMENT FLOOR
The factory fits the vehicle with a wooden or plastic load compartment floor; this is an integral part of the vehicle structure. If you have the load compartment floor removed, the vehicle body may be damaged. Load securing will then be impaired and the maximum loading capacity of the tie-down points will no longer be guaranteed. Therefore, do not have the load compartment floor removed.

NOTES ON THE PARTITION
Without a partition, vehicles that are approved as commercial vehicles (N1, N2) do not fulfil ISO 27956, which describes the equipment for properly securing a load in delivery vehicles. If the vehicle is used to transport goods, retrofitting the partition is strongly recommended, as properly securing the load in vehicles without a partition will always be complex.

Operating safety

WARNING
Risk of accident due to malfunctions or system failures

If you do not have the prescribed service/maintenance work or any required repairs carried out, this could result in malfunctions or system failures.

- Always have the prescribed service- and maintenance work or any required repairs carried out in a qualified workshop.

WARNING
Risk of accident or injury due to improper modifications to electronic components

Modifications to electronic components, their software or wiring can impair their functionality and/or the functionality of other networked components or safety-relevant systems.

This can endanger the vehicle's operating safety.

- You must not tamper with wiring, electronic components, or their software.
- Always have work on electrical and electronic devices carried out at a qualified specialist workshop.

If you make any changes to the on-board electronics, the operating permit will be rendered invalid.

Please observe the "On-board electronics" section in the "Technical data".

WARNING
Risk of fire due to flammable material coming into contact with hot parts of the exhaust system

If combustible materials, e.g. leaves, grass or twigs, come into contact with hot parts of the exhaust system, they may ignite.

- When driving off-road or on unpaved surfaces, check the underside of the vehicle at regular intervals.
- In particular, remove any trapped parts of plants or other flammable material.
- If damage should occur, immediately inform a qualified specialist workshop.

NOTICE
Damage to the vehicle due to driving too fast and due to impacts to the underbody or suspension components

IN THE FOLLOWING SITUATIONS IN PARTICULAR, THERE IS A RISK OF DAMAGE TO THE VEHICLE:

- The vehicle makes contact with the ground, e.g. on a high kerb or unpaved road.
- The vehicle is driven too fast over an obstacle, e.g. a kerb, speed bump or pothole.
- A heavy object strikes the underbody or suspension components.

In situations such as these, damage to the body, underbody, suspension components, wheels or tyres may not be visible. Components damaged in this way can unexpectedly fail or, in the case of an accident, may no longer absorb the impact force as intended.

If the underbody panelling is damaged, flammable materials, such as leaves, grass or twigs may accumulate between the underbody and the underbody panelling. If these materials come into contact with hot components of the exhaust system, they may ignite.

► Have the vehicle checked and repaired immediately at a qualified specialist workshop.

or

► If driving safety is impaired while continuing your journey, pull over and stop the vehicle immediately, with due attention to road and traffic conditions, and contact a qualified specialist workshop.

Fitting the licence plate onto the front licence plate bracket

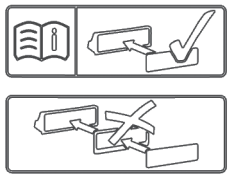

NOTE
Malfunctions and system failures due to incorrect assembly of the licence plate on the front licence plate holder

If the licence plate is incorrectly assembled on the front licence plate holder, sensors, cameras or driving and safety systems may malfunction or fail.

Observe the following points when assembling the licence plate on the front licence plate holder:

- Assemble the licence plate directly on the licence plate holder without advertising media or other holders.
- Mount the licence plate so that it does not protrude from the bottom or side of the licence plate adapter.

Declarations of conformity and notes on driving in different countries

Electromagnetic compatibility

The electromagnetic compatibility of the vehicle components has been checked and certified according to the currently valid version of Regulation UN-R 10.

Country-specific information for regulatory radio components

NOTES ON MODIFICATIONS TO RADIO COMPONENTS
Modifications to radio components may result in the operating permit for the relevant radio components being invalidated. The manufacturer of a radio component will not be held responsible for any such modifications.

NOTES REGARDING THE CROSSING OF NATIONAL BORDERS
You must observe the radio regulatory provisions for the country in which you are currently driving when operating the vehicle.

WIRELESS VEHICLE COMPONENTS
Only for EU and EFTA countries and countries that recognise the EU manufacturer's declaration of conformity:

CE

The following information is valid for all wireless components in the vehicle as well as the information systems and communication devices integrated in the vehicle:

The manufacturers of the wireless components ensure that all wireless components installed in the vehicle conform to Directive 2014/53/EU. The full texts of the EU declarations of conformity are available at the following web address:

https://certificates-of-conformity.corpinter.net/en

Further information is available from any Mercedes-Benz service centre.

ISRAEL ONLY:
It is prohibited to make any change to a vehicle-installed radio component that could affect the wireless specifications of the device, including software changes, replacement of the original antenna, or adding the option to connect the device to an external antenna, without first obtaining approval from the Communica-tions Ministry, because of concern about wireless interference.

UNITED KINGDOM ONLY:

UK CA

The following information is valid for all wireless components in the vehicle as well as the information systems and communication devices integrated in the vehicle:

The manufacturers of the radio components declare that all radio equipment installed in the vehicle is in compliance with the relevant statutory requirements. The full texts of the declarations of conformity are available at the following web address:

https://certificates-of-conformity.corpinter.net/en

JAMAICA ONLY:
All wireless vehicle components have received type approval from the SMA.

FOR COUNTRIES OF THE EURASIAN ECONOMIC UNION ONLY:

The manufacturers of the wireless components installed in the vehicle hereby declare that all wireless components installed in the vehicle conform to the technical regulations for two-way radios. You can obtain further information from any Mercedes-Benz Service Centre.

UKRAINE ONLY:

The manufacturers of the wireless components installed in the vehicle hereby declare that all wireless components installed in the vehicle conform to the technical regulations for two-way radios. Further information is available from any Mercedes-Benz service centre.

Battery

FOR EU COUNTRIES AND COUNTRIES THAT RECOGNISE THE EU MANUFACTURER'S DECLARATION OF CONFORMITY:

For all 48 V and high-voltage vehicle batteries, once the applicable requirements under regulation (EU) 2023/1542 come into effect, the required information will be available at the following web address:

https://certificates-of-conformity.corpinter.net/en

Jack

ONLY FOR EU AND EFTA COUNTRIES AND COUNTRIES THAT RECOGNISE THE EU MANUFACTURER'S DECLARATION OF CONFORMITY:

CE

The following information applies for the jack:

The manufacturer of the jack guarantees that the jack complies with the guideline 2006/42/EC. A complete text of the EU Declaration of Conformity can be obtained by visiting the following website:

https://certificates-of-conformity.corpinter.net/en

You can obtain further information from any Mercedes-Benz service centre.

UNITED KINGDOM ONLY:

UK CA

The following information applies for the jack:

The manufacturer of the jack guarantees that the jack complies with the Supply of Machinery (Safety) Regulations 2008 . A complete text of the UKCA Declaration of Conformity can be obtained by visiting the following website:

https://certificates-of-conformity.corpinter.net/en

Diagnostics connection

The diagnostics connection is a technical interface in the vehicle. It is used, forexample, during repair and maintenance work or for issuing readouts of vehicle data in a specialist workshop. Diagnostic devices should therefore be connected only in a qualified specialist workshop.

WARNING
Risk of accident as a result of connecting devices to the diagnostics connection

If you connect devices to the vehicle's diagnostics connection, functioning of vehicle systems and operational safety can become impaired.

- It is recommended for safety reasons that only products which have been approved by a Mercedes-Benz service centre be used and connected.

WARNING
Risk of accident due to objects in the driver's footwell

Objects in the driver's footwell may impede pedal travel or block a depressed pedal.

This will jeopardise the operating and road safety of the vehicle.

- Stow all objects in the vehicle securely so that they cannot get into the driver's footwell.
- Make sure that there is always sufficient clearance for the pedals.
- Always fit the floor mats securely and as prescribed.
- Do not use loose floor mats and do not place floor mats on top of one another.

NOTE
Battery discharging from using devices connected to the diagnostics connection

Using devices at the diagnostics connection drains the battery.

- Check the charge level of the battery.
- If the charge level is low, charge the battery, e.g. by driving a considerable distance.

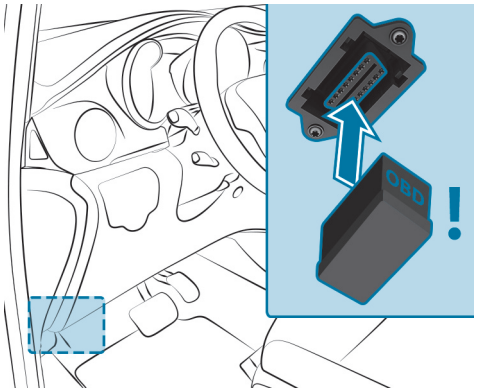

THE CONNECTION AND USE OF ANOTHER DEVICE ON THE DIAGNOSTICS CONNECTION CAN HAVE THE FOLLOWING EFFECTS:

- Malfunctions in the vehicle system
- Permanent damage to vehicle components

Please refer to the warranty terms and conditions regarding this.

In addition, connecting equipment to the diagnostics connection may lead to emissions monitoring information being reset, forexample. This may lead to the vehicle failing to meet the requirements of the next emissions inspection during the main inspection.

Notes on changes to the engine output

OUTPUT INCREASES CAN:

- Change the emission values.
- Lead to malfunctions.
- Result in consequential damage.

The operating safety of the vehicle is not guaranteed in all situations.

IF THE VEHICLE'S ENGINE OUTPUT IS INCREASED:

- The tyres, suspension, brake system and engine cooling system must be adapted to the increased engine output.
- The vehicle must be recertified.
- Report changes in output to the accident insurance body.

This will otherwise lead to the invalidation of the vehicle's general operating permit and its insurance coverage.

If you sell the vehicle, inform the buyer of any alterations to the vehicle's engine output. Otherwise, this may constitute a punishable offence under national law.

Qualified specialist workshop

A qualified specialist workshop has the necessary special skills, tools and qualifications to correctly carry out any necessary work on your vehicle. This particularly applies to safety-critical work.

ALWAYS HAVE THE FOLLOWING WORK ON THE VEHICLE CARRIED OUT AT A QUALIFIED SPECIALIST WORKSHOP:

- Safety-critical work
- Service- and maintenance work
- Repair work
- Modifications as well as installations- and conversions
- Work on electronic components

Mercedes-Benz recommends that you use a Mercedes-Benz service centre for this purpose.

Vehicle registration

Mercedes-Benz may ask its service centres to carry out technical inspections on certain vehicles. The quality or safety of the vehicles is improved as a result of the inspection.

Mercedes-Benz can only inform you about vehicle checks if it has your registration data.

IN THE FOLLOWING CASES, YOUR VEHICLE MAY NOT BE REGISTERED TO YOU YET:

- you did not purchase your vehicle at an authorised specialist dealer.
- your vehicle has not yet been inspected at a Mercedes-Benz service centre.

It is advisable to register your vehicle with a Mercedes-Benz service centre.

Inform Mercedes-Benz as soon as possible about any change in address or vehicle ownership. You can do this at a Mercedes-Benz service centre, for example.

Correct use of the vehicle

If you remove warning stickers, you or others may fail to recognise the dangers. Leave warning stickers in position.

OBSERVE THE FOLLOWING INFORMATION IN PARTICULAR WHEN OPERATING THE VEHICLE:

- Safety notes in these operating instructions
- Technical data for the vehicle
- Traffic rules and -regulations of the country in which you are currently located
- Laws pertaining to motor vehicles and safety standards of the country in which you are currently located
- Radio regulations of the country in which you are currently located

REACH Regulation

EU and EFTA countries only:

The REACH Regulation (Regulation (EC) No. 1907/2006, Article 33) stipulates a duty to supply information about substances of very high concern (SVHCs).

Mercedes-Benz AG acts to the best of its knowledge to prevent these SVHCs from being used and to enable customers to safely handle these substances. According to supplier information and internal product information, there are SVHCs known to Mercedes-Benz AG that are found in individual components of this vehicle in quantities of over 0.1 percent by weight.

FURTHER INFORMATION CAN BE OBTAINED AT THE FOLLOWING ADDRESSES:

- https://reach.mercedes-benz.com/de/home/
- https://reach.mercedes-benz.com/en/home/

Notes for persons with electronic medical aids

Despite meticulous development of their vehicle systems, -Mercedes-Benz AG cannot completely rule out the interaction of vehicle systems with electronic medical aids, suchas cardiac pacemakers.

In addition, there are components built into the vehicle that can generate magnetic fields on a par with permanent magnets, regardless of the operating status of your vehicle. These fields can be found, for example, in the area around the multimedia and sound systems, as well as in the seating area, depending on the respective vehicle equipment.

IT IS THEREFORE POSSIBLE FOR THE FOLLOWING TO OCCUR IN ISOLATED CASES, DEPENDING ON THE AIDS USED:

- medical aids malfunctioning
- adverse health effects

Observe the notes and warnings of the manufacturer of the medical aids; if in doubt, contact the device manufacturer and/or your doctor. If there is continuing uncertainty concerning the possibility of medical aids malfunctioning,-Mercedes-Benz AG recommends using only few electrical vehicle systems and/or maintaining a distance from the components.

ONLY HAVE REPAIRS AND MAINTENANCE WORK IN CLOSE PROXIMITY TO THE FOLLOWING COMPONENTS CARRIED OUT BY A QUALIFIED SPECIALIST WORKSHOP:

- vehicle components carrying live voltage
- transmission aerials
- multimedia system and sound system

If you have any queries or suggestions, consult a qualified specialist workshop.

Implied warranty

NOTE
Damage to the vehicle arising from violation of this Owner's Manual.

Damage to the vehicle can arise from violation of this Owner's Manual.

Such damage is not covered by either the Limited Warranty or the new or used-vehicle warranty.

- Observe the instructions in this Owner's Manual on proper operation of your vehicle as well as regarding possible vehicle damage.

QR codes for rescue card

The QR code stickers are affixed to the B-pillars on the driver's side and front passenger side. In the event of an accident, emergency services can use the QR code to quickly determine the corresponding rescue card for your vehicle. The current rescue card contains the most important information pertaining to your vehicle (e.g.routing of the electric lines) in a compact format.

Additional information can be obtained at: https://rk.mb-qr.com/de/

Data storage

Data processing in the vehicle

ELECTRONIC CONTROL UNITS
Electronic control units are fitted in your vehicle. Control units process data they receive from vehicle sensors, forexample, generate themselves or exchange between themselves. Some control units are required for the safe operation of your vehicle. For example, some assist you when driving, suchas driver assistance systems, while others enable functions serving comfort or infotainment.

The following provides you with general information regarding data processing in the vehicle. Additional information regarding which data in your vehicle are collected, saved and transmitted to third parties and for what purpose can be found in the information directly related to the functional characteristics in question in the respective Owner's Manual. This information is available both online and digitally, depending on the vehicle's equipment.

PERSONAL DATA
A unique vehicle identification number identifies every vehicle. Depending on the country, this vehicle identification number can be used by, forexample, governmental authorities to determine the owner's identity. There are other possibilities for using data collected from the vehicle to identify the owner or driver, suchas the licence plate number.

Therefore, data generated or processed by control units may be attributable to a person or, under certain conditions, become attributable to a person. Depending on which vehicle data are available, it may be possible to make inferences about, forexample, your driving behaviour, location, route or use patterns.

LEGAL REQUIREMENTS REGARDING THE DISCLOSURE OF DATA
If legally required to do so, manufacturers are legally obliged on a case-by-case basis to provide data stored by the manufacturer to governmental entities, upon request and to the extent required. Forexample, this may come into effect during the investigation of a criminal offence.

Governmental entities are themselves authorised to read out data from the vehicle in individual cases and within the applicable legal framework. Following an accident, information that can help with an investigation can be taken from the airbag control unit, forexample.

OPERATIONAL DATA IN THE VEHICLE
Data processed by control units for operation of the vehicle.

THIS INCLUDES THE FOLLOWING DATA, FOREXAMPLE:

- Vehicle status information suchas the speed, longitudinal acceleration, lateral acceleration, number of wheel revolutions or the fastened seat belts display
- Ambient conditions, suchas temperature, rain sensor or distance sensor

Generally, these are short-term data and will not be stored beyond the period of operation, and is only processed within the vehicle itself. Control units, forexample vehicle keys, often contain data memories. Their use permits the temporary or permanent documentation of technical information regarding the vehicle's operating state, component loads, maintenance requirements and technical events or faults.

DEPENDING ON THE TECHNICAL EQUIPMENT, THE FOLLOWING DATA ARE STORED:

- Operating status of system components, suchas fill levels, tyre pressure or battery status
- Faults or defects in important system components, suchas lights or brakes
- System reactions in special driving situations, suchas airbag deployment or the intervention of stability control systems
- Information on events leading to vehicle damage

In certain cases, storing data that would have otherwise been temporary may be required. This may be the case if the vehicle has detected a malfunction, forexample.

If you use services suchas repair services and maintenance work, stored operational data and the vehicle identification number can be read out and used as required. They can be read out from the vehicle by service network employees, suchas those working for workshops, manufacturers or third parties (e.g. breakdown services). The same applies for warranty claims and quality assurance measures.

In general, the readout is performed via the legally prescribed port for the diagnostics connection in the vehicle. The selected operating data document the vehicle's or individual components' technical conditions, help with fault diagnosis, compliance with warranty obligations and quality improvement. To that end, these data, and in particular information pertaining to component loads, technical events, malfunctions and other faults may be transmitted along with the vehicle identification number to the manufacturer. Furthermore, the manufacturer is subject to product liability. For this reason, the manufacturer also uses operational data from the vehicle, forexample, for recalls. These data can also be used to examine the customer's warranty and legal guarantee claims.

Fault memories in the vehicle can be reset by a service outlet or at your request as part of repair or maintenance work.

FUNCTIONS SERVING COMFORT AND INFOTAINMENT
You can store the vehicle's settings for comfort and customisations, and can change or reset them at any time.

DEPENDING ON THE VEHICLE EQUIPMENT, THIS INCLUDES THE FOLLOWING SETTINGS, FOREXAMPLE:

- Seat and steering wheel positions
- Suspension tuning and climate control settings
- Customisation settings, suchas interior lighting

Depending on the selected equipment, you can import data into vehicle infotainment functions yourself.

DEPENDING ON THE VEHICLE EQUIPMENT, THIS INCLUDES THE FOLLOWING DATA, FOREXAMPLE:

- Multimedia data, suchas music, films or photos for playback in an integrated multimedia system
- address book data for use in connection with an integrated hands-free system or an integrated navigation system
- entered navigation destinations
- data for the use of Internet services

These data for functions serving comfort and infotainment may be saved locally in the vehicle or on a device connected to the vehicle, suchas a smartphone, USB flash drive or MP3 player. Data that you have entered yourself can be deleted at any time.

These data are only transmitted from the vehicle to third parties at your request. This applies in particular when using online services from your own selected settings.

SMARTPHONE INTEGRATION (E.G. ANDROID AUTO OR APPLE CARPLAY®)
If your vehicle is equipped accordingly, you can connect your smartphone or another mobile end device to the vehicle. You can then control them through the control elements integrated into the vehicle. Images and audio from the smartphone can be relayed through the multimedia system. Certain information is simultaneously transferred to your smartphone. Depending on the type of integration, thisincludes position data, day/night mode and other general vehicle statuses. For more information, please consult the Owner's Manual for the vehicle or the infotainment system.

This integration allows the use of selected smartphone apps, suchas navigation or music player apps. There is no further interaction between the smartphone and the vehicle; in particular effective access to vehicle data. The type of additional data processing is determined by the provider of the app being used. Permissible settings, if any, will depend on the specific app and your smartphone's operating system.

Online services

WIRELESS NETWORK CONNECTION
If your vehicle has a wireless network connection, data can be exchanged between your vehicle and other systems. The wireless network connection is made possible by the vehicle's own transmitter and receiver or by a mobile end device that you have brought into the vehicle, forexample, a smartphone. Online functions can be used via this wireless network connection. This includes online services and applications/apps provided to you by the manufacturer or by other providers.

MANUFACTURER'S OWN SERVICES
Regarding the manufacturer's online services, the individual functions are described by the manufacturer in a suitable place, forexample, in the Owner's Manual or on the manufacturer's website, where the relevant data protection information is also given. Personal identification data may be used to provide online services. Data is exchanged via a secure connection, e.g. the manufacturer's designated IT systems. Any personal data which are collected, processed and used, other than for the provision of services, is done so exclusively on the basis of legal permission. This is the case, forexample, for a legally prescribed emergency call system, a contractual agreement or when consent has been given.

You can have services and functions, some of which are subject to a fee, activated or deactivated. This excludes legally prescribed functions and services, suchas an emergency call system.

SERVICES OF THIRD PARTIES
If you use online services from other providers (third parties), these services are the responsibility of the provider in question and subject to that provider's data protection conditions and terms of use. As a general rule, the manufacturer has no influence on the content exchanged.

For this reason, when services are provided by third parties, please ask the service provider in question for information about the type, extent and purpose of the collection and use of personal data.

ONBOARD LOGIC UNIT (OLU)
The Onboard Logic Unit (OLU) is available to commercial customers.

It contains control units, including aerials for connection via wireless networks, that permit the exchange of data between your vehicle and other systems. The control units can be used in conjunction with service provided by a third party. Under certaincircumstances, these services may alter the basic configuration of the vehicle and could affect the performance of certain vehicle functions.

For further information about specific services, read the Owner's Manual of the third-party provider. For further information about the Onboard Logic Unit, consult a Mercedes-Benz Service Centre.

If you, yourself, do not own and are not responsible for the vehicle, you may notknow the current status of the Onboard Logic Unit. For further information concerning the services which are currently active, including any data which may be being processed as defined by the GDPR, please contact the person responsible for the vehicle.

Data protection rights

Depending on your country or the equipment and range of functions of your vehicle as well as the services you use and the services on offer, you are entitled to different data protection rights. Further information on data protection and your data protection rights can either be found on the manufacturer's website or you will receive this information as part of the various services and service offers. There, you will also find the contact information for the manufacturer and its data protection officer.

At a workshop, forexample, with the support of a specialist and possibly for a fee, you can have data read out which is stored only locally in the vehicle.

Copyright

Information on licences for free and open-source software used in your vehicle can be found on the data storage medium in your vehicle document wallet and with updates on the following website:

https://www.mercedes-benz.com/opensource

Occupant safety

This interactive PDF works like a website – tap or click a button to jump straight to where you want to go.
You can return here at any time via the navigation bar at the top left.

Brief overview of most important points

Information on the automatic functions of the restraint system

Purpose and function of the restraint system

Seat belts

Airbags

Brief overview of most important points

Basic information

IN PARTICULAR ENSURE THE FOLLOWING CONDITIONS TO ENABLE THE COMPONENTS OF THE RESTRAINT SYSTEM TO UNFOLD THEIR PROTECTIVE POTENTIAL:

- Sit correctly (⟶ page 135).
- Fasten the seat belt correctly (⟶ page 136).
  - Function of the seat belt warning lamp (⟶ page 139).
  - Function of the rear seat belt status display (⟶ page 139).
- The restraint system warning lamp has not gone out after the self-test (⟶ page 139).

FOR CLEAR UNDERSTANDING
The chapter "Occupant safety" includes information on equipment, functions and behaviours that contribute directly to safety of vehicle occupants.

THE INFORMATION IS STRUCTURED AS FOLLOWS:

- **The most important information in brief:** this chapter provides an overview of the relationship between the restraint system and the correct behaviour of all vehicle occupants.
- **Specific information:** further sections in the chapter "Occupant safety" provide specific information on the equipment and functions of the restraint system.

INFORMATION ON THE FOLLOWING SUBJECTS, AMONG OTHERS, IS NOT PROVIDED IN THE CHAPTER "OCCUPANT SAFETY":

- Children in the vehicle (⟶ page 151)
- Driving and driving safety systems (⟶ page 372)
- Stowage areas (⟶ page 593)

DEFINING GENERIC TERMS CLEARLY

IN THESE OPERATING INSTRUCTIONS, THE FOLLOWING GENERIC TERMS ARE USED:

- **Occupant safety:** comprises the following interacting factors which help to keep loads and consequences on the vehicle occupants as low as possible following an accident.
  - the protective effect of the vehicle structure
  - the components of the restraint system and their correct handling
  - correct and risk-minimising behaviour of vehicle occupants

  For the safety of all vehicle occupants, always follow the instructions and warnings in these operating instructions. If necessary, also inform passengers of these.
- **Restraint system:** comprises those components which help prevent vehicle occupants from potentially coming into contact with parts of the vehicle interior. The seat belts and airbags, for example, are components of the restraint system.

- **Child restraint system:** you can find all information on this subject in the chapter "Children in the vehicle" (⟶ page 151).

BE DILIGENT
For the components of the restraint system to provide the intended level of protection, it is essential that you are seated correctly and that the seat belt is correctly secured.

Carelessness regarding the seating position and putting on the seat belt may have serious consequences. Be diligent and make sure that all vehicle occupants are sitting correctly and have fastened their seat belts properly before starting every journey (⟶ page 135).

Information on the correct seat position

The seat position must be correct in order for the components of the restraint system to provide the intended level of protection.

The seat position influences both the protection provided by the seat belt and the additional protection provided by the airbag.

A correct seat position in which the seat is nearly perfectly upright and a correctly fastened seat belt reduce the risks posed by the airbag when it is deployed.

⚠ **WARNING**
Risk of injury- or death due to an incorrect seat position

If you deviate from the correct seat position, the airbag cannot provide its intended protective function.

Each vehicle occupant must make sure of the following.

► Put the seat in the correct position.

► Fasten seat belts correctly.

► Observe the following information.

IN ORDER FOR THE RESTRAINT SYSTEM TO PROVIDE THE INTENDED LEVEL OF PROTECTION, OBSERVE THE FOLLOWING INFORMATION:

- Before starting your journey, adjust your seat correctly (⟶ page 213).

  When doing so, make sure you are able to fasten your seat belt correctly. The shoulder belt strap must be routed forward from the seat belt outlet over the centre of your shoulder.
- Keep your distance from the airbags, especially the front airbags. Set the driver's seat and front passenger seat as far back as possible while making sure the seat belt is fastened correctly.
- If persons are sitting on the rear seats, vehicle occupants should maintain a sufficient distance to the parts of the vehicle interior in front of them.
- Make sure there are no people, animals or objects between the vehicle occupants and an airbag.
- If you are the driver, observe the following information on the correct position of the driver's seat (⟶ page 213).

  Only hold the steering wheel by the steering wheel rim. This allows the driver's airbag to fully deploy.

During pregnancy in particular, it is important to ensure the greatest possible distance from the steering wheel due to the change in the mother's stature and the unborn child.

- Assume a nearly upright sitting posture, with your buttocks positioned as far back as possible in the gap between the seat cushion and the seat backrest.

  Your back must rest as flatly and as firmly as possible against the seat backrest.
- While driving, do not lean forward and do not lean against the door or side window. You may otherwise be in the deployment area of the airbags.
- Sit with your feet resting on the floor, if possible. Your thighs are slightly supported by the seat cushion.

  Do not put your feet on the cockpit, for example. Your feet may otherwise be in the deployment area of the airbag.
- Fasten the seat belt correctly (⟶ page 136).

Notes on wearing the seat belt correctly

Always fasten your seat belt correctly before starting a journey. Only a seat belt which is worn correctly can provide the intended level of protection.

> ⚠ **WARNING**
> Risk of injury or death due to incorrectly fastened seat belt
>
> If the seat belt is not worn correctly, it cannot perform its intended protective function.
>
> In addition, an incorrectly fastened seat belt can also cause injuries, for example, in the event of an accident or when braking or changing direction suddenly.
>
> ► Always ensure that all vehicle occupants have their seat belts fastened correctly and are sitting properly.

> ⚠ **WARNING**
> Risk of injury or death when additional restraint systems are not used for persons with a smaller stature
>
> Persons under 1.50 m tall cannot wear the seat belt correctly without a suitable additional restraint system.
>
> ► Always secure persons under 1.50 m tall in a suitable restraint system.

Observe the following information on the correct seat position and posture (⟶ page 135).

EACH VEHICLE OCCUPANT MUST OBSERVE THE FOLLOWING NOTES IN PARTICULAR:

- The seat belt must not be twisted.
- The shoulder belt strap must be routed forward from the seat belt outlet over the centre of your shoulder.

- The shoulder belt strap should neither touch your neck nor be routed under your arm or behind your back.
- The lap belt must be routed as low down across the hips as possible.

  In addition, push the lap belt down as far as possible across your hips and pull tight with the shoulder belt strap. Never route the lap belt across your abdomen.
- After being tightened, the shoulder belt strap and lap belt must fit snugly against the body.
- Particularly during pregnancy, the instructions for wearing the seat belt correctly must be followed diligently due to the change in the mother's stature and the unborn child (⟶ page 137).
- Avoid wearing bulky clothing, e.g. a winter coat.
- Never route the seat belt across sharp, pointed, abrasive or fragile objects.
- Only one person should use each seat belt at any one time.
- Never secure objects with a seat belt if the seat belt is being used by one of the vehicle's occupants.

  Also ensure that no objects, e.g. cushions, are ever placed between a person and the seat.

If you are driving with a child in the vehicle, observe the information in the chapter "Children in the vehicle" (⟶ page 151).

Observe the instructions for loading the vehicle when securing objects, luggage or loads (⟶ page 593).

Wearing a seat belt during pregnancy

BE DILIGENT

OBSERVE THE FOLLOWING INSTRUCTIONS DILIGENTLY, PARTICULARLY WHEN PREGNANT DUE TO THE CHANGE IN STATURE AND THE UNBORN CHILD:

- Correct seat position and posture
- Wear the seat belt correctly

The correct seat position with a nearly upright sitting posture and a correctly fastened seat belt reduce the risks for the mother and unborn child in the event of an accident.

Particularly when pregnant maintain as large a distance as possible between your stomach and the steering wheel due to the change in your stature and the unborn child.

If you cannot ensure sufficient distance from the steering wheel for safe operation of the vehicle, another person should drive the vehicle.

ⓘ Mercedes-Benz recommends that you seek professional advice, e.g. from a doctor, regarding the possible risks of driving a vehicle when pregnant.

WEARING A SEAT BELT

WHEN PREGNANT OBSERVE THE FOLLOWING INSTRUCTIONS IN PARTICULAR:

- Push the lap belt down as far as possible across your hips and pull it tight with the shoulder belt strap. Never route the lap belt across your stomach when pregnant.
- The shoulder strap should run along the side of your stomach when pregnant.
- Never place objects such as cushions between a person and the seat belt.

Fastening and adjusting seat belts

If the seat belt is pulled quickly or sharply, the seat belt retractor locks. The seat belt strap cannot be pulled out any further.

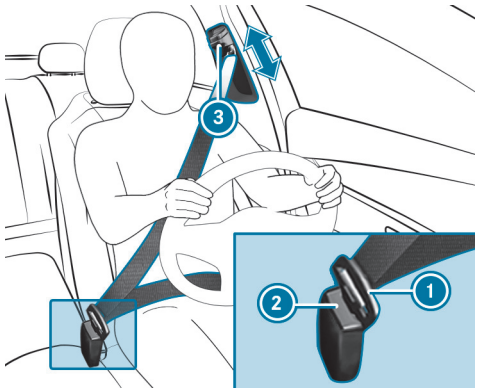

- ► Always engage seat belt tongue ① of the seat belt into seat belt buckle ② of the corresponding seat.
- ► **To adjust the seat belt height:** press button ③ on the seat belt outlet and slide the seat belt outlet to the desired position.
- ► **To engage the seat belt outlet:** release button ③ and ensure that the seat belt outlet engages.

> **NOTE**
> Deployment of components of the restraint system when the front passenger seat is unoccupied and a seat belt is buckled
>
> When the front passenger seat is unoccupied and the seat belt tongue of the seat belt is engaged in the seat belt buckle, components of the restraint system may deploy unnecessarily on the front passenger side, e.g. the seat belt tensioner.
>
> ► Only buckle the seat belts as intended.

Function of the restraint system warning lamp

When the vehicle is switched on, a self-test is performed, during which the restraint system warning lamp lights up. It goes out no later than a few seconds after the vehicle is started. The components of the restraint system are then functional.

A MALFUNCTION HAS OCCURRED IN THE RESTRAINT SYSTEM IN THE FOLLOWING CASES:

- The restraint system warning lamp does not light up or lights up continuously when the vehicle is switched on.
- The restraint system warning lamp lights up continuously or repeatedly during a journey.

If components of the restraint system have been deployed, the restraint system warning lamp lights up continuously.

> **WARNING**
> Risk of injury due to malfunctions in the restraint system
>
> Components in the restraint system may be activated unintentionally or not deploy as intended in an accident.
>
> ► Have the restraint system checked and repaired immediately at a qualified specialist workshop.

Mercedes-Benz recommends that you have the vehicle towed to a qualified specialist workshop.

Function of the seat belt warning lamp

The seat belt warning lamp in the instrument cluster display reminds you that all vehicle occupants must fasten their seat belts correctly.

A warning tone may also sound.

The seat belt warning goes out when the driver's seat belt is fastened. Depending on the vehicle's equipment the seat belt warning may go out as soon as the driver's and front passenger's seat belts are fastened.

Only for certain countries: regardless of whether the driver's seat belt is already fastened, the seat belt warning lamp lights up for six seconds every time the vehicle is switched on. After the vehicle is started, it goes out as soon as the driver's seat belt is fastened.

Function of the rear seat belt status display (crewcab)

The rear seat belt status display is only available for certain countries.

Ensure, both before and during the journey, that all vehicle occupants have their seat belts fastened correctly and are sitting properly.

When the vehicle is switched on, the rear seat belt status display informs you for a certain amount of time which rear seat belt is not fastened.

You can immediately dismiss the rear seat belt status display using the back button on the left-hand side of the steering wheel.

If a vehicle occupant unfastens a seat belt in the rear while the vehicle is motion, the rear seat belt status display appears again.

A warning tone may also sound. In this case you cannot dismiss the rear seat belt status display.

Status display in the instrument cluster (example)

THE STATUS OF THE REAR SEAT BELT CAN BE RECOGNISED BY THE COLOUR OF THE SEAT SYMBOL IN THE INSTRUMENT CLUSTER:

- Grey: rear seat belt fastened
- Orange: rear seat belt not fastened

Information on the child restraint system

When fitting a child restraint system, observe the notes in "Children in the vehicle" (⟶ page 151).

NOTES ON THE CHILD RESTRAINT SYSTEM ON THE FRONT PASSENGER SEAT

WARNING
Risk of injury or fatal injuries if the front passenger airbag is enabled

If the front passenger airbag is enabled, a child on the front passenger seat may be struck by the front passenger airbag during an accident.

► NEVER use a rearward facing child restraint system on a seat protected by an ACTIVE AIRBAG in front of it, DEATH or SERIOUS INJURY to the CHILD can occur.

Also pay particular attention to the notes on rearward-facing or forward-facing child restraint systems on the front passenger seat (⟶ page 156).

Information on the automatic functions of the restraint system

Overview of the automatic measures after an accident

DEPENDING ON THE TYPE AND SEVERITY OF THE ACCIDENT, AND DEPENDING ON THE VEHICLE'S EQUIPMENT, THE FOLLOWING MEASURES CAN BE IMPLEMENTED, FOR EXAMPLE:

- automatic braking (post-collision brake)
- activating the hazard warning lights
- triggering an automatic emergency call (⟶ page 74)
- switching off the engine

  To restart the vehicle, switch the vehicle off and on again (⟶ page 309). Depending on the type and severity of the accident, it may possible that the vehicle can no longer be started.
- switching off the fuel supply
- unlocking the vehicle doors
- lowering the front side windows
- switching on the interior lighting

Function of the post-collision brake after an accident

Depending on the accident situation, the post-collision brake can minimise the severity of a further collision or even avoid it.

If an accident is detected, the post-collision brake can implement automatic braking. When the vehicle has come to a standstill, the electric parking brake is automatically applied.

AUTOMATIC BRAKING CAN BE CANCELLED USING ONE OF THE FOLLOWING ACTIONS:

- braking more strongly than automatic braking
- fully depressing the accelerator pedal with force

Purpose and function of the restraint system

Overview of deployment situations (restraint system)

MAKE SURE THAT THE FOLLOWING PREREQUISITES IN PARTICULAR HAVE BEEN MET, SO THAT THE COMPONENTS OF THE RESTRAINT SYSTEM ARE ABLE TO PROVIDE THE INTENDED LEVEL OF PROTECTION:

- Sit correctly (⟶ page 135).
- Fasten the seat belt correctly (⟶ page 136).
  - Function of the seat belt warning lamp (⟶ page 139).
  - Function of the rear seat belt status display (⟶ page 139).
- The restraint system warning lamp is not on after the self-test (⟶ page 139).

DEPENDING ON THE DETECTED DEPLOYMENT SITUATION, THE COMPONENTS OF THE RESTRAINT SYSTEM CAN BE ACTIVATED OR DEPLOYED INDEPENDENTLY OF ONE ANOTHER:

- Seat belt tensioner: frontal impact, rear impact, side impact[1], overturning[2], rollover[2]
- Driver's airbag, front passenger airbag: frontal impact
- Side airbag: side impact
- Window airbag: side impact, overturning, rollover, frontal impact

[1] Only when the vehicle is fitted with a side airbag or window airbag.

[2] Only when the vehicle is fitted with a window airbag.

The installation location of an airbag is identified by the AIRBAG symbol (⟶ page 149).

Observe the information on the function of the restraint system (⟶ page 142).

Information on how the restraint system works

How the restraint system functions depends on the severity of the impact detected and the apparent type of accident.

For more information about types of accidents, see "Overview of deployment situations" (⟶ page 142).

The activation thresholds for the components of the restraint system are determined based on the evaluation of the sensor values measured at various points in the vehicle. This process is anticipatory in nature. The triggering/deployment of the components of the restraint system must take place in good time at the start of the collision.

Factors which can only be seen and measured after a collision has occurred do not play a decisive role in the deployment of an airbag, nor do they provide an indication of airbag deployment.

The vehicle may be deformed significantly without an airbag being deployed. This is the case if only parts which are relatively easily deformed are affected

and the rate of vehicle deceleration is not high. Conversely, an airbag may be deployed even though the vehicle suffers only minor deformation. If very rigid vehicle parts, such as longitudinal members, are hit, the vehicle deceleration may be high enough for this to happen.

Depending on the apparent type of accident and the detected deployment situation, seat belt tensioners and/or airbags supplement the protection offered by a correctly worn seat belt.

Vehicles with a front passenger bench seat: the seat belt tensioner on the front passenger seat is triggered whether or not the seat belt tongue is engaged in the seat belt buckle.

When enabled, an airbag can provide additional protection for the respective vehicle occupant.

POSSIBLE PROTECTION PER AIRBAG:

- Driver's airbag, front passenger airbag: head and thorax
- Window airbag: head
- Side airbag: thorax and pelvis

However, no system available today can completely eliminate injuries and fatalities in every accident situation. In particular, the seat belt and airbag generally do not protect against objects penetrating the vehicle from the outside. It is also not possible to completely rule out the risk of injury caused by the airbag deploying.

Mercedes-Benz recommends that you have the vehicle towed to a qualified specialist workshop after an accident. Take this into account, particularly if a seat belt tensioner was triggered or an airbag deployed.

IF THE SEAT BELT TENSIONERS ARE TRIGGERED OR AN AIRBAG IS DEPLOYED, YOU WILL HEAR A BANG, AND A SMALL AMOUNT OF POWDER MAY ALSO BE RELEASED:

- The bang will not generally affect your hearing.
- In general, the powder released is not hazardous to health but may cause short-term breathing difficulties to persons suffering from asthma or other pulmonary conditions.

  Provided it is safe to do so, leave the vehicle immediately or open the window in order to prevent breathing difficulties.

Information on the limited protection provided by the restraint system

RISK DUE TO THE INCORRECT BEHAVIOUR OF VEHICLE OCCUPANTS

EVERY VEHICLE OCCUPANT MUST MAKE SURE OF THE FOLLOWING IN PARTICULAR:

- They observe the information on the correct seat position (→ page 135).
- There are no heavy, pointed, sharp-edged or fragile objects in the pockets of their clothing. Stow such objects in a suitable place.

WARNING
Risk of injury or death due to incorrect seat position

The seat belt will not offer the intended level of protection if you have not moved the seat backrest to an almost vertical position.

In particular, you may slip under the seatbelt and injure yourself.

- Adjust the seat properly before beginning your journey.
- Always ensure that the seat backrest is in an almost vertical position and that the shoulder section of your seat belt is routed across the centre of your shoulder.

RISK DUE TO OBJECTS IN THE VEHICLE INTERIOR

EVERY VEHICLE OCCUPANT MUST MAKE SURE OF THE FOLLOWING IN PARTICULAR:

- They observe the information on the correct seat position (→ page 135).
- There are no objects between the seat, door and door pillar (B-pillar).
- There are no hard objects, e.g. coat hangers, hanging on the grab handles or coat hooks.
- There are no heavy, pointed, sharp-edged or fragile objects in the pockets of their clothing. Stow such objects in a suitable place.

To secure objects, luggage or cargo, follow the instructions for loading the vehicle (→ page 593).

WARNING
Risk of injury or death due to blocked seat belt buckle or seat belt anchorage

Objects next to the front seat that block the seat belt buckle or the moving seat belt anchorage on the front seat impair the function of the seat belt tensioners.

- Before starting the journey, make sure that there are no objects around the seat belt buckle or between the front seat and door.

WARNING
Risk of injury from objects in the deployment area of an airbag

Objects in the deployment area of an airbag can hinder or prevent the correct deployment of the airbag.

The airbag may then deploy in an uncontrolled manner and may even cause additional injuries to the vehicle occupants by deploying. This may be the case in particular if the airbag is integrated into the seat.

- Always stow and secure objects correctly.
- Before commencing your journey, make sure that no objects are stowed in the deployment area of an airbag.

The installation location of an airbag is identified by the AIRBAG symbol (→ page 149).

RISK DUE TO FITTING ACCESSORIES

Do not attach accessories such as mobile navigation devices, mobile phones or cup holders within the deployment area of an airbag, e.g. by the cockpit, by the door, by the side window or by the side trim.

In addition, no connecting cables, tensioning straps or retaining straps must be routed or attached to the vehicle within the deployment area of an airbag. Always comply with the accessory manufacturer's installation instructions and, in particular, the notes on suitable places for installation.

WARNING
Risk of injury or death due to unsuitable protective covers

Due to unsuitable protective covers, the airbags cannot protect vehicle occupants as they are designed to do.

► You should only use protective covers that have been approved for the corresponding seat by Mercedes-Benz.

RISK DUE TO PETS IN THE VEHICLE INTERIOR

WARNING
Risk of accident and injury due to animals left unsecured or unattended in the vehicle

If you leave animals in the vehicle unattended or unsecured, they could press buttons or switches, for instance.

AN ANIMAL MAY:

- activate vehicle equipment and become trapped, for example
- switch systems on or off and endanger other road users

Unsecured animals may be thrown about the vehicle in the event of an accident, or sudden steering and braking manoeuvres, and injure vehicle occupants.

► Never leave animals unattended in the vehicle.

► Always correctly secure animals while driving, e.g. using a suitable animal carrier.

RISK DUE TO MODIFICATION, DAMAGE OR WEAR TO THE COMPONENTS OF THE RESTRAINT SYSTEM

⚠ **WARNING**
Risk of injury or death due to modifications to the restraint system

Vehicle occupants may no longer be protected as intended if alterations are made to the restraint system.

- ► Never alter the parts of the restraint system.
- ► Never tamper with the wiring or any electronic component parts or their software.

If it is necessary to adjust the vehicle to accommodate a person with physical disabilities, contact a qualified specialist workshop.

Mercedes-Benz recommends that you only use driving aids which have been approved specifically for your vehicle by Mercedes-Benz.

⚠ **WARNING**
Risk of injury or death due to damaged or modified seat belt system

THE SEAT BELT SYSTEM CANNOT PROVIDE PROTECTION IN THE FOLLOWING SITUATIONS:

- the seat belt is damaged, has been modified, is extremely dirty, bleached or dyed
- the seat belt buckle is damaged or extremely dirty
- modifications have been made to the seat belt tensioner, seat belt anchorage or seat belt retractor

Seat belts may sustain non-visible damage in an accident, for example, due to glass splinters.

Modified or damaged seat belts could tear or fail in the event of an accident, for example.

Modified seat belt tensioners could accidentally trigger or fail to function as intended.

- ► Never modify the seat belt system, for example the seat belt, seat belt buckle, seat belt tensioner, seat belt anchorage and seat belt retractor.
- ► Make sure the seat belts are undamaged, not worn and clean.
- ► Always have the seat belt system checked immediately after an accident at a qualified specialist workshop.

Mercedes-Benz recommends that you use seat belts which have been approved for your vehicle by Mercedes-Benz.

WARNING
Risk of injury due to modifications to the cover of an airbag

If you modify the cover of an airbag or affix objects such as stickers to it, the airbag can no longer function as intended.

- Never modify the cover of an airbag.
- Do not attach any objects to the cover.

The installation location of an airbag is identified by the AIRBAG symbol (⟶ page 149).

WARNING
Risk of injury due to malfunctioning sensors in the door

The function of the airbags can be impaired due to modifications or incorrect work performed on the doors or door trim, or if the doors are damaged.

- Never modify the doors or parts of the doors.
- Always have work on the doors or door trim carried out at a qualified specialist workshop.

RISK DUE TO COMPONENTS OF THE RESTRAINT SYSTEM WHICH HAVE ALREADY BEEN DEPLOYED

Mercedes-Benz recommends that you have the vehicle towed to a qualified specialist workshop after an accident.

WARNING
Risk of burns from hot airbag components

The airbag parts are hot after an airbag has been deployed.

- Do not touch the airbag parts.
- Have a deployed airbag replaced at a qualified specialist workshop as soon as possible.

WARNING
Risk of injury due to deployed airbag

A deployed airbag no longer offers any protection.

- Have the vehicle towed to a qualified specialist workshop in order to have the deployed airbag replaced.

Have deployed airbags replaced immediately.

WARNING
Risk of injury or death from deployed pyrotechnic seat belt tensioners

Pyrotechnic seat belt tensioners that have been deployed are no longer operational and are unable to perform their intended protective function.

- Therefore, have deployed pyrotechnic seat belt tensioners immediately replaced at a qualified specialist workshop.

Seat belts

Releasing the seat belts

- Press the release button in the seat belt buckle and guide the seat belt back with the seat belt tongue.

NOTE
Damage caused by trapping the seat belt

If an unused seat belt is not fully retracted, it may become trapped in the door or in the seat mechanism.

- Always ensure that an unused seat belt is fully retracted.

Airbags

Overview of airbags

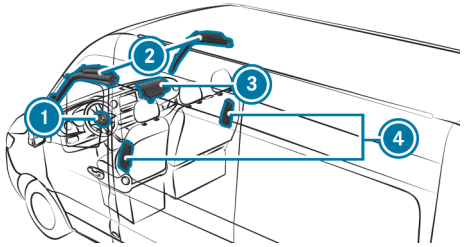

1. Driver's airbag
2. Window airbag
3. Front passenger airbag
4. Side airbag

The installation location of an airbag is identified by the AIRBAG symbol.

Observe the information in "Overview of deployment situations" (⟶ page 142).

Children in the vehicle

This interactive PDF works like a website – tap or click a button to jump straight to where you want to go.
You can return here at any time via the navigation bar at the top left.

Brief overview of most important points

Important safety notes

Suitable child restraint systems for the transport of children

Suitable seats for attaching child restraint systems

Securing the child restraint system

Child safety locks

Brief overview of most important points

Safely carrying children in the vehicle

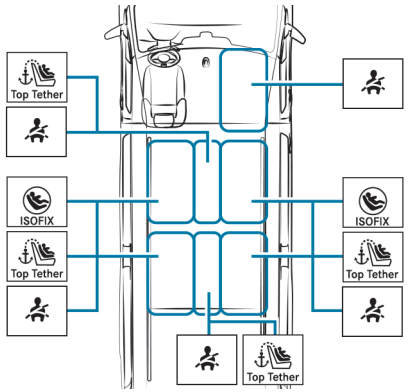

Example: vehicle with 2nd/3rd seat row

ALWAYS OBSERVE THE FOLLOWING WHEN CARRYING CHILDREN:

- Never leave children unattended in the vehicle (⟶ page 154).
- Properly secure children up to a height of 1.50 m or under 12 years of age on the appropriate seat with a suitable and approved child restraint system (⟶ page 157), and secure infants in a rear-facing child restraint system.
- Observe the child restraint system manufacturer's installation instructions.

LEFT/RIGHT REAR SEAT (PREFERRED SEATS)
PREFERRED ATTACHMENT SYSTEM:

ISOFIX/LATCH mounting bracket (⟶ page 165)

and

Also attach Top Tether if available (⟶ page 167).

ALTERNATIVE ATTACHMENT SYSTEM:

Seat belt on vehicle seat (⟶ page 167)

Additionally attach Top Tether if recommended by the manufacturer of the child restraint system (⟶ page 167).

The following child restraint systems within the Universal category are approved: U, UF, IUF. Please see the other alternatives for use (⟶ page 161).

FRONT PASSENGER SEAT
ATTACHMENT SYSTEM:

Seat belt on vehicle seat (⟶ page 167)

The following child restraint systems within the Universal category are approved: U, UF. Please see the other alternatives for use (⟶ page 161).

REAR CENTRE SEAT

ATTACHMENT SYSTEM:

Seat belt on vehicle seat (⟶ page 167)

Additionally attach Top Tether if recommended by the manufacturer of the child restraint system (⟶ page 167).

The following belt-secured child restraint systems within the Universal category are approved: U, UF. Please see the other alternatives for use (⟶ page 167).

Important safety notes

Basic information

BE DILIGENT
Bear in mind that negligence when securing a child in the child restraint system can have serious consequences. Always be diligent and secure a child carefully before each journey.

Infants and children must never travel sitting on the lap of a vehicle occupant.

TO IMPROVE PROTECTION FOR CHILDREN UNDER 12 YEARS OF AGE OR LESS THAN 1.50 M IN HEIGHT, MERCEDES-BENZ RECOMMENDS THAT YOU MAKE SURE YOU OBSERVE THE FOLLOWING INFORMATION:

- Always secure the child in a child restraint system suitable for this Mercedes-Benz vehicle.
- The child restraint system must be appropriate to the age, weight and size of the child.
- The vehicle seat must be suitable for the child restraint system to be fitted:
  - ISOFIX/LATCH mounting bracket (⟶ page 165)
  - Securing with the seat belt of the vehicle seat (⟶ page 161)

Accident statistics show that children secured on the rear seats are generally safer than children secured on the front seats. For this reason, Mercedes-Benz strongly advises that you fit a child restraint system to a rear seat if there are rear seats.

THE GENERIC TERM CHILD RESTRAINT SYSTEM

THE GENERIC TERM CHILD RESTRAINT SYSTEM IS USED IN THESE OPERATING INSTRUCTIONS. A CHILD RESTRAINT SYSTEM CAN BE E.G.:

- an infant carrier
- a rear-facing child seat
- a front-facing child seat
- a child booster seat – Mercedes-Benz recommends using a child booster seat **with** a seat backrest and seat belt guide.

OBSERVE LAWS AND REGULATIONS
Always observe the legal requirements when using a child restraint system in the vehicle.

Make sure that the child restraint system is approved in accordance with the valid test specifications and guidelines. You can obtain further information at a qualified specialist workshop. Mercedes-Benz recommends that you use a Mercedes-Benz Service Centre for this purpose.

ATTACHMENT SYSTEMS FOR CHILD RESTRAINT SYSTEMS IN THE VEHICLE

ONLY USE THE FOLLOWING ATTACHMENT SYSTEMS FOR CHILD RESTRAINT SYSTEMS:

- the ISOFIX/LATCH mounting bracket
- the seat belt system of the vehicle
- the Top Tether anchorages

Easy attachment to the ISOFIX/LATCH mounting bracket on the vehicle can reduce the risk of fitting the child restraint system incorrectly.

When securing a child with the integrated seat belt of the ISOFIX/LATCH child restraint system, always comply with the permissible gross weight for the child and child restraint system (⟶ page 165).

Important warning notices

ALWAYS SECURE A CHILD RESTRAINT SYSTEM CORRECTLY

> ⚠ **WARNING**
> Risk of injury or death due to incorrect installation of the child restraint system
>
> The child can then not be protected or restrained as intended.
>
> ► Be sure to comply with the manufacturer's installation instructions for the child restraint system and its correct use.
>
> ► Make sure that the entire base of the child restraint system always rests on the sitting surface of the seat.
>
> ► Never place objects (e.g. cushions) under or behind the child restraint system.
>
> ► Use child restraint systems only with the original cover designed for them.
>
> ► Always replace damaged covers with genuine covers.

- Always observe the vehicle-specific information.
  - Fitting the ISOFIX/LATCH child restraint system on the rear seat (⟶ page 165).
  - Securing the child restraint system with the seat belt (⟶ page 167).
- Observe the warning labels in the vehicle interior and on the child restraint system.

> ⚠ **WARNING**
> Risk of injury or death due to unsecured child restraint systems in the vehicle
>
> If the child restraint system is incorrectly fitted or not secured, it can become detached.
>
> The child cannot then be protected or restrained as intended.
>
> The unused child restraint system can be become detached and strike vehicle occupants.
>
> ► Always comply with the manufacturer's installation instructions for the child restraint system and its correct use.
>
> ► Always fit child restraint systems correctly, even if they are transported unused in the vehicle.

DO NOT MODIFY THE CHILD RESTRAINT SYSTEM

WARNING
Risk of injury due to modifications to the child restraint system

The child restraint system can no longer function properly. This poses an increased risk of injury.

- Never modify a child restraint system.
- Only affix accessories which have been specially approved for this child restraint system by the child restraint system's manufacturer.

ONLY USE CHILD RESTRAINT SYSTEMS WHICH ARE IN PROPER WORKING CONDITION

WARNING
Risk of injury or death caused by the use of damaged child restraint systems

Child restraint systems or their retaining systems that have been subjected to stress in an accident may not be able to perform their intended protective function.

It may be the case that the child cannot be properly restrained.

- Always immediately replace child restraint systems that have been damaged or involved in an accident.
- Have the securing systems for the child restraint systems checked at a qualified specialist workshop before installing a child restraint system again.

AVOID DIRECT SUNLIGHT

WARNING
Risk of burns when the child seat is exposed to direct sunlight

If the child restraint system is exposed to direct sunlight or heat, parts could heat up.

Children could suffer burns from these parts, particularly on metallic parts of the child restraint system.

- Always make sure that the child restraint system is not exposed to direct sunlight.
- Protect the child restraint system with a blanket, for example.
- If the child restraint system has been exposed to direct sunlight, allow it to cool before securing a child into it.
- Never leave children unattended in the vehicle.

OBSERVE WHEN STOPPING OR PARKING

WARNING
Risk of fatalities due to exposure to extreme heat- or cold in the vehicle

If persons – and in particular children – are exposed to solar radiation, or the effects of heat or cold for prolonged periods of time, there is a risk of sustaining injuries or even fatalities!

- Never leave people – especially children – unattended in the vehicle.

WARNING
Accident– and risk of injury with unsupervised children in the vehicle

IF YOU LEAVE CHILDREN UNATTENDED IN THE VEHICLE, THEY CAN IN PARTICULAR

- Open doors and thereby endanger other persons or road users.
- get out of the car and are hit by traffic.
- Operate vehicle equipment and become trapped, forexample.

IN ADDITION, THE CHILDREN COULD ALSO SET THE VEHICLE IN MOTION, FOR EXAMPLEBY:

- releasing the parking brake.
- change the gearbox setting.
- start the vehicle.

▶ Never leave children unattended in the vehicle.

▶ When leaving the vehicle, always take the SmartKey with you and lock the vehicle.

▶ Keep the key out of reach of children.

Important notes on rearward-facing child restraint systems on the co-driver seat

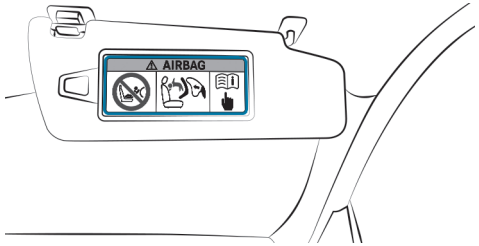

Warning notice on the co-driver sun visor

The front passenger airbag cannot be disabled. This is indicated by a special sticker on the co-driver's side of the cockpit.

Always fit a rearward-facing child restraint system on a suitable rear seat, but never on the co-driver seat.

NEVER use a rearward-facing child restraint system on a seat with an ENABLED FRONT AIRBAG. This can result in DEATH or SERIOUS INJURIES to children.

Always observe the information on the safe transportation of children (⟶ page 153) .

Suitable child restraint systems for the transport of children

Approval categories for child restraint systems

ONLY USE APPROVED CHILD RESTRAINT SYSTEMS

ONLY CHILD RESTRAINT SYSTEMS WITH THE FOLLOWING UNECE STANDARDS ARE APPROVED FOR USE IN THE VEHICLE:

- UN-R44
- UN-R129 (i-Size child restraint systems)

IDENTIFICATION ON THE CHILD RESTRAINT SYSTEM

Information pertaining to the approval category, weight category and approval number, forexample, is provided on the approval label on the child restraint system.

This may include additional information suchas the ISOFIX size category, depending on the approval category of the child restraint system.

Approval categories under UN-R44

Example of an approval label

- **Universal:** child restraint systems in the "Universal" category are approved for installation in vehicles. They can be used in seats marked U, UF or IUF, according to the overviews of the suitability of seats for securing child restraint systems.

  The IUF label refers to ISOFIX/LATCH child restraint systems in the "Universal" category. These child restraint systems must also be secured using a top tether or support points.
- **Semi-Universal:** child restraint systems in the "Semi-Universal" category may only be used if the vehicle and vehicle seat are listed in the child restraint system manufacturer's vehicle model list.
- **Vehicle-specific:** child restraint systems in the "Vehicle-specific" category may only be used if the vehicle and vehicle seat are listed in the child restraint system manufacturer's vehicle model list.

APPROVAL CATEGORY UNDER UN-R129

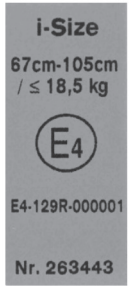

Example of an approval label

- **i-Size:** child restraint systems in the "i-Size" category are approved for installation in vehicles with i-Size mounting brackets. They can be used on seats marked with i-U according to the overviews of the suitability of seats for securing child restraint systems.

  The i-U label refers to i-Size child restraint systems in the "Universal" category. These child restraint systems must also be secured using a top tether or support points.

PLEASE ENSURE SUITABILITY OF THE VEHICLE SEATS

DEPENDING ON THE APPROVAL CATEGORY, THERE ARE FORWARD-FACING AND/OR REARWARD-FACING CHILD RESTRAINT SYSTEMS. THEIR USE MAY BE RESTRICTED FOR CERTAIN VEHICLE SEATS.

- Suitability of seats for attaching ISOFIX/LATCH child restraint systems (⟶ page 161)
- Suitability of seats for attaching belt-secured child restraint systems (⟶ page 161)

Overview of recommended child restraint systems

ⓘ Further information on the correct child restraint system can be obtained at a qualified specialist workshop. Mercedes-Benz recommends that you use a Mercedes-Benz Service Centre for this purpose.

SECURING WITH ISOFIX

WEIGHT CATEGORY 0+ (UP TO 13 KG AND UP TO APPROX. 15 MONTHS)

Type[1]	BABY SAFE plus (including base)
Size categories	E
Approval	E1 04 301 146
Order number[2]	B6 6 86 8224
1 Manufacturer: Britax Römer	2 With colour code 9H95

WEIGHT CATEGORY I (9 TO 18 KG AND FROM APPROXIMATELY 9 MONTHS TO 4 YEARS)

Type[1]	DUO plus
Size categories	B1
Approval	E1 04 301 133
Order number[2]	A 000 970 43 02
1 Manufacturer: Britax Römer	2 With colour code 9H95

SECURING WITH THE SEAT BELT ON THE VEHICLE SEAT

WEIGHT CATEGORY 0 (UP TO 10 KG AND APPROXIMATELY 6 MONTHS) AND WEIGHT CATEGORY 0+ (UP TO 13 KG AND APPROXIMATELY 15 MONTHS)

Type[1]	BABY SAFE plus II
Approval	E1 04 301 146
Order number[2]	A 000 970 38 02
1 Manufacturer: Britax Römer	2 With colour code 9H95

R129 CHILD RESTRAINT SYSTEMS (WEIGHT UP TO 13 KG, SIZE 40 TO 83 CM AND AGE FROM BIRTH TO APPROX. 15 MONTHS)

Type[1]	Baby Safe 3 i-Size
Size categories	R2
Approval	E1*129R03/04*0060*02
Order number	A 000 970 68 02
1 Manufacturer: Britax Römer	

WEIGHT CATEGORY I (9 TO 18 KG AND FROM APPROXIMATELY 9 MONTHS TO 4 YEARS)

Type[1]	DUO plus
Approval	E1 04 301 133
Order number[2]	A 000 970 43 02
1 Manufacturer: Britax Römer	2 With colour code 9H95

WEIGHT CATEGORY II/III (15 TO 36 KG AND FROM APPROX. 3 TO 12 YEARS) (KIDFIX XP)

Type[1]	KIDFIX XP
Approval	E1 04 301 304
Order number[2]	A 000 970 49 02
1 Manufacturer: Britax Römer	2 With colour code 9H95

WEIGHT CATEGORY II/III (15 TO 36 KG AND FROM APPROX. 3 TO 12 YEARS) (AMG KIDFIX XP)

Type[1]	AMG KIDFIX XP
Approval	E1 04 301 304
Order number[2]	A 000 970 33 02
1 Manufacturer: Britax Römer	2 With colour code 9H95

R129 CHILD RESTRAINT SYSTEMS (WEIGHT 15 TO 36 KG, SIZE 100 TO 150 CM AND AGE FROM APPROX. 3.5 TO 12 YEARS) (KIDFIX M I-SIZE)

Type[1]	KIDFIX M i-Size
Size categories	B2
Approval	E1*129R03/04*0061*02
Order number	A 000 970 89 02
1 Manufacturer: Britax Römer	

R129 CHILD RESTRAINT SYSTEMS (WEIGHT 15 TO 36 KG, SIZE 100 TO 150 CM AND AGE FROM APPROX. 3.5 TO 12 YEARS) (AMG KIDFIX M I-SIZE)

Type[1]	AMG KIDFIX M i-Size
Size categories	B2
Approval	E1*129R03/04*0061*02
Order number	A 000 970 91 02

1 Manufacturer: Britax Römer

Suitable seats for attaching child restraint systems

Overview of suitability of the seats for attaching ISOFIX/LATCH child restraint systems

ISOFIX IS A STANDARDISED FASTENING SYSTEM FOR SPECIAL RESTRAINT SYSTEMS:

The symbol indicates seats suitable for attaching an ISOFIX/LATCH child restraint system in accordance with UN-R44 (→ page 157).

Attach only child restraint systems which are approved in accordance with UN-R44.

Overview of the suitability of seats for attaching belt-secured child restraint systems

Suitability of seats for fastening belt-secured child restraint systems:

REAR SEATS

Weight category 0: up to 10 kg	
Rear bench seat (crewcab)	U
Rear bench seat (standard/comfort)	U
Weight category 0+: up to 13 kg	
Rear bench seat (crewcab)	U
Rear bench seat (standard/comfort)	U
Weight category I: 9 to 18 kg	
Rear bench seat (crewcab)	U
Rear bench seat (standard/comfort)	U
Weight category II: 15 to 25 kg	
Rear bench seat (crewcab)	U
Rear bench seat (standard/comfort)	U
Weight category III: 22 to 36 kg	
Rear bench seat (crewcab)	U
Rear bench seat (standard/comfort)	U

U Suitable for child restraint systems of the "Universal" category in this weight category.

NOTES ON CHILD RESTRAINT SYSTEMS ON THE FRONT PASSENGER SEAT

- If it is absolutely necessary for you to fit a child restraint system to the front passenger seat, be sure to observe the information on child restraint systems on the front passenger seat (→ page 156).

FRONT PASSENGER SEAT

Weight category 0: up to 10 kg	
Front passenger seat (with front passenger airbag)[1]	X
Front passenger seat (without front passenger airbag)[1]	U
Single seat	X
Weight category 0+: up to 13 kg	
Front passenger seat (with front passenger airbag)[1]	X
Front passenger seat (without front passenger airbag)[1]	U
Single seat	X
Weight category I: 9 to 18 kg	
Front passenger seat (with front passenger airbag)[1]	UF
Front passenger seat (without front passenger airbag)[1]	U
Single seat	X
Weight category II: 15 to 25 kg	
Front passenger seat (with front passenger airbag)[1]	UF
Front passenger seat (without front passenger airbag)[1]	U
Single seat	X
Weight category III: 22 to 36 kg	
Front passenger seat (with front passenger airbag)[1]	UF
Front passenger seat (without front passenger airbag)[1]	U
Single seat	X

X Not suitable for children in this weight category.

U Suitable for child restraint systems of the "Universal" category in this weight category.

UF Suitable for front-facing child restraint systems of the "Universal" category in this weight category.

1 Set the front passenger seat to its rearmost and highest position.

FRONT PASSENGER BENCH SEAT

Weight category 0: up to 10 kg	
Outer seat (with front passenger airbag)	X
Outer seat (without front passenger airbag)	U
Centre seat	X
Weight category 0+: up to 13 kg	
Outer seat (with front passenger airbag)	X
Outer seat (without front passenger airbag)	U
Centre seat	X
Weight category I: 9 to 18 kg	

Outer seat (with front passenger airbag)	UF
Outer seat (without front passenger airbag)	U
Centre seat	X
Weight category II: 15 to 25 kg	
Outer seat (with front passenger airbag)	UF
Outer seat (without front passenger airbag)	U
Centre seat	X
Weight category III: 22 to 36 kg	
Outer seat (with front passenger airbag)	UF
Outer seat (without front passenger airbag)	U
Centre seat	X

X Not suitable for children in this weight category.

U Suitable for child restraint systems of the "Universal" category in this weight category.

UF Suitable for front-facing child restraint systems of the "Universal" category in this weight category.

Securing the child restraint system

Adjusting the seat correctly

WHEN INSTALLING A CHILD RESTRAINT SYSTEM ON THE LEFT OR RIGHT-HAND REAR SEAT, ALWAYS OBSERVE THE FOLLOWING:

- Make sure that the child's feet do not touch the front seat. If necessary, move the front seat slightly forward.

If the head restraint of the child restraint system cannot be fully extended when it is installed in the vehicle, this will result in restrictions on the maximum size setting for certain child restraint systems. Observe the child restraint system manufacturer's installation instructions.

> Contact with the roof when the head restraint is fully extended and locked in place will not result in any restrictions on use.

WHEN FITTING AN ISOFIX/LATCH CHILD RESTRAINT SYSTEM, ALSO OBSERVE THE FOLLOWING:

- **When using a rear-facing child restraint system on a rear seat:** adjust the front seat in such a way as to ensure that it is not touching the child restraint system.
- **When using a front-facing child restraint system with integrated child seat belt:** adjust the head restraint of the respective seat so that it cannot push the child restraint system forward. If necessary, the respective head restraint can be removed. In addition, the seat backrest of the child restraint system must lie as flat as possible against the backrest of the vehicle seat. After the child restraint system has been removed, immediately replace the vehicle head restraint and adjust correctly.
- The child restraint system must not be put under strain between the roof and the seat surface and/or be fitted facing the wrong direction. Where possible, adjust the seat cushion inclination accordingly.
- Adjust the vehicle head restraints so that the child restraint system is not put under strain by the head restraint.

WHEN INSTALLING A BELT-SECURED CHILD RESTRAINT SYSTEM, ALSO OBSERVE:

- **When using a rear-facing child restraint system on a rear seat:** adjust the front seat in such a way as to ensure that it is not touching the child restraint system.
- **When using a front-facing child restraint system with integrated child seat belt:** adjust the head restraint of the respective seat so that it cannot push the child restraint system forward. If necessary, the respective head restraint can be removed. In addition, the seat backrest of the child restraint system must lie as flat as possible against the backrest of the vehicle seat. After the child restraint system has been removed, immediately replace the vehicle head restraint and adjust correctly.
- Ensure that the seat backrest of front-facing child restraint system is lying as flat as possible against the backrest of the rear seat.

- The child restraint system must not be put under strain between the roof and the seat surface and/or be fitted facing the wrong direction. Where possible, adjust the seat cushion inclination accordingly.
- Adjust the vehicle head restraints so that the child restraint system is not put under strain by the head restraint.
- Make sure that the child's feet do not touch the front seat. If necessary, move the front seat slightly forward.

DEPENDING ON THE VEHICLE EQUIPMENT, ALWAYS OBSERVE THE FOLLOWING WHEN INSTALLING A BELT-SECURED CHILD RESTRAINT SYSTEM ON THE FRONT PASSENGER SEAT:

- Observe the notes on rearward-facing child restraint systems on the front passenger seat (→ page 156).
- **When using a front-facing child restraint system with integrated child seat belt:** remove the head restraint from the respective seat, if possible. After the child restraint system has been removed, immediately replace the head restraint and adjust correctly.
- Ensure that the seat backrest of front-facing child restraint system is lying as flat as possible against the backrest of the front passenger seat.
- The child restraint system must not be put under strain between the roof and the seat surface and/or be fitted facing the wrong direction.
- Adjust the vehicle head restraints so that the child restraint system is not put under strain by the head restraint.
- Never place objects (e.g. cushions) under or behind the child restraint system.
- Set the front passenger seat as far back as possible and move the seat into the highest position possible. Always make sure that the shoulder belt strap is correctly routed from the seat belt outlet of the vehicle to the shoulder belt guide on the child restraint system. The shoulder belt strap must be routed forwards from the seat belt outlet and, where possible, downwards to the child restraint system.
- Fully retract the seat cushion length adjustment.
- Set the seat cushion inclination in such a way that the front edge of the seat cushion is in the highest position and the rear edge of the seat cushion is in the lowest position.
- Set the seat backrest to the most vertical position possible.

Fitting an ISOFIX/LATCH child restraint system on the rear seat

WARNING
Risk of injury or death if the permissible gross mass of the child and child restraint system together is exceeded.

Too much load may be placed on the ISOFIX or iSize child restraint systems and the child may not be restrained correctly in the event of an accident, for example.

- If the child is secured in an ISOFIX child restraint system with integrated seat belt, the total mass of the child and child restraint system must not exceed 33 kg.

ALWAYS COMPLY WITH THE INFORMATION ABOUT THE MASS OF THE CHILD RESTRAINT SYSTEM:

- in the installation instructions and Owner's Manual for the child restraint system used

- on a label on the child restraint system, if present

Regularly check continued compliance with the permissible gross mass of the child and child restraint system.

WHEN YOU INSTALL A CHILD RESTRAINT SYSTEM, OBSERVE THE FOLLOWING:

☑ Always observe the correct use and suitability of the seats for attaching a child restraint system.

ISOFIX/LATCH child seat anchor (⟶ page 161)

☑ Always observe the installation instructions and Owner's Manual for the child restraint system used.

☑ Make sure that the child's feet do not touch the front seat. If necessary, move the front seat slightly forward.

WHEN FITTING AN ISOFIX/LATCH CHILD RESTRAINT SYSTEM, ALSO OBSERVE THE FOLLOWING:

☑ **When using a weight category 0/0+ baby car seat and a weight category I rearward-facing child restraint system on a rear seat:** adjust the rear and/or front seat so that the front seat does not touch the child restraint system.

☑ **When using a weight category I forward-facing child restraint system:** the backrest of the child restraint system must lie as flat as possible against the backrest of the seat.

☑ For certain child restraint systems in weight category II or III, there may be restrictions on the maximum size setting, e.g. owing to possible contact with the roof.

☑ The child restraint system must not be put under strain between the roof and the seat surface and/or be fitted facing the wrong direction.

☑ Do not put the child restraint system under load from the head restraint. Adjust the head restraints as appropriate.

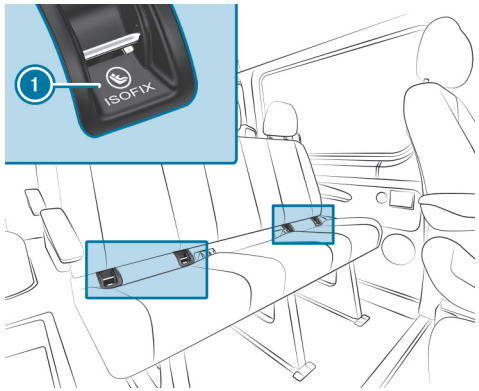

(1) ISOFIX mounting bracket

Before every journey, make sure that the ISOFIX/LATCH child restraint system is engaged correctly in both mounting brackets in the vehicle.

> **NOTE**
> Damage to the seat belt for the centre seat during installation of the child restraint system
>
> ▶ Make sure that the seat belt is not trapped.

▶ Attach the ISOFIX/LATCH child restraint system to both mounting brackets (1) in the vehicle.

Securing Top Tether

WARNING
Risk of injury due to incorrect attachment of the Top Tether belt

If you attach the Top Tether belt incorrectly, the child restraint system is not properly secured and therefore cannot protect as intended.

- Attach the Top Tether hook only to the intended Top Tether anchorage.

If the child restraint system is equipped with a Top Tether belt:

The risk of injury can be reduced by Top Tether. The Top Tether belt enables an additional connection between the child restraint system attached with ISOFIX and the vehicle.

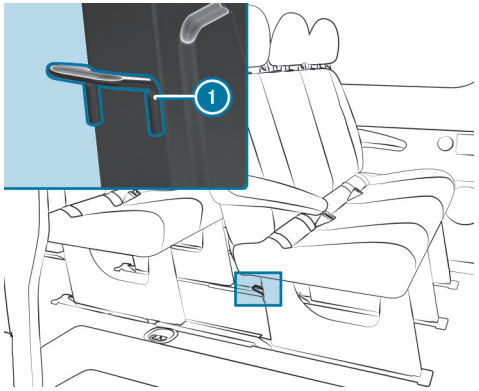

Top Tether anchorages 1 are located on the back of the rear bench seat on the bench seat legs.

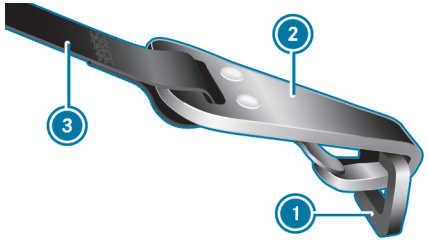

- If necessary, move the head restraint upwards (→ page 233).
- Fit the ISOFIX child restraint system with Top Tether. Comply with the child restraint system manufacturer's installation instructions.
- Guide Top Tether belt 3 under the head restraint between the two head restraint bars.
- Hook Top Tether hook 2 into Top Tether anchorage 1 without twisting.
- Tension Top Tether belt 3. Comply with the child restraint system manufacturer's installation instructions.
- If necessary, slide the head restraint downwards (→ page 233). Make sure that you do not interfere with the correct routing of Top Tether belt 3.

Fastening the child restraint system with the seat belt

- For a child restraint system in the "Universal" or "Semi-Universal" category, make sure that the system has been approved for the vehicle seat.

- Install the child restraint system.

  The entire base of the child restraint system must always rest on the sitting surface of the seat.

- Always make sure that the shoulder belt strap is correctly routed from the seat belt outlet of the vehicle to the shoulder belt guide on the child restraint system.

  The shoulder belt strap must be routed forwards from the seat belt outlet and, where possible, downwards to the child restraint system.

- If necessary, adjust the seat belt outlet and the front passenger seat as appropriate.

Child safety locks

Activating or deactivating child safety locks for the sliding doors

WARNING
Accident– and risk of injury with unsupervised children in the vehicle

IF YOU LEAVE CHILDREN UNATTENDED IN THE VEHICLE, THEY CAN IN PARTICULAR

- Open doors and thereby endanger other persons or road users.
- get out of the car and are hit by traffic.
- Operate vehicle equipment and become trapped, forexample.

IN ADDITION, THE CHILDREN COULD ALSO SET THE VEHICLE IN MOTION, FOR EXAMPLEBY:

- releasing the parking brake.
- change the gearbox setting.
- start the vehicle.

► Never leave children unattended in the vehicle.

► When leaving the vehicle, always take the SmartKey with you and lock the vehicle.

► Keep the key out of reach of children.

WARNING
Risk of fatalities due to exposure to extreme heat- or cold in the vehicle

If persons – and in particular children – are exposed to solar radiation, or the effects of heat or cold for prolonged periods of time, there is a risk of sustaining injuries or even fatalities!

► Never leave people – especially children – unattended in the vehicle.

WARNING
Risk of accident and injury due to children left unattended in the vehicle

IF CHILDREN ARE TRAVELLING IN THE VEHICLE, THEY COULD, IN PARTICULAR:

- open doors, thereby endangering other persons or road users
- get out and be struck by oncoming traffic
- operate vehicle equipment and become trapped, for example

► Always activate the child safety locks installed if children are travelling in the vehicle.

► Never leave children unattended in the vehicle.

► When leaving the vehicle, always take the key with you and lock the vehicle.

THE FOLLOWING DOORS FEATURE CHILD SAFETY LOCKS:

- Sliding doors
- Rear doors on a crewcab

The child safety locks on the doors secure each door separately. The doors can no longer be opened from the inside (except the electric sliding door). The door can be opened from the outside when the vehicle is unlocked.

The electric sliding door can be opened any time using the button in the centre console.

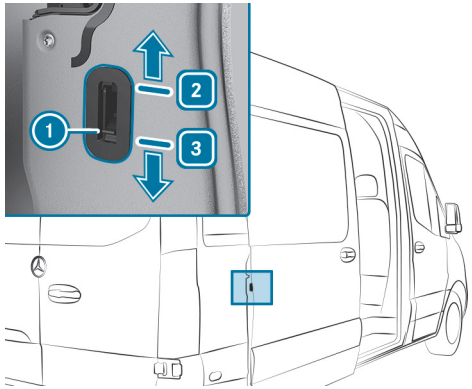

Example: sliding door child safety lock

► Slide the child safety lock latch (1) into position [2] (secure) or [3] (unlock).

► Ensure that the child safety locks are working properly.

Back to Contents

Opening and closing

This interactive PDF works like a website – tap or click a button to jump straight to where you want to go.
You can return here at any time via the navigation bar at the top left.

Key
Doors
Sliding door
Electric sliding door
Rear-end doors
Partition sliding door
Electrical step
Platform dropsides
Side window
Anti-theft protection

Key

Notes on the key's radio connections

DANGER
Risk of fatal injury to persons with medical devices due to electromagnetic radiation when using the start/stop button

Persons with medical devices, e.g. pacemakers or defibrillators:

There is a radio connection between the key and the vehicle.

The function of a medical device can be impaired.

► Before operating the vehicle, consult your doctor or the manufacturer of the medical device about any possible effects from such systems.

DETECTION RANGE OF KEYLESS-START FUNCTION ANTENNA

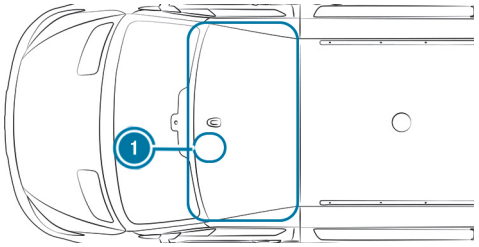

1 Position of key holder when the antenna detection range is reduced (→ page 311)

Overview of key functions

WARNING
Accident– and risk of injury with unsupervised children in the vehicle

IF YOU LEAVE CHILDREN UNATTENDED IN THE VEHICLE, THEY CAN IN PARTICULAR

- Open doors and thereby endanger other persons or road users.
- get out of the car and are hit by traffic.
- Operate vehicle equipment and become trapped, forexample.

IN ADDITION, THE CHILDREN COULD ALSO SET THE VEHICLE IN MOTION, FOR EXAMPLEBY:

- releasing the parking brake.
- change the gearbox setting.
- start the vehicle.

► Never leave children unattended in the vehicle.

► When leaving the vehicle, always take the SmartKey with you and lock the vehicle.

► Keep the key out of reach of children.

NOTE
Damage to the key caused by magnetic fields
► Keep the key away from strong magnetic fields.

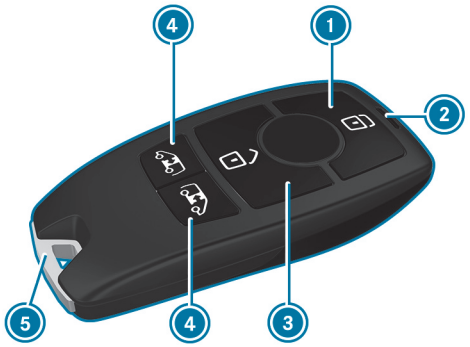

1. To lock
2. Indicator lamp
3. To unlock
4. To unlock the load compartment (sliding doors and rear-end doors)/to unlock and open/close the electric sliding doors
5. Emergency key

THE KEY'S FACTORY SETTING ENABLES YOU TO CENTRALLY LOCK AND UNLOCK THE FOLLOWING COMPONENTS:

- the driver's door and front passenger door
- the sliding doors
- the rear-end doors

ⓘ If you do not open the vehicle within approximately 40 seconds of unlocking, the vehicle will lock again and anti-theft protection will be primed again.

Do not store the key together with electronic devices or metallic objects. This could impair the key's functionality.

ⓘ If the indicator lamp ② does not light up when you press the button 🔓 or 🔒, the battery is discharged.

Replace the key battery (→ page 175).

Activating/deactivating the acoustic locking verification signal

Multimedia system:

→ 🏠 ▸▸ Settings ▸▸ Vehicle ▸▸ Open/close

► Switch the Acoustic lock on or off.

ⓘ **Please note:**
The selected setting for the acoustic locking verification signal must comply with the applicable national road traffic rules. In some countries, including Germany, using the acoustic locking verification signal is prohibited by traffic laws (under §16 Para. 1 and §30 Para. 1 of the German National Road Traffic Regulations). The driver of the vehicle must comply with these regulations. In countries where use of the function is prohibited, this function is not activated in the vehicle and activation is not permitted.

Changing the unlocking settings

THE KEY HAS THE FOLLOWING ADJUSTABLE UNLOCKING FUNCTIONS:

- unlocking the vehicle centrally
- unlocking the driver's door (vehicles without partition or with cab)
- unlocking the driver's door and front passenger door (vehicles with partition)

► **To switch between settings:** press and hold the buttons [🔓] and [🔒] at the same time for approximately six seconds until the indicator lamp flashes twice.

► **To unlock the vehicle centrally when the unlocking function is selected for the driver's door or the driver's and front passenger door:** press the [🔓] button a second time.

Reducing energy consumption of the key

DEACTIVATE KEY FUNCTION

If you do not use the vehicle or a key for an extended period of time, you can also deactivate the function of the key to reduce energy consumption of the respective key.

► Press and hold the key button [🔒].

► With the key button [🔒] pressed, immediately press the key button [🔓] twice in quick succession.

The indicator lamp of the key lights up once briefly and then again for a longer period.

ACTIVATE THE KEY FUNCTION

► Press any button on the key.

ⓘ If the key in the storage compartment is in emergency operation mode for start-up, the key function is activated automatically (⟶ page 311).

Removing and inserting the emergency key

REMOVING

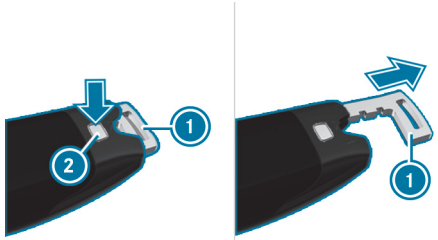

► Press the release knob ②.

The emergency key ① is pushed out slightly.

► Pull the emergency key ① out completely.

INSERTING

► Press the release knob ②.

► Slide the emergency key ① in completely until it engages .

ⓘ The Anti-Theft Alarm system (ATA) is triggered when you unlock and open the vehicle using the emergency key (⟶ page 208).

Replacing the key battery

DANGER
Risk of fatal injury due to swallowing batteries

Batteries contain toxic and corrosive substances. If batteries are swallowed or otherwise enter the body, severe internal burns can occur within two hours.

There is a risk of fatal injury!

- Keep the batteries out of the reach of children.
- If the lid and/or the battery compartment do not close securely, stop using the key and keep it away from children.
- If batteries are swallowed or otherwise enter the body, seek immediate medical attention.

ENVIRONMENTAL NOTE
Environmental damage due to improper disposal of batteries

Batteries contain pollutants. It is illegal to dispose of them with the household rubbish.

- Dispose of batteries in an environmentally responsible manner. Take discharged batteries to a qualified specialist workshop or to a collection point for used batteries.

Requirements:

- You need a CR 2032 lithium cell battery (3 V).

Mercedes-Benz recommends that you have the battery replaced by a qualified specialist workshop.

- Remove the emergency key (→ page 174).

Example image

- Press the release knob 2 all the way down and slide open the cover 1.
- Pull out the battery compartment 3 and remove the flat battery.
- Insert the new battery into the battery compartment 3. Observe the positive terminal marking in the battery compartment and on the battery.
- Insert the battery compartment 3.
- Re-attach the cover 1 and push it closed until it engages.
- Slide the emergency key in completely until it engages (→ page 174).

Rectifying problems with the key

YOU CAN NO LONGER LOCK OR UNLOCK THE VEHICLE.
POSSIBLE CAUSES:

- The key battery is at low capacity or is flat.

► Check the battery via the indicator lamp (⟶ page 172).

► Replace the key battery as required (⟶ page 175).

► Use the replacement key.

► Use the emergency key to lock and unlock the vehicle (⟶ page 182).

► Have the key checked at a qualified specialist workshop.

THERE IS INTERFERENCE FROM A POWERFUL RADIO SIGNAL SOURCE.
POSSIBLE CAUSES IF THE FUNCTION OF THE KEY IS IMPAIRED:

- high voltage power lines
- mobile phones
- electronic devices (notebooks, tablets)
- shielding due to metal objects or induction loops for electrical gate systems or automatic barriers

► Ensure that there is sufficient distance between the key and the potential source of interference.

YOU HAVE LOST A KEY.

► Have the key deactivated at a qualified specialist workshop.

► If necessary, have the locks changed as well.

Doors

Notes on the additional door lock

The additional door lock is only available in vehicles for the United Kingdom.

> ⚠ **WARNING**
> Risk of injury to persons inside the vehicle when the additional door lock is activated
>
> If the additional door lock is activated, the doors can no longer be opened from the inside.
>
> ► Never leave persons, in particular children, unattended in the vehicle.
>
> ► If there are persons in the vehicle, do not activate the additional door lock.

THE ADDITIONAL DOOR LOCK IS AUTOMATICALLY ACTIVATED:

- after the vehicle has been locked with the key

You can deactivate the additional door lock by deactivating the interior protection (⟶ page 210).

> ⓘ The additional door lock is inoperative on vehicles without interior protection.

Unlocking and opening the door from inside

United Kingdom only: observe the notes on the additional door lock (⟶ page 177).

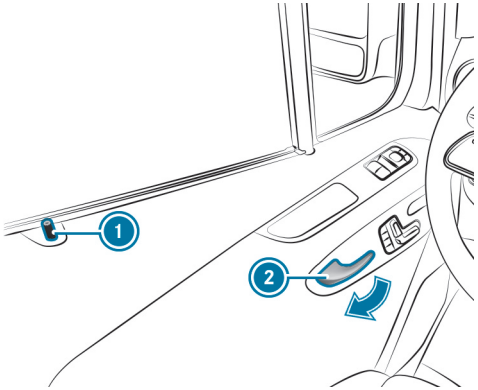

► **To unlock and open the front door:** pull the door handle ②.
The safety pin ① pops up when the door is unlocked.

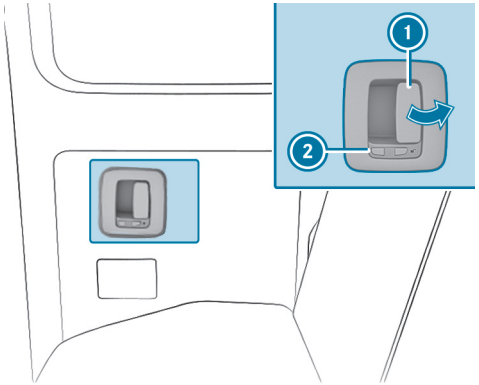

The symbol indicates that the rear door is unlocked.

- **To unlock and open the rear door:** pull the opening lever (1) and open the rear door.
  When the door unlocks, the catch (2) moves forward.
  The symbol is visible.
- **To close:** pull the rear door closed using the door handle.
- **To lock:** slide back the catch (2).
  The symbol is visible.

Centrally locking and unlocking the door from the inside

WARNING
Accident- and risk of injury with unsupervised children in the vehicle

IF YOU LEAVE CHILDREN UNATTENDED IN THE VEHICLE, THEY CAN IN PARTICULAR

- Open doors and thereby endanger other persons or road users.
- get out of the car and are hit by traffic.
- Operate vehicle equipment and become trapped, forexample.

IN ADDITION, THE CHILDREN COULD ALSO SET THE VEHICLE IN MOTION, FOR EXAMPLEBY:

- releasing the parking brake.
- change the gearbox setting.
- start the vehicle.

- Never leave children unattended in the vehicle.
- When leaving the vehicle, always take the SmartKey with you and lock the vehicle.
- Keep the key out of reach of children.

WARNING
Risk of fatalities due to exposure to extreme heat- or cold in the vehicle

If persons – and in particular children – are exposed to solar radiation, or the effects of heat or cold for prolonged periods of time, there is a risk of sustaining injuries or even fatalities!

- Never leave people – especially children – unattended in the vehicle.

You can use the central locking buttons to centrally lock and unlock the entire vehicle from the inside.

The central locking buttons are located in the driver's door.

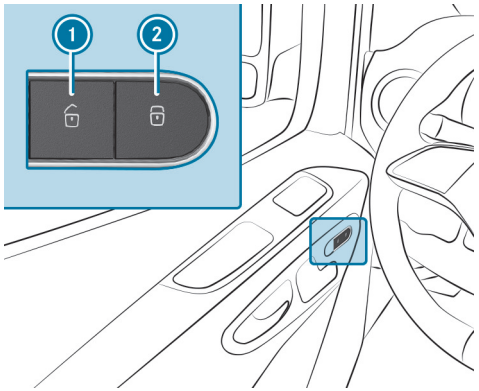

Central locking buttons (vehicles with electrically adjustable front seats)

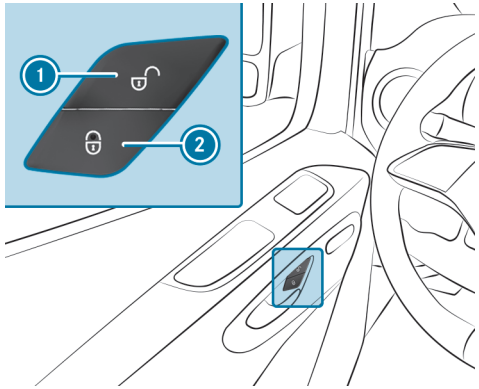

Central locking buttons (vehicles with manually adjustable front seats)

- **To unlock:** with the doors closed, press the button 1.
- **To lock:** with the doors closed, press the button 2.

Activating/deactivating the automatic lock

Requirements:

- The power supply or the vehicle has been switched on.
- The doors are closed.

When the automatic lock is activated and the vehicle is travelling at a speed above 15 km/h, the vehicle is locked automatically.

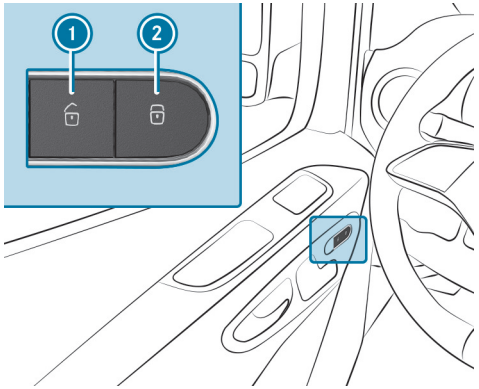

Central locking buttons (vehicles with electrically adjustable front seats)

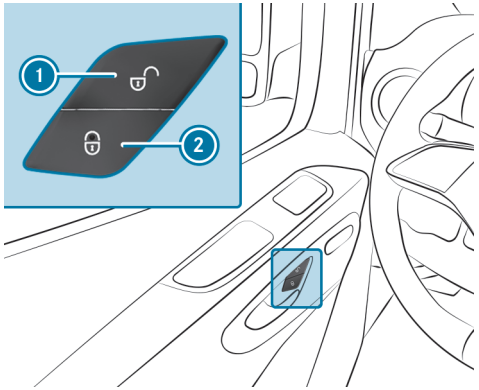

Central locking buttons (vehicles with manually adjustable front seats)

If the vehicle is being tow started, push-started or tested on a roller dynamometer, there is a risk of being locked out when the function is activated.

- **To activate:** press and hold the button (2) until you hear an acoustic signal.
- **To deactivate:** press and hold the button (1) until you hear an acoustic signal.

Activating or deactivating the automatic locking function via the multimedia system

Multimedia system:

Settings ▸▸ Vehicle ▸▸ Open/close

ⓘ The vehicle is locked automatically when the vehicle is switched on and the wheels are turning faster than walking pace.

- Activate or deactivate Automatic locking.

IN THE FOLLOWING SITUATIONS THERE IS A RISK OF BEING LOCKED OUT WHEN THE FUNCTION IS ACTIVATED:

- The vehicle is being towed or pushed.
- If the vehicle is being tested on a roller dynamometer.

Automatic locking after closing the last door

⚠ **WARNING**
Risk of fatalities due to exposure to extreme heat- or cold in the vehicle

If persons – and in particular children – are exposed to solar radiation, or the effects of heat or cold for prolonged periods of time, there is a risk of sustaining injuries or even fatalities!

- Never leave people – especially children – unattended in the vehicle.

WARNING
Accident– and risk of injury with unsupervised children in the vehicle

IF YOU LEAVE CHILDREN UNATTENDED IN THE VEHICLE, THEY CAN IN PARTICULAR

- Open doors and thereby endanger other persons or road users.
- get out of the car and are hit by traffic.
- Operate vehicle equipment and become trapped, forexample.

IN ADDITION, THE CHILDREN COULD ALSO SET THE VEHICLE IN MOTION, FOR EXAMPLEBY:

- releasing the parking brake.
- change the gearbox setting.
- start the vehicle.

▶ Never leave children unattended in the vehicle.

▶ When leaving the vehicle, always take the SmartKey with you and lock the vehicle.

▶ Keep the key out of reach of children.

WARNING
Accident- and risk of injury with unsecured or unattended animals in parked vehicle

If you leave animals in the vehicle unattended or unsecured, they could possiblypress buttons or switches.

AN ANIMAL MAY:

- Activate vehicle equipment and become trapped, for example.
- Switch systems on or- off and endanger other road users

▶ Never leave animals in the vehicle unattended.

▶ Always secure animals properly, e.g. with a suitable animal transport box.

After leaving the vehicle and closing the last door, the vehicle is automatically locked. This also applies if the key is still in the vehicle.

There is a risk of locking oneself out. The vehicle can only be opened again with a vehicle key.

- Always carry the vehicle key with you when leaving the vehicle.

ⓘ If the vehicle is locked and the only available key is in the vehicle, notify a qualified specialist workshop.

Warning information according to the respective version of driver's door, partition or sliding door

Unlocking and locking the driver's door with the emergency key

ⓘ If you want to lock the vehicle completely with the emergency key, press the button for the locking mechanism from inside first with the driver's door open. Then lock the driver's door with the emergency key.

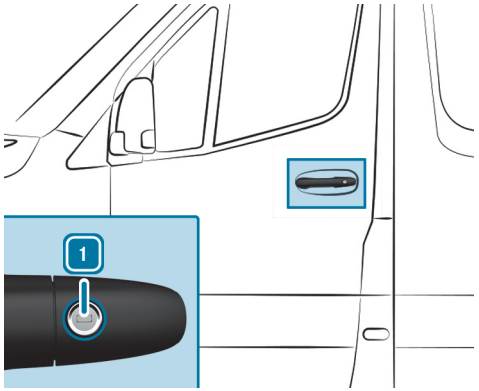

- **To unlock:** turn the emergency key anti-clockwise to position 1.
- **To lock:** turn the emergency key clockwise to position 1.

ⓘ **Right-hand drive vehicles:** turn the emergency key in the opposite direction for each case.

Using the grab handles when getting into and out of the vehicle

The entrances may be equipped with grab handles and steps. The grab handles to enter and exit the vehicle are located at the front door and the sliding door.

ⓘ **TO AVOID RISKS:**

- Always use the grab handles and steps when getting into and out of the vehicle. These are specifically designed to withstand such loads.
- Keep steps and entrances free from dirt, e.g. mud, clay, snow and ice.

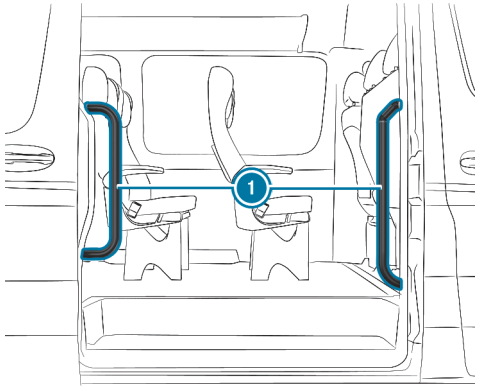

Getting into and out of the vehicle (example: sliding door)

- When getting into and out of the vehicle, use the grab handles (1) and steps.

> The grab handles on the sliding door are provided as an easy entry and exit feature and can hold up to a maximum of 80 kg. Do not use the grab handle on the sliding door to secure a load (lashing). Do not secure any objects to the easy entry and exit features.

Sliding door

Opening/closing the sliding door from the outside

WARNING
Risk of becoming trapped due to an open sliding door which is not engaged in place

On an incline, the sliding door can move by itself.

This can cause you or other people to become trapped.

- Always make sure that the open sliding door is engaged. To do so, open the sliding door to the stop.

WARNING
Risk of becoming trapped due to sliding door opening towards the rear

When you open the sliding door, the sliding door could hit other people as it moves towards the rear of the vehicle.

- Only open the sliding door when traffic conditions permit.

Requirements:

- The vehicle is unlocked.

TO OPEN

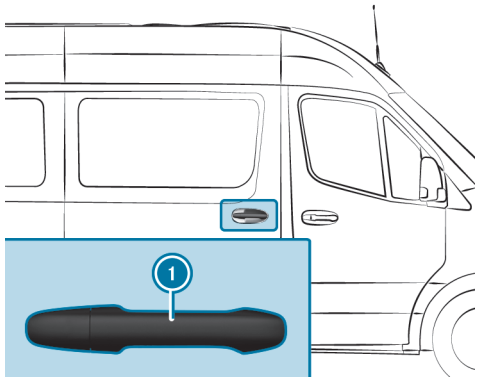

- Pull the door handle (1).
  The sliding door opens.
- Push back the sliding door using the door handle (1) until it engages.
- Ensure that the sliding door is fully engaged by gently pulling on the door.

If your vehicle features a long sliding door with intermediate locking, the sliding door can be locked in approximately the middle position. This will allow you to access or exit the vehicle without having to always open the sliding door completely to its end position. The sliding door is not fully engaged when in the intermediate catch position.

TO CLOSE

- Pull the door handle (1).
  The sliding door is released from its locking mechanism.
- Push the sliding door firmly forwards using the door handle (1) and close.

Opening/closing the sliding door from the inside

> ⚠ **WARNING**
> Risk of becoming trapped due to an open sliding door which is not engaged in place
>
> On an incline, the sliding door can move by itself.
>
> This can cause you or other people to become trapped.
>
> - Always make sure that the open sliding door is engaged. To do so, open the sliding door to the stop.

> ⚠ **WARNING**
> Risk of becoming trapped due to sliding door opening towards the rear
>
> When you open the sliding door, the sliding door could hit other people as it moves towards the rear of the vehicle.
>
> - Only open the sliding door when traffic conditions permit.

Requirements:

- The child safety lock is deactivated.

TO OPEN

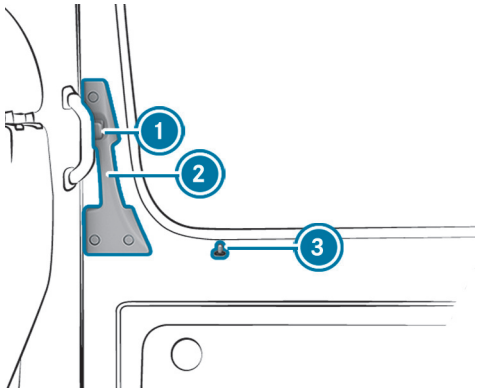

> ⓘ If your vehicle features a long sliding door with intermediate locking, the sliding door can be locked in approximately the middle position. This will allow you to access or exit the vehicle without having to always open the sliding door completely to its end position. The sliding door is not fully engaged when in the intermediate catch position.

- Press the button (1).
  The safety pin (3) is raised and all doors are unlocked.
- Push back the sliding door using the door handle (2) until it engages.
- Ensure that the sliding door is fully engaged by gently pulling on the door.

TO CLOSE

- Press the button ①.
  The sliding door is released from its locking mechanism.
- Slide the sliding door firmly forwards using the door handle ② until it closes.

Notes on electrical closing assist

If your vehicle is fitted with electrical closing assist, less force will be required to close the sliding door.

Electric sliding door

Function of the electric sliding door

Your vehicle may feature electric sliding doors on the left and/or right-hand side.

YOU CAN OPEN AND CLOSE THE SLIDING DOOR WITH THE FOLLOWING CONTROL ELEMENTS:

- Sliding door buttons on the centre console
- Sliding door button on the door sill (B-pillar)
- Door handle (inside or outside)
- Key

If the electric sliding door is obstructed while opening, it moves a few centimetres in the opposite direction and stops.

If the sliding door is obstructed while closing, it opens fully again.

If the electric motor of the sliding door is in danger of overheating, e.g. due to frequent opening and closing within a short period of time, the sliding door opens fully. The sliding door is then locked in place. The sliding door is operational again after approximately 30 seconds.

In the event of a fault or if the battery has been disconnected, you can use the unlocking mechanism to disconnect the sliding door from the electric motor. You can then open or close the sliding door manually (⟶ page 190).

Opening/closing the electric sliding door with the button

WARNING
Risk of becoming trapped due to sliding door opening towards the rear

When you open the sliding door, the sliding door could hit other people as it moves towards the rear of the vehicle.

► Only open the sliding door when traffic conditions permit.

WARNING
Risk of injury despite the object detection function

The object detection function does not react to soft, light and thin objects, such as fingers. The object detection function cannot prevent someone from becoming trapped in these situations.

► When opening and closing the electric sliding door, make sure that no parts of the body are within the operating range of the sliding door.

► If someone becomes trapped, press the button again to stop the sliding door.

Object recognition:

If an object obstructs the sliding door as it closes, the sliding door will be stopped. Object recognition is provided solely as an aid. It is not a substitute for you having to pay attention.

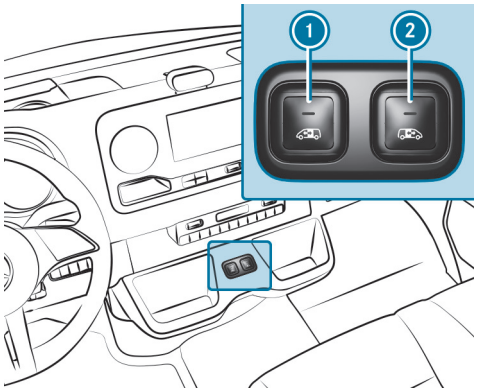

1 Sliding door button for the left sliding door
2 Sliding door button for the right sliding door

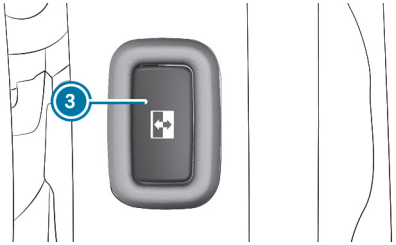

3 Sliding door button on the door sill (B-pillar)

For vehicles with partition, the button 3 is situated on the partition next to the door sill at the height of the door handle.

You can only open the sliding door with the button 3 if the child safety lock is deactivated.

- **To open:** press the button 1, 2 or 3 briefly.
  The sliding door opens automatically.
  When opening with the buttons 1 or 2, two acoustic signals are also sounded.
  The indicator lamp in buttons 1 or 2 flashes and the button 3 flashes.
  If the sliding door is fully opened, the indicator lamp in buttons 1 or 2 lights up.
- **To close:** press the button 1, 2 or 3 briefly.
  The sliding door closes automatically.
  When closing with buttons 1 or 2, two acoustic signals are also sounded.
  The indicator lamp in buttons 1 or 2 flashes and the button 3 flashes.
  If the sliding door is fully closed, the indicator lamp in the buttons 1 or 2 goes out.
- **To stop automatic operation:** briefly press button 1 or 2.
  The sliding door stops.

ⓘ When you stop automatic operation during opening of the door, the door closes when you press the button again.

ⓘ In less favourable operating conditions, e.g. frost or ice, or if the vehicle is very dirty, you can press and hold the corresponding button. The electric sliding door moves with increased force. Please note that the object recognition function will then be less sensitive. To stop the movement, release the button.

Opening and closing the electric sliding door with the key

- **To unlock:** briefly press the buttons or on the key.
- **To open/close:** hold the buttons or on the key pressed for longer than 0.5 seconds.

  Two acoustic signals are sounded and the sliding door opens or closes automatically.
- **To interrupt automatic operation:** press the buttons or on the key briefly.

  The sliding door stops.

> ⓘ If automatic operation is interrupted during the opening process, the door closes if the button is pressed again.

Opening/closing the electric sliding door using the door handle

Requirements:

- The child safety lock is deactivated.

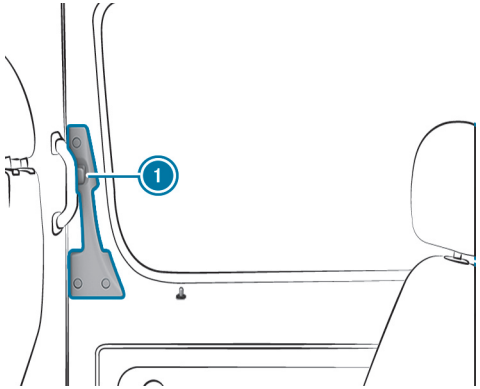

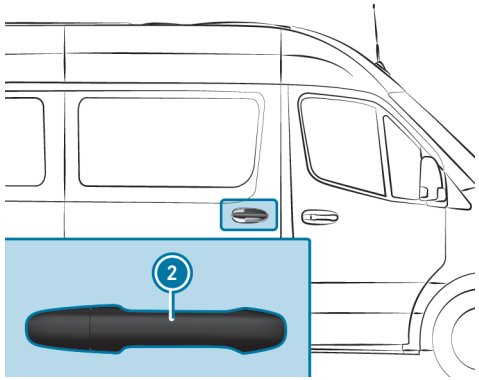

- **To open/close:** press the button 1 or pull on the door handle 2.

  The sliding door opens or closes.
- **To interrupt automatic operation:** press the button 1 again or pull on the door handle 2.

  The sliding door stops.

Unlocking the electric sliding door manually

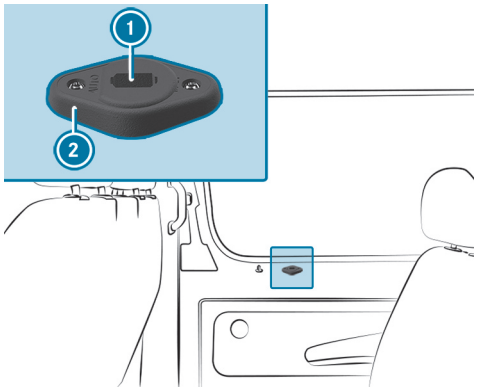

In the event of a fault or if the battery has been disconnected, you can use the battery disconnect switch ② to disconnect the sliding door from the electric motor. You can then open or close the sliding door manually.

ⓘ For further information on removing the emergency key (⟶ page 174).

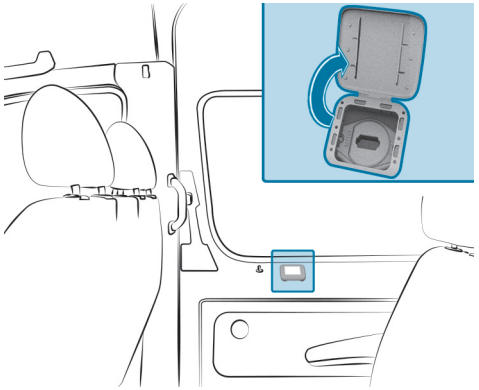

Cover in sliding door trim

- **Vehicles with sliding door trim:** lift up the cover of the battery disconnect switch ②.

  The battery disconnect switch is now accessible.

DISCONNECTING THE SLIDING DOOR FROM THE ELECTRIC MOTOR

- Insert the emergency key into the opening ① of the battery disconnect switch ② in the "AUTO" position.
- Turn the emergency key 180° clockwise.

  The "MAN" position is set.
- Open or close the sliding door with the outside or inside door handle.

ESTABLISHING THE CONNECTION BETWEEN SLIDING DOOR AND ELECTRIC MOTOR

- Insert the emergency key into the opening ① of the battery disconnect switch ② in the "MAN" position.
- Turn the emergency key 180° anti-clockwise.

  The "AUTO" position is set.
- Adjust the sliding door (⟶ page 191).
- If it is not possible to rectify the fault, consult a qualified specialist workshop.

Resetting the electric sliding door

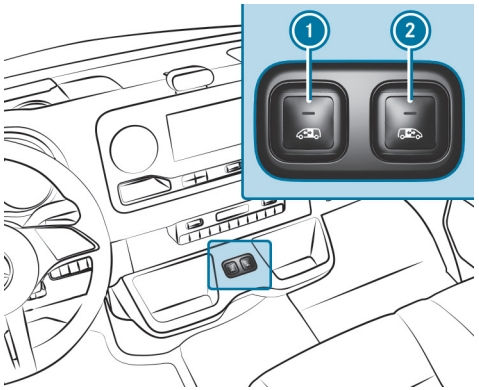

Sliding door buttons on the centre console

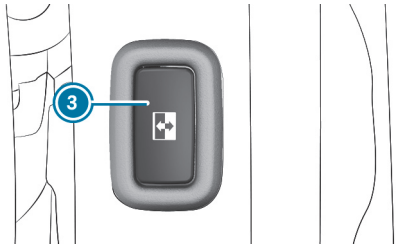

Sliding door button on the door sill (B-pillar)

You must reset the sliding door in the event of a fault or voltage drop.

- If the sliding door is open: hold the button 1 or 2 on the centre console or the sliding door button 3 pressed on the door sill (B-pillar) until the door closes.

or

- Close the sliding door using the door handle (→ page 189).
- Then briefly press the button 1 or 2 on the centre console, or the sliding door button 3 on the door sill (B-pillar) once, or pull the door handle (→ page 189) to open the sliding door completely.

  The sliding door is operational.

Rear-end doors

Opening/closing the rear-end doors from the outside

DANGER
Risk of poisoning from exhaust gases

Combustion engines emit poisonous exhaust gases such as carbon monoxide. Exhaust gases can enter the vehicle interior if the rear-end door is open when the engine is running, especially if the vehicle is in motion.

- ► Always switch off the engine before opening the rear-end door.
- ► Never drive with the rear-end door open.

WARNING
Danger of accidents due to concealed lighting systems

If you open the rear doors by 90°, the rear lighting systems are concealed.

other road users cannot see the vehicle or can see it only with difficulty

- ► Therefore, in these or similar cases, secure the vehicle in accordance with national regulations, e.g. with the warning triangle.

WARNING
Risk of injury due to the rear-end door swinging open

WHEN YOU OPEN A REAR-END DOOR, THE FOLLOWING CAN OCCUR:

- You or another person can be injured.
- A person may be struck by oncoming traffic.

This is particularly the case if you open the rear-end door more than 90° or if it opens in an uncontrolled manner.

Even rear-end doors which are properly closed can swing open when the vehicle parked is on an incline or it is windy.

- ► Only open a rear-end door when the traffic conditions and surroundings permit.
- ► Always make sure that the rear-end doors are properly closed.

NOTE
Damage to the rear-end doors due to objects obstructing their range of movement

When the rear-end doors are opened, any objects obstructing the range of movement of the rear-end doors can be damaged as well as the vehicle.

- Make sure that there is sufficient clearance when opening the rear-end doors.

OPENING THE RIGHT-HAND REAR-END DOOR

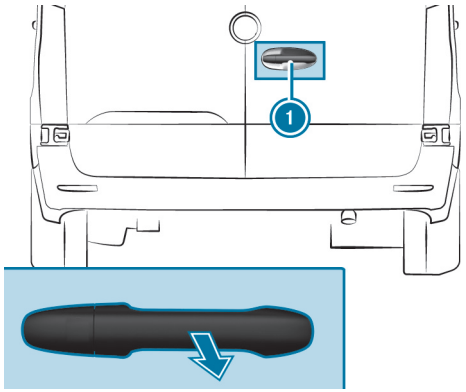

Depending on the respective version of vehicle, the rear-end doors can be locked at an angle of approximately 90° and 270° (side wall).

- Pull the door handle (1).
- Swing the rear-end door to the side until it engages at approximately 90°or 270°.

Depending on the respective version of vehicle, the rear-end doors can be opened beyond 90°, even with door check (→ page 194).

OPENING THE LEFT-HAND REAR-END DOOR

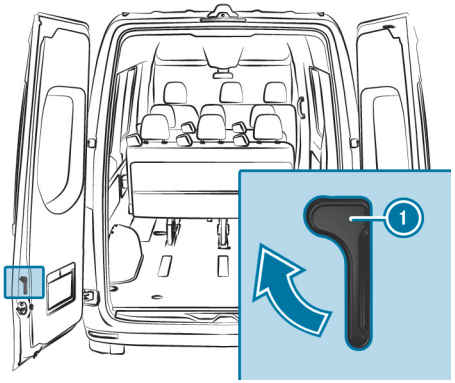

- Ensure that the right-hand rear-end door is open and engaged.
- Pull the release handle (1) in the direction indicated by the arrow.
- Swing the rear-end door to the side until it engages at approximately 90°or 270°.

CLOSING THE REAR-END DOORS FROM THE OUTSIDE

- Close the left-hand rear-end door firmly from the outside.
- Close the right-hand rear-end door firmly from the outside.

Opening rear-end doors with door check beyond 90°

WARNING
Risk of injury due to the rear-end door swinging open

WHEN YOU OPEN A REAR-END DOOR, THE FOLLOWING CAN OCCUR:

- You or another person can be injured.
- A person may be struck by oncoming traffic.

This is particularly the case if you open the rear-end door more than 90° or if it opens in an uncontrolled manner.

Even rear-end doors which are properly closed can swing open when the vehicle parked is on an incline or it is windy.

► Only open a rear-end door when the traffic conditions and surroundings permit.

► Always make sure that the rear-end doors are properly closed.

NOTE
Damage to the rear-end doors due to objects obstructing their range of movement

When the rear-end doors are opened, any objects obstructing the range of movement of the rear-end doors can be damaged as well as the vehicle.

► Make sure that there is sufficient clearance when opening the rear-end doors.

Requirements

- The vehicle features the necessary equipment for opening the rear-end doors up to an angle of 270° (side wall).

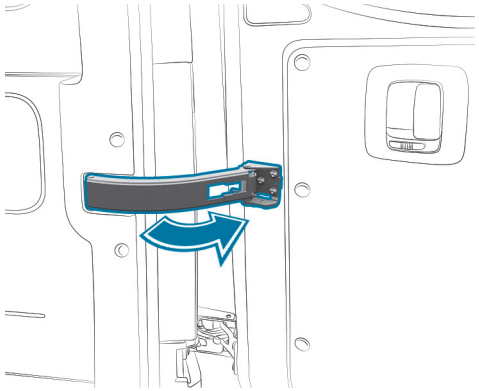

► Open the rear-end door to approximately 45°.

► Pull the door check in the direction indicated by the arrow and hold in place.

- Open the rear-end door beyond 90° so that the door check can no longer lock in place.
- Release the door check and open the rear-end door until it engages at approximately 270°.

Opening/closing the rear-end doors from the inside

WARNING
Risk of injury due to the rear-end door swinging open

WHEN YOU OPEN A REAR-END DOOR, THE FOLLOWING CAN OCCUR:

- You or another person can be injured.
- A person may be struck by oncoming traffic.

This is particularly the case if you open the rear-end door more than 90° or if it opens in an uncontrolled manner.

Even rear-end doors which are properly closed can swing open when the vehicle parked is on an incline or it is windy.

- Only open a rear-end door when the traffic conditions and surroundings permit.
- Always make sure that the rear-end doors are properly closed.

NOTE
Damage to the rear-end doors due to objects obstructing their range of movement

When the rear-end doors are opened, any objects obstructing the range of movement of the rear-end doors can be damaged as well as the vehicle.

- Make sure that there is sufficient clearance when opening the rear-end doors.

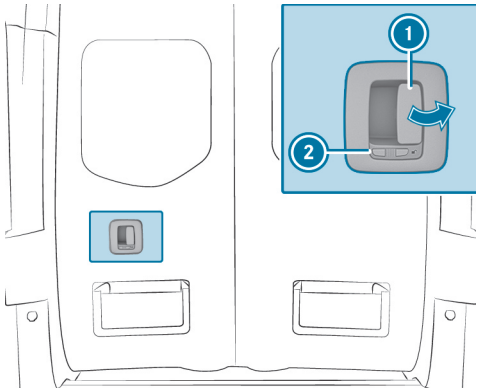

The symbol indicates that the rear-end door is unlocked.

- **To unlock:** slide the catch (2) to the left.
  The symbol is visible.
- **To open:** pull the opening lever (1) and open the rear-end door. Swing the rear-end door to the side until it engages.
- **To close:** ensure that the left rear-end door is closed. Pull the right-hand rear-end door firmly shut using the door handle.

- **To lock:** slide the catch (2) to the right.
  The [🔒] symbol is visible.

Partition sliding door

Opening and closing the partition sliding door

> **WARNING**
> Risk of becoming trapped if the partition sliding door is not engaged
>
> The partition sliding door may move on its own while the vehicle is in motion.
>
> This can cause you or other people to become trapped.
>
> ► Before every journey, close the partition sliding door and ensure that it is engaged.

FROM THE CAB

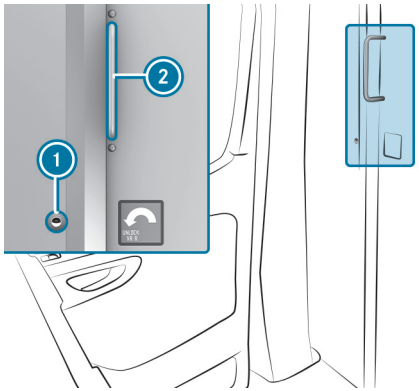

► **To lock and unlock with a separate key:** turn the lock cylinder ① to the right to lock or to the left to unlock.

► **To open:** using the door handle ②, push the sliding door to the right as far as it will go.

► **To close:** using the door handle ②, push the sliding door to the left until it engages.

FROM THE LOAD COMPARTMENT

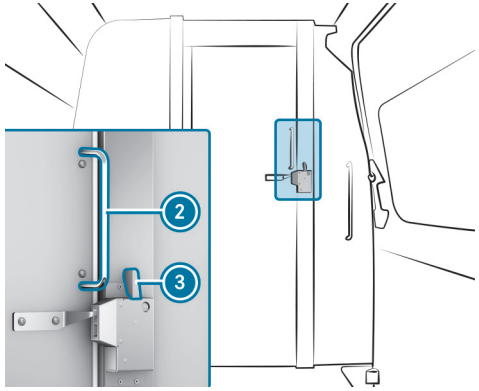

► **To lock and unlock:** push the lever ③ to the left to lock or to the right to unlock.

► **To open:** using the door handle ②, push the sliding door to the left as far as it will go.

- **To close:** using the door handle (2), push the sliding door to the right until it engages.

Electrical step

Function of the electric step

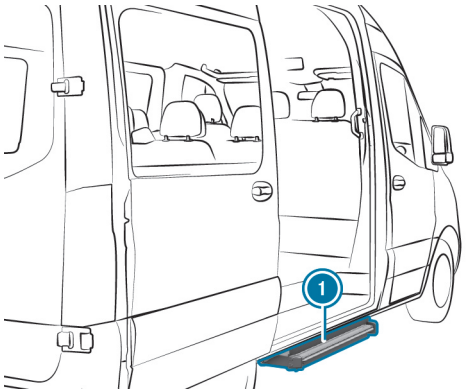

Your vehicle's sliding door may be equipped with an electric step 1.

The electric step automatically extends when the sliding door opens and retracts after the sliding door closes. The electric step is equipped with object detection at the front. If the step meets an object while extending, it will stop. Once you have removed the object, you must first close the sliding door and then open it again so that the step extends completely.

If the electric step prevents loading, you can block it via object detection when the sliding door opens. The electric step will then remain retracted and a fork-lift truck or another lifting vehicle can move closer to the load compartment.

If the electric step is obstructed or malfunctions, the instrument cluster will show a display message (→ page 798) to that effect and a warning tone will sound. It will be possible to extend or retract the electric step only partially or not at all. In the event of a malfunction, you will need to retract and lock the electric step manually before continuing your journey (→ page 200). Before passengers exit the vehicle, inform them that the electric step may be unavailable.

Releasing the electrical step in an emergency (manual retraction)

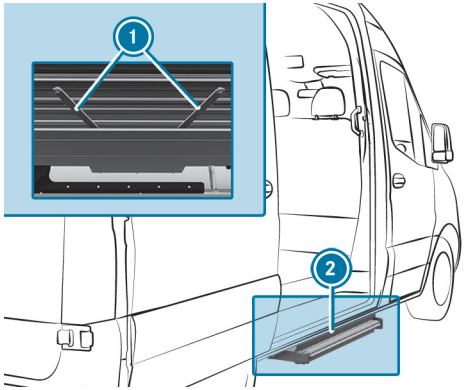

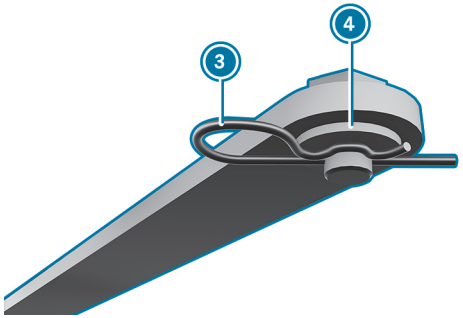

If the electric step 2 does not retract automatically, you will need to retract and secure the step 2 manually before continuing your journey.

- Pull out the spring cotters 3 from their pins using both the rods 1 on the underside of the step 2.
- Remove the washers 4 and detach both the rods 1.

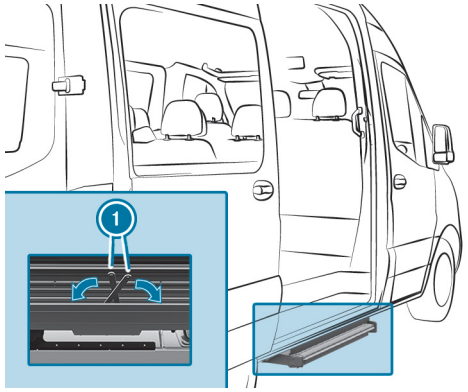

- Fold the rods 1 into the housing of the step 2.
- Slide the step 2 into its housing.

> ⓘ When securing the step 2 for the first time, you will need to puncture a film with the spring cotters 3.

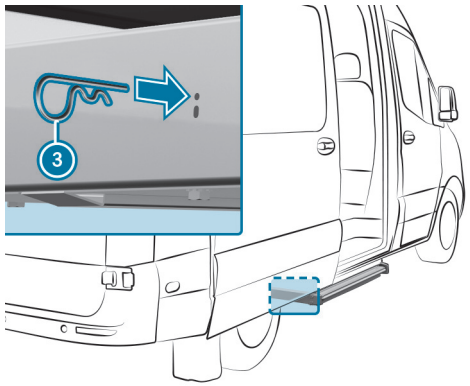

- On both sides, insert the spring cotters (3) through the holes in the housing and into the step (2) as far as they will go.

  The step (2) will now be secured in its housing.

Platform dropsides

Opening and closing platform dropsides

WARNING
Risk of injury when a loaded dropside is opened

The dropside may fall open when the dropside latch is opened.

- Before opening, make sure that no-one is within the range of movement of the dropside.
- Always open the dropside latches to the side of the dropside to be opened.
- Special care must be taken if the dropside latches cannot be opened with the usual amount of force.

WARNING
Risk of accident if the exterior lighting is covered by the dropside.

The exterior lighting at the rear is concealed when you open the rear dropside.

As a result, other road users cannot detect the vehicle as an obstacle until late.

- Protect the vehicle at the rear in accordance with national regulations, e.g. with a warning triangle.

TO OPEN

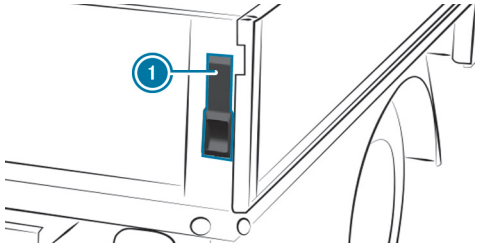

- Grip the platform dropside firmly.
- Raise the lever (1) up as far as it will go.
- Repeat the procedure on the other side of the platform dropside.
- Fold the platform dropside up to the 90° position.

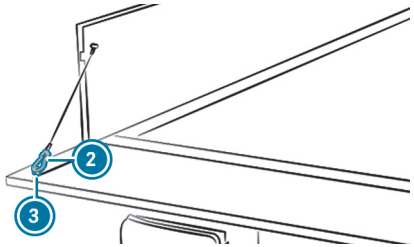

- Raise the platform dropside and unhook the holding rope snap hook (2) from the eyelet (3).

- Repeat the procedure on the other side of the platform dropside.
- Carefully fold down the platform dropside.

TO CLOSE

- Raise the platform dropside and hook the holding rope snap hook ② into the eyelet ③.
- Repeat the procedure on the other side of the platform dropside.
- Raise the platform dropside and press it closed.
- Lower the lever ① as far as it will go.
- Repeat the procedure on the other side of the platform dropside.

Attaching/detaching side platform dropsides

DETACHING

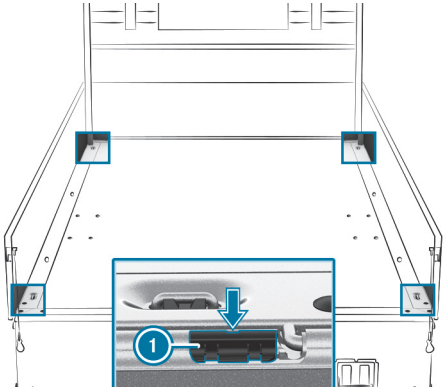

Perform these tasks carefully with the assistance of another person.

- Fold down the rear platform dropside.
- Fold down a side platform dropside.
- Lever the locking pawl ① of the side platform dropside out of its guide at the recess using the screwdriver from the vehicle tool kit (arrow).
- Fold the platform dropside upwards to the 80° position (approximately).
- Pull the platform dropside out of the hinge pins and remove.

ATTACHING

- Carefully place the platform dropside against the hinge pins in the 80° position (approximately); the locking pawl ① must be sitting on the platform dropside.
- Push the platform dropside onto the hinge pins.
- Insert the locking pawl ① and fold up the platform dropside.

Side window

Opening and closing the side windows

WARNING
Risk of becoming trapped when opening a side window

When you open a side window, parts of the body could be drawn in or become trapped between the side window and window frame.

- When opening, make sure that nobody is touching the side window.
- If someone is trapped, release the button immediately or pull it in order to close the side window again.

WARNING
Risk of becoming trapped when closing a side window

When closing a side window, body parts could be trapped in the closing area in the process.

- When closing, make sure that no body parts are in the closing area.
- If someone is trapped, release the button immediately or press the button in order to reopen the side window.

WARNING
Risk of becoming trapped when children operate the side windows

Children could become trapped if they operate the side windows, particularly when unattended.

- Never leave children unattended in the vehicle.
- When leaving the vehicle, always take the key with you and lock the vehicle.

WARNING
Risk of fatalities due to exposure to extreme heat- or cold in the vehicle

If persons – and in particular children – are exposed to solar radiation, or the effects of heat or cold for prolonged periods of time, there is a risk of sustaining injuries or even fatalities!

- Never leave people – especially children – unattended in the vehicle.

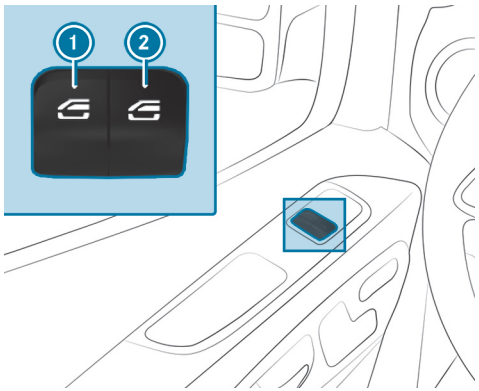

- **To open manually:** press and hold the button ① or ②.
- **To close manually:** pull and hold the button ① or ②.

The windows in the front doors can also be operated automatically.

- **To open completely:** briefly press the button ① or ② beyond the point of resistance.
  Automatic operation begins.
- **To close completely:** briefly pull the button ① or ② beyond the point of resistance.
  Automatic operation begins.
- **To interrupt automatic operation:** briefly press or pull the button ① or ② again.

AUTOMATIC REVERSING FUNCTION OF THE SIDE WINDOWS
If an object obstructs a side window during the closing process, the side window will open again automatically. The automatic reversing function serves solely as an aid and is not a substitute for your attentiveness.

ⓘ If automatic operation of the side window does not work, there will also be no automatic reversing function.

- Ensure that all body parts are clear of the closing area during the closing process.

⚠ **WARNING**
Risk of becoming trapped despite there being reversing protection on the side window

THE REVERSING FUNCTION WILL NOT REACT:

- to soft, light and thin objects, e.g. fingers
- over the last 4 mm of the closing path
- during resetting
- when the side window is closed again manually immediately after automatic reversing

The reversing function cannot prevent someone from becoming trapped in these situations.

- During the closing process, make sure that no body parts are in the closing area.
- If someone becomes trapped, press the button to open the side window again.

Ventilating the vehicle before starting a journey (convenience opening)

WARNING
Risk of entrapment when opening a side window

When opening a side window, parts of the body could be drawn in or become trapped between the side window and window frame.

- When opening, make sure that nobody is touching the side window.
- Release the button immediately if somebody becomes trapped.

You can ventilate the vehicle before you begin driving.

The "convenience opening" function can be operated using the key without switching on the vehicle. The key must be in close proximity to the driver's door or front passenger door.

- Press and hold the button on the key.

  THE FOLLOWING FUNCTIONS ARE PERFORMED:

  - the vehicle is unlocked
  - the side windows are opened

- **To interrupt convenience opening:** release the button .

Closing the side windows from the outside (convenience closing)

WARNING
Risk of entrapment due to not paying attention during convenience closing

When the convenience closing feature is operating, parts of the body could become trapped in the closing area of the side windows.

- When the convenience closing feature is operating, monitor the entire closing process and make sure that no body parts are in the closing area.

- Press and hold the button on the key.

  THE FOLLOWING FUNCTIONS ARE PERFORMED:

  - the vehicle is locked
  - the side windows are closed

- **To interrupt convenience closing:** release the button .

Adjusting the side windows

The side windows must be readjusted following a malfunction or an interruption in voltage supply .

- Switch on the power supply (⟶ page 307).
- Push both window lifter buttons and hold for approximately one second after the side window has closed.

Rectifying problems with the side windows

WARNING
Risk of becoming trapped or fatally injured if reversing protection is not activated

If you close a side window again immediately after it has been blocked, the side window will close with increased or maximum force. The reversing function is then not active and body parts may become trapped.

- Make sure that no parts of the body are in the closing area.
- To stop the closing process, release the button or press the button again to reopen the side window.

YOU CANNOT OPEN OR CLOSE A SIDE WINDOW ALL THE WAY.

- Check to see if there are any objects in the window guide.
- Reset the side windows (⟶ page 206).

THE SIDE WINDOWS CANNOT BE OPENED OR CLOSED WITH THE VEHICLE KEY

POSSIBLE CAUSE:

- The key battery is weak or flat.

- Check the key battery using the indicator lamp and replace it if necessary (⟶ page 175).

Anti-theft protection

Function of the immobiliser

The immobiliser prevents your vehicle from being started without the correct key.

The immobiliser is automatically activated when the vehicle is switched off, and deactivated when the vehicle is switched on.

ATA (Anti-Theft Alarm system)

FUNCTION OF ATA (ANTI-THEFT ALARM SYSTEM)

IF THE ATA SYSTEM IS PRIMED, A VISUAL AND AUDIBLE ALARM IS TRIGGERED IN THE FOLLOWING SITUATIONS:

- a side door is opened
- the rear-end door is opened
- the bonnet is opened.
- the interior protection is triggered (⟶ page 210)
- tow-away protection is triggered (⟶ page 209)

The alarm will not be deactivated, even if the door which was opened to trigger the alarm is immediately closed again, for example.

Cancelling a triggered alarm (⟶ page 209).

THE ATA IS ACTIVATED AUTOMATICALLY AFTER APPROXIMATELY TEN SECONDS IN THE FOLLOWING INSTANCE:

- after the vehicle has been locked with the key

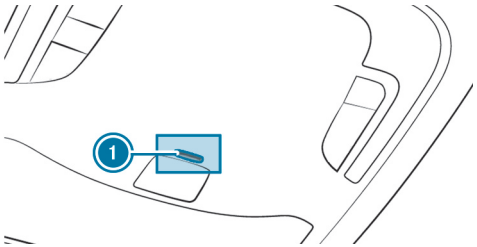

When the ATA system is primed, an indicator lamp (1) flashes in the overhead control panel.

ATA IS AUTOMATICALLY DEACTIVATED IN THE FOLLOWING SITUATIONS:

- after unlocking the vehicle with the key
- after pressing the start/stop button with the key inside the vehicle

PRIMING/DEACTIVATING THE ATA (ANTI-THEFT ALARM SYSTEM)

TO ACTIVATE

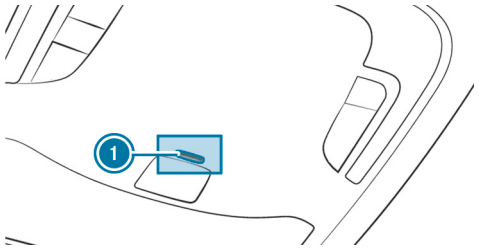

- Close all doors.

> ⓘ Close the side window or deactivate the interior protection (⟶ page 210) to prevent a false alarm.

- Lock the vehicle with the key.

  The indicator lamp ① in the overhead control panel begins flashing.

TO DEACTIVATE

- Unlock the vehicle with the key.

  The indicator lamp ① in the overhead control panel goes out.

> ⓘ The vehicle locks again automatically if you do not open a door within 40 seconds after unlocking the vehicle.

CANCELLING THE ALARM

- Press the buttons 🔓 or 🔒 on the key.

or

- Press the start/stop button with the key inside the vehicle.

  The alarm is switched off.

Function of tow-away protection

When tow-away protection is primed, a visual and audible alarm is triggered if the vehicle's inclination changes. This may be the case, forexample, if the vehicle is lifted on one side.

Priming or deactivating tow-away protection

PRIMING/DEACTIVATING

- Lock the vehicle with the key.

  Tow-away protection is automatically primed after about 40 seconds:

- Open the vehicle with the key.

  Tow-away protection is deactivated.

TOW-AWAY PROTECTION IS ACTIVATED IF THE FOLLOWING CONDITION IS MET:

- All the doors are closed.

DEACTIVATING

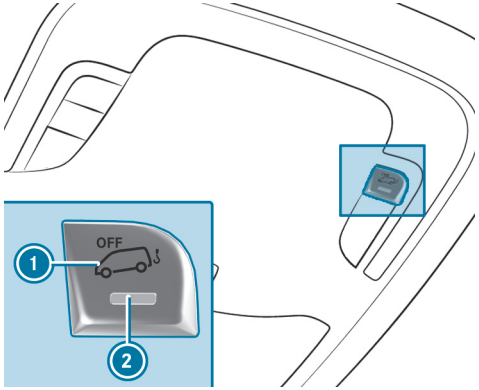

- Switch off the vehicle (⟶ page 307).
- Press the button 1.
  When the button is released, the indicator lamp 2 in the button lights up for approximately three seconds.
- Lock the vehicle with the key.
  Tow-away protection is deactivated.

TOW-AWAY PROTECTION IS ACTIVATED AGAIN IN THE FOLLOWING CASES:

- The vehicle is unlocked again.
- A door is opened
- The vehicle is locked again.

DEACTIVATE TOW-AWAY PROTECTION WHEN LOCKING YOUR VEHICLE IN THE FOLLOWING SITUATIONS:

- when loading and/or transporting the vehicle on a ferry or car transporter, for example
- when parking the vehicle on a movable surface, suchas a split-level garage

False alarms will thus be prevented.

Function of interior protection

FUNCTION

A visual and acoustic alarm is triggered if the primed interior protection detects motion in the vehicle interior.

Depending on the respective equipment, the interior protection may be automatically deactivated temporarily if the stationary heater is switched on.

Priming/switching off the interior protection

PRIMING

- Close the side windows.
- Ensure that nothing (suchas mascots or clothes hangers) is hanging on the inside mirror or on the grab handles. False alarms will thus be prevented.
- Lock the vehicle with the key.
  The interior protection is primed after approximately 40 seconds.

THE INTERIOR PROTECTION IS ACTIVATED IF THE FOLLOWING CONDITION IS MET:

- All the doors are closed.

SWITCHING OFF

► Unlock the vehicle with the key.
The interior protection automatically switches off.

DEACTIVATING

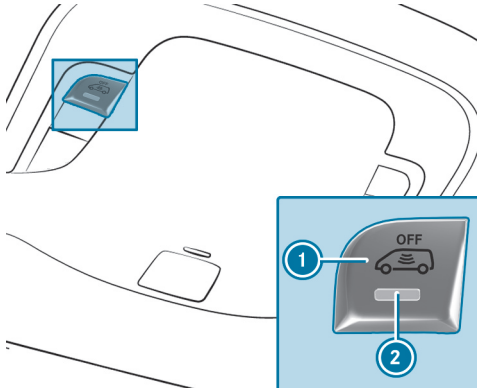

► Switch off the vehicle (→ page 307).

► Press the 1 button.
When the button is released, the indicator lamp 2 in the button lights up for approximately three seconds.

► Lock the vehicle with the key.
The interior protection is deactivated.

THE INTERIOR PROTECTION IS ACTIVATED AGAIN IN THE FOLLOWING CASES:

- The vehicle is unlocked again.
- A door is opened.
- The vehicle is locked again.

DEACTIVATE THE INTERIOR PROTECTION WHEN LOCKING YOUR VEHICLE IN THE FOLLOWING SITUATIONS:

- people or animals remain inside the vehicle
- if the side windows remain open
- when transporting the vehicle, for example on a ferry or car transporter.

False alarms will thus be prevented.

Seats and stowage

This interactive PDF works like a website – tap or click a button to jump straight to where you want to go.
You can return here at any time via the navigation bar at the top left.

Notes on the correct driver's seat position
Notes on grab handles
Seats
Steering wheel
Stowage areas
Information about the bottle holder
Cup holder
Ashtray and cigarette lighter
Sockets
Wirelessly charging the mobile phone and coupling with the exterior aerial
Fitting and removing the floor mats

Notes on the correct driver's seat position

WARNING
Risk of accident due to adjusting the vehicle settings while the vehicle is in motion

YOU COULD LOSE CONTROL OF THE VEHICLE IN THE FOLLOWING SITUATIONS IN PARTICULAR:

- if you adjust the driver's seat, the head restraint, the steering wheel or the mirror while the vehicle is in motion
- if you fasten your seat belt while the vehicle is in motion

▶ Before starting the vehicle: in particular, adjust the driver's seat, head restraint, steering wheel and mirror, and fasten your seat belt.

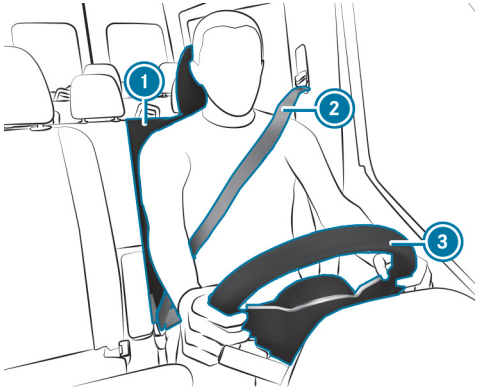

ENSURE THE FOLLOWING WHEN ADJUSTING STEERING WHEEL 3, SEAT BELT 2 OR DRIVER'S SEAT 1:

- You are sitting as far away from the driver's airbag as possible.
- You are sitting in an upright position.
- Your thighs are gently supported by the seat cushion.
- Your legs are not fully extended and you can reach the pedals easily.
- The back of your head is supported at eye level by the middle part of the head restraint.
- You can hold the steering wheel with your arms slightly bent.
- You can move your legs without any restrictions.
- You can see all of the instrument cluster displays well.
- You have a good overview of the traffic conditions.
- Your seat belt sits snugly against your body and passes across the centre of your shoulder and across your hips in the pelvic area.

Notes on grab handles

WARNING
Risk of injury due to excessive load on the grab handles

If you apply your full body weight to the grab handle or pull it abruptly, the grab handle may be damaged or come loose from its anchorage. This may result in injuries.

- Use the grab handles only to stabilise the seating position or to assist in getting in and out of the seat.

Seats

Adjusting the front seats manually (without Seat Comfort Package)

WARNING
Risk of becoming trapped if the seat is adjusted by children

Children could become trapped if they adjust the seats, particularly if they are unattended.

- When leaving the vehicle, always take the key with you and lock the vehicle.
- Never leave children unattended in the vehicle.

WARNING
Risk of becoming trapped if the seats are adjusted

When adjusting a seat, you may trap yourself or a vehicle occupant, e.g. on the seat guide rail.

- Make sure that no part of the body is within the seat's range of motion when adjusting a seat.

Observe the safety notes on "Airbags" and "Children in the vehicle".

WARNING
Risk of accident due to the driver's seat not being engaged

The driver's seat may move unexpectedly while driving.

This could cause you to lose control of the vehicle.

- Always make sure that the driver's seat is engaged before starting the vehicle.

WARNING
Risk of accident due to adjusting the vehicle settings while the vehicle is in motion

YOU COULD LOSE CONTROL OF THE VEHICLE IN THE FOLLOWING SITUATIONS IN PARTICULAR:

- if you adjust the driver's seat, the head restraint, the steering wheel or the mirror while the vehicle is in motion
- if you fasten your seat belt while the vehicle is in motion

- Before starting the vehicle: in particular, adjust the driver's seat, head restraint, steering wheel and mirror, and fasten your seat belt.

WARNING
Risk of becoming trapped if the seat height is adjusted carelessly

If you adjust the seat height carelessly, you or other vehicle occupants could be trapped and thereby injured.

Children in particular could accidentally operate the seat adjustment buttons and become trapped.

- While moving the seats, make sure that hands or other body parts do not get under the lever assembly of the seat adjustment system.

WARNING
Risk of injury due to head restraints not being fitted or being adjusted incorrectly

If head restraints have not been installed or have not been adjusted correctly, there is an increased risk of injury in the head and neck area, e.g. in the event of an accident or when braking.

- Always drive with the head restraints fitted.
- Before driving off, make sure for every vehicle occupant that the centre of the head restraint supports the back of the head at about eye level.

Do not swap the head restraints on the front and rear seats. Otherwise, you will not be able to adjust the heights and angles of the head restraints correctly.

Using the head restraint fore-and-aft adjustment, adjust the head restraint so that it is as close to the back of your head as possible.

WARNING
Risk of injury or death due to incorrect seat position

The seat belt will not offer the intended level of protection if you have not moved the seat backrest to an almost vertical position.

In particular, you may slip under the seatbelt and injure yourself.

- Adjust the seat properly before beginning your journey.
- Always ensure that the seat backrest is in an almost vertical position and that the shoulder section of your seat belt is routed across the centre of your shoulder.

NOTE
Damage to the seats when moving the seats back

The seats may be damaged by objects when moving the seats back.

- When moving the seats back, make sure that there are no objects in the footwell, under or behind the seats.

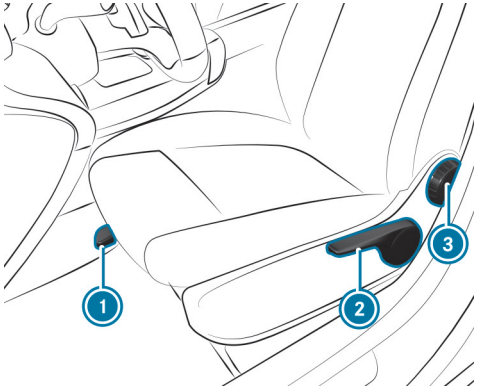

1. Seat fore-and-aft position
2. Seat height
3. Seat backrest inclination

- **To adjust the seat fore-and-aft position:** lift the lever 1 and slide the seat into the desired position. Ensure that the seat is locked in place.
- **To adjust the seat height:** keep on pushing or pulling the lever 2 until the required seat height is reached.
- **To adjust the seat backrest inclination:** rotate the handwheel 3 forwards and backwards until the desired position is reached.

Adjusting the front seats manually (with Seat Comfort Package)

WARNING
Risk of becoming trapped if the seat is adjusted by children

Children could become trapped if they adjust the seats, particularly if they are unattended.

- When leaving the vehicle, always take the key with you and lock the vehicle.
- Never leave children unattended in the vehicle.

WARNING
Risk of becoming trapped if the seats are adjusted

When adjusting a seat, you may trap yourself or a vehicle occupant, e.g. on the seat guide rail.

- Make sure that no part of the body is within the seat's range of motion when adjusting a seat.

Observe the safety notes on "Airbags" and "Children in the vehicle".

WARNING
Risk of accident due to the driver's seat not being engaged

The driver's seat may move unexpectedly while driving.

This could cause you to lose control of the vehicle.

- Always make sure that the driver's seat is engaged before starting the vehicle.

WARNING
Risk of accident due to adjusting the vehicle settings while the vehicle is in motion

YOU COULD LOSE CONTROL OF THE VEHICLE IN THE FOLLOWING SITUATIONS IN PARTICULAR:

- if you adjust the driver's seat, the head restraint, the steering wheel or the mirror while the vehicle is in motion
- if you fasten your seat belt while the vehicle is in motion

- Before starting the vehicle: in particular, adjust the driver's seat, head restraint, steering wheel and mirror, and fasten your seat belt.

WARNING
Risk of becoming trapped if the seat height is adjusted carelessly

If you adjust the seat height carelessly, you or other vehicle occupants could be trapped and thereby injured.

Children in particular could accidentally press the electrical seat adjustment buttons and become trapped.

- While moving the seats, make sure that hands or other body parts do not get under the lever assembly of the seat adjustment system.

WARNING
Risk of injury due to head restraints not being fitted or being adjusted incorrectly

If head restraints have not been installed or have not been adjusted correctly, there is an increased risk of injury in the head and neck area, e.g. in the event of an accident or when braking.

- Always drive with the head restraints fitted.

- Before driving off, make sure for every vehicle occupant that the centre of the head restraint supports the back of the head at about eye level.

Do not swap the head restraints on the front and rear seats. Otherwise, you will not be able to adjust the heights and angles of the head restraints correctly.

Using the head restraint fore-and-aft adjustment, adjust the head restraint so that it is as close to the back of your head as possible.

WARNING
Risk of injury or death due to incorrect seat position

The seat belt will not offer the intended level of protection if you have not moved the seat backrest to an almost vertical position.

In particular, you may slip under the seatbelt and injure yourself.

- Adjust the seat properly before beginning your journey.
- Always ensure that the seat backrest is in an almost vertical position and that the shoulder section of your seat belt is routed across the centre of your shoulder.

NOTE
Damage to the seats when moving the seats back

The seats may be damaged by objects when moving the seats back.

- When moving the seats back, make sure that there are no objects in the footwell, under or behind the seats.

Illustration of the comfort suspension seat

1. Seat cushion length
2. Seat backrest inclination
3. Seat height
4. Seat cushion inclination
5. Seat fore-and-aft position
6. Seat suspension
7. Vibration limiting

- **To adjust the seat cushion length:** lift the lever 1 and slide the front part of the seat cushion forwards or backwards.
- **To adjust the seat backrest inclination:** rotate the handwheel 2 forwards and backwards until the desired position is reached.
- **To adjust the seat height:** pull or push the lever 3 until the desired position is reached.
- **To adjust the seat cushion inclination:** rotate the handwheel 4 forwards and backwards until the desired position is reached.

- **To adjust the seat fore-and-aft position:** lift the lever (5) and slide the seat into the desired position.
- **To check for safety:** ensure that the seat is locked in place.
- **To adjust the seat suspension:** take your weight off the seat.
- Using the handwheel (6), set the body weight (40 kg to 120 kg) so that the seat suspension works optimally. If you set a higher weight, the seat suspension will become firmer. The seat will then not vibrate as much. If the seat vibrates often and significantly, you can lock it in place in the lower position.
- **To engage vibration limiting:** turn the lever (7) upwards.

  The next time the seat vibrates, the seat will lock in place.
- **To release vibration limiting:** turn the lever (7) to the right.

  The seat will then be able to vibrate.

Adjusting the front seat electrically

> ⚠ **WARNING**
> Risk of becoming trapped if the seat is adjusted by children
>
> Children could become trapped if they adjust the seats, particularly if they are unattended.
>
> - When leaving the vehicle, always take the key with you and lock the vehicle.
> - Never leave children unattended in the vehicle.

The seats can be adjusted when the vehicle is switched off.

> ⚠ **WARNING**
> Risk of becoming trapped if the seats are adjusted
>
> When adjusting a seat, you may trap yourself or a vehicle occupant, e.g. on the seat guide rail.
>
> - Make sure that no part of the body is within the seat's range of motion when adjusting a seat.

Observe the safety notes on "Airbags" and "Children in the vehicle".

> ⚠ **WARNING**
> Risk of accident due to the driver's seat not being engaged
>
> The driver's seat may move unexpectedly while driving.
>
> This could cause you to lose control of the vehicle.
>
> - Always make sure that the driver's seat is engaged before starting the vehicle.

WARNING
Risk of accident due to adjusting the vehicle settings while the vehicle is in motion

YOU COULD LOSE CONTROL OF THE VEHICLE IN THE FOLLOWING SITUATIONS IN PARTICULAR:

- if you adjust the driver's seat, the head restraint, the steering wheel or the mirror while the vehicle is in motion
- if you fasten your seat belt while the vehicle is in motion

► Before starting the vehicle: in particular, adjust the driver's seat, head restraint, steering wheel and mirror, and fasten your seat belt.

WARNING
Risk of becoming trapped if the seat height is adjusted carelessly

If you adjust the seat height carelessly, you or other vehicle occupants could be trapped and thereby injured.

Children in particular could accidentally press the electrical seat adjustment buttons and become trapped.

► While moving the seats, make sure that hands or other body parts do not get under the lever assembly of the seat adjustment system.

WARNING
Risk of injury due to head restraints not being fitted or being adjusted incorrectly

If head restraints have not been installed or have not been adjusted correctly, there is an increased risk of injury in the head and neck area, e.g. in the event of an accident or when braking.

► Always drive with the head restraints fitted.

► Before driving off, make sure for every vehicle occupant that the centre of the head restraint supports the back of the head at about eye level.

Do not swap the head restraints on the front and rear seats. Otherwise, you will not be able to adjust the heights and angles of the head restraints correctly.

Using the head restraint fore-and-aft adjustment, adjust the head restraint so that it is as close to the back of your head as possible.

WARNING
Risk of injury or death due to incorrect seat position

The seat belt will not offer the intended level of protection if you have not moved the seat backrest to an almost vertical position.

In particular, you may slip under the seatbelt and injure yourself.

► Adjust the seat properly before beginning your journey.

► Always ensure that the seat backrest is in an almost vertical position and that the shoulder section of your seat belt is routed across the centre of your shoulder.

NOTE
Damage to the seats when moving the seats back

The seats may be damaged by objects when moving the seats back.

- When moving the seats back, make sure that there are no objects in the footwell, under or behind the seats.

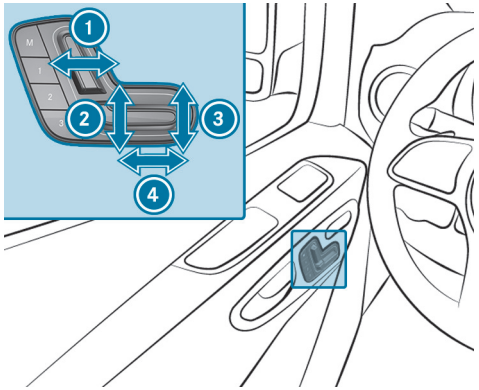

1. Seat backrest inclination
2. Seat height
3. Seat cushion inclination
4. Seat fore-and-aft position

- Save the adjustments with the memory function (⟶ page 223).

Setting 4-way lumbar support

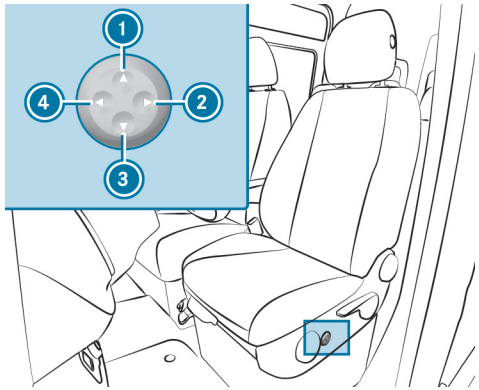

1. Higher
2. Softer
3. Lower
4. Firmer

- Use buttons 1 to 4 adjust the backrest contour individually to your spine.

Operating the memory function

WARNING
Risk of an accident if the memory function is used while driving

If you use the memory function on the driver's side while driving, you could lose control of the vehicle as a result of the adjustments being made.

- Only use the memory function on the driver's side when the vehicle is stationary.

WARNING
Risk of entrapment when adjusting the seat with the memory function

When the memory function adjusts the seat, you and other vehicle occupants – particularly children – could become trapped.

- During the adjustment process of the memory function, make sure that no one has any body parts in the sweep of the seat.
- If somebody becomes trapped, immediately release the memory function position button.
  The adjustment process is stopped.

WARNING
Danger of entrapment when memory function is activated by children

When children activate the memory function, they can get trapped, especially if they are unsupervised.

- Never leave children unattended in the vehicle.
- When leaving the vehicle, always take the key with you and lock the vehicle.

The memory function can be used when the vehicle is switched off.

STORING SEAT ADJUSTMENTS
Seat adjustments for up to three people can be stored and called up using the memory function. You can adjust the seat and the backrest.

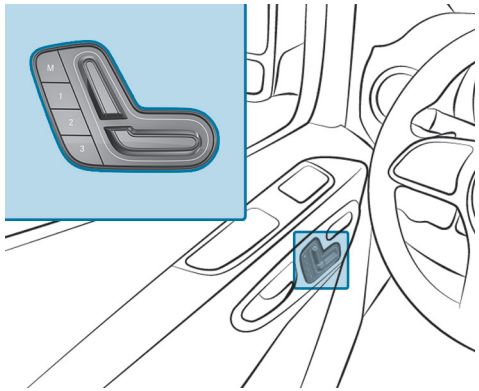

- Adjust the seat to the desired position.

- Press memory button M together with one of preset position buttons 1, 2 or 3.

  An acoustic signal sounds. The settings are stored.

- **To call up:** Press and hold down the preset position buttons 1, 2 or 3 until the front seat is in the stored position.

Rotating the front seats

WARNING
Risk of injury or fatal injuries if the driver's seat and front passenger seat are not engaged

In this situation, the restraint systems cannot perform their intended protective function.

- Engage the driver's seat and front passenger seat in the direction of travel before you start the vehicle.

WARNING
Risk of accident due to adjusting the vehicle settings while the vehicle is in motion

YOU COULD LOSE CONTROL OF THE VEHICLE IN THE FOLLOWING SITUATIONS IN PARTICULAR:

- if you adjust the driver's seat, the head restraint, the steering wheel or the mirror while the vehicle is in motion
- if you fasten your seat belt while the vehicle is in motion

- Before starting the vehicle: in particular, adjust the driver's seat, head restraint, steering wheel and mirror, and fasten your seat belt.

WARNING
Risk of injury when the seat is pushed backwards

If the seat has been pushed backwards, you may injure yourself on the seat guide rails protruding at the front.

- Make sure that you do not touch the seat guide rails.

You can rotate the driver's and front passenger seats by 50° and 180°. The seats engage both in and opposite to the direction of travel as well as at 50° towards the exit.

- Ensure that the parking brake is applied and the brake lever (if applicable) is down as far as it will go (→ page 368, 363).
- When rotating the seat, open the respective front door in order to avoid a collision with the door trim.
- Adjust the steering wheel in such a way that there is sufficient clearance to rotate and adjust the driver's seat (→ page 235).
- Slide the front passenger seat forward before rotating it (→ page 215).
- **To rotate the seat:** push lever (1) towards the door and rotate the seat slightly inwards.
  The turning device will be unlocked.
- Release lever (1) again.
- Rotate the seat outwards or inwards into the required position.

Folding the co-driver bench seat cushion forwards and backwards

- **To fold the seat surface forward:** lift seat surface out of front anchorage (1).
- Pull the seat surface out of rear anchorage (2) and move it slightly forwards.
- Fold the rear edge of the seat surface upwards.

> ⓘ You can stow individual objects in the stowage compartment beneath the co-driver bench seat.

- **To fold back the seat surface:** fold the rear edge of the seat surface downwards.
- Slide the seat surface under the seat backrest into rear anchorage (2).
- Push the front seat surface downwards until it engages in front anchorage (1).

Folding the seat surface of the bench seat in the crewcab out and back

Vehicles with a crewcab have a stowage compartment under the seat surface of the rear bench seat.

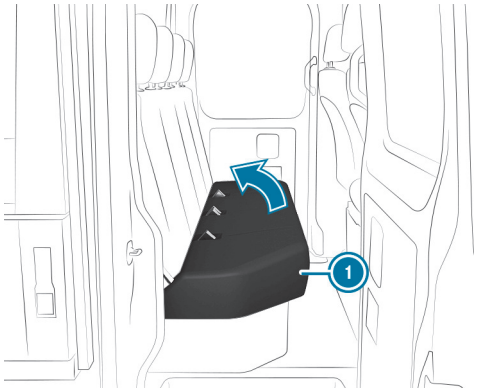

- **To fold the seat surface forward:** lift seat surface (1) out of the front anchorage and fold upwards in the direction of the arrow.

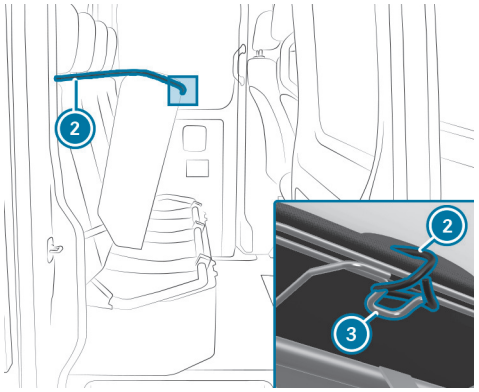

Retainer loops are secured to outer head restraints (2).

- Attach retainer loop (2) to hook (3) under folded-up seat surface (1).
- **To fold back the seat surface:** hold seat surface (1) and unhook retainer loop (2) from hooks (3).
- Fold down the seat surface until it automatically engages.

Folding the folding seat up/down

WARNING
Risk of injury when using the folding seat due to inserted key

The key in the lock of the partition wall sliding door may come into contact with the person on the folding seat.

- Always remove the key before a person sits on the folding seat.

WARNING
Risk of becoming trapped when folding down the folding seat

Hands or other parts of the body may become trapped when you fold down the folding seat.

- When folding down the folding seat, be careful not to trap your hands or other body parts in the seat's area of movement.

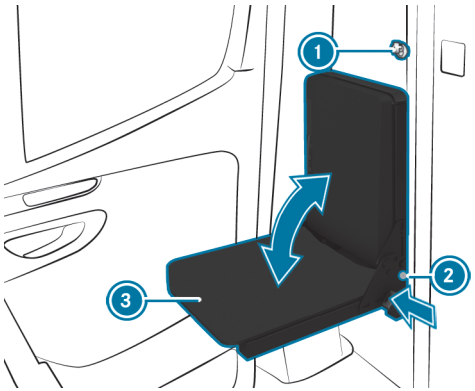

- Remove the key (1) from the partition sliding door.
- **To fold down the seat cushion:** push the push button on the catch (2) and fold down the seat cushion (3) approximately 20 degrees (one fifth of the folding distance).
- Release the push button on the catch (2) and fold the seat cushion (3) further down by pushing on the centre with both hands.

> ⓘ The seat cushion (3) is spring-loaded and will drop down automatically beyond a certain tilt angle.

- Move the seat cushion (3) until it is locked.
  The push button on the catch (2) must be completely flush with the seat frame.
- **To fold up the seat cushion:** push the push button on the catch (2) and fold up the seat cushion (3) approximately 20 degrees (one fifth of the folding distance).
- Release the push button on the catch (2) and fold the seat cushion (3) further up by pulling on the centre with both hands.
- Move the seat cushion (3) until it is locked.
  The push button on the catch (2) must be completely flush with the seat frame.

Notes for vehicles without a front passenger seat

Retrofitting a seat on the front passenger side is not permitted in a vehicle that is delivered from the factory without a front passenger seat (country-specific).

If, contrary to the vehicle documents, you retrofit a seat on the passenger side and/or make changes to the vehicle electronics, the general operating permit will be rendered invalid.

> ⚠ **WARNING**
> Risk of injury or death due to modifications to the restraint system
>
> Vehicle occupants may no longer be protected as intended if alterations are made to the restraint system.
>
> - Never alter the parts of the restraint system.
> - Never tamper with the wiring or any electronic component parts or their software.

WARNING
Risk of accident or injury due to improper modifications to electronic components

Modifications to electronic components, their software or wiring can impair their functionality and/or the functionality of other networked components or safety-relevant systems.

This can endanger the vehicle's operating safety.

- You must not tamper with wiring, electronic components, or their software.
- Always have work on electrical and electronic devices carried out at a qualified specialist workshop.

Adhesive label on seat base

You can obtain further information from any Mercedes-Benz service centre.

Installing and removing the rear bench seat

WARNING
Risk of injury due to incorrect installation of the rear bench seat

If the rear seat is unsuitable, the seat belts may not perform their intended protective function.

- Install the rear seat bench as described and only in the direction of travel.
- Installation of the rear bench seat in a face-to-face position is not permitted.
- Use only rear bench seats that have been approved by Mercedes-Benz for your vehicle.

WARNING
Risk of injury if the rear bench seat is not locked in place

If the rear seat is not stable, it may tip over during a journey.

- Before setting off, ensure that the rear bench seat is engaged. The red indicator tabs must not be visible on the release handle.
- If the red indicator tabs are visible on the release handle, re-engage the rear bench seat.

WARNING
Risk of injury when installing and removing the rear bench seat

When you install or remove the rear bench seat, body parts such as feet may become trapped when the rear bench seat is tipped.

- When installing and removing the rear bench seat, ensure that there are no body parts between the rear bench seat and the floor.

NOTE
Damage to the rear bench seat rollers due to misuse

If the rear bench seat is used improperly or removed incorrectly, the rear bench seat rollers may be damaged.

- If the rear bench seat is in the seat shell, do not pull it towards the rear-end door. Roll the rear seat only beside the seat shells.
- Do not roll or use the rear bench seat as a means of transport when removed.

INSTALLATION POSITION OF THREE-PERSON REAR BENCH SEAT WITH STRUT

The three-person rear bench seat is available with or without a strut. The strut is located on the rear side of the three-person rear bench seat.

Install the three-person rear bench seat with strut only in the third row of seats (above the rear axle).

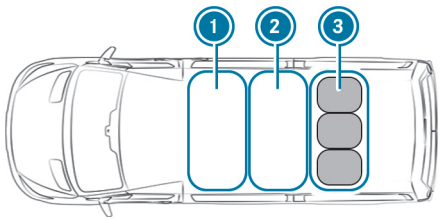

1. First row of seats
2. Second row of seats
3. Third row of seats: three-person rear bench seat with strut

- Install the three-person rear bench seat on third row of seats 3.

REMOVING THE REAR BENCH SEAT

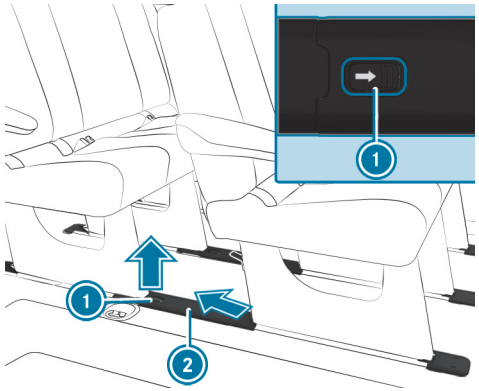

Perform these tasks carefully with the assistance of a second person.

- **To remove the covers of the seat shells:** push retaining clip 1 in the direction of the arrow and detach cover 2 by pushing it to the top rear at an angle.

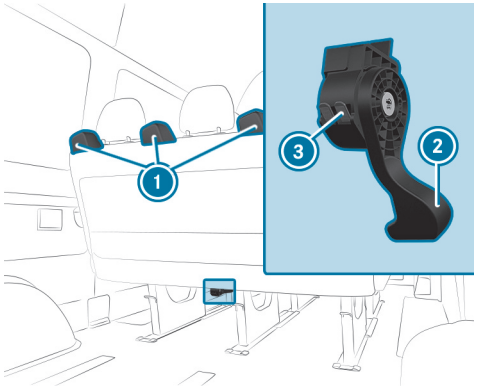

- Push release handle (2) for the bench seat all the way down and hold it there. At the same time, tilt the bench seat backwards slightly using the release handle and pull it slightly backwards.
- Let go of the release handle.
  The locks on the bench seat legs will be unlocked and red indicator tabs (3) on the housing of release handle (2) will be visible.
- Hold the unlocked bench seat by grab handles (1) and pull backwards slightly.

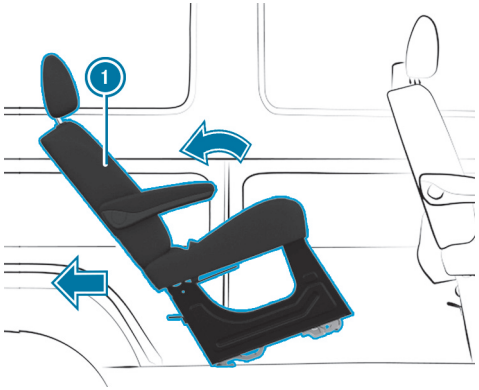

- Tilt bench seat (1) backwards and pull it out of the seat shells.

> ⓘ If the bench seat cannot be pulled out of the seat shells, the bench seat may be wedged in the seat anchorage. This can happen if the bench seat is tilted too far backwards.

If the seat cannot be pulled out of the seat shells, proceed as follows:

- Tilt the bench seat forwards without engaging it.
- Pull the bench seat backwards again using release handle (2).
- Tilt the bench seat slightly backwards and pull it out of the seat shells.
- To remove or store the bench seat, place it next to the seat shells and roll it towards the rear doors.

or

- Lift the bench seat out from the side to store it.

> ⓘ It may be necessary for the bench seats in front or behind to be removed.

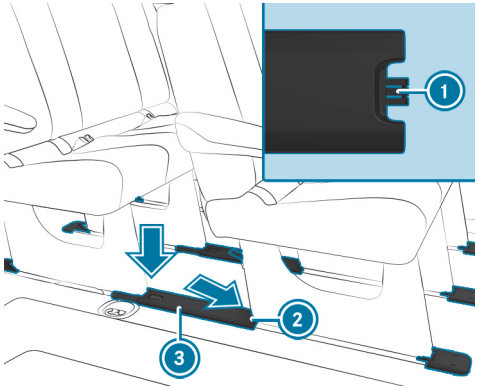

- **To attach the covers of the seat shells:** hold cover 3 such that retaining lug 1 is pointing towards rear seat anchorage 2.
- Insert cover 3 into rear seat anchorage 2 by pushing it downwards at an angle and then clip it to the seat shell.
- After removing the rear bench seats, ensure that the rear bench seats stand firmly and cannot tip over when in storage.

Note that the metallic seat support in the vehicle floor will heat up during a journey if the rear seating has been removed.

INSTALLING THE REAR BENCH SEAT

Warning notice on the rear bench seat

Secure engagement of the rear bench seat is guaranteed only if the seat anchorages are kept clean and free of objects.

> ⓘ In vehicles registered as passenger vehicles, observe the maximum permitted number of seats.

- Remove the covers of the seat shells as described under "Removing the rear bench seat".
- Ensure that there are no objects in the seat anchorages and seat shells.
- Position the bench seat behind the installation position.
- Hold the bench seat by the grab handles and tilt it backwards.
- Roll the bench seat forwards on the level plastic carriers.
- Ensure that the rear legs of the bench seat are engaged.

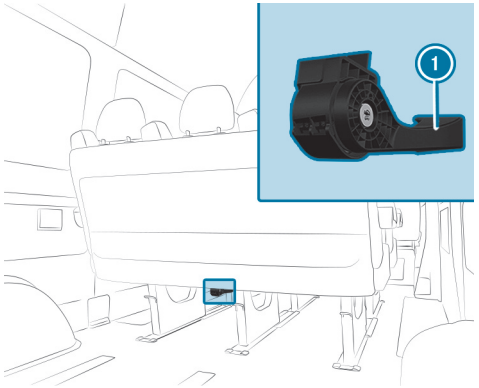

- Tilt the bench seat forwards firmly until the locks on the front legs of the bench seat engage audibly.

  The locks on the front legs of the bench seat will now be locked and the red indicator tabs on the housing of release handle (1) should no longer be visible.

> ⓘ If the red indicator tabs on the release handle housing are visible, the bench seat is not correctly engaged.

If the bench seat is not correctly engaged, you can rectify this situation as follows:

- Unlock the bench seat again and tilt it forwards firmly until the locks on the bench seat front legs engage audibly.
- Attach the covers of the seat shells as described under "Removing the rear bench seat".

Adjusting the seat backrest of the rear bench seat

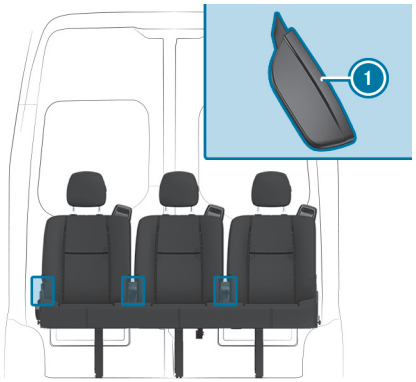

> ⓘ If a partition is installed: the rear bench seat must not come into contact with the partition at any time.

- Pull release handle (1) for the seat backrest upwards and hold it in position.
- Move the seat backrest to the desired position.
- Let go of release handle (1) for the seat backrest and move the seat backrest slightly.

  The seat backrest will engage in position.

Head restraints

ADJUSTING THE HEAD RESTRAINT MANUALLY

WARNING
Risk of accident due to adjusting the vehicle settings while the vehicle is in motion

YOU COULD LOSE CONTROL OF THE VEHICLE IN THE FOLLOWING SITUATIONS IN PARTICULAR:

- if you adjust the driver's seat, the head restraint, the steering wheel or the mirror while the vehicle is in motion
- if you fasten your seat belt while the vehicle is in motion

▶ Before starting the vehicle: in particular, adjust the driver's seat, head restraint, steering wheel and mirror, and fasten your seat belt.

WARNING
Risk of injury due to head restraints not being fitted or being adjusted incorrectly

If head restraints have not been installed or have not been adjusted correctly, there is an increased risk of injury in the head and neck area, e.g. in the event of an accident or when braking.

▶ Always drive with the head restraints fitted.

▶ Before driving off, make sure for every vehicle occupant that the centre of the head restraint supports the back of the head at about eye level.

Do not interchange the head restraints of the front and rear seats. Otherwise, you will not be able to adjust the heights and angles of the head restraints correctly.

Using the head restraint fore-and-aft adjustment, adjust the head restraint so that it is as close to the back of your head as possible.

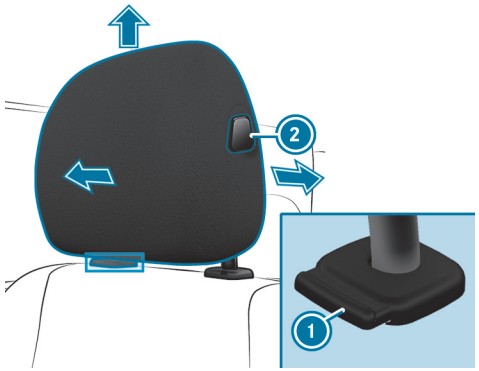

Head restraint (example of luxury head restraint on the driver's seat)

▶ **To raise:** pull the head restraint upwards into the desired position and ensure that it engages.

▶ **To lower:** press release knob 1, slide the head restraint downwards into the desired position and ensure that it engages.

▶ **To move forwards:** press release knob 2 and pull the head restraint forwards until it engages in the desired position.

▶ **To move backwards:** press release knob 2 and slide the head restraint backwards into the desired position.

▶ **To remove:** press release knob 1 and pull the head restraint up and out.

- **To fit:** press the head restraint with detent on the left-hand side when viewed in the direction of travel into the holes until it engages.

Switching the seat heating on/off

WARNING
Risk of burns due to repeatedly switching on the seat heating

Repeatedly switching on the seat heating can cause the seat cushion and seat backrest padding to become very hot.

In particular, the health of persons with limited temperature sensitivity or a limited ability to react to high temperatures may be affected or they may even suffer burn-like injuries.

- Do not repeatedly switch on the seat heating.

To protect against overheating, the seat heating may be temporarily deactivated after it is switched on repeatedly.

NOTE
Damage to the seats caused by objects or documents when the seat heater is switched on

When the seat heater is switched on, overheating may occur due to objects or documents placed on the seats e.g. seat cushions or child seats. This could cause damage to the seat surface.

- Make sure that no objects or documents are on the seats when the seat heater is switched on.

Requirements:

- The power supply is switched on.

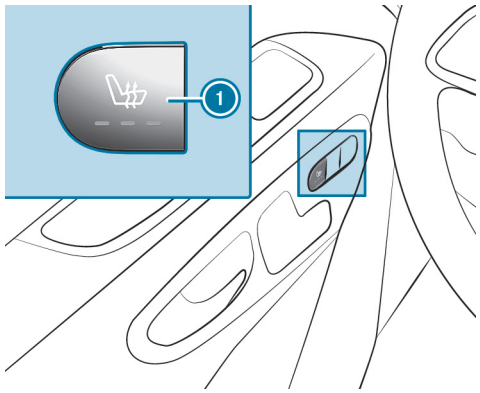

- **To switch on:** press the 1 button.
  All indicator lamps on the button light up.
- **To lower the level:** press button 1 until the required heating level is reached.
  Depending on the heating level, one to three indicator lamps will light up.
- **To switch off:** press button 1 until all indicator lamps are off.

The seat heater automatically switches back out of the three heating levels after 8, 10 and 20 minutes until the seat heater switches off.

Steering wheel

Adjusting the steering wheel

WARNING
Risk of accident due to adjusting the vehicle settings while the vehicle is in motion

YOU COULD LOSE CONTROL OF THE VEHICLE IN THE FOLLOWING SITUATIONS IN PARTICULAR:

- if you adjust the driver's seat, the head restraint, the steering wheel or the mirror while the vehicle is in motion
- if you fasten your seat belt while the vehicle is in motion

▶ Before starting the vehicle: in particular, adjust the driver's seat, head restraint, steering wheel and mirror, and fasten your seat belt.

WARNING
Risk of accident due to unlocked steering wheel

The steering wheel may move unexpectedly if it is unlocked while the vehicle is in motion.

▶ Make sure that the steering wheel is locked before driving off.

▶ Never unlock the steering wheel when the vehicle is in motion.

WARNING
Risk of entrapment for children when adjusting the steering wheel

Children could injure themselves if they adjust the steering wheel.

▶ Never leave children unattended in the vehicle.

▶ When leaving the vehicle, always take the key with you and lock the vehicle.

ADJUSTING THE STEERING WHEEL

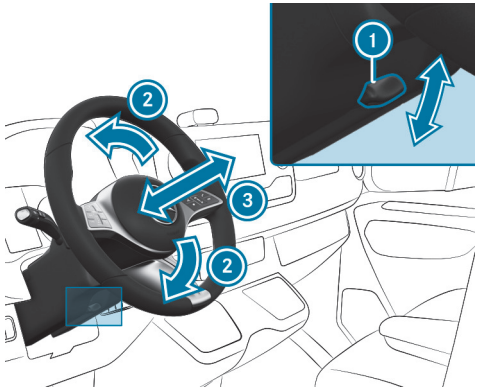

1. Lever
2. Steering column height
3. Steering column fore-and-aft adjustment

- **To unlock:** swing lever ① down as far as it will go.
  The steering wheel is unlocked.
- **To lock:** pull lever ① up as far as it will go.
  The steering wheel is locked.

Switching the steering wheel heater on/off

Requirements

- The vehicle is switched on.

The steering wheel heater can be switched on and off via a switch below the steering wheel.

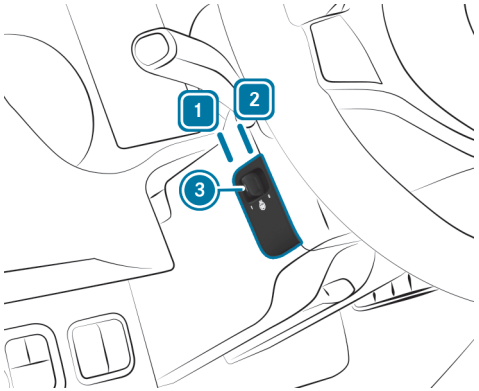

- **To switch on:** push the switch into position 1.
  If the indicator lamp ③ lights up, the steering wheel heater is switched on.
- **To switch off:** push the switch into position 2.

When you switch the vehicle off, the steering wheel heater will switch off.

Stowage areas

Overview of the front stowage compartments

OVERVIEW OF THE FRONT STORAGE COMPARTMENTS

Observe the notes on loading the vehicle (→ page 593).

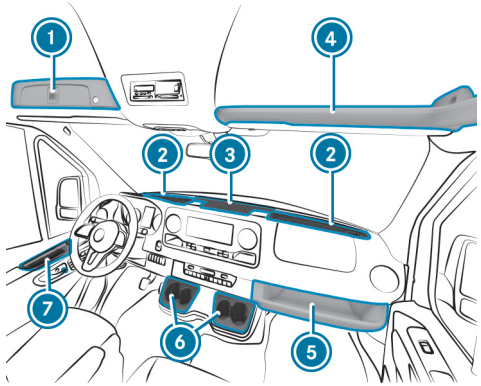

1. Lockable compartment above windscreen (subject to a maximum load of 2 kg)
2. Windscreen storage compartment with two cup holders / ashtray stowage space
   Storage compartment with cover, depending on specification
3. Centre console storage compartment with USB port, charging interface, NFC interface and 12 V socket
4. Storage compartment above windscreen (subject to a maximum load of 2.5 kg)
5. Front passenger side storage compartment (subject to a maximum load of 5 kg)
6. Cup holder (→ page 239)
7. Storage compartment in the doors

Information about the bottle holder

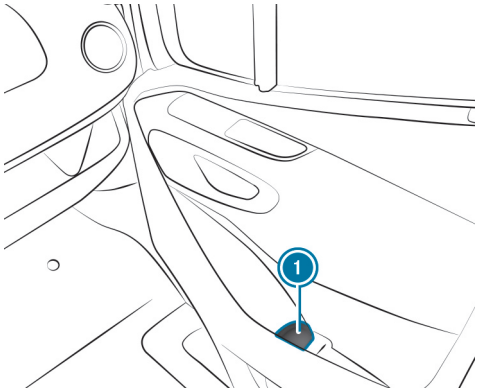

1 Bottle holder in the front doors (example: front passenger door)

Cup holder

Overview of cup holders in the centre console

WARNING
- Risk of accident or injury when using the cup holder while the vehicle is in motion

The cup holder cannot hold a container secure while the vehicle is in motion.

If you use a cup holder while the vehicle is in motion, the container may be flung around and liquids could be spilled. The vehicle occupants may come into contact with the liquid and if it is hot, they could be scalded. You could be distracted from traffic conditions and you may lose control of the vehicle.

- Only use the cup holder when the vehicle is stationary.
- Only use the cup holder for containers of the right size.
- Always close the container, particularly if the liquid is hot.

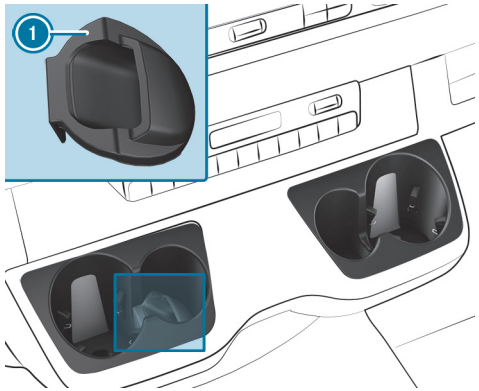

The cup holders for the driver and front passenger are in the centre console.

Key holder (1) for vehicles with a reduced antenna detection range (KEYLESS-START) is located in the driver's cup holder.

For vehicles with manual transmission, the key holder is in the cup holder on the front passenger side.

Opening the cup holder in the rear

WARNING
Risk of injury due to cup holder being extended when exiting the vehicle

You may bump into the cup holder.

- Before getting out of the vehicle, push the cup holder back under the rear bench seat.

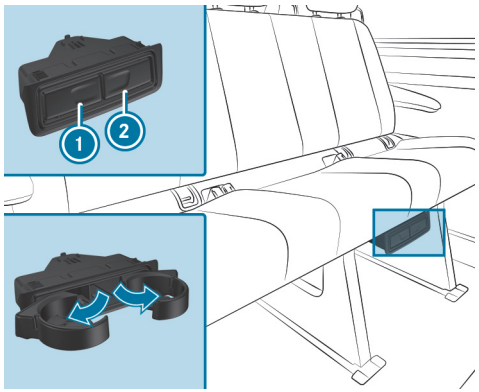

- **To open:** press on cup holder 1 or 2.
- Fold out the cup holder.
- **To close:** slide cup holder 1 or 2 back in until it engages.

Ashtray and cigarette lighter

Using ashtrays

- Place the closed ashtray in a cup holder in the windscreen stowage compartments.
- Check that the ashtray is seated securely.

Do not place the ashtray in the centre console cup holders. It cannot sit securely there.

Using the cigarette lighter in the centre console

WARNING
Risk of fire and injury from hot cigarette lighter

You can suffer burns if you touch the hot heating element or the hot socket of the cigarette lighter.

IN ADDITION, FLAMMABLE MATERIALS CAN CATCH FIRE IF:

- you drop the hot cigarette lighter.
- children e.g. hold the hot cigarette lighter to objects.

- Always hold the cigarette lighter by the knob.
- Always make sure that the cigarette lighter is out of the reach of children.
- Never leave children unattended in the vehicle.

Requirements:

- The vehicle is switched on.

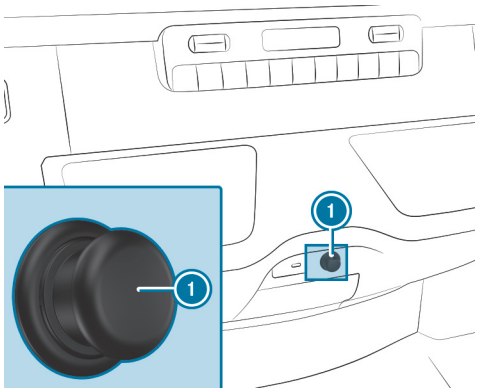

- Press on the cigarette lighter (1).
  The cigarette lighter will pop out when the heating element is red-hot.

Sockets

Using the 12 V sockets

Requirements:

- Only devices with a maximum power consumption of 180 W (15 A) may be connected.

12 V SOCKET IN STOWAGE COMPARTMENT

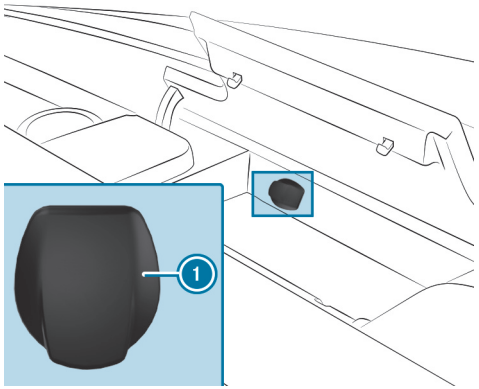

- Open the lid of the stowage compartment in the centre console.
- Fold up cover (1) of the socket.
- Insert the plug of the device.

DEPENDING ON THE VEHICLE EQUIPMENT, THE VEHICLE HAS ADDITIONAL 12 V SOCKETS:

- in the lower control panel in the front centre console
- in the driver's seat
- in the load compartment

Notes on the 230 V socket

NOTE
Damage to the auxiliary battery due to full discharge

The auxiliary battery may become damaged if a device with too high a power output is connected when you leave the vehicle, or the auxiliary battery's charge level is low.

- Only connect devices up to a maximum of 150 W.
- Do not leave devices connected for longer than four hours.

With 150 W, the 230 V socket provides a high power output which enables mobile phones to charge quickly and to connect battery chargers for tools.

Vehicles with an auxiliary battery have a run-on function. If you leave the vehicle, you can charge devices over a period of up to four hours. If the

vehicle is switched on and off again during the run-on period, the run-on function starts again for another four hours.

Using the 230 V socket in the centre console

DANGER
Risk of fatal injuries due to damage from a connecting cable or socket

You could receive an electric shock when pulling the connecting cable or the 230 V power socket out of the trim, or if it is damaged or wet.

- ► Use only connecting cables that are dry and free of damage.
- ► When the vehicle is switched off, make sure that the 230 V power socket is dry.
- ► Immediately have the 230 V power socket checked or replaced at a qualified specialist workshop if it is damaged or has been pulled out of the trim.
- ► Never plug the connecting cable into a 230 V power socket that is damaged or has been pulled out of the trim.

DANGER
Risk of death due to using the socket incorrectly

IN PARTICULAR, YOU COULD RECEIVE AN ELECTRIC SHOCK:

- if you touch the inside of the socket
- if you insert unsuitable devices or objects into the socket

- ► Do not touch the inside of the socket.
- ► Only connect suitable devices to the socket.

DANGER
Risk of fatal injuries due to electric shock

If you clean the 230 V socket with a wet cloth, you can receive an electric shock.

There is a risk of fatal injury!

- ► Avoid the area around the 230 V socket when cleaning.

Requirements:

- Only connect devices with a suitable plug which conforms to the standards specific to the country you are in.
- Only connect devices up to a maximum of 150 W.
- Do not use multiple socket outlets.

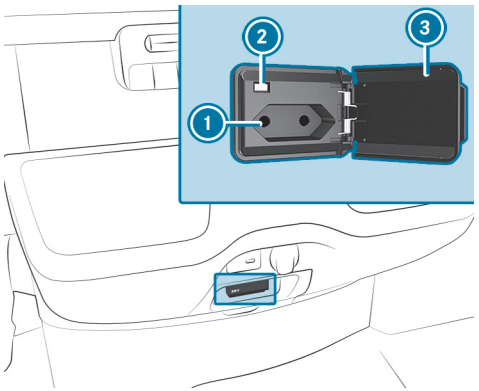

- When the on-board electrical system voltage is sufficient, indicator lamp (2) lights up.

If you will not be using 230 V power socket (1), keep flap (3) closed.

Charging a mobile phone using the USB port in the rear passenger compartment

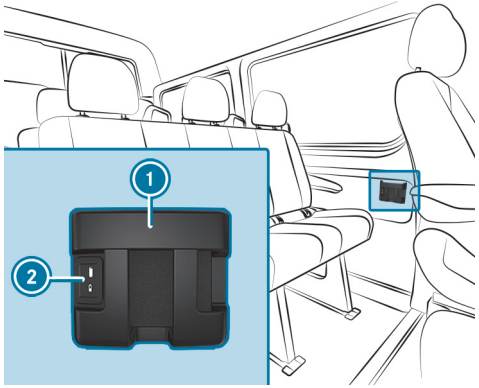

- Place the mobile phone in stowage compartment (1) and connect it to USB port (2) to charge.

Wirelessly charging the mobile phone and coupling with the exterior aerial

Notes on wirelessly charging the mobile phone

WARNING
Risk of injury due to unsuitable stowage of objects

If objects in the vehicle interior are stowed incorrectly, they may slide or be thrown around and hit vehicle occupants. In addition, cup holders, open stowage spaces and mobile phone receptacles may not, in the event of an accident, retain all the objects they contain.

There is a risk of injury, particularly in the event of braking manoeuvres or abrupt changes in direction.

- Always stow objects in such a way that they cannot be thrown around in these or similar situations.
- Always ensure that objects do not protrude from stowage compartments, luggage nets or stowage nets.
- Close the lockable stowage spaces before starting a journey.
- Stow and secure objects that are heavy, hard, pointed, sharp-edged, fragile or too large in the load compartment.

Observe the notes on loading the vehicle (→ page 593).

WARNING
Risk of fire if objects are placed in the mobile phone tray while charging

There is a risk of fire if you place additional objects in the mobile phone tray while charging. This is particularly the case when metallic objects are involved.

- Do not place any objects, especially metal objects such as coins, in the mobile phone tray while charging.

NOTE
Damage to objects caused by placing them in the mobile phone stowage compartment

If objects are placed in the mobile phone stowage compartment, these may be damaged by electromagnetic fields.

- Do not place credit cards, storage media, ski passes or other objects sensitive to electromagnetic fields in the mobile phone stowage compartment.

NOTE
Damage to the mobile phone stowage compartment caused by liquids

If liquids enter the mobile phone stowage compartment, the compartment may be damaged.

► Ensure that no liquids enter the mobile phone stowage compartment.

OBSERVE THE FOLLOWING NOTES ON WIRELESS CHARGING:

- The charging function is only available when the drive system has been started.
- In some cases, it may not be possible to charge small mobile phones at every position of the mobile phone compartment.
- It may not be possible to charge large mobile phones that do not rest in the mobile phone receptacle.
- The mobile phone can warm up during the charging process. This depends on the applications (apps) currently running.
- For more efficient charging, the protective case should be removed from the mobile phone. Protective cases designed for wireless charging are an exception.
- When charging, the mat should be used if possible.

Charging the mobile phone wirelessly in the front

WARNING
Risk of injury due to unsuitable stowage of objects

If objects in the vehicle interior are stowed incorrectly, they may slide or be thrown around and hit vehicle occupants. In addition, cup holders, open stowage spaces and mobile phone receptacles may not, in the event of an accident, retain all the objects they contain.

There is a risk of injury, particularly in the event of braking manoeuvres or abrupt changes in direction.

► Always stow objects in such a way that they cannot be thrown around in these or similar situations.

► Always ensure that objects do not protrude from stowage compartments, luggage nets or stowage nets.

► Close the lockable stowage spaces before starting a journey.

► Stow and secure objects that are heavy, hard, pointed, sharp-edged, fragile or too large in the load compartment.

- Observe the notes on loading the vehicle (⟶ page 593).

Requirements

- The mobile phone must be suitable for wireless charging.

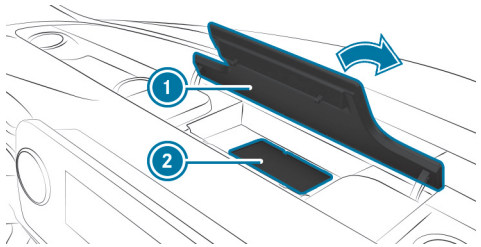

- Open the flap of storage compartment 1 above the media display.
- With the display facing upwards, place the mobile phone as centrally as possible on the marked surface of mat 2.

  When the charging symbol is shown in the multimedia system, the mobile phone is being charged.

  Malfunctions during charging are shown in the media display of the multimedia system.

ⓘ The mat can be removed for cleaning, e.g. using clean, lukewarm water.

Fitting and removing the floor mats

WARNING
Risk of accident due to objects in the driver's footwell

Objects in the driver's footwell may impede pedal travel or block a depressed pedal.

This will jeopardise the operating and road safety of the vehicle.

- Stow all objects in the vehicle securely so that they cannot get into the driver's footwell.
- Make sure that there is always sufficient clearance for the pedals.
- Always fit the floor mats securely and as prescribed.
- Do not use loose floor mats and do not place floor mats on top of one another.

INSTALLING

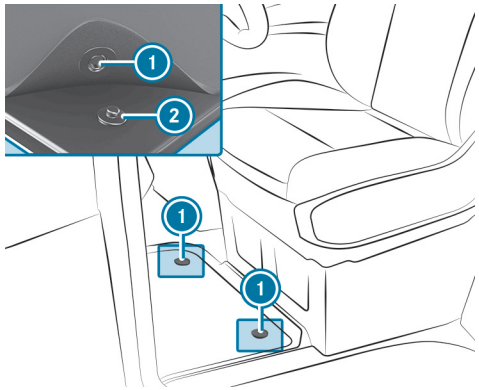

- Slide the seat backwards.
- Lay the floor mat in the footwell so that it fits.
- Press studs (1) onto holders (2), if applicable.
- Fit the driver and passenger footwell floor mats to the contact area.
- Adjust the seat.

REMOVING

- Slide the corresponding seat backwards and pull the floor mat off holders (2), if applicable.
- Remove the floor mat.

Back to Contents

Light and vision

This interactive PDF works like a website – tap or click a button to jump straight to where you want to go.
You can return here at any time via the navigation bar at the top left.

Lighting
Adjusting the interior lighting
Changing bulbs
Windscreen wipers
Mirrors

Lighting

Notes on adjusting the lights when driving abroad

Vehicles with halogen or static LED headlamps: Changing the headlamps is not necessary. The legal requirements will also be fulfilled in countries with left- and right-hand traffic.

Information about lighting systems and your responsibility

The vehicle's various lighting systems are only aids. The vehicle driver is responsible for adjusting the vehicle's lighting to the prevailing light, visibility, statutory conditions and traffic conditions.

Light switch

OPERATING THE LIGHT SWITCH

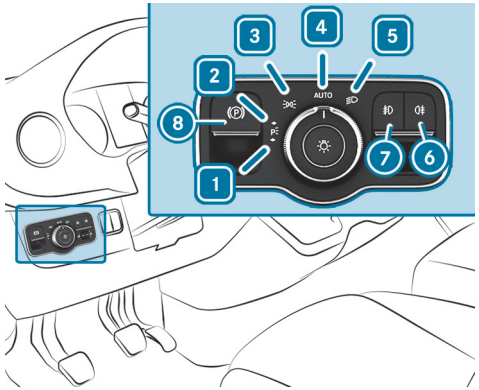

- 1 Activates or deactivates left-hand parking lights.
- 2 Activates or deactivates right-hand parking lights.
- 3 Activates or deactivates sidelights and licence plate and instrument lighting.
- 4 AUTO Activates or deactivates automatic driving lights/daytime running lights (preferred light switch position).
- 5 Activates or deactivates low beam/high beam.
- 6 Activates or deactivates the rear fog light.

- ⑦ [ɸD] Activates or deactivates the front fog light.
- ⑧ Applies or releases the electric parking brake (→ page 366).

ⓘ If you hear a warning tone when exiting the vehicle, the lights may still be on.

ⓘ If you turn on the parking lights, there will be reduced sidelights on the selected vehicle side.
The turn signal light, the high beam and the headlamp flasher are operated with the combination switch (→ page 254).

NOTE
Battery discharging by operating the standing lights

Do not have the standing lights switched on over a period of several hours.

For vehicles that are wider than 2 m or longer than 6 m, single-sided parking lighting is not permitted in some countries. In this case, the sidelights are also switched on in the parking lights position.

If the battery is heavily discharged, the sidelights or parking lights will switch off automatically to enable the next vehicle start.

AUTOMATIC DRIVING LIGHTS FUNCTION

WARNING
Risk of accident when the dipped beam is switched off in poor visibility

When the light switch is set to [AUTO], the dipped beam may not be switched on automatically if there is fog, snow or other causes of poor visibility such as spray.

- In such cases, turn the light switch to [≡D].

The automatic driving lights are only an aid. Responsibility for vehicle lighting rests with you.
Turn the light switch from [AUTO] to [≡D] immediately in the event of fog, snow or spray. Otherwise, the driving light will be temporarily interrupted.

TO SWITCH THE AUTOMATIC DRIVING LIGHTS ON:

- Turn the light switch to the [AUTO] position. Switch the power supply on: the standing lights will automatically switch on or off depending on the brightness of the ambient light.

  The daytime running lights will be switched on when the vehicle is started. The standing lights and the low beam will also switch on or off depending on the brightness of the ambient light.

  When the low beam is switched on, the [≡D] indicator lamp on the instrument cluster will also switch on.

ACTIVATING/DEACTIVATING THE FOG LIGHTS

Requirements

- The light switch is in the [≡D] or [AUTO] position.
- The vehicle has been switched on or started.

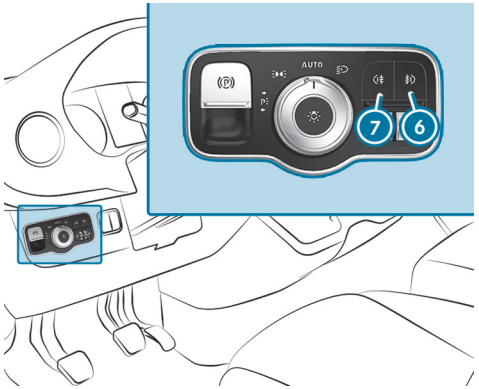

- **To switch the front fog light on or off:** press the button 7.
- **To switch the rear fog light on or off:** press the button 6.

Observe the country-specific regulations for using the rear fog lamp.

ADJUSTING HEADLAMP RANGE

Requirements

- The vehicle has been started.

You can use the headlamp range adjuster to adjust the light cone of the headlamps to the vehicle's load condition. When the seats are occupied or the load compartment is laden or unladen, the light cone will change. This may cause visibility conditions to deteriorate and you could dazzle oncoming traffic.

In vehicles with LED headlamps, the headlamp range will be adjusted automatically.

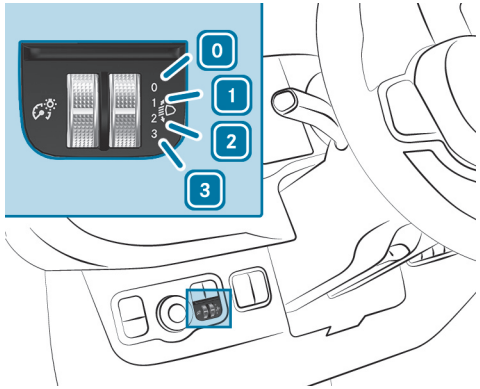

0 Driver's seat and front passenger seat occupied
1 Driver's seat, front passenger seat and rear seats occupied
2 Driver's seat, front passenger seat and rear seats occupied, load compartment or loading area laden
3 Driver's seat and front passenger seat occupied and maximum permissible rear axle load utlised

- Turn the headlamp range adjuster to the corresponding position.

  The road illumination should be 40 m to 100 m and the low beam must not dazzle oncoming traffic.

- If the vehicle is unladen, select position 0.

Operating the combination light switch

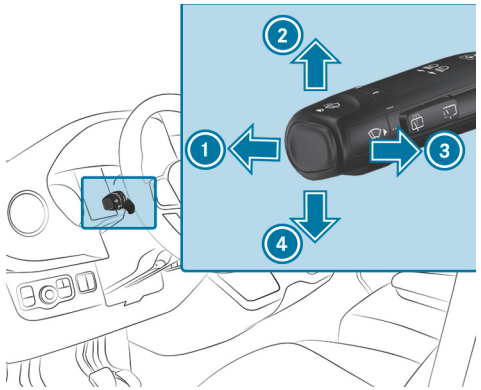

1. High beam
2. Right turn signal light
3. Headlamp flasher
4. Left turn signal light

- Use the combination switch to select the desired function.

SWITCHING ON HIGH BEAM

- Switch on the low beam (→ page 251).
- Push the combination switch forwards 1.

  The [≡D] indicator lamp on the instrument cluster will light up. The combination switch will return to its starting position.

> ⓘ The high beam will only switch on in position [AUTO] if it is dark and the vehicle is switched on.

- **To switch off:** push the combination switch forwards 1 or briefly pull it in the direction of arrow 3 (the headlamp flasher switches high beam off).

  The [≡D] indicator lamp on the instrument cluster will go out. The combination switch will return to its starting position.

> ⓘ **Vehicles with HighBeam Assist:** HighBeam Assist regulates switching of the high beam on and off while it is active (→ page 256).

HEADLAMP FLASHER

- Briefly pull the combination switch in the direction of the arrow 3.

TURN SIGNAL LIGHTS

- **To indicate:** push the combination switch in the required direction 2 or 4 until it engages. When significant steering movements are made, the combination switch will automatically reset itself.
- **Short indication:** briefly tap on the combination switch in the desired direction 2 or 4. The corresponding turn signal lamp will flash three times.

Switching the hazard warning light system on/off

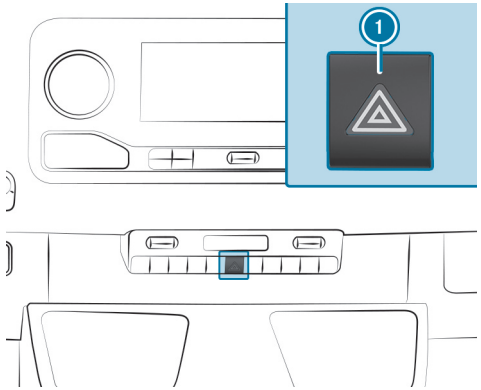

► Press the 1 button.

If you operate a turn signal indicator while the hazard warning light system is switched on, only the turn signal lamps on the relevant side of the vehicle will light up.

THE HAZARD WARNING LIGHT SYSTEM WILL SWITCH ON AUTOMATICALLY IN THE FOLLOWING SITUATIONS:

- The airbag is deployed
- The vehicle is heavily braked from a speed of more than 70 km/h to a standstill.

If the hazard warning light system has automatically switched on, press hazard warning lamp switch 1 to switch it off.

The hazard warning light system will automatically switch off when the vehicle regains a speed of more than 10 km/h after maximum full-stop braking.

ⓘ The hazard warning light system will work even when the vehicle has been switched off.

Cornering light function

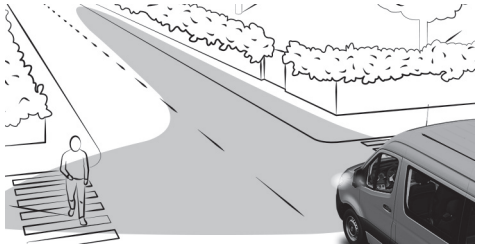

The cornering light improves the illumination of the carriageway over a wide angle in the turning direction, e.g. enabling better visibility in tight bends.

THE FUNCTION IS ACTIVE UNDER THE FOLLOWING CONDITIONS:

- Your speed is less than 40 km/h and the turn signal light has been switched on or the steering wheel is turned.
- Your speed is between 40 km/h and 70 km/h and the steering wheel is turned.

The cornering light may still light up for a short time but will be switched off automatically after a maximum of three minutes.

ⓘ When reverse gear is engaged, the lighting switches to the opposite side.

Highbeam Assist

ADAPTIVE HIGHBEAM ASSIST FUNCTION

WARNING
Risk of accident despite Adaptive Highbeam Assist

ADAPTIVE HIGHBEAM ASSIST DOES NOT REACT TO:

- road users without lights, e.g. pedestrians
- road users with poor lighting, e.g. cyclists
- road users whose lighting is obstructed, e.g. by a barrier

On very rare occasions, Adaptive Highbeam Assist may fail to recognise other road users with their own lighting, or may recognise them too late.

In these, or in similar situations, the automatic high beam will not be deactivated or will be activated despite the presence of other road users.

► Always observe the road and traffic conditions carefully and switch off the high beam in good time.

THE ADAPTIVE HIGHBEAM ASSIST AUTOMATICALLY SWITCHES BETWEEN THE FOLLOWING SETTINGS:

- Low beam
- High beam

The system detects that vehicle lights are approaching in the opposite direction or driving ahead of the vehicle.

AT SPEEDS GREATER THAN 30 KM/H, THE SYSTEM WILL SWITCH TO THE FOLLOWING SETTING:

- If no other road users are detected, high beam will switch on automatically.

AT SPEEDS LOWER THAN 25 KM/H OR IF THERE IS SUFFICIENT STREET LIGHTING, THE SYSTEM WILL SWITCH TO THE FOLLOWING SETTING:

- High beam will automatically switch off.

SYSTEM LIMITS
Adaptive Highbeam Assist cannot take the road, weather or traffic conditions into consideration.

THE DETECTION OF OBSTACLES MAY BE RESTRICTED IF:

- visibility is poor, e.g. in fog, heavy rain or snow.
- the sensors are dirty or covered.

Adaptive Highbeam Assist serves solely as an aid. You are responsible for ensuring correct vehicle lighting in accordance with the prevailing light, visibility and traffic conditions.

The system's optical sensor is located behind the windscreen near the overhead control panel.

SWITCHING HIGHBEAM ASSIST ON/OFF

WARNING
Risk of accident despite Adaptive Highbeam Assist

ADAPTIVE HIGHBEAM ASSIST DOES NOT REACT TO:

- road users without lights, e.g. pedestrians
- road users with poor lighting, e.g. cyclists
- road users whose lighting is obstructed, e.g. by a barrier

On very rare occasions, Adaptive Highbeam Assist may fail to recognise other road users with their own lighting, or may recognise them too late.

In these, or in similar situations, the automatic high beam will not be deactivated or will be activated despite the presence of other road users.

► Always observe the road and traffic conditions carefully and switch off the high beam in good time.

Requirements

- The light switch is in the AUTO position.

► **To switch on:** switch on high beam using the combination switch.
When the high beam is switched on automatically in the dark, the indicator lamp will light up on the instrument cluster display.

► **To switch off:** switch off high beam using the combination switch.

Setting the exterior lighting switch-off delay time

Requirements:

- The light switch is in the AUTO position.

Multimedia system:
Settings ▸▸ Lights ▸▸ Interior/exterior lighting ▸▸ Exterior lighting switch-off delay

► Set a switch-off delay time.

When the vehicle is switched off, the exterior lighting will be activated for the set time.

Activating and deactivating the surround lighting

Multimedia system:
Settings ▸▸ Lights ▸▸ Interior/exterior lighting ▸▸ Surround lighting

► Activate or deactivate the function.

The surround lighting will remain on for 40 seconds after the vehicle is unlocked. When you start the vehicle, the surround lighting will be deactivated and the automatic driving lights activated.

Exterior lighting

ACTIVATING/DEACTIVATING THE BEACON

WARNING
Risk of accident due to automatic deactivation of the beacon

The beacon switches off automatically when the vehicle is switched off, as soon as the on-board electrical system voltage drops to a critical level.

- Take additional suitable safety precautions, e.g. set up the warning triangle.

ACTIVATING AND DEACTIVATING THE BEACON

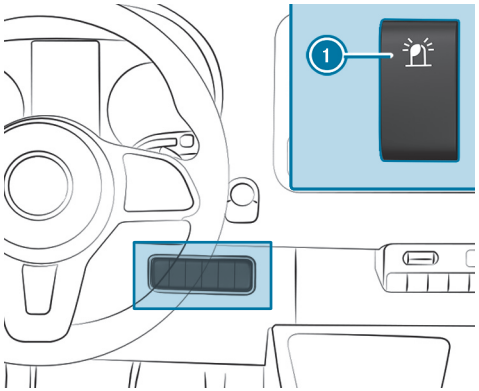

- **To activate:** press the upper section of switch 1.
  The indicator lamp on the switch will light up.
- **To deactivate:** press the lower section of switch 1.

ATTACHING A BEACON

WARNING
Risk of injury if unsuitable climbing aids are used

IN THE EVENT THAT YOU USE OPENINGS IN THE BODYWORK OR ATTACHMENTS AS STEPS, YOU COULD:

- Slip and/or fall.
- Damage the vehicle and thus slip and fall.

- Always use non-slip, stable climbing aids, e.g. a suitable ladder.

WARNING
Risk of accident and injury if the maximum permitted headroom is not observed

With the beacon attached, the risk of exceeding the maximum permissible headroom increases.

If the maximum permissible headroom is exceeded, the beacon may break off as you enter the restricted space and be thrown around at high speed. Other road users may be hit and injured by the beacon. There is the risk of an accident.

- Observe the signposted headroom.
- Do not enter the space if you are uncertain whether the headroom is sufficient.
- Attach the beacon to the vehicle only for the duration of the assignment.

NOTE
Vehicle damage due to failure to observe the maximum permissible clearance height

If the vehicle height exceeds the maximum permissible clearance height, the roof and other vehicle parts may be damaged.

- Please observe the indicated maximum clearance height.
- If the vehicle exceeds the permissible clearance height, do not drive in.
- Take the modified vehicle height in the case of roof superstructures or other carrier systems into account.

If a beacon is mounted on the vehicle, check that it is securely attached before each trip.

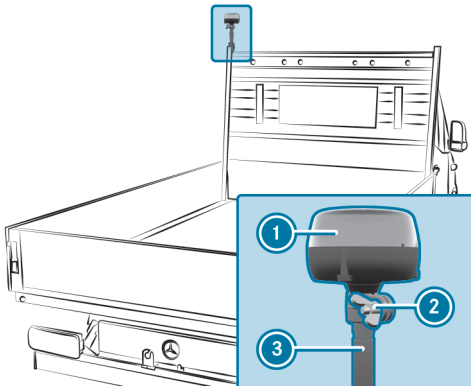

- Loosen wing nut 2.
- Push beacon 1 onto stand 3 as far as it will go.
- Tighten wing nut 2.
- Ensure that beacon 1 is properly attached.

Adjusting the interior lighting

Adjusting the interior lighting

Depending on the respective equipment, certain buttons may be unavailable or unassigned.

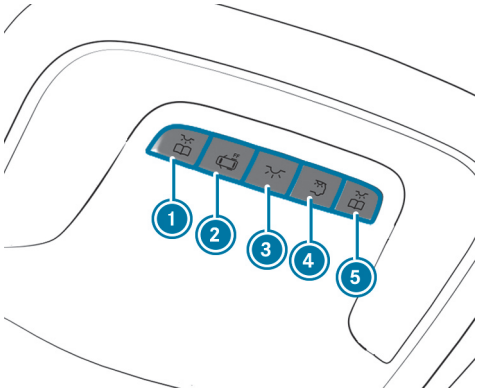

1 Front left reading lamp
2 Automatic interior lighting control
3 Front interior lighting
4 Rear or load compartment lighting
5 Front right reading lamp

► 1 Switches the front-left reading lamp on/off

THE AUTOMATIC INTERIOR LIGHTING SWITCHES THE LIGHTING ON AUTOMATICALLY IN THE FOLLOWING INSTANCES, FOR EXAMPLE:

- The vehicle is unlocked.
- A door is opened.

Setting the interior lighting for ABH[1] add-on equipment

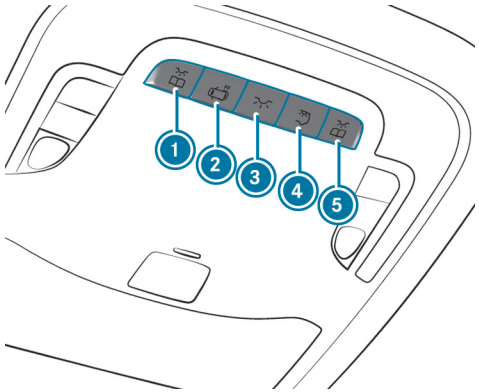

[1] ABH = Body manufacturer

► **To switch the front left reading lamp on/off:** press the button 1.

- **To deactivate automatic interior lighting control:** press the button ②.
  Otherwise, the interior light control switches on automatically, whereby, forexample:
  - you unlock the vehicle
  - you open a door
- **To switch the front interior lighting on/off:** press the button ③.
- **To switch body manufacturer lamps on/off:** press the button ④ (not assigned depending on the respective vehicle equipment).
  - Your vehicle may be equipped with a functional feedback system: will light up in red if the body manufacturer lamps are switched on.
  - If the body manufacturer lamps have been switched on manually, they will also remain switched on for an extended period of time after locking.

ⓘ This period of time is shortened if there is undervoltage in the starter battery.

ⓘ If the body manufacturer lamps have been switched off automatically to protect the battery, restart the vehicle before switching them on again.

ⓘ The body manufacturer lamps can be switched on only when the battery voltage is stable.

- **To switch the front right reading lamp on/off:** press the button ⑤.

Setting the interior lighting for bus interior light control

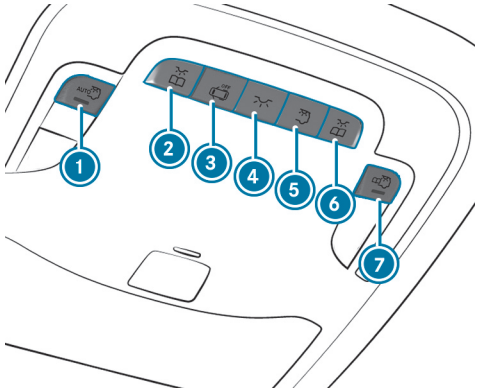

① Activates/deactivates the bus function
② Switches the front left reading lamp on/off
③ Activates/deactivates automatic interior lighting control
④ Switches the front interior lighting on/off
⑤ Switches passenger compartment lighting on/off
⑥ Switches the front right reading lamp on/off
⑦ Enables/disables reading lighting in the passenger compartment

- **To activate the bus function:** press the button ①.
  The LED lights up.
  THE BUS FUNCTION WILL BE IN ONE OF THE FOLLOWING MODES:
  - **Stop mode**

If the vehicle comes to a standstill at a stop, forexample, and the passenger door opens, the passenger compartment will be illuminated (undimmed).

- **Driving mode**
  If all doors are closed and the vehicle is travelling faster than walking pace, the passenger compartment will be illuminated (dimmed).
- **Automatic off mode**
  If automatic interior lighting control (3) is deactivated, thereby activating automatic off mode, the passenger compartment will be continuously illuminated (dimmed).

If the bus function is activated, the modes can be offset via the button (5) that switches passenger compartment lighting on/off. Passenger compartment lighting will then be deactivated completely. When the button (5) is pressed again to switch passenger compartment lighting on/off, the bus function will once again adopt one of the modes.

- If automatic interior lighting control (3) was previously activated, automatic off mode will be rendered inactive once again.
- If automatic off mode was not previously activated, either driving mode or stop mode will be active.

ⓘ The bus function can be operated independently of the button (5) that switches passenger compartment lighting on/off. The passenger compartment lighting must not be switched on beforehand.

▶ **To deactivate the bus function:** press the button (1).
The LED will not light up.

▶ **To switch the front left reading lamp on/off:** press the button (2).

▶ **To deactivate automatic interior lighting control:** press the button (3).
The interior lighting control will switch on automatically if, forexample:
- you unlock the vehicle
- you open a door

▶ **To switch the front interior lighting on/off:** press the button (4).

▶ **To switch passenger compartment lighting on/off:** press the button (5).

▶ **To switch the front right reading lamp on/off:** press the button (6).

▶ **To enable reading lighting in the passenger compartment:** press the button (7).
The LED lights up.
Passengers will be able to switch the reading lamps on and off.

▶ **To deactivate reading lighting in the passenger compartment:** press the button (7).
The LED will not light up.
Passengers will no longer be able to operate the reading lamps.

Switching the rear compartment interior lighting on/off

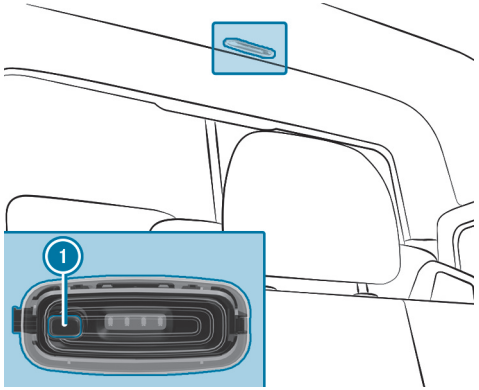

► (1) Switches rear/load compartment lighting on or off

Motion detector

WARNING
Risk of injury due to laser beam of the motion detector

The motion detector emits non-visible radiation from LEDs that are classified as class 1M lasers.

THIS MAY DAMAGE THE RETINA IN THE FOLLOWING SITUATIONS:

- If you look directly into the unfiltered laser beam of the motion detector for an extended period.
- If you look directly into the laser beam of the motion detector with optical instruments, such as glasses or magnifying glasses.

► Never look directly into the motion detector.

The motion detector is located in the load compartment behind the partition, in the middle of the roof.

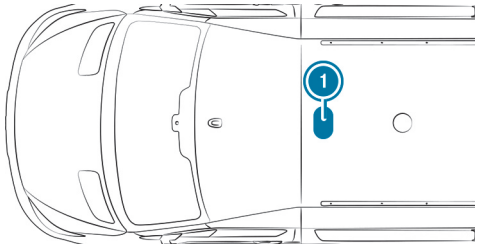

(1) Position of motion detector

If the vehicle is equipped with a motion detector, the load compartment lighting is also activated via the motion detector.

If the motion detector detects movement in the load compartment while the vehicle is stationary, the load compartment lighting will switch on for approximately two minutes.

THE LOAD COMPARTMENT LIGHTING WILL BE SWITCHED ON VIA THE MOTION DETECTOR IN THE FOLLOWING SITUATIONS:

- The vehicle is stationary, the parking brake is applied and you are not depressing the brake pedal.
- **Vehicles with automatic transmission:** the selector lever is in position P and you are not depressing the brake pedal.
- The vehicle has not been locked from the outside using the key.

If no change to the vehicle (e.g. a door opening) is detected over several hours, the motion detector will automatically switch off. This prevents the battery from discharging.

Switching the interior lighting switch-off delay time on/off

Multimedia system:

Settings ▶▶ Lights ▶▶ Interior/exterior lighting ▶▶ Interior lighting switch-off delay

- Activate or deactivate the function.

  If this function is active, the interior lighting will be switched on for a short time after the end of the journey.

Changing bulbs

Instructions for replacing illuminants

WARNING
Risk of burns from hot component parts whilst replacing a bulb

Bulbs, lamps and plug connectors can become very hot during operation.

When replacing a bulb, you could burn yourself on these component parts.

► Allow the component parts to cool down before replacing the bulbs.

IMPORTANT SAFETY NOTES

- Before changing the bulbs, switch off the vehicle's lighting system. This will prevent a short circuit.
- Use only spare bulbs of the same type and with the correct voltage.
- Use bulbs only in enclosed lamps that have been specifically designed to house them.
- Do not use any illuminant that has been dropped or has scratches on its glass tube. Otherwise, the illuminant may explode.
- The illuminant may explode under the following conditions:
  - if it is hot and you touch it
  - if you drop it
  - if you scratch it
- Stains on the glass tube will reduce the service life of the illuminant. Do not touch the glass tube with your bare hands. If necessary, clean the glass tube with alcohol or spirits while it is cold and wipe it down with a lint-free cloth.
- Protect illuminants from humidity and do not bring them into contact with liquids.

Always ensure the bulbs are firmly secured.

If your vehicle is equipped with LED modules, you can check this as follows: the light cone will move from top to bottom and back again when the vehicle starts. For this to work, low beam needs to have been switched on before the vehicle is started.

Bulbs and lamps are major elements in vehicle safety. Therefore, ensure that they are always working. Have the headlamp adjustment checked regularly.

If the new illuminant also does not light up, consult a qualified specialist workshop.

Replacing front light bulbs (vehicles with halogen headlamps)

OVERVIEW OF ILLUMINANT TYPES
You can replace the following light sources.

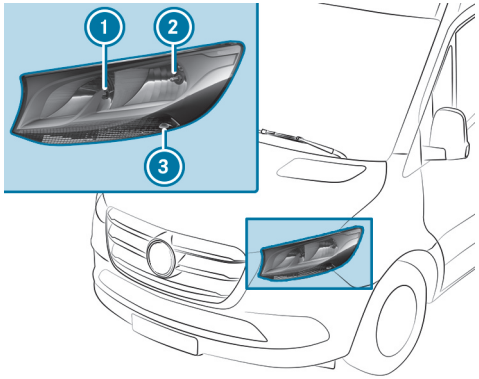

Halogen headlamps

1. High beam/daytime running lights: H15 55 W/15 W
2. Low beam/perimeter light: H7 55 W/W 5 W
3. Turn signal light: PY 21 W

REPLACING ILLUMINANTS IN THE HALOGEN HEADLAMP

> ⚠ **WARNING**
> Risk of burns from hot component parts whilst replacing a bulb
>
> Bulbs, lamps and plug connectors can become very hot during operation.
>
> When replacing a bulb, you could burn yourself on these component parts.
>
> ► Allow the component parts to cool down before replacing the bulbs.

Requirements

- **Low beam:** illuminant type H7 55 W
- **High beam/daytime running lights:** illuminant type H15 55 W/15 W
- **Perimeter lights:** illuminant type W 5 W
- **Turn signal lights:** illuminant type PY 21 W

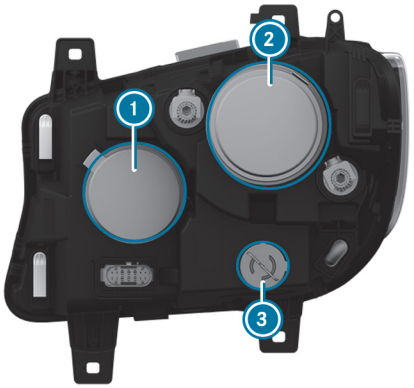

1. High beam/daytime running lights housing cover
2. Low beam/perimeter light housing cover
3. Turn signal light socket

► Switch off the lighting system.

► **High beam/daytime running lights:** pull the housing cover (1) rearward to remove it.

► Turn the socket anti-clockwise and pull it out.

► Remove the illuminant from the socket.

► Insert the new illuminant into the socket so that the base of the bulb rests fully against the base of the socket.

► Insert the socket and turn it clockwise.

- Attach the housing cover (1).
- **Low beam/perimeter light:** pull the housing cover (2) rearward to remove it.
- Pull the socket rearward to remove it.
- Remove the illuminant from the socket.
- Insert the new illuminant into the socket so that the base of the bulb rests fully against the base of the socket.
- Align and insert the socket.
- Attach the housing cover (2).
- **Turn signal light:** Turn the socket (3) anti-clockwise and remove.
- Gently turn the illuminant anti-clockwise and take it out of the socket.
- Insert the new illuminant into the socket and turn it clockwise.
- Insert the socket (3) and turn it clockwise.

ADDITIONAL TURN SIGNAL LIGHT

> ⚠ **WARNING**
> Risk of burns from hot component parts whilst replacing a bulb
>
> Bulbs, lamps and plug connectors can become very hot during operation.
>
> When replacing a bulb, you could burn yourself on these component parts.
>
> - Allow the component parts to cool down before replacing the bulbs.

Requirements

- **Additional turn signal light (all-wheel drive vehicles):** bulb type P 21 W

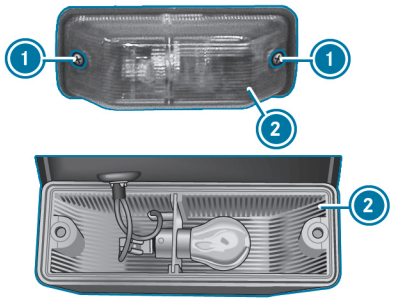

- Switch off the lighting system.
- Unscrew screws (1) and remove light lens (2).

- Gently turn the illuminant anti-clockwise and take it out of the socket.
- Insert the new illuminant into the socket and turn it clockwise.
- Position light lens (2) and tighten screws (1) .

Replacing rear illuminants (panel van and Tourer)

OVERVIEW OF REAR ILLUMINANT TYPES (PANEL VAN AND TOURER)

You can replace the following illuminants.

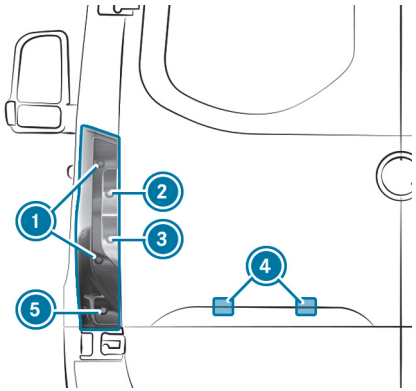

Vehicles with standard tail lamps

(1) Brake lights/tail lights/perimeter lights: P 21 W
(2) Turn signal light: PY 21 W
(3) Reversing light: P 21 W
(4) Licence plate lighting: W 5 W
(5) Rear fog light: P 21 W

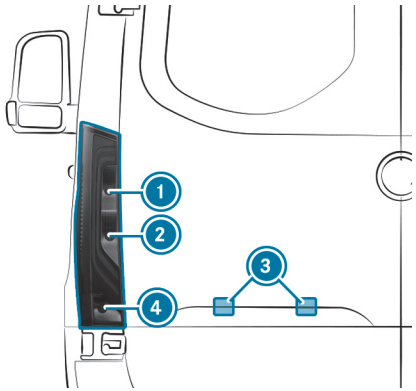

Vehicles with partial LED tail lamps

(1) Turn signal light: PY 21 W
(2) Reversing light: P 21 W
(3) Licence plate lighting: W 5 W
(4) Rear fog light: P 21 W

REPLACING TAIL LAMPS (PANEL VAN AND TOURER)

WARNING
Risk of burns from hot component parts whilst replacing a bulb

Bulbs, lamps and plug connectors can become very hot during operation.

When replacing a bulb, you could burn yourself on these component parts.

- Allow the component parts to cool down before replacing the bulbs.

Requirements:

- **Brake light/tail light/perimeter light:** illuminant type P 21 W
- **Turn signal lights:** illuminant type PY 21 W
- **Reversing lights:** illuminant type P 21 W
- **Rear fog light:** illuminant type P 21 W

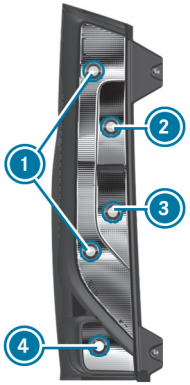

1. Brake light/tail light/perimeter light
2. Turn signal lights
3. Reversing lights
4. Rear fog light

► Switch off the lighting system.

► Open the rear-end door.

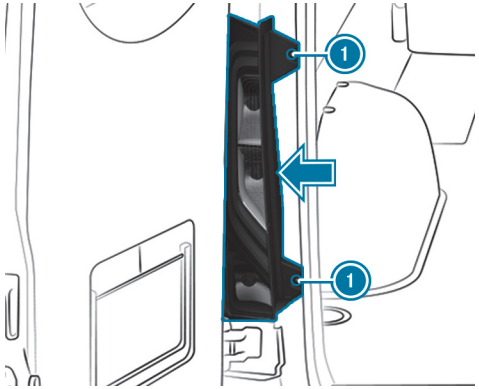

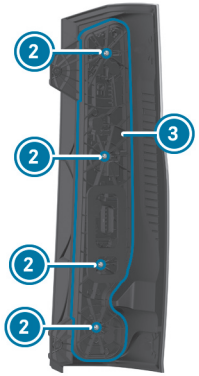

► **To remove:** loosen screws 1 and pull out the tail lamp in the direction of the arrow.

► Remove the plug from bulb mount 3.

► Loosen screws 2 and remove bulb mount 3 from the tail lamp.

► Gently turn the illuminant anti-clockwise and take it out of the socket.

► Insert the new illuminant into the socket and turn it clockwise.

- **To install:** set bulb mount (3) on the tail lamp and screw in screws (2).
- Press the plug into bulb mount (3).
- Insert the tail lamp and screw in screws (1).

REPLACING THE LICENCE PLATE LIGHTING BULBS

Requirements

- **Licence plate lighting:** illuminant type W 5 W

- Switch off the lighting system.
- Place a screwdriver, forexample, into the opening (2) between the lamp (3) and the panel (1) and carefully prise off the lamp (3).
- Remove the lamp (3) from the panel (1).
- Rotate the bulb holder approx. 45° and detach it from the lamp.
- Remove the illuminant .
- Insert the new illuminant into the bulb holder.
- Insert the bulb holder into the lamp and rotate it approx. 45°.
- Insert the lamp into the panel opening until it engages.

Replacing rear light bulbs (chassis)

OVERVIEW OF REAR LIGHT SOURCE TYPES (CHASSIS)

You can replace the following light sources.

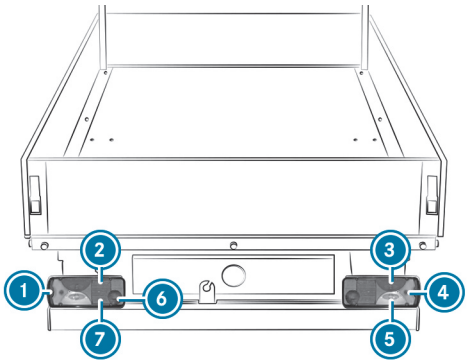

Example

Vehicles with standard tail lamps

(1) Clearance lamp: R 5 W
(2) Tail light: R 5 W
(3) Brake light: P 21 W
(4) Turn signal light: PY 21 W
(5) Reversing light: P 21 W
(6) Rear fog light (driver's side): P 21 W
(7) Licence plate lighting: R 5 W

REPLACING THE TAIL LAMPS ON THE CHASSIS

WARNING
Risk of burns from hot component parts whilst replacing a bulb

Bulbs, lamps and plug connectors can become very hot during operation.

When replacing a bulb, you could burn yourself on these component parts.

- Allow the component parts to cool down before replacing the bulbs.

Requirements:

- **Rear fog lights:** light source type P 21 W
- **Licence plate lighting:** light source type R 5 W
- **Reversing lights:** light source type P 21 W
- **Turn signal lights:** light source type PY 21 W
- **Clearance lamps:** light source type R 5 W
- **Brake lights:** light source type P 21 W
- **Tail lights:** light source type R 5 W

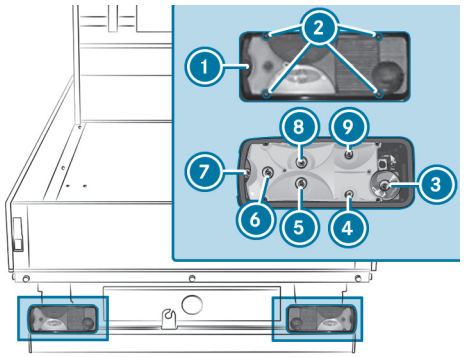

1. Light lens
2. Screws
3. Rear fog light
4. Licence plate lighting
5. Reversing light
6. Turn signal light
7. Clearance lamp
8. Brake light
9. Tail light

- Switch off the lighting system.
- Unscrew screws 2 and remove light lens 1.
- Remove the plug from the bulb mount.
- Gently turn the light source anti-clockwise and take it out of the socket.
- Insert the new light source into the socket and turn it clockwise.
- Position light lens 1 and tighten screws 2 .

Replacing interior light bulbs

REPLACING REAR INTERIOR LAMPS

WARNING
Risk of burns from hot component parts whilst replacing a bulb

Bulbs, lamps and plug connectors can become very hot during operation.

When replacing a bulb, you could burn yourself on these component parts.

- Allow the component parts to cool down before replacing the bulbs.

Requirements

For the standard bulb failure indicator function to work correctly, only light bulbs that are the same type and power as those installed during production may be used.

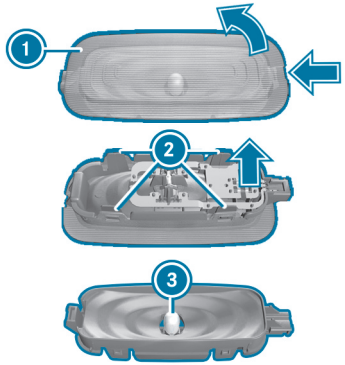

- Switch off the interior lighting.
- Press in the catch spring of lens 1 with a suitable object, e.g. a screwdriver, and then lever off the lens with the lamp housing.
- **To remove the lens from the lamp housing:** press the lugs of lens 2 inwards.
- Remove light bulbs 3 from the lamp housing.
- Insert the new light bulb.
- Position the lens on the lamp housing and engage it.
- Align the lens with the lamp housing and engage it.

Windscreen wipers

Switching the windscreen wipers on and off

Requirements

- The power supply is switched on.

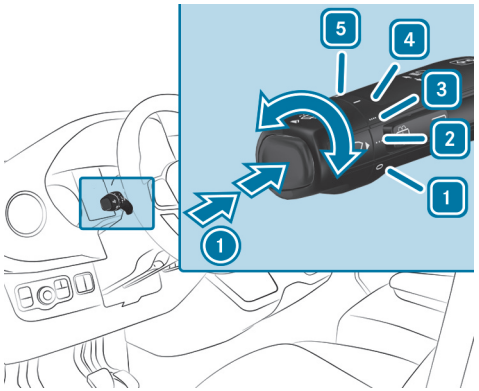

(1) Single wipe/wiping with washer fluid
1 0 Windscreen wipers off
2 ••• Intermittent wiping, normal
Vehicles with rain sensors: automatic wiping, normal
3 •••• Intermittent wiping, frequent
Vehicles with rain sensors: automatic wiping, frequent
4 — Continuous wiping, slow
5 = Continuous wiping, fast

- Turn the combination switch to the corresponding position 1 – 5.
- **Single wipe:** press button (1) on the combination switch in the direction of arrow as far as the first point of resistance.
- **Washing:** press button (1) on the combination switch in the direction of arrow as far as the second point of resistance.

Switching the rear window wiper on and off

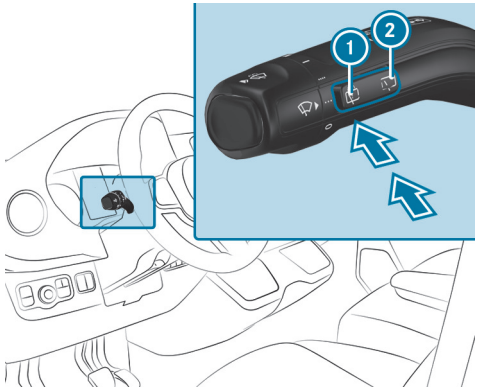

(1) Single wipe/wash
(2) Intermittent wiping

- **Single wipe:** press button (1) to the point of resistance.

- **Wiping with washer fluid:** press button (1) beyond the point of resistance.
- **To switch intermittent wiping on or off:** press button (2).
  The [ ] symbol will appear on the instrument cluster when the rear window wiper is switched on.

Replacing the windscreen wiper blades

> **WARNING**
> Risk of becoming trapped if the windscreen wipers are switched on while wiper blades are being replaced
>
> If the windscreen wipers begin to move while you are changing the wiper blades, you can be trapped by the wiper arm.
>
> - Always switch off the windscreen wipers and vehicle before changing the wiper blades.

> **WARNING**
> Risk of injury from using the windscreen wipers when the bonnet is open
>
> If the windscreen wipers start moving when the bonnet is open, you could be trapped by the wiper linkage.
>
> - Always switch off the windscreen wipers and vehicle before opening the engine bonnet.

Replacing the wiper blades

> ⓘ If the wiper blades are worn out, they will no longer wipe the windscreen properly. Replace the wiper blades twice a year, preferably in spring and autumn.

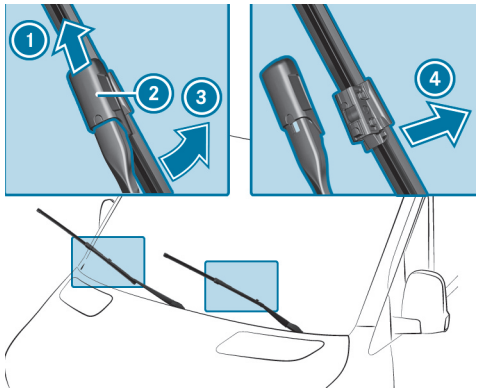

- Fold the wiper arm away from the windscreen.
- Hold wiper arm and fold the wiper blade away from wiper arm in the direction of arrow (3) as far as it will go.
- Slide catch (2) upwards in the direction of arrow (1) until it engages.
- Fold the wiper blade back onto the wiper arm.
- Remove the wiper blade from the wiper arm in the direction of arrow (4).
- Insert new wiper blade in the holder on wiper arm.

WHEN DOING SO, TAKE INTO ACCOUNT THE DIFFERENT LENGTHS OF THE WIPER BLADES:

- Driver's side: long wiper blade

- Front passenger side: short wiper blade

► Slide catch ② downwards until it engages.

► Fold wiper arm back onto the windscreen.

Replacing the windscreen wiper blades (WET WIPER SYSTEM)

WARNING
Risk of becoming trapped if the windscreen wipers are switched on while wiper blades are being replaced

If the windscreen wipers begin to move while you are changing the wiper blades, you can be trapped by the wiper arm.

► Always switch off the windscreen wipers and vehicle before changing the wiper blades.

WARNING
Risk of injury from using the windscreen wipers when the bonnet is open

If the windscreen wipers start moving when the bonnet is open, you could be trapped by the wiper linkage.

► Always switch off the windscreen wipers and vehicle before opening the engine bonnet.

Replacing the wiper blades

ⓘ If the wiper blades are worn out, they will no longer wipe the windscreen properly. Replace the wiper blades twice a year, preferably in spring and autumn.

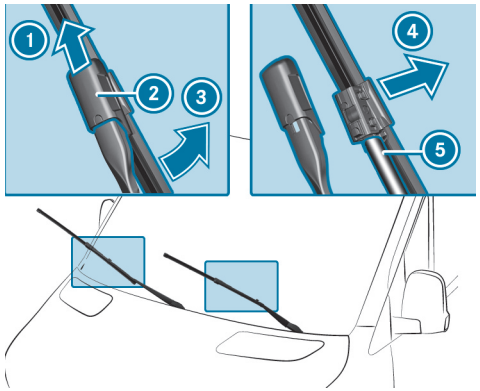

► Fold the wiper arm away from the windscreen.

► Hold the wiper arm and turn the wiper blade away from the wiper arm in the direction indicated by the arrow ③ as far as it will go.

► Slide the catch ② upwards in the direction indicated by the arrow ① until it engages.

► Remove the wiper blade from the wiper arm in the direction indicated by the arrow ④.

► Carefully remove the hose ⑤ from the wiper blade.

► Attach the hose ⑤ to the new wiper blade.

► Insert the new wiper blade into the holder on the wiper arm.

WHEN DOING SO, TAKE INTO ACCOUNT THE DIFFERENT LENGTHS OF THE WIPER BLADES:

- Driver's side: long wiper blade
- Front passenger side: short wiper blade

► Slide the catch ② downwards until it engages.

► Fold the wiper blade back onto the wiper arm.

► Fold the wiper arm back onto the windscreen.

Replacing rear window wiper blades

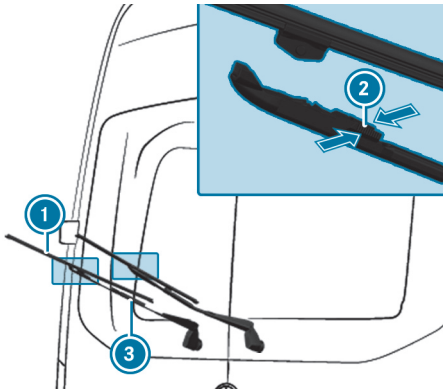

► Fold wiper arm ③ away from the rear window.

► Press both retaining clips ② together in the direction of the arrow and swivel the wiper blade away from the wiper arm.

► Pull wiper blade ① upwards out of the holder on wiper arm ③.

► Insert new wiper blade ① in the holder on wiper arm ③.

► Push new wiper blade ① onto wiper arm ③ until the retaining clips engage.

► Fold wiper arm ③ back onto the rear window.

Mirrors

Operating the outside mirrors

WARNING
Risk of accident due to adjusting the vehicle settings while the vehicle is in motion

YOU COULD LOSE CONTROL OF THE VEHICLE IN THE FOLLOWING SITUATIONS IN PARTICULAR:

- if you adjust the driver's seat, the head restraint, the steering wheel or the mirror while the vehicle is in motion
- if you fasten your seat belt while the vehicle is in motion

► Before starting the vehicle: in particular, adjust the driver's seat, head restraint, steering wheel and mirror, and fasten your seat belt.

WARNING
Risk of accident due to misjudgement of distance when using the outside mirror

The outside mirrors reflect objects on a smaller scale. The objects in view are in fact closer than they appear.

► Therefore, always look over your shoulder in order to ensure that you are aware of the actual distance between you and the road users driving behind you.

ADJUSTING THE OUTSIDE MIRRORS MANUALLY

► Adjust the outside mirrors to the correct position manually.

► **To engage an outside mirror that has been pushed out of position:** push the outside mirror into position manually.

ADJUSTING THE OUTSIDE MIRRORS ELECTRICALLY

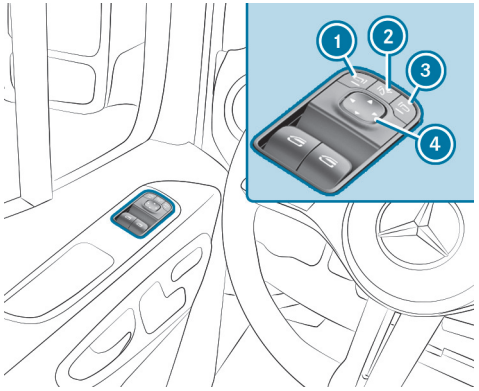

Example image

> **NOTE**
> Damage to the electric outside mirrors due to manual or forced folding in.
>
> If the electric outside mirrors are folded in or out manually, the outside mirrors may be damaged and will not engage properly.
>
> If the outside mirrors are not folded in at the car wash, the wash brushes may forcibly fold in and damage the outside mirrors.
>
> ▶ Fold and unfold the outside mirrors electrically only.
>
> ▶ Before washing the vehicle in an automatic car wash, fold in the outside mirrors.

▶ Before setting off, switch on the power supply or the vehicle.

▶ **To fold in or out:** briefly press button 2.

▶ **To select:** use button 1 or 3 to select the outside mirror to be adjusted.

▶ **To adjust:** use button 4 to set the position of the mirror surface.

▶ **To engage an outside mirror that has been pushed out of position:** press and hold button 2.

You will hear a click and the mirror will audibly engage in position. The outside mirror will be set to the correct position.

RESETTING THE OUTSIDE MIRRORS

> ⓘ If the battery has been disconnected or completely discharged, the outside mirrors must be reset. Only then will the automatic mirror folding function work properly.

▶ Switch on the power supply or the vehicle.

▶ Briefly press button 2.

HEATING THE OUTSIDE MIRRORS

▶ **Vehicles without a rear window heater:** at low temperatures, the mirror heater will switch on automatically once the vehicle has been started.

▶ **Vehicles with a rear window heater:** at low temperatures, the mirror heater will switch on automatically once the vehicle has been started. The mirror heater can also be switched on together with the rear window heater using the rear window heater button.

Using the digital rear-view mirror

The vehicle may be fitted with a digital inside rear-view mirror. This uses a rear-mounted camera on top of the roof to provide a better view to the rear.

The rear-view mirror can be used either as a standard rear-view mirror or as a display.

To prevent glare from the digital rear-view mirror, first set the digital rear-view mirror as the standard rear-view mirror.

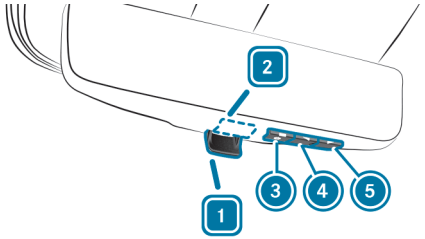

Digital image noise may occur on the display under certain circumstances in unfavourable lighting conditions.

Certain types of sunlight, e.g. sun low on the horizon or light from another intense light source, can reduce the display's contrast and cause it to become too bright. In such situations, objects on the display may be obscured or difficult to see. In these cases, be particularly careful and adapt your driving style accordingly.

Drivers must always wear the necessary personal visual aids required for them to drive a vehicle. Drivers with presbyopia (age-related long-sightedness) should, if necessary, wear visual aids with multifocal lenses to be sufficiently able to see traffic including via the displays.

ⓘ If the camera on top of the roof at the rear is dirty, the image may be impaired. In this case, clean the camera manually with a damp cloth. Observe the notes on cleaning the digital rear-view mirror (⟶ page 626).

- **To use the standard rear-view mirror:** move the switch to position 1.
- **To use the display:** move the switch to position 2.

ADJUSTING THE DISPLAY BRIGHTNESS

ⓘ The digital rear-view mirror is equipped with light sensors on the front and back and automatically adjusts the brightness of the display to the lighting conditions. Do not cover the light sensors, e.g. with a sticker.

- Press menu button 3 once.
- Press button 4 to reduce the display brightness.

or

- Press button 5 to increase the display brightness.

ADJUSTING THE ANGLE OF THE CAMERA

- Press menu button 3 twice.
- Press button 4 to move the angle downwards.

or

- Press button 5 to move the angle upwards.

ACTIVATING AND DEACTIVATING REVERSING CAMERA IMAGE

The vehicle may be equipped with a reversing camera with image in the inside rear-view mirror.

- To activate, put the vehicle in reverse gear or press button 5.

- To deactivate, take the vehicle out of reverse gear or press button 5 again.

ERROR MODE OF THE DIGITAL REAR-VIEW MIRROR
If a system error occurs, e.g. if the camera fails, a crossed-out camera will appear at the top left of the display and no camera image will be visible in the mirror.

- Switch to the standard rear-view mirror if there is a system error.

If the vehicle is equipped with a reversing camera with image in the inside rear-view mirror and a system error occurs, a crossed out camera with the number 2 will appear on the left side of the display.

In this case, no camera image is available for manoeuvring.

Dimming the inside rearview mirror

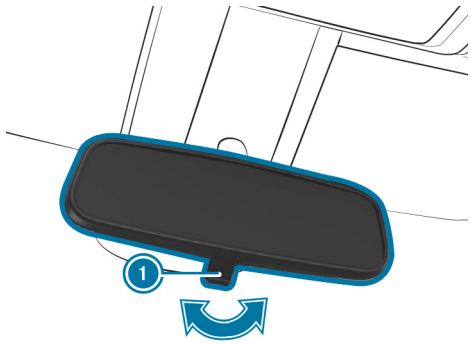

- Fold anti-dazzle lever 1 in the direction of the arrow.

Climate control

This interactive PDF works like a website – tap or click a button to jump straight to where you want to go.
You can return here at any time via the navigation bar at the top left.

Overview of climate control systems
Operating climate control systems
Operating air vents
Auxiliary heating
Operating load compartment ventilation

Overview of climate control systems

Heating system overview

1. Setting the temperature
2. REAR Switches the rear-compartment heating on/off
3. REAR Switches the rear window heater on/off (→ page 289)
4. Switches footwell air distribution on/off
5. MAX Switches windscreen demisting on/off (→ page 288)
6. Vehicles with stationary heater or booster heater: switches the stationary heater or booster heater on/off (→ page 294)
7. Setting the airflow

ⓘ The indicator lamps on the buttons signal that the functions in question have been activated.

TEMPMATIC overview

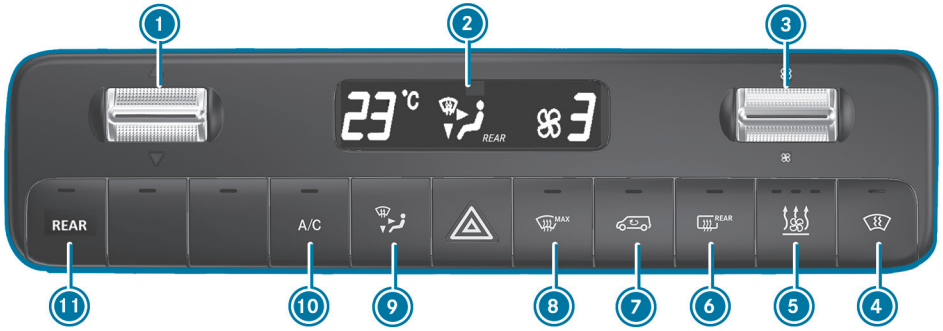

1. ▼▲ Sets the temperature
2. Display
3. Sets the airflow
4. Vehicles with windscreen heaters: switches the windscreen heater on/off (→ page 289)
5. Vehicles with stationary heaters or booster heaters: switches the stationary heater or booster heater on/off (→ page 294)
6. Vehicles with a rear window heater: REAR switches the rear window heater on/off (→ page 289)
7. Switches air-recirculation mode on/off (→ page 288)
8. MAX Switches windscreen demisting on/off (→ page 288)
9. Sets the air distribution (→ page 287)
10. A/C Switches the A/C function on/off (→ page 286)
11. REAR Vehicles with dual-zone climate control systems: sets the rear-compartment climate control/heating (indicator lamp flashes) (→ page 285)

ⓘ The indicator lamps on the buttons signal that the functions in question have been activated.

THERMOTRONIC overview

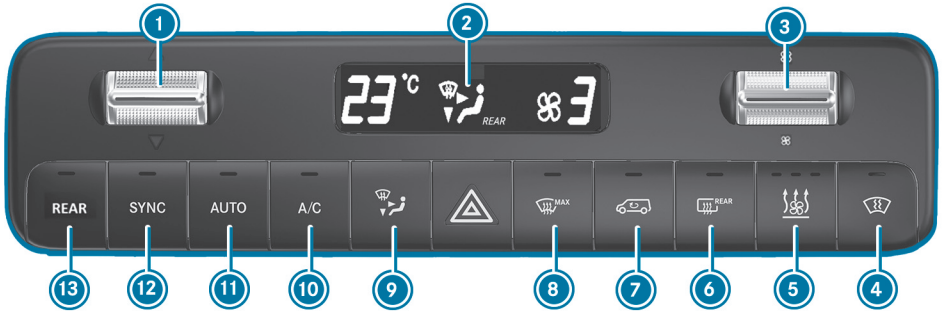

1. ▼▲ Sets the temperature
2. Display
3. Sets the airflow
4. Vehicles with windscreen heaters: switches the windscreen heater on/off (→ page 289)
5. Vehicles with stationary heaters or booster heaters: switches the stationary heater or booster heater on/off (→ page 294)
6. Vehicles with rear window heaters: REAR switches the rear window heater on/off (→ page 289)
7. Switches air-recirculation mode on/off (→ page 288)
8. MAX Switches windscreen demisting on/off (→ page 288)
9. Sets the air distribution (→ page 287)
10. A/C Switches the A/C function on/off (→ page 286)
11. AUTO Sets climate control to automatic mode, front (→ page 286) and rear (→ page 286)
12. SYNC Activates/deactivates synchronisation (→ page 287)
13. REAR Vehicles with dual-zone climate control systems: sets the rear-compartment climate control/heating (indicator lamp flashes) (→ page 285)

ⓘ The indicator lamps on the buttons signal that the functions in question have been activated.

Operating climate control systems

Switching the climate control system on/off

- **To switch on:** set the airflow to 1 or higher on the front-compartment menu.
- **To switch off:** set the airflow to 0 or OFF on the front-compartment menu.
  OFF will appear on the climate control system display.

ⓘ When the climate control system is switched off, the windows may mist up more quickly. Switch the climate control system off only briefly.

ⓘ If the front-compartment system has already been switched on and the rear-compartment system has been switched off, you can switch it on by turning up the blower on the rear-compartment menu. If the front-compartment system is switched on, the rear-compartment system will automatically switch on as well.

Setting the rear-compartment climate control

Requirements:

- The climate control system has been switched on (→ page 285).

SETTING THE TEMPERATURE AND AIRFLOW WITH TEMPMATIC AND THERMOTRONIC:

- Press the REAR button.
  The indicator lamp on the REAR button and the REAR symbol on the climate control system display will flash.
  The display will switch to the temperature and the blower on the rear menu.
- Use the ▼▲ and ⊛ rocker switches to set the required temperature and airflow on the rear-compartment menu.

ⓘ If there are significant differences between the temperature settings of the front and rear systems, these cannot be regulated accurately.

ⓘ If the rear-compartment climate control has been switched off, you can switch it on automatically by pressing the SYNC button.

DEPENDING ON THE VEHICLE EQUIPMENT, CLIMATE CONTROL WILL SWITCH ON THE ROOF-MOUNTED AIR-CONDITIONING SYSTEM OR REAR-COMPARTMENT HEATING AS REQUIRED:

- **Vehicles with roof-mounted air-conditioning systems:** the rear compartment can only be cooled.

- **Vehicles with rear-compartment heating:** the rear compartment can only be heated.

SWITCHING OFF REAR-COMPARTMENT CLIMATE CONTROL VIA TEMPMATIC AND THERMOTRONIC:

▶ Press the REAR button.

▶ If the indicator lamp on the REAR button and the REAR symbol on the climate control system display flash, set the airflow to 0 on the rear-compartment menu.

ⓘ Indicator lamp on: rear-compartment climate control has been switched on.
Indicator lamp off: rear-compartment climate control has been switched off.
Indicator lamp flashes: the setting mode of the rear-compartment climate control is active.

Switching the A/C function on/off

Requirements:

- The climate control system has been switched on (⟶ page 285).

The A/C function controls the climate and dries the air inside the vehicle.

▶ Press the A/C button.

ⓘ Switch off the A/C function only briefly. Otherwise, the windows could mist up more quickly.

ⓘ Condensation may leak from the underside of the vehicle in cooling mode. This is not a sign of a defect.

Automatically regulating climate control

Requirements:

- The climate control system has been switched on (⟶ page 285).

SWITCHING ON AUTOMATIC CLIMATE CONTROL

In automatic mode, the temperature, airflow and air distribution are regulated and kept constant.

▶ Press the AUTO button.

The display will show the temperature. The airflow and air distribution will disappear from the display.

SWITCHING OFF AUTOMATIC CLIMATE CONTROL

▶ Use the rocker switch to change the airflow setting or the button to change the air distribution (⟶ page 287).

The other setting will remain unaffected by the change.

Automatically controlling climate control in the rear

Requirements:

- Rear-compartment climate control has been switched on (⟶ page 285).

In automatic mode, the temperature, airflow and air distribution are regulated and kept constant.

- Press the REAR button.
- Press the AUTO button.

ⓘ Even if the front-compartment system is in automatic mode, the rear-compartment system can exit automatic mode if you adjust the blower on the rear-compartment menu.

ⓘ If the air is cooled and the driver's, front passenger or sliding door is opened, the rear air conditioning system blower will be turned down after around 15 minutes.
When all doors have been closed again, the blower will be reset to the previous setting after around one minute.

Information on the air distribution settings

The symbols on the display indicate the vents through which the air is being directed.

TEMPMATIC

- Demister and centre air vents
- All vents
- Centre vents
- Centre and footwell vents

THERMOTRONIC

- Demister vents
- Demister and centre air vents
- All vents
- Demister and footwell vents
- Centre vents
- Centre and footwell vents
- Footwell vents

Setting the air distribution

Requirements:

- The climate control system is switched on.

- Press the button repeatedly until the required air distribution appears in the display of the air conditioning system.

Switching the synchronisation function on/off

Requirements:

- The climate control system has been switched on (⟶ page 285).

The synchronisation function controls the climate control function centrally. The settings for the temperature and airflow in the front zone will automatically be adopted for the rear zone.

► Press the SYNC button.

ⓘ If the rear-compartment climate control has been switched off, you can switch it on automatically by pressing the SYNC button.

Demisting the windows

WINDOWS MISTED UP ON THE INSIDE
Vehicles with heating system

► Press the MAX button.
When windscreen demisting is switched on, the temperature and airflow cannot be adjusted.

► Close the front air vents (→ page 290).

Vehicles with TEMPMATIC or THERMOTRONIC

► Press the A/C button and, if necessary, use the button to direct air onto the windscreen .

► Increase the airflow as necessary and close the front air vents (→ page 290).

► If the windows remain misted up: press the MAX button.
When windscreen demisting is switched on, the temperature and airflow cannot be adjusted.

MAX will appear on the climate control system display.

► **Vehicles with a windscreen heater:** press the button.

DEPENDING ON OPERATION, YOU CAN ACHIEVE FASTER DEMISTING AND DRYING OF THE WINDSCREEN WITH THE FOLLOWING SETTINGS:

- Use the button to direct air onto the windscreen .
- Set the temperature ▼▲ and the airflow to maximum using the rocker switches.
- Close the front air vents (→ page 290).
- Vehicles with windscreen heater: switch on the windscreen heater (→ page 289).
- Switch off the rear-compartment climate control REAR (→ page 285).
- For vehicles with heating systems: set the air distribution so that the and MAX LEDs are off (→ page 282).

WINDOWS MISTED UP ON THE OUTSIDE

► Switch on the windscreen wipers (→ page 273).

Switching air-recirculation mode on/off

► Press the button.
The interior air will be recirculated.

Air-recirculation mode will switch off automatically.

ⓘ When air-recirculation mode is switched on, the windows may mist up more quickly. Switch on air-recirculation mode only briefly.

AIR-RECIRCULATION MODE WILL AUTOMATICALLY SWITCH ON IN THE FOLLOWING CASES:

- in high outside temperatures
- while the vehicle is driving through a tunnel (vehicles with THERMOTRONIC automatic climate control and navigation only)
- when the wiping with washer fluid function is switched on (→ page 273)

The indicator lamp on the button will not light up in this case. After a maximum of 30 minutes, outside air will automatically be introduced again.

Convenience opening/closing via the air recirculation button

► **Convenience closing:** press the button until the side windows begin to close automatically.

The initial position of the side windows is saved.

► **Convenience opening:** press the button until the side windows begin to open automatically.

The side windows open automatically until they have reached their previously saved position.

Switching the windscreen heater on and off

ⓘ In the event of high outside temperatures, the windscreen heater may not switch on.

► Press the button.

If the indicator lamp on the button lights up, the windscreen heater has switched on.

ⓘ The windscreen heater switches off automatically after a few minutes.

ⓘ If the battery voltage is too low, it may not be possible to switch the windscreen heater on. If the battery voltage becomes too low while the windscreen heater is in operation, the windscreen heater will switch off automatically.

Switching the rear window heater on or off

► Press the REAR button.

If the indicator lamp lights up, the rear window heater is switched on.

Operating air vents

Adjusting the front air vents

WARNING
Risk of burns or frostbite due to being too close to the air vents

Very hot or very cold air can flow from the air vents.

- Make sure that all vehicle occupants always maintain a sufficient distance from the air vents.
- If necessary, direct the airflow to another area of the vehicle interior.

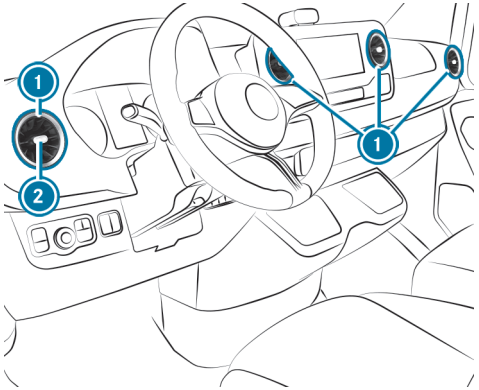

- **To open or close:** hold the centre (2) of the air vent (1) and turn it to the left or right as far as it will go.
- **To set the airflow direction:** hold the centre (2) of the air vent (1) and move it up, down, left or right.

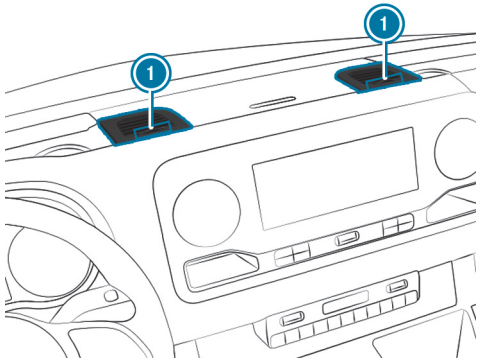

- **To open or close:** turn the adjustment wheels (1) on the high-power air vents to the left or right as far as they will go.

Cooled air will flow out of the high-power air vents. Heating will not be possible. Only open the high-power air vents in summer during cooling mode and keep them closed in winter.

Adjusting air vents in the roof air duct

In vehicles with a rear air conditioning system, adjustable air vents have been integrated in the roof air duct.

- **To adjust the airflow:** if necessary, open or close the air flaps in air vents (1).
- **To adjust the air distribution:** turn air vents (1) to the required position.

Information about air vents in the rear

WARNING
Risk of burns or frostbite due to being too close to the air vents

Very hot or very cold air can flow from the air vents.

- Make sure that all vehicle occupants always maintain a sufficient distance from the air vents.
- If necessary, direct the airflow to another area of the vehicle interior.

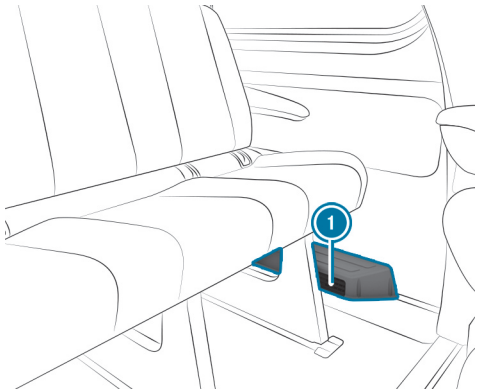

Depending on the vehicle equipment, there will be an air duct or a heater with additional air vents in the rear footwell on the left-hand side (1). Do not place any objects here. Vehicle occupants must maintain a sufficient distance due to the warm air flow and air intake.

Auxiliary heating

Notes on auxiliary heating

DANGER
Risk of fatal injury due to poisonous exhaust gases

If the tailpipe is blocked or sufficient ventilation is not possible, poisonous exhaust gases such as carbon monoxide may enter the vehicle. This is the case in enclosed spaces or if the vehicle gets stuck in snow, for example.

- Always switch the stationary heater off in enclosed spaces without an air extraction system, e.g. in garages.
- Keep the tailpipe and the area around the vehicle free from snow when the engine or the stationary heater is running.
- Open a window on the side of the vehicle facing away from the wind to ensure an adequate supply of fresh air.

WARNING
Risk of fire due to hot stationary heater components and exhaust gases

Flammable materials such as leaves, grass or twigs may ignite.

- When the stationary heater is switched on, make sure that:
  - hot vehicle parts do not come into contact with flammable materials.
  - the exhaust gas can flow out of the stationary heater exhaust pipe unhindered.
  - the exhaust gas does not come into contact with flammable materials.

NOTE
Damage to the auxiliary heating

If the auxiliary heating is not used for an extended period of time, it can be damaged.

- Switch the auxiliary heating on for around ten minutes at least once a month.

NOTE
Damage to the auxiliary heating due to overheating

If the flow of hot air is blocked, the auxiliary heating may overheat and switch off.

► Do not block the flow of hot air.

ⓘ **Vehicles with a modified fuel display:** if an externally operated consumer is connected via the cable for the auxiliary heating, this will not be taken into consideration on the "remaining range" display of the on-board computer.
In this case, pay attention to the fuel display. The fuel display reflects the actual fill level.

If you are transporting hazardous materials, comply with the relevant safety regulations. Place objects a sufficient distance from the auxiliary heating outlet opening.

Auxiliary heating heats the air inside the vehicle to the set temperature.

Hot-water auxiliary heater

FUNCTIONS OF THE HOT-WATER AUXILIARY HEATER
The hot water auxiliary heater supplements your vehicle's climate control system and has auxiliary heating, stationary heater and stationary ventilation operating modes.

AUXILIARY HEATING OPERATION
Auxiliary heating operation is possible only when the engine is running and heats the coolant in the entire engine's coolant circuit in addition to the engine heat. This results in faster heating of the vehicle cabin when you drive at low outside temperatures.

STATIONARY HEATER OPERATION

ⓘ If the fuel level is well above the reserve, it is also possible to operate the stationary heater when the vehicle is on an incline at a low angle.

The stationary heater heats the coolant when the vehicle is switched off and thus independently of engine operation. In vehicles with the OM654 engine, the coolant is heated separately from the engine circuit. This results in faster heating of the passenger compartment.

The operating duration depends on the state of charge of the starter battery and is limited to a maximum of 50 minutes.

If the engine is started while the stationary heater is running, the vehicle will automatically switch to auxiliary heating mode and the operating duration will correspond to that of engine operation.

STATIONARY VENTILATION OPERATION
With the ventilation function of the stationary heater, fresh air from the outside is fed into the vehicle interior. However, the air drawn in is not actively cooled, which is why the air temperature of the vehicle interior will not drop below that of the outside temperature. Stationary ventilation will not be active when the engine is running.

The operating modes that do not use the engine (stationary heater, stationary ventilation) use the starter battery. Therefore, drive a reasonably long distance after heating or ventilating the vehicle twice in succession at most.

SWITCHING THE HOT-WATER AUXILIARY HEATER ON/OFF WITH THE BUTTON

DANGER
Risk of fatal injury due to poisonous exhaust gases

If the tailpipe is blocked or sufficient ventilation is not possible, poisonous exhaust gases such as carbon monoxide may enter the vehicle. This is the case in enclosed spaces or if the vehicle gets stuck in snow, for example.

- Always switch the stationary heater off in enclosed spaces without an air extraction system, e.g. in garages.
- Keep the tailpipe and the area around the vehicle free from snow when the engine or the stationary heater is running.
- Open a window on the side of the vehicle facing away from the wind to ensure an adequate supply of fresh air.

WARNING
Risk of fire due to hot stationary heater components and exhaust gases

Flammable materials such as leaves, grass or twigs may ignite.

- When the stationary heater is switched on, make sure that:
  - hot vehicle parts do not come into contact with flammable materials.
  - the exhaust gas can flow out of the stationary heater exhaust pipe unhindered.
  - the exhaust gas does not come into contact with flammable materials.

NOTE
Battery discharge caused by stationary heater or stationary ventilation operation

Operating the stationary heater or stationary ventilation drains the battery.

- After heating or ventilating the vehicle twice, drive for a longer period of time.

WHEN THE VEHICLE IS STARTED

- **To switch heater booster mode on and off:** press the button.
- **To set the desired temperature:** set the temperature using the ▼▲ button.

COLOURS OF THE INDICATOR LAMP:

- **Blue:** stationary ventilation has been switched on.
- **Red:** the stationary heater has been switched on.
- **Yellow:** a departure time has been preselected.

WHEN THE VEHICLE IS NOT STARTED

The stationary heater or stationary ventilation will switch off after a maximum of 50 minutes.

- **To switch the stationary heater/stationary ventilation on and off:** press the button.

ADJUSTING THE HOT-WATER AUXILIARY HEATER BY REMOTE CONTROL

DANGER
Risk of fatal injury due to poisonous exhaust gases

If the tailpipe is blocked or sufficient ventilation is not possible, poisonous exhaust gases such as carbon monoxide may enter the vehicle. This is the case in enclosed spaces or if the vehicle gets stuck in snow, for example.

- ► Always switch the stationary heater off in enclosed spaces without an air extraction system, e.g. in garages.
- ► Keep the tailpipe and the area around the vehicle free from snow when the engine or the stationary heater is running.
- ► Open a window on the side of the vehicle facing away from the wind to ensure an adequate supply of fresh air.

WARNING
Risk of fire due to hot stationary heater components and exhaust gases

Flammable materials such as leaves, grass or twigs may ignite.

- ► When the stationary heater is switched on, make sure that:
  - hot vehicle parts do not come into contact with flammable materials.
  - the exhaust gas can flow out of the stationary heater exhaust pipe unhindered.
  - the exhaust gas does not come into contact with flammable materials.

NOTE
Battery discharge caused by stationary heater or stationary ventilation operation

Operating the stationary heater or stationary ventilation drains the battery.

- ► After heating or ventilating the vehicle twice, drive for a longer period of time.

Requirements:

- The fuel tank is filled above the reserve level.

SWITCHING ON IMMEDIATELY

- ► Press and hold the ON button until the "ON" message appears on the remote control's display.

SETTING THE DEPARTURE TIME

- ► Briefly press the ON button.

- Continue to press the ◁ or ▷ button until the time to be changed appears on the display.
- Press the ON and OFF buttons simultaneously.
  The ⏲ symbol on the remote control display will flash.
- Set the required departure time with the ◁ and ▷ buttons.
- Press the ON and OFF buttons simultaneously.
  The new departure time will be saved.

Up to three departure times can be saved.

ACTIVATING THE DEPARTURE TIME

- Briefly press the ON button.
- Select the required departure time with the ◁ and ▷ buttons.
- Press and hold the ON button.
  The ⏰ symbol, the departure time and, depending on the selected departure time, the letter **A**, **B** or **C** will appear on the remote control's display.

DEACTIVATING THE DEPARTURE TIME

- Select the desired departure time and press and hold the OFF button.
  "OFF" will appear on the display.

CHECKING THE STATUS OF THE ACTIVE STATIONARY HEATER

- Briefly press the ON button.

SWITCHING OFF IMMEDIATELY

- Press and hold the OFF button.

OVERVIEW OF REMOTE CONTROL DISPLAYS (STATIONARY HEATING/VENTILATION)

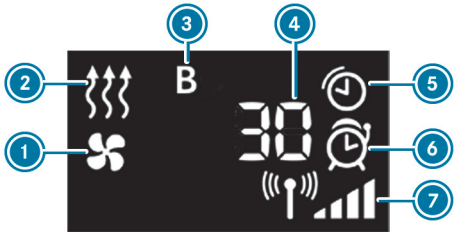

1. Stationary ventilation switched on
2. Stationary heating switched on
3. Selected departure time
4. Remaining stationary heating or ventilation time (in minutes)
5. Stationary heating or ventilation active
6. Departure time activated
7. Signal strength

FURTHER DISPLAY OPTIONS:

- **Time:** the selected departure time.
- **0 minutes:** the running time of the stationary heating will extend, because the operating temperature has not yet been reached when the engine is started.
- **OFF:** stationary heating or ventilation has been switched off.

CHANGING THE REMOTE CONTROL'S BATTERY (STATIONARY HEATER)

DANGER
Risk of death due to swallowing batteries

Batteries contain toxic and corrosive substances. If batteries are swallowed or otherwise enter the body, severe internal burns may occur within two hours.

There is a risk of fatal injury!

- Keep batteries out of the reach of children.
- If the battery cover does not close securely, do not use the remote control any longer and keep out of the reach of children.
- If batteries are swallowed or otherwise enter the body, seek medical attention immediately.

ENVIRONMENTAL NOTE
Environmental damage due to improper disposal of batteries

Batteries contain toxic and corrosive substances.

- Take discharged batteries to a qualified specialist workshop or to a collection point for used batteries.

Requirements:

- A CR2450 lithium battery is available.

Mercedes-Benz recommends that you have the battery changed at a qualified specialist workshop.

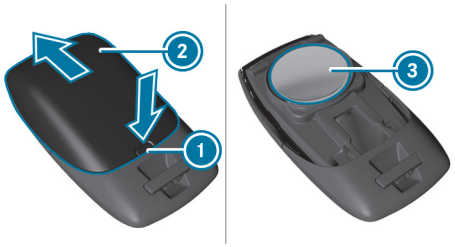

- Push a pointed object into recess 1.
- Slide battery cover 2 backwards in the direction of the arrow.
- Insert new battery 3 with the lettering facing upwards.
- Slide battery cover 2 onto the remote control in the opposite direction to the arrow until the battery cover engages.

SETTING THE HOT-WATER AUXILIARY HEATER USING THE ON-BOARD COMPUTER

DANGER
Risk of fatal injury due to poisonous exhaust gases

If the tailpipe is blocked or sufficient ventilation is not possible, poisonous exhaust gases such as carbon monoxide may enter the vehicle. This is the case in enclosed spaces or if the vehicle gets stuck in snow, for example.

- Always switch the stationary heater off in enclosed spaces without an air extraction system, e.g. in garages.
- Keep the tailpipe and the area around the vehicle free from snow when the engine or the stationary heater is running.
- Open a window on the side of the vehicle facing away from the wind to ensure an adequate supply of fresh air.

WARNING
Risk of fire due to hot stationary heater components and exhaust gases

Flammable materials such as leaves, grass or twigs may ignite.

- When the stationary heater is switched on, make sure that:
  - hot vehicle parts do not come into contact with flammable materials.
  - the exhaust gas can flow out of the stationary heater exhaust pipe unhindered.
  - the exhaust gas does not come into contact with flammable materials.

NOTE
Battery discharge caused by stationary heater or stationary ventilation operation

Operating the stationary heater or stationary ventilation drains the battery.

- After heating or ventilating the vehicle twice, drive for a longer period of time.

Requirements

- The fuel tank is filled above the reserve level.
- The vehicle is switched on.

On-board computer:
Settings ▶▶ Heating

SETTING THE SWITCH-ON TIME

- Select Settings.
- Select the desired departure time.

ACTIVATING THE DEPARTURE TIME

- Activate the departure time by ticking the box.

ⓘ Ensure that A, B and C each correspond to a programmed departure time.

ⓘ The programmed time will remain active only until the next time the vehicle is started.

SELECTING A PROGRAMMED TIME

► Set the required programmed time – A, B or C.

ⓘ The required programmed time – A, B or C – will appear only if the box to activate the departure time is ticked.

► Select the required programmed time by swiping left or right, e.g. A, B or C.

RECTIFYING PROBLEMS WITH THE HOT-WATER AUXILIARY HEATER

FAIL APPEARS ON THE REMOTE CONTROL DISPLAY

POSSIBLE CAUSE:

- Signal transmission between transmitter and receiver is malfunctioning.

► Change your position in relation to the vehicle, moving closer if necessary.

FAIL APPEARS ON THE REMOTE CONTROL DISPLAY

POSSIBLE CAUSE:

- The starter battery is not sufficiently charged.

► Charge the starter battery.

POSSIBLE CAUSE:

- The fuel tank is not filled up to the reserve level.

► Refuel at the nearest filling station.

FAIL APPEARS ON THE REMOTE CONTROL DISPLAY

POSSIBLE CAUSE:

- The stationary heater has malfunctioned.

► Have the stationary heater checked at a qualified specialist workshop.

Auxiliary warm-air heater

SWITCH CLOCK OVERVIEW

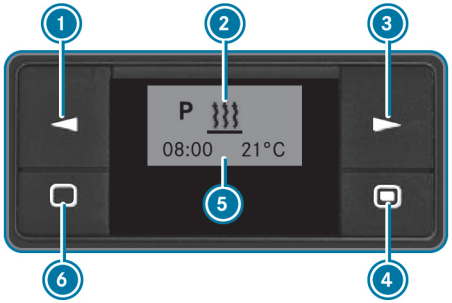

1. Select option/change values
2. Menu bar
3. Select option
4. Press briefly: confirm selection or setting/press and hold: switch on immediate heating mode
5. Status line
6. Press briefly: switch on the switch clock/cancel settings in a menu/hold pressed: cancel all active functions

SETTING THE TIMER

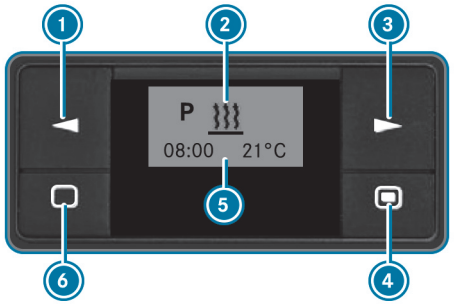

► Press the 6 button.

ⓘ The switch clock will switch to standby mode after ten seconds. The display will go off.

SETTING THE TIMER

SETTING THE TIME

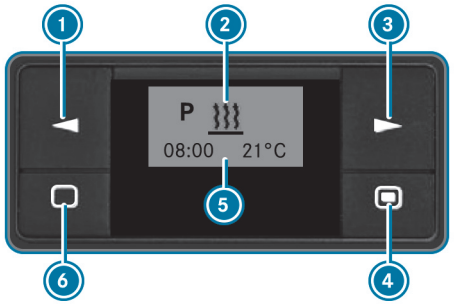

YOU MUST RESET THE DAY, TIME AND DEFAULT VALUE FOR THE OPERATING DURATION IN THE FOLLOWING CASES:

- initial operation
- after a voltage supply interruption (e.g.if the battery has been disconnected)
- after a malfunction

► Press button 1 or 3 until flashes on the menu bar 2.

► Press the 4 button.

► Press button 1 or 3 until flashes.

► Press the 4 button.

► Set the hour with button 1 or 3.

► Press the 4 button.

► Set the minutes with button 1 or 3.

► Press the 4 button.

SETTING THE TIME FORMAT

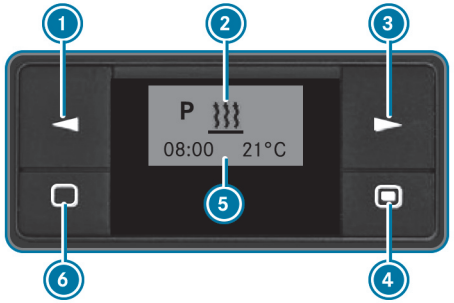

- Press button 1 or 3 until flashes on the menu bar 2.
- Press the 4 button.
- Press button 1 or 3 until the symbol for the time format flashes.
- Press the 4 button.
- Select the desired time format using button 1 or 3.
- Press the 4 button.

SETTING THE DAY

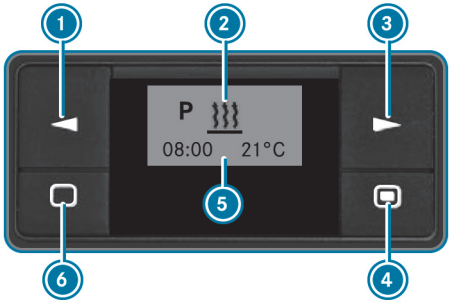

- Press button 1 or 3 until flashes on the menu bar 2.
- Press the 4 button.
- Press the 1 or 3 button until the symbol for the day flashes.
- Press the 4 button.
- Use the 1 or 3 button to select the required day of the week.
- Press the 4 button.

SWITCHING IMMEDIATE HEATING MODE ON/OFF

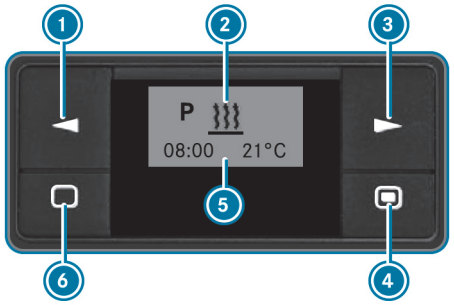

- **To switch on:** press the button 4 until flashes on the menu bar 2.

  On will briefly appear on the display, followed by the remaining operating duration or the symbol for continuous operation.

- **To switch on:** press the button 6 until Off appears on the display.

SETTING THE DEPARTURE TIME

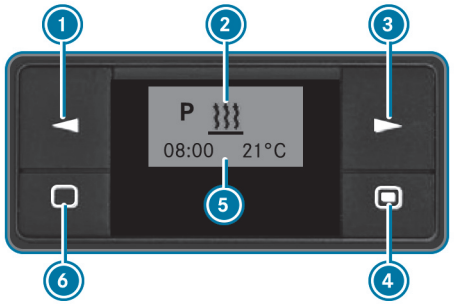

You can set three departure times with the switch clock. Following malfunctions or if the battery has been disconnected, you will need to re-set the departure times.

- **To set the departure time:** press the 1 or 3 button until P flashes on the 2 menu row.
- Press the 4 button.

  The numbers of the program memories are shown in the program column 5. The tick denotes activated program memories.
- Use the 1 or 3 button to select the required program memory.
- Press the 4 button.
- **To activate/deactivate program memories:** use the 1 or 3 button to select On or Off.
- Press button 4.
- **To edit the program memory:** use the 1 or 3 button to select .
- Press the 4 button.
- Set the day of the week and the time (→ page 300).

SETTING THE TEMPERATURE AND OPERATING DURATION

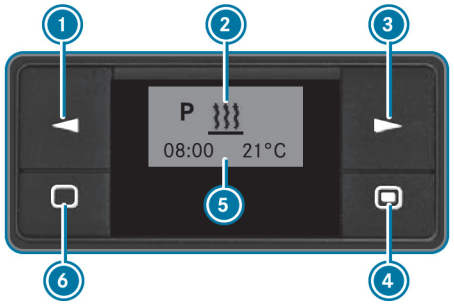

- Press the 4 button.
- Set the temperature with button 1 or 3.
- Press the 4 button.
- Set the operating duration with button 1 or 3 or select the ∞ symbol for continuous operation.
- Press the 4 button.

ⓘ The operating duration set is the default setting for immediate heating mode. You can set the operating duration within a range of 10 to 120 minutes or to continuous operation.

RESOLVING PROBLEMS WITH THE AUXILIARY WARM-AIR HEATER

THE MESSAGE ERROR APPEARS ON THE SWITCH CLOCK'S DISPLAY.

POSSIBLE CAUSE:

- A malfunction has occurred.

- Have the auxiliary heating checked at a qualified specialist workshop.

THE MESSAGE INIT APPEARS ON THE SWITCH CLOCK'S DISPLAY.

POSSIBLE CAUSE:

- The power supply has been interrupted. All saved settings have been deleted.
  Automatic hardware detection is currently active.

- When automatic hardware detection is complete, set the day of the week, time and operating duration (→ page 300).
- Set the departure time (→ page 302).

AUXILIARY HEATING AUTOMATICALLY SWITCHES OFF AND/OR CANNOT BE SWITCHED ON.

POSSIBLE CAUSE:

- The undervoltage protection system integrated in the control unit is switching auxiliary heating off as the on-board electrical system voltage is below 10 V.

- Have the alternator and the battery checked.

POSSIBLE CAUSE:

- The electrical fuse has blown.

- Replace the electrical fuse; see "Fuse assignment" supplement.
- Have the cause of the faulty fuse investigated at a qualified specialist workshop.

THE AUXILIARY WARM-AIR HEATER HAS OVERHEATED

POSSIBLE CAUSE:

- The air ducts are clogged.

- Ensure that the flow of hot air is not blocked.
- Have the auxiliary heating checked at a qualified specialist workshop.

Operating load compartment ventilation

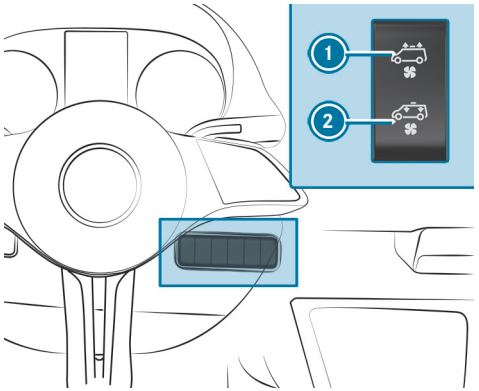

If your vehicle is equipped with a roof ventilator, you can admit fresh air to the load compartment or extract air from it as well.

- Switch on the vehicle.
- **To switch on and extract:** press the top section of switch 1.
  The roof ventilator will remove used air from the load compartment.
- **To switch on and admit fresh air:** press the bottom section of switch 2.
  The roof ventilator will feed fresh air into the load compartment.
- **To switch off:** place the switch in the centre position.

Back to Contents

Driving and parking

This interactive PDF works like a website – tap or click a button to jump straight to where you want to go.
You can return here at any time via the navigation bar at the top left.

Driving
Battery main switch
Manual transmission
Automatic transmission
All-wheel drive
Electronic level control
Refuelling
Parking
Driving and driving safety systems
Work mode
Trailer operation

Driving

Switching on the power supply or vehicle with the start/stop button

WARNING
Accident– and risk of injury with unsupervised children in the vehicle

IF YOU LEAVE CHILDREN UNATTENDED IN THE VEHICLE, THEY CAN IN PARTICULAR

- Open doors and thereby endanger other persons or road users.
- get out of the car and are hit by traffic.
- Operate vehicle equipment and become trapped, forexample.

IN ADDITION, THE CHILDREN COULD ALSO SET THE VEHICLE IN MOTION, FOR EXAMPLEBY:

- releasing the parking brake.
- change the gearbox setting.
- start the vehicle.

► Never leave children unattended in the vehicle.

► When leaving the vehicle, always take the SmartKey with you and lock the vehicle.

► Keep the key out of reach of children.

WARNING
Risk of accident and injury due to animals left unsecured or unattended in the vehicle

If you leave animals in the vehicle unattended or unsecured, they could press buttons or switches, for instance.

AN ANIMAL MAY:

- activate vehicle equipment and become trapped, for example
- switch systems on or off and endanger other road users

Unsecured animals may be thrown about the vehicle in the event of an accident, or sudden steering and braking manoeuvres, and injure vehicle occupants.

► Never leave animals unattended in the vehicle.

► Always correctly secure animals while driving, e.g. using a suitable animal carrier.

Requirements:

- The key is in the detection range of the aerial (⟶ page 172) and the key battery is not flat.

- In addition, the following applies to vehicles with a reduced detection range: the key is located in the key holder provided in the driver's cup holder (⟶ page 239).
- The brake pedal is not depressed.

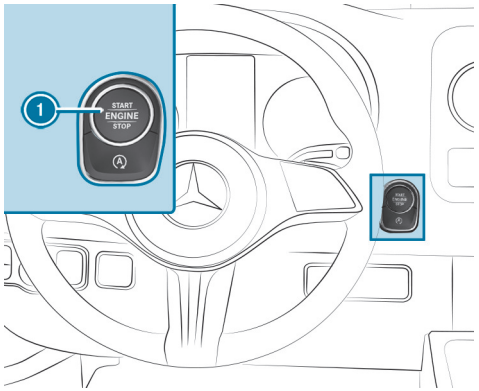

► **To switch on the power supply:** press button 1 once.

You can, for example, activate the windscreen wipers.

THE POWER SUPPLY WILL BE SWITCHED OFF AGAIN WHEN ONE OF THE FOLLOWING CONDITIONS IS MET:

- You open the driver's door.
- You press button 1 twice.

► **To switch on the vehicle:** press button 1 twice.

The indicator and warning lamps will light up on the instrument cluster.

THE VEHICLE WILL BE SWITCHED OFF AGAIN IF ANY OF THE FOLLOWING CONDITIONS IS MET:

- You do not start the vehicle within 15 minutes.
- You press button 1 once.

Starting the engine

STARTING THE VEHICLE WITH THE START/STOP BUTTON

WARNING
Accident– and risk of injury with unsupervised children in the vehicle

IF YOU LEAVE CHILDREN UNATTENDED IN THE VEHICLE, THEY CAN IN PARTICULAR

- Open doors and thereby endanger other persons or road users.
- get out of the car and are hit by traffic.
- Operate vehicle equipment and become trapped, forexample.

IN ADDITION, THE CHILDREN COULD ALSO SET THE VEHICLE IN MOTION, FOR EXAMPLEBY:

- releasing the parking brake.
- change the gearbox setting.
- start the vehicle.

► Never leave children unattended in the vehicle.

► When leaving the vehicle, always take the SmartKey with you and lock the vehicle.

► Keep the key out of reach of children.

WARNING
Risk of accident and injury due to animals left unsecured or unattended in the vehicle

If you leave animals in the vehicle unattended or unsecured, they could press buttons or switches, for instance.

AN ANIMAL MAY:

- activate vehicle equipment and become trapped, for example
- switch systems on or off and endanger other road users

Unsecured animals may be thrown about the vehicle in the event of an accident, or sudden steering and braking manoeuvres, and injure vehicle occupants.

► Never leave animals unattended in the vehicle.

► Always correctly secure animals while driving, e.g. using a suitable animal carrier.

DANGER
Danger to life from toxic exhaust gas in enclosed spaces

Combustion engines emit toxic exhaust gases suchas carbon monoxide. Inhaling these exhaust gases is hazardous to health and leads to poisoning.

► Never leave the engine or, if present, the stationary heater running in an enclosed space without sufficient ventilation.

WARNING
Risk of fire due to flammable materials in the engine compartment or on the exhaust system

Flammable materials may ignite.

- Therefore, regularly check that there are no flammable foreign materials in the engine compartment or on the exhaust system.

Requirements

- The key is in the detection range of the aerial (→ page 172) and the key battery is not flat.
- In addition, the following applies to vehicles with a reduced detection range: the key is located in the key holder provided in the driver's cup holder (→ page 239).
- Vehicles with automatic transmission: the transmission is in position P or N.
- Vehicles with manual transmission: the clutch pedal is depressed.

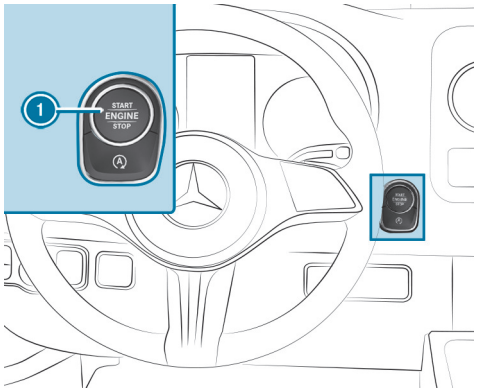

- Depress the brake pedal and press button 1 once.
- If the vehicle does not start, switch off any unnecessary consumers and press button 1 once.
- If the vehicle still does not start and a display message reading Place the key in the marked space See Owner's Manual appears on the instrument cluster, start the vehicle in emergency operation mode (→ page 311).

STARTING THE VEHICLE IN EMERGENCY OPERATION MODE

WARNING
Accident– and risk of injury with unsupervised children in the vehicle

IF YOU LEAVE CHILDREN UNATTENDED IN THE VEHICLE, THEY CAN IN PARTICULAR

- Open doors and thereby endanger other persons or road users.
- get out of the car and are hit by traffic.
- Operate vehicle equipment and become trapped, forexample.

IN ADDITION, THE CHILDREN COULD ALSO SET THE VEHICLE IN MOTION, FOR EXAMPLEBY:

- releasing the parking brake.
- change the gearbox setting.
- start the vehicle.

► Never leave children unattended in the vehicle.

► When leaving the vehicle, always take the SmartKey with you and lock the vehicle.

► Keep the key out of reach of children.

DANGER
Danger to life from toxic exhaust gas in enclosed spaces

Combustion engines emit toxic exhaust gases suchas carbon monoxide. Inhaling these exhaust gases is hazardous to health and leads to poisoning.

► Never leave the engine or, if present, the stationary heater running in an enclosed space without sufficient ventilation.

WARNING
Risk of fire due to flammable materials in the engine compartment or on the exhaust system

Flammable materials may ignite.

► Therefore, regularly check that there are no flammable foreign materials in the engine compartment or on the exhaust system.

If the vehicle does not start and a display message reading Place the key in the marked space See Owner's Manual appears on the instrument cluster, you can start the vehicle in emergency operation mode.

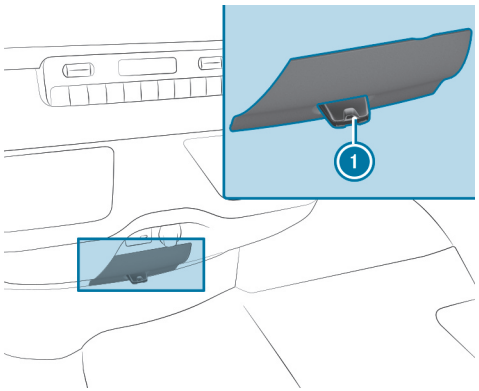

- Remove key 1 from your key ring.
- Insert the key 1 into the slot.
  The vehicle will start after a short time.

If you remove the key from the slot, it will still be possible to drive the vehicle. For any further engine starts to be carried out, however, the key must be located in the slot throughout the journey.

- Have the key 1 checked at a qualified specialist workshop.

IF THE VEHICLE DOES NOT START:

- Leave the key 1 in the slot.
- **Vehicles with manual transmissions:** depress the clutch pedal.
- **Vehicles with automatic transmissions:** depress the brake pedal.
- Start the vehicle with the start/stop button.

ⓘ You can also switch on the power supply or the vehicle with the start/stop button.

Note any information on the display messages that may be shown on the instrument cluster.

Running-in notes

PROTECT THE ENGINE DURING THE FIRST 1500 KM BY:

- Driving at varying road and engine speeds.
- Shifting to the next higher gear at the very latest when the needle reaches the last third before the red area in the rev counter.
- Avoiding stress on the vehicle such as driving at full throttle.
- Not shifting down to a lower gear to brake the vehicle.
- Gradually increasing the engine speed and accelerating the vehicle up to full speed after 1500 km.
- **Vehicles with automatic transmission:** not depressing the accelerator pedal beyond the pressure point (kickdown).

This also applies if the engine or parts of the drivetrain have been replaced.

ALSO OBSERVE THE FOLLOWING BREAKING-IN NOTES:

- After the vehicle has been delivered or after repairs, the sensor system of some driving systems and driving safety systems adjusts itself automatically after the vehicle has been driven a certain distance. Full system effectiveness is not reached until the end of this teach-in process.
- New or replaced brake pads, brake discs and tyres only provide optimal braking and grip after several hundred kilometres. Until then, compen-

sate for the reduced braking effect by depressing the brake pedal with greater force.

Driving tips

NOTES ON DRIVING

DANGER
Danger to life from toxic exhaust gas in enclosed spaces

Combustion engines emit toxic exhaust gases suchas carbon monoxide. Inhaling these exhaust gases is hazardous to health and leads to poisoning.

- Never leave the engine or, if present, the stationary heater running in an enclosed space without sufficient ventilation.

WARNING
Risk of skidding and of an accident due to shifting down on slippery road surfaces

If you shift down on slippery road surfaces to increase the engine braking effect, the drive wheels may lose traction.

- Do not shift down on slippery road surfaces to increase the engine braking effect.

DANGER
Risk of fatal injury from toxic exhaust gases if the tailpipe is blocked

Combustion engines emit toxic exhaust gases such as carbon monoxide. Inhaling these exhaust gases is harmful to health and leads to poisoning. If the tailpipe is blocked or sufficient ventilation is not possible, exhaust gases can enter the vehicle. This is the case, for example, if the vehicle gets stuck in the snow.

- When the engine or stationary heater is running, keep the tailpipe and the area around the vehicle free of snow.
- To ensure a sufficient supply of fresh air, open a window on the side of the vehicle facing away from the wind.

WARNING
Risk of accident due to objects in the driver's footwell

Objects in the driver's footwell may restrict the pedal travel or block a depressed pedal.

This jeopardises the operating- and road safety of the vehicle.

- Safely stow all objects in the vehicle so that they cannot enter the driver's footwell.
- Always ensure sufficient clearance for the pedals.
- Ensure that floor mats and carpets are securely attached.
- Do not place several floor mats or carpets on top of one another.

WARNING
Risk of accident due to incorrect footwear

INCORRECT FOOTWEAR INCLUDES, FOR EXAMPLE:

- shoes with platform soles
- shoes with high heels
- slippers

There is a risk of an accident.

► Always wear suitable footwear so that you can operate the pedals safely.

WARNING
Risk of accident when vehicle is switched off due to steering wheel locking

If you switch off the vehicle while it is stationary, you can no longer steer the vehicle.

► Before the vehicle begins to roll, switch on the vehicle to deactivate steering wheel locking.

WARNING
Risk of accident if the vehicle is switched off while driving

If you switch off the vehicle while driving, safety functions are restricted or no longer available.

This may affect the power steering system and the brake force boosting, for example.

You will need to use considerably more force to steer and brake, for example.

► Do not switch off the vehicle while driving.

WARNING
Risk of accident due to overheated brake system

If you rest your foot on the brake pedal during while driving, the brake system may overheat.

This increases the braking distance and the brake system may even fail.

► Never use the brake pedal as a footrest.

► Do not press the brake pedal and accelerator pedal simultaneously while driving.

On long and steep downhill gradients, you must shift down to a lower gear in good time. This is particularly important when driving a laden vehicle. You are thus making full use of the engine's braking effect. This will take some of the strain off the brake system and prevent the brakes from overheating and wearing too quickly.

NOTE
Causing wear to the brake linings by permanently depressing the brake pedal

- Do not permanently depress the brake pedal while driving.
- To use braking effect of the engine, shift to a lower gear in good time.

NOTE
Damage to the drivetrain and engine when pulling away

- Do not warm up the engine while the vehicle is stationary. Pull away immediately.
- Avoid high engine speeds and driving at full throttle until the engine has reached its operating temperature.

NOTE
Vehicle damage due to failure to observe the maximum permissible clearance height

If the vehicle height exceeds the maximum permissible clearance height, the roof and other vehicle parts may be damaged.

- Please observe the indicated maximum clearance height.
- If the vehicle exceeds the permissible clearance height, do not drive in.
- Take the modified vehicle height in the case of roof superstructures or other carrier systems into account.

Please bear in mind that all the speeds indicated in these Operating Instructions are approximate and are subject to a certain tolerance.

NOTES ON SHORT-DISTANCE TRIPS
If the vehicle is predominantly used for short-distance driving, fuel may accumulate in the engine oil and cause engine damage.

VEHICLES WITH A WARNING MESSAGE (DURING SHORT-DISTANCE TRIPS)
If one of the following displays appears, drive at an engine speed of at least 2000 rpm at the earliest possible opportunity until the indicator lamp or the display message on the display disappears:

- The indicator lamp for the diesel particulate filter in the instrument cluster lights up.
  Observe the notes on regeneration (→ page 327).
- The message Diesel particulate filter Drive at high engine speeds See Owner's Manual appears in the instrument cluster.

On vehicles with automatic transmission, shift to a lower gear (→ page 339).

Switch the ECO start/stop function off in vehicles with this function.

The diesel particulate filter's burn-off process is assisted by the intentional temperature increase.

If the indicator lamp or the display message does not go out after approximately 40 minutes, contact a qualified specialist workshop immediately.

VEHICLES WITHOUT A WARNING MESSAGE (DURING SHORT-DISTANCE TRIPS)

If you mainly drive short distances, you should drive on a motorway or country road for 20 minutes every 500 km. This facilitates the regeneration of the diesel particulate filter.

NOTES ON THE SPEED LIMITATION

> ⚠ **WARNING**
> Risk of injury through exceeding the specified tyre load-bearing capacity or the permissible speed rating
>
> Exceeding the load-bearing capacity of the tyres can lead to tyre damage and could cause the tyres to explode.
>
> ▶ Therefore, only use tyre types and sizes approved for your vehicle model.
>
> ▶ Observe the tyre load-bearing capacity rating and speed rating required for your vehicle.

Find out about the maximum permissible speed resulting from the tyres, i.e. tyres and tyre pressure. Please observe the legal requirements for tyres for the country you are in.

> ⓘ **Vehicles with tachograph:** due to the different certification requirements for the tachograph and instrument cluster, the displayed speeds may differ. Please keep to the speed display in the instrument cluster.

You can permanently limit the speed of your vehicle.

Mercedes-Benz recommends a qualified specialist workshop for programming the speed limitation.

On vehicles with a limiter, you can temporarily or permanently limit the speed of your vehicle using the on-board computer (⟶ page 382).

Note that you cannot exceed a programmed speed limitation when overtaking.

On downhill gradients, the speed limitation may be exceeded. Apply the brakes if necessary.

Display messages will warn you that you are approaching the speed limitation.

> ⓘ For bus-equipped vehicles, the ex-works speed limitation for your vehicle is 100 km/h When overtaking, bear in mind that the speed limitation cannot be exceeded.

INFORMATION ABOUT DRIVING ABROAD

SERVICE

An extensive Mercedes-Benz service is also available abroad. Nevertheless, please remember that services or spare parts may not be available immediately. The relevant workshop directories are available from a Mercedes-Benz Service Centre.

FUEL

In some countries, only fuels with a low octane number or increased sulphur content will be available.

Mercedes-Benz recommends installing a fuel filter with a water separator for countries in which diesel has an increased water content.

Unsuitable fuel can cause engine damage. Information about fuel can be found in the "Fuel" section (⟶ page 743).

INFORMATION ABOUT TRANSPORT BY RAIL

Transporting your vehicle by rail may be subject to certain restrictions or require special measures to be taken in some countries due to varying tunnel heights and loading standards.

You can obtain information about this from any Mercedes-Benz Service Centre.

INFORMATION ON BRAKING

WARNING
Risk of skidding and of an accident due to shifting down on slippery road surfaces

If you shift down on slippery road surfaces to increase the engine braking effect, the drive wheels may lose traction.

- Do not shift down on slippery road surfaces to increase the engine braking effect.

WARNING
Risk of accident due to the brake system overheating

If you leave your foot on the brake pedal when driving, the brake system may overheat.

This increases the braking distance and the brake system can even fail.

- Never use the brake pedal as a footrest.
- Do not depress the brake pedal and the accelerator pedal at the same time while driving.

NOTE
Causing wear to the brake linings by permanently depressing the brake pedal

- Do not permanently depress the brake pedal while driving.
- To use braking effect of the engine, shift to a lower gear in good time.

DOWNHILL GRADIENTS

ON LONG AND STEEP DOWNHILL GRADIENTS YOU SHOULD OBSERVE THE FOLLOWING INSTRUCTIONS:

- in vehicles with an automatic transmission, shift down to shift ranges **2** or **1** in good time so that the engine is running in the medium to upper engine speed range (⟶ page 339).
- In vehicles with a manual transmission, shift down to a lower gear in good time so that the engine is running in the medium to upper engine speed range.

Change the shift range in good time when cruise control or the limiter are activated. Observe the driving tips (⟶ page 313).

In this way you make use of the braking effect of the engine to maintain your speed and do not have to brake as often. This relieves the load on the service brake and prevents the brakes from overheating and wearing too quickly.

HEAVY AND LIGHT LOADS

If the brakes have been subjected to heavy use, do not park the vehicle immediately. Keep driving for a short while. The brakes cool down more quickly in the air stream.

If you only make moderate use of the brakes, you should occasionally test their effectiveness. To do this, brake more firmly from a higher speed while paying attention to the traffic conditions. The brakes will grip better as a result.

WET ROAD SURFACES
If you have been driving for a long time in heavy rain without braking, there may be a delayed response when you first apply the brakes. This may also occur after driving through a car wash or deep water. In such cases you will need to depress the brake pedal more firmly. Maintain a greater distance from the vehicle in front.

While paying attention to the traffic conditions, you should brake the vehicle firmly after driving on a wet road surface or through a car wash. This heats the brake discs so that they dry more quickly, thus protecting them against corrosion.

IMPAIRED BRAKING EFFECT ON ROADS TREATED WITH DE-ICING SALT:

- A layer of salt on the brake discs or brake linings can increase braking distances considerably, or braking may only be one-sided.
- Maintain an especially large safety distance from the vehicle in front.

TO REMOVE THE LAYER OF SALT:

- Apply the brakes from time to time, paying attention to traffic conditions.
- Depress the brake pedal gently at the end of a journey and when starting a new journey.

NEW BRAKE DISCS AND BRAKE LININGS
New brake linings and brake discs only reach their optimal braking effect after approximately 100 km.

Until then, compensate for the reduced braking effect by depressing the brake pedal with greater force. For safety reasons, Mercedes-Benz recommends that you only have brake linings and brake discs installed in your vehicle which have been approved by Mercedes-Benz.

Other brake discs or brake linings may compromise the safety of your vehicle.

Always replace all brake discs and brake linings on an axle at the same time. Always fit new brake linings when replacing brake discs.

VEHICLES WITH A MANUAL PARKING BRAKE

WARNING
Risk of skidding or an accident by braking with the parking brake

If you have to brake your vehicle with the parking brake, the braking distance is considerably longer and the wheels may lock. There is an increased risk of skidding and/or accident.

- ► Only brake the vehicle with the parking brake if the service brake has failed.
- ► In this case, do not apply the parking brake with too much force.
- ► If the wheels lock, immediately release the parking brake as much as required for the wheels to turn again.

When driving on wet roads or dirt-covered surfaces, de-icing salt or dirt may get into the parking brake. This causes corrosion and a reduction of brake force.

In order to prevent this, drive with the parking brake lightly applied from time to time.

When doing so, drive for a distance of approximately 100 m at a maximum speed of 20 km/h.

The brake lights do not light up when you brake the vehicle with the parking brake.

INFORMATION ABOUT DRIVING ON WET ROADS

AQUAPLANING

> ⚠ **WARNING**
> Risk of aquaplaning due to low tyre profile
>
> Depending on the level of water on the road, aquaplaning may occur.
>
> ► Adapt your speed to the prevailing conditions.
>
> ► Avoid ruts and brake carefully.
>
> ► Change tyres when the tread is too low.

THEREFORE, IN HEAVY RAIN OR OTHER CONDITIONS IN WHICH AQUAPLANING CAN OCCUR, DRIVE AS FOLLOWS:

- Reduce your speed.
- Avoid tyre ruts.
- Brake carefully.

DRIVING ON FLOODED ROADS

Bear in mind that vehicles travelling in front or in the opposite direction create waves. This may cause the maximum permissible depth of water to be exceeded. These notes must be observed under all circumstances. Otherwise, you could damage the engine, electrics and transmission.

IF YOU HAVE TO DRIVE ON STRETCHES OF ROAD ON WHICH WATER HAS COLLECTED, PLEASE BEAR IN MIND THE FOLLOWING:

- the water level of standing water must not reach above the lower edge of the front bumper.
- you must drive no faster than walking pace.

Observe the notes on fording while off-road for all-wheel drive vehicles (→ page 320).

INFORMATION ABOUT DRIVING IN WINTER

> ⚠ **DANGER**
> Risk of fatal injury from toxic exhaust gases if the tailpipe is blocked
>
> Combustion engines emit toxic exhaust gases such as carbon monoxide. Inhaling these exhaust gases is harmful to health and leads to poisoning. If the tailpipe is blocked or sufficient ventilation is not possible, exhaust gases can enter the vehicle. This is the case, for example, if the vehicle gets stuck in the snow.
>
> ► When the engine or stationary heater is running, keep the tailpipe and the area around the vehicle free of snow.
>
> ► To ensure a sufficient supply of fresh air, open a window on the side of the vehicle facing away from the wind.

> ⚠ **WARNING**
> Risk of skidding and of an accident due to shifting down on slippery road surfaces
>
> If you shift down on slippery road surfaces to increase the engine braking effect, the drive wheels may lose traction.
>
> ► Do not shift down on slippery road surfaces to increase the engine braking effect.

Vehicles with automatic transmission may roll in neutral position N only for a short time. Allowing the wheels to roll for a longer period, e.g. when towing, leads to transmission damage.

IF THE VEHICLE THREATENS TO SKID, OR CANNOT BE STOPPED WHEN TRAVELLING AT A LOW SPEED, YOU CAN STABILISE THE VEHICLE USING THE FOLLOWING MEASURES:

- Shift the automatic transmission to neutral position N.
- Shift the manual transmission into neutral or disengage the clutch.
- Try to maintain control of the vehicle using corrective steering.

Drive particularly carefully on slippery roads. Avoid sudden acceleration, steering and braking manoeuvres.

Have your vehicle winterproofed at a qualified specialist workshop in good time for the onset of winter.

Please observe the notes on snow chains (⟶ page 56).

Regularly check the vehicle and remove snow or ice when travelling in wintry conditions.

ACCUMULATIONS OF SNOW AND ICE, PARTICULARLY WHEN FROZEN, IN THE AREA AROUND THE AIR INTAKE, MOVING PARTS, THE AXLES AND THE WHEEL WELLS MAY CAUSE THE FOLLOWING PROBLEMS:

- obstruction of the air intake
- damage to vehicle parts
- malfunctions owing to restriction of movement intended by design (e.g. reduced steering movement)

If there is any damage, inform a qualified specialist workshop.

INFORMATION ABOUT DRIVING OFF ROAD

WARNING
Risk of accident if you do not keep to line of fall on inclines

If you drive at an angle or turn on an incline, the vehicle could slip sideways, tip and rollover.

- ► Always drive on inclines in the line of fall (straight up or down) and do not turn.

WARNING
Risk of injury due to the acceleration force during off-road driving

You could, for example, be thrown from your seat.

- ► Always wear a seat belt when driving off-road.

WARNING
Risk of injury to hands when driving over obstacles

If you drive over obstacles or fall into tyre ruts, the steering wheel can move abruptly of its own accord.

- ► Hold the steering wheel firmly with both hands at all times.
- ► Always hold the steering wheel such that your thumbs are on the outer side of the steering wheel rim.
- ► When driving over obstacles, be prepared to briefly use more force when steering, if necessary.

WARNING
Risk of fire due to flammable material coming into contact with hot parts of the exhaust system

If combustible materials, e.g. leaves, grass or twigs, come into contact with hot parts of the exhaust system, they may ignite.

- ► When driving off-road or on unpaved surfaces, check the underside of the vehicle at regular intervals.
- ► In particular, remove any trapped parts of plants or other flammable material.
- ► If damage should occur, immediately inform a qualified specialist workshop.

NOTE
Damage to the vehicle after driving off-road

Foreign bodies, such as stones and branches, could become trapped on the vehicle underside or on wheels and tyres while you are driving and cause damage to the vehicle.

FOREIGN BODIES COULD CAUSE THE FOLLOWING DAMAGE:

- damage the suspension, the fuel tank or the brake system
- cause imbalances and thus vibrations

- ► Regularly remove any trapped foreign bodies, e.g. stones and branches.
- ► After driving off-road, check carefully whether there is any damage to the vehicle.
- ► If there is damage, have the vehicle checked at a qualified specialist workshop.

When driving off-road or on unpaved surfaces, check the vehicle underside, wheels and tyres at regular intervals. In particular, remove any trapped foreign bodies, e.g. stones and branches.

PLEASE OBSERVE THE FOLLOWING NOTES REGARDING FOREIGN BODIES OF THIS KIND:

- They may damage the suspension, the fuel tank or the brake system.
- They may cause imbalances and thus vibrations.
- They may be ejected from the vehicle when you continue driving.

If there is any damage, inform a qualified specialist workshop.

When driving off-road on steep inclines, first make sure that the AdBlue® tank is sufficiently filled. Therefore, ensure a level of at least 10 l before off-road driving.

When driving off-road and on construction sites, sand, mud and water, also mixed with oil, for example, can get into the brakes. This could lead to a reduction in braking effect or total brake failure, including as a result of increased wear. The braking characteristics vary depending on the material that has infiltrated the system. Clean the brakes after driving off-road. If you then notice a reduced braking effect or hear scraping noises, have the brake system checked immediately at a qualified specialist workshop. Adjust your driving style to the changed braking characteristics.

Driving off-road or on construction sites increases the possibility of vehicle damage which could in turn lead to the failure of certain major assemblies or systems. Adapt your driving style to the off-road driving conditions. Drive carefully. Have any vehicle damage repaired at a qualified specialist workshop as soon as possible.

When driving in rough terrain, do not shift the transmission to neutral position and do not disengage the clutch. You could lose control when attempting to brake the vehicle with the service brake. If your vehicle cannot manage an uphill incline, drive back down in reverse gear.

When loading your vehicle for driving off-road or on a construction site, keep the vehicle centre of gravity as low as possible.

CHECKLIST BEFORE DRIVING OFF-ROAD

- Check the fuel supply (⟶ page 450) and top up if necessary (⟶ page 32).
- Check the AdBlue® level(⟶ page 356) and top up if necessary (⟶ page 37).
- **Engine:** check the oil level and top up with oil if necessary (⟶ page 610). Before driving up or down extreme slopes, fill the oil to the maximum level.

ⓘ If you drive up or down extreme inclines or slopes, the [symbol] symbol may appear on the instrument cluster display. The engine operating safety is not put at risk if you have filled the engine oil to the maximum level beforehand.

- **Vehicle tool kit:** check that the jack is working (⟶ page 69).
- Make sure that a wheel spanner (⟶ page 69), a wooden support for the jack, a sturdy tow rope, a folding spade and a chock (present depending on equipment) are in the vehicle.
- **Tyres and wheels:** check the tyre tread depth (⟶ page 48) and the tyre pressure (⟶ page 36).

RULES FOR OFF-ROAD DRIVING

Always be aware of the vehicle's ground clearance and avoid obstacles such as, e.g. deep tyre ruts.

OBSTACLES CAN DAMAGE THE FOLLOWING PARTS OF THE VEHICLE, E.G.:

- suspension
- drivetrain
- fuel and operating fluid reservoirs

Therefore, always drive slowly off-road. If you must drive over obstacles, have the co-driver guide you.

ⓘ Mercedes-Benz recommends that you additionally carry a shovel and a recovery rope with a shackle in the vehicle.

- Make sure that loads and items of luggage are securely stowed or lashed down (→ page 593).
- Before driving off-road, stop the vehicle and engage a low gear.
- **Vehicles with DSR:** activate DSR when you are driving downhill (→ page 386).
- If the ground requires, temporarily deactivate ESP® when starting off (→ page 377).
- Only drive off-road with the engine running and a gear engaged.
- Drive slowly and smoothly. It may often be necessary to drive at walking pace.
- Avoid spinning wheels.
- Ensure that the wheels remain in contact with the ground.
- As a precaution, get out of the vehicle to take a look at the route ahead. Exercise the utmost caution when driving across unfamiliar, unpredictable terrain.
- Look out for obstacles (e.g. rocks, holes, tree stumps and tyre ruts).
- Avoid edges where the ground could crumble or break away.

NOTES ON DRIVING WHEN THERE IS WATER ON THE ROAD

Water ingress can damage the engine, electrics and transmission.

Water can also enter the air intake of the engine and cause engine damage.

OBSERVE THE FOLLOWING IF YOU MUST DRIVE THROUGH WATER:

- The water, when calm, must only reach the lower edge of the front bumper.
- Drive at walking pace at most; water could otherwise enter the vehicle interior or engine compartment.
- Vehicles travelling in front, or oncoming vehicles, can create waves which may exceed the maximum permissible height of the water.

The braking effect of the brakes is reduced after fording. Brake carefully while paying attention to the traffic conditions until braking power has been fully restored.

After the vehicle has forded at maximum depth several times, all oils in the major assemblies (differential, manual transmission/automatic transmission and transfer case) must be replaced.

RULES FOR OFF-ROAD FORDING

- Observe the safety notes and general notes on driving off-road.
- Check the depth and characteristics of the body of water before fording. The water, when calm, must only reach the lower edge of the front bumper.
- The climate control system is off (→ page 285).
- The stationary heater is off (→ page 294).
- Restrict the shift range to **1** or **2**.
- Avoid high engine speeds.
- Drive slowly and smoothly at no more than a walking pace.
- Ensure that no wave forms at the front of the vehicle while driving.
- After fording, dry the brakes.
- After the vehicle has forded at maximum depth several times, all oils in the major assemblies (differential, manual transmission/automatic transmission and transfer case) must be replaced.

CHECKLIST AFTER DRIVING OFF-ROAD

Driving off-road places greater demands on your vehicle than normal road operation. Check your vehicle after driving in rough terrain. This allows you to

detect damage promptly and reduce the risk of an accident for yourself and other road users. Clean your vehicle thoroughly before driving on public roads.

If you find damage to the vehicle after off-road driving, have the vehicle checked at a qualified specialist workshop immediately.

PLEASE NOTE THE FOLLOWING POINTS AFTER DRIVING OFF-ROAD, ON CONSTRUCTION SITES AND BEFORE DRIVING ON PUBLIC ROADS:

- **Vehicles with DSR:** deactivate DSR (⟶ page 386).
- Activate ESP® (⟶ page 377).
- Clean the exterior lighting, particularly the headlamps and tail lamps, and check them for damage.
- Clean the front and rear licence number plates.
- Clean the windscreen, windows and outside mirrors.
- Clean the steps, entrances and grab handles. This will make your footing safer.
- Clean the wheels and tyres, wheel wells and the underbody of the vehicle with a jet of water. This increases road adhesion, especially on wet road surfaces.
- Check the wheels and tyres and wheel wells for trapped foreign objects and remove them. Trapped foreign objects can damage the wheels and tyres or could be ejected from the vehicle when continuing the journey.
- Check the underbody for trapped branches or other parts of plants and remove them.
- Clean the brake disks, brake pads and axial joints, particularly after operation in sand, mud, grit and gravel, water or similar conditions.
- Check the entire floor assembly, the tyres, wheels, bodywork structure, brakes, steering, suspension and exhaust system for any damage.
- Check the service brake for operating safety, e.g. carry out a brake test.
- If you notice strong vibrations after driving off-road, check the wheels and drivetrain for foreign objects again. Remove any foreign objects which can lead to imbalances and thus cause vibrations. In the event of damage to the wheels and the drivetrain, visit a qualified specialist workshop immediately.

INFORMATION ABOUT DRIVING IN THE MOUNTAINS

The operating safety of the diesel engine is assured up to an elevation of 2500 m above sea-level. You may exceed this elevation for a short time, e.g. when driving over a mountain pass. Do not drive continuously at elevations above 2500 m. Otherwise you may damage the diesel engine.

When driving in the mountains, note that engine output – and thus start-off gradeability – will decrease with increasing altitude. The ECO start/stop function is no longer available when driving at heights of more than 2500 m above sea level. Notes on braking on downhill gradients can be found in the notes on braking (⟶ page 317).

Deactivating or activating the reverse warning device

⚠ **WARNING**
Risk of accidents due to persons or objects in the area in which you are manoeuvring

Other road users may not hear or may ignore the warning tone of the reversing warning device. There is a risk of an accident.

- ▶ Make sure that there are no persons or objects in the manoeuvring area during manoeuvring.
- ▶ If necessary, a second person must assist with manoeuvring.

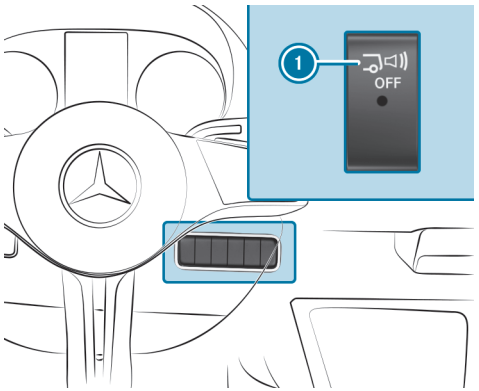

The reverse warning device is a system designed to assist you in ensuring the safety of other road users. The reverse warning device cannot guarantee that no persons or objects are situated behind the vehicle.

The reverse warning device is an acoustic warning system integrated into the tail lamp of the vehicle. When you shift to reverse gear, the reverse warning device is activated.

Observe the legal requirements for the country in which you are currently driving when using the reverse warning device.

For vehicles in the United Kingdom and Switzerland: the reverse warning device can be deactivated.

► **To deactivate/activate:** press the upper section of switch (1).

If the reverse warning device is deactivated, the indicator lamp in switch (1) lights up.

ECO start/stop function

HOW THE ECO START/STOP FUNCTION OPERATES

THE ENGINE WILL BE STOPPED AUTOMATICALLY IF THE FOLLOWING CONDITIONS ARE MET:

- **Vehicles with manual transmissions:** You decelerate the vehicle to a lower speed, engage neutral N and then release the clutch pedal.
- **Vehicles with automatic transmissions:** you stop the vehicle in transmission position D or N.
- The vehicle meets all the conditions for automatic engine stop.

When the vehicle is at a standstill, the symbol Ⓐ will appear on the instrument cluster. If all vehicle conditions are not met, the symbol Ⓐ will appear on the instrument cluster.

THE ENGINE WILL RESTART AUTOMATICALLY IN THE FOLLOWING CASES:

- **Vehicles with manual transmissions:** You depress the clutch pedal.
- **Vehicles with automatic transmissions:** You release the brake pedal in transmission position D and with the HOLD function deactivated.
- **Vehicles with automatic transmissions:** You select transmission position D or R.
- You depress the accelerator pedal.
- The vehicle requires an automatic engine start.

If the engine was switched off by the ECO start/stop function and you leave the vehicle, a warning tone will sound. A display message reading Vehicle is operational Switch off vehicle before exiting will also appear on the instrument cluster. If you do not switch off the vehicle, it will automatically be switched off after one minute.

SWITCHING THE ECO START/STOP FUNCTION ON/OFF

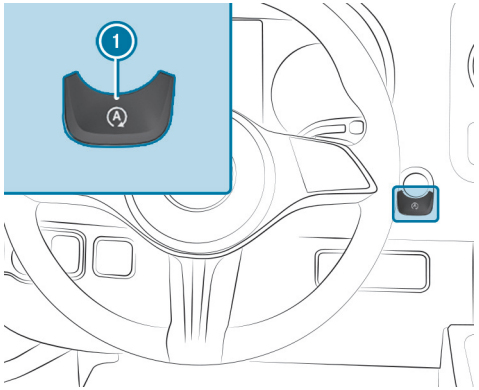

► Press the button 1.

An indicator will appear on the instrument cluster when the ECO start/stop function is switched on or off.

ⓘ When the vehicle is stationary, an indicator will appear on the instrument cluster when the ECO start/stop function is switched off.

Function of the ECO display

The ECO display summarises your driving characteristics from the start of a journey to its completion and assists you in adopting an economical driving style to maximise range. If you interrupt your journey and switch off the vehicle for longer than four hours, the ECO display values will automatically be reset.

FOR VEHICLES WITH MANUAL TRANSMISSION

YOU CAN INFLUENCE CONSUMPTION BY IMPLEMENTING THE FOLLOWING:

- Observing the gearshift recommendations (⟶ page 333).

FOR VEHICLES WITH AUTOMATIC TRANSMISSION

YOU CAN INFLUENCE CONSUMPTION BY IMPLEMENTING THE FOLLOWING:

- Anticipate road and traffic conditions.

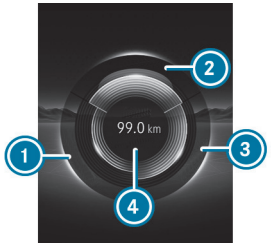

THE SEGMENT'S LETTERING WILL LIGHT UP BRIGHTLY, THE OUTER EDGE WILL LIGHT UP AND THE SEGMENT WILL BE FILLED WHEN THE VEHICLE IS DRIVEN WITH THE FOLLOWING CHARACTERISTICS:

- 1 ACCELERATION: moderate acceleration
- 2 CONSTANT: consistent speed
- 3 COASTING: gentle deceleration and coasting

THE SEGMENT'S LETTERING IS GREY, THE OUTER EDGE IS DARK AND THE SEGMENT EMPTIES WHEN THE VEHICLE IS DRIVEN WITH THE FOLLOWING CHARACTERISTICS:

- 1 ACCELERATION: sporty acceleration
- 2 CONSTANT: fluctuating speed

- ③ COASTING: heavy braking

YOU HAVE DRIVEN IN AN ECONOMICAL MANNER IF:

- The three segments are completely filled simultaneously.
- The edges of all three segments light up.

The additional range achieved as a result of your driving style compared to a driver with a very sporty driving style will be shown in the centre of the display ④. The range displayed does not indicate a fixed reduction in consumption.

Diesel particulate filter

NOTES ON REGENERATION

⚠ **DANGER**
Danger to life from toxic exhaust gas in enclosed spaces

Combustion engines emit toxic exhaust gases suchas carbon monoxide. Inhaling these exhaust gases is hazardous to health and leads to poisoning.

► Never leave the engine or, if present, the stationary heater running in an enclosed space without sufficient ventilation.

⚠ **WARNING**
Risk of fire caused by hot exhaust system parts

Flammable materials such as leaves, grass or twigs may ignite.

► Park the vehicle so that no flammable material can come into contact with hot vehicle components.

► In particular, do not park on dry grassland or harvested grain fields.

⚠ **WARNING**
Risk of accident with regeneration activated

The transmission is in neutral if the vehicle has a manual transmission and the regeneration of the diesel particulate filter is activated. The vehicle may thereby inadvertently roll away.

► Apply the parking brake.

► Turn the front wheels towards or away from the kerb on steep uphill or downhill gradients.

► Use a chock.

NOTE
Damage due to hot exhaust gases

Very hot exhaust gases are emitted from the tailpipe during regeneration.

- During regeneration, maintain a minimum distance of 2 m to other objects, e.g. parked vehicles.
- Carry out regeneration only on concrete or asphalt surfaces.
- Do not carry out regeneration in the immediate vicinity of people.
- Carry out regeneration in the open air and not in closed halls or rooms.
- Make sure that there are no flammable materials or objects in the area of the exhaust system.

Regeneration is permitted only while you are driving or at a qualified specialist workshop with an extraction system.

Regeneration without interruption takes approximately 20-25 minutes.

If the vehicle is used predominantly for short-distance driving or power take-off is used when the vehicle is stationary, this could lead to malfunctions in the automatic cleaning function of the diesel particulate filter. As a result, the diesel particulate filter may become overloaded, causing loss of engine power.

ⓘ If your vehicle has a particulate filter load display, you can have it shown on the instrument cluster (→ page 329).

If necessary, you can request regeneration of the diesel particulate filter via the regeneration display (→ page 328).

ⓘ Regular regeneration of the diesel particulate filter can prevent malfunctions, thinning of the engine oil and loss of engine power.

ⓘ Manual regeneration of the diesel particulate filter when the vehicle is stationary is classified as special equipment and is not installed as standard.

STARTING AND CANCELLING REGENERATION

Requirements:

- All system conditions are fulfilled.
- The load condition of the diesel particulate filter is at least 100% and at most 129%.
- The vehicle is stationary.
- The parking brake is applied.
- The vehicle has been started.
- Transmission position N (neutral) is engaged.
- Transmission position P is engaged.
- If the vehicle has a transmission-mounted power take-off, the latter is deactivated.
- If the vehicle has a parameterisable special module, the rpm request is deactivated.

ⓘ If your vehicle has a particulate filter load display or a regeneration display, you can have it shown on the instrument cluster (→ page 329).
If necessary, you can request regeneration of the diesel particulate filter via the regeneration display.

ⓘ Regeneration when the vehicle is stationary is no longer possible from a load condition of 130%.

On-board computer:

Service ▶▶ Particulate filter

- **To request regeneration:** Select OK.
- **To observe the vehicle surroundings:** Make sure that no injuries or damage due to the hot exhaust gases can occur in the vehicle surroundings. Confirm for three seconds with OK.

  Regeneration will start. The engine speed will increase and a message reading Regeneration active will appear.

ⓘ The duration of regeneration depends on the load condition of the diesel particulate filter (approximately 20-25 minutes).
After successful regeneration, the engine speed will be reduced again.

- **To cancel regeneration:** Switch off the vehicle or depress the coupling (for manual transmission) or brake (for automatic transmission).

  Regeneration will be cancelled.

Regeneration cannot be requested again until the load condition of the diesel particulate filter is at least 100% and at most 129%.

DISPLAYING THE LOAD

On-board computer:

Service ▶▶ Particulate filter

The load of the diesel particulate filter is displayed.

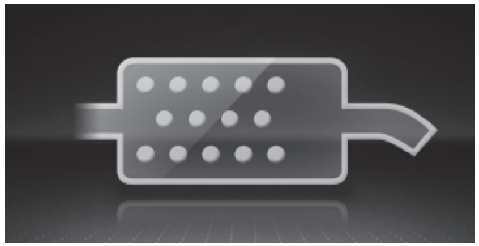

Load display at 75% load

- **To exit the display:** press the back button on the left-hand side of the steering wheel.

Battery main switch

Notes on the battery main switch

NOTE
Damaged to control units and cooled component parts

When the main battery switch is removed immediately, cooling of important component parts and the storage of parameters in the control units can be interrupted. This can significantly reduce the service life of component parts and control units.

► Make sure that vehicle is switched off. Then wait at least 20 minutes before removing the battery main switch.

You can use the battery main switch to disconnect the current to all your vehicle's consumers. This will prevent uncontrolled battery discharge caused by quiescent current consumers.

If your vehicle is equipped with an auxiliary battery in the engine compartment or in the base of the co-driver seat, you must disconnect both batteries. Only then is the electrical system fully disconnected from the power supply.

ONLY DISCONNECT THE VEHICLE FROM THE POWER SUPPLY USING THE BATTERY MAIN SWITCH IN THE FOLLOWING SITUATIONS:

- The vehicle has been stationary for a longer time
- it is absolutely necessary to disconnect the vehicle from the power supply

After switching on the power supply, you will need to readjust the side windows (→ page 206) and the electric sliding door (→ page 191).

A break in the power supply is entered in the DTCO® (digital tachograph) as an event in the fault memory.
See the separate DTCO® operating instructions.

Switching the power supply on/off

SWITCHING OFF THE POWER SUPPLY

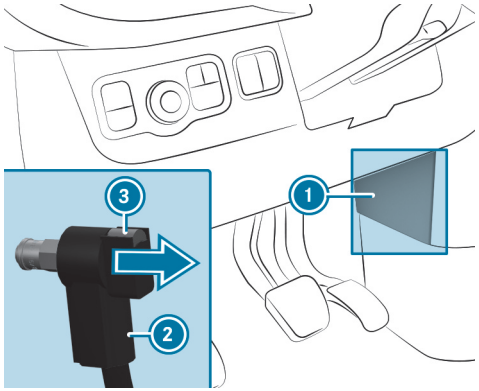

Battery main switch

> ⓘ Note the remaining time before the next service due date (⟶ page 604) . The time recording is also disrupted if the power supply is disconnected.

- Switch off the vehicle and wait at least 20 minutes.
- Pull cover ① on the upper edge towards the driver's door and remove it upwards.
- Press and hold button ③.
- Pull plug ② out of the earth pin.
- Push plug ② as far as possible in the direction of the arrow so that it cannot make contact with the earth pin.
  All starter battery consumers are disconnected from the power supply.

SWITCHING ON THE POWER SUPPLY

- Press plug ② onto the earth pin until you feel it engage and plug ② is in full contact with the earth pin.
  All starter battery consumers are reconnected to the power supply.
- Insert cover ① from above and press its right edge into the lining of the centre console.

Manual transmission

Using the gearshift lever

NOTE
Damage to the engine and transmission by shifting to a gear that is too low

- When changing between gears 5 and 6 push the gearshift lever to the right.
- Do not shift down at high speeds.

NOTE
Damage to the transmission by shifting to reverse gear R while the vehicle is in motion

- Only shift into reverse gear R when the vehicle is stationary.

NOTE
Damage to the clutch due to improper use

Holding the vehicle on inclines with the clutch slipping may damage the clutch.

- Do not allow the clutch to slip in order to hold the vehicle on inclines.

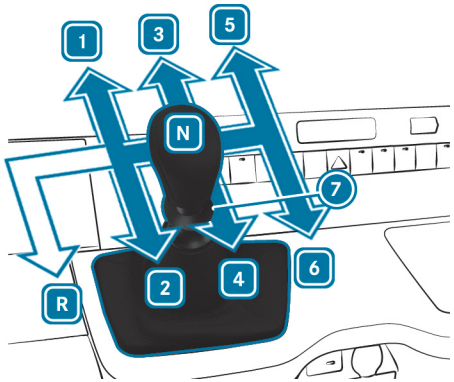

Vehicles with rear-wheel drive and all-wheel drive

R Reverse gear

1 - 6 Forward gears

7 Reverse gear pull ring

N Neutral

- Fully depress the clutch pedal and shift the gearshift lever to the desired position.

Depending on the vehicle equipment, the maximum design speed in reverse gear is 8 km/h, 20 km/h or 60 km/h.

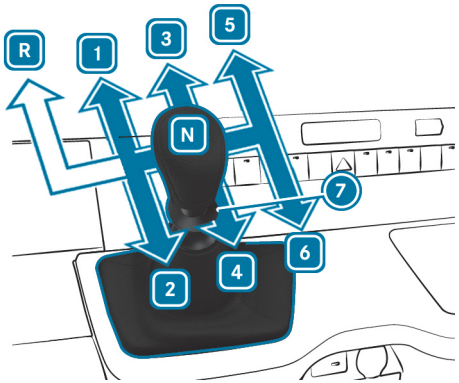

Vehicles with front-wheel drive

R Reverse gear

1 - 6 Forward gears

7 Reverse gear pull ring

N Neutral

► Fully depress the clutch pedal and shift the gearshift lever to the desired position.

ⓘ Depending on the vehicle equipment, the maximum design speed in reverse gear is 8 km/h, 20 km/h or 60 km/h.

Gearshift recommendation

The gearshift recommendation assists you in adopting an economical driving style. Depending on the equipment, these will appear at the top or bottom of the instrument cluster display.

► If gearshift recommendation 1 appears, shift to the recommended gear.

ⓘ In vehicles with an ECO start/stop function, a gearshift recommendation to shift to neutral N will be displayed as well.

Automatic transmission

DIRECT SELECT lever

FUNCTION OF THE DIRECT SELECT LEVER

WARNING
Accident– and risk of injury with unsupervised children in the vehicle

IF YOU LEAVE CHILDREN UNATTENDED IN THE VEHICLE, THEY CAN IN PARTICULAR

- Open doors and thereby endanger other persons or road users.
- get out of the car and are hit by traffic.
- Operate vehicle equipment and become trapped, forexample.

IN ADDITION, THE CHILDREN COULD ALSO SET THE VEHICLE IN MOTION, FOR EXAMPLEBY:

- releasing the parking brake.
- change the gearbox setting.
- start the vehicle.

► Never leave children unattended in the vehicle.

► When leaving the vehicle, always take the SmartKey with you and lock the vehicle.

► Keep the key out of reach of children.

WARNING
Risk of accident due to incorrect gearshifting

If the engine speed is higher than the idle speed and you engage the transmission position D or R, the vehicle may accelerate sharply.

► If you engage the transmission position D or R when the vehicle is at a standstill, always depress the brake pedal firmly and do not accelerate at the same time.

WARNING
Risk of accident and injury when the transmission position is not engaged

The current transmission position will be highlighted on the instrument cluster display.

If the selected transmission position is not highlighted, the vehicle may pull away in the wrong direction or roll away.

- After changing the transmission position, always check the transmission position display on the instrument cluster.

If the transmission position is not highlighted on the instrument cluster display even after a short time:

- Pay attention to the display messages.
- Pull away carefully and check the engaged transmission position.
- When parking, engage the parking brake and secure the vehicle against rolling away.
- Have the transmission checked immediately at a qualified specialist workshop.

NOTE
Transmission damage due to shifting at high engine speed or when the vehicle is rolling

You can damage the automatic transmission if you shift from D to R, from R to D or directly to P when the engine speed is too high or the vehicle is rolling.

- Only change the transmission position when the vehicle is stationary.

You can use the DIRECT SELECT lever to switch the transmission position. The current transmission position will appear highlighted on the instrument cluster display (→ page 454).

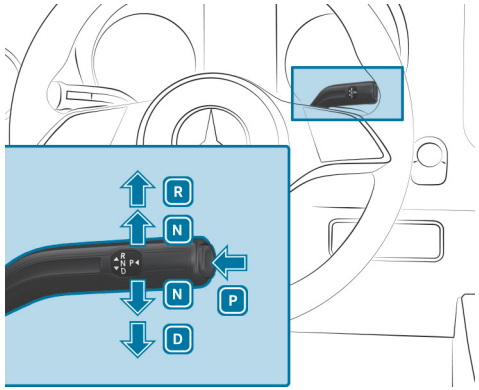

P Park position
R Reverse gear
N Neutral
D Drive position

SELECTING REVERSE GEAR R

WARNING
Risk of accident due to incorrect gearshifting

If the engine speed is higher than the idle speed and you engage the transmission position D or R, the vehicle may accelerate sharply.

- If you engage the transmission position D or R when the vehicle is at a standstill, always depress the brake pedal firmly and do not accelerate at the same time.

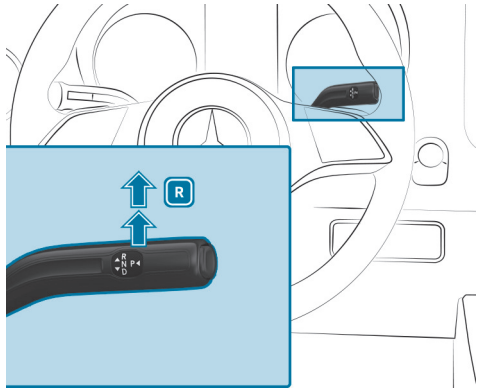

- Depress the brake pedal and push the DIRECT SELECT lever upwards past the first point of resistance.

SELECTING NEUTRAL N

WARNING
Risk of accident due to incorrect gearshifting

If the engine speed is higher than the idle speed and you engage the transmission position D or R, the vehicle may accelerate sharply.

- If you engage the transmission position D or R when the vehicle is at a standstill, always depress the brake pedal firmly and do not accelerate at the same time.

WARNING
Risk of accident and injury when neutral position is engaged

If you park the vehicle with the transmission in neutral position N and the parking brake is not engaged, the vehicle may roll away.

There is a risk of accident and injury!

- Before parking the vehicle, apply the parking brake.

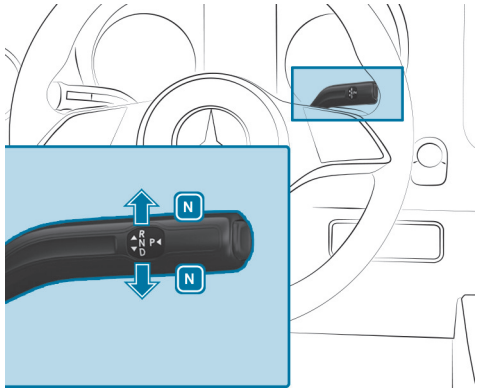

- Press the brake pedal and the DIRECT SELECT lever upwards or downwards to the first point of resistance.

Subsequently releasing the brake pedal will allow you to move the vehicle freely, e.g. to push it or tow it away.

IF YOU WANT THE AUTOMATIC TRANSMISSION TO REMAIN IN NEUTRAL N WHEN THE VEHICLE IS SWITCHED OFF, CARRY OUT THE FOLLOWING:

- Start the vehicle.
- Depress the brake pedal and engage neutral N.
- Release the brake pedal.
- Switch off the vehicle.

ⓘ If you then leave the vehicle and the key is still in the vehicle, the automatic transmission will stay in neutral N from then on.

SELECTING PARK POSITION P

⚠ **WARNING**
Accident– and risk of injury with unsupervised children in the vehicle

IF YOU LEAVE CHILDREN UNATTENDED IN THE VEHICLE, THEY CAN IN PARTICULAR

- Open doors and thereby endanger other persons or road users.
- get out of the car and are hit by traffic.
- Operate vehicle equipment and become trapped, forexample.

IN ADDITION, THE CHILDREN COULD ALSO SET THE VEHICLE IN MOTION, FOR EXAMPLEBY:

- releasing the parking brake.
- change the gearbox setting.
- start the vehicle.

- Never leave children unattended in the vehicle.
- When leaving the vehicle, always take the SmartKey with you and lock the vehicle.
- Keep the key out of reach of children.

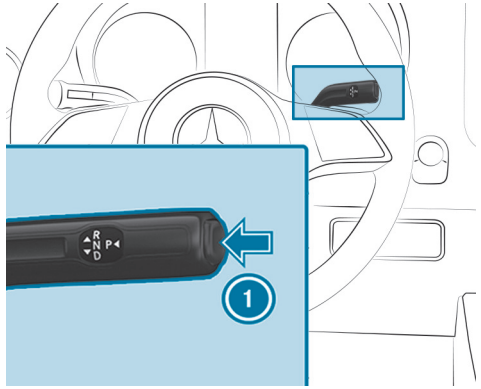

NOTE
Damage due to engaging park position P while the vehicle is rolling

If you shift the transmission into park position P while the vehicle is rolling, the transmission may be damaged.

- If the vehicle is rolling, do not open a door.
- Only engage the park position P when the vehicle is stationary.

- Observe the notes on parking the vehicle (→ page 361).
- Depress the brake pedal until the vehicle is stationary.
- When the vehicle is stationary, press button 1.

  When the P transmission position indicator is shown, park position is engaged. If the P transmission position indicator is not shown, apply the parking brake. Secure the vehicle against rolling away with a wheel chock or a non-sharp-edged object.

Depending on the situation, it may take a short time until transmission position P is engaged. Therefore, always pay attention to the transmission position indicator.

PARK POSITION P WILL BE ENGAGED AUTOMATICALLY WHEN ONE OF THE FOLLOWING CONDITIONS IS MET:

- You switch the stationary vehicle off in transmission position D or R.
- You open the fully closed driver's door when the vehicle is stationary in transmission position D or R.
- When the vehicle is moving, you switch if off in transmission position D or R and bring it to a standstill.
- When the HOLD function is active or the Active Distance Assist DISTRONIC system is active (vehicle stationary), the driver leaves the seat or the driver's seat belt buckle is unfastened.
- When the vehicle is rolling, you shift to transmission position N, bring the vehicle to a standstill and open the fully closed driver's door when the vehicle is stationary.
- Engaging park position P automatically is required by the vehicle.

To manoeuvre with an open driver's door, open the driver's door while the vehicle is stationary and engage transmission position D or R again.

SELECTING DRIVE POSITION D

> **WARNING**
> Risk of accident due to incorrect gearshifting
>
> If the engine speed is higher than the idle speed and you engage the transmission position D or R, the vehicle may accelerate sharply.
>
> ▶ If you engage the transmission position D or R when the vehicle is at a standstill, always depress the brake pedal firmly and do not accelerate at the same time.

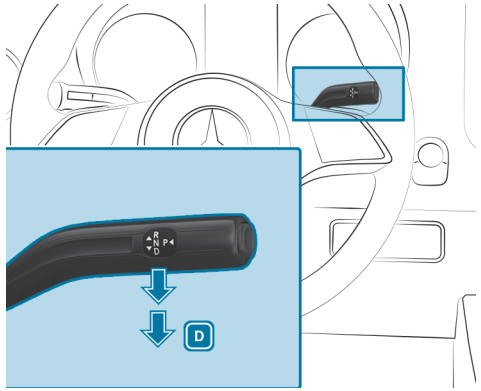

▶ Depress the brake pedal and push the DIRECT SELECT lever downwards past the first point of resistance.

WHEN THE AUTOMATIC TRANSMISSION IS IN TRANSMISSION POSITION D, IT WILL SHIFT GEARS AUTOMATICALLY. THIS DEPENDS ON THE FOLLOWING FACTORS:

- Accelerator pedal position
- Vehicle speed

Restricting the shift range

Requirements:

- Transmission position D is engaged (⟶ page 339).

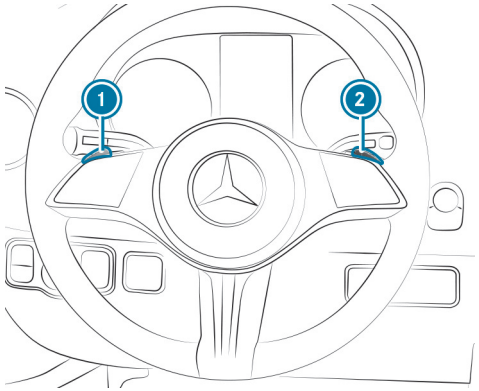

▶ **To restrict the shift range:** briefly pull steering wheel gearshift paddle 1.

The automatic transmission will shift to the next gear down, depending on the gear currently engaged. The shift range will also be restricted.

The selected shift range will be shown on the instrument cluster display. The automatic transmission will shift only as far as the selected gear.

▶ Pull and hold steering wheel gearshift paddle 1.

The automatic transmission will change to a shift range that allows easy acceleration and deceleration. To do this, the automatic transmission will shift down one or more gears and restrict the shift range.

The selected shift range will be shown on the instrument cluster display. The automatic transmission will shift only as far as the selected gear.

ⓘ The automatic transmission will not shift down if you pull steering wheel gearshift paddle ① whilst travelling at too high a speed.
The automatic transmission will not shift up if the shift range is restricted and the maximum engine speed of the restricted shift range has been reached.

- **To de-restrict the shift range:** briefly pull steering wheel gearshift paddle ②.

  The automatic transmission will shift to the next gear up, depending on the gear currently engaged. This will de-restrict the shift range at the same time.
- **To de-restrict the shift range:** pull and hold steering wheel gearshift paddle ②.

or

- Engage transmission position D again (⟶ page 339).

  The automatic transmission will shift up one or more gears depending on the gear currently engaged. Simultaneously, the shift range restriction will be deactivated and the transmission position will appear on the instrument cluster display D.

RECOMMENDED SHIFT RANGES FOR THE FOLLOWING DRIVING CONDITIONS:

3 Use the engine's braking effect.

2 Use the engine's braking effect on downhill gradients and when driving on steep roads and in mountainous areas as well as in arduous conditions.

1 Use the engine's braking effect on extremely steep downhill gradients and on long downhill stretches.

Using kickdown

- **For maximum acceleration:** depress the accelerator pedal beyond the point of resistance.
- Ease off the accelerator pedal once the desired speed is reached.

Deactivating the park pawl manually (vehicles with front-wheel drive)

ⓘ **Vehicles with automatic transmission and front-wheel drive:** if there is a malfunction, the automatic transmission may be locked in position P. In this case, the park pawl can be deactivated mechanically, e.g. for towing the vehicle away (⟶ page 70).

REQUIREMENTS:

- You require the release tool from the vehicle tool kit (⟶ page 664).

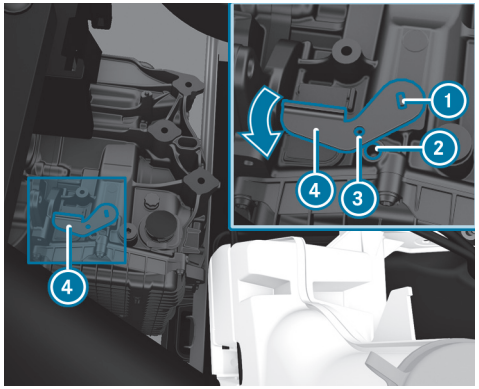

- Apply the parking brake.
- Open the bonnet (⟶ page 606).
- Attach release tool ④ to transmission ① and turn it in the direction of the arrow until recess ③ is located above opening ②.
- Insert a suitable tool, such as a screwdriver, through hole ③ into recess ②.

  Release tool ④ will be securely in position.

  The park pawl will be released and it will not be possible to select position P.
- Observe the notes on towing away (⟶ page 70).

ⓘ When release tool ④ is removed, the transmission will automatically spring back to position P.

All-wheel drive

Notes on all-wheel drive

All-wheel drive ensures permanent drive for all four wheels and, together with ESP®, improves the traction of your vehicle. There is smart closed-loop control of the drive torque between the front and rear axles.

Traction control for all-wheel drive also takes place via the brake system. This may cause the brake system to overheat. Decelerate or stop to let the brake system cool down.

IF A WHEEL SPINS DUE TO INSUFFICIENT TRACTION, OBSERVE THE FOLLOWING NOTES:

- When pulling away, make use of the assistance from the traction control integrated in ESP®. Depress the accelerator pedal as far as necessary.
- Take your foot off the accelerator pedal, slowly, while the vehicle is in motion.

In wintry road conditions, use winter tyres (M+S tyres) and, if necessary, snow chains (→ page 56). Only in this way can the maximum effect of all-wheel drive be achieved.

Use DSR (Downhill Speed Regulation) when driving downhill off road (→ page 386).

If you fail to adapt your driving style or if you are inattentive, the all-wheel drive system can neither reduce the risk of an accident nor override the laws of physics. The all-wheel drive system cannot take road, weather and traffic conditions into account. The all-wheel drive system is only an aid. You are responsible for maintaining a safe distance from the vehicle in front, for vehicle speed, for braking in good time and for staying in lane.

NOTE
Damage caused by use of a single-axle dynamometer

Operating an all-wheel-drive vehicle on a single-axle dynamometer may cause damage to the drivetrain and brake system.

- ► Carry out a function or performance test only on a two-axle dynamometer.
- ► Consult a qualified specialist workshop before you operate the vehicle on a dynamometer.

NOTE
Damage to transfer case caused by incorrect towing

If you tow the vehicle with one axle raised, the transfer case may be damaged. Damage of this type is not covered by the Mercedes-Benz Limited Warranty.

- Never tow the vehicle with one axle raised.
- Tow the vehicle only with all wheels on the ground or with the entire vehicle raised.
- Follow the instructions for towing the vehicle with all wheels in contact with the ground.

Electronic level control

Function of ENR (electronic level control)

WARNING
Risk of becoming trapped due to the vehicle lowering

When lowering the vehicle, persons may become trapped if body parts are between the vehicle body and the tyres or underneath the vehicle.

- Make sure nobody is underneath the vehicle or in the immediate vicinity of the wheel arches when you lower the vehicle.

WARNING
Risk of injury due to the jack tipping over

If you park a vehicle with air suspension, the air suspension can remain active for up to an hour, even if the vehicle is switched off. If you then raise the vehicle using the jack, the air suspension will attempt to even out the vehicle level.

The jack can tip over.

- Before raising the vehicle, press the Service button on the remote control for the air suspension.
  This prevents the vehicle level from being automatically readjusted or manually raised or lowered.

WARNING
Risk of accident due to lowered or raised chassis

Modifying the vehicle frame may greatly impair braking and handling characteristics. It could also result in exceeding the permissible height for the vehicle.

- Set the driving level before pulling away.

WARNING
Risk of accident due to a malfunction of electronic level control

The vehicle level may be too high, too low or asymmetrical.

The driving and steering characteristics of the vehicle may be noticeably different.

- Adapt your driving style to the changed driving characteristics.
- Stop, paying attention to road and traffic conditions.
- Consult a qualified specialist workshop.

NOTE
Risk of damage to the chassis from lowered vehicle level

If electronic level control is malfunctioning or readjusts while you are driving, the vehicle level may be lowered.

- Pay attention to the road conditions and ensure there is sufficient ground clearance.
- Drive carefully.

The vehicle level depends on the load condition and load distribution. Electronic level control adjusts the level of the rear axle automatically on vehicles with an air-sprung rear axle. The vehicle level is thereby always maintained at the driving level, regardless of vehicle load. Driving dynamics remain unaffected. The height difference between the sides of the vehicle may be up to 1 cm.

Electronic level control is not engine-dependent and is only operational when the vehicle is switched on. The electronic level control compressor works audibly.

If the compressor works constantly or starts up several times per minute, electronic level control is malfunctioning.

Depending on the vehicle's equipment, electronic level control switches between manual mode and automatic mode. This depends on the speed or the position of the parking brake.

Depending on the speed signal: manual mode is activated when the vehicle is stationary. You may raise or lower the vehicle level. If you drive faster than 10 km/h, manual mode is deactivated and the vehicle level is set.

Depending on the parking brake: manual mode is activated when the parking brake is engaged. You may raise or lower the vehicle level to load and unload. When you release the parking brake, manual mode is deactivated and the vehicle level is set.

When working on the vehicle or changing a wheel, you can deactivate electronic level control (⟶ page 345).

If electronic level control is malfunctioning or the vehicle level is too high or too low, a warning tone sounds.

The driving and steering characteristics of the vehicle will be noticeably different. Electronic level control adjusts the vehicle level to the normal level as soon as possible. Drive on carefully until the warning tone stops. Only then is the vehicle at normal level.

TO RESTORE THE VEHICLE LEVEL, AUTOMATIC MODE AND ELECTRONIC LEVEL CONTROL AUTOMATICALLY SWITCH ON AGAIN DEPENDING ON THE OPTION SELECTED:

- when the parking brake is released
- from speeds of approximately 10 km/h

If the electronic level control compressor is in danger of overheating, for example owing to repeated raising or lowering within a short period, electronic level control is deactivated. You can raise or lower the vehicle level again after a few minutes.

Raising and lowering the vehicle level

Requirements:

- The vehicle is switched on.

- **Depending on the parking brake:** the vehicle is parked and the parking brake is engaged.
- **Depending on the speed signal:** the vehicle was parked and a vehicle speed of 10 km/h is subsequently not exceeded.

USING THE REMOTE CONTROL

CERTAIN SPECIAL EQUIPMENT ENABLES OTHER OPERATION OPTIONS:

- Ambulance: raising the vehicle level above the driving level (centre position) is not possible. Only the lowest position and the driving level can be set.
- Speed signal: in order to operate electronic level control, the parking brake must not be applied. Electronic level control can be operated manually up to 10 km/h. If this speed is exceeded, driving level will be set automatically.
- 30 minute run-on module: electronic level control can be operated up to 30 minutes after switching off the vehicle.

The remote control is located in a holder on the B--pillar on the driver's side. Remove the remote control from the holder before use.

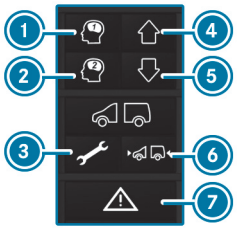

Electronic level control performs a self-check regularly when it is activated and while in use. Indicator lamp 7 on the remote control lights up for about one second when you switch on the vehicle.

THERE IS A MALFUNCTION IF INDICATOR LAMP 7 BEHAVES IN THE FOLLOWING WAYS:

- the indicator lamp does not light up when you switch on the vehicle

  or
- the indicator lamp then lights up again or flashes

In addition, a warning tone is emitted from the remote control for approximately 30 seconds. The fault that has been detected can be shown using the indicator lamps (signalling of fault codes).

► **To raise or lower the vehicle level:** press and hold button 4 or 5 until the vehicle level reaches the required height.

The indicator lamp on button 4 or 5 flashes as long as the vehicle level is being changed. When the vehicle level has been set, the indicator lamp on button 4 or 5 lights up.

► **To lower automatically:** briefly press button 5.

ELECTRONIC LEVEL CONTROL AUTOMATICALLY LOWERS THE VEHICLE TO THE NEXT LOWER POSITION:

- From the highest position to driving level
- From driving level to the lowest position

The indicator lamp on button 5 flashes as long as the vehicle level is being changed. When the vehicle level has been set, the indicator lamp on button 5 lights up.

ⓘ By pressing button ④ during the movement, the original position will be reset.

- **To raise automatically:** briefly press button ④.

  ELECTRONIC LEVEL CONTROL AUTOMATICALLY RAISES THE VEHICLE TO THE NEXT HIGHER POSITION:

  - From the lowest position to driving level
  - From driving level to the highest position

  The indicator lamp on button ④ flashes as long as the vehicle level is being changed. When the vehicle level has been set, the indicator lamp on button ④ lights up.

ⓘ By pressing button ⑤ during the movement, the original position will be reset.

- **To raise or lower automatically to driving level (centre position):** press and hold button ⑥.

  Electronic level control automatically raises or lowers the vehicle to driving level.

- **To save the set vehicle level:** set the required vehicle level.

- Press and hold button ① or ② until you hear a warning tone.

  The vehicle level set has been saved on corresponding button ① or ②.

- **To call up the saved vehicle level:** briefly press button ① or ②.

  Electronic level control automatically raises or lowers the vehicle to the saved driving level.

  The indicator lamp on button ① or ② flashes as long as the vehicle level is being changed. When the vehicle level has been set, the indicator lamp on button ① or ② lights up.

SERVICE MODE

ⓘ Service mode may only be activated or deactivated at a qualified specialist workshop by trained personnel. In service mode, the air suspension system is deactivated for maintenance or error detection.

- **To switch on:** press the ③ button.

  Service mode is active and the indicator lamp in button ③ lights up continuously.

- **To deactivate:** press button ③.

  Service mode is deactivated and the indicator lamp in button ③ switches off.

USING THE BUTTON IN THE SWITCH PANEL OR IN THE REAR

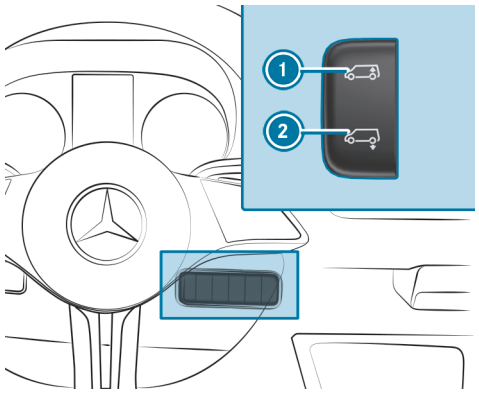

Button in the switch panel

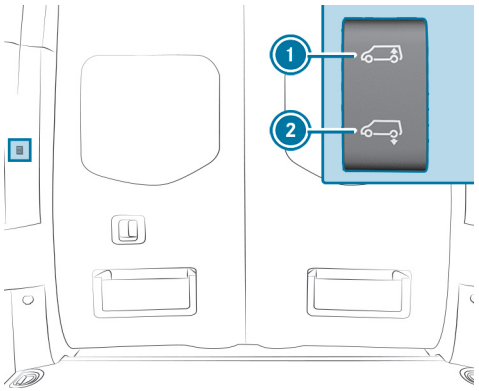

Button in the rear

- **To raise or lower the vehicle level:** press and hold button 1 or 2 until the vehicle level reaches the required height.
- **To lower automatically:** briefly press the lower section of switch 2.

  ELECTRONIC LEVEL CONTROL AUTOMATICALLY LOWERS THE VEHICLE TO THE NEXT LOWER POSITION:

  - From the highest position to driving level
  - From driving level to the lowest position

ⓘ By pressing button 1 during the movement, the original position will be reset.

- **To raise automatically:** briefly press the lower section of switch 1.

  ELECTRONIC LEVEL CONTROL AUTOMATICALLY RAISES THE VEHICLE TO THE NEXT HIGHER POSITION:

  - From the lowest position to driving level
  - From driving level to the highest position

ⓘ By pressing button 2 during the movement, the original position will be reset.

Using electronic level control for charging with air in an emergency

NOTE
Damage due to excess pressure

If the pressure in the air suspension bellows is too high, the compressed-air lines or the air suspension bellows can be damaged.

- In doing so, do not exceed the maximum permissible operating pressure of 900 kPa (9 bar/130 psi).

Only for vehicles with valves for electronic level control emergency charging: if electronic level control is malfunctioning and the vehicle is leaning, you can raise or lower the vehicle by connecting an external compressed-air source to one of the emergency valves (similarly to tyre valves). If electronic level control is not operational, you can drive on carefully to the nearest qualified specialist workshop and have the malfunction remedied.

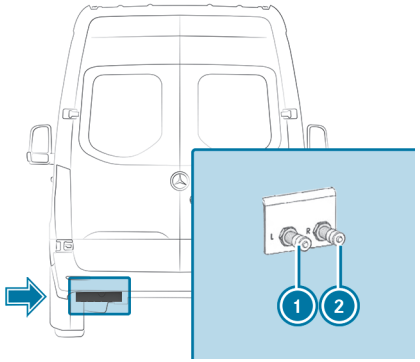

- Apply the parking brake.
- **Vehicles with automatic transmission:** shift the transmission to position P.
- Switch off the vehicle.
- Turn the valve cap of the corresponding valve (1 L = left, 2 R = right).
- Stand to the side of the vehicle when connecting the external compressed-air source.
- Raise or lower the vehicle level by charging or releasing compressed air until the driving level has been reached and the vehicle is in a horizontal position. While doing so, ensure you observe the maximum permissible operating pressure of 900 kPa (9 bar/130 psi).
- Disconnect the external compressed-air source.
- Tighten the valve cap on the valve (1 L = left, 2 R = right).
- Drive on carefully to the nearest qualified specialist workshop.

Rectifying problems with the electronic level control

YOU CANNOT RAISE OR LOWER THE VEHICLE LEVEL WHEN STATIONARY

POSSIBLE CAUSE:

- The compressor is in danger of overheating. After repeatedly raising and lowering the vehicle, electronic level control play protection is deactivated.

- Try to set the vehicle level manually again after approximately one minute.

or

POSSIBLE CAUSE:

- Electric level control has been deactivated due to undervoltage. The battery may not be charging.

Handling and ride comfort may suffer.

- Start the vehicle.
- Consult a qualified specialist workshop as soon as possible.

Refuelling

Refuelling the vehicle

WARNING
Risk of fire or explosion from fuel

Fuels are highly flammable.

- Fire, naked flames, smoking and creating sparks must be avoided.
- Before refuelling, switch off the vehicle and, if fitted, the stationary heater and keep switched off during filling.

WARNING
Risk of injury from fuels

Fuels are poisonous and hazardous to your health.

- Do not swallow fuel or let it come into contact with skin, eyes or clothing.
- Do not inhale fuel vapour.
- Keep children away from fuel.
- Keep doors and windows closed during the refuelling process.

If you or other people come into contact with fuel, observe the following:

- Immediately rinse fuel off your skin with soap and water.
- If fuel comes into contact with your eyes, immediately rinse them thoroughly with clean water. Seek medical attention immediately.
- If you swallow fuel, seek medical attention immediately. Do not induce vomiting.
- Change immediately out of clothing that has come into contact with fuel.

WARNING
Risk of fire and explosion due to electrostatic charge

Electrostatic charge can ignite fuel vapour.

- Before you open the fuel filler cap or take hold of the pump nozzle, touch the metallic vehicle body.
- To avoid creating another electrostatic charge, do not get into the vehicle again during the refuelling process.

WARNING
Risk of fire from fuel mixture

Vehicles with a diesel engine:

If you mix diesel fuel with petrol, the flash point of the fuel mixture is lower than that of pure diesel fuel.

While the vehicle is running, component parts in the exhaust system may overheat without warning.

- Never refuel using petrol.
- Never mix petrol with diesel fuel.

NOTE
Do not refuel diesel-engined vehicles with petrol

IF YOU HAVE ACCIDENTALLY REFUELLED WITH THE WRONG FUEL:

- Do not switch on the vehicle. Otherwise fuel can enter the engine.
  Even small amounts of the wrong fuel could result in damage to the fuel system and the engine. The repair costs are high.

- Consult a qualified specialist workshop.
- Have the fuel tank and fuel lines drained completely.

NOTE
Damage to the fuel system caused by overfilled fuel tanks

- Only fill the fuel tank until the pump nozzle switches off.

NOTE
Damage to the fuel system if the fuel level is too low or there is no fuel

- Do not let the fuel level to fall below 5 l while the vehicle is in use.
- If the tank is completely empty, refuel according to the instructions in this section.

NOTE
Damage to painted surfaces due to fuel

- Do not spill any fuel on painted surfaces.

ENVIRONMENTAL NOTE
Environmental damage due to improper handling of fuel

If fuels are handled improperly, they pose a danger to persons and the environment.

- Do not allow fuels to run into the sewage system, the surface waters, the ground water or into the ground.

Requirements:

- The vehicle is unlocked.
- The auxiliary heating is switched off.
- The vehicle is switched off.
- The left front door is open.

Do not get back into the vehicle during the refuelling process. You might build up an electrostatic charge again.

Observe the notes on operating fluids (→ page 741).

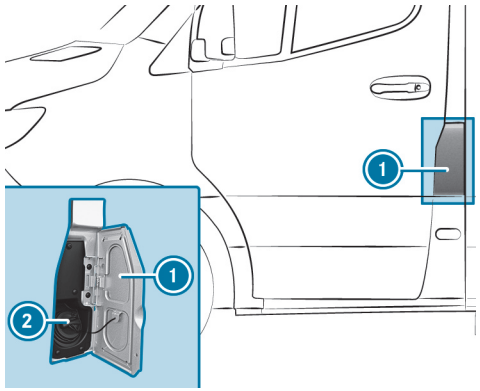

1 Fuel filler flap
2 Fuel filler cap

The fuel filler flap is beside the left front door when viewed in the direction of travel. The position of the fuel filler cap is also shown in the instrument cluster [⛽]. The arrow on the filling pump specifies the side of the vehicle.

- Open fuel filler flap 1.
- Turn fuel filler cap 2 anti-clockwise and remove it.
- Close all vehicle doors to prevent fuel vapours from entering the vehicle interior.
- Slide the filler neck of the pump nozzle fully into the tank, hook in place and refuel.
- Fill the fuel tank only until the pump nozzle switches off.

- Replace fuel filler cap ② and turn it clockwise.
  You will hear a click when the fuel filler cap is closed fully.
- Open the left front door.
- Close fuel filler flap ①.

ⓘ **Vehicles with an incorrect fuelling protector to prevent incorrect fuelling with petrol:** the filler neck is designed for refuelling at diesel filling pumps for cars.

ⓘ **Vehicles without an incorrect fuelling protector:** refuel at a diesel filling pump for cars if possible. However, you can also refuel at a diesel filling pump for trucks.

ⓘ If the fuel tank has been run completely dry, top up with at least 5 l of fuel.

Rectifying problems with the fuel and fuel tank

FUEL IS LEAKING FROM THE VEHICLE

POSSIBLE CAUSE:

- The fuel line or the fuel tank is defective.

- Apply the parking brake.
- Switch off the vehicle.
- Open the driver's door.
  The tow position is set to 0.
- Under no circumstances restart the vehicle!
- Contact a qualified specialist workshop.
- Take measures to contain leaked fuel.

THE VEHICLE DOES NOT START

POSSIBLE CAUSE:

- The fuel tank is completely empty.

- Refuel the vehicle with at least 5 l of fuel.

ⓘ If you have parked the vehicle on a downhill gradient, more fuel than prescribed may be necessary.

- Switch on the vehicle for approx. ten seconds.
- Crank the starter continuously for a maximum of ten seconds until the vehicle runs smoothly.

NOTE
Damage to the fuel system if incorrectly drained

- Switch the vehicle on and start it after around ten seconds at the earliest.

If the vehicle does not start:

- Switch on the vehicle again for approx. ten seconds.
- Crank the starter again continuously for a maximum of ten seconds until the vehicle runs smoothly.

If the vehicle does not start after three attempts:

- Contact a qualified specialist workshop.

AdBlue®

NOTES ON ADBLUE®

NOTE
Irritation to skin, eyes and respiratory tract due to AdBlue®

AdBlue® can cause irritation if inhaled or ingested, or if it comes in contact with eyes or skin. When the tank is open, ammonia vapours can escape.

- Do not inhale or ingest AdBlue®.
- Make sure AdBlue® does not come into contact with your skin, eyes or clothing.
- Keep AdBlue® away from children.
- Only fill the AdBlue® tank in well-ventilated areas.

IF A PERSON COMES INTO CONTACT WITH ADBLUE®, OBSERVE THE FOLLOWING:

- If you have ingested AdBlue®, drink plenty of water and seek medical attention immediately.
- If AdBlue® has come into contact with your eyes, rinse them for 15 minutes, also beneath the eyelids.
- Immediately rinse AdBlue® off your skin with soap and water.

NOTE
Damage and malfunctions caused by impurities in AdBlue®

IMPURITIES IN ADBLUE® RESULT IN THE FOLLOWING:

- higher emission values
- damage to the catalytic converter
- engine damage
- malfunctions in the AdBlue® exhaust gas aftertreatment system

▶ Avoid impurities in AdBlue®.

NOTE
Soiling due to crystallised AdBlue® residue

AdBlue® residue crystallises after some time.

▶ When topping up AdBlue®, immediately rinse any surfaces that it comes into contact with and remove all residue.

▶ AdBlue® can also be removed with a damp cloth and cold water.

▶ If AdBlue® has already crystallised, clean using a sponge and cold water.

ENVIRONMENTAL NOTE
Staining due to AdBlue®

AdBlue® residue crystallises after some time and stain the affected surfaces.

▶ Immediately rinse surfaces that come in contact with AdBlue® when filling with water or remove AdBlue® with a damp cloth and cold water.

If AdBlue® has already crystallised, clean using a sponge and cold water.

AdBlue® is a liquid urea solution used for exhaust gas aftertreatment of diesel engines. In order for the exhaust gas aftertreatment to function properly, only use AdBlue® in accordance with ISO 22241.

ADBLUE® HAS THE FOLLOWING PROPERTIES:

- non-toxic
- colourless and odourless
- non-flammable

ADBLUE® AVAILABILITY:

- You can use the express service to have AdBlue® topped up at a qualified specialist workshop, e.g.a Mercedes-Benz Service Centre.
- AdBlue® is available at numerous filling stations from AdBlue® filling pumps.
- Alternatively, AdBlue® is available at qualified specialist workshops, e.g. a Mercedes-Benz Service Centre, and at numerous filling stations as an AdBlue® refill canister or AdBlue® refill bottle.

AdBlue® freezes at a temperature of approximately -11°C. The vehicle is equipped with an AdBlue® preheating system ex factory. This means that winter operation is also ensured at temperatures below -11°C. If you top up AdBlue® at temperatures below -11°C, the AdBlue® level in the instrument cluster may not be displayed correctly. If the AdBlue® is frozen, drive for at least 20 minutes and then park the vehicle for a minimum of 30 seconds, so that the level is correctly displayed. In extreme winter conditions, the time needed to detect the amount topped up may be considerably longer. Park the vehicle in a warm garage to speed up this process.

When using refill containers, ensure a non-drip connection to the vehicle filler neck.

CALLING UP THE ADBLUE® FILL LEVEL DISPLAY

On-board computer:

Service

- Select AdBlue and confirm.

  The AdBlue® fill level appears.

TOPPING UP ADBLUE®

NOTE

Engine damage due to AdBlue® being in the fuel

- AdBlue® must not be used to fill the fuel tank.
- Only use AdBlue® to fill the AdBlue® tank.
- Do not overfill the AdBlue® tank.

NOTE

Contamination of the vehicle interior due to AdBlue® leakage

- After topping up, carefully close the AdBlue® refill container.
- Avoid carrying AdBlue® refill containers permanently in the vehicle.

Requirements

- The vehicle is switched off.

VEHICLES WITH PASSENGER VEHICLE APPROVAL: THE FOLLOWING MESSAGES THAT APPEAR IN SUCCESSION ON THE INSTRUMENT CLUSTER DISPLAY INDICATE THAT YOU NEED TO TOP UP THE ADBLUE® TANK:

- Top up AdBlue See Owner's Manual

  The AdBlue® container level has dropped to the reserve level.
- Top up AdBlue Limp mode in XXX km See Owner's Manual

  You will only be able to drive the vehicle for the distance shown. Top up AdBlue® as soon as possible.

- Top up XX,X l AdBlue Limp mode: max. XXX km/h No start in XXX km

  The vehicle speed is limited to approximately 20 km/h. You will only be able to drive the vehicle for the distance shown. After that, it will no longer be possible to start the vehicle.
- Top up AdBlue Engine start not possible

  The vehicle can no longer be started.

VEHICLES WITH COMMERCIAL VEHICLE APPROVAL: THE FOLLOWING MESSAGES THAT APPEAR IN SUCCESSION ON THE INSTRUMENT CLUSTER DISPLAY INDICATE THAT YOU NEED TO TOP UP THE ADBLUE® TANK:

- Top up AdBlue See Owner's Manual

  The AdBlue® container level has dropped to the reserve level.
- Top up AdBlue Performance reduced
- Top up AdBlue Limp-home mode after restart: max. XXX km/h

  The vehicle cannot be driven at a speed exceeding 20 km/h after the vehicle has been restarted.
- Top up AdBlue Limp-home mode: max. XXX km/h

  The vehicle cannot be driven at a speed exceeding 20 km/h.

TOP-UP QUANTITY:

With a prompt on the display	min. 8 l
Without a prompt on the display	min. 2 l

You can also have the AdBlue® level displayed (→ page 356).

OPENING THE ADBLUE® FUEL FILLER CAP

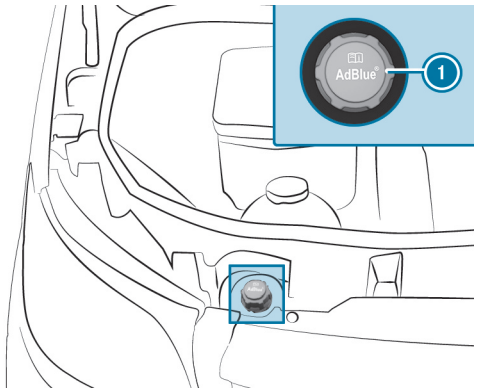

- Open the bonnet.
- Turn AdBlue® filler cap (1) anti-clockwise and remove it.

PREPARING THE ADBLUE® REFILL CANISTER

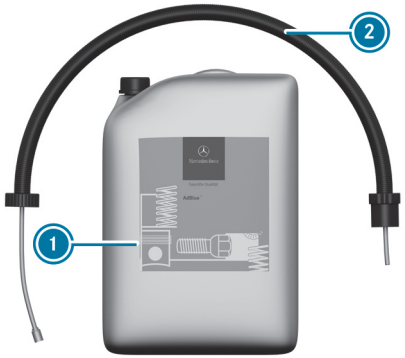

Variant 1

Variant 2

- Unscrew the cap on AdBlue® refill canister (1).
- Screw disposable hose (2) onto the opening of AdBlue® refill canister (1) until hand-tight.

TOPPING UP ADBLUE®

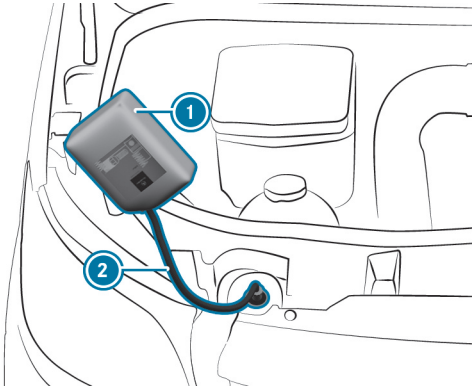

Variant 1

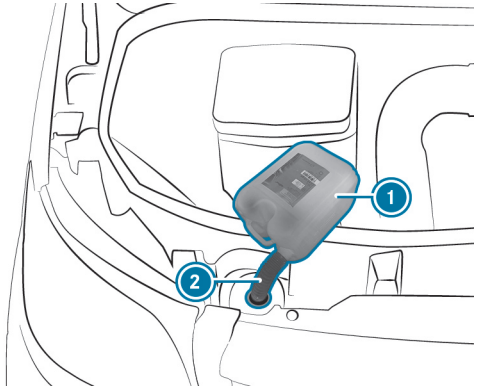

Variant 2

- Screw on hand-tight (variant 1) or insert (variant 2) disposable hose (2) into the filler neck of the vehicle.
- Lift up and tip AdBlue® refill canister (1).

  The filling process stops when the AdBlue® container is completely full.

  AdBlue® refill canister (1) can be removed when it has been only partially emptied.
- Unscrew disposable hose (2) and close AdBlue® and refill canister (1) in reverse order.
- Switch on the vehicle for at least 60 seconds.
- Start the vehicle.

ⓘ Avoid carrying AdBlue® refill containers permanently in the vehicle.

ADBLUE® REFILL BOTTLE

Only screw the AdBlue® refill bottle hand-tight onto the filler opening in the engine compartment. It may otherwise be damaged.

AdBlue® refill bottles (1) can be obtained at many filling stations or at a qualified specialist workshop. Refill bottles without a threaded cap offer no overfill protection. AdBlue® may leak out as a result of overfilling. Mercedes-Benz offers special refill bottles with a threaded cap. You can obtain these from a Mercedes-Benz Service Centre.

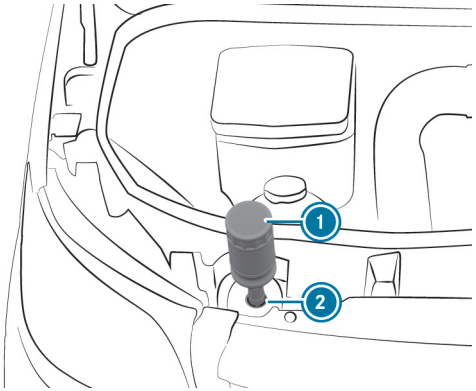

- Unscrew the protective cap from AdBlue® refill bottle (1).
- Place AdBlue® refill bottle (1) as shown on filler opening (2) and screw it on clockwise until hand-tight.
- Press AdBlue® refill bottle (1) towards filler opening (2).

  The AdBlue® tank is filled. This could take up to one minute.

> ⓘ When the AdBlue® refill bottle is no longer pressed down, filling stops. The bottle can be removed when it has been only partially emptied.

- Let go of AdBlue® refill bottle (1).
- Turn AdBlue® refill bottle (1) anti-clockwise and remove it.
- Screw the protective cap onto AdBlue® refill bottle (1) again.

FILLING PROCEDURE WITH THE PUMP NOZZLE OF AN ADBLUE® FILLING PUMP

- Insert the pump nozzle into the filler neck and top up with AdBlue®. When doing so, do not overfill the AdBlue® tank. You can also use an AdBlue® filling pump for trucks.

CLOSING THE ADBLUE® FUEL FILLER CAP

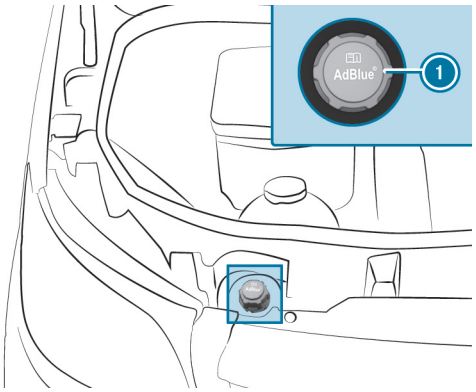

- After filling the AdBlue® tank, place AdBlue® filler cap (1) on the filler neck and tighten by turning it clockwise.
- Turn the AdBlue® fuel filler cap until the lettering is horizontal and can be read.
  The filler neck is only locked correctly when this is the case.
- Close the bonnet.

Parking

Parking the vehicle

WARNING
Risk of fire caused by hot exhaust system parts

Flammable materials such as leaves, grass or twigs may ignite.

- ► Park the vehicle so that no flammable material can come into contact with hot vehicle components.
- ► In particular, do not park on dry grassland or harvested grain fields.

WARNING
Accident– and risk of injury with unsupervised children in the vehicle

IF YOU LEAVE CHILDREN UNATTENDED IN THE VEHICLE, THEY CAN IN PARTICULAR

- Open doors and thereby endanger other persons or road users.
- get out of the car and are hit by traffic.
- Operate vehicle equipment and become trapped, forexample.

IN ADDITION, THE CHILDREN COULD ALSO SET THE VEHICLE IN MOTION, FOR EXAMPLEBY:

- releasing the parking brake.
- change the gearbox setting.
- start the vehicle.

- ► Never leave children unattended in the vehicle.
- ► When leaving the vehicle, always take the SmartKey with you and lock the vehicle.
- ► Keep the key out of reach of children.

DANGER
Danger to life from toxic exhaust gas in enclosed spaces

Combustion engines emit toxic exhaust gases suchas carbon monoxide. Inhaling these exhaust gases is hazardous to health and leads to poisoning.

- Never leave the engine or, if present, the stationary heater running in an enclosed space without sufficient ventilation.

WARNING
Risk of fire due to flammable materials in the engine compartment or on the exhaust system

Flammable materials may ignite.

- Therefore, regularly check that there are no flammable foreign materials in the engine compartment or on the exhaust system.

WARNING
Risk of accident and injury caused by an insufficiently secured vehicle rolling away

If the vehicle is not securely parked sufficiently, it can roll away in an uncontrolled way even at a slight downhill gradient.

- On uphill or downhill gradients, turn the front wheels so that the vehicle rolls towards the kerb if it starts moving.
- apply the parking brake.
- Vehicles with automatic transmission: shift the transmission to position P.
- Vehicles with manual transmission: engage first 1 or reverse gear R.

NOTE
Damage to the vehicle or the drivetrain due to rolling away

- Always park your vehicle safely and according to legal requirements.
- Always properly secure the vehicle against rolling away.

WARNING
Risk of accident and injury if the parking brake is not applied.

The vehicle can roll away if the parking brake is not applied and you park the vehicle with the park position P engaged.

The engaged park position P is not a full substitute for the parking brake.

There is a risk of accident and injury.

- Secure the vehicle against rolling away as described below.

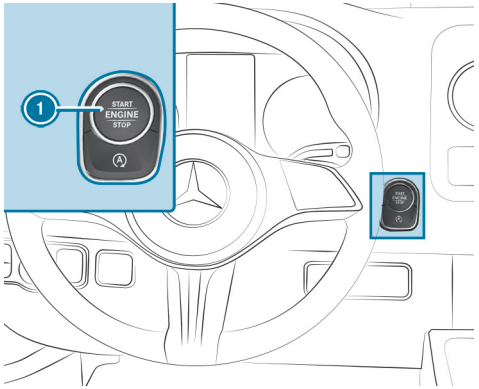

To correctly secure the vehicle against accidentally rolling away, observe the following points.

- Always apply the parking brake.
- **On gradients:** turn the front wheels towards the kerb.
- **Vehicles with manual transmissions:** engage first or reverse gear.
- **Vehicles with automatic transmission:** shift to transmission position P.
- Switch off the vehicle by pressing button 1.
- Get out of the vehicle and lock it.
- **On gradients:** secure the wheels on the rear axle with a chock or an object without any sharp edges (→ page 370).

Manual parking brake

APPLYING/RELEASING THE PARKING BRAKE LEVER

WARNING
Risk of skidding or an accident by braking with the parking brake

If you have to brake your vehicle with the parking brake, the braking distance is considerably longer and the wheels may lock. There is an increased risk of skidding and/or accident.

- Only brake the vehicle with the parking brake if the service brake has failed.
- In this case, do not apply the parking brake with too much force.
- If the wheels lock, immediately release the parking brake as much as required for the wheels to turn again.

WARNING
Risk of fire and an accident if the parking brake is not released

IF THE PARKING BRAKE IS NOT FULLY RELEASED WHEN DRIVING, THE FOLLOWING SITUATIONS CAN OCCUR:

- the parking brake can overheat and cause a fire
- the parking brake can lose its holding function

▶ Completely release the parking brake before driving off.

The brake lights do not light up when you brake the vehicle with the parking brake.

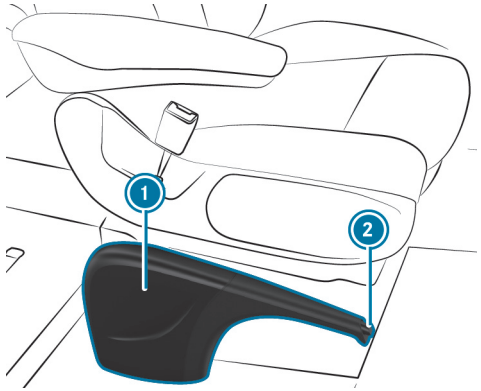

Generally, you may only apply the parking brake when the vehicle is stationary.

▶ **To apply the parking brake:** pull parking brake lever (1) up as far as the last possible detent.

When the vehicle has been started, the [(P)] indicator lamp in the instrument cluster lights up. If the vehicle is in motion, a warning tone sounds.

ⓘ In vehicles with a folding parking brake lever, you can then press parking brake lever (1) down as far as it will go.

RELEASING THE PARKING BRAKE

▶ **Folding parking brake lever:** first pull parking brake lever (1) upwards as far as it will go.

▶ Slightly pull parking brake lever (1) upwards and press release button (2).

▶ Lower parking brake lever (1) as far as it will go while pressing release button (2).

The [(P)] indicator lamp on the instrument cluster will go out.

FOLDING THE PARKING BRAKE LEVER UP OR DOWN

Requirements:

- The parking brake lever is engaged.

▶ **To fold down:** push the parking brake lever down as far as it will go.

▶ **To fold up:** pull the parking brake lever upwards as far as it will go.

PERFORMING EMERGENCY BRAKING WITH THE PARKING BRAKE LEVER

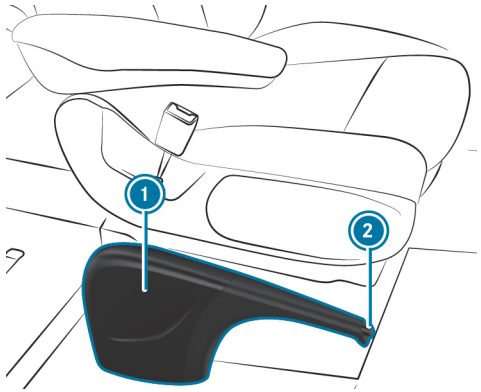

If, in exceptional cases, the service brake fails, you can use the parking brake to perform emergency braking.

► **Emergency braking:** press and hold release button (2) and carefully pull parking brake lever (1).

Electric parking brake

INFORMATION ON THE ELECTRIC PARKING BRAKE

⚠ **WARNING**
Accident- and risk of injury with unsupervised children in the vehicle

IF YOU LEAVE CHILDREN UNATTENDED IN THE VEHICLE, THEY CAN IN PARTICULAR

- Open doors and thereby endanger other persons or road users.
- get out of the car and are hit by traffic.
- Operate vehicle equipment and become trapped, forexample.

IN ADDITION, THE CHILDREN COULD ALSO SET THE VEHICLE IN MOTION, FOR EXAMPLEBY:

- releasing the parking brake.
- change the gearbox setting.
- start the vehicle.

► Never leave children unattended in the vehicle.

► When leaving the vehicle, always take the SmartKey with you and lock the vehicle.

► Keep the key out of reach of children.

Observe the note on transporting animals in the vehicle (⟶ page 145).

For the automatic functions to work correctly, the driver must be seated in the correct seat position (⟶ page 213).

The function of the electric parking brake is dependent on the on-board electrical system voltage. If the on-board electrical system voltage is low or there is a malfunction in the system, the electric parking brake may not be able to be applied. In this case, the yellow [(P)] indicator lamp lights up.

IN THIS CASE, PARK THE VEHICLE IN THE FOLLOWING WAY:

- Park the vehicle on level ground and secure it to prevent it from rolling away.
- **Vehicles with automatic transmission:** shift the transmission to position [P].
- **Vehicles with manual transmission:** engage first gear.

ⓘ The electric parking brake is only actually applied when the red [(P)] indicator lamp lights up continuously.

It may not be possible to release a parking brake if the on-board electrical system voltage is low or if there is a malfunction in the system. Inform a qualified specialist workshop.

When the vehicle is stationary, the electric parking brake carries out a function test at regular intervals. Noises are normal in this process.

The automatic application of the parking brake only works after a previous journey.

FUNCTION OF THE ELECTRIC PARKING BRAKE
Vehicles with automatic transmission:

When the vehicle is switched off after a journey and the transmission is in position [P], the electric parking brake is automatically applied.

IN ADDITION, AT LEAST ONE OF THE FOLLOWING CONDITIONS MUST BE FULFILLED:

- The driver is not sitting in the driver's seat.
- the seat belt buckle is undone.

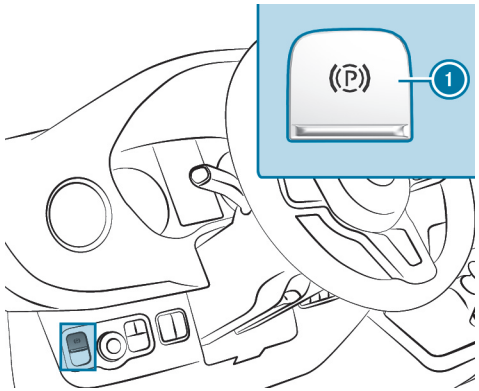

The electric parking brake is also automatically applied if Active Distance Assist DISTRONIC has brought the vehicle to a standstill and the driver is not sitting in the driver's seat.

THE ELECTRIC PARKING BRAKE IS ALSO APPLIED WHEN THE TRANSMISSION IS NOT IN POSITION [P], BUT THE FOLLOWING SITUATIONS OCCUR:

- There is a system malfunction.
- The power supply is insufficient.
- The vehicle has been stationary for a longer time.

The red [(P)] indicator lamp on the instrument cluster lights up. The electric parking brake is only actually applied when the red [(P)] indicator lamp lights up continuously.

ⓘ To prevent the electric parking brake from applying automatically, pull switch ①.

Vehicles with manual transmission:

WHEN THE VEHICLE IS STATIONARY AFTER A JOURNEY AND IT IS SWITCHED OFF, THE ELECTRIC PARKING BRAKE IS AUTOMATICALLY APPLIED IF AT LEAST ONE OF THE FOLLOWING CONDITIONS HAS BEEN FULFILLED:

- the driver leaves the driver's seat.
- the seat belt buckle is undone.

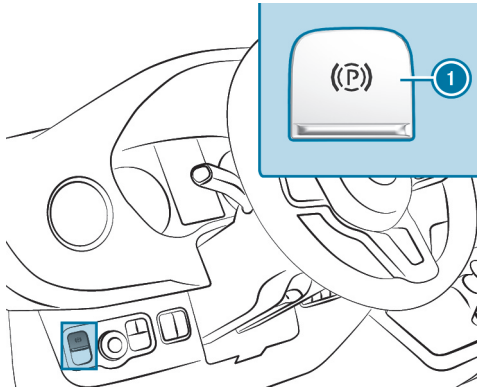

ⓘ To prevent the electric parking brake from applying automatically, pull switch ①.

RELEASING THE ELECTRIC PARKING BRAKE AUTOMATICALLY

⚠ **WARNING**
Accident– and risk of injury with unsupervised children in the vehicle

IF YOU LEAVE CHILDREN UNATTENDED IN THE VEHICLE, THEY CAN IN PARTICULAR

- Open doors and thereby endanger other persons or road users.
- get out of the car and are hit by traffic.
- Operate vehicle equipment and become trapped, forexample.

IN ADDITION, THE CHILDREN COULD ALSO SET THE VEHICLE IN MOTION, FOR EXAMPLEBY:

- releasing the parking brake.
- change the gearbox setting.
- start the vehicle.

▶ Never leave children unattended in the vehicle.

▶ When leaving the vehicle, always take the SmartKey with you and lock the vehicle.

▶ Keep the key out of reach of children.

Vehicles with automatic transmission:

THE ELECTRIC PARKING BRAKE OF YOUR VEHICLE IS RELEASED WHEN ALL OF THE FOLLOWING CONDITIONS ARE FULFILLED:

- The driver is sitting in the driver's seat.
- The driver is belted.

- The vehicle has been started.
- Transmission position D or R is engaged and you operate the accelerator.

  or

  You shift from transmission position P to position D or R. You must also depress the accelerator if travelling on steep uphill gradients.
- If transmission position R is engaged, the rear doors must be closed.

Vehicles with manual transmission:

THE ELECTRIC PARKING BRAKE OF YOUR VEHICLE IS RELEASED WHEN ALL OF THE FOLLOWING CONDITIONS ARE FULFILLED:

- The driver is sitting in the driver's seat.
- The driver is belted.
- The vehicle has been started.
- A gear is engaged.
- You release the clutch pedal and depress the accelerator pedal at the same time.
- When reverse gear is selected, the rear-end doors must be closed.

APPLYING/RELEASING THE ELECTRIC PARKING BRAKE MANUALLY

⚠ **WARNING**
Accident– and risk of injury with unsupervised children in the vehicle

IF YOU LEAVE CHILDREN UNATTENDED IN THE VEHICLE, THEY CAN IN PARTICULAR

- Open doors and thereby endanger other persons or road users.
- get out of the car and are hit by traffic.
- Operate vehicle equipment and become trapped, forexample.

IN ADDITION, THE CHILDREN COULD ALSO SET THE VEHICLE IN MOTION, FOR EXAMPLEBY:

- releasing the parking brake.
- change the gearbox setting.
- start the vehicle.

▶ Never leave children unattended in the vehicle.

▶ When leaving the vehicle, always take the SmartKey with you and lock the vehicle.

▶ Keep the key out of reach of children.

- Observe "Notes on pets in the vehicle" (→ page 145).

▶ **To apply:** press the (P) switch when the vehicle is stationary.

When the electric parking brake is applied, the red (P) indicator lamp lights up in the instrument cluster. The electric parking brake is only actually applied when the red (P) indicator lamp lights up continuously.

It is also possible to apply the electric parking brake when the vehicle is switched off.

► **To release:** pull the [(P)] switch.

The red [(P)] indicator lamp in the instrument cluster goes out.

You may only release the electric parking brake if the vehicle is switched on with the start/stop button.

EMERGENCY BRAKING

In the event of an emergency, you can brake the vehicle while it is in motion with the electric parking brake.

► While driving, press switch [(P)] of the electric parking brake.

The vehicle is braked as long as you keep switch [(P)] of the electric parking brake depressed.

The vehicle's brake lights light up.

The longer switch [(P)] for the electric parking brake is depressed, the greater the braking force.

DURING THE BRAKING PROCEDURE, YOU WILL RECEIVE THE FOLLOWING FEEDBACK FROM THE VEHICLE:

- A warning tone will sound.
- The Release parking brake message appears in the instrument cluster.
- The red [(P)] indicator lamp flashes in the instrument cluster.

When the vehicle has been braked to a standstill, the electric parking brake is applied.

Temporarily storing the vehicle

NOTE

Damage to the starter battery due to leaving the vehicle idle for extended periods of time

If the vehicle is not moved for a longer period, quiescent current can lead to excessive discharge of the starter battery and cause battery damage.

► Charge the starter battery if the voltage is below 12.2 V, for example, after driving for an extended period.

► Charge the starter battery every six months, even if it has been disconnected or is in standby mode.

► Check the starter battery charge level every four weeks if no trickle charger is being used.

► If possible, connect a trickle charger via a jump-start connection point.

► Consult a qualified specialist workshop to disconnect the battery or if you have any questions.

TEMPORARILY STORING THE VEHICLE FOR OVER FOUR WEEKS

► **Method 1:** connect the starter battery to a trickle charger via the jump-start connection.

► **Method 2:** interrupt the power supply by activating standby mode (→ page 370).

► **Method 3:** disconnect all batteries. For this, please contact a qualified specialist workshop.

Standby mode

FUNCTION OF STANDBY MODE

If standby mode is activated, energy loss is minimised during extended non-operational periods.

STANDBY MODE IS CHARACTERISED BY THE FOLLOWING:

- The starter battery is preserved.
- The maximum non-operational time appears in the instrument cluster.
- The connection to online services is interrupted.
- The ATA (anti-theft alarm system) is unavailable.
- The interior protection and tow-away protection functions are not available.

IF THE FOLLOWING CONDITIONS ARE MET, STANDBY MODE CAN BE ACTIVATED OR DEACTIVATED VIA THE MULTIMEDIA SYSTEM:

- The vehicle is switched on.
- The vehicle has not been started.

Exceeding the vehicle's displayed non-operational time may cause inconvenience; i.e. it cannot be guaranteed that the starter battery will reliably start the vehicle.

CHARGE THE STARTER BATTERY IN THE FOLLOWING SITUATIONS:

- You want to extend the vehicle's non-operational time.
- The state of charge of the starter battery is not sufficient for standby mode.

ⓘ Standby mode is automatically deactivated when the vehicle is switched on.

ACTIVATING/DEACTIVATING STANDBY MODE (LAYING UP VEHICLE)

Requirements

- The vehicle is switched on.
- The vehicle has not been started.

Multimedia system:

⟶ ⌂ ▸▸ Settings ▸▸ Vehicle ▸▸ Other functions

▸ Activating/deactivating Standby mode.

Using the chock

Use the chock to provide additional safety to prevent the vehicle from rolling away, e.g. when parking or changing a wheel.

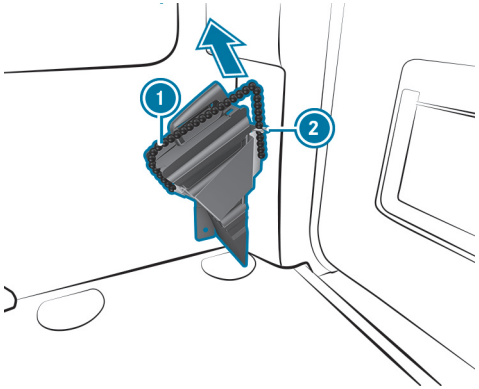

Chock in load/passenger compartment

- **To remove the chock:** pull holding rope (1) slightly downwards and then remove it from bracket (2).
- Remove the chock.

ⓘ When stowing it away, ensure that the chock is secured in the bracket by holding rope (1).

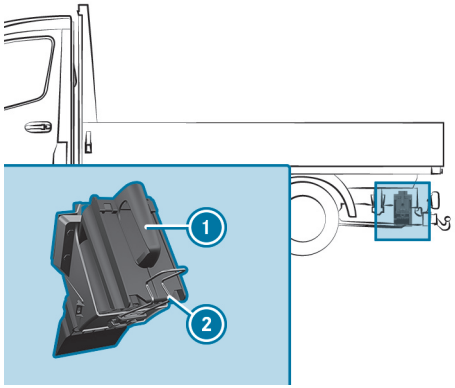

Chock at rear of chassis on left side of vehicle (example)

- **To remove the chock on platform vehicles:** pull safety spring (2) downwards and remove chock (1).

ⓘ When stowing it away, ensure that the chock is secured in the bracket by the safety spring.

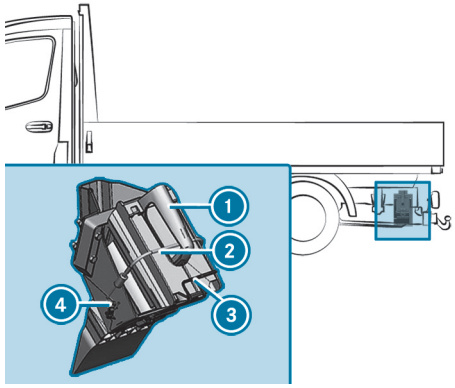

Chock at rear of chassis on left side of vehicle (example: front-wheel drive vehicle)

- **To remove the chock:** remove rubber strap (2) from hook (4).
- Pull safety spring (3) downwards and remove chock (1).

ⓘ When stowing it away, ensure that the chock is secured in the bracket by the safety spring.

Driving and driving safety systems

Notes on driving systems and your responsibility

Your vehicle is equipped with driving systems which assist you in driving, parking and manoeuvring the vehicle. The driving systems serve solely as aids. They are not a substitute for you having to pay attention to your surroundings and do not relieve you of your responsibility to adhere to road traffic law. The driver is always responsible for maintaining a safe distance to the vehicle in front, for vehicle speed, braking in good time and for staying in the lane. Pay attention to the traffic conditions at all times and intervene as necessary. Be aware of the limitations regarding safe use of these systems.

Driving systems can neither reduce the risk of an accident if you fail to adapt your driving style, nor override the laws of physics. They cannot always take into account road, weather or traffic conditions.

ⓘ Some driving systems can regulate or limit the speed to a previously set value. Ensure that the new driver is aware of the stored speed when changing drivers.

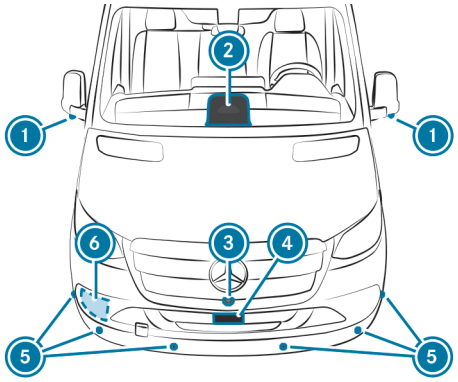

Front view (example)

1. Cameras in the outside mirrors
2. Multifunction camera
3. Front camera
4. Front radar
5. Ultrasonic sensors
6. Front radar for Sideguard Assist on front passenger side

Information on vehicle sensors and cameras

Some driving systems and driving safety systems use cameras and radar or ultrasonic sensors to monitor the area in front of, behind or next to the vehicle.

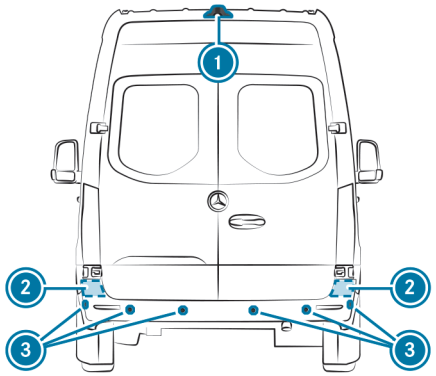

Rear view (example)

1. Reversing camera
2. Rear radar
3. Ultrasonic sensors

WARNING
Risk of accident if the detection capability of the vehicle sensors or cameras is impaired

If the areas of the vehicle sensors or cameras are obscured, damaged or dirty, some driving and driving safety systems may no longer function correctly. There is a risk of an accident.

- Always keep the areas of the vehicle sensors and cameras clear of obstructions and clean.
- Have damage to the bumpers, radiator grille or stone chipping in the area of the cameras in the windscreen repaired at a qualified specialist workshop.

Keep the areas of the cameras and sensors in particular free of dirt, ice and slush (→ page 624). The sensors and cameras must not be covered, and the detection ranges around them must be kept free. Do not attach additional licence plate brackets, advertisements, stickers, car films or stone chip protection foils in the detection range of the sensors and cameras. Make sure that there are no overhanging loads protruding into the detection range.

In the event of damage, or following a severe impact, have the function of the sensors checked at a qualified specialist workshop. Have damage or stone chips in the area of the cameras repaired at a qualified specialist workshop.

Overview of driving systems and driving safety systems

IN THIS SECTION, YOU WILL FIND INFORMATION ABOUT THE FOLLOWING DRIVING SYSTEMS AND DRIVING SAFETY SYSTEMS:

- ABS (**A**nti-lock **B**raking **S**ystem) (→ page 374)
- BAS (**B**rake **A**ssist **S**ystem) (→ page 375)
- ASR (**A**nti-**S**lip **C**ontrol) (→ page 375)
- EBD (**E**lectronic **B**rakeforce **D**istribution) (→ page 378)
- ESP® (**E**lectronic **S**tability **P**rogram) (→ page 375)
- ESP® Crosswind Assist (→ page 377)
- ESP® Trailer Stability Assist (→ page 377)
- Adaptive brake lights (→ page 381)
- Active Brake Assist (→ page 378)
- WSC (**W**orking **S**peed **C**ontrol) (→ page 439)
- Hill Start Assist (→ page 405)
- HOLD function (→ page 406)

- DSR (**D**ownhill **S**peed **R**egulation) (→ page 386)
- Cruise control (→ page 382) and limiter (→ page 382)
- Active Distance Assist DISTRONIC (→ page 388)
- Speed Limit Assist (→ page 401)
- Active Lane Keeping Assist (→ page 434)
- Blind Spot Assist (→ page 429)
- Sideguard Assist(→ page 431)
- Moving-off Information Assist (→ page 433)
- ATTENTION ASSIST (→ page 420)
- Traffic Sign Assist (→ page 422)
- Drive Away Assist (→ page 426)
- Parking Assist PARKTRONIC (→ page 407)
- 360° camera (→ page 414)
- Close-range braking(→ page 427)
- Rear Cross Traffic Alert (→ page 428)
- Reversing camera (→ page 410)

ⓘ The availability of individual functions depends on country and equipment.

DRIVING ASSISTANCE PACKAGE

ⓘ The following functions are part of the Driving Assistance Package. Some functions are only available depending on the country. Some functions are also available with restricted functionality without the Driving Assistance Package.

- Active Distance Assist DISTRONIC (→ page 388)
- Active Speed Limit Assist (→ page 395)
- Route-based speed adaptation (→ page 396)
- Active Steering Assist (→ page 398)
- Active Emergency Stop Assist (→ page 400)

Functions of ABS (Anti-lock Braking System)

Observe the important safety guidelines for the driving safety system.

ABS CONTROLS THE BRAKE PRESSURE IN CRITICAL SITUATIONS:

- During braking, for instance, at maximum full-stop braking or if there is insufficient tyre traction, the wheels are prevented from locking.
- The steerability of the vehicle in terms of physical possibilities is ensured when braking.
- ABS is active from speeds of approx. 5 km/h. On a slippery road surface, ABS intervenes even if you only brake gently.

SYSTEM LIMITS
ABS may be impaired or may not function if a malfunction has occurred and the yellow (ABS) ABS warning lamp lights up continuously in the instrument cluster after the vehicle is started.

If ABS intervenes, you will feel pulsations in the brake pedal. The pulsating brake pedal may be an indication of hazardous road conditions and functions as a reminder to take extra care while driving.

If ABS intervenes: keep the brake pedal firmly depressed until the braking situation has passed.

To carry out maximum full-stop braking: depress the brake pedal with full force.

Function of BAS (Brake Assist System)

WARNING
Risk of an accident caused by a malfunction in BAS (Brake Assist System)

If BAS is malfunctioning, the braking distance in an emergency braking situation is increased.

► Depress the brake pedal with full force in emergency braking situations. ABS prevents the wheels from locking.

BAS supports you with additional braking force in an emergency braking situation.

IF YOU DEPRESS THE BRAKE PEDAL QUICKLY, BAS IS ACTIVATED:

- BAS automatically boosts the braking force of the brakes
- BAS can shorten the braking distance
- ABS prevents the wheels from locking

When you release the brake pedal, the brakes function as usual again. BAS is deactivated.

Functions of ASR (acceleration skid control)

ASR can neither reduce the risk of an accident nor override the laws of physics if the driver does not pay attention when pulling away or accelerating. ASR is only an aid. Always adapt your driving style to suit the prevailing road and weather conditions.

ASR improves traction, i.e. the transfer of power from the tyres to the road surface, for a sustained period and therefore also improves the driving stability of the vehicle. If the drive axle wheels start to slip, ASR brakes individual wheels on the drive axle and limits the engine torque. ASR thus significantly assists you when pulling away and accelerating, especially on wet or slippery roads.

If traction on the road surface is not sufficient, even ASR will not allow you to pull away easily. The type of tyres and total weight of the vehicle, as well as the gradient of the road, also play a crucial role.

If ASR intervenes, the warning lamp in the instrument cluster flashes.

Function of ESP® (Electronic Stability Program)

CHARACTERISTICS WHEN ESP® IS ACTIVATED

ESP® CAN, WITHIN PHYSICAL LIMITS, MONITOR AND IMPROVE DRIVING STABILITY AND TRACTION IN THE FOLLOWING SITUATIONS:

- when driving and pulling away on wet or slippery road surfaces
- when braking

IF THE VEHICLE IS DEVIATING FROM THE DIRECTION DESIRED BY THE DRIVER, ESP® CAN INTERVENE AS FOLLOWS TO STABILISE THE VEHICLE:

- one or more wheels are braked
- the engine output is adapted according to the situation

ⓘ Only use the wheel/tyre combinations approved for your vehicle. Only then will ESP® function properly.

IF THE WARNING LAMP FLASHES, THEN ONE OR MORE WHEELS HAVE REACHED THEIR TRACTION LIMIT:

- adapt your driving style to suit the prevailing road and weather conditions
- do not deactivate ESP® under any circumstances
- only depress the accelerator pedal as far as is necessary when pulling away

If the warning lamp lights up continuously, ESP® is not available due to a malfunction.

OBSERVE THE FOLLOWING INFORMATION:

- Indicator and warning lamps (⟶ page 811)
- Display messages (⟶ page 761)

CHARACTERISTICS WHEN ESP® IS DEACTIVATED

⚠ **WARNING**
Risk of skidding if ESP® is deactivated

If you deactivate ESP®, ESP® cannot carry out vehicle stabilisation.

▶ ESP® should only be deactivated in the following situations.

When ESP® is deactivated, the warning lamp lights up continuously.

IF ESP® IS DEACTIVATED, TRACTION CAN BE IMPROVED IN THE FOLLOWING SITUATIONS:

- when using snow chains
- in deep snow
- on sand or gravel

ⓘ Spinning the wheels results in a cutting action, which enhances traction.

OBSERVE THE FOLLOWING POINTS WHEN ESP® IS DEACTIVATED:

- vehicle stabilisation is delayed and is significantly reduced in the lower speed range
- the drive wheels may start to spin
- traction control is still active

ⓘ If ESP® is deactivated, ESP® will still support you during braking.

Activating/deactivating ESP® (Electronic Stability Program)

Multimedia system:

Settings ▶▶ Assistance ▶▶ Collision avoidance ▶▶ ESP

ⓘ ESP® can be activated/deactivated using quick-access when at least one other function is available in quick-access. Otherwise, you can find ESP® in the Assistance menu.

▶ Select ESP.

Information about ESP® appears.

▶ Select On or Off.

If the ESP® OFF warning lamp lights up constantly in the instrument cluster, ESP® is deactivated.

Observe the information on warning lamps and display messages which may appear in the instrument cluster.

Function of ESP® Crosswind Assist

ESP® CROSSWIND ASSIST DETECTS SUDDEN GUSTS OF SIDE WIND AND HELPS THE DRIVER TO KEEP THE VEHICLE IN THE LANE:

- ESP® Crosswind Assist is active at vehicle speeds above approx. 80 km/h when driving straight ahead or cornering slightly.
- The vehicle is stabilised by means of individual brake intervention on one side. The instrument cluster displays a message with the traffic sign for a strong crosswind.

ESP® CROSSWIND ASSIST DOES NOT REACT UNDER THE FOLLOWING CONDITIONS:

- The vehicle is subjected to severe jolts and vibrations, e.g. as a result of bumps or potholes.
- The vehicle loses traction, e.g. on snow or ice or when aquaplaning.

Function of ESP® Trailer Stability Assist

⚠ **WARNING**
Risk of accident in poor road and weather conditions

In poor road and weather conditions, the trailer stabilisation cannot prevent lurching of the vehicle/trailer combination. Trailers with a high centre of gravity may tip over before ESP® detects this.

▶ Always adapt your driving style to suit the current road and weather conditions.

WHEN YOU ARE DRIVING WITH A TRAILER, ESP® TRAILER STABILITY ASSIST CAN STABILISE YOUR VEHICLE IF IT BEGINS TO SWERVE FROM SIDE TO SIDE:

- ESP® Trailer Stability Assist is active at speeds above approx. 65 km/h.
- Minor swerving is reduced by a targeted, individual brake intervention on one side.
- In the event of severe swerving, the drive output is also reduced and all wheels are braked.

ESP® TRAILER STABILITY ASSIST MAY BE RESTRICTED OR OUT OF OPERATION IN THE FOLLOWING CIRCUMSTANCE:

- The trailer is not correctly connected or is not correctly recognised by the vehicle.

Function of EBD (Electronic Brakeforce Distribution)

EBD HAS THE FOLLOWING CHARACTERISTICS:

- monitoring and controlling the braking force on the rear wheels
- improving driving stabilisation when braking, especially on bends

Function of Active Brake Assist

ACTIVE BRAKE ASSIST COMPRISES THE FOLLOWING FUNCTIONS:

- Distance warning function
- Autonomous braking function with collision warning
- Situation-dependent brake force boosting

From a speed of approx. 7 km/h, Active Brake Assist can help you to minimise the risk of a collision with vehicles, cyclists or pedestrians, or mitigate the consequences.

If Active Brake Assist has detected a risk of collision, a warning tone sounds and the warning lamp lights up on the instrument cluster display.

If you do not react to the collision warning, autonomous braking can be initiated in critical situations. In particularly critical situations, Active Brake Assist can initiate autonomous braking directly. In this case, the warning lamp and warning tone are activated simultaneously with the braking application.

If you apply the brake yourself in a situation detected as critical by Active Brake Assist, or apply the brake during autonomous braking, situation-dependent brake force boosting occurs. The brake pressure increases up to maximum full-stop braking if necessary.

If an autonomous brake application or situation-related brake force boosting is performed, pop-up 1 appears on the instrument cluster display. It automatically disappears after a short time.

WARNING
Risk of an accident caused by limited detection performance of Active Brake Assist

Active Brake Assist cannot always clearly identify objects and complex traffic situations.

IN SUCH CASES, ACTIVE BRAKE ASSIST MIGHT:

- Give a warning or brake without reason
- Not give a warning or not brake

Active Brake Assist is only an aid. The driver is responsible for maintaining a sufficiently safe distance to the vehicle in front, vehicle speed and for braking in good time.

► Always pay careful attention to the traffic situation; do not rely on Active Brake Assist alone.

► Be prepared to brake or swerve if necessary.

Observe the system limits of Active Brake Assist. Due to the nature of the system, complex but non-critical driving conditions may also cause Active Brake Assist to intervene during braking.

If Active Brake Assist has been deactivated manually or by another driving system, the OFF warning lamp lights up on the instrument cluster display.

If the system is not available owing to soiled or damaged sensors or a malfunction, the warning lamp lights up on the instrument cluster display.

DISTANCE WARNING FUNCTION

FROM A SPEED OF APPROX. 30 KM/H, THE DISTANCE WARNING FUNCTION GIVES A WARNING IF THE FOLLOWING CONDITIONS ARE MET:

- The difference in speed between the vehicle ahead and yours is a maximum of 30 km/h.
- The distance to the vehicle ahead is insufficient for the current speed.

In this case, the warning lamp lights up on the instrument cluster display. If the distance to the vehicle in front is further reduced at higher speeds, the warning lamp starts to flash.

You can set the timing of the distance warning to immediately after detection of the insufficient distance (early) or to when the distance has been insufficient for several seconds (medium, late) (⟶ page 381).

AUTONOMOUS BRAKING FUNCTION WITH COLLISION WARNING

THE AUTONOMOUS BRAKING FUNCTION MAY INTERVENE AT SPEEDS FROM APPROXIMATELY 7 KM/H IN THE FOLLOWING SITUATIONS:

- at speeds up to approx. 250 km/h for moving vehicles and cyclists ahead or pedestrians walking along the road
- at speeds up to approx. 80 km/h for stationary vehicles
- at speeds up to approx. 70 km/h for crossing vehicles, pedestrians and cyclists
- when making a turn across the oncoming lane, before you leave your own lane, up to approx. 20 km/h if there are vehicles, pedestrians or two-wheelers approaching

ⓘ The response is limited in the case of stationary pedestrians and cyclists.

At speeds up to approx. 70 km/h, Active Brake Assist only responds to oncoming vehicles in your own lane with autonomous braking just before a possible collision. This reduces the potential impact speed. It enables you to evade the oncoming vehicle in good time if this is safely possible.

SITUATION-DEPENDENT BRAKE FORCE BOOSTING

THE SITUATION-DEPENDENT BRAKE FORCE BOOSTING MAY INTERVENE AT SPEEDS STARTING FROM APPROXIMATELY 7 KM/H IN THE FOLLOWING SITUATIONS:

- at speeds up to approx. 250 km/h for moving vehicles and cyclists ahead or pedestrians walking along the road
- at speeds up to approx. 80 km/h for stationary vehicles
- at speeds up to approx. 70 km/h for crossing vehicles, pedestrians and cyclists

ⓘ The response is limited in the case of stationary pedestrians and cyclists.

INTERRUPTION OF A BRAKE APPLICATION BY ACTIVE BRAKE ASSIST

YOU CAN CANCEL A BRAKE APPLICATION BY ACTIVE BRAKE ASSIST AT ANY TIME BY:

- emphatically depressing the accelerator pedal or with kickdown
- releasing the brake pedal (only during situation-related brake force boosting)
- steering clear of the detected obstacle

If there is no longer a risk of collision or the obstacle ahead is no longer detected, Active Brake Assist automatically cancels the brake application.

TURNING MANOEUVRE FUNCTION

If the system detects a risk of collision with oncoming vehicles, pedestrians or two-wheelers when making a turn across the oncoming lane at speeds below approx. 20 km/h, an autonomous braking intervention may be initiated before you have left your own lane.

SYSTEM LIMITS

Full system performance is not yet available for a few seconds after switching on the vehicle or after moving off. Depending on the surrounding conditions it may take several minutes for the full system performance to be available.

THE SYSTEM MAY BE IMPAIRED OR MAY NOT FUNCTION IN THE FOLLOWING SITUATIONS:

- in snow, rain, fog, heavy spray, glare, direct sunlight or changing light conditions
- if the sensors are soiled, misted up, damaged or covered
- if the sensors are impaired owing to interference from other radar sources, e.g. strong radar reflections in multi-storey car parks
- if a loss of tyre pressure or a defective tyre has been detected and indicated
- if DSR is activated
- in complex traffic situations where objects cannot always be clearly identified
- if pedestrians or vehicles move quickly into the sensor detection range
- if pedestrians are hidden by other objects
- if the typical outline of a pedestrian cannot be distinguished from the background
- if a pedestrian is not detected as such, e.g. owing to special clothing or other objects

- on narrow bends

Setting Active Brake Assist

Requirements:

- The vehicle is switched on.

Multimedia system:

Settings ▶▶ Assistance ▶▶ Collision avoidance ▶▶ Active Brake Assist

THE FOLLOWING SETTINGS ARE AVAILABLE:

- Early
- Medium
- Late
- Off

ⓘ It is recommended that Active Brake Assist always be left activated.

▶ Select a setting.

The last active setting is selected automatically each time the vehicle is started.

Exception: if the last setting was Off, the Medium setting will be automatically activated the next time the vehicle is started.

DEACTIVATING ACTIVE BRAKE ASSIST

ⓘ It is recommended that Active Brake Assist always be left activated.

▶ Select Off.

The distance warning function and autonomous braking function can only be switched off when stationary and at speeds up to 10 km/h.

ⓘ If Active Brake Assist is switched off, Emergency Stop Assist and the distance warning function are also deactivated.

When the vehicle is next started, the Medium setting will be activated automatically.

ⓘ If Active Brake Assist is deactivated, the OFF symbol appears on the status bar of the instrument cluster.

Function of Adaptive Brake Lights

ADAPTIVE BRAKE LIGHTS WARN FOLLOWING TRAFFIC IN AN EMERGENCY BRAKING SITUATION WITH THE FOLLOWING SIGNALS:

- By flashing the brake lamps
- By activating the hazard warning lights

If the vehicle is braked sharply from speeds above 50 km/h, the brake lamps flash rapidly. This provides traffic travelling behind you with an even more noticeable warning.

If the vehicle is travelling at speeds of more than 70 km/h at the beginning of the brake application, the hazard warning lights switch on once the vehicle is stationary. When pulling away again, the hazard warning lights switch off automatically at approx. 10 km/h.

You can also switch off the hazard warning lights using the hazard warning button (→ page 63).

Cruise control and limiter

FUNCTION OF CRUISE CONTROL
Cruise control regulates the speed to the value selected by the driver.

If you accelerate to overtake, forexample, the stored speed is not deleted. If you remove your foot from the accelerator pedal after overtaking, cruise control will resume speed regulation back to the stored speed.

You can store any speed above 20 km/h up to the maximum design speed or up to the stored winter tyre limit.

Observe the information on driving systems and be aware of your personal responsibility, otherwise you may fail to recognise potential dangers (→ page 372).

NOTIFICATIONS ON THE INSTRUMENT CLUSTER DISPLAY

Grey: cruise control is selected but not yet active or temporarily in passive mode.

Green: cruise control is activated.

A stored speed is shown alongside the display and is indicated in the speedometer.

SYSTEM LIMITS
Cruise control may be unable to maintain the stored speed on uphill gradients. The stored speed is resumed when the uphill gradient evens out and the vehicle's speed does not fall below 20 km/h.

On long and steep downhill gradients, you must shift down to a lower gear in good time. This is particularly important when driving a heavily-laden vehicle. You are thus making full use of the engine's braking effect. This will take some of the strain off the brake system and prevent the brakes from overheating and wearing too quickly.

DO NOT USE CRUISE CONTROL IN THE FOLLOWING SITUATIONS:

- in traffic situations which require frequent changes of speed, e.g. in heavy traffic, on winding roads
- off-road or on construction sites
- on slippery or slick roads, as the drive wheels can lose traction when accelerating and the vehicle can then begin skidding
- if there is poor visibility

FUNCTION OF THE LIMITER

VEHICLES WITH UP TO 3.5 T PERMISSIBLE GROSS MASS:
The limiter restricts the speed of the vehicle. To reduce the speed to the stored speed, the limiter applies the brakes automatically.

VEHICLES WITH UP TO 3.5 T PERMISSIBLE GROSS MASS:
The limiter restricts the speed of the vehicle. The vehicle is not braked by the limiter.

YOU CAN LIMIT THE SPEED AS FOLLOWS:

- **Variable:** for short-term limitation of the travel speed, e.g. in built-up areas

- **Permanent:** for a longer-term speed restriction, e.g. in winter tyre mode

You can set any speed above 20 km/h. You can also perform settings while the vehicle is stationary once the vehicle has been started.

Observe the notes on driving systems and your responsibility. You may otherwise fail to recognise potential dangers.(→ page 372)

NOTIFICATIONS ON THE INSTRUMENT CLUSTER DISPLAY

LIM **Grey:** variable limiter is selected but not yet activated.

LIM **Flashing grey:** variable limiter is temporarily in passive mode.

LIM **Green:** variable limiter is activated.

A stored speed is shown under the display LIM. In vehicles with Active Distance Assist DISTRONIC, the segments up to the current stored speed also light up in the speedometer.

KICKDOWN

If you depress the accelerator pedal beyond the pressure point (kickdown), the variable limiter switches to passive mode.

If you exceed the set speed by more than 3 km/h, the indicator LIM flashes in the display and the Limiter Set speed exceeded message appears.

THE VARIABLE LIMITER IS REACTIVATED IN THE FOLLOWING SITUATIONS:

- If the travel speed drops below the stored speed.
- If the stored speed is called up.
- If you store a new speed.

OPERATING CRUISE CONTROL OR THE VARIABLE LIMITER

> ⚠ **WARNING**
> Risk of accident due to stored speed
>
> If you call up the stored speed and this is lower than your current speed, the vehicle decelerates.
>
> ► Take into account the traffic situation before calling up the stored speed.

Requirements

CRUISE CONTROL

- **Vehicles with automatic transmission:** the transmission is in position D.
- **Vehicles with manual transmission:** the clutch pedal is not depressed.
- The travel speed is at least 20 km/h.
- ESP® is activated, but not intervening.
- Cruise control is selected.

VARIABLE LIMITER

- The variable limiter is selected.

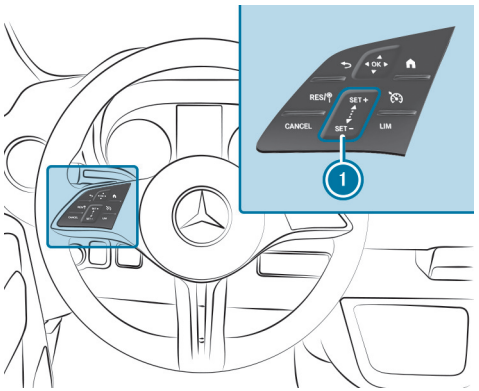

Steering wheel control panel for cruise control and variable limiter

RES/	Adopts the stored/detected speed
CANCEL	Deactivates cruise control/the variable limiter
1 SET + SET -	Control panel to increase/decrease speed
	Selects cruise control
LIM	Selects the variable limiter

Operating cruise control and the variable limiter

- Press the corresponding button with only one finger or swipe across the control panel.

SWITCHING BETWEEN CRUISE CONTROL AND THE VARIABLE LIMITER

- **To select cruise control:** press .
- **To select the variable limiter:** press LIM.

ⓘ Vehicles with Active Distance Assist DISTRONIC: the variable limiter is selected using a different button (→ page 392).

ACTIVATING CRUISE CONTROL OR THE VARIABLE LIMITER

- Press SET + or SET - on the control panel 1.

  The current travel speed is stored and maintained by the vehicle via cruise control, or is restricted by the variable limiter.

or

- Press RES/.

  The last stored speed is called up and maintained by the vehicle via cruise control, or is restricted by the variable limiter.

  The current travel speed is stored if the last stored speed has been deleted.

ⓘ When you switch off the vehicle, the last stored speed is deleted. When you activate cruise control or Active Distance Assist DISTRONIC, the last speed stored for the variable limiter is deleted.

INCREASING/DECREASING THE STORED SPEED

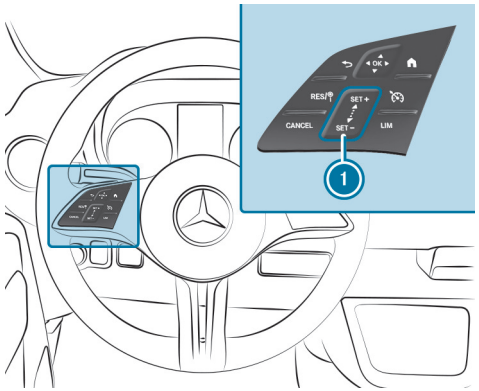

- **To increase:** Swipe across the switch panel (1) from the bottom up.
  - The stored speed is increased by 1 km/h.
- **To decrease:** Swipe across the switch panel (1) from the top down.
  - The stored speed is decreased by 1 km/h.

or

- Briefly press SET + or SET - on the control panel (1).

  THE STORED SPEED IS INCREASED OR DECREASED DEPENDING ON THE RESPECTIVE UNIT:

  - **mph:** the next value ending in 5 or 0
  - **km/h:** the next value ending in 0

or

- Press and hold SET + or SET - on the control panel (1).

  The stored speed is increased or decreased to the next increment of ten, and afterwards by increments of 10 km/h.

or

- Accelerate the vehicle to the desired speed.
- Press SET + on the control panel (1).

> ⓘ When the variable limiter is switched to passive mode, you cannot increase or decrease its stored speed in increments of 1 km/h.

ADOPTING A DETECTED SPEED

If cruise control/the variable limiter is activated and Traffic Sign Assist has detected a traffic sign with a maximum permissible speed and this is displayed on the instrument cluster display:

- Press RES/.

  The maximum permissible speed shown by the traffic sign is stored and the vehicle maintains, or does not exceed this speed.

DEACTIVATING CRUISE CONTROL OR THE VARIABLE LIMITER

- Press CANCEL.

> ⓘ If you brake, deactivate ESP®, or if ESP® intervenes, cruise control is deactivated. The variable limiter is not deactivated.
> When you switch off the vehicle, the last stored speed is deleted.

INFORMATION ON THE PERMANENT LIMITER

If the vehicle should never exceed a specific speed (e.g.driving in winter tyre mode), you can set this speed with the permanent limiter.

Shortly before reaching the set speed, the speed is shown on the instrument cluster display. When you confirm the message with ⇦, display messages no longer appear until you switch off the vehicle. The speed will only be displayed again once the vehicle has been restarted.

The permanent limiter does not switch to passive mode even during kickdown, and the driven speed remains below the set speed.

SETTING THE SPEED LIMITATION FOR WINTER TYRES

Multimedia system:

⌂ ▸▸ Settings ▸▸ Vehicle ▸▸ Winter tyre limit

- Select a speed or deactivate the function.

DSR (Downhill Speed Regulation)

NOTES ON DSR

WARNING
Risk of skidding and accident when DSR is activated on slippery road surfaces

If the driven speed and the target speed differ, the wheels may lose traction.

► Take into account the road surface and the difference between the driving speed and target speed before activating DSR.

DSR assists you with driving downhill. DSR maintains a set speed for you on downhill gradients by applying the brakes as required.

You are always responsible for keeping control of the vehicle and for assessing whether the downhill gradient can be negotiated. Depending on road surface conditions and tyres, DSR may not always be able to maintain the target speed. Select a target speed suitable for the ambient conditions and also apply the brakes yourself if required.

Observe the information on driving systems and be aware of your personal responsibility, otherwise you may fail to recognise potential dangers (→ page 372).

If DSR is switched on, DSR regulates the travel speed. The target speed can be set to a value between 4 km/h and 18 km/h using the brake and accelerator pedal or the control panel on the steering wheel. By braking or accelerating, you can drive at a lower or higher speed than the target speed at any time.

DSR CONTROL WILL ACTIVATE AUTOMATICALLY IN THE FOLLOWING SITUATIONS:

- If the vehicle is stationary, or its speed is less than 4 km/h , the speed is set to 4 km/h or it is set to the minimum speed for the respective gear range.
- If you drive offroad at a speed greater than 18 km/h, DSR switches to Standby mode. DSR will remain activated but will not brake automatically.
- If you drive downhill at less than 18 km/h, DSR will set the speed to the previously set speed.
- If you exceed 45 km/h, DSR will switch off automatically.

  The DSR Off message will appear on the instrument cluster and the status indicator will disappear. You will also hear a warning tone.

ACTIVATING/DEACTIVATING DSR

Requirements

- You are driving at a speed less than 40 km/h or the vehicle is stationary.

  If the vehicle speed is too high, a message reading Max. speed 40 km/h will appear on the instrument cluster display.
- Active Distance Assist DISTRONIC is deactivated.

TO ACTIVATE

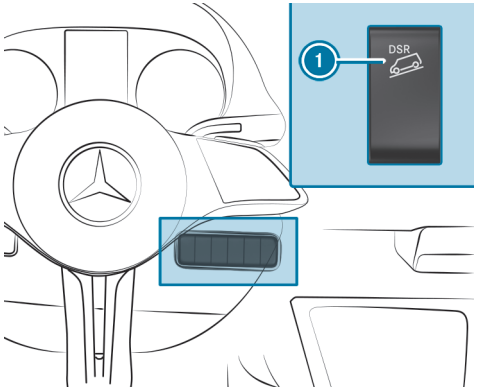

You can activate DSR when the vehicle is stationary or moving.

► Press the upper section of switch 1.

If the symbol [DSR] appears on the instrument cluster display, DSR is switched on.

TO DEACTIVATE

► Press the upper section of switch 1.

or

► Accelerate and drive at a speed greater than 45 km/h.

DSR WILL DEACTIVATE AUTOMATICALLY IN THE FOLLOWING SITUATIONS:

- As soon as you exceed a speed of 45 km/h.
- If there is a malfunction in the ESP® or ABS system.

CHANGING THE TARGET SPEED

CHANGE TARGET SPEED WITH BRAKE PEDAL OR ACCELERATOR PEDAL

ⓘ When DSR is activated, you can change the target speed to a value between 4 km/h and 18 km/h using the brake and accelerator pedals or the control panel on the steering wheel.

► Brake or accelerate the vehicle to the desired speed between 4 km/h and 18 km/h.

► Release the brake pedal or accelerator pedal.

The current speed is stored. When the vehicle is stationary, 4 km/h or the minimum possible speed for each gear range will be stored. DSR will maintain the stored speed on the downhill gradient and will brake automatically.

The set target speed is shown under the green status display [DSR] on the instrument cluster display.

CHANGE TARGET SPEED WITH THE CONTROL PANEL ON THE STEERING WHEEL

ⓘ When DSR is activated, you can change the target speed to a value between 4 km/h and 18 km/h.

The target speed can only be increased or decreased after the currently set target speed has been reached.

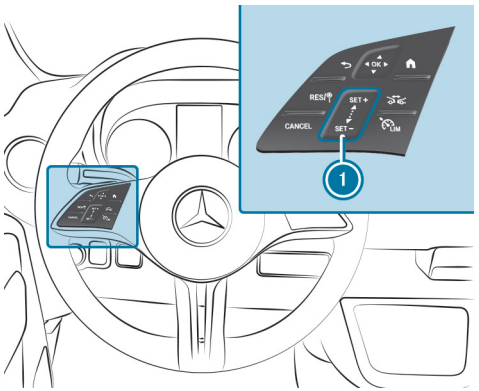

- **To increase the target speed:** swipe the control panel (1) from the bottom up.
  The target speed is increased by 1 km/h.

or

- At the top of the control panel (1), press SET + and hold pressed.
  The target speed is increased in 1 km/h increments.
- **To decrease the target speed:** swipe the control panel (1) from the top down.
  The target speed is decreased by 1 km/h.

or

- At the top of the control panel (1), press SET - and hold pressed.
  The target speed is decreased in 1 km/h increments.

The set target speed is shown alongside the status display DSR on the instrument cluster display.

Active Distance Assist DISTRONIC

FUNCTION OF ACTIVE DISTANCE ASSIST DISTRONIC

Active Distance Assist DISTRONIC is only available for vehicles with automatic transmission.

Active Distance Assist DISTRONIC maintains the set speed on a free-flowing road. If vehicles are detected ahead the set distance is maintained, if necessary until the vehicle comes to a standstill. The vehicle is accelerated or braked in correlation with the distance to the vehicle in front and with the set speed.

Speed and distance are set and stored on the steering wheel.

Available speed range: 20 km/h - 160 km/h

OTHER FEATURES OF ACTIVE DISTANCE ASSIST DISTRONIC:

- Initiation of acceleration to the stored speed if the turn signal indicator is switched on to change to the overtaking lane.
- **Vehicles with Driving Assistance Package:**
  - Reaction to detected stationary vehicles up to a speed of approx. 30 km/h (with the exception of bicycles and motorcycles)
  - Takes one-sided overtaking restrictions into account on motorways or multi-lane roads with separate carriageways (country-dependent)

Vehicles with Driving Assistance Package and Parking Package: if the vehicle has been braked to a standstill on multi-lane, separate carriageways by Active Distance Assist DISTRONIC, it can automatically follow the vehicle in front when driving off again within 60 seconds. If a critical situation is detected when driving off, a visual and acoustic warning is issued indicating that the driver must now take control of the vehicle. The vehicle is not accelerated any further.

Observe the information on driving systems and be aware of your personal responsibility, otherwise you may fail to recognise potential dangers (→ page 372).

NOTIFICATIONS OF ACTIVE DISTANCE ASSIST DISTRONIC ON THE INSTRUMENT CLUSTER DISPLAY

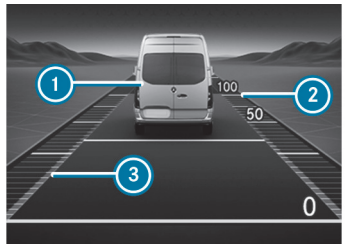

Assistance graphic (example)

1. Vehicle in front
2. Distance indicator
3. Set specified distance

The vehicle detected in front 1 is highlighted in green. It may also be in the lane to the right of your vehicle in situations where it is not permitted to overtake on the left, forexample, on UK motorways.

PERMANENT STATUS DISPLAY

Grey: Active Distance Assist DISTRONIC selected but not yet active.

Green speedometer, grey vehicle: Active Distance Assist DISTRONIC active, speed set.

Green: Active Distance Assist DISTRONIC active and vehicle detected.

The stored speed is shown under the permanent status display and indicated in the speedometer. Active Distance Assist DISTRONIC's status display is greyed out when in passive mode.

If the speed of the vehicle in front or the ascertained target speed due to the route event ahead is less than the stored speed, the segments in the speedometer light up.

If you increase or decrease the specified distance 3, the notification appears briefly.

ⓘ DISTRONIC starts up again automatically within 3 seconds. The green vehicle symbol is displayed cyclically when the vehicle is ready to pull away.

ⓘ The system can be switched to passive mode by depressing the accelerator pedal while Active Distance Assist DISTRONIC is active. The Passive message appears briefly on the instrument cluster display.

SYSTEM LIMITS

THE SYSTEM MAY BE IMPAIRED OR INOPERATIVE IN THE FOLLOWING SITUATIONS, FOREXAMPLE:

- In snow, rain, fog, heavy spray, if there is glare, in direct sunlight or in greatly varying light conditions.
- If the windscreen in the area of the camera is dirty, misted up, damaged or covered.
- If there is dirt on the radar sensors or if the radar sensors are covered.
- In multi-storey car parks or on roads with steep uphill or downhill gradients.

- If there are narrow vehicles in front, such as bicycles or motorcycles.

Additionally, braking or accelerating on slippery or slick roads can cause one or several wheels to lose traction and the vehicle could then begin skidding.

Do not use Active Distance Assist DISTRONIC in these situations.

WARNING
Risk of accident from acceleration or braking by Active Distance Assist DISTRONIC

ACTIVE DISTANCE ASSIST DISTRONIC MAY ACCELERATE OR BRAKE IN THE FOLLOWING CASES, FOR EXAMPLE:

- If the vehicle pulls away using Active Distance Assist DISTRONIC.
- If the stored speed is called up and is considerably faster or slower than the currently driven speed.
- If Active Distance Assist DISTRONIC no longer detects a vehicle in front or does not react to relevant objects.

► Always carefully observe the traffic conditions and be ready to brake at all times.

► Take into account the traffic situation before calling up the stored speed.

WARNING
Risk of accident due to insufficient deceleration by Active Distance Assist DISTRONIC

Active Distance Assist DISTRONIC brakes your vehicle with up to 50% of the possible deceleration. If this deceleration is not sufficient, Active Distance Assist DISTRONIC alerts you with a visual and acoustic warning.

► Adjust your speed and maintain a suitable distance from the vehicle in front.

► Brake the vehicle yourself and/or take evasive action.

WARNING
Risk of accident if detection function of Active Distance Assist DISTRONIC is impaired

ACTIVE DISTANCE ASSIST DISTRONIC DOES NOT REACT OR HAS A LIMITED REACTION:

- when driving on a different lane or when changing lanes
- to pedestrians, animals, bicycles or stationary vehicles, or unexpected obstacles
- to complex traffic conditions
- to oncoming vehicles and crossing traffic

As a result, Active Distance Assist DISTRONIC may neither give warnings nor intervene in such situations.

► Always observe the traffic conditions carefully and react accordingly.

WARNING
Risk of accident due to speed adaptation via Active Speed Limit Assist

The speed limit adopted by Active Speed Limit Assist may be too high or otherwise erroneous in certain circumstances:

- with speed limits below 20 km/h
- due to weather, e.g. in wet or foggy conditions

► Ensure that the speed driven always complies with the traffic regulations.

► Adjust the speed driven to the current traffic and weather conditions.

OPERATING ACTIVE DISTANCE ASSIST DISTRONIC AND OPERATING THE VARIABLE LIMITER

⚠ **WARNING**
Risk of accident if detection function of Active Distance Assist DISTRONIC is impaired

ACTIVE DISTANCE ASSIST DISTRONIC DOES NOT REACT OR HAS A LIMITED REACTION:

- when driving on a different lane or when changing lanes
- to pedestrians, animals, bicycles or stationary vehicles, or unexpected obstacles
- to complex traffic conditions
- to oncoming vehicles and crossing traffic

As a result, Active Distance Assist DISTRONIC may neither give warnings nor intervene in such situations.

► Always observe the traffic conditions carefully and react accordingly.

⚠ **WARNING**
Risk of accident from acceleration or braking by Active Distance Assist DISTRONIC

ACTIVE DISTANCE ASSIST DISTRONIC MAY ACCELERATE OR BRAKE IN THE FOLLOWING CASES, FOR EXAMPLE:

- If the vehicle pulls away using Active Distance Assist DISTRONIC.
- If the stored speed is called up and is considerably faster or slower than the currently driven speed.
- If Active Distance Assist DISTRONIC no longer detects a vehicle in front or does not react to relevant objects.

► Always carefully observe the traffic conditions and be ready to brake at all times.

► Take into account the traffic situation before calling up the stored speed.

WARNING
Risk of accident due to insufficient deceleration by Active Distance Assist DISTRONIC

Active Distance Assist DISTRONIC brakes your vehicle with up to 50% of the possible deceleration. If this deceleration is not sufficient, Active Distance Assist DISTRONIC alerts you with a visual and acoustic warning.

- ► Adjust your speed and maintain a suitable distance from the vehicle in front.
- ► Brake the vehicle yourself and/or take evasive action.

WARNING
Risk of accident due to speed adaptation via Active Speed Limit Assist

The speed limit adopted by Active Speed Limit Assist may be too high or otherwise erroneous in certain circumstances:

- with speed limits below 20 km/h
- due to weather, e.g. in wet or foggy conditions

- ► Ensure that the speed driven always complies with the traffic regulations.
- ► Adjust the speed driven to the current traffic and weather conditions.

Requirements

ACTIVE DISTANCE ASSIST DISTRONIC:

- The parking brake has been released.
- ESP® is activated and is not intervening.
- The transmission is in position D.
- The doors and the rear-end doors are closed.
- Checking of the radar sensor system has been successfully completed.
- The driver's seat belt is fastened.
- DSR is deactivated.

VARIABLE LIMITER:

- The variable limiter is selected.

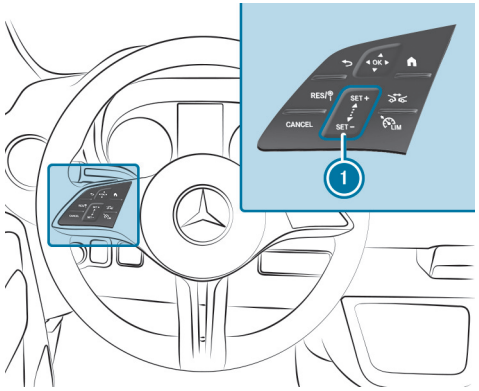

RES/	Adopts the stored/detected speed
CANCEL	Deactivates Active Distance Assist DISTRONIC/the variable limiter
1 SET + SET -	Control panel to increase/decrease speed

Increases/decreases the specified distance

Switches between the variable limiter and Active Distance Assist DISTRONIC

► **To operate Active Distance Assist DISTRONIC or the variable limiter:** press the respective button with only one finger or swipe across the control panel.

SWITCHES BETWEEN THE VARIABLE LIMITER AND ACTIVE DISTANCE ASSIST DISTRONIC

► Press LIM.

ACTIVATING ACTIVE DISTANCE ASSIST DISTRONIC OR THE VARIABLE LIMITER

► **To activate without a stored speed:** press SET +, SET - or RES/. **Active Distance Assist DISTRONIC:** remove your foot from the accelerator pedal.

The current vehicle speed is stored and maintained by the vehicle via Active Distance Assist DISTRONIC or is restricted by the variable limiter.

or

► **To activate with a stored speed:** press RES/. **Active Distance Assist DISTRONIC:** remove your foot from the accelerator pedal.

The last stored speed is called up and maintained by the vehicle via Active Distance Assist DISTRONIC or is restricted by the variable limiter.

If the stored speed has been deleted, the current vehicle speed is stored.

ⓘ When you switch off the vehicle, the stored speed is deleted. When you activate Active Distance Assist DISTRONIC, the speed stored for the variable limiter is deleted.

INCREASING OR DECREASING THE STORED SPEED

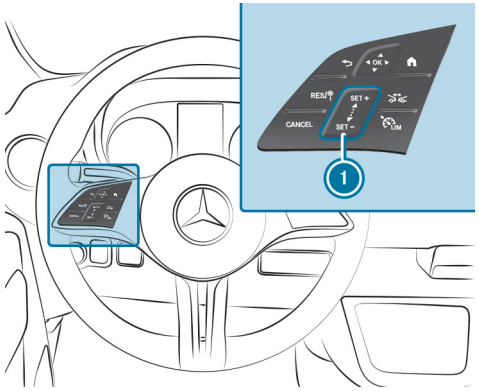

► **To increase:** swipe the control panel 1 from the bottom up.

The speed is increased by 1 km/h.

► **To decrease:** swipe the control panel 1 from the top down.

The speed is decreased by 1 km/h.

or

► Press SET + or SET - briefly on the control panel 1.

The speed is increased or decreased by 10 km/h.

or

► Press and hold SET + or SET - on the control panel 1.

The speed is increased or decreased in 10 km/h increments.

or

► Accelerate the vehicle to the desired speed.

► Press SET + on the control panel 1.

PULLING AWAY WITH ACTIVE DISTANCE ASSIST DISTRONIC

- Activate Active Distance Assist DISTRONIC and remove your foot from the brake pedal.
- Press RES/.

or

- Depress the accelerator pedal briefly and firmly.

  The functions of Active Distance Assist DISTRONIC remain active.

REDUCING OR INCREASING THE SPECIFIED DISTANCE FROM THE VEHICLE IN FRONT

- Press .

  The notification appears. The specified distance is reduced by one level.

  If the lowest level is already selected, the selection jumps to the highest level.

DEACTIVATING ACTIVE DISTANCE ASSIST DISTRONIC OR THE VARIABLE LIMITER

> ⚠ **WARNING**
> Risk of an accident due to Active Distance Assist DISTRONIC being active when you leave the driver's seat
>
> If you leave the driver's seat while the vehicle is being braked by Active Distance Assist DISTRONIC only, the vehicle can roll away.
>
> - Always deactivate Active Distance Assist DISTRONIC and secure the vehicle to prevent it from rolling away before you leave the driver's seat.

- Press CANCEL.

> ⓘ If you brake, deactivate ESP® or if ESP® intervenes, Active Distance Assist DISTRONIC is deactivated. The variable limiter is not deactivated.

FUNCTION OF ACTIVE SPEED LIMIT ASSIST

If a changed speed limit is detected and the automatic adoption of speed limits is switched on, this is automatically adopted as the stored speed (→ page 397). Speed limits below 20 km/h are not accepted.

Adjustment of the travel speed is initiated no later than when the vehicle is level with the traffic sign. For signs indicating entry into an urban zone, the speed is adapted according to that permitted within the built-up area. The speed restriction indicator on the instrument cluster display is always refreshed when the vehicle is level with the traffic sign.

If you are driving on German motorways with no speed limit, the system uses the speed stored for a stretch of road with no speed limit as the set speed. If you do not alter the stored speed on a stretch of road with no speed limit, the recommended speed of 130 km/h is adopted.

If Active Distance Assist DISTRONIC has been switched to passive mode by pressing the accelerator pedal, only speed limits which are higher than the set speed are adopted.

The maximum permissible speed does not consider the road condition and current weather and traffic conditions. Adjust your speed accordingly as necessary.

Observe the information on driving systems and be aware of your personal responsibility, otherwise you may fail to recognise potential dangers (→ page 372).

SYSTEM LIMITS
The system limits of Traffic Sign Assist apply to the detection of traffic signs (⟶ page 422).

Speed limits below 20 km/h are not automatically adopted by the system as the stored speed. Temporary speed restrictions (e.g.for a specific time or due to weather conditions) cannot be unequivocally detected by the system.

Adjust your speed in these situations.

> ⚠ **WARNING**
> Risk of accident due to speed adaptation via Active Speed Limit Assist
>
> The speed limit adopted by Active Speed Limit Assist may be too high or otherwise erroneous in certain circumstances:
>
> - with speed limits below 20 km/h
> - due to weather, e.g. in wet or foggy conditions
>
> ▶ Ensure that the speed driven always complies with the traffic regulations.
>
> ▶ Adjust the speed driven to the current traffic and weather conditions.

FUNCTION OF ROUTE-BASED SPEED ADAPTATION
When Active Distance Assist DISTRONIC is activated, the travel speed will be adapted to the route events ahead. When the route event has been passed, the vehicle accelerates again to the stored speed. The set distance to the vehicle in front, vehicles detected ahead and speed restrictions ahead are taken into account.

Route-based speed adaptation can be activated in the multimedia system (⟶ page 397).

THE FOLLOWING ROUTE EVENTS ARE TAKEN INTO ACCOUNT:

- Bends
- Roundabouts
- T-junctions
- Turns and exits

ALSO, THE SPEED IS REDUCED IF THE TURN SIGNAL INDICATOR IS SWITCHED ON AND ONE OF THE FOLLOWING SITUATIONS IS DETECTED:

- Turning off at junctions
- Driving in slowing-down lanes
- Driving in lanes adjacent to slowing-down lanes

The driver is responsible for choosing a suitable speed and observing other road users. This applies in particular to junctions, roundabouts and traffic lights, as route-based speed adaptation does not brake the vehicle to a standstill.

When route guidance is active, the first speed adaptation is carried out automatically. If the turn signal indicator is switched on, the selected route is confirmed and further speed adaptation is activated.

SPEED ADAPTATION IS CANCELLED IN THE FOLLOWING CASES:

- if the turn signal indicator is switched off before the route event and it is therefore presumed that the route event is not deemed relevant by the driver
- if the driver depresses the accelerator pedal or brake pedal during the process.

SYSTEM LIMITS

Route-based speed adaptation does not take right of way regulations into account. The driver is responsible for complying with road traffic regulations and driving at a suitable speed.

IN DIFFICULT CONDITIONS, THE SPEED SELECTION MADE BY THE SYSTEM MAY NOT ALWAYS BE SUITABLE. THIS APPLIES TO THE FOLLOWING SITUATIONS, FOREXAMPLE:

- the road's course is not clearly visible
- road narrowing
- varying maximum permissible speeds in individual lanes, forexample, at toll stations
- wet road surfaces, snow or ice
- if transport equipment, e.g. a trailer or bicycle rack, is attached to the trailer hitch and the electrical connection has been correctly established

In these situations the driver must intervene accordingly.

WARNING
Risk of accident in spite of route-based speed adaptation

Route-based speed adaptation can malfunction or be temporarily unavailable in the following situations:

- If the driver does not follow the calculated route
- If map data is not up-to-date or available
- In the event of roadworks
- In bad weather or road conditions
- If the accelerator pedal is depressed
- In the event of electronically displayed speed limitations

▶ Adapt the speed to the traffic situation.

SETTING ACTIVE DISTANCE ASSIST DRIVING STYLES

Requirements

- Active Distance Assist DISTRONIC is switched on.

Multimedia system:

▶ ⌂ ▶▶ Settings ▶▶ Assistance ▶▶ Driving ▶▶ Active Distance Assist

SETTING SPEED ADAPTATION

▶ Select Adopt speed limit or Route-based speed adjustment.

When these functions are active, the travel speed is adapted depending on the route events ahead or in accordance with a speed restriction.

IF ONE OF THE FOLLOWING SYSTEMS IS ACTIVATED, THE DETECTED SPEED CAN BE MANUALLY ADOPTED AS THE MAXIMUM PERMISSIBLE SPEED:

- Active Distance Assist DISTRONIC
- Variable limiter

Additional information on speed adaptation (→ page 396).

Active Steering Assist

FUNCTION OF ACTIVE STEERING ASSIST

Active Steering Assist is only available up to a speed of 160 km/h. The system helps you to stay in the centre of the lane by means of moderate steering interventions. Depending on the speed driven, Active Steering Assist uses the vehicles ahead and lane markings as a reference.

Depending on the respective country of use, in the lower speed range Active Steering Assist can use the surrounding traffic as a reference. Active Steering Assist can also provide support when driving outside the centre of the lane, forexample, to form an emergency corridor.

If the detection of lane markings and vehicles ahead is impaired, Active Steering Assist switches to passive mode. The system provides no support in this case.

STATUS DISPLAY OF ACTIVE STEERING ASSIST

Grey: activated and passive

Green: activated and active

Red: system limits detected

White, red hands: "hands on the steering wheel" prompt

During the transition from active mode to passive mode, the symbol is shown as enlarged and flashing. When passive mode is reached, the symbol is shown in grey on the instrument cluster display.

Depending on the selected vehicle settings, Active Steering Assist may be unavailable.

STEERING AND TOUCH DETECTION

The driver is required to keep their hands on the steering wheel at all times and be able to intervene at any time to correct the course of the vehicle and keep it in lane. The driver must expect a change from active mode to passive mode or vice versa at any time.

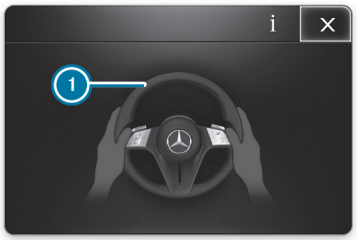

If the system detects that the driver has not steered the vehicle for a considerable period of time or has removed their hands from the steering wheel, the display 1 appears. If the driver still does not steer the vehicle, a warning tone sounds in addition to the visual warning message.

If the driver does not react to this warning for a considerable period, an emergency stop can be initiated (⟶ page 400).

The warning is not issued, or stops as soon as the system detects the driver touching or steering the steering wheel.

Touch detection may be limited or inoperative if there is no direct contact between the hands and the steering wheel, e.g. when wearing gloves or if there is a steering wheel cover on the steering wheel.

If Active Steering Assist detects that a system limit has been reached, a visual warning is issued and a warning tone sounds.

Observe the information on driving systems and be aware of your personal responsibility, otherwise you may fail to recognise potential dangers (⟶ page 372).

SYSTEM LIMITS
Active Steering Assist has a limited steering torque for lateral guidance. In some cases, the steering intervention is not sufficient to keep the vehicle in the lane or to drive through exits.

THE SYSTEM MAY BE IMPAIRED OR INOPERATIVE IN THE FOLLOWING INSTANCES:

- There is poor visibility, e.g. due to snow, rain, fog, heavy spray, greatly varying light conditions or dense shadows on the carriageway.
- There is glare, e.g. from oncoming traffic, direct sunlight or reflections.
- Insufficient road illumination.
- The windscreen is dirty, misted up, damaged or covered in the vicinity of the camera, e.g. by a sticker.
- There are no lane markings in a given lane, or the markings are not easily discernible or change quickly, forexample, in a construction area or at junctions.
- The lane markings are worn away, dark or covered up, forexample, by dirt or snow
- if the distance to the vehicle in front is too short and the lane markings cannot be detected
- The roadway is narrow and winding
- There are obstacles on the lane or projecting out into the lane, suchas object markers.
- If transport equipment, e.g. a trailer or bicycle rack, is attached to the trailer hitch and the electrical connection has been correctly established

THE SYSTEM DOES NOT PROVIDE ASSISTANCE IN THE FOLLOWING CONDITIONS:

- On tight bends and when turning.
- When crossing junctions.
- At roundabouts or toll stations.
- When the tyre pressure is too low.

⚠ **WARNING**
Risk of accident if Active Steering Assist unexpectedly stops functioning

If the system limits of Active Steering Assist are reached there is no guarantee that the system will remain active or will keep the vehicle in lane.

► Always keep your hands on the steering wheel and observe the traffic carefully.

► Always steer the vehicle paying attention to traffic conditions.

WARNING
Risk of accident if Active Steering Assist unexpectedly intervenes

The detection of lane markings and objects may malfunction and cause unexpected steering interventions.

▶ Steer according to traffic conditions.

ACTIVATING/DEACTIVATING ACTIVE STEERING ASSIST

Requirements

- ESP® is activated but is not intervening.
- Active Distance Assist DISTRONIC is switched on.

Multimedia system:

▶ ⌂ ▶▶ Settings ▶▶ Assistance ▶▶ Driving

▶ Activate or deactivate Active Steering Assist.

Function of Active Emergency Stop Assist

ⓘ The following function is only available in combination with the Driving Assistance Package.

Active Emergency Stop Assist monitors the steering wheel, as well as the accelerator and brake pedals. If the system detects a lack of driver activity and the vehicle is in danger of leaving the lane, a warning can be issued and an emergency stop initiated.

If Active Steering Assist is switched off, the system is available from a speed of approx. 60 km/h.

IF THE VEHICLE IS IN DANGER OF LEAVING THE LANE, A WARNING IS ISSUED IN THE FOLLOWING CASES.

- The driver has not touched the steering wheel for a certain while, or no steering movement is detected for a lengthy period (depending on the respective vehicle equipment).
- Neither the accelerator pedal nor the brake pedal is depressed.

ⓘ If Active Steering Assist is switched on and active, the system only monitors the steering wheel. If the driver has not touched the steering wheel for a certain while, a warning may be issued despite pedal actuation.
Also observe the instructions on the touch detection of Active Steering Assist (→ page 398).

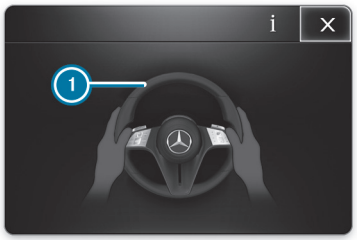

ACTIVE EMERGENCY STOP ASSIST ISSUES THE FOLLOWING WARNINGS IN ORDER:

- The notification ① appears on the instrument cluster display.
- In addition to the notification ①, a warning tone sounds.
- The Emergency stop initiated message appears on the instrument cluster display, a continuous warning tone sounds and the vehicle will no longer accelerate. Additionally, a gentle tensioning of the belt is effected as necessary.

- The vehicle speed is reduced in increments until the vehicle comes to a standstill. Sharp brake impulses are also effected.

When automatic braking is initiated, Active Distance Assist DISTRONIC is deactivated. Depending on the respective country of use, the hazard warning light system is also switched on.

WHEN THE VEHICLE HAS COME TO A STANDSTILL:

- the vehicle is secured with the electric parking brake.
- the vehicle is unlocked.
- if possible, an emergency call is made to the Mercedes-Benz emergency call centre.

Before the Emergency stop initiated message appears, you can cancel Active Emergency Stop Assist by manually turning the steering wheel.

ONCE THE EMERGENCY STOP INITIATED MESSAGE HAS BEEN DISPLAYED, ACTIVE EMERGENCY STOP ASSIST CAN BE CANCELLED AS FOLLOWS:

- Accelerating or braking: the emergency stop is cancelled, but the warning message, warning tone and electric power steering remain active.
- Steering: electric power steering is cancelled, the warning message and warning tone remain active, and the vehicle continues to be braked.
- Steering and accelerating or braking: the emergency stop and electric power steering are cancelled. The warning message and the warning tone are cancelled.

ⓘ Active Emergency Stop Assist can initiate an emergency stop a maximum of three times within a driving cycle. After that, Active Steering Assist and Active Emergency Stop Assist are disabled until the vehicle has been restarted.

SYSTEM LIMITS

FOR THE DETECTION OF VEHICLES AND OTHER OBSTACLES, OBSERVE THE SYSTEM LIMITS OF THE FOLLOWING FUNCTIONS:

- Active Distance Assist DISTRONIC (⟶ page 388)
- Active Steering Assist (⟶ page 398)
- Active Lane Keeping Assist (⟶ page 434)
- Active Brake Assist (⟶ page 378)

ACTIVE EMERGENCY STOP ASSIST IS NOT ACTIVE IN THE FOLLOWING CASE:

- Active Lane Keeping Assist and Active Steering Assist are switched off.

Speed Limit Assist

FUNCTION OF SPEED LIMIT ASSIST

Speed Limit Assist records traffic signs with the multifunction camera and compares them with information from a digital street map in the multimedia system. It assists you by showing detected speed restrictions on the instrument cluster display. Speed restrictions further limited by an additional sign, e.g.in wet conditions, can also be detected and evaluated by the camera.

The system can issue a warning when you exceed the maximum permissible speed.

Speed Limit Assist only portrays selected signs on the instrument cluster display. Actual traffic signs and speed restrictions always take priority over the traffic signs and speed restrictions shown on the display.

NOTES ON TRAILER OPERATION

ⓘ Also observe the notes on trailer operation (⟶ page 441).

If a trailer or bicycle rack is connected correctly, the media display shows the query concerning the type of trailer and its respective maximum permissible speed .

It is the responsibility of the driver to manually adapt the maximum permissible speed in the respective – small or large trailer – category.

IN PARTICULAR, COUNTRY-SPECIFIC LAWS MUST BE TAKEN INTO ACCOUNT, E.G.ON:

- maximum design speed or maximum permissible speed for which the vehicle is approved
- permissible gross mass with or without towing vehicle
- required number of years with a corresponding driving licence
- type and condition of the road being travelled
- the weather conditions

The maximum permissible speed adapted to the vehicle/trailer combination can be adopted in the manual or automatic speed transfer during the journey (depending on the respective equipment).

On the system side, relevant additional signs for speed restrictions and clear road category traffic rules can be considered for the vehicle/trailer combination (depending on the respective country of use).

No maximum permissible speed can be selected for a bicycle rack in the multimedia system. When using a bicycle rack, observe the specifications for the maximum permissible speed in the Owner's Manual provided by the manufacturer.

THE FOLLOWING INFORMATION SHOULD ALSO BE OBSERVED:

- Select a speed adapted to the traffic, surroundings and weather conditions.
- Observe actual traffic signs.
- Observe applicable traffic rules and regulations.

Observe the information on driving systems and be aware of your personal responsibility, otherwise you may fail to recognise potential dangers (⟶ page 372).

NOTIFICATIONS ON THE INSTRUMENT CLUSTER DISPLAY

The display of Speed Limit Assist is relayed in the Assistance menu of the instrument cluster (⟶ page 456).

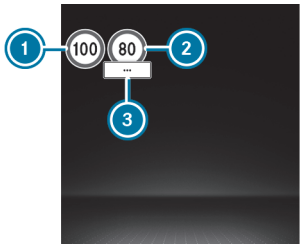

① Permissible speed
② Permissible speed when there is a restriction
③ Additional sign with a restriction

The system can show up to two traffic signs on the instrument cluster display simultaneously. The system always prioritises displaying speed restrictions. If two speed limit signs are shown on the instrument cluster display, e.g.in cases where restrictions are detected, the value of the speed restriction on the left ① is always conveyed to the limiter, cruise control or to Active Distance Assist DISTRONIC for adoption.

Important information from other systems can cause traffic signs to be hidden for a short time.

SPEED LIMIT ASSIST CAN DETECT AND DISPLAY THE FOLLOWING TRAFFIC SIGNS ①:

- speed restrictions
- end of the speed restriction
- play streets
- depending on the respective country: signs showing the start or end of motorways and dual carriageways

SPEED LIMIT ASSIST CAN DETECT THE FOLLOWING ADDITIONAL SIGNS ③ AND EVALUATE RELEVANCE OF THE RESTRICTIONS WHERE NECESSARY USING AUXILIARY VEHICLE SENSORS:

- in wet conditions
- slippery road surfaces
- in fog
- temporary restrictions
- exits
- restrictions for vehicle/trailer combinations

Speed Limit Assist also uses the data from a digital street map in the multimedia system. When you pass a town or city boundary or move from one road onto another, e.g.when joining or exiting a motorway, or when turning at a crossroads, the view on the instrument cluster display can thus also be updated without a traffic sign having been detected.

ⓘ Update the digital street map of the multimedia system regularly to ensure optimum functionality of Speed Limit Assist (→ page 49).

If Speed Limit Assist cannot determine the current maximum permissible speed, e.g.due to absent signage, the following display appears on the instrument cluster display:

Speed Limit Assist is not available in all countries. If the vehicle is located in a country in which Speed Limit Assist is not supported, this display is relayed permanently.

If Speed Limit Assist is temporarily or permanently unavailable due to a technical fault or dirt on the windscreen, a corresponding display message appears on the instrument cluster display and the Speed Limit Assist warning lamp lights up.

ⓘ Also refer to the information regarding display messages for Speed Limit Assist (→ page 761).

WARNING WHEN THE MAXIMUM PERMISSIBLE SPEED IS EXCEEDED

The system can warn you if you are about to exceed the detected maximum permissible speed. Depending on the respective country, you can set how much the maximum permissible speed may be exceeded in the multimedia system before a warning is issued. You can select in the settings whether the warning should be issued visually, with the traffic sign flashing on the instrument cluster display, or as a combination of visual and audible warning. Selection of the type of warning is confirmed via a notification on the instrument cluster display, depending on the respective country of use.

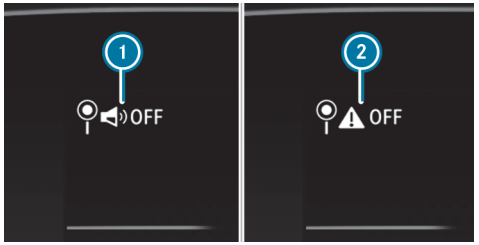

1 Visual warning only
2 Warning off

ⓘ The type, duration and deployment stages of the speed warning, as well as the option of setting the timing of the deployment stages upon which the warning is issued, are subject to legislation valid for the respective country in which the vehicle is delivered.

SYSTEM LIMITS

THE SYSTEM MAY BE IMPAIRED OR INOPERATIVE IN THE FOLLOWING SITUATIONS IN PARTICULAR:

- If visibility is poor, e.g.due to insufficient illumination of the road, highly variable shade conditions, rain, snow, fog, swirling dust or heavy spray.
- If there is glare, e.g.from oncoming traffic, direct sunlight or reflections.
- If there is dirt on the windscreen in the vicinity of the multifunction camera or if the camera is misted up, damaged or covered.
- If the traffic signs are difficult to see because, forexample, they are dirty, obscured, faded, iced over, damaged, inconveniently positioned, insufficiently illuminated or askew.
- Active traffic signs with LED displays may not be detected correctly, or even at all due to technical factors, suchas transmission frequency.
- If the information in the digital street map of the multimedia system is inaccurate or incomplete, or has not been updated.
- If the signage, road markings or road layout are ambiguous, e.g.traffic signs at road works, at exits and slip roads, adjacent lanes or parallel roads, and pedestrian crossing markings at traffic lights.
- If the signage or road markings do not comply with the standard.
- If the signage, road markings or road guidance are country-specific and deviate from the navigation system's route guidance, e.g.at or after road works.
- After sharp turns and in tight bends, when traffic signs are outside the camera's field of vision.
- If you overtake vehicles with traffic signs which are affixed or attached to them.
- If you use transport equipment secured to the vehicle with a trailer coupling, suchas a bicycle rack, restrictions for vehicle/trailer combinations may be deemed applicable.
- If special restrictions as a vehicle/trailer combination apply for certain approval types, which the system cannot determine or recognise.
- In country-specific vehicle classes for which requirements for the maximum permissible speed have been modified.

SETTING SPEED LIMIT ASSIST

Multimedia system:

Settings ▶▶ Assistance ▶▶ Assistance ▶▶ Speed Limit Assist

ACTIVATING OR DEACTIVATING THE SPEED WARNING

ⓘ The speed warning is switched on by default (depending on the respective country of use).

► Deactivate Speed limit warning.

Following country-specific legislation, the speed warning remains deactivated until the next time the vehicle is switched on or off.

ⓘ The audible speed warning can also be switched on and off via quick-access by pressing and holding the mute button on the steering wheel, by pressing the speed icon in the status line of the media display or via voice command (availability of these functions is country-dependent).

CHANGING THE TYPE OF SPEED WARNING

► Change the warning to Visual or Visual & audible.

SWITCHING THE ACOUSTIC SIGNAL FOR A NEW MAXIMUM PERMISSIBLE SPEED ON OR OFF

ⓘ The acoustic signal for a new maximum permissible speed is switched off at the factory.

The function determines whether a subtle, non-intrusive sound supports each change of the displayed speed in the instrument cluster.

► Activate or deactivate the function.

ⓘ Availability of the function is dependent on the respective country of use.

SETTING THE WARNING THRESHOLD

This value determines the speed at which a warning is issued when exceeded.

► Set the desired speed under Warning Threshold.

Availability of the function is subject to country-specific legislation.

IF ONE OF THE FOLLOWING SYSTEMS IS ACTIVATED, THE DETECTED SPEED CAN BE MANUALLY ADOPTED AS THE MAXIMUM PERMISSIBLE SPEED:

- Active Distance Assist DISTRONIC
- Cruise control
- Variable limiter

ⓘ Additional information on Active Distance Assist DISTRONIC (→ page 392).

Information on Hill Start Assist

HILL START ASSIST HOLDS THE VEHICLE FOR A SHORT TIME WHEN PULLING AWAY ON A HILL UNDER THE FOLLOWING CONDITIONS:

- **Vehicles with manual transmission:** a gear is engaged.
- **Vehicles with automatic transmission:** the transmission is in position D or R.
- The parking brake has been released.

This gives you enough time to move your foot from the brake pedal to the accelerator pedal and depress it before the vehicle begins to roll.

WARNING
Risk of accident and injury due to the vehicle rolling away

After a short time, Hill Start Assist no longer holds the vehicle.

- Swiftly move your foot from the brake pedal to the accelerator pedal. Do not leave the vehicle when it is being held by Hill Start Assist.

HOLD function

NOTES ON THE HOLD FUNCTION

FUNCTION

The HOLD function is only available for vehicles with automatic transmission.

The HOLD function holds the vehicle at a standstill without you needing to depress the brake pedal, e.g. when pulling away on a slope or when waiting in traffic. When you depress the accelerator pedal to pull away, the braking effect is cancelled and the HOLD function is deactivated.

The HOLD function is only an aid. Responsibility for keeping the vehicle safely at a standstill remains with the driver.

SYSTEM LIMITS

The HOLD function is only intended to provide assistance during driving operation and is not an adequate means of securing the stationary vehicle against rolling away.

The incline cannot be greater than 30%.

ACTIVATING/DEACTIVATING THE HOLD FUNCTION

WARNING
Risk of an accident due to the HOLD function being active when you leave the vehicle

IF THE VEHICLE IS ONLY BRAKED WITH THE HOLD FUNCTION IT COULD, IN THE FOLLOWING SITUATIONS, ROLL AWAY:

- If there is a malfunction in the system or in the power supply.
- If the HOLD function is deactivated by depressing the accelerator pedal or brake pedal, e.g. by a vehicle occupant.

- Always secure the vehicle against rolling away before you leave it.

Requirements:

- The vehicle has an automatic transmission.
- The vehicle is stationary.
- The vehicle has been started or has been automatically switched off by the ECO start/stop function.
- The driver is seated and belted.
- The electric parking brake is released.
- The transmission is in position D, R or N.

ACTIVATING THE HOLD FUNCTION

- Depress the brake pedal until the symbol HOLD is displayed in the instrument cluster.
- Release the brake pedal.

ⓘ If depressing the brake pedal the first time does not activate the HOLD function, wait briefly and then try again.

DEACTIVATING THE HOLD FUNCTION

► Depress the accelerator pedal to move off.

or

► Depress the brake pedal until the symbol HOLD in the instrument cluster disappears.

ⓘ After a short period of time, the transmission shifts to position P to relieve the load on the service brake.

WHEN THE HOLD FUNCTION IS ACTIVATED, THE TRANSMISSION AUTOMATICALLY SHIFTS TO POSITION P IN THE FOLLOWING SITUATIONS:

- The driver unbuckles the seat belt and leaves the driver's seat.
- The driver's door is opened.
- The vehicle is switched off without the ECO start/stop function.

Parking Assist PARKTRONIC

FUNCTION OF PARKING ASSIST PARKTRONIC

Parking Assist PARKTRONIC is an electronic parking assistance system which monitors the area surrounding your vehicle. The distance between your vehicle and a detected obstacle is displayed visually and audibly.

The passive side impact protection also warns you of obstacles to the side. These must be detected beforehand by the sensors in the front or rear bumper while driving by them. If you steer in the direction of a detected obstacle and there is a risk of lateral collision, a warning is issued.

In order that front or rear obstacles to the side can be displayed, the vehicle must first travel a distance of at least half a vehicle length. Once the vehicle has travelled a distance of one vehicle length, obstacles on all sides can be shown.

Parking Assist PARKTRONIC serves solely as an aid. It is not a substitute for you having to pay attention to your surroundings. The responsibility for safe manoeuvring, parking and exiting parking spaces remains with you. Ensure that there are no persons, animals or objects etc. in the manoeuvring area while manoeuvring and parking in/exiting parking spaces.

INDICATIONS IN THE MEDIA DISPLAY

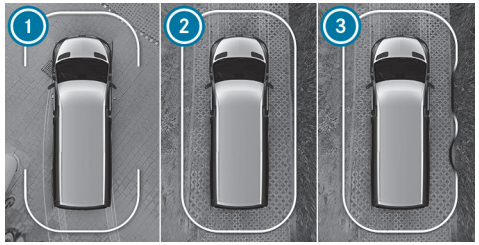

Example: vehicles with 360° camera

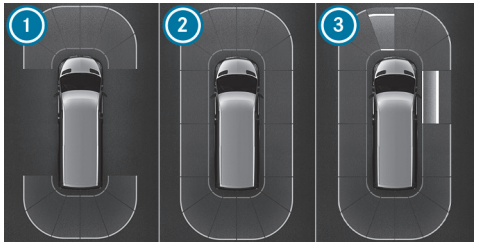

Example: vehicles with reversing camera

1. Ready for display at the front and rear
2. Ready for display all around
3. Ready for display all around and obstacles detected

As soon as Parking Assist PARKTRONIC is ready for display, the respective areas 1 to 3 of the display are shown in blue.

THE COLOUR OF THE DISPLAY CHANGES DEPENDING ON THE DISTANCE TO THE DETECTED OBSTACLE:

- **Blue:** > 1 m (no obstacles detected)
- **Yellow:** approximately 1 m - 0.7 m
- **Orange:** approximately 0.7 m - 0.4 m
- **Red:** < 0.4 m

Vehicles with 360° camera: the boundary line shifts dynamically depending on the position and distance of the obstacles detected.

An intermittent warning tone also sounds depending on the distance to the obstacle detected. You can set the timing of the warnings in the multimedia system. In the Warn early setting, the system warns you from a distance of 1 m. In the standard setting, from a shorter distance of 0.4 m.

Example: vehicles with 360° camera

Example: vehicles with reversing camera

If you are not in the Camera & parking menu and an obstacle in the vehicle's path is detected, a pop-up window 1 appears in the media display up to a speed of 12 km/h.

SYSTEM LIMITS

PARKING ASSIST PARKTRONIC DOES NOT NECESSARILY TAKE INTO ACCOUNT THE FOLLOWING OBSTACLES:

- Obstacles below the detection range, e.g. persons, animals or objects.
- Obstacles above the detection range, e.g. protruding loads, overhangs or loading ramps of lorries.
- Pedestrians or animals approaching the vehicle from the side.
- Objects placed next to the vehicle.

OBSTACLES ON THE SIDES ARE NOT SHOWN IN THE FOLLOWING SITUATIONS, FOR EXAMPLE:

- You park the vehicle and switch it off.
- You open the doors.

After the vehicle is restarted, obstacles must be detected again by driving past them before a new warning can be issued.

OBSERVE ALSO THE SYSTEM LIMITS OF THE FOLLOWING SYSTEMS:

- Reversing camera (→ page 410)
- 360° camera (→ page 414)

Observe the information on vehicle sensors and cameras, otherwise the system cannot function properly (→ page 372).

Vehicles with trailer hitch: if a transport device, e.g. trailer or bicycle rack is attached to the trailer hitch and the electrical connection is correctly established, Parking Assist PARKTRONIC is deactivated for the rear zone.

PROBLEMS WITH PARKING ASSIST PARKTRONIC
If the Parking Assist PARKTRONIC display lights up red for approximately three seconds and then goes out, and the P OFF symbol appears on the instrument cluster display, the system may have been deactivated due to signal interference. Start the vehicle again and check whether Parking Assist PARKTRONIC works in a different location.

IF A WARNING TONE ALSO SOUNDS, THIS MAY BE DUE TO THE FOLLOWING:

- **The sensors are dirty:** clean the sensors (→ page 624).
- **Licence plates or other detachable parts in the vicinity of the sensors are not correctly fastened:** check the licence plate or the detachable parts to ensure that they are securely fixed.
- **Parking Assist PARKTRONIC has been deactivated due to a malfunction:** restart the vehicle. If the problem persists, consult a qualified specialist workshop.

DEACTIVATING/ACTIVATING PARKING ASSIST PARKTRONIC

> **NOTE**
> Vehicle damage when parking or manoeuvring due to nearby objects
>
> Parking Assist PARKTRONIC may not detect certain objects in the close-up range.
>
> ► When parking or manoeuvring, pay particular attention to objects that are under or above the sensors, e.g. flower pots or drawbars. The vehicle or other objects may otherwise be damaged.

Requirements

Ensure that there are no persons, animals or objects etc. in the manoeuvring area while manoeuvring and parking in/exiting parking spaces.

Multimedia system:
→ ⌂ ▸▸ Settings ▸▸ Quick-access

► Select PARKTRONIC On.
This function is activated or deactivated according to the previous setting.

ⓘ Parking Assist PARKTRONIC is automatically activated upon vehicle start.

SETTING THE WARNING TONES OF PARKING ASSIST PARKTRONIC
Multimedia system:
Settings ▶▶ Assistance ▶▶ Parking ▶▶ Set warning tones

ADJUSTING THE VOLUME OF THE WARNING TONES

- Select Warning tone volume.
- Set a value.

ADJUSTING THE PITCH OF THE WARNING TONES

- Select Warning tone pitch.
  Set a value.

SPECIFYING THE STARTING POINT FOR THE WARNING TONES
You can stipulate whether the Parking Assist PARKTRONIC warning tones should be activated with the vehicle at a greater distance from the obstacle.

- Select Warn early.
- Activate or deactivate the function.

ACTIVATING/DEACTIVATING AUDIO FADEOUT
You can stipulate whether the volume of a media source in the multimedia system should be reduced during a Parking Assist PARKTRONIC warning tone.

- Select Audio fade for warnings.
- Activate or deactivate the function.

Rearview camera

FUNCTION OF THE REVERSING CAMERA

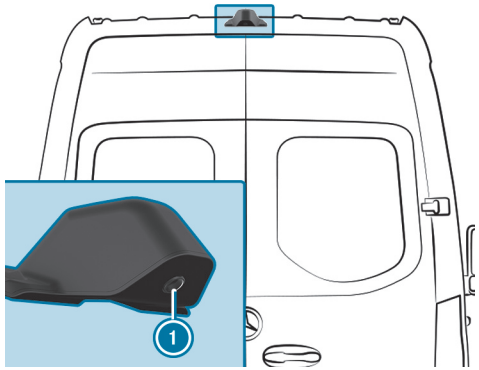

Dynamic guide lines show the vehicle's path for the current steering movement. This helps you to orient yourself and to avoid obstacles when reversing.

If the vehicle is switched on with the reverse gear engaged, or if the rear-end doors are opened, the image from the reversing camera is shown on the media display.

This allows the area behind the vehicle to be monitored.

When the rear-end doors are closed, the image from the reversing camera is switched off after approximately ten seconds.

The reversing camera serves solely as an aid. It is not a substitute for you having to pay attention to your surroundings. You are responsible for safe manoeuvring and parking at all times. Ensure that there are no persons, animals or objects etc. in the manoeuvring area while manoeuvring and parking.

The reversing camera may show a distorted view of obstacles, show them incorrectly or even omit them altogether. The reversing camera cannot show all objects in immediate proximity to, or beneath the rear bumper.

The area behind the vehicle is displayed as a mirror image, as it would appear in the inside mirror.

VEHICLES WITHOUT PARKING PACKAGE

The trailer view from the reversing camera may not be available for platform vehicles, depending on the respective vehicle version.

CAMERA PERSPECTIVES ON THE MEDIA DISPLAY

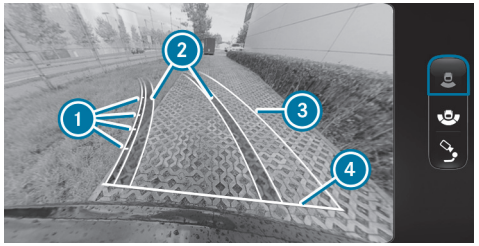

Example

1. Guide lines at a distance of approximately 0.5 m, 1.0 m, 1.5 m and 3.0 m from the rear area
2. Path marking the course the wheels will take with the current steering angle (dynamic)
3. Driven surface depending on the current steering angle (dynamic)
4. Guide line at a distance of approximately 0.3 m from the rear area

WIDE-ANGLE VIEW

Example

1. Activation

TRAILER VIEW

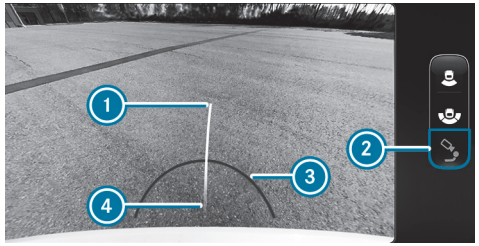

Example

1. Yellow guide line, locating aid
2. Switches on the trailer view
3. Red guide line at a distance of approximately 0.3 m from the ball head of the trailer hitch
4. Ball head of the trailer hitch

PEDESTRIAN BRAKING FUNCTION

ⓘ This function is only available in vehicles without the Parking Package. Vehicles with the Parking Package are equipped with manoeuvring assistant functions (→ page 426).

The pedestrian braking function can prevent collisions with pedestrians when reversing the vehicle at slow speeds. If the reversing camera detects a person in the vehicle's path, the vehicle can be braked to a standstill.

THE PEDESTRIAN BRAKING FUNCTION CAN INTERVENE UNDER THE FOLLOWING CONDITIONS:

- The vehicle is reversing at a speed slower than 10 km/h.
- The camera image is shown on the media display.

When automatic braking is triggered, the symbol appears in red in the camera image.

In addition, the message Pedestrian! Deact. emerg. braking: press here appears.

The driver can close or ignore this message. Pedestrian braking then remains active. When the driver taps the message, pedestrian braking is momentarily deactivated.

IN THE FOLLOWING SITUATIONS, THE PEDESTRIAN BRAKING FUNCTION IS ACTIVATED AGAIN:

- The vehicle is travelling forwards faster than 16 km/h.
- The vehicle is switched off and then back on again.

ⓘ If the function is unavailable or deactivated, the symbol appears in grey in the camera image.

The pedestrian braking function serves solely as an aid. It is not a substitute for you having to pay attention to your surroundings. The responsibility for safe manoeuvring, parking and exiting parking spaces remains with you at all times. Ensure that no persons, animals, objects, etc. are in the vehicle path.

⚠ **WARNING**
Risk of accident caused by limited detection of the pedestrian braking function

The pedestrian braking function cannot always clearly detect people. Other obstacles are not detected by the function.

In these cases, the function may brake unnecessarily or not brake at all.

► Always pay careful attention to the traffic situation; do not rely on the pedestrian braking function alone.

► Be ready to brake.

IN THE FOLLOWING SITUATIONS, THE PEDESTRIAN BRAKING FUNCTION IS NOT AVAILABLE:

- on uphill gradients
- if transport equipment, e.g.a trailer or bicycle rack, is attached to the trailer hitch and the electrical connection has been correctly established
- if the reversing camera is not operational

Please also note the system limits of the reversing camera.

VEHICLES WITH PARKING PACKAGE

The following camera perspectives are available in the media display:

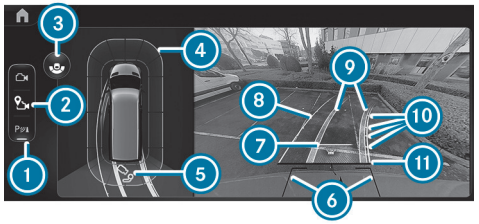

Camera views menu (standard view)

1. Activates/deactivates Parking Assist PARKTRONIC
2. Sets the GPS activation point (⟶ page 420)
3. Switches between wide-angle view and standard view for the reversing camera
4. Warning display of Parking Assist PARKTRONIC (⟶ page 407)
5. Switches between standard view and trailer view (depending on the respective equipment)
6. Red guide lines at a distance of approximately 0.2 m from the rear area, vehicle width including outside mirrors
7. Area required (shaded) with guide line to open the rear-end doors completely
8. Driven surface depending on the current steering angle (dynamic)
9. Path marking the course the wheels will take with the current steering angle (dynamic)
10. Guide lines at a distance of approximately 1.0 m, 1.5 m, 2.0 m and 3.0 m from the rear area
11. Guide line at a distance of approximately 0.3 m from the rear area

Wide-angle view (example)

1. Activates/deactivates Parking Assist PARKTRONIC
3. Switches between wide-angle view and standard view for the reversing camera
4. Warning display of Parking Assist PARKTRONIC (⟶ page 407)

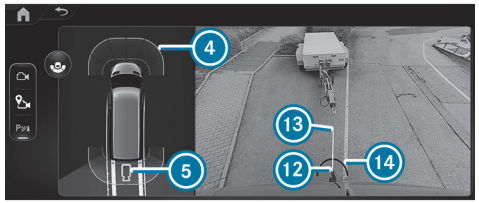

Trailer view (example)

4. Warning display of Parking Assist PARKTRONIC (⟶ page 407)
5. Switches between standard view and trailer view (depending on the respective equipment)
12. Ball head of the trailer hitch
13. Yellow guide line, locating aid
14. Red guide line at a distance of approximately 0.3 m from the ball head of the trailer hitch

SYSTEM LIMITS

THE REVERSING CAMERA WILL NOT FUNCTION, OR WILL ONLY PARTIALLY FUNCTION IN THE FOLLOWING SITUATIONS, FOR EXAMPLE:

- If there is heavy rain, snow or fog.
- If the light conditions are poor, e.g.at night.
- If the surroundings are illuminated with fluorescent lighting, the display may flicker.
- If the temperature changes very quickly, forexample, driving out of the cold into a heated garage during the winter months.
- If the ambient temperature is very high.
- If the camera lens is obstructed, dirty or misted up. Observe the notes on cleaning the reversing camera (→ page 624).
- If the camera or rear of your vehicle is damaged. In this event, have the cameras, their positions and their setting checked at a qualified specialist workshop.

The field of vision and other functions of the reversing camera may be restricted due to additional vehicle attachments on the rear of the vehicle (e..a cargo liftgate).

ⓘ The display contrast may be impaired due to incidental sunlight or other light sources. Particular attention should be afforded in these conditions.

ⓘ Have the display repaired or replaced if its use is considerably restricted due to pixel errors, forexample.

ⓘ **OBJECTS NOT AT GROUND LEVEL CAN APPEAR FURTHER AWAY THAN THEY ACTUALLY ARE. THIS INCLUDES, FOREXAMPLE:**

- the bumper of a vehicle parked behind
- the drawbar of a trailer
- the ball neck of a trailer hitch
- the tail-end of a lorry
- slanted posts

Only use the guide lines of the camera image for orientation. Do not travel further than the lowest horizontal guide line when approaching objects. You may otherwise damage your vehicle and/or the object.

360° camera

FUNCTION OF THE 360° CAMERA

The 360° camera is a system comprising four cameras which cover the immediate vehicle surroundings. The cameras provide support, forexample, when parking or when exits are difficult to see.

THE 360° CAMERA INCLUDES THE FOLLOWING CAMERAS AND EVALUATES THEIR IMAGES:

- Reversing camera
- Front camera
- Two outside mirror cameras

The cameras serve solely as aids and may show a distorted view of obstacles, show them incorrectly or even omit them altogether. They are not a substitute for you having to pay attention to your surroundings. The responsibility for safe manoeuvring and parking remains with the driver at all times. Ensure that there are no persons, animals or objects etc. in the manoeuvring area while manoeuvring and parking.

The following camera perspectives are available in the media display:

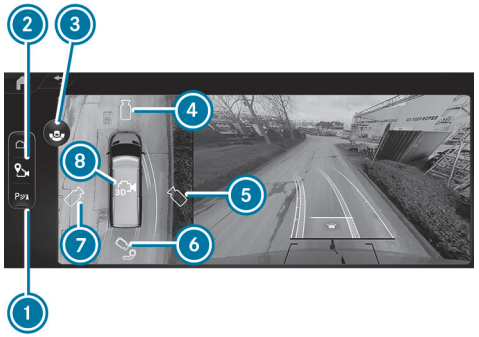

Overview of menu Camera views

1. Activates/deactivates Parking Assist PARKTRONIC
2. Sets the GPS activation point (→ page 420)
3. Switches between standard view and wide-angle view
4. Image from the front camera
5. 3D view right-hand side of vehicle
6. Switches between trailer view (depending on the respective equipment) and reversing camera
7. 3D view left-hand side of vehicle
8. 3D auto view

ⓘ The warning display of Parking Assist PARKTRONIC is shown in all views (→ page 407).

ⓘ Availability of the 3D auto view 8 and 3D view 5, 7 functions is dependent upon the respective equipment.

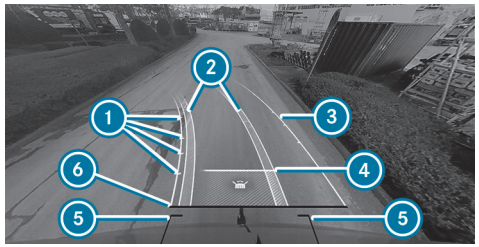

Function of the guide lines (example)

1. Guide lines at a distance of approximately 1.0 m, 1.5 m, 2.0 m and 3.0 m from the rear area
2. Path marking the course the wheels will take with the current steering angle (dynamic)
3. Driven surface depending on the current steering angle (dynamic)
4. Area required (shaded) with guide line to open the rear-end doors completely
5. Red guide lines at a distance of approximately 0.2 m from the rear area, vehicle width including outside mirrors
6. Guide line at a distance of approximately 0.3 m from the rear area

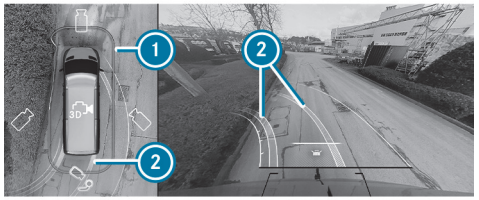

Image from the front camera or reversing camera (example)

1. Warning display of Parking Assist PARKTRONIC (⟶ page 407)
2. Path with the current steering angle

WARNING
Risk of accidents due to objects not being displayed or being displayed as heavily distorted

Due to the projection of the cameras, objects in the 3D views may be heavily distorted or not displayed at all.

- Ensure that there are no persons, animals or objects in the manoeuvring area while manoeuvring and parking.

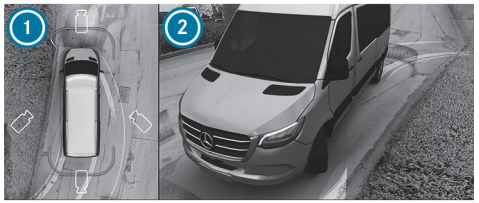

3D view left/right-hand side of the vehicle (example)

1. Top view with warning display of Parking Assist PARKTRONIC
2. Side view of the outside mirror cameras

In the 3D view, left/right-hand side of the vehicle, the virtual camera moves to the respective side of the vehicle 2. When you change the transmission position, the view is automatically adapted. In addition, the top view 1 is shown with the Parking Assist PARKTRONIC warning display.

ⓘ The area behind the vehicle is **not** displayed as a mirror image, as is usual in the 3D views.

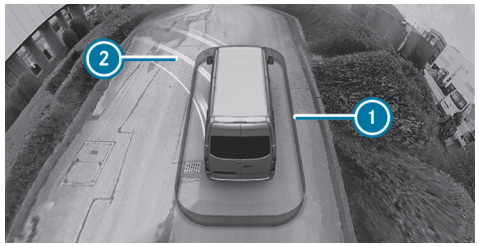

3D auto view (example)

1. Warning display of Parking Assist PARKTRONIC (⟶ page 407)
2. Guide lines

In the 3D auto view, the virtual camera moves to the standard perspective, facing forward from the rear above the roof.

If you touch the touchscreen, the view changes to a 3D view with free rotation. You can turn, tilt and zoom the perspective by touch.

Wide-angle view (example)

1. Activates/deactivates Parking Assist PARKTRONIC
2. Switching between standard view and wide-angle view
3. Warning display of Parking Assist PARKTRONIC (→ page 407)

If the top view with the reversing camera image is displayed, switch to the wide-angle view with the icon 2 indented to the left. When the wide-angle view is displayed, switch back to the respective top view.

If you select the trailer view and no trailer is coupled to the vehicle, the following display appears:

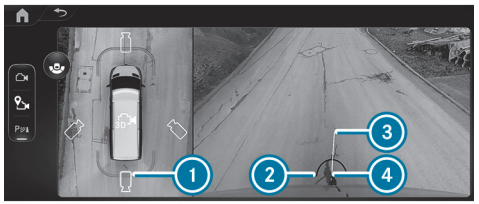

Trailer view (example)

1. Switching between standard view and trailer view
2. Red guide line at a distance of approximately 0.3 m from the ball head of the trailer hitch
3. Yellow guide line, locating aid
4. Ball head of the trailer hitch

In trailer mode, the guide lines are shown at the level of the trailer hitch.

When the electrical connection is established between vehicle and trailer, the display changes to the side camera view.

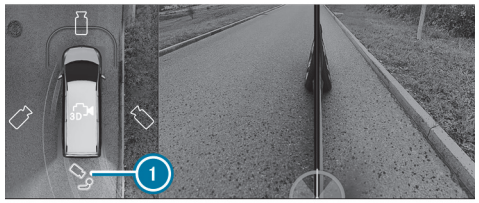

Side view of outside mirror cameras in the trailer view (example)

1. Switches between standard view and trailer view

SYSTEM LIMITS

If the system is not ready for operation, the System inoperative message appears in the media display.

WARNING

Risk of accident due to functional limitations of the 360° camera

If the function of the 360° camera is restricted, there is a risk of collision with persons or objects.

- Do not use the 360° camera in case of functional limitations.
- Ensure that there are no persons, animals or objects etc., in the manoeuvring area while manoeuvring and parking.

THE 360° CAMERA WILL NOT FUNCTION, OR WILL ONLY PARTIALLY FUNCTION IN THE FOLLOWING SITUATIONS, FOR EXAMPLE:

- When you are driving forwards at a speed greater than approx. 16 km/h.
- The doors are open.
- An outside mirror is not completely extended.
- The weather conditions are poor, e.g.heavy rain, snow, fog, storm or spray.
- The light conditions are poor, e.g.at night or if a light is shining into the camera.
- If the camera lens is obstructed, dirty or misted up. Refer to the notes on cleaning the 360° camera (→ page 624).
- If cameras or vehicle components in which the cameras are fitted are damaged. In this case, have the cameras, their position and their setting checked at a qualified specialist workshop.

For technical reasons, the standard height of the vehicle may be altered if the vehicle is carrying a heavy load and this can result in inaccuracies in the guide lines and in the display of generated images.

The field of vision and other functions of the camera system can potentially be restricted due to additional vehicle attachments (e.g.licence plate bracket or bicycle rack.

ⓘ The display contrast may be impaired by sudden, incidental sunlight or other light sources, e.g.when driving out of a garage. Particular attention should be afforded in these conditions.

ⓘ Have the display repaired or replaced if its use is considerably restricted due to pixel errors, forexample.

Observe also the information on vehicle sensors and cameras (→ page 372).

FUNCTION OF THE OFFROAD CAMERA

The offroad camera provides support with various views when driving over rough terrain.

THE FOLLOWING VIEWS ARE AVAILABLE:

- Transparent bonnet
- Front view
- Rear view

Call up the offroad camera in the offroad menu of the multimedia system (→ page 516).

TRANSPARENT BONNET

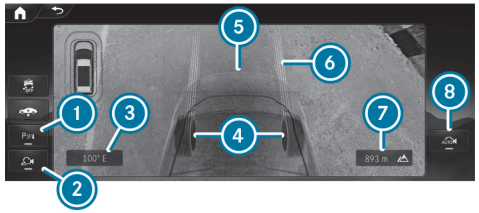

View of the transparent bonnet (example)

1. Activates/deactivates Parking Assist PARKTRONIC (→ page 407)
2. Switches the offroad camera on or off
3. Cardinal point
4. Position of the wheels
5. Area under the bonnet
6. Path with the current steering angle

7 Altitude above sea level
8 Activates/deactivates automatic, speed-dependent switching between the transparent bonnet view and the front view

If the offroad menu is open in the central display and the button 2 is switched on, the transparent bonnet view is automatically displayed in the transmission position D. This shows a virtual image of the area directly in front of the bumper, in front of the wheels and under the bonnet at speeds below approx. 6 km/h to 8 km/h. Additionally, the current travel path is displayed. The transparent bonnet view provides support when driving over difficult terrain, e.g.on rocky or uneven ground.

The front camera captures and records the shaded area under the bonnet 5. This area is then shown as soon as it has been traversed by the vehicle. If the vehicle has not been moved for some time, the recorded area is displayed in greyscale and faded out.

NOTE
Damage caused by obstacles which were not indicated

The transparent bonnet view is generated from images recorded previously by the 360° camera.

These recorded images may therefore possibly deviate from the actual conditions. In the meantime, moving objects may have found their way underneath the vehicle which are not showing up in the current display.

- ► Avoid any obstacles or navigate them with extreme caution.
- ► Adapt the travel speed to the respective conditions.

FRONT AND REAR VIEW

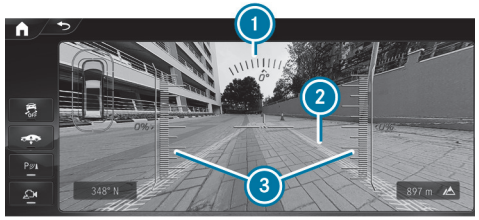

Image of front and rear view (example)

1 Downhill gradient indicator
2 Path with the current steering angle
3 Uphill gradient indicator

ⓘ Please note that in the front view, the area up to approximately 1 m in front of the vehicle is not displayed.
The downhill gradient and uphill gradient displays are only shown in the front view.

If the vehicle is travelling faster than approximately 8 km/h the view automatically changes from transparent bonnet to front view. If the vehicle is travelling faster than approx. 20 km/h - 30 km/h, the camera image will be turned off.

If reverse gear is engaged, the rear view is automatically shown with the image of the reversing camera.

SYSTEM LIMITS

THE AREA UNDER THE BONNET IS NOT DISPLAYED CORRECTLY IN THE FOLLOWING SITUATIONS:

- in the rain
- when driving in the dark

- when shadows fall on the area recorded by the camera

Observe the instructions on the 360° camera's function and its system limits. You may otherwise fail to recognise potential dangers (→ page 414).

CALLING UP THE 360° CAMERA VIEWS USING THE BUTTON

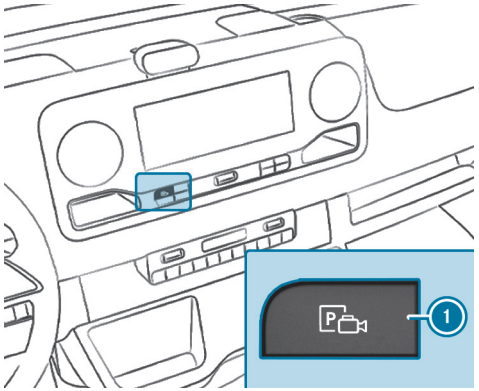

- Press the button 1.
- Select the desired view in the multimedia system (→ page 414).

MANAGING 360° CAMERA WITH GPS-ACTIVATION POSITIONS

Multimedia system:

Settings ▸▸ Assistance ▸▸ Camera

RENAMING AN ACTIVATION POSITION

> ⓘ You can determine activation positions in the Camera views menu (→ page 414).

- Select ••• for the desired activation position.
- Select Edit .
- Enter a name and confirm.
  The activation position is stored under the new name.

DELETING AN ACTIVATION POSITION

- Select ••• for the desired activation position.
- Select Delete entry .
- Confirm the prompt.
  The activation position is deleted.

ATTENTION ASSIST

FUNCTION OF ATTENTION ASSIST

ATTENTION ASSIST assists you on long, monotonous journeys, e.g.on motorways and trunk roads. If signs of fatigue or increasing lapses in concentration on the part of the driver are detected, the system suggests taking a break.

ATTENTION ASSIST serves solely as an aid. It cannot always promptly detect fatigue or lapses in concentration. The system is not a substitute for a well-rested and attentive driver. On long journeys, take regular, timely breaks to allow for adequate recovery.

YOU CAN CHOOSE BETWEEN TWO SETTINGS:

- **Standard:** normal system sensitivity.
- **Sensitive:** higher system sensitivity. The driver is warned earlier and the attention level detected by the system is adapted accordingly.

If fatigue or increasing lapses in concentration are detected, the warning ATTENTION ASSIST: Take a break! appears on the instrument cluster display.

You can acknowledge the message and take a break as necessary. If you do not take a break and ATTENTION ASSIST continues to detect increasing lapses in concentration, you will be warned again after a minimum of 15 minutes.

If ATTENTION ASSIST is unable to calculate the attention level and cannot issue a warning, the System passive message appears.

If the instrument cluster display shows a warning, the multimedia system offers to search for a rest area. You can select a rest area and start navigation to this rest area.

When you restart the vehicle, ATTENTION ASSIST is automatically switched on. The last selected sensitivity level remains stored.

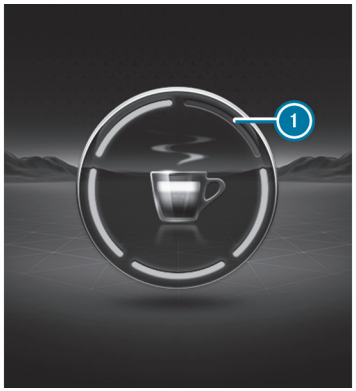

THE FOLLOWING INFORMATION IS SHOWN ON THE INSTRUMENT CLUSTER DISPLAY:

- The length of the journey since the last break
- The attention level determined by ATTENTION ASSIST:
  - The more segments (1) of the circle displayed, the higher the detected attention level.
  - Fewer segments (1) are displayed in the circle as the attention level decreases.

ⓘ Depending on the respective vehicle equipment and country of use, ATTENTION ASSIST features a distraction detection subfunction. This function is only available in conjunction with the driver camera (→ page 503).

DISTRACTION DETECTION

ATTENTION ASSIST can use the driver camera to detect when the driver is distracted by averting his or her gaze from the road ahead.

If the system detects driver distraction, the white Remain alert! message appears after a few seconds and a warning tone sounds. If the driver does not turn their attention back to the traffic situation, the message will be displayed repeatedly.

STATUS DISPLAY OF ATTENTION ASSIST

Yellow: Distraction detection is malfunctioning. Pay attention to the display messages.

Yellow: The system is not available. Pay attention to the display messages.

White: The system is switched off (country-dependent).

SYSTEM LIMITS

- ATTENTION ASSIST is active in the 60 km/h to 200 km/h speed range.
- The distraction detection subfunction is available from approx.20 km/h.

THE FUNCTIONALITY OF ATTENTION ASSIST IS RESTRICTED, AND WARNINGS MAY BE DELAYED OR NOT ISSUED AT ALL IN THE FOLLOWING SITUATIONS IN PARTICULAR:

- If you have been driving for less than approximately 30 minutes.
- If the road condition is poor (uneven road surface or potholes).

- If there is a strong side wind.
- If you adopt a sporty driving style (high cornering speeds or high rates of acceleration).
- If the Active Steering Assist function of Active Distance Assist DISTRONIC is active.
- If the clock is set to the incorrect time.
- If you change lanes and vary your speed frequently in active driving situations.
- If ESP® is not available

DISTRACTION DETECTION WILL ALSO NOT FUNCTION IF THE DRIVER CAMERA CANNOT DETECT THE EYES OF THE DRIVER, DUE TO THE FOLLOWING FACTORS, FOREXAMPLE:

- the driver's eyes cannot be detected due to the steering column position, for example
- poor lighting conditions
- certain types of spectacles or sunglasses
- the driver's line of vision is outside the driver camera's field of vision

Refer to the information regarding display messages that can be shown on the instrument cluster display.

THE ATTENTION ASSIST DROWSINESS OR ALERTNESS ASSESSMENT IS RESET AND RESTARTED WHEN CONTINUING THE JOURNEY IN THE FOLLOWING SITUATIONS:

- You switch off the vehicle.
- You unfasten your seat belt and open the driver's door (e.g.to change drivers or take a break).

SET ATTENTION ASSIST

Multimedia system:

Settings ▶▶ Assistance ▶▶ Assistance ▶▶ ATTENTION ASSIST

▶ Activate or deactivate the function.

SETTING OPTIONS

▶ Select Standard, Sensitive or Off.

SUGGESTING A REST AREA

▶ Select Suggest rest area.

▶ Activate or deactivate the function.

If ATTENTION ASSIST detects fatigue or increasing lapses in concentration, the system suggests a nearby rest area.

Traffic Sign Assist

FUNCTION OF TRAFFIC SIGN ASSIST

Traffic Sign Assist records the traffic sign with the multifunction camera and compares it with information from a digital street map in the multimedia system. It assists you by showing detected speed restrictions and no-overtaking zones on the instrument cluster display.

The system can issue a warning when you exceed the maximum permissible speed.

In some countries, the system can provide you with further functions and can warn you when you are approaching pedestrian crossings. If the system detects that you are driving onto a section of road in the wrong direction of travel, it triggers a warning.

The camera also detects and evaluates traffic signs with a restriction indicated by an additional sign (e.g.in wet conditions).

Traffic Sign Assist only portrays selected signs on the instrument cluster display. Actual traffic signs and speed restrictions always take priority over the traffic signs and speed restrictions shown on the display.

NOTES ON TRAILER OPERATION

ⓘ Observe also the notes on trailer operation (⟶ page 441).

If a trailer or bicycle rack is connected correctly, the media display shows the query concerning the type of trailer and its respective maximum permissible speed .

It is the responsibility of the driver to manually adapt the maximum permissible speed in the respective small or large trailer – category –.

IN PARTICULAR, COUNTRY-SPECIFIC LAWS MUST BE TAKEN INTO ACCOUNT, E.G.REGARDING:

- maximum design speed or maximum permissible speed for which the vehicle is approved
- permissible gross mass with or without towing vehicle
- required number of years with a corresponding driving licence
- type and condition of the road being travelled
- the weather conditions

The maximum permissible speed adapted to the vehicle/trailer combination can be adopted in the manual or automatic speed transfer during the journey (depending on the respective equipment).

On the system side, relevant additional signs for speed restrictions and clear road category traffic rules can be considered for the vehicle/trailer combination (depending on the respective country of use).

No maximum permissible speed can be selected for a bicycle rack in the multimedia system. When using a bicycle rack, observe the specifications for the maximum permissible speed in the manufacturer's operating instructions.

THE FOLLOWING INFORMATION SHOULD ALSO BE OBSERVED:

- Select a speed adapted to the traffic, surroundings and weather conditions.
- Observe actual traffic signs.
- Observe applicable traffic rules and regulations.

Observe the information on driving systems and be aware of your personal responsibility, otherwise you may fail to recognise potential dangers (⟶ page 372).

NOTIFICATIONS ON THE INSTRUMENT CLUSTER DISPLAY

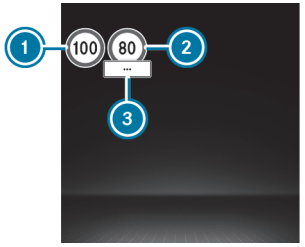

1. Permissible speed
2. Permissible speed when there is a restriction
3. Additional sign with a restriction

The system can show up to two traffic signs on the instrument cluster display simultaneously. The system always prioritises displaying speed restrictions. If two speed signs are shown on the instrument cluster display, e.g.with detected restrictions, the value of the speed restriction on the left 1 is always relayed to the cruise control or to Active Distance Assist DISTRONIC.

Important information from other systems can cause traffic signs to be hidden for a short time.

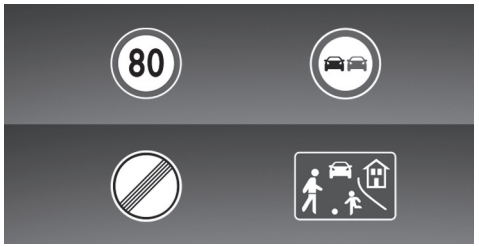

Examples of traffic signs which can be displayed

TRAFFIC SIGN ASSIST CAN DETECT AND DISPLAY THE FOLLOWING TRAFFIC SIGNS ①:

- speed restrictions
- end of the speed restriction
- overtaking restrictions
- play streets
- depending on the respective country of use: signs showing the start or end of motorways and dual carriageways

TRAFFIC SIGN ASSIST CAN DETECT THE FOLLOWING ADDITIONAL SIGNS ③ AND EVALUATE RELEVANCE OF THE RESTRICTIONS WHERE NECESSARY USING AUXILIARY VEHICLE SENSORS:

- in wet conditions
- slippery road surfaces
- in fog
- temporary restrictions
- exits
- restrictions for vehicle/trailer combinations

Traffic Sign Assist also uses the data from a digital street map in the multimedia system. When you pass a town or city boundary or move from one road onto another, e.g.when joining or exiting a motorway, or when turning at a crossroads, this means that the view on the instrument cluster display can also be updated without a traffic sign having been detected.

ⓘ Update the digital street map of the multimedia system regularly to ensure optimum functionality of Traffic Sign Assist (⟶ page 49).

If Traffic Sign Assist cannot determine the current maximum permissible speed, e.g.due to absent signage, the following notification appears on the instrument cluster display:

Traffic Sign Assist is not available in all countries. This display is shown permanently in the vehicle when travelling in countries which do not support Traffic Sign Assist.

If Traffic Sign Assist is temporarily or permanently unavailable due to a technical fault or soiling of the windscreen, a corresponding message appears on the instrument cluster display and the Traffic Sign Assist warning lamp lights up.

ⓘ Please also note the information pertaining to display messages for Traffic Sign Assist (⟶ page 761).

WARNING WHEN THE MAXIMUM PERMISSIBLE SPEED IS EXCEEDED
The system can warn you if you are about to exceed the detected maximum permissible speed. Depending on the respective country of use, you can set how much the maximum permissible speed may be exceeded in the multimedia system before a warning is issued. You can select in the settings whether the warning should be issued visually, with the traffic sign flashing on the instrument cluster display, or as a combination of visual and audible warning. Selection of the warning type is confirmed by way of notification on the instrument cluster display.

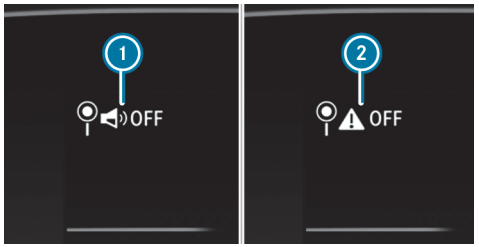

1 Visual warning only
2 Warning off

> The type, duration and deployment stages of the speed warning, as well as the option of setting the timing of the deployment stages upon which the warning is issued, are subject to legislation valid for the respective country in which the vehicle is delivered.

ADDITIONAL FUNCTIONS OF TRAFFIC SIGN ASSIST (COUNTRY-SPECIFIC)
Warning for no-entry signs: Traffic Sign Assist can warn you if you drive down a section of road in the wrong direction of travel, forexample, on motorway slip roads or one-way streets.

Warning at pedestrian crossings: When you approach pedestrian crossings and pedestrians are in the danger zone or are moving towards it, Traffic Sign Assist can warn you up to a travel speed of approximately 70 km/h.

SYSTEM LIMITS

THE SYSTEM MAY BE IMPAIRED OR INOPERATIVE IN THE FOLLOWING SITUATIONS IN PARTICULAR:

- if visibility is poor, e.g.due to insufficient illumination of the road, highly variable shade conditions, rain, snow, fog, swirling dust or heavy spray
- if there is glare, e.g.from oncoming traffic, direct sunlight or reflections
- if there is dirt on the windscreen in the vicinity of the multifunction camera or if the camera is misted up, damaged or covered
- if the traffic signs are difficult to see because, forexample, they are dirty, obscured, faded, iced over, damaged, inconveniently positioned, insufficiently illuminated or askew
- active traffic signs with LED displays may not be detected correctly, or even at all due to technical factors, suchas transmission frequency
- if the information in the digital street map of the multimedia system is inaccurate or incomplete, or has not been updated
- if the signs, road markings or road layout are ambiguous, e.g.traffic signs at road works, at exits and slip roads, adjacent lanes or parallel roads, and pedestrian crossing markings at traffic lights
- if the signage or road markings do not comply with the standard
- if the signage, road markings or road guidance are country-specific and deviate from the navigation system's route guidance, e.g.at or after road works
- after sharp turns and in tight bends, when traffic signs are outside the camera's field of vision
- if you overtake vehicles with traffic signs which are affixed or attached to them

- if you use transport equipment secured to the vehicle with a trailer coupling, suchas a bicycle rack, restrictions for vehicle/trailer combinations may be deemed applicable
- if special restrictions as a vehicle/trailer combination apply for certain approval types which the system cannot determine or recognise
- in country-specific vehicle classes for which requirements for the maximum permissible speed have been modified

SETTING TRAFFIC SIGN ASSIST

Multimedia system:

Settings ▶▶ Assistance ▶▶ Assistance ▶▶ Traffic Sign Assist

ACTIVATING OR DEACTIVATING THE SPEED WARNING

ⓘ The speed warning is switched on by default (depending on the respective country of use).

▶ Switch off Speed limit warning.

Following country-specific legislation, the speed warning remains deactivated until the next time the vehicle is switched on or off.

ⓘ The audible speed warning can also be switched on and off via quick-access by pressing and holding the mute button on the steering wheel, by pressing the speed icon in the status line of the media display or via voice command (availability of these functions is country-dependent).

CHANGING THE TYPE OF SPEED WARNING

▶ Change the warning to Visual or Visual & audible.

SETTING THE WARNING THRESHOLD

This value determines the speed at which a warning is issued when exceeded.

▶ Set the desired speed under Warning Threshold.

ⓘ Availability of the function is subject to country-specific legislation.

SWITCHING THE ACOUSTIC SIGNAL FOR A NEW MAXIMUM PERMISSIBLE SPEED ON OR OFF

ⓘ The acoustic signal for a new maximum permissible speed is switched off at the factory.

The function determines whether a subtle, non-intrusive sound supports each change of the displayed speed in the instrument cluster.

▶ Activate or deactivate the function.

ⓘ Availability of the function is dependent on the respective country of use.

Manoeuvring assistant

DRIVE AWAY ASSIST FUNCTION

ⓘ Drive Away Assist is only available for vehicles with automatic transmission.

ⓘ In the variant without rear sensors, Drive Away Assist only works in the forward direction of travel (→ page 407).

Drive Away Assist can reduce the severity of a collision when pulling away. If an obstacle is detected in the direction of travel, the vehicle's speed is briefly reduced to approximately 2 km/h. The symbol appears in the media display if a critical situation is detected.

WARNING
Risk of accident caused by limited detection performance of Drive Away Assist

Drive Away Assist cannot always clearly identify objects and traffic situations.

- Always pay careful attention to the traffic situation; do not rely on Drive Away Assist alone.
- Be prepared to brake or swerve as necessary, provided the traffic situation permits and that it is safe to take evasive action.

Drive Away Assist serves solely as an aid. It is not a substitute for you having to pay attention to your surroundings. The responsibility for safe manoeuvring, parking and exiting parking spaces remains with you. Ensure that no persons, animals, objects, etc. are in the vehicle path.

A RISK OF COLLISION MAY ARISE IN THE FOLLOWING SITUATIONS, FOREXAMPLE:

- Accelerator pedal or brake pedal is inadvertently actuated in place of the other.
- If an incorrect transmission position is engaged.

THE DRIVE AWAY ASSIST FUNCTION IS ACTIVE UNDER THE FOLLOWING CONDITIONS:

- Parking Assist PARKTRONIC is activated (→ page 409).
- Each time the transmission position is changed to R or D with the vehicle at a standstill
- If the detected obstacle is less than approximately 1.0 m away.
- The manoeuvring assistant function is activated (→ page 429).

SYSTEM LIMITS
Drive Away Assist is unavailable on uphill gradients and when driving with a trailer.

In the variant without rear sensors, Drive Away Assist only works in the forward direction of travel.

If a transport device, e.g. trailer or bicycle rack, is attached to the trailer hitch and the electrical connection is correctly established, Drive Away Assist is not available.

Observe also the system limits of Parking Assist PARKTRONIC (→ page 407).

FUNCTION OF CLOSE-RANGE BRAKING
Close-range braking can prevent collisions with pedestrians when the vehicle is reversing at slow speeds. If the reversing camera detects a person in the vehicle's path, the vehicle can be braked to a standstill.

CLOSE-RANGE BRAKING CAN INTERVENE UNDER THE FOLLOWING CONDITIONS:

- The vehicle is reversing at a speed slower than 10 km/h.

- The camera image is shown on the media display.

When close-range braking is triggered, the symbol appears in red in the selected view in the Camera & parking menu.

ⓘ If close-range braking is not available, the symbol appears in grey.

Close-range braking serves solely as an aid. It is not a substitute for you having to pay attention to your surroundings. The responsibility for safe manoeuvring, parking and exiting parking spaces remains with you at all times. Ensure that no persons, animals, objects, etc. are in the vehicle path.

⚠ **WARNING**
Risk of accident caused by limited detection by the manoeuvring brake function

The manoeuvring brake function cannot always clearly detect people. Other obstacles are not detected by the function.

In these cases, the function may brake unnecessarily or not brake at all.

▶ Always pay careful attention to the traffic situation; do not rely on the manoeuvring brake function alone.

▶ Be ready to brake.

SYSTEM LIMITS

OBSERVE THE SYSTEM LIMITS OF THE FOLLOWING FUNCTIONS:

- Parking Assist PARKTRONIC (⟶ page 407)
- 360° camera (⟶ page 414)
- Reversing camera (⟶ page 410)

THE CLOSE-RANGE BRAKING FUNCTION IS NOT AVAILABLE IN THE FOLLOWING SITUATIONS:

- on uphill gradients
- if transport equipment, e.g.a trailer or bicycle rack, is attached to the trailer hitch and the electrical connection has been correctly established

REAR CROSS TRAFFIC ALERT

Function of Rear Cross Traffic Alert

ⓘ The Rear Cross Traffic Alert function is only available for closed vehicles, e.g.panel vans with Blind Spot Assist.

The Rear Cross Traffic Alert function can warn drivers of any crossing traffic when reversing and manoeuvring out of a parking space. The radar sensors in the bumper also monitor the area adjacent to the vehicle. If a vehicle is detected, the warning lamp in the outside mirror on the corresponding side lights up red. If a critical situation is detected, a warning tone also sounds.

Vehicles with Parking Assist PARKTRONIC: If a critical situation is detected, the symbol also appears on the media display and the vehicle can be braked automatically. In this case, a warning tone sounds.

If the radar sensors are obscured by vehicles or other objects, detection is not possible.

THE REAR CROSS TRAFFIC ALERT FUNCTION IS ACTIVE UNDER THE FOLLOWING CONDITIONS:

- Blind Spot Assist is activated (⟶ page 430).

- Vehicles with Parking Assist PARKTRONIC: The rear cross traffic warning is activated (⟶ page 429).
- If the vehicle is reversing at walking pace.

ⓘ Observe also the instructions on Blind Spot Assist (⟶ page 429).

SYSTEM LIMITS
The Rear Cross Traffic Alert function is not available on uphill gradients.

If a transport device, suchas a trailer or bicycle rack, is attached to the trailer hitch and the electrical connection is correctly established, the Rear Cross Traffic Alert function is not available.

Setting Rear Cross Traffic Alert

Multimedia system:

Settings ▶▶ Assistance ▶▶ Parking

▶ Select Manoeuvring assistance.

▶ Activate or deactivate the desired manoeuvring assistant.

Blind Spot Assist

FUNCTION OF BLIND SPOT ASSIST
Blind Spot Assist uses two lateral, rear-facing radar sensors to monitor the area up to 40 m behind and 3 m next to your vehicle.

If a vehicle is detected above speeds of approximately 12 km/h and this vehicle subsequently enters the monitored range directly next to your vehicle, the warning lamp in the outside mirror lights up red.

STATUS INDICATOR ON THE DISPLAY OF THE INSTRUMENT CLUSTER

Grey: the system is activated but inoperative.

Green: the system is activated and operational.

If a vehicle is detected close to your vehicle and you switch on the turn signal indicator in the corresponding direction, a double warning tone sounds and the red warning lamp in the outside mirror flashes. If the turn signal indicator remains switched on, the double warning tone sounds once for every detected vehicle.

If you overtake a vehicle briskly, no warning is given.

⚠ **WARNING**
Risk of accident despite Blind Spot Assist

Blind Spot Assist does not react to either stationary objects or vehicles approaching and overtaking you at a greatly different speed.

Blind Spot Assist cannot warn drivers in these situations.

▶ Always pay careful attention to the traffic situation and maintain a safe distance at the side of the vehicle.

Observe the information on driving systems and be aware of your personal responsibility, otherwise you may fail to recognise potential dangers (⟶ page 372).

EXIT WARNING
The exit warning is an additional function of Blind Spot Assist and can warn vehicle occupants of any approaching vehicles when leaving the stopped vehicle.

WARNING
Risk of accident despite exit warning

The exit warning neither reacts to stationary objects nor to persons or road users approaching you at a greatly differing speed.

The exit warning cannot warn drivers in these situations.

► Always pay particular attention to the traffic situation when opening the doors and make sure there is sufficient clearance.

If a vehicle is detected in the monitoring range, the warning lamp in the outside mirror lights up. If a vehicle occupant opens the front door on the side subject to a warning, a warning tone sounds and the warning lamp in the outside mirror starts to flash. An exit warning is not issued for the sliding doors.

This additional function is only available when Blind Spot Assist is switched on. The exit warning can warn you from switching on up to a maximum of three minutes after switching off the vehicle. The end of the availability of the exit warning function is indicated by three flashes of the warning lamp in the outside mirror.

The exit warning is only an aid and is no substitute for the attentiveness of the vehicle occupants. Responsibility always lies with the vehicle occupants when opening doors and leaving the vehicle.

SYSTEM LIMITS

BLIND SPOT ASSIST MAY IN PARTICULAR BE LIMITED IN THE FOLLOWING SITUATIONS:

- if the sensors are soiled or obscured
- if there is poor visibility, e.g. owing to fog, heavy rain, snow or spray
- if narrow vehicles are within the monitored range, e.g. bicycles
- if the road has very wide or very narrow lanes
- if vehicles are not driving in the middle of their lane

Observe also the information on vehicle sensors and cameras (→ page 372).

Warnings may be issued in error when driving close to crash barriers or similar solid lane borders. Always ensure that there is a sufficient distance at the side to other road users or obstacles.

Warnings may be interrupted when driving alongside long vehicles for an extended time, e.g. trucks.

Blind Spot Assist is not operational when reverse gear is engaged.

If transport equipment, e.g. a trailer or bicycle rack, is attached to the trailer hitch and the electrical connection has been correctly established, Blind Spot Assist and the exit warning are only available to a limited extent.

THE EXIT WARNING FUNCTION MAY BE LIMITED IN THE FOLLOWING SITUATIONS:

- when the sensor is blocked by adjacent vehicles in narrow parking spaces
- when people are approaching
- in the case of stationary or slow-moving objects

ACTIVATING/DEACTIVATING BLIND SPOT ASSIST

Multimedia system:

→ ⌂ ▸▸ Settings ▸▸ Assistance ▸▸ Collision avoidance

► Activating / deactivating Blind Spot Assist.

Sideguard Assist

FUNCTION OF SIDEGUARD ASSIST

When turning off or changing lanes, Sideguard Assist can issue a warning if there is a risk of collision with moving objects in the monitored area on the co-driver's side.

Sideguard Assist is always active after starting the vehicle. You can only manually deactivate the acoustic warning signal of Sideguard Assist (⟶ page 432). The acoustic warning signal becomes active again when you restart the vehicle.

WARNING
Risk of accident due to limitations of Sideguard Assist in the detection of objects and traffic conditions

SIDEGUARD ASSIST CANNOT ALWAYS CLEARLY IDENTIFY OBJECTS AND COMPLEX TRAFFIC SITUATIONS. IN SUCH CASES, SIDEGUARD ASSIST MAY:

- issue an unnecessary warning
- not issue a warning

▶ Drive on carefully and be ready to brake, particularly if the system issues a warning.

▶ Always pay careful attention to the traffic situation and maintain a safe distance at the side of the vehicle.

ⓘ Sideguard Assist warns you of objects moving at up to 40 km/h in the monitored area on the co-driver's side.

ⓘ Sideguard Assist warns you if your own vehicle speed is up to a maximum of 30 km/h.

ⓘ No warnings are issues for moving pedestrians or objects in the monitored area.

ⓘ Sideguard Assist is not a parking assistance system.

MONITORED SIDE AREA

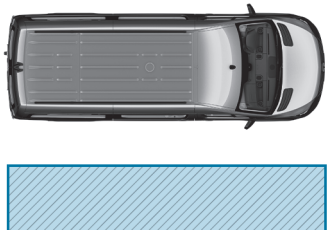

- The warning area extends along the entire vehicle length.
- The width of the warning area is approx. 3.5 m (12 ft)

SYSTEM LIMITS

There may be unwarranted system responses when driving a left-hand drive vehicle in left-hand traffic or a right-hand drive vehicle in right-hand traffic. Switch off the acoustic warning signal of Sideguard Assist.

Sideguard Assist may be impaired or inoperative in the following situations in particular.

SYSTEM-RELATED:

- Sideguard Assist is not active while reversing.

- When driving with a trailer, the function is only available to a limited extent.
- Due to the system characteristics, warnings may be interrupted when you are driving alongside particularly long vehicles, for example lorries, for a prolonged time.

SITUATION-RELATED:

- Objects are concealing pedestrians or cyclists.
- Pedestrians or cyclists suddenly change their direction or speed.
- Persons or vehicles move rapidly into the detection range of the sensors.
- Objects are moving at the same speed as your own vehicle.
- Multi-lane-change from the overtaking lane.
- Soiling, ice, snow, stickers, decals or detachable parts are obscuring the sensors.

ⓘ Sensors must not be painted over.

ENVIRONMENT-RELATED:

- on very wide lanes
- if the lanes are very narrow and winding
- in the case of sensor interference, e.g. caused by severe, unfavourable radar reflection from guardrails or other infrastructure

IN THE FOLLOWING CASES IN PARTICULAR, HAVE THE FUNCTION OF THE RADAR SENSORS CHECKED AT A QUALIFIED SPECIALIST WORKSHOP:

- After a severe impact
- After damage to the side trim

SWITCHING WARNING TONES FROM SIDEGUARD ASSIST ON OR OFF

Multimedia system:

Settings ▶▶ Assistance ▶▶ Collision avoidance

▶ Switch the warning tones on or off.

Sideguard Assist is always active. The function cannot be manually deactivated. The active function is not shown in the instrument cluster display.

DISPLAY IN THE INSTRUMENT CLUSTER:

- Warning tone was deactivated manually.

  If there is a risk of collision, only the red triangle in the outside mirror is shown.
- System is temporarily or permanently switched off owing to a system malfunction e.g. soiled sensors.

  In addition, the Sideguard Assist Inoperative display message may appear.

  Further information on system limits: (→ page 431).

WARNING BY SIDEGUARD ASSIST

OBJECT DETECTED IN THE MONITORING RANGE

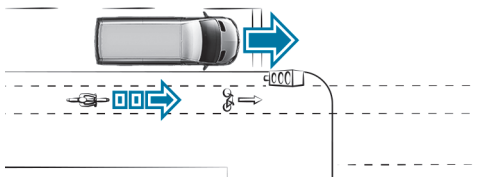

Example: left-hand drive vehicle

A MOVING OBJECT IS DETECTED IN THE MONITORED AREA:

- The red ▲ warning symbol lights up in the right outside mirror.

RECOGNISED RISK OF COLLISION

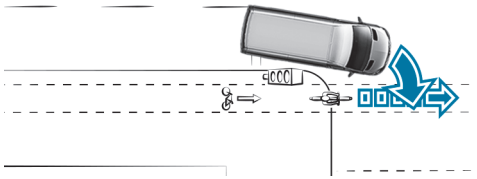

Example: left-hand drive vehicle

A RISK OF COLLISION IS RECOGNISED WHEN THE TURN SIGNAL INDICATORS ARE SWITCHED ON:

- The red ▲ warning symbol flashes in the right outside mirror.
- An audible warning is given.

FOR THE FOLLOWING REASONS, A WARNING MAY NOT BE GIVEN DESPITE A RISK OF COLLISION ON THE CO-DRIVER'S SIDE:

- Sideguard Assist has failed or there is a malfunction.
- The acoustic warning signal of Sideguard Assist has been manually deactivated.
  If there is a risk of collision, the red ▲ warning symbol continues to be shown in the outside mirror.

Start-off Information Assist

FUNCTION OF MOVING-OFF INFORMATION ASSIST

The function monitors a certain area ① and gives a warning if there are e.g. cyclists or pedestrians in this area. The area is generated and defined depending on the steering angle of the vehicle.

Monitored area

Monitored area (example)

Moving-off information Assist may be impaired or inoperative in the following situations in particular.

SYSTEM-RELATED:

- Moving-off information Assist is not active while reversing.

SITUATION-RELATED:

- Objects are concealing pedestrians or cyclists.
- Pedestrians or cyclists suddenly change their direction or speed.
- Persons or vehicles move rapidly into the detection range of the sensors.
- Objects are moving at the same speed as your own vehicle.
- Soiling, ice, snow, stickers, decals or detachable parts are obscuring the sensors.

ⓘ Sensors must not be painted over.

ENVIRONMENT-RELATED:

- If the sensors are impaired e.g. by severe or unfavourable radar reflection from guardrails or other infrastructure

ESPECIALLY IN THE FOLLOWING CASES, HAVE THE FUNCTION OF THE SENSORS CHECKED AT A QUALIFIED SPECIALIST WORKSHOP:

- After a severe impact
- After damage to the side trim

ACTIVATING/DEACTIVATING MOVING-OFF INFORMATION ASSIST

Multimedia system:

Settings ▶▶ Assistance

▶ Activate or deactivate the function.

ⓘ Moving-off information Assist is always active. The function can only be deactivated manually for the current vehicle start.

If the warning lamp is on, Moving-off information Assist is deactivated.

The Moving-off information Assist inoperative message may also appear.

WARNING BY MOVING-OFF INFORMATION ASSIST

MOVING OBJECT IS DETECTED IN THE MONITORED AREA:

- The yellow warning symbol lights up in the instrument cluster.

SENSOR IS SOILED:

- The yellow warning symbol lights up in the instrument cluster.

RISK OF COLLISION IS DETECTED:

- The red warning symbol lights up in the instrument cluster.
- An audible warning is given.

FOR THE FOLLOWING REASONS, A WARNING MAY NOT BE GIVEN DESPITE A RISK OF COLLISION:

- Moving-off information Assist has failed or there is a malfunction.

Active Lane Keeping Assist

FUNCTION OF ACTIVE LANE KEEPING ASSIST

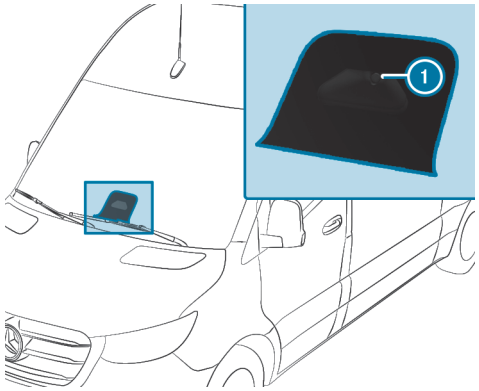

Active Lane Keeping Assist monitors the area ahead of your vehicle with the multifunction camera (1) and can protect you from unintentionally leaving your lane. The system can guide you back into your lane with course-correcting steering interventions, and also warn you with tangible steering wheel feedback.

Active Lane Keeping Assist is available at speeds above approximately 60 km/h.

THE SYSTEM CAN INTERVENE UNDER THE FOLLOWING CONDITIONS:

- Active Lane Keeping Assist detects a lane marking.
- A front wheel of your vehicle moves onto this lane marking.

If you activate the turn indicator, no steering intervention takes place on the relevant side.

If you leave your lane without activating the turn signal indicator, but the risk of collision with a moving obstacle in your own lane is detected, there is no steering intervention.

Vehicles with Blind Spot Assist: if the system detects an obstacle, e.g. another vehicle in the adjacent lane, steering intervention takes place despite the turn indicators.

DEPENDING ON THE COUNTRY, ACTIVE LANE KEEPING ASSIST CAN ALREADY REACT IN THE FOLLOWING SITUATIONS FROM A SPEED OF APPROXIMATELY 45 KM/H:

- If your own vehicle is overtaken by another road user and a risk of collision is detected, there is course-correcting steering intervention.
- If a recognised lane marking is crossed, a warning is given by tangible feedback from the steering wheel.

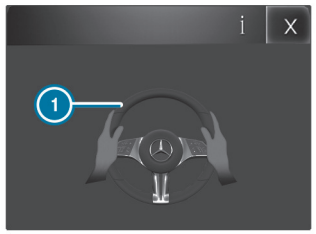

IN THE FOLLOWING CASES SYMBOL ① APPEARS IN THE INSTRUMENT CLUSTER DISPLAY AND A WARNING TONE SOUNDS:

- A steering intervention by Active Lane Keeping Assist lasts longer than approx. ten seconds.
- There are two or more steering interventions by the system within approx. three minutes, without steering intervention by the driver.

You can set the sensitivity of the system in the settings of Active Lane Keeping Assist to determine the level of support required. You can also determine whether the system is to react to interrupted or only to solid lane markings (→ page 436).

ACTIVE LANE KEEPING ASSIST STATUS DISPLAYS

White: Active Lane Keeping Assist is switched off.

If ESP® is switched off or a tyre pressure loss warning appears, Active Lane Keeping Assist is automatically switched off.

Yellow: there is a malfunction. Also observe any messages on the display.

Grey: Active Lane Keeping Assist is switched on but not ready.

Green: Active Lane Keeping Assist is switched on and ready. If the system is only available on one side, only the lane marking on that side is shown in green.

Red: Active Lane Keeping Assist has guided you back into your lane with a course-correcting steering intervention. The status display flashes if there is also a tangible warning at the steering wheel. Only the lane marking on the side for which the warning was issued is shown in red.

DISPLAY OF ACTIVE LANE KEEPING ASSIST IN THE ASSISTANCE MENU

If a front wheel moves onto a detected lane marking, this is highlighted in red on the instrument cluster display in the Assistance menu.

SYSTEM LIMITS

IN THE FOLLOWING SITUATIONS THERE MAY BE NO COURSE-CORRECTING STEERING INTERVENTION, BUT POSSIBLY A TANGIBLE WARNING IN THE STEERING WHEEL:

- if you actively steer, brake or accelerate
- if a driving safety system intervenes, such as ESP®, Active Brake Assist or Blind Spot Assist.
- if you have adopted a sporty driving style with high cornering speeds or high rates of acceleration
- if transport equipment, e.g. a trailer or bicycle rack, is attached to the trailer coupling and the electrical connection has been correctly established.

THE SYSTEM MAY BE IMPAIRED OR INOPERATIVE IN THE FOLLOWING SITUATIONS IN PARTICULAR:

- if there is poor visibility, e.g. due to insufficient illumination of the road, highly variable light/shadow conditions, rain, snow, fog or heavy spray.
- if there is glare, e.g. from oncoming traffic, direct sunlight or from reflections.
- if there is dirt on the windscreen in the vicinity of the multifunction camera or if the camera is misted up, damaged or covered.
- if the bumper is soiled in the area of the radar sensors, or if these are damaged or covered
- if there are no lane markings, or several unclear lane markings are present for one lane, e.g. around roadworks
- if the lane markings are worn away, dark or covered
- if the distance to the vehicle in front is too short and the lane markings cannot be detected
- if the lane markings change quickly, e.g. lanes branch off, cross one another or merge
- if the lanes are very narrow and winding

Observe the notes on driving systems and your responsibility. You may otherwise fail to recognise potential dangers.(→ page 372)

ACTIVATING/DEACTIVATING ACTIVE LANE KEEPING ASSIST

Multimedia system:

→ [⌂] ▸▸ Settings ▸▸ Assistance

▶ Select Collision avoidance.

▶ Activate or deactivate the function.

SETTING ACTIVE LANE KEEPING ASSIST

Multimedia system:

→ [⌂] ▸▸ Settings ▸▸ Assistance ▸▸ Collision avoidance ▸▸ Active Lane Keeping Assist

SETTING SENSITIVITY

▶ Select [⚙].

▶ Select Early, Med. or Late.

The most recently selected setting will be adopted the next time the vehicle is started.

ⓘ The standard setting for this function depends on the country.

ACTIVATING OR DEACTIVATING ASSISTANCE WITH BROKEN LANE MARKINGS

► Select Advanced support.

The most recently selected setting will be adopted the next time the vehicle is started.

ⓘ The standard setting for this function depends on the country.

Work mode

Activating/deactivating power take-off

OBSERVE THE FOLLOWING NOTES:

- If there is severe strain on the power take-off, e.g. due to high power draw at high outside temperatures, the transmission oil temperature may increase to impermissible levels. In this case, operate the power take-off at regular intervals for about five to ten minutes under partial load.
- Activate the power take-off only when the vehicle is stationary and the transmission is in neutral.
- Make sure that the engine speed does not exceed 2500 rpm during operation.
- In vehicles with shift lock, the manual transmission will be disabled when the power take-off is switched on.
- You can engage first or second gear and drive after activating power take-off in vehicles without shift lock. Do not change gear while the vehicle is in motion when power take-off is activated. Therefore, pull away in first or second gear depending on the desired speed.

▶ Observe the notes in the manufacturer's Owner's Manual before using the power take-off in conjunction with the add-on equipment.

TO ACTIVATE

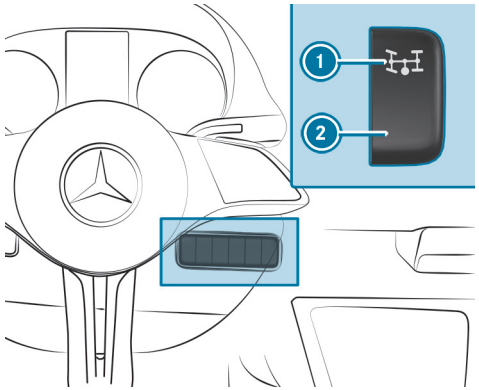

▶ Stop the vehicle and shift the transmission to neutral.

▶ Depress the clutch pedal.

▶ Wait about five seconds and, with the vehicle running, press the upper section of switch 1.

▶ Release the clutch pedal.

In vehicles with a working speed governor (ADR), the engine speed will automatically increase to a preset engine speed or an engine speed you have set – the constant engine speed. The Working speed control active and Power take-off engaged messages will be shown on the instrument cluster display.

TO DEACTIVATE

- Stop the vehicle and shift the transmission to neutral.
- Depress the clutch pedal.
- Wait about five seconds and, with the vehicle running, press the lower section of switch ②.
- Release the clutch pedal.

ADR (working speed control)

FUNCTION OF ADR (WORKING SPEED CONTROL)

When activated, ADR automatically increases the engine speed to a preset speed or a speed that you can set.

> ⓘ After a cold start, the idle speed of the engine is increased automatically. If the preset working speed is lower than the increased idle speed, the working speed is reached only once the engine has completed the warm-up phase.
> ADR can be activated only when the vehicle is stationary and the parking brake is applied.
> In vehicles with automatic transmission, the selector lever must be in position P.

ACTIVATING/DEACTIVATING ADR

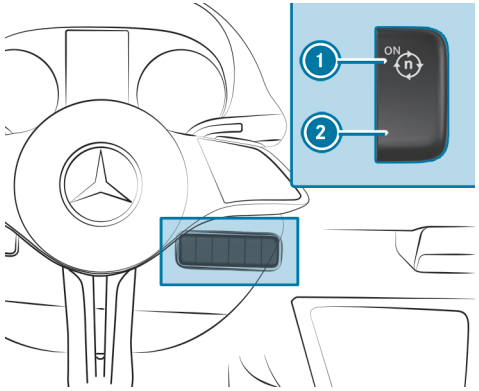

- **To activate:** press switch ① while the vehicle is running.
  The message Working speed control active appears in the instrument cluster.
- **To deactivate:** press switch ② while the vehicle is running.

THE ADR WILL DEACTIVATE AUTOMATICALLY IN THE FOLLOWING SITUATIONS:

- You release the parking brake.
- You depress the brake pedal.
- The vehicle moves.
- The control unit detects a malfunction.

ADJUSTING ADR

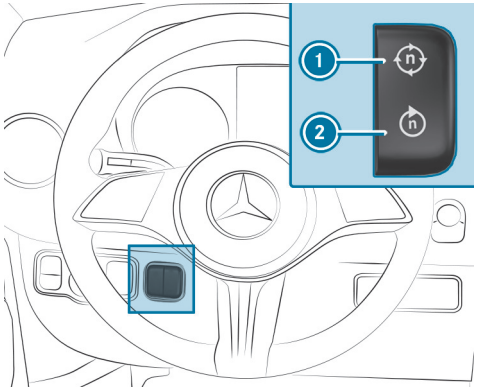

- Engage power take-off (⟶ page 438) or activate ADR.
- **To increase:** press switch 1.
- **To reduce:** press switch 2.

Trailer operation

Notes on trailer operation

WARNING
Risk of accident and injury if the tongue weight is exceeded

The carrier system may detach from the vehicle, thereby endangering other road users.

- Always comply with the permissible tongue weight when using a carrier.

You can find specifications regarding the ball neck on the trailer's identification plate. You can find specifications regarding the trailer on the towing vehicle's identification plate and in the Technical Data (⟶ page 756).

NOTE
Causing wear to the brake linings by permanently depressing the brake pedal

- Do not permanently depress the brake pedal while driving.
- To use braking effect of the engine, shift to a lower gear in good time.

NOTE
The operating permit may be invalidated due to the illegal installation of trailer hitches

The installation – including retrofitting – of a non-folding or non-removable trailer hitch that even partially conceals the license plate or the lighting system is prohibited.

- Observe the applicable legal regulations for the installation of trailer hitches.

Place your vehicle/trailer combination on surfaces that are as even as possible and secure it against rolling away (⟶ page 361). Couple and uncouple the trailer carefully.

When reversing the towing vehicle, ensure that there is no one between the vehicle and the trailer.

If you do not couple the trailer to the towing vehicle correctly, the trailer may become detached. Once it has been coupled and is roadworthy, the trailer must be in a horizontal position behind the towing vehicle.

NOTE THE FOLLOWING REGARDING THE TONGUE WEIGHT:

- Make full use of the maximum tongue weight, where possible.
- Never allow the tongue weight to fall below a legally prescribed minimum; the tongue weight must always be positive.

- Do not exceed or fall below the permissible tongue weights – this must be observed during loading and unloading of the trailer.

DO NOT EXCEED THE FOLLOWING VALUES:

- Permitted braked or unbraked trailer load
  The maximum permissible trailer load for unbraked trailers is 750 kg.
- Permissible rear axle load of the towing vehicle
- Gross vehicle weight rating of the towing vehicle
- Gross vehicle weight rating of the trailer
- Permissible gross combination weight
- Maximum permissible speed of the trailer

THE RELEVANT PERMITTED VALUES, WHICH MUST NOT BE EXCEEDED, CAN BE FOUND IN THE FOLLOWING PLACES:

- in your vehicle documents
- on the identification plate of the trailer hitch
- on the trailer identification plate
- on the vehicle identification plate

If there are discrepancies between the values, the lowest one shall apply.

BEFORE DRIVING OFF, ENSURE THE FOLLOWING:

- The tyre pressure on the rear axle of the towing vehicle has been set for the maximum load.
- The headlamps have been set correctly.

YOUR VEHICLE WILL BEHAVE DIFFERENTLY WITH A TRAILER RELATIVE TO WITHOUT A TRAILER:

- The vehicle/trailer combination will be heavier.
- The vehicle/trailer combination will be restricted in its acceleration and gradeability.
- The vehicle/trailer combination will have an increased braking distance.
- The vehicle/trailer combination will be more susceptible to crosswind gusts.
- The vehicle/trailer combination will require more sensitive steering.
- The vehicle/trailer combination will have a larger turning circle.

This may impair the vehicle's driving characteristics.

When driving with a vehicle/trailer combination, always adapt your speed to the current road and weather conditions. Drive carefully. Keep a sufficient safe distance.

Comply with the maximum permissible speed of 80 km/h or 100 km/h, even in countries in which higher speeds are permitted for vehicle/trailer combinations.

The trailer hitch is one of the most important vehicle parts for road safety. Comply with the instructions on operation, maintenance and servicing in the manufacturer's Owner's Manual.

ⓘ During trailer operation, remember that PARKTRONIC is available only to a limited extent, if at all.

ⓘ The height of the ball neck will change depending on the vehicle's load. In this case, use a trailer with a height-adjustable drawbar.

VEHICLES WITH A DETACHABLE TRAILER COUPLING

NOTE
Increased risk of damage to property due to attached ball neck

► When the trailer is not coupled or the bicycle rack is attached, fold in the ball neck.

Observe the Owner's Manual from the manufacturer of the detachable trailer coupling.

DRIVING NOTES

The maximum permissible speed for vehicle/trailer combinations depends on the type of trailer. Before setting off, consult the trailer's vehicle documents to find out the maximum permissible speed.

Your vehicle will behave differently with a trailer relative to without a trailer and will consume more fuel.

On long and steep downhill gradients, you must select shift range **3**, **2** or **1** in good time.

ⓘ This also applies if cruise control or the limiter is switched on.

You will therefore make use of the engine's braking effect and will not have to brake as often to control the speed. This will take some of the strain off the brake system and prevent the brakes from overheating and wearing too quickly. If you need additional braking, depress the brake pedal intermittently rather than continuously.

Observe the notes on ESP® trailer stabilisation (⟶ page 377).

DRIVING TIPS

IF THE TRAILER STARTS TO SWAY, REMEMBER THE FOLLOWING POINTS:

- Do not accelerate under any circumstances.
- Do not countersteer.
- If necessary, apply the brakes.

ⓘ You can reduce the risk of the trailer swaying and rocking by retrofitting stabiliser bars or trailer stability programs. You can obtain further information from any Mercedes-Benz Service Centre.

WHEN YOU ARE DRIVING WITH A TRAILER, OBSERVE THE FOLLOWING POINTS:

- Maintain a greater distance from the vehicle in front than when driving without a trailer.
- Avoid braking abruptly. If possible, brake gently first of all so that the trailer closes up behind your vehicle. Then, increase the braking force rapidly.
- The values given for start-off gradeability refer to sea level. When driving in the mountains, note that engine output – and thus start-off gradeability – will decrease with increasing altitude.

Attaching the ball neck

WARNING
Risk of accident and injury due to incorrectly installed and secured ball neck

If the ball neck is not engaged, it may become loose while the vehicle is in motion and endanger other road users.

- Engage the ball neck as described and ensure that the ball neck is securely installed.

WARNING
Danger of accident due to non-engaged ball coupling

If the ball coupling has not engaged, the trailer can become detached.

- Always engage the ball coupling as described and ensure that it is securely installed.

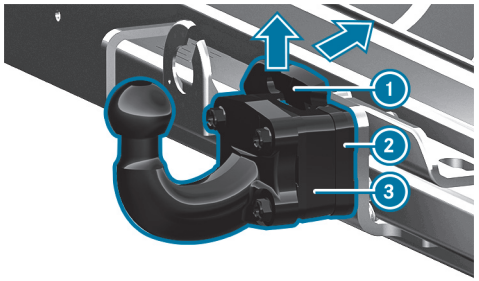

- Use the parking brake to secure the vehicle against rolling away.
- Pull safety spring 1 of ball coupling 3 upwards in the direction of the arrow, push it backwards and hold it in this position.

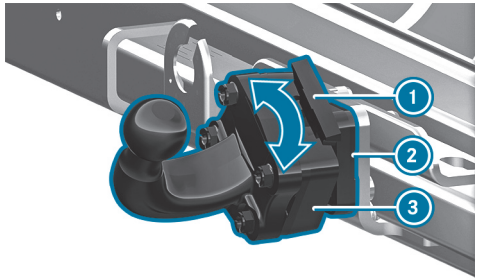

- Place ball neck 3 onto ball neck mount 2 and turn it in the direction of the arrow until ball neck 3 points vertically upwards.
- Re-attach safety spring 1.

ⓘ If the ball neck is dirty, clean it before installation.

Removing the ball neck

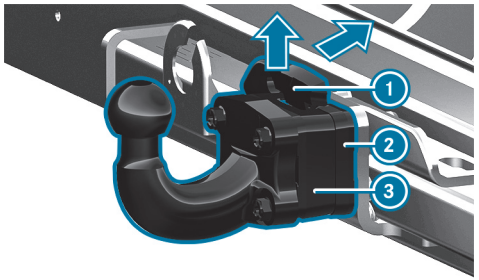

- Use the parking brake to secure the vehicle against rolling away.
- Pull safety spring (1) upwards in the direction of the arrow and push it to the rear.
- Hold ball neck (3) in place.
- Turn ball neck (3) in the direction of the arrow to the left and right and remove it from ball neck mount (2).
- Place the plastic covering on ball neck mount (2).
- If the ball neck is dirty, clean it.
- Place the cover cap on the ball head.
- Stow and secure the ball neck properly.

Coupling/uncoupling a trailer

Requirements:

- The ball neck must be engaged in a securely locked position.

TRAILERS WITH 7-PIN PLUGS CAN BE CONNECTED TO THE VEHICLE USING THE FOLLOWING ADAPTERS:

- Adapter plug
- Adapter cable

COUPLING A TRAILER

> **NOTE**
> Damage to the starter battery due to full discharge
>
> Charging the trailer battery using the power supply of the trailer can damage the starter battery.
>
> - Do not use the vehicle's power supply to charge the trailer battery.

- **Vehicles with automatic transmission:** shift the selector lever to position P.
- Apply the vehicle's parking brake.
- Close all the doors.
- Remove the cover cap from the ball head and stow it away safely (→ page 593).

ⓘ The height of the ball head will change depending on the vehicle's load. In this case, use a trailer with a height-adjustable drawbar.

- Attach the trailer's breakaway cable to the eyelet on the ball neck.
- Remove objects or devices that are preventing the trailer from rolling, e.g. chocks.
- Release the trailer's parking brake.
- Place the trailer in a horizontal position behind the vehicle and couple it.

- Open the cover of the socket.
- Insert plug with tab ① into the socket's groove ③.
- Turn bayonet coupling ② to the right as far as it will go.
- Let the cover engage.
- Attach the cable to the trailer with cable ties (only in the case of adapter cables).
- Make sure that the cable is always slack for ease of movement during cornering.
- Push the combination switch upwards/downwards and check whether the correct turn signal light is flashing on the trailer.

EVEN IF THE TRAILER IS CONNECTED CORRECTLY, A DISPLAY MESSAGE MAY NEVERTHELESS APPEAR ON THE INSTRUMENT CLUSTER IN THE FOLLOWING CASES:

- LEDs have been installed in the trailer's lighting system.
- The current has fallen below the trailer lighting system's minimum current (50 mA)

ⓘ You can connect accessories up to a maximum of 240 W to the permanent power supply.

UNCOUPLING A TRAILER

⚠ **WARNING**
Risk of being crushed and becoming trapped when uncoupling a trailer

When uncoupling a trailer with an engaged inertia-activated brake, your hand may become trapped between the vehicle and the trailer drawbar.

- Do not uncouple trailers with an engaged overrun brake.

NOTE
Damage during uncoupling with an engaged overrun brake

The vehicle may be damaged if you uncouple with an engaged overrun brake.

- Do not uncouple trailers with an engaged overrun brake.

- **Vehicles with automatic transmission:** shift the selector lever to position P.
- Apply the vehicle's parking brake.
- Close all the doors.
- Apply the trailer parking brake.
- Further secure the trailer against rolling away with a wheel chock or similar object.
- Disconnect the electrical connection between the vehicle and trailer.
- Uncouple the trailer.
- Place the cover cap on the ball head.

On vehicles with detachable trailer tow hitches: once the trailer has been uncoupled, remove the ball neck and place the plastic covering on the ball neck mount on the vehicle.

Instrument cluster and on-board computer

This interactive PDF works like a website – tap or click a button to jump straight to where you want to go.
You can return here at any time via the navigation bar at the top left.

Notes on the instrument cluster

Overview of the instrument cluster

Operating the on-board computer

Overview of status displays on the display

Overview of menus on the on-board computer

Menus and submenus

Adjusting the instrument lighting

Notes on the instrument cluster

WARNING
Risk of accident due to an instrument cluster malfunction

In the event of a failure or malfunction of the instrument cluster, you will not recognise limitations in the functions of systems relevant to safety. This may impair operating safety.

► Park the vehicle safely as soon as possible and notify a qualified specialist workshop.

THE INSTRUMENT CLUSTER SHOWS THE FOLLOWING BASIC INFORMATION:

- Speed and engine speed
- Fuel level and coolant temperature
- Indicator and warning lamps

ADDITIONAL FUNCTIONS AVAILABLE INCLUDE THE FOLLOWING:

- Different menus, e.g. for assistance and navigation
- Status displays for the driving systems
- Display messages
- Information on speed, consumption and range

Overview of the instrument cluster

WARNING
Risk of accident due to an instrument cluster malfunction

In the event of a failure or malfunction of the instrument cluster, you will not recognise limitations in the functions of systems relevant to safety. This may impair operating safety.

► Park the vehicle safely as soon as possible and notify a qualified specialist workshop.

If you are unsure about the operational safety of your vehicle, park the vehicle safely as soon as possible. Inform a qualified specialist workshop.

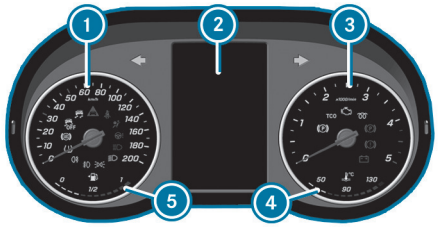

1. Speedometer
2. Instrument cluster display (→ page 454)
3. Rev counter
4. Coolant temperature display
5. Fuel level
   Fuel filler cap location ◂: the fuel filler cap is on the left

In normal driving operation, the coolant temperature display 4 is permitted to rise to 120°C.

SPEEDOMETER
In vehicles with Active Distance Assist DISTRONIC, there are illuminated segments on the speedometer dial.

THESE SEGMENTS SHOW YOU WHAT SPEED RANGE IS AVAILABLE:

- Variable limiter activated (→ page 383)
  The segments light up from the start of the scale to the selected limit speed.
- Active Distance Assist DISTRONIC switched on (→ page 388)
  One or two segments light up in the saved speed range.
- Active Distance Assist DISTRONIC detects a vehicle in front.
  The segments light up from the speed of the vehicle in front up to the saved speed.

You can show the speed as a digital speedometer on the display as well.

If you change your vehicle's wheel size, check its assignment to the wheel size group (→ page 687). If the wheel size group changes, the vehicle's control units must be recoded at a qualified specialist workshop. Otherwise, the speedometer will not display the speed accurately. Driving and driving safety systems may then be operationally impaired or may detect a fault and switch themselves off.

In some countries, an audible signal will sound and/or a message will appear on the display when the vehicle reaches the maximum speed permitted by law, e.g.at 100 km/h.

REV COUNTER

When the red marking on the rev counter ③ is reached (overspeed range), the fuel supply will be interrupted in order to protect the engine.

> **NOTE**
> Engine damage due to maximum engine speed being exceeded
>
> If the maximum permissible engine speed is exceeded, the engine may be damaged.
>
> ► Avoid driving in the red speed range (danger zone).

COOLANT TEMPERATURE DISPLAY

> **WARNING**
> Risk of burns when opening the bonnet
>
> **IF YOU OPEN THE BONNET IN THE EVENT OF AN OVERHEATED ENGINE OR FIRE IN THE ENGINE COMPARTMENT, THE FOLLOWING SITUATIONS MAY OCCUR:**
>
> - You may come into contact with hot gases.
> - You may come into contact with other escaping hot operating fluids.
>
> ► Before opening the bonnet, allow the engine to cool down.
>
> ► In the event of a fire in the engine compartment, keep the bonnet closed and call the fire service.

The coolant temperature display is located within the instrument cluster's rev counter.

OUTSIDE TEMPERATURE DISPLAY

You should pay special attention to road conditions when temperatures are around freezing point.

The outside temperature is shown on the instrument cluster display (→ page 454).

Changes in the outside temperature will be displayed after a short delay.

Operating the on-board computer

WARNING
Risk of distraction from information systems and communications equipment

If you operate information systems and communication devices integrated in the vehicle when driving, you could be distracted from the traffic situation. This could also cause you to lose control of the vehicle.

- Only operate this equipment when the traffic situation permits.
- If you cannot be sure of this, stop the vehicle whilst paying attention to road and traffic conditions and operate the equipment with the vehicle stationary.

You must observe the legal requirements for the country in which you are currently driving when operating the on-board computer.

SCROLLING ON THE MENU BAR

The indicators for the on-board computer will appear on the instrument cluster display (⟶ page 487).

When the function is switched on, different signal tones will provide feedback while the on-board computer is being operated. These include a signal tone when the end of a list is reached or when a list is being scrolled through.

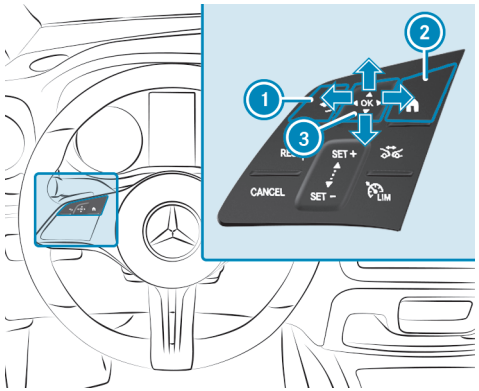

1. Back button
2. Main menu button
3. Touch Control

The on-board computer on the instrument cluster is operated using the controls on the left-hand side of the steering wheel. You can use the Touch Control 3 to navigate vertically and horizontally by swiping with one finger. Confirm the selection by pressing the Touch Control.

To operate the Touch Control 3 in the most effective way, use the tip of your thumb if possible. You can also set the sensitivity of the Touch Control on the media display (⟶ page 487).

- Briefly press the main menu button 2.

- Select a menu by swiping to the left or right on the Touch Control (3).
- **To confirm:** press the Touch Control (3).

Overview of status displays on the display

INSTRUMENT CLUSTER DISPLAY

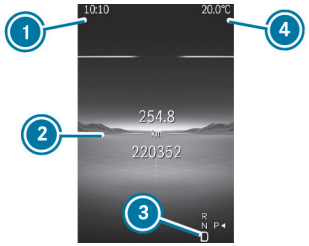

Display (example)

1. Time
2. Display section
3. Transmission position (⟶ page 334, 332)
4. Outside temperature

ADDITIONAL NOTIFICATIONS ON THE INSTRUMENT CLUSTER DISPLAY:

↑	Gearshift recommendation (⟶ page 333)
P OFF	Parking Assist PARKTRONIC switched off
	Cruise control (⟶ page 382)
	Active Distance Assist DISTRONIC
LIM	Limiter (⟶ page 382)
	ECO start/stop function (⟶ page 73)
HOLD	HOLD function (⟶ page 406)
	Adaptive Highbeam Assist (⟶ page 256)
120 km/h!	Maximum permitted speed exceeded (for certain countries only)
OFF	ATTENTION ASSIST switched off
	One of the doors is not fully closed
	Rear window wiper switched on (⟶ page 273)
	Retarder (see separate Owner's Manual)
SOS NOT READY	Emergency call system not active
OFF	Active Lane Keeping Assist switched off
OFF	Active Brake Assist switched off
	Driver camera (⟶ page 503)

Vehicles with Traffic Sign Assist: instructions and traffic signs detected (⟶ page 422).

Overview of menus on the on-board computer

Use the left-hand control panel on the multifunction steering wheel to call up the list of menus and select a menu (→ page 452).

DEPENDING ON THE VEHICLE EQUIPMENT, YOU CAN CALL UP THE FOLLOWING MENUS:

- Service menu (→ page 456)
- Assistance menu (→ page 456)
- Trip menu (→ page 457)
- Navigation menu (→ page 458)
- Radio menu (→ page 459)
- Media menu (→ page 460)
- Telephone menu (→ page 460)

Menus and submenus

Calling up functions in the service menu

On-board computer:

Service

▶ Select and confirm the desired function.

THE FOLLOWING FUNCTIONS ARE AVAILABLE IN THE SERVICE MENU:

- Announcements: message memory (⟶ page 761)
- AdBlue: Display AdBlue® fill level (⟶ page 356)
- Tyres:
  - Check the tyre pressure with the tyre pressure monitoring system (⟶ page 36)
  - Restart the tyre pressure monitoring system (⟶ page 680)
- ASSYST PLUS: Call up the service due date (⟶ page 604)
- Operating hours: Show operating hours
- Engine oil level: Measure engine oil level
- Particulate filter: Notes on regeneration (⟶ page 327)
- Consumption info: Overview of long-term consumption

Calling up the assistant display (Assistance menu)

On-board computer:

Assistance

Various driver assistance systems and navigation instructions are shown on the assistant display.

THE FOLLOWING DISPLAYS ARE AVAILABLE ON THE ASSISTANCE MENU:

- Assistant display
- Blind Spot Assist

▶ Select the desired display and confirm.

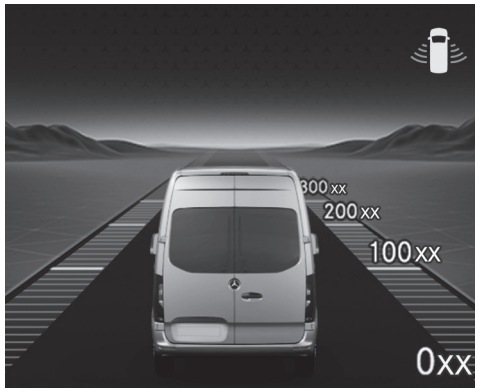

Indicator in the Assistance menu (example)

THE FOLLOWING STATUS DISPLAYS ARE AVAILABLE ON THE ASSISTANT DISPLAY:

- Specified distance for Active Distance Assist DISTRONIC
- Blind Spot Assist status display (→ page 429)
- Blind Spot Assist on and ready to issue warnings (lines of the radio waves green)
- Blind Spot Assist on and not ready to issue warnings (lines of the radio waves grey)
- Information about Lane Keeping Assist over the lane marking

Calling up the Trip menu

On-board computer:

Trip

▶ Select the desired display and confirm.

THE FOLLOWING DISPLAYS ARE AVAILABLE ON THE TRIP MENU:

- Basic trip display
- Range and current fuel consumption

  A recuperation display will also be shown. If only a small amount of fuel is left in the fuel tank, a vehicle being refuelled will appear instead of the approximate range.
- ECO display
- From start
- From reset
- ATTENTION ASSIST
- Digital speedometer

Standard display (example)

1. Trip distance
2. Total distance

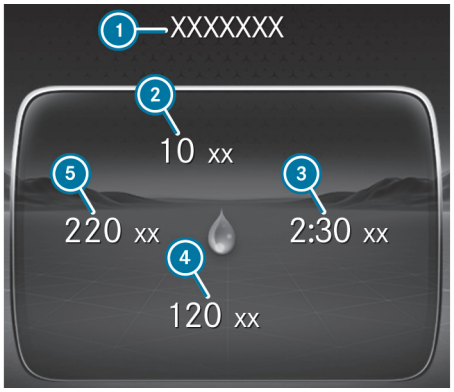

Trip computer display (example)

1. From start or from reset
2. Average fuel consumption (from start or from reset)
3. Driving time (from start or from reset)
4. Average speed (from start or from reset)
5. Distance covered (from start or from reset)

ATTENTION ASSIST display: 15 min since last break

Resetting values on the trip menu of the on-board computer

On-board computer:

→ Trip

ⓘ The wording of the displayed main menu may differ. Therefore, pay attention to the menu overview for the instrument cluster (→ page 452).

YOU CAN RESET THE VALUES OF THE FOLLOWING FUNCTIONS:

- Trip distance:
  - Reset odometer?
- Trip computer:
  - From start
  - From reset
- ECO display

▶ Select the function for which the value is to be reset and confirm this selection.

▶ Confirm the Reset values? prompt with Yes.

Calling up the Navigation menu

On-board computer:

→ Navigation

No change of direction announced (example)

1. Distance to the next destination
2. Estimated arrival time
3. Distance to the next change of direction
4. Name of current road

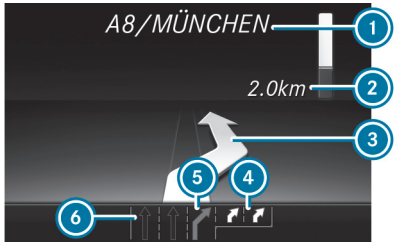

Change of direction announced (example)

1. Road to which the change of direction leads and target direction of the change of direction
2. Distance to the change of direction
3. Change-of-direction symbol
4. Recommended lane and new lane during a change of direction (white)
5. Possible lane
6. Lane not recommended (dark grey)

OTHER POSSIBLE DISPLAYS ARE AVAILABLE ON THE NAVIGATION MENU:

- Direction of travel: The direction of travel and the road currently being travelled are displayed.
- New route... or Calculating route...: A new route is being calculated.
- Road not mapped: The road is not known, e.g.it has only recently been built.
- No route: The route to the selected destination cannot be calculated.
- Off map: The map for the current position is not available.
- Destination area reached: You have reached the destination area.
- 🏁: You have reached the destination or an intermediate destination.

► Exit the menu or select and confirm a destination.
If a destination is entered and confirmed, route guidance will start.

► If route guidance was previously active, a query will appear asking whether the current route guidance is to be terminated.

► Confirm the prompt.
Route guidance will start.

Calling up the Radio menu

On-board computer:

→ Radio

1. Frequency range
2. Station
3. Name of track
4. Artist's name

THE FOLLOWING INDICATORS ARE AVAILABLE:

- Frequency range
- Station list

► Select the radio station's frequency or a radio station from the station list.

► Confirm your selection.

When you select a station from the station presets, the preset will appear next to the station name. When you select a saved station in the frequency range, an asterisk will appear next to the station name.

Calling up the Media menu

On-board computer:

→ Media

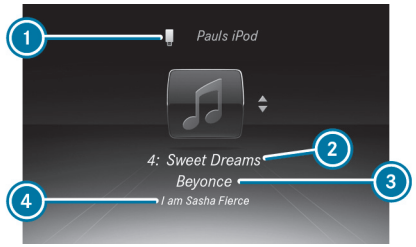

1. Media source
2. Current track and track number
3. Artist's name
4. Name of album

THE FOLLOWING DISPLAYS ARE AVAILABLE ON THE MEDIA MENU:

- Media source selection list
- Current playback

▶ Select and confirm the media source.

▶ Select and confirm the required playback.

ⓘ This is how to select a station when TV is the media source.

Select the phone number on the Telephone menu

> ⚠ **WARNING**
> Risk of distraction from information systems and communications equipment
>
> If you operate information systems and communication devices integrated in the vehicle when driving, you could be distracted from the traffic situation. This could also cause you to lose control of the vehicle.
>
> ▶ Only operate this equipment when the traffic situation permits.
>
> ▶ If you cannot be sure of this, stop the vehicle whilst paying attention to road and traffic conditions and operate the equipment with the vehicle stationary.

When using the phone, you must observe the legal requirements for the country in which you are currently driving.

Requirements

- The mobile phone is connected to the multimedia system.

Instrument cluster:

→ Telephone

SELECT ONE OF THE FOLLOWING OPTIONS:

- Previous calls
- Phone book

- Call status

► Select and confirm a telephone number.

If only one telephone number has been saved for the entry: the telephone number will be dialled.

► **If multiple telephone numbers have been saved for the entry:** select and confirm a telephone number.

The telephone number will be dialled.

ACCEPTING/REJECTING A CALL

When you receive a call, the Incoming call message will appear on the display.

► Press to accept the call or to reject it.

Adjusting the instrument lighting

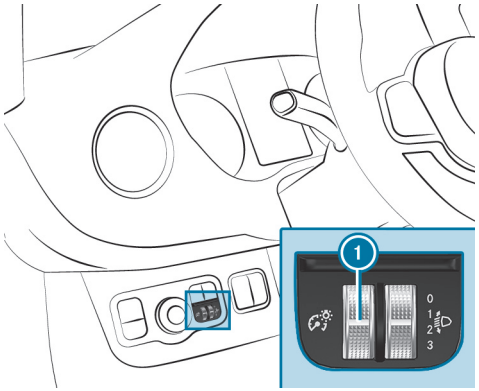

► Turn the brightness control (1) up or down.

The lighting of the instrument cluster and the controls in the vehicle interior will be adjusted.

MBUX Voice Assistant

This interactive PDF works like a website – tap or click a button to jump straight to where you want to go.
You can return here at any time via the navigation bar at the top left.

Notes on operating safety

Operating the MBUX Voice Assistant

Using MBUX Voice Assistant effectively

Basic voice commands

Notes on operating safety

FOR YOUR OWN SAFETY, ALWAYS OBSERVE THE FOLLOWING POINTS WHEN OPERATING MOBILE COMMUNICATIONS EQUIPMENT AND ESPECIALLY YOUR VOICE CONTROL SYSTEM:

- Please observe the legal requirements for the country in which you are driving.
- If you use the voice control system in an emergency your voice can change and your telephone call, e.g. an emergency call, can thereby be unnecessarily delayed.
- Familiarise yourself with the voice control system functions before starting the journey.

The voice control system does not replace the Owner's Manual.
The answers from the voice control system do not provide the complete scope of information contained in the Owner's Manual. The voice control system also does not give detailed warning or damage information. Therefore read the Owner's Manual so that you are fully informed about the functions and the safe operation of the vehicle.

Operating the MBUX Voice Assistant

Conducting a dialogue

Requirements:

- Voice activation is activated in the multimedia system (→ page 466).
- For corrections during output, the Voice barge-in option must be activated in the multimedia system (→ page 466).

STARTING A DIALOGUE

► Say Hey Mercedes to activate the MBUX Voice Assistant.

or

► Press the button on the multifunction steering wheel.

A wave appears in the MBUX multimedia system. The dialogue can be started.

For the dialogue with the MBUX Voice Assistant, you can use complete sentences of colloquial language as voice commands. Voice activation can also be combined directly with a voice command, e.g. Hey Mercedes, how warm is it outside?

INTERRUPTING THE DIALOGUE

► During the dialogue say Pause.

The dialogue is interrupted.

► Say Hey Mercedes to continue the dialogue.

CORRECTING AN ENTRY

► During the dialogue say Correction.

or

► Interrupt the system's voice output.

CHANGING DIALOGUE LEVEL

► During the dialogue, say Back.

The MBUX Voice Assistant jumps back to the previous dialogue step.

► During the dialogue, say From the beginning again.

The MBUX Voice Assistant jumps to the highest dialogue level.

NAVIGATING IN THE SELECTION LIST

If a voice command does not achieve a clear result, a selection list is shown.

► Say the line number or the content to select an entry or to have further details shown.

► Say Next page or Previous page to browse the selection list.

CALLING UP HELP

► **For information about the MBUX Voice Assistant:** say Hey Mercedes, what can you do? .

► **Current application:** say Help.

You will receive suggestions and information about operation of the MBUX Voice Assistant for the current application.

- **Specific function:** call up the voice command for the required function, for example with Hey Mercedes, I need help with the radio.
- **Digital Owner's Manual:** say Show me the Owner's Manual.
  The full extent of the Digital Owner's Manual is available on the media display when the vehicle is stationary.

Overview of the operable functions of the MBUX Voice Assistant

YOU CAN USE THE MBUX VOICE ASSISTANT TO OPERATE THE FOLLOWING FUNCTIONS DEPENDING ON THE VEHICLE EQUIPMENT:

- Telephone
- Text message and e-mail
- Navigation
- Radio and media
- Vehicle functions
- Online functions

Full functionality of the voice control system is only available for you with activation of online voice control (→ page 466).

Information on the language setting

You can change the language of the MBUX Voice Assistant via the system language settings (→ page 509). If the set system language is not supported by the MBUX Voice Assistant, English will be selected.

Setting functions of MBUX Voice Assistant using the multimedia system

Multimedia system:

SWITCHING VOICE ACTIVATION OF MBUX VOICE ASSISTANT ON OR OFF

> ⓘ For vehicles with driver camera or MBUX Interior Assistant, the MBUX Voice Assistant can be switched on or off in the Intelligent Assistants menu.

- Select Hey Mercedes.
  When the function is active, the Hey Mercedes voice command can activate the dialogue.

SWITCHING DIRECT COMMANDS ON OR OFF

- Select ⚙.
- Activate or deactivate the function.
  If the function is active, some commands can be used without Hey Mercedes, for example Next track.

SWITCHING VOICE ACTIVATION FOR INDIVIDUAL SEATS ON OR OFF

- Select ⚙.
- Switch the function for the desired seats on or off.

SWITCHING VOICE INTERRUPTION ON OR OFF

- Select Further settings.

- Select Voice barge-in.

  When the function is active, you can speak a command during voice output from the system.

SWITCHING PROACTIVITY ON OR OFF

- Select Further settings.
- Select the desired situation, e.g. Activate your profile or Don't forget your phone.

  When the function is active, the voice assistant proactively provides information in specific situations.

ACTIVATING OR DEACTIVATING ONLINE VOICE CONTROL

ⓘ Online voice control is activated at the factory.

- Select Online recognition.
- Activate or deactivate the function.

  If the function is switched on and a Mercedes-Benz user account is linked to the vehicle, additional results are available through external information, e.g. information on points of interest. By clicking the symbol in the wave, more information about the online voice control can be displayed.

ACTIVATING OR DEACTIVATING CONTACTS FOR ONLINE USE

- Select Contact upload for online recognition.

  When active the function allows contacts to be found more easily using voice input.

Using MBUX Voice Assistant effectively

Notes on optimum use of MBUX Voice Assistant

- The MBUX Voice Assistant is operational half a minute after switching on the vehicle and can be operated from all seats, depending on the equipment installed. The system recognises from which seat the command was spoken and performs actions according to the seat position.
- When a dialogue is ended, the MBUX Voice Assistant continues to be active for as long as the wave is displayed in the multimedia system. You can say another voice command without saying Hey Mercedes.
- Using the direct command Change language to English, the system language can be changed to English without Hey Mercedes. Direct commands must be activated for this.
- If a user profile has been stored and is active, the MBUX Voice Assistant can make suggestions based on the habits of the user. If the voice commands are not clear, the system selects an action. The action can be corrected with a new voice command.

  Say Hey Mercedes, load my personal profile, to activate the profile. The user's voice must first be learned by the system and assigned to a profile.

  Further information on user profiles (⟶ page 493).
- With the MBUX Voice Assistant, incoming calls can be accepted or rejected without the keyword Hey Mercedes.

Information on the MBUX online voice assistant

The online voice control facilitates recognition and thanks to external information makes additional results available.

Therefore, Mercedes-Benz recommends that you activate online voice control (⟶ page 466).

You will need a Mercedes-Benz user account for this. If you do not yet have a user account you have to create one and connect it with your vehicle (⟶ page 481).

Then call up your Mercedes-Benz user account. The Digital Extras are displayed and can be activated (⟶ page 482).

By clicking on the symbols displayed in the wave, further information on the online status is displayed.

WHEN ONLINE VOICE CONTROL IS ACTIVE, ADDITIONAL FUNCTIONS ARE AVAILABLE SUCH AS:

- Weather
- General knowledge
- Public holidays and school holidays
- Smarthome
- Messages
- Time, date and time zones

- Pocket and currency calculator
- Football results and fixture lists
- Share prices
- Calendar
- ChitChat
- Horoscope
- Geo Quiz

The availability of these functions is country and equipment-dependent.

Text content is taken from Wikipedia in accordance with the CC BY-SA 3.0 licence.

Basic voice commands

Notes on the voice commands

It is not necessary to use exact voice commands to call up a specific function. The MBUX Voice Assistant also understands you when you use your colloquial speech. Some examples are listed below. For some languages however these examples are only available to a limited extent.

EXAMPLES OF VOICE COMMANDS:

- Navigation (→ page 470)
- Telephone (→ page 470)
- Radio and TV (→ page 471)
- Media player (→ page 471)
- Messages (→ page 471)
- Vehicle functions (→ page 471)
- Online functions

Examples of navigation voice commands

You can operate the navigation system using the MBUX Voice Assistant. The following list offers just a small selection of the possible navigation commands. Speak the following voice command for further suggestions: Help for navigation.

- Drive me home.
- Where is the nearest filling station?
- Is there a service area along the route?
- Set Central Park as intermediate destination.
- Cancel the route guidance.
- Show my last destination.
- I want to buy juice.
- Search for a French restaurant in Manhattan.

Examples of telephone voice commands

You can operate phones connected with MBUX multimedia system the using the MBUX Voice Assistant. The following list offers just a small selection of the possible telephone commands. Speak the following voice command for further suggestions: Help for phone.

- Call Peter Miller on the mobile phone.
- Dial 0711 17 0.
- Call my father.
- Accept call
- Reject call
- Search for the contact Peter Miller.
- Switch to address book
- Show me the incoming calls.
- Switch the phone

Examples of radio and TV voice commands

Depending on the vehicle equipment, you can operate the radio and TV using the MBUX Voice Assistant. The following list offers just a small selection of the possible radio or TV voice commands. Speak the following voice commands for further suggestions: Help for radio. or Help for TV.

- Play the radio station Heart FM.
- Next station.
- Previous station.
- Show me the list of radio stations
- Save the station
- What am I listening to?

Examples of media voice commands

You can operate connected media sources and online music using the MBUX Voice Assistant. The following list offers just a small selection of the possible media voice commands. Speak the following voice command for further suggestions: Help for media or Help for player.

- Play Michael Jackson.
- Play "Yellow Submarine' by the Beatles.
- Next track.
- Previous track.
- Play similar track.
- Repeat this track.
- Switch on random playback.
- Mute the music.
- Switch to USB.

Examples of message voice commands

Messages can be created, edited and listened to using the MBUX Voice Assistant. The following list offers just a small selection of the possible message commands. Speak the following voice command for further suggestions: Help for messages

- Write a text message to Jane Doe: When will the next meeting take place?
- Show me my new e-mails.
- Write an e-mail to Jane Doe.
- Read me my new text messages.
- Show all new text messages.
- Write an e-mail to John Doe in English

Examples of vehicle voice commands

You can operate vehicle settings and vehicle functions using the MBUX Voice Assistant. The following list offers just a small selection of the possible vehicle voice commands.

> ⓘ If no seat is mentioned for commands, the action is carried out automatically for the seat from which the command was spoken or for the function which is closest to that seat.

- Switch the seat heating to level 2.
- My feet are cold.
- Open all the windows.
- How fast can I drive here?
- Tell me my next service appointment.

- How warm is it outside?

INFORMATION ABOUT THE VEHICLE CAN ALSO BE REQUESTED:

- Information about individual items of the vehicle equipment
  - Hey Mercedes, do I have Blind Spot Assist?
  - Hey Mercedes, where is the warning triangle?
- Information about functioning of the systems and components installed in the vehicle
  - Hey Mercedes, what is DISTRONIC?
  - Hey Mercedes, what do I need ESP for?
  - Hey Mercedes, what is MBUX?
- Information about operating the systems and components installed in the vehicle
  - Hey Mercedes, how do I connect my smartphone?
  - Hey Mercedes, how can I turn on the main beam headlamps?

Mercedes-Benz Support calls and Digital Extras

This interactive PDF works like a website – tap or click a button to jump straight to where you want to go.
You can return here at any time via the navigation bar at the top left.

Mercedes-Benz Support calls

Mercedes-Benz Connect

MB Apps (Digital Extras)

Mercedes-Benz Support calls

Making a call via the overhead control panel

ⓘ Mercedes-Benz Support calls are not available in all countries. Contact a Mercedes-Benz service centre to find out whether these functions are available in your country.

ⓘ Please note that product scopes can vary depending on the model series, year of production and equipment, as well as between private and commercial user accounts.

THE FOLLOWING DIGITAL EXTRAS ARE NOT TIME-LIMITED:

- Accident and Breakdown Management
- Maintenance management
- Telediagnosis

Other Digital Extras can be extended at the end of the initial term for a fee. The first activation of the Digital Extras is possible within one year of initial registration or commissioning by the customer, depending on which occurs first.

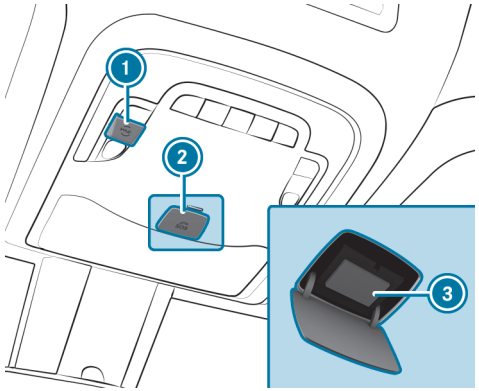

1 me button for Mercedes-Benz Support calls
2 SOS button cover
3 SOS button (emergency call system)

Making a Mercedes-Benz Support call

► Press button 1.

MAKING AN EMERGENCY CALL

► Briefly press the cover on SOS button 2 to open it.

► Press and hold SOS button 3 for at least one second.

If a Mercedes-Benz Support call is active, an emergency call can still be initiated. This has priority over all other active calls.

Information on the Mercedes-Benz Support call via the overhead control panel

A Mercedes-Benz Support call has been made using the me button in the overhead control panel (→ page 474).

YOU CAN REACH THE DESIRED SERVICE VIA THE VOICE DIALOGUE SYSTEM:

- Accident and Breakdown Management
- Mercedes-Benz Support for general information about the vehicle

YOU CAN FIND INFORMATION ON THE FOLLOWING TOPICS:

- Activation of Digital Extras
- Operating the vehicle
- Nearest Mercedes-Benz service centre
- More products from Mercedes-Benz

Data is transmitted during the connection to Mercedes-Benz Support (→ page 476).

Calling Mercedes-Benz Support using the multimedia system

Requirements

- Access to a mobile phone network is available.
- There is sufficient network coverage from a mobile phone network provider In the respective region.
- The vehicle must be switched on so that vehicle data can be transferred automatically.

Multimedia system:

→ [⌂] ▸▸ Phone ▸▸ [☎]

▶ Call Mercedes-Benz Support.

With your consent, the multimedia system sends the required vehicle data. The data transfer is shown in the display.

▶ Select a service using the voice dialogue system.

A connection is established with a contact person at Mercedes-Benz Support.

Arranging a service appointment via a Mercedes-Benz Support call

If you have activated the Service Management Digital Extra, relevant vehicle data is automatically sent to Mercedes-Benz Support. You will then receive individual recommendations regarding the maintenance of your vehicle. You will receive an offer for the upcoming maintenance scopes from the service partner stored in your user account.

Regardless of whether you have consented to the maintenance management service, the multimedia system reminds you after a certain amount of time that a service is due. A prompt appears asking if you would like to make an appointment.

▶ **To arrange a service appointment:** select Call.

After your confirmation, the vehicle data is sent and Mercedes-Benz Support deals with your appointment. The information is then sent to your desired service outlet.

This will contact you to confirm the appointment and if necessary consult about the details.

ⓘ If you select Call later after the service message appears, the message is hidden and reappears at a later time.

ⓘ No request for consent to data transmissions takes place if the Accident Recovery and Breakdown Management Digital Extras are activated.

Consenting to data transfer during a Mercedes-Benz Support call

Requirements:

- There is an active Mercedes-Benz Support call via the multimedia system or the buttons in the overhead control panel (⟶ page 474).

ⓘ The prompt to confirm data transfer does not appear in all countries.

If the Accident Recovery and Breakdown Management Digital Extras are not activated, the Do you want to transmit vehicle data and the vehicle's position to the Mercedes-Benz Customer Centre in order to improve the processing of your request? message appears.

► Select Yes.
Relevant identification data is transmitted automatically.

More information on Digital Extras: https://www.mercedes-benz.de/passengercars/services/mercedes-me.html

Data transmitted during a Mercedes-Benz Support call

If you initiate a call via Mercedes-Benz Support, data will be transferred. This enables targeted advice and smooth service.

THE FOLLOWING REQUIREMENTS MUST BE MET FOR THE DATA TRANSFER:

- The vehicle is switched on.
- The necessary data transmission technology is supported by the mobile phone network provider.
- A sufficient mobile phone connection quality is provided.

MULTI-STAGE TRANSMISSION DEPENDS ON THE FOLLOWING FACTORS:

- Reason for the initiation of the call
- Available mobile radio transmission technology
- Activated Digital Extras
- Selected service in the voice dialogue system

ⓘ A prompt for consent to data transmission is only made if the corresponding Digital Extra has not been activated.

ⓘ The scope of the transmitted data depends on the vehicle model and equipment. For technical reasons not all data is available at all times.

ⓘ The prompt to confirm data transfer does not appear in all countries.

DATA TRANSMISSION WHEN DIGITAL EXTRAS ARE NOT ACTIVATED

IF NO DIGITAL EXTRAS ARE ACTIVATED AND THE DATA PROTECTION PROMPT HAS BEEN CONFIRMED, THE FOLLOWING DATA ARE TRANSMITTED:

- Vehicle identification number
- Time of the call
- Reason for the initiation of the call
- Confirmation of the data protection prompt
- Vehicle country code
- Set language for the multimedia system
- Call number of the communication platform installed in the vehicle

IF A CALL IS MADE FOR A SERVICE APPOINTMENT VIA THE SERVICE REMINDER, THE FOLLOWING DATA IS ALSO TRANSMITTED:

- Current mileage and maintenance data

IF A CALL WAS MADE VIA THE MULTIMEDIA SYSTEM AFTER AUTOMATIC ACCIDENT OR BREAKDOWN DETECTION, THE FOLLOWING DATA IS ALSO TRANSMITTED:

- Current mileage and maintenance data

IF ACCIDENT RECOVERY AND BREAKDOWN MANAGEMENT IS SELECTED USING THE VOICE DIALOGUE SYSTEM AND NO DIGITAL EXTRA IS ACTIVATED, BUT THE DATA PROTECTION REQUEST HAS BEEN CONFIRMED, THE FOLLOWING DATA MAY ADDITIONALLY BE REQUESTED FROM THE VEHICLE BY MERCEDES-BENZ SUPPORT:

- Current vehicle location

IF THE DATA PROTECTION REQUEST HAS BEEN DECLINED, THE FOLLOWING DATA WILL BE TRANSFERRED TO ENABLE TARGETED ADVICE AND A SMOOTH SERVICE:

- Time of the call
- Reason for the initiation of the call
- Rejection of the data protection prompt
- Vehicle country code
- Set language for the multimedia system
- Call number of the communication platform installed in the vehicle

DATA TRANSMISSION WHEN DIGITAL EXTRAS ARE ACTIVATED

Only in the second step and only for the respective activated Digital Extras, further case-specific data is transmitted in order to enable an optimal service.

An overview of the data transmitted can be found in the respective terms of use for Digital Extras. You can obtain these in the Mercedes-Benz Portal: https://me.secure.mercedes-benz.com

DATA PROCESSING

The data transmitted as part of the call will be deleted from the transmitting systems once the call has been completed, provided they are not used for other activated Digital Extras.

The case-related data will be processed and stored at Mercedes-Benz Support and, if necessary for case processing, forwarded to the service partner commissioned by Mercedes-Benz Support. Please refer to the data protection notes for Digital Extras either on the Mercedes-Benz website at https://me.secure.mercedes-benz.com or in the pre-recorded message which you hear at the beginning of the call to Mercedes-Benz Support.

ⓘ The recorded message is not available in every country.

Mercedes-Benz Connect

Information on Mercedes-Benz Connect

ⓘ Individual Digital Extras or certain packages are not available in every country. Contact a Mercedes-Benz service centre to find out whether these functions are available in your country.

ⓘ Please note that product scopes can vary depending on the model series, year of production and equipment, as well as between private and commercial user accounts.

YOU CAN USE THE FOLLOWING DIGITAL EXTRAS VIA THE MULTIMEDIA SYSTEM OR THE OVERHEAD CONTROL PANEL, IF AVAILABLE, FOR EXAMPLE:

- Accident Recovery (button in the overhead control panel or the situation-dependent display in the multimedia system)
- Breakdown Management (button in the overhead control panel or the situation-dependent display in the multimedia system)
- Mercedes-Benz emergency call system (automatic emergency call and SOS button)

The Accident Recovery and Breakdown Management Digital Extras and the Mercedes-Benz emergency call centre are available to you around the clock.

The button for a Mercedes-Benz Support call and the SOS button are located ion the overhead control panel of the vehicle (⟶ page 474).

If the multimedia system is available in the vehicle, you can also call Mercedes-Benz Support using the multimedia system (⟶ page 475).

Please note that Mercedes-Benz Connect is a Mercedes-Benz service. In emergencies, call the national emergency services first using the standard national emergency service phone numbers. You can also use the Mercedes-Benz emergency call system (⟶ page 74).

Observe the terms of use for the Digital Extras. You can obtain these in the Mercedes-Benz Portal: https://me.secure.mercedes-benz.com

Information on Accident and Breakdown Management Digital Extras

ⓘ The Accident and Breakdown Management Digital Extras are not available in all countries. Contact a Mercedes-Benz service centre to find out whether this function is available in your country.

THE ACCIDENT AND BREAKDOWN MANAGEMENT CAN, AMONGST OTHERS, INCLUDE THE FOLLOWING FUNCTIONS:

- Supplement to the Mercedes-Benz emergency call system (⟶ page 74)

If necessary, the contact person at the Mercedes-Benz emergency call centre forwards the call to Accident and Breakdown Management. However, call forwarding is not possible in all countries.

- Breakdown assistance on location by a technician and/or towing away of the vehicle to the nearest Mercedes-Benz service centre

  You may be charged for these services.
- In the event of a breakdown or accident, further vehicle data is sent which enables optimal assistance by Mercedes-Benz Support and the appointed service partner or breakdown mechanic.
- If available: Supplement to the Telediagnosis Digital Extra

  With the Telediagnosis function, specific wear and failure reports are recorded by the service provider, in so far as these can be clearly interpreted and are available through the monitoring of components that are subject to diagnostics.

  If your vehicle detects a breakdown or threat of a breakdown, you may be prompted via the multimedia system to contact Mercedes-Benz Support for further help. This prompt in the multimedia system only appears when the vehicle is stationary.

ⓘ These Digital Extras are subject to technical restrictions such as the mobile phone coverage, mobile network quality and the ability of the processing systems to interpret the transferred data. Under certain circumstances, this may result in delays or omission of the message in the multimedia system.

Please note that Mercedes-Benz Support call is a Mercedes-Benz service. In the event of an emergency always call the national emergency services first or use the Mercedes-Benz emergency call system (→ page 634).

You can find more information on Digital Extras in the Mercedes-Benz Portal: https://www.mercedes-benz.de/passengercars/services/mercedes-me.html

Data transmitted with Mercedes-Benz Connect

THE DATA TRANSFERRED DURING A MERCEDES-BENZ SUPPORT CALL DEPENDS ON:

- The reason for the initiation of the call
- The service selected in the voice dialogue system
- The Digital Extras which are activated (→ page 476)

You can ascertain which data is transferred in conjunction with Digital Extras by consulting the currently valid terms of use and data protection notes for Digital Extras. You can find these in your Mercedes-Benz user account.

MB Apps (Digital Extras)

Information on MB Apps/Digital Extras

REQUIREMENTS

- To use the Digital Extras, registration must have been carried out in the Mercedes-Benz portal.
- You must have agreed with the terms of use for Digital Extras.
- The Digital Extras must be activated.

  The Digital Extras can be activated in the Mercedes-Benz Portal via the path Manage vehicle > My Digital Extras.

With a Mercedes me ID user account you have access to Mercedes-Benz services and offers.

> ⓘ Please note that product scopes can vary depending on the model series, year of production and equipment, as well as between private and commercial user accounts.

Availability is country-dependent.

Further information can be obtained from a Mercedes-Benz service centre or in the Mercedes-Benz Portal: https://www.mercedes-benz.de/passengercars/services/mercedes-me.html

Calling up a Mercedes me ID user account

Multimedia system:

MB Apps ▶▶ Mercedes me

VEHICLE IS LINKED TO A MERCEDES ME ID USER ACCOUNT AND DIGITAL EXTRAS ARE AVAILABLE

▶ Select Mercedes me ID.

Information about the linked Mercedes me ID appears.

VEHICLE IS NOT LINKED TO MERCEDES ME ID USER ACCOUNT

> ⓘ If you do not yet have a Mercedes me ID, you can create a Mercedes me ID at: https://www.mercedes-benz.de/passengercars/services/mercedes-me.html or in the Mercedes-Benz App. A valid email address or phone number is required for this.

▶ Select .

▶ Select MB Apps.

▶ Select Mercedes me.

▶ Follow the instructions on the display to link your Mercedes me ID user account with the vehicle.

ⓘ If the Mercedes-Benz App is available on a mobile phone, the vehicle link can be made via the displayed QR code.

Calling up Digital Extras

Requirements

- The vehicle is linked with the Mercedes me ID user account.

Multimedia system:

⟶ ⌂ ▶▶ MB Apps ▶▶ Mercedes me

▶ Select My Digital Extras.

The Digital Extras for which you have a valid licence are displayed in alphabetical order.

ORDERING OR EXTENDING DIGITAL EXTRAS

Use the store to order or extend Digital Extras.

▶ Select ⌂.

▶ Select Store.

Removing the link between the Mercedes me ID user account and the vehicle

Requirements:

- The Mercedes me ID of the user account that was first linked to the vehicle is logged in.
- The user profile is synchronised (⟶ page 496).
- A Mercedes me PIN has been set.

Multimedia system:

⟶ ⌂ ▶▶ MB Apps ▶▶ Mercedes me

▶ Select Mercedes me ID.

▶ Select Delete vehicle connection.

ⓘ Only the user whose Mercedes me ID user account was first linked to the vehicle can remove the link between all users and the vehicle.

MBUX multimedia system

This interactive PDF works like a website – tap or click a button to jump straight to where you want to go.
You can return here at any time via the navigation bar at the top left.

Overview and operation
Driver camera
System settings
Vehicle information
Off-road menu
Navigation
Telephone
Online and Internet functions
Media
Radio
Sound

Overview and operation

Overview of the MBUX multimedia system

WARNING
Risk of distraction from information systems and communications equipment

If you operate information systems and communication devices integrated in the vehicle when driving, you could be distracted from the traffic situation. This could also cause you to lose control of the vehicle.

- ► Only operate this equipment when the traffic situation permits.
- ► If you cannot be sure of this, stop the vehicle whilst paying attention to road and traffic conditions and operate the equipment with the vehicle stationary.

You must observe the legal requirements for the country in which you are currently driving when operating the multimedia system.
MBUX stands for Mercedes-Benz User Experience.

THE FUNCTIONS OF YOUR MBUX MULTIMEDIA SYSTEM MAY DIFFER AND DEPEND ON THE FOLLOWING FACTORS:

- Market
- National version
- Technical conditions

Functions and Digital Extras provided by Mercedes-Benz and/or third-party providers may no longer be available when the contractual period expires. This may also be due to technical prerequisites. There is therefore no entitlement to the continuous provision of functions and Digital Extras.
The described functions may be modified, optimised and adapted after the time of going to press.
Mercedes-Benz therefore reserves the right to introduce changes to functions and Digital Extras.
For these reasons, descriptions and depictions relating to the MBUX multimedia system may, in some cases, differ for your vehicle.

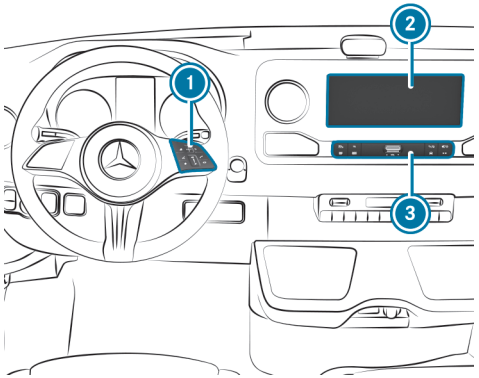

1. Touch Control and multimedia system control panel
2. Media display with touch functionality
3. Operating strip, calls up applications

A multimedia connection unit is found in the storage compartment in the centre console and has two type C USB ports (⟶ page 584).

YOU CAN OPERATE THE MULTIMEDIA SYSTEM WITH THE FOLLOWING CENTRAL CONTROL ELEMENTS:

- Touch Control 1
- Media display (touchscreen) 2
- Buttons on operating strip 3

ⓘ Alternatively, you can carry out a spoken dialogue with the MBUX Voice Assistant (⟶ page 465).

Multiple applications are available for you. You can call these up using the home screen or using the buttons on operating strip 3.

You can conveniently call up and add your favourites using the ☆ button on the steering wheel. Quick-access in the home screen and in the applications serve to select functions more quickly.

If you use the learning function of the multimedia system, you will receive suggestions during operation of the most probable navigation destinations, radio stations and contacts. The configuration of the suggestions takes place in your profile. You can compile your profile from various vehicle settings and settings of the multimedia system.

The Notifications Centre collects incoming notifications, e.g. about an available software update. Depending on the type of notification it offers various actions. You can call up the Notifications Centre on the home screen and in the menus of the applications.

With the global search in the vehicle you can search on-board across many categories as well as online in the Internet. You can use the global search in the home screen and in the notifications.

ANTI-THEFT PROTECTION

This device is equipped with technical provisions to protect it against theft. More detailed information about anti-theft protection can be obtained at a qualified specialist workshop.

Home screen overview

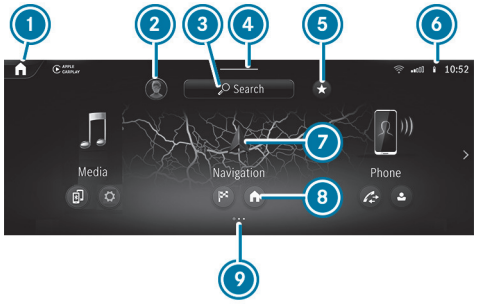

1. On the home screen: displays the first three applications
   In other displays: calls up the home screen
2. Calls up user profile settings and switches user
3. Uses the global search
4. Calls up the Control Centre: pull the bar down
5. Calls up favourites
6. Displays in the status line
7. Calls up an application
8. Quick-access to application
9. Index points for selected display area

THE FOLLOWING FUNCTIONS ARE CALLED UP IN THE CONTROL CENTRE:

- Notifications Centre
- Favourites
- Vehicle quick-access

In the image, the applications are arranged as a carousel. Pressing and holding on [⌂] arranges the applications in a grid. This view is also used by a smartphone, for example.

Touch Control

OPERATING TOUCH CONTROL (MULTIMEDIA SYSTEM)

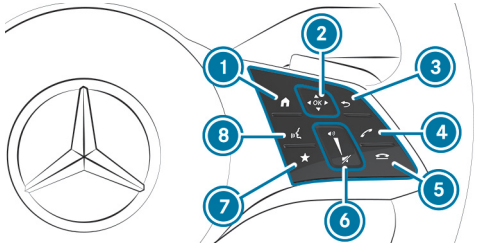

1. [⌂] Shows the home screen
2. Touch Control
   [◀] [▲] [▶] [▼] Swipe in the direction of the arrow (navigate)
   [OK] Press (confirm)
3. [↩] Returns to the previous display
4. [📞] Makes or accepts a call
5. [☎] Rejects or ends a call
6. To increase volume: swipe upwards
   To reduce volume: swipe down
   [🔇] To switch off the sound: press
7. [★] Calls up favourites
8. [🎤] Starts the MBUX Voice Assistant

ⓘ To operate Touch Control ② in the most effective way, use the tip of your thumb if possible.

You can navigate through menus and lists via the touch-sensitive surface of Touch Control ② using **a single-finger swipe**, for example:

- **To enter a character:** select a character using the keyboard and press on Touch Control ②.
- **To select a menu option:** scroll in a list and press Touch Control ②.
- **To move the digital map:** swipe in any direction.

SETTING THE SENSITIVITY FOR THE TOUCH CONTROL

Multimedia system:

→ ⌂ ▸▸ Settings ▸▸ System ▸▸ Control elements ▸▸ Touch Control sensitivity

- Select Fast, Medium or Slow.

Touchscreen

OPERATING THE TOUCHSCREEN

TAPPING

- **To select a menu item or entry:** tap on a symbol or an entry.
- **To increase the map scale:** tap twice quickly with one finger.
- **To reduce the map scale:** tap with two fingers.
- **To enter characters with the keyboard:** tap on a button.

SINGLE-FINGER SWIPE

- **To navigate in menus:** swipe up, down, left or right.
- **To move the digital map:** swipe in any direction.

TWO-FINGER SWIPE

- **To zoom in and out of the map:** move two fingers together or apart.
- **To enlarge or reduce the size of a section of a website:** move two fingers together or apart.
- **To turn the map:** turn anti-clockwise or clockwise using two fingers.

TOUCHING, HOLDING AND MOVING

- **To move the map:** touch the touchscreen and move your finger in any direction.
- **To set the volume on a scale:** touch the touchscreen and move the finger to the left or right.

TOUCHING AND HOLDING

- **To save the destination in the map:** touch the touchscreen and hold until a message is shown.
- **To call up a global menu in the applications:** touch the touchscreen and hold until the OPTIONS menu appears.

Applications

CALLING UP APPLICATIONS

USING BUTTONS ON THE OPERATING STRIP

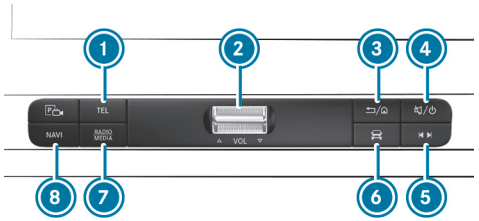

1. TEL button
   Calls up the telephone (button to the left without function)
2. Volume rocker switch
   Adjusts the volume (→ page 489)
3. ⇦/⌂ button
   Press briefly: returns to the previous display
   Press and hold: calls up the home screen
4. 🔇/⏻ button
   Press briefly: switches sound off
   Press and hold: activates or deactivates the multimedia system
5. Quick-access button for media
   Calls up the control menu of the last active media source
6. Vehicle button
   Sets vehicle functions
7. RADIO MEDIA button
   Pressing repeatedly calls up the desired audio source
8. NAVI button
   Calls up navigation

- **To access stations and music tracks quickly:** press button 5.
  The control menu appears for the audio source that was last selected.
- Swipe to the left or right.
  Radio: the previous or next station is set.
  Media source: the previous or the next music track is selected.
- **To hide the control menu:** press button 5.

USING THE HOME SCREEN

The home screen is shown in the media display when you start the vehicle.

- Select the application by swiping and tapping.

or

- **In any display:** press the ⌂ button on the Touch Control.

or

- Tap on the ⌂ symbol on the touchscreen.
  The applications are displayed.
- Select the application by swiping and tapping.

CHANGING THE ARRANGEMENT OF APPLICATIONS ON THE HOME SCREEN

- Call up the home screen.
- Touch and hold an application on the touchscreen until symbols appear.
- Tap on ◀ or ▶ and move the application in the menu.
- Tap on ✔.

Switching the sound for the MBUX multimedia system on or off

ON THE MULTIFUNCTION STEERING WHEEL

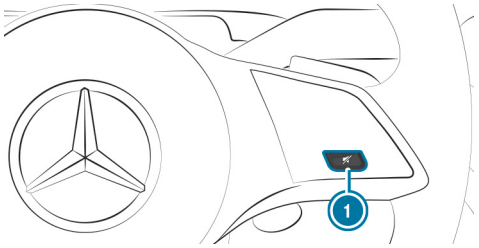

- **To switch off:** press button (1) on the steering wheel.
  The current audio source is muted.
  The [ ] symbol appears in the status line of the media display.

If you are listening to a radio station, for example, and switch off the sound then all media sources will be muted.

Traffic and navigation announcements can still be heard in this case. The MBUX Voice Assistant and telephony are also not affected.

- **To switch on:** press button (1) on the steering wheel again.

> ⓘ If you adjust the volume or change the media source, the sound will also be switched on.

USING BUTTONS ON THE OPERATING STRIP

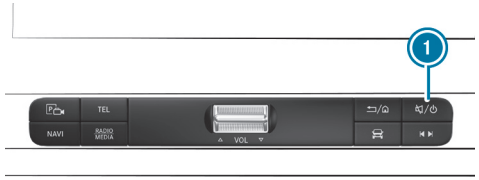

- **To switch off:** briefly press button (1).
  The [ ] symbol appears in the status line of the media display.
- **To switch on:** briefly press button (1) or change the media source.

Adjusting the volume

ON THE MULTIFUNCTION STEERING WHEEL

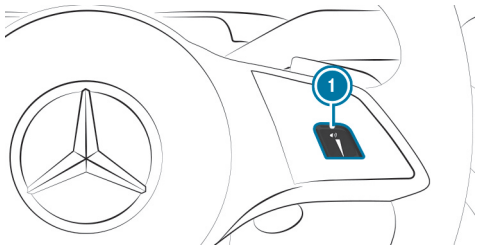

- Swipe across button (1).

USING BUTTONS ON THE OPERATING STRIP

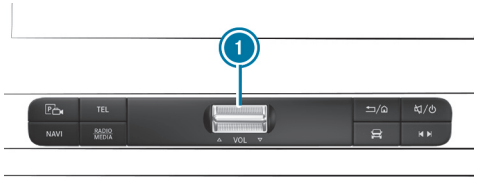

- **To increase or decrease the volume in steps:** briefly press rocker switch (1) up or down.
- **To increase or decrease the volume continuously:** press and hold rocker switch (1) up or down until the desired volume is set.

THE VOLUME IS ADJUSTED FOR THE FOLLOWING GROUPS:

- Entertainment
- Ringtone
- Calls, for example phone calls
- Voice output, for example MBUX Voice Assistant
- Navigation announcements

ⓘ If you set the volume of the voice output to "0", for example, a minimum volume is automatically set when the MBUX Voice Assistant is next called up. The entertainment volume is automatically adjusted after the multimedia system is restarted.

Intelligent body control (MBAC)

FUNCTION OF MERCEDES-BENZ ADVANCED CONTROL (MBAC)

MBAC allows you to operate a range of applications in your camper van and to carry out status checks.

DEPENDING ON THE VEHICLE'S EQUIPMENT AND THE CONFIGURATION OF MBAC, THE FOLLOWING TABS ARE AVAILABLE, FOR EXAMPLE:

- Overview
- Living
- Lights
- Supply
- Vehicle
- Settings

The available menus can be called up directly via the corresponding tile. You can use the menus, for example, to switch the heating on or check fluid levels.

Once you have installed the Mercedes-Benz App for Sprinter and Marco Polo, you can also operate the menus with your smartphone. Some functions in the app may be unavailable or only partially available.

ⓘ The Mercedes-Benz App for Sprinter and Marco Polo is only available for iOS and Android devices.

ⓘ If you wish to have components retrofitted or the contents of the MBAC modified, contact the camper van manufacturer or dealer.

CALLING UP AND OPERATING MBAC

Multimedia system:

Favourites ▶▶ MBAC

- The Overview menu is displayed.

  The various menus can be called up using the available tiles.

> ⓘ Different menus will be displayed depending on the vehicle's equipment and the configuration of MBAC.

USING APPLICATIONS

Various functions such as lighting, heating or sound system can be controlled, depending on the configuration of MBAC.

- Call up the desired function using the corresponding tile.
- Adjust the settings as required.

CHECKING THE STATUS

The status of the fresh or grey water or of the auxiliary battery, for example, can be called up, depending on the configuration of MBAC.

- Call up the desired status display using the corresponding tile.

  Depending on the selected function, the status will be displayed in the form of text, a graph or an image.

USING THE MENUS

USING THE APPLICATIONS

The lighting, heating or sound system, for example, can be operated depending on the configuration of MBAC.

- Call up the desired menu using the corresponding tab.
- Select an application from the list.
- Modify the settings as desired using the available control elements.

CHECKING THE STATUS

The status of the fresh or grey water or of the auxiliary battery, for example, can be called up depending on the configuration of MBAC.

- Select the desired menu using the corresponding tab.
- Select a status from the list.

  Depending on the chosen function, the status will be displayed in the form of text, a graph or an image.

NOTES ON THE BODY MANUFACTURER'S EQUIPMENT

Always observe the body manufacturer's operating instructions. You could otherwise fail to recognise dangers.

Profile

NOTES ON USER PROFILES

WARNING
Risk of becoming trapped during adjustment of the driver's seat after calling up a driver profile

Selecting a user profile may trigger an adjustment of the driver's seat to the position saved under the user profile. You or other vehicle occupants could be injured in the process.

► Make sure that when the position of driver's seat is being adjusted using the multimedia system, no people or body parts are in the seat's range of movement.

If there is a risk of someone becoming trapped, immediately stop the adjustment process by:

► a) Tapping on the warning message on the media display.

or

► b) Pressing a position button of the memory function or a seat adjustment switch in the driver's door.
The adjustment process is stopped.

The driver's seat is equipped with an automatic reversing function.

If the driver's door is open, the driver's seat will **not** be set after calling up the driver's profile.

OVERVIEW OF USER PROFILES

REQUIREMENTS FOR USE

- You have registered with a Mercedes me ID and confirmed the terms of use.
- Your Mercedes me ID is linked to the vehicle.
- You have a Mercedes me ID PIN.

ⓘ If one of the pre-requisites listed is missing or if no user profile has been selected, the data described in the following section will be saved in the vehicle as the standard setting. Standard settings can be changed by all vehicle users.

User profiles save personal settings. If the vehicle is used by several people, a person can change their profile settings without changing the settings of other users.

You can individualise a user profile in the vehicle using the set-up assistant or using the settings in your user profile. Some settings such as the Mercedes me ID PIN and a profile photo are made in the Mercedes-Benz App or in the Mercedes-Benz Portal.

ⓘ If the user profile is downloaded while travelling, user profiles are not set up using the set-up assistant.

User-specific content and applications with personal data are protected by different levels of security (→ page 493).

To access protected content, the Mercedes me ID PIN and, depending on the vehicle equipment, biometric sensors are used.

ⓘ The security level is set by the multimedia system and calculated from the combination of all sensor inputs. Some security levels cannot be turned off.

ⓘ **WHEN A USER PROFILE IS ACTIVATED, THE FOLLOWING PERSONALISED COMFORT SYSTEMS, FOR EXAMPLE, CAN BE ADJUSTED OR THEIR SETTINGS LOADED:**

- Seat
- Outside mirrors
- Air conditioning adjustment

If the user profile is activated when driving, the driver's seat position will not be adjusted.

USER-SPECIFIC CONTENT

DEPENDING ON THE VEHICLE EQUIPMENT YOU CAN, AS A USER, SAVE THE FOLLOWING SETTINGS, FOR EXAMPLE:

- Driver's seat, steering wheel and mirror settings
- Climate control
- Radio (including station list)
- Suggestions and favourites

ADDING A USER

Requirements:

- The vehicle is stationary.

Multimedia system:

Select user

▶ Select ⊕ Add user.

A QR code is loaded.

▶ Scan the displayed QR code with the Mercedes-Benz App or any QR code scanner on a mobile device. If the Mercedes-Benz App is not yet installed on your mobile device, you will be directed to the store on your mobile device.

▶ Follow the steps in the Mercedes-Benz App.

The vehicle is linked to your Mercedes me ID. This automatically creates your user profile in the vehicle.

You will be informed when your user profile is available.

When the vehicle is stationary, the set-up assistant starts automatically after user selection.

ⓘ When the user has been added, they can be selected (→ page 496).

SELECTING USER OPTIONS

Multimedia system:

Settings

PROTECTING USER-SPECIFIC CONTENT AND APPLICATIONS

If you add a new user, access protection is already activated for the user profile. The Mercedes me ID PIN and, depending on the vehicle equipment, biometric sensors are available for access. Biometric sensors in the vehicle must be taught in. The authentication process then takes all taught-in and available sensors into account.

THE FOLLOWING USER-SPECIFIC CONTENT AND APPLICATIONS ARE PROTECTED, FOR EXAMPLE:

- User selection and user profile settings
- Biometric sensors

  The teaching-in of biometric sensors

  For teaching in and editing biometric recognition see the following section.
- Suggestions

  The data and determination of the most probable navigation destinations, media sources, radio stations, contacts and messages.
- Parking service

  The payment transactions.
- Mercedes-Benz Store

  The purchase of Digital Extras
- System activations of paid vehicle functions

IN THE FOLLOWING CASES, YOU WILL BE PROMPTED TO AUTHENTICATE OR RE-AUTHENTICATE USING A SENSOR OR THE MERCEDES ME ID PIN:

- When selecting a protected user profile
- When calling a function requiring special protection
- If biometric sensors provide insufficient or contradictory information
- If the multimedia system no longer trusts a sensor
- If the seat belt buckle and the door are opened at the same seat and a function requiring special protection is called up
- When the vehicle is locked from outside

ⓘ Facial recognition for re-authentication in the driver's seat is only possible once the door has been closed or the seat belt buckle has been fastened.

▶ Select Protect content.

▶ Switch Access protection on or off.

ⓘ When access protection is switched off, your user profile can be viewed from any seat and changes can be made.

ⓘ Access protection is switched on or off on a vehicle-specific basis.

ⓘ Please note that authentication is necessary for several functions such as In-Car Office and cannot therefore be completely switched off.

SETTING UP AND EDITING BIOMETRIC RECOGNITION

The biometric data models are saved in the sensors in the vehicle. If recognition has been set up, this sensor serves as a contributory factor for authentication on the multimedia system.

▶ Select Protect content.

▶ Select Voice recognition.

▶ Select Facial recognition.

ⓘ If necessary, authenticate yourself on the multimedia system.

SETTING UP FACIAL RECOGNITION

- Follow the system's instructions.

  Your face is scanned. A message in the driver display or central display shows whether facial recognition was successful or not. You can unlock your user profile and protected applications with the facial scan.

SETTING UP VOICE RECOGNITION

- Speak the sentence shown on the media display and follow the voice assistant's instructions.

  If voice recognition was successful, a message appears on the media display. You can unlock your user profile.

ⓘ Avoid background or disturbing noises during voice recognition.

DELETING BIOMETRIC DATA

- Tap on 🗑 behind Voice recognition.
- Select Yes.

CALLING UP THE SET-UP ASSISTANT

- Select Profile.
- Select Set-up assistant.
- Follow the directions from the set-up assistant.

CHANGING USER NAME OR PROFILE PHOTO

- Select Profile.
- Select Change user name.

or

- Select Profile picture.
- Enter the user name or select a user image.
- Select Finished.

ⓘ You can save your photo for your Mercedes me ID in the Mercedes-Benz App or in the Mercedes-Benz Portal. The photo will then be shown in the vehicle. In the vehicle itself, you can select other sample images instead of the photo.

DELETING A USER PROFILE

- Select Profile.
- Select Remove.
- Select Remove user profile.

ⓘ Your Mercedes me ID and your personal data are retained in the Mercedes-Benz ecosystem.

RESETTING THE USER PROFILE TO FACTORY SETTINGS

- Select Profile.
- Select Reset.
- Select Yes.

ⓘ This resets the contents of the user profile to factory settings, but not the vehicle.

SELECTING A USER

Multimedia system:

> When you call up your driver profile, the driver's seat and the steering wheel can be set.
>
> **YOU CAN CANCEL THE SETTING PROCESS WITH THE FOLLOWING ACTIONS:**
>
> - Tap on the Tap here to cancel. message on the media display.
> - Press one of the seat operating buttons in the driver's door.

- Select Select user.
- Select a user.
- When requested to do so, authenticate with the Mercedes me ID PIN or a taught-in biometric characteristic.

  The user profile is loaded and activated.

> If you select Continue without selecting user, no specific settings for the user profile are loaded.

SYNCHRONISING USER PROFILES

Requirements:

- You have a Mercedes me ID.
- The vehicle is linked to your Mercedes me ID.

Multimedia system:

- Activate Synchronise automatically.

  When the vehicle is switched on or off, the data stored in the vehicle is automatically synchronised with your Mercedes me ID. Synchronisation applies to all user profiles and is not specific to a particular profile.

or

- Select Synchronise now.

  The data stored in the vehicle is synchronised with your Mercedes me ID after selecting this option.

> Not all user profile functions are available during synchronisation.

> **IF THE DIGITAL EXTRA PERSONALISATION IS DEACTIVATED IN THE VEHICLE, ONLY THE FOLLOWING USER PROFILE MASTER DATA IS SYNCHRONISED:**
>
> - Profile name
> - Profile image
> - Mercedes me ID PIN

Favourites

OVERVIEW OF FAVOURITES

Favourites offer you quick access to frequently used applications. 100 favourites are available in total.

You can select favourites from categories or you add favourites directly from an application.

CALLING UP FAVOURITES
Multimedia system:

- Alternatively, in the home screen pull down bar ④ in the centre of the status line (→ page 486).
- Select ★ in the Control Center.

ADDING FAVOURITES
Multimedia system:

SELECTING FAVOURITES FROM CATEGORIES

- Select >.
- Select + Create new favourite.
- Select the category.
- Select a favourite.
  The favourite is stored at the next available position.
- **All positions in the favourites are taken:** confirm the message shown.
  A list shows all the favourites.
- Select a favourite which should be overwritten.

ADDING A FAVOURITE FROM AN APPLICATION
You can, for example, save a contact (example).

- **To save a contact as a global favourite:** select a contact (→ page 562).
- Press on a telephone number until a menu is shown.
- Select Save as favourite.
  The contact is added as a favourite.

RENAMING FAVOURITES
Multimedia system:

- Press on a favourite until a menu is shown.
- Select Rename.
- Enter the name.
- Save the names.

MOVING FAVOURITES
Multimedia system:

- Press on a favourite until a menu is shown.
- Select Move.
- Move the favourite to the new position.
- Tap on ✓.

DELETING FAVOURITES
Multimedia system:

- Press on a favourite until a menu is shown.
- Select Delete.
- Select Yes.

RESETTING FAVOURITES

► In the menu, select Reset all favourites.

► Select Yes.

Notifications Centre

OVERVIEW OF THE NOTIFICATIONS CENTRE

THE FOLLOWING COMMUNICATIONS ARE COLLECTED IN THE NOTIFICATIONS CENTRE:

- Communications which are generated by the vehicle or from multimedia system.
- Communications which are received through the use of services.

THE FOLLOWING NOTIFICATION TYPES ARE AVAILABLE FOR YOU:

- Navigable destinations and routes
- Messages (text messages)
- Calendar entries and reminders, e.g. from In-Car Office
  This function is not available in all countries.
- System information, e.g. Important software update available. Confirm to start the update.
- Other notifications, e.g. from additional online services that can be subscribed to or emergency reports (e.g. tornado)

The Notifications Centre is in the Control Centre.

Depending on the style set, newly received notifications are shown using a coloured dot.

Notifications are normally briefly shown as they are received. If you take no action, these are stored for future access in the Notifications Centre.

The notifications are sorted chronologically. The most recent notifications are at the top.

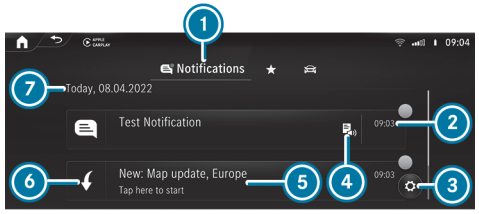

Example of a message

1. Calls up the Notifications Centre
2. Time message received
3. Calls up the settings
4. Display for available actions
5. Description of the notification and the issuing service
6. Symbol for the type of notification
7. Date of the received notifications

Depending on the type of notification, up to four different actions are available.

EXAMPLES OF ACTIONS INCLUDE:

- Reading aloud
- Placing a call
- Replying
- Calling up a web page
- Navigating

Some notifications, e.g. a navigation destination, are stored longer. Therefore, it is not necessary to carry out available actions directly upon receipt of the notifications. A route guidance can be started at a later time.

You can pin a notification so that this is not deleted automatically after a certain time (→ page 499).

CALLING UP NOTIFICATIONS

OPENING THE NOTIFICATIONS CENTRE

- Select [ ] in the Control Center.

SELECTING A NOTIFICATION

- If several messages are available swipe up or down.
- Select an action.

CLOSING THE NOTIFICATIONS CENTRE

- Select [ ].

SELECTING ACTIONS FOR A NOTIFICATION

THE FOLLOWING OPTIONS ARE AVAILABLE:

- Select the action directly after a notification is received and shown.
- Select the action later after calling up in the Notifications Centre.

- Up to two actions available: select the action.
- More than two actions available: select [ ].
- Select the action.
  The notification is still available.
- Close the actions with [ ].

EDITING NOTIFICATIONS

- Call up the Notifications Centre (→ page 499).

CONFIGURING SETTINGS

- Select [ ] Settings .
- Select the service.
- Switch the options on or off.

  THE FOLLOWING OPTIONS ARE AVAILABLE DEPENDING ON THE SERVICE:

  - Allow notifications
  - Display in notification centre
  - Show notifications
  - Switch Acoustic signals on or off
  - External access
    The option allows an external service access to specific data, e.g. the current vehicle position. The detailed, approved information is shown with ⓘ.

  If Allow notifications is switched off, the options cannot be selected with the exception of External access.

PINNING A NOTIFICATION

- Drag a notification to the right on the touchscreen.
  A pin appears.
- Tap on the pin.
  The notification is marked with a pin.

DELETING NOTIFICATIONS

- Drag a notification to the left on the touchscreen.

or

- Select [🗑].
- Select Yes.

  All messages are deleted.

Global search

GLOBAL SEARCH OVERVIEW

You can call up the global search on the home screen. You can enter characters using the keyboard.

Alternatively, the MBUX Voice Assistant allows voice input.

THE GLOBAL SEARCH PROVIDES SEARCH RESULTS FOR THE FOLLOWING CATEGORIES:

- Navigation
- Entertainment
- Phone, In-Car Office

  In-Car Office is not available in all countries.
- Digital Operating Instructions
- Website

The global search enables you to search for towns, roads and tourist attractions in the navigation category, for example.

If the search field is empty, you will first see smart suggestions in the Suggestions category.

The prerequisite for this is that the smart suggestions are activated in the system settings (⟶ page 510).

As soon as a letter is entered, you will be shown the best hits in the All category. You will find further search results in the individual categories. Next to the category is the number of results.

After selecting a category you can select the search results within the category. When you select a search result, a detailed view is opened depending on the category.

USING THE GLOBAL SEARCH

Multimedia system:

In the Suggestions category up to six smart suggestions are displayed, even if no search entry has been entered yet.

- Enter the search term into the search field.

  As soon as a character is entered the All category is marked. Up to ten search results per category are displayed there.

  In the other categories suitable search results for the entered search item are displayed.

> ⓘ Alternatively, the MBUX Voice Assistant allows voice input via [🎤] (⟶ page 501).

- **To end the search:** select [OK].
- **To show search results for a category:** select a category.
- **To accept the search result:** select the search result.

  An action starts, e.g. a radio station is set or a detailed view is displayed, e.g. for a contact.

Entering characters

USING THE CHARACTER INPUT FUNCTION

Enter the characters on the Touch Control or on the touchscreen. Character input can be started with a control element and resumed with another.

► When the keypad is shown, enter the characters by swiping and pressing on the Touch Control or by tapping on the touchscreen.

Examples for character input include entering a navigation destination or renaming a favourite, for example.

ENTERING CHARACTERS ON THE TOUCHSCREEN

Requirements

- An online connection is required for some functions.

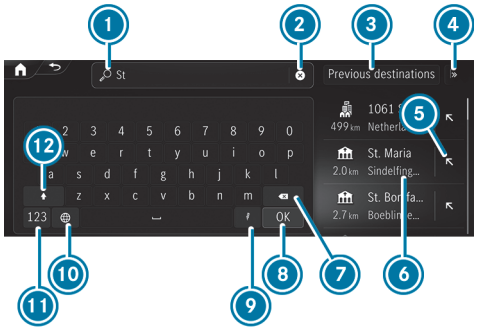

Character input with the keypad (destination entry)

1. Input line with current input
2. Deletes an entry
3. Selects previous destinations
4. Displays and selects additional destination searches
5. Adopts the search result in the input line and continues the search
6. Search result
7. Deletes the last character entered
8. Hides the keypad
9. Activates voice input
10. Sets the written language
11. Switches to digits and special characters
12. Switches to upper-case or lower-case letters

► Example: call up the navigation and enter a destination address (⟶ page 50).

► Briefly press on a character.
The character is entered in input line 1.

► Resume character input.

ⓘ The available editing functions depend on the editing task, the language set and the character level.

ENTERING ALTERNATIVE CHARACTERS

► Press and hold a character.

► Select the character.

ENDING CHARACTER INPUT

► Hide keypad 8 .

SETTING THE KEYBOARD FOR CHARACTER ENTRY

Multimedia system:

Settings ▶▶ System ▶▶ Keyboards

SETTING THE KEYBOARD LANGUAGE

- Select Keyboard languages.
- Select one or more keyboard languages.

DELETING THE USER DICTIONARY

The user dictionary learns from your inputs and offers suggestions during character input. You can reset the user dictionary.

- Select Reset my dictionary.
- Select Yes.

Driver camera

Overview of the driver camera

WARNING
Risk of injury from infrared radiation from the camera

This product uses an infrared lighting system of risk group 0 (RG0). If the housing is opened or damaged, infrared radiation may damage your retina.

- Do not open the housing.
- Always have maintenance work and repairs carried out by a qualified specialist workshop.

This device is a product of risk group 0 (RG0) according to IEC 62471:2006 (First Edition) & DIN EN 62471:2008.
The driver camera is located above or behind the media display.

THE DRIVER CAMERA DETECTS THE FOLLOWING CHARACTERISTICS:

- Head position
- Viewing direction
- Eyelid closure characteristics
- Driver's face

The driver camera is automatically activated each time the vehicle is opened with the key.

The current status of the driver camera is shown in the status line of the central display.

The driver camera records image data for applications such as ATTENTION ASSIST and facial recognition, for example.
The driver camera converts the image data directly into meta data. No image data is saved in the process. The data is only processed in the vehicle and is not transmitted from the vehicle.

The driver camera must be set up for facial recognition before use (→ page 493).

SYSTEM LIMITS

THE SYSTEM MAY BE IMPAIRED OR INOPERATIVE IN THE FOLLOWING SITUATIONS:

- The driver camera is covered or dirty, misted up or scratched.
- The driver's face and/or eyes are covered.
- The driver is wearing glasses that block infrared.

DISPLAY MESSAGES

IN THE FOLLOWING SITUATIONS DISPLAY MESSAGES MAY BE SHOWN:

- If the driver camera is not functioning.
  The driver camera is malfunctioning.
  The Driver camera inoperative See Owner's Manual message appears.

- If the view of the driver camera is reduced or restricted.

  The The camera's view of the driver is currently impeded Affected functions: see Owner's Manual message appears.

  The message can appear, for example, in the following cases:
  - The camera's view is obstructed, e.g. due to a scarf or hat being worn.
  - The driver is wearing glasses that block infrared.
  - If hair partially obstructs the eyes, e.g. as with a long fringe.
  - In the event of strong direct sunlight. The driver camera cannot detect the driver's eyes if the light-dark contrast is too strong.
  - When one or both hands are on top of the steering wheel (twelve o'clock position).

NOTES ON CARE

For the display, please comply with the notes on caring for the interior (→ page 626).

Switching the driver camera on/off

Multimedia system:

→ ⌂ ▶▶ Settings ▶▶ System ▶▶ Intelligent assistants ▶▶ Driver camera

The driver camera is automatically activated each time the vehicle is switched on.

▶ Switching the driver camera on ⊟ or off ⊟.

WHEN THE DRIVER CAMERA IS SWITCHED OFF OR THE SWITCH OFF DRIVER CAMERA? ATTENTION ASSIST WILL BE RESTRICTED **MESSAGE APPEARS, THE FOLLOWING FUNCTIONS ARE NOT AVAILABLE OR LIMITED:**

- The facial recognition

  This function serves as sensor input for authentication and unlocking of the user profile and protected applications (→ page 493).

System settings

Display

CONFIGURING DISPLAY SETTINGS

Multimedia system:

Settings ▶▶ System ▶▶ Displays & display messages

ADJUSTING THE BRIGHTNESS

▶ Select Display brightness.

Time and date

SETTING THE TIME ZONE

Multimedia system:

Settings ▶▶ System ▶▶ Time and date

▶ Select Time zone.

The list of countries is displayed.

ⓘ If there are several time zones available in a country, these will be shown after the country is selected.

▶ Select a country and, if required, a time zone.

The time zone set is displayed after Time zone.

or

▶ Select the Automatic time zone entry from the country list.

The time zone will be set automatically according to the vehicle location.

ⓘ The Automatic time zone option is available for vehicles with satellite reception.

SETTING SUMMER TIME

Multimedia system:

Settings ▶▶ System ▶▶ Time and date

▶ Select one of the options.

SETTING THE TIME AND DATE FORMAT

Multimedia system:

Settings ▶▶ System ▶▶ Time and date ▶▶ Set format

▶ Select a time and date format.

SETTING THE TIME AND DATE MANUALLY

Requirements:

- The vehicle does not have satellite reception.

Multimedia system:

Settings ▶▶ System ▶▶ Time and date

SETTING THE TIME

▶ Select Set time.

- Set a time.
- Press OK to confirm.

SETTING THE DATE

- Select Set date.
- Select a date.
- Press OK to confirm.

> On vehicles with satellite reception, the time and date settings are determined automatically based on the vehicle location and cannot be set manually.

ADJUSTING THE TIME

- Select Adjust time.
- Set a value.
- Press OK to confirm.

> The function is only available in vehicles with satellite reception.

Vehicle position

SWITCHING TRANSMISSION OF THE VEHICLE POSITION ON OR OFF

Requirements:

- The vehicle is linked to a Mercedes-Benz ID.
- At least one Digital Extra is activated for the vehicle, which customers and/or co-users can use to display the vehicle position via the respective user accesses.

With this setting, you decide whether the vehicle position will be transmitted in order to show it to users who have access to the Digital Extras for this vehicle.

> The function is country-dependent. For more information, consult a Mercedes-Benz service centre.

Multimedia system:

→ ⌂ ▸▸ Settings ▸▸ System ▸▸ Data protection

- Activate or deactivate the Transmit veh. position function.

> Alternatively, you can also switch the function on or off in the status line via [icon].

Bluetooth®

INFORMATION ABOUT BLUETOOTH®

Bluetooth® technology is a standard for short-range wireless data transfer up to approximately 10 m.

YOU CAN USE BLUETOOTH® TO CONNECT YOUR MOBILE PHONE TO THE MULTIMEDIA SYSTEM AND USE THE FOLLOWING FUNCTIONS, FOR EXAMPLE:

- Hands-free system with access to the following options:
  - Contacts (→ page 562)

- Call lists (⟶ page 564)
- Text messages (⟶ page 565)

- Internet connection (⟶ page 574)

Bluetooth® is a registered trademark of Bluetooth Special Interest Group (SIG) Inc.

ⓘ Internet connection via Bluetooth® is not available in all countries.

ACTIVATING/DEACTIVATING BLUETOOTH®
Multimedia system:
⟶ ⌂ ▶▶ Settings ▶▶ System ▶▶ Internet and Bluetooth
▶ Activate or deactivate Bluetooth.

Near Field Communication (NFC)

INFORMATION ON NEAR FIELD COMMUNICATION (NFC)
NFC enables short-range wireless data transfer or connection of a mobile phone with the multimedia system.

Further information can be found at: https://www.mercedes-benz-mobile.com/

SWITCHING NEAR-FIELD COMMUNICATION ON OR OFF
Multimedia system:
⟶ ⌂ ▶▶ Settings ▶▶ System ▶▶ Internet and Bluetooth
▶ Activate or deactivate NFC.

ⓘ Further information on connecting a mobile phone via the NFC interface (⟶ page 558).

Wi-Fi

WI-FI CONNECTION OVERVIEW
You can use Wi-Fi to set up a connection to the Internet or to external network devices.

ⓘ Availability of the function is dependent on the respective country of use.

GENERALLY, TWO TYPES OF WI-FI CONNECTION ARE AVAILABLE:

- **Using the multimedia system as a Wi-Fi hotspot**(⟶ page 508)
  The vehicle's multimedia system serves as Wi-Fi hotspot for mobile communication devices, such as smartphones or tablet PCs, for example.

- **Using a mobile communication device as a Wi-Fi hotspot (tethering)** (⟶ page 575)
  An external Wi-Fi hotspot is accessed for the Internet connection of the vehicle's multimedia system.

SWITCHING WI-FI ON OR OFF
Multimedia system:
⟶ ⌂ ▶▶ Settings ▶▶ System ▶▶ Internet and Bluetooth
▶ Select Wi-Fi.
The controller is to the right: Wi-Fi is switched on.

When Wi-Fi is switched on, you can connect the multimedia system with external hotspots or make it available as a hotspot for external devices.

When Wi-Fi is switched off, it is not possible to establish a hotspot connection.

ⓘ Availability of the function is dependent on the respective country of use.

USING THE MULTIMEDIA SYSTEM AS A WI-FI HOTSPOT

Requirements:

- The device to be connected supports at least one of the types of connection described.

  The connection types shown depend on the device to be connected. The function must be supported by the multimedia system and by the device to be connected. The type of connection must be selected on the multimedia system and on the device to be connected.

ⓘ The data volume of the vehicle or an already connected tethering device is used for the data connection.
Vehicle data volume: depending on the vehicle equipment, you can purchase a data package directly from a mobile phone network provider via the Mercedes-Benz Store. To be able to use the data package, you must conclude your own contract with a mobile phone network provider via the Mercedes-Benz Store. This can be terminated at any time and incurs no costs. This contract is a prerequisite for using the services from the previously purchased package. The availability of this option is dependent on the country.

If the data package option is not available or can be upgraded, you can purchase data volume directly from the mobile phone network provider for a fee.

ⓘ Some functions may first need to be activated on the device being connected. More detailed information can be found in the manufacturer's operating instructions.

ⓘ The use of the vehicle data tariff by external devices is not available in all countries.

Multimedia system:

⟶ ⌂ ▸▸ Settings ▸▸ System ▸▸ Internet and Bluetooth

▶ Select MBUX hotspot.

▶ Select one of the following connection options.

CONNECTING USING A QR CODE

Requirement: an app for scanning the QR code is installed on the device being connected.

Alternatively: the device being connected has an integrated QR code scanner (see the manufacturer's operating instructions).

▶ Scan the QR code shown.

The Wi-Fi connection is established.

CONNECTING USING NFC

▶ Activate NFC on the device to be connected.

- When the NFC symbol is displayed in the MBUX hotspot menu, hold the device to be connected to the NFC interface.
- Follow the instructions on the device.
  The Wi-Fi connection is established.

CONNECTING USING A SECURITY KEY

- Select the vehicle from the device to be connected. The vehicle is displayed with the MBUX XXXXX network name.
- Enter the security key which is shown in the media display on the device to be connected.
- Confirm the entry.

GENERATING A NEW SECURITY KEY

- Select the Generate new security key option in the MBUX hotspot menu.
- Confirm the prompt with Yes.
  A new security key is generated.

A connection will be established with the newly created security key.

> ⓘ When a new security key is generated, all existing Wi-Fi connections are then disconnected. If the Wi-Fi connections are being re-established, the new security key must be entered.

System language

NOTES ON THE SYSTEM LANGUAGE

This function allows you to determine the language for the menus and the navigation announcements. The selected language affects the characters available for entry. The navigation announcements are not available in all languages. If a language is not available, the navigation announcements will be in English.

SETTING THE LANGUAGE

Multimedia system:

→ ⌂ ▶▶ Settings ▶▶ System ▶▶ Language

SETTING THE SYSTEM LANGUAGE

A list of the available system languages is shown.

- Select a language.
  The system language is switched to the selected language.

Setting the distance unit

Multimedia system:

→ ⌂ ▶▶ Settings ▶▶ System ▶▶ Displays and appearance

> ⓘ This function is not available in all countries.

- Select a unit for the distance.

Activating/deactivating system PIN protection

Multimedia system:

→ ⌂ ▶▶ Settings ▶▶ System ▶▶ Data protection ▶▶ System PIN

SETTING THE SYSTEM PIN

- Select Set PIN.
- Enter a four-digit system PIN.

- Enter the four-digit system PIN again.
  If both system PINs match, then the system PIN protection is active.

CHANGING THE SYSTEM PIN

- Select Change settings.
- Enter the current system PIN.
- Select Change PIN.
- Set a new system PIN.

ACTIVATING SYSTEM PIN PROTECTION FOR SOFTWARE UPDATES

- Select Protect software updates.
- Activate or deactivate the function.

Configuring suggestions

Multimedia system:

Settings ▶▶ System ▶▶ Suggestions

- Select ⚙.
- Switch the options on or off individually.
  If an option is switched on and sufficient data has been gathered, personalised suggestions based on your user behaviour will be offered to you. These are, for example, navigation destinations visited, phone numbers dialled as well as suggestions based on your music preferences.

  Navigation

  When Allow destination suggestions is switched on, the vehicle makes suggestions based on your visited navigation destinations.

  If Commuter route is switched on, the navigation automatically detects that the vehicle is on a commuter route.

  Calls & messages

  Suggestions are offered for numbers dialled and messages sent.

  Comfort

  The vehicle makes suggestions based on the use of your comfort functions.

  Entertainment

  Suggestions are offered for the currently played media source. Suggestions are also made for online digital services, e.g. Spotify, TuneIn Radio and streaming services, and for categories, e.g. genre, artist and mood.

  Vehicle

  The suggestions for vehicle functions are displayed, e.g. for Parking Assist PARKTRONIC.

  Online voice services

  The suggestions are made available online based on your voice input and are offered on the zero layer.

ⓘ The suggestions offered depend on the equipment.

Deleting collected suggestions

Multimedia system:

Settings ▶▶ System ▶▶ Suggestions

- Select ↺.
- Select Yes.
  The suggestions are reset.

Software update

INFORMATION ON SOFTWARE UPDATES

Software updates keep your vehicle and the related systems up-to-date and prevent security flaws.

Software updates are available for vehicle components such as control units, convenience systems, locking and safety systems, driver assistance systems, suspension and drive systems as well as for the MBUX multimedia system.

Software updates are available online via the communication module or a Wi-Fi connection to an external hotspot.

The navigation maps are also updated via updates from external storage media (e.g. USB flash drive).

Install available software updates regularly. Otherwise the security of your MBUX multimedia system and individual vehicle components cannot be ensured.

ⓘ Software updates can be protected with a system PIN. Further information about the system PIN (⟶ page 509).

Further information on software updates can be found at: https://me.secure.mercedes-benz.com

CARRYING OUT SOFTWARE UPDATES

Requirements:

FOR SOFTWARE UPDATES VIA THE COMMUNICATION MODULE AND WLAN:

- Your vehicle is linked to a Mercedes-Benz ID (⟶ page 481).
- Software updates without Mercedes-Benz ID: the Allow software updates option in the Software update menu is activated.
- For software updates via the communication module: an Internet connection exists via the communication module (⟶ page 575).
- For software updates via WLAN: a connection to an external WLAN hotspot exists (⟶ page 575).

ⓘ Depending on the software update, this is started via the communication module, WLAN or external storage medium.

ⓘ Online software updates cannot be performed via external Wi-Fi hotspots that are encrypted via TKIP.

ⓘ If the WLAN hotspot requires logging in via the browser, once the connection is successfully established the browser will open in order to start the update. Follow the instructions in the browser in order to start the download.

Multimedia system:

Settings ▸▸ System ▸▸ Software update ▸▸

STARTING A MAP UPDATE FROM AN EXTERNAL STORAGE MEDIUM

▶ Connect the storage medium with the vehicle via a media interface.

A message about an available map update appears on the media display.

▶ Select the message.

- Select Start.
  The map update is started.

STARTING THE SOFTWARE UPDATE VIA THE COMMUNICATION MODULE
If the Automatic online update option is active, available software updates are downloaded and installed automatically. Activate the option in order to always keep your vehicle up-to-date and avoid security flaws.

- Select Automatic online update.
  The software update is downloaded and installed automatically.

If the option is deactivated, you will be informed of new software updates once. The updates are available for downloading for a limited period of time.

- Select an update from the list of available updates.
- Start the update.
  The software update is downloaded and installed automatically.

STARTING A SOFTWARE UPDATE VIA WLAN
Some software updates require an additional connection to a WLAN hotspot. The connection to an external hotspot can be established when the software update is started.

- Select an update from the list of available updates.
- Start the update.
- Establish the connection to a WLAN hotspot.
  The update is downloaded and installed automatically.

There are software updates that can only be installed when the vehicle is safely parked, there are no more people in the vehicle and the vehicle is locked.

FOR SOFTWARE UPDATES REQUIRING A SAFE VEHICLE STATUS
When the last installation step is completed, a message appears on the media display after the vehicle has been switched off.

- Follow the step-by-step instructions on the media display to complete the installation.

INSTALLING SOFTWARE UPDATES
Software updates are installed automatically after they are downloaded. As soon as the software update has been completed, a message appears on the media display. It may be necessary to restart the MBUX multimedia system.

Some software updates require a safe vehicle status for the installation to be completed. They can only be carried out in a safely parked vehicle with the vehicle switched off. If this is necessary, a message appears on the media display after the vehicle is switched off.

- Follow the instructions on the media display.

For some software updates, you can set a time for installation. The installation is carried out automatically at the scheduled time. You may not be in the vehicle during installation. Please observe that the planned installation can only start when the vehicle is locked.

If an installation is available where you can set the time, a message appears on the media display after the vehicle is switched off.

- Follow the instructions on the media display.

The vehicle cannot be used while these software updates are being installed. Make sure that no persons or animals are in the path of your vehicle. Events stored in the vehicle's control units can be overwritten.

AVAILABILITY OF THE MEDIA DISPLAY
During the installation of software updates, it is not possible to use the vehicle and media display. You may receive a display message when an installation is running.

> ⓘ The display message does not appear every time a software update is installed.

In rare cases, an error can occur during the installation. The multimedia system automatically attempts to restore the previous version.

If restoration of the previous version is not possible, a message appears on the display.

FAILURE OF THE MEDIA DISPLAY:
If the media display fails or the display message is shown continuously, several systems such as the reversing camera or climate control are no longer available. Drive on carefully and consult a specialist workshop as soon as possible.

Further information about software updates can be found at https://me.secure.mercedes-benz.com

Resetting the multimedia system (reset function)

> ⚠ **WARNING**
> Risk of accidents due to failure of multimedia display functions
>
> While the multimedia system is being reset, its functions such as the reversing camera are not available.
>
> ► Only reset the multimedia system when the vehicle is stationary.

Requirements

- The vehicle is switched on.
- Some settings can only be reset when the vehicle is stationary.

Multimedia system:
Settings ▸▸ System ▸▸ Reset

WHEN RESETTING THE SYSTEM, PERSONAL DATA AND SETTINGS ARE DELETED, FOR EXAMPLE:

- Connected devices
- Individual user profiles
- Biometric data

> ⓘ The data used and saved in the multimedia system by the driver assistance systems is deleted.

- Select Reset.
  A query appears asking if the system should really be reset.
- Select Yes.
  The multimedia system is reset to its state at delivery. The multimedia system is restarted after the system reset.

ⓘ Due to data protection, as well as the function of individual driving systems and driving safety systems, it is a requirement to carry out a complete system reset before selling the vehicle or transferring it to a third party, or after use as a hire car.

Vehicle information

Displaying vehicle data

Multimedia system:

Info

- Select Vehicle.

  The vehicle data is displayed.

Displaying engine data

Multimedia system:

Info

- Select Engine.

  The engine data is displayed.

> The actual maximum values that can be achieved for engine output and engine torque may deviate from the certified values within the country-specific guidelines for permissible tolerances (basis: UN-ECE No. 85 or country-specific guidelines).
>
> **ITEMS THAT CAN INFLUENCE THIS ARE, FOR EXAMPLE:**
>
> - Sea level
> - Fuel quality
> - Outside temperature
> - Operating temperature of the engine
>
> Adapt your driving style accordingly.
> The warning lamp in the instrument cluster remains on until the engine reaches operating temperature.

> The values displayed serve only as guidance. The values for engine output and engine torque shown in the media display may deviate from the actual values.

> The warning lamp to show the power output limitation after starting the vehicle is not available in all vehicle models.

Displaying the fuel consumption indicator

Multimedia system:

Info

- Select Consumption.

  The current and average fuel consumption will be displayed.

Off-road menu

Overview of the Offroad menu in the MBUX multimedia system

THE OFFROAD MENU SHOWS INFORMATION ON THE FOLLOWING TOPICS:

- Overview of the most important data of relevance to driving off-road.
- Supporting functions for driving off-road.

OFF-ROAD
This menu provides an overview of the most important data. Content is displayed in various tiles which can be changed using the direction arrows. What's more, this menu contains buttons for quick-access to certain vehicle functions which are relevant to off-road operation.

DISPLAYED DATA ARE, FOR EXAMPLE:

- Artificial horizon
- Compass
- Altitude
- Torque and power
- Tyre pressure and temperature
- Transparent bonnet

Setting the off-road menu in the multimedia system

Multimedia system:

Offroad

SETTING DISPLAYS IN THE CENTRAL DISPLAY

▶ Press ◁, ▷ or on the display itself to jump to the next display.

ⓘ The availability of individual functions depends on country and equipment.

QUICK-ACCESS: ACTIVATING OR DEACTIVATING PARKING ASSIST PARKTRONIC

▶ Press P to switch the function on or off.

ⓘ Further information on Parking Assist PARKTRONIC (⟶ page 407).

QUICK-ACCESS: ACTIVATING OR DEACTIVATING ESP® (ELECTRONIC STABILITY PROGRAM)

▶ Press OFF to switch the function on or off.

ⓘ Further information on ESP (⟶ page 375).

QUICK-ACCESS: ACTIVATING OR DEACTIVATING DSR (DOWNHILL SPEED REGULATION)

- Press DSR to switch the function on or off.

ⓘ Further information on DSR (→ page 386).

QUICK-ACCESS: SETTING THE VEHICLE LEVEL

- Press to raise or lower the vehicle.

ⓘ Additional information about vehicle level (→ page 344).

QUICK-ACCESS: SWITCHING THE OFF-ROAD CAMERA ON OR OFF

- Press to switch the function on or off.

ⓘ Further information on the off-road camera (→ page 418).

ⓘ The off-road camera can also be switched on or off using the button in the off-road control panel.

Navigation

Switching on navigation

Multimedia system:

Navigation

- Alternatively, switch on the MBUX Voice Assistant (→ page 465).
- Switch to navigation.
  The map appears.

> If you want to switch on navigation using either the NAVI button or a search result from the global search and the Activating navigation. Please wait... message appears on the media display, navigation is not installed. You can have the navigation system retrofitted at a Mercedes-Benz Service Centre.

Navigation overview

DIGITAL MAP

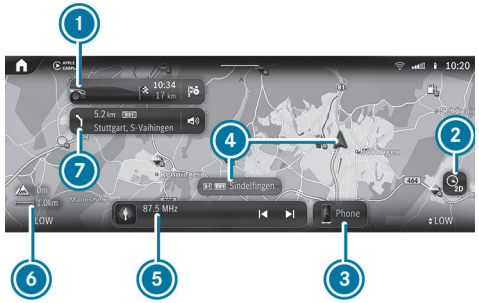

1. Navigation module (reduced view)
   Route guidance active:
   The navigation module shows the information relevant to the route in the zoomed-out view, e.g. the destination or a traffic delay
   ⊗ Ends the current route guidance
   Tapping opens the navigation module and displays the route overview (→ page 530)
2. Sets map orientation and map type
3. Calls up the telephone menu
4. Current vehicle position (vehicle symbol or arrow)
5. Calls up entertainment applications

6 Elevation and map scale (⟶ page 547)

7 Navigation window shows the next driving manoeuvre (zoomed out view) or the route monitor (zoomed in view)

Route guidance active: route monitor shows, e.g. route sections, upcoming driving manoeuvres with lane recommendations, destination, traffic delays, 3D images at motorway exits, online content

PRESSING 2 SEVERAL TIMES CHANGES THE MAP ORIENTATION IN THIS ORDER:

- 2D and to the north
- 2D and direction of travel
- 3D and direction of travel
- Map with complete route

ⓘ If the map is moved, the map switches between 3D direction of travel and 2D north orientation.

THE FOLLOWING MAP TYPES 2 ARE AVAILABLE:

- Daytime display
- Night-time display
- Satellite map

ⓘ If you notice a problem with the digital map, you can report it at https://mapfeedback.here.com/#/report.

Destination entry

NOTES ON DESTINATION ENTRY

⚠ **WARNING**
Risk of distraction from operating integrated communication equipment while the vehicle is in motion

If you operate communication equipment integrated in the vehicle when driving, you could be distracted from the traffic situation. This could also cause you to lose control of the vehicle.

► Only operate this equipment when the traffic situation permits.

► If you cannot be sure of this, stop the vehicle whilst paying attention to road and traffic conditions and operate the equipment with the vehicle stationary.

You must observe the legal requirements for the country in which you are currently driving when operating the multimedia system.

ENTERING A POI OR ADDRESS

Requirements

- **For the online search:**
  - There is an Internet connection.
  - Digital Extras are available.
  - You have created a Mercedes me ID.
  - The vehicle is linked to the Mercedes me ID and you have accepted the terms of use.
  - Further information can be found at: https://www.mercedes.me

- The Digital Extra is available and has been activated.

ⓘ If Online Search is not available, the search is performed using the data of the digital map.

Multimedia system:

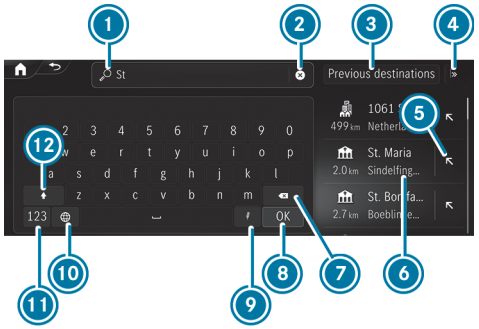

Example: entering a POI or address

1. Input line with current input
2. Deletes an entry
3. Selects previous destinations
4. Displays and selects additional destination searches
5. Adopts the search result in the input line and continues the search
6. Search result
7. Deletes the last character entered
8. Hides the keypad
9. Activates voice input
10. Sets the written language
11. Switches to digits and special characters
12. Switches to upper-case or lower-case letters

▶ Enter the destination. The entries can be made in any order.
The search results are displayed in a list.

ⓘ Online search results for POIs may contain additional information, for example opening times and ratings. The information is provided by an online map service.
This online function is not available in all countries.

THE FOLLOWING ENTRIES CAN BE MADE, FOR EXAMPLE IN ①:

- Town, street, house number or street, town
- Postcode
- POI name or POI category, e.g. Restaurants
- Town, POI name
- Contact name
- Geo-coordinates (⟶ page 523)

▶ Hide the keyboard with OK.

▶ Select the destination in the list.
The following menu shows the selected destination with the address information and a corresponding map section.
The menu enables the route to be calculated.

SELECTING A DESTINATION SUGGESTION

Requirements:

- The Allow destination suggestions option is switched on (⟶ page 510).

- The multimedia system has gathered sufficient data in order to show destination suggestions.

Multimedia system:

Navigation

▶ Select Suggestions.

The route is calculated in the following menu.

ⓘ If Suggestions has been selected, a menu is available via [•••]. The menu provides settings for suggestions and memory functions.

ⓘ Edit the destination suggestions (→ page 540).

SELECTING PREVIOUS DESTINATIONS

Multimedia system:

Navigation

▶ Select Previous destinations.

▶ Select the destination.

The following menu enables the route to be calculated.

ⓘ You can save a destination as a favourite (→ page 539).

SELECTING A POI

Requirements:

- **For use of personal POIs:** a USB device is connected with the multimedia system.
- Personal POIs with the GPS Exchange format (.gpx) have been saved in the PersonalPOI folder on the USB device.

Multimedia system:

Navigation

▶ Select POIs.

▶ Select one of the displayed quick-access categories, e.g. [P].

▶ Select the POI.

The following menu enables the route to be calculated.

or

▶ Select All categories or Personal POIs (see requirements).

▶ Select the category.

▶ Select the POI.

The following menu enables the route to be calculated.

SETTING A SEARCH FILTER AFTER SELECTING A POI CATEGORY

THE PRESET SEARCH POSITION DEPENDS ON THE STATUS OF THE ROUTE GUIDANCE:

- If route guidance is not active, In the vicinity is searched.
- If route guidance is active, Along the route is searched.

- When the search results are displayed, select Filter.
- Select the search position, e.g. In the vicinity.
- If a route with intermediate destinations already exists and Near destination has been selected in the search filters, the destination is selected for the search.

or

- Select the desired travelling time to the point of interest.
- Select Search results.

CONFIGURING CATEGORIES FOR QUICK-ACCESS

THE CATEGORIES ARE DISPLAYED:

- As symbols after calling up the destination entry via [ ]
- As a list after calling up All categories

- In the POI menu, select All categories.
- Select [☆] or [★] for a category.
  Tapping on [☆] adds the category.
  Tapping on [★] removes the category.
- Use [↩] to change back.
  The new categories are shown after the destination entry is called up the next time.

ⓘ If all available quick-access positions are full, select the category to be replaced.

CHANGING THE ORDER OF QUICK-ACCESS CATEGORIES

- In the POI menu, press and hold a category for quick access.
- Tap on the arrows next to the selected category.
  The arrows for the other categories are greyed out.
- Drag the category up or down.
- Select [✓].

DELETING QUICK-ACCESS CATEGORIES

- In the POI menu, press and hold a category for quick access.
- Select [★] for the chosen category.
- Select Delete.
- Select [✓].

CHANGING CATEGORIES FOR PERSONAL POIS

- Select Personal POIs.
- Press on a category as long as is necessary until a menu appears.
- Select Change name and enter a name.
- Select Change icon and select a symbol.
- Select Delete and confirm the prompt with Yes.

SELECTING A CONTACT FOR DESTINATION ENTRY

Requirements:

- A mobile phone is connected to the multimedia system (→ page 556).
- The contacts from the mobile phone have been downloaded .
- The contact has a navigable address.

- The address data can be located on the digital map.

Multimedia system:

Navigation

- Enter a contact in the entry line.
- Select the address.
  The following menu enables the route to be calculated.

> Alternatively, after calling up the destination entry, you can enter the name of a contact in the search field.

ENTERING GEO-COORDINATES

Multimedia system:

Navigation

- Enter the geo-coordinates as latitude and longitude.

EXAMPLES OF INPUT FORMATS:

- 47°58'11"N 7°57'25"E (degrees, minutes and seconds)
- 47.969722 7.956944 (decimal degrees)

- Confirm the entry.
  The following menu enables the route to be calculated.

SELECTING A DESTINATION ON THE MAP

Multimedia system:

Navigation

- If necessary, move the map (→ page 546).
- Press and hold on the map.
  Available destinations are displayed.

or

- Briefly press on a POI symbol.
  The POI is selected. If there are several POIs at this map position, a list appears.
- Select the destination in the Selected objects list.
  The following menu enables the route to be calculated.

SELECTING A DESTINATION FROM FAVOURITES

Requirements:

- Destinations are saved as favourites.
  Save a previous destination or a destination suggestion as a favourite (→ page 539).

Multimedia system:

Navigation

- Select Favourites.
- Select a favourite.
  The route is calculated in the following menu.

ADDRESSES FOR HOME AND WORK ARE ALREADY SET

- Select Home or Work.
  The following menu enables the route to be calculated.

ADDRESSES FOR HOME AND WORK ARE NOT YET SET

- Select Home or Work.

  The prompt No "Home" address available. Set address now? appears, for example.

- Select Yes.

- Search for or select the address.

- Select Save.

DELETING FAVOURITES

- Select [•••] for a favourite.
- Select Delete.

or

- Select Delete all.

- Confirm the prompt.

  When all the favourites have been deleted, Add favourite is available, for example.

SELECTING RECEIVED DESTINATIONS

Requirements:

- To receive external destinations there must be an internet connection.
- Destinations have been sent to the vehicle.
- Destinations have been shared in the vehicle from another seat.

Multimedia system:

[⌂] ▶▶ Navigation ▶▶ [🔍]

The vehicle can receive destinations from services or apps. You will be notified when a destination is received.

- Select Received destinations.

- Select a destination.

  The route is calculated in the following menu.

ⓘ You can save a received destination as a favourite (⟶ page 539).

DELETING RECEIVED DESTINATIONS

- Delete a destination with [🗑].

or

- Select Delete all.

Route

CALCULATING A ROUTE

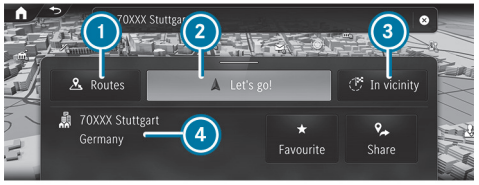

Example: detailed display

1. Calls up alternative routes
2. Calculates the route and starts route guidance
3. Selects a point of interest in the vicinity of the destination
4. Destination address
   The detailed display can contain additional entries, such as a three-word address from what3words, online content

The route is calculated once the destination has been selected.

- Select one of the options.

CALLING UP ALTERNATIVE ROUTES

- Select Routes.
- Select an alternative route (→ page 532).

STARTING ROUTE GUIDANCE

- Select Let's go!.

CALLING UP THE DETAILED DISPLAY WITH DESTINATION ADDRESS

- Pull the bar above 2 upwards.
  Depending on the destination selection and availability, online content, for example ratings and weather information, is shown.
  If the destination is in a different time zone, a message is displayed.
- **To share a destination:** select Share.
  This option allows you to scan the displayed QR code.
- **To save a destination as a favourite:** select Favourite and then an option.
- **To call up an Internet address:** if a web address is available, select www.
- **To call the destination:** if a telephone number is available, select Call.

SEARCHING FOR POIS IN THE VICINITY OF THE DESTINATION SHOWN

- Select In the vicinity.
- Search using categories, enter a search entry or search for a personal POI (→ page 521).

ADDING AN INTERMEDIATE DESTINATION TO THE EXISTING ROUTE OR STARTING A NEW ROUTE GUIDANCE

- Select Add .
  The selected destination address is set as the next intermediate destination. Route guidance begins.
- **There are already four intermediate destinations:** confirm the prompt with Yes and select an intermediate destination in the route overview (→ page 530), that should be overwritten with the new intermediate destination.

or

► Select [🏁] Replace.

The selected destination address is set as a new destination. Route guidance begins.

ⓘ **IF YOU CALL UP THE MENU DURING ROUTE GUIDANCE, MORE OPTIONS ARE AVAILABLE:**

- To change the order of destinations, select Move (⟶ page 531).
- To delete the destination, select Delete (⟶ page 531).
- To cancel route guidance, select Cancel route guidance.

SELECTING A ROUTE TYPE

Multimedia system:

[⌂] ▶▶ Navigation ▶▶ [⚙] ▶▶ Route

USING TRAILER MODE AND ONLINE ROUTES

The route is calculated as a fast route with a short journey time.

Trailer mode is available if a trailer has been coupled with the vehicle. If available, you can select online routes.

ⓘ Trailer mode and online routes are not available in all countries and for all vehicles.

► Select Trailer mode.

A prompt is shown in the multimedia system.

► Confirm the prompt.

The arrival time at the destination takes into account a reduced driving speed with trailer.

► **To use online routes:** switch on the option.

TAKING TRAFFIC INFORMATION FOR THE ROUTE INTO ACCOUNT

► Select Dynamic route guidance [>].

► Select one of the options.

EXPLANATION OF THE OPTIONS:

- Automatic

  Traffic reports via Live Traffic Information are taken into account (⟶ page 540).

  Live Traffic Information and FM home screen are not available in all countries.
- After asking

  A prompt appears when a new route is detected with a shorter journey time based on traffic reports. You can continue to use the current route or use the dynamic route instead (⟶ page 544).
- Off

  No traffic reports are taken into account for the route.

NAVIGATION FOR TRAILERS AND OVERSIZED VEHICLES

Requirements

- The destination has been entered.
- The destination address is shown.
- The Mercedes-Benz App is installed on an external device such as a tablet or smartphone.
- **For Navigation for Trailers and Oversized Vehicles:**
  - Digital Extras from Mercedes-Benz are available.
  - You have a user account for Digital Extras and the vehicle is connected with the user account.

- The Digital Extra "Navigation for Trailers and Oversized Vehicles" is available and activated in the Mercedes-Benz Portal.
- The Navi. Oversized Vehicles route option is activated on the MBUX multimedia system.

Navigation for trailers and oversized vehicles calculates an optimised route, e.g. based on the dimensions of the vehicle/trailer combination and the permissible gross mass. This means that obstacles such as low tunnels, bridges or narrow roads can be avoided. Similarly, routes that cannot be passed due to clearance height restrictions, tight bends, carriageway width and other parameters are avoided. The route is calculated in the Mercedes-Benz App and then sent to the MBUX multimedia system.

Activating the Digital Extra "Navigation for Trailers and Oversized Vehicles"

- Open the Mercedes-Benz App on your smartphone.
- Tap on ☰ at the top left and select the vehicle.
  The Garage menu appears.
- Select Service management.
- Select Navigation.
- Activate Navigation for Trailers and Oversized Vehicles.

ACTIVATING THE ROUTE FOR TRAILERS AND OVERSIZED VEHICLES ON THE MBUX MULTIMEDIA SYSTEM

- Select Navigation.
- Select ⚙.
- Select Route.
- Switch on Navi. Oversized Vehicles.

CALCULATING THE OPTIMIZED ROUTE AND SENDING THE ADDRESS TO THE VEHICLE

- Tap on the ➚ current vehicle position at the bottom right in the Mercedes-Benz App.
- Enter the destination. For example, you can enter the destination as an address or select from categories such as P.
- Switch on the Navigation with oversized vehicles option.
- Select Send address to vehicle.
- Select the route on the MBUX multimedia system.

MAKING PARAMETER SETTINGS FOR THE VEHICLE

- Tap on the ➚ current vehicle position at the bottom right.
- Select ⚙.
- Select the Trailers and oversized vehicles option.
  The Vehicle parameters page is shown.
- Select Important notes.
  The notes are shown.

FOLLOWING NOTES:

- Observe the local conditions as well as traffic regulations, traffic rules and traffic signs.
- The route is calculated on the basis of the information stored for the vehicle and trailer in the Mercedes-Benz "Navigation for Trailers and Oversized Vehicles" section.

- Please note that any parameter settings you make will affect the route calculation.
- A permanent Internet connection is required for this function.
- If the transmission of the vehicle position is deactivated during the journey or no permanent Internet connection is available, the route will not be updated.

▶ Close the page with [X].

▶ If necessary, change the vehicle parameters.

▶ Select Save.

The vehicle parameters are saved.

MAKING PARAMETER SETTINGS FOR THE TRAILER

▶ On the Vehicle parameters page, switch on the Trailer coupled option.

▶ Select the Trailer characteristics option.

▶ Select the size of the trailer.

▶ Change the trailer parameters.

▶ Select Save.

The trailer parameters are saved.

▶ If necessary, change the speed limit for the trailer and select Save.

ⓘ Alternatively, the trailer parameters can also be discarded with Reset characteristics.

CALCULATING ALTERNATIVE ROUTES

Multimedia system:

[⌂] ▶▶ Navigation ▶▶ [⚙] ▶▶ View

▶ Activate Overview of route after start.

Alternative routes are calculated for every route.

SELECTING ROUTE OPTIONS

Multimedia system:

[⌂] ▶▶ Navigation ▶▶ [⚙] ▶▶ Route ▶▶ Avoid options

AVOIDING OR USING ROUTE SECTIONS, E.G. MOTORWAYS OR FERRIES

▶ Activate or deactivate the avoid option.

Avoid: the option is activated. The route avoids motorways, for example.

Use: the option is deactivated. The route takes motorways into consideration, for example.

ⓘ The selected route options cannot always be taken into account. Therefore, a route may include a ferry, for instance, even though the Avoid ferries avoid option is enabled. A message appears and you will hear a corresponding message.

AVOIDING OR USING TOLL ROADS

The use of toll roads requires a usage fee (toll).

▶ Select Toll roads [>].

▶ Activate or deactivate Avoid all.

If the option is activated, the route avoids toll roads.

If the option is deactivated, the route takes toll roads into account.

or

- Select an option for Payment by cash or card or Electronic billing.

  Avoid: the route avoids toll roads with the selected method of payment.

  Use: the route takes into account roads that require a toll corresponding with the payment type selected.

AVOIDING OR USING ROADS REQUIRING A SPECIAL TOLL STICKER

A vignette allows for the use of a route network for a limited time period.

- Select Avoid vignette roads [>].
- Activate or deactivate Avoid all.

or

- Switch individual countries on or off in the list.

  Avoid: the option is activated. The route avoids roads requiring a special toll sticker in the selected countries.

  Use: the option is deactivated. The route takes into account roads in the selected country which require you to pay a time-based fee (vignette).

ⓘ These route options are not available in every country.

AVOIDING OR USING AREAS WITH LOW EMISSION ZONES

ⓘ The function is available when there is an active internet connection.

- Activate or deactivate Area with low emission zones.

  Avoid: the option is activated. The route avoids all low emission zones restricted for the vehicle. These are displayed in red on the map.

  Use: the option is deactivated. The restricted low emission zones for the vehicle are passed through on the route. A warning is displayed before you drive into a low emission zone.

AVOIDING AREAS

- Select Avoid areas [>] (→ page 547).

SELECTING NOTIFICATIONS FOR THE ROUTE

Requirements:

- **For an audible indication when approaching a personal POI:** the USB device contains personal POIs.
- The USB device is connected with the multimedia system.
- The category in which the personal POI belongs is activated.

Multimedia system:

[⌂] ▶▶ Navigation ▶▶ [⚙] ▶▶ Messages & tones

SWITCHING NAVIGATION ANNOUNCEMENTS ON OR OFF

- Activate Reduced messages.

  If a driving instruction is available for a simple change in direction, you hear a brief announcement, e.g. "turn right in 200 m". The number of driving instructions along the route is minimised.

- Activate Detailed messages.

  If a driving instruction is available and there is a complex driving situation, you hear supplementary information, e.g. "In 200 m turn right and continue to follow the major road". Additional driving instructions are issued for the route, for example on turning major roads.
- Activate Announce street names.

  The name of the street into which the vehicle should turn is announced.

ⓘ This option is not available in all countries and languages.

SWITCHING TRAFFIC ANNOUNCEMENTS ON OR OFF

► Activate or deactivate Announce traffic warnings.

If available, traffic warnings are announced, e.g. before the end of traffic jams that pose a risk.

AUDIBLE INDICATION WHEN APPROACHING A PERSONAL POI

► Select Personal POIs.

► Activate a category.

When approaching a personal POI in the selected category an audible indication will be issued.

DISPLAYING THE ROUTE OVERVIEW

Requirements

- A destination is entered.

Multimedia system:

Example: route guidance is active

1. To enter an address or POI
2. Destination and time of arrival

   Beneath this, the current distance to the destination and the chequered flag
3. Alternative routes
4. To search for parking
5. To switch the traffic information display on or off
6. To make settings for View, Messages & tones and Route

When route guidance is active, the destination and entered intermediate destinations are shown.

DEPENDING ON THE ROUTE, TRAFFIC SITUATION AND AVAILABLE DATA, FURTHER INFORMATION IS DISPLAYED:

- Name, destination address
- Symbols for intermediate destination and destination
- Phone number (if available)
- Web address (if available)
- Traffic information

The route can include up to four intermediate destinations.

► Select one of the options.

PLANNING ROUTES

Multimedia system:

► Navigation

► Enter the intermediate destination (→ page 50).

After entering the destination and new calculation of the route, the route overview is shown again. The route contains a new intermediate destination.

ⓘ If there are already four intermediate destinations, delete an intermediate destination (→ page 531).

EDITING A ROUTE WITH INTERMEDIATE DESTINATIONS

Requirements:

- The destination and at least one intermediate destination have been entered.

Multimedia system:

→ [⌂] ▶▶ Navigation

CHANGING THE ORDER OF THE DESTINATIONS

▶ In the route overview, press and hold on a destination.

▶ Move the destination with [◀] or [▶].

▶ Tap on [✓].
The editing mode is ended.

DELETING A DESTINATION

▶ In the route overview, press and hold on a destination.

▶ Tap on [🗑].
The editing mode is ended.

DISPLAYING THE ROUTE LIST

Multimedia system:

→ [⌂] ▶▶ Navigation

▶ Tap on navigation window ⑦ on the digital map (→ page 518).

Example: route list

① Upcoming manoeuvre with turning arrow, distance to manoeuvre, street number, street name

[🔇] Switches on navigation announcements

[🔊] Switches off navigation announcements

Including the following route sections on the route to the destination

② Current vehicle position

The route sections are displayed in the navigation window. The route list is updated during the journey.

ⓘ Motorway information shows the available service facilities. After selecting symbols, e.g. for car parks, service areas or motorway exits, the POI is adopted as an intermediate destination or destination.

▶ Swipe up or down.

▶ Select a route section.
The map section is displayed.

▶ **To return to vehicle position:** select Current position.

SELECTING AN ALTERNATIVE ROUTE

Requirements:

- A route has been created.
- The Overview of route after start option is switched on (⟶ page 528).

Multimedia system:

Navigation ▶▶ Other routes

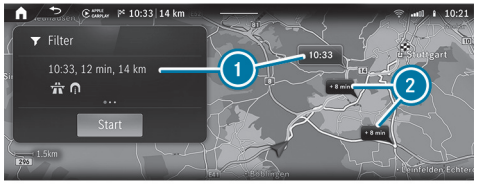

Example: alternative routes

1. Original route is highlighted
2. Alternative routes with indication of the difference in driving time

> ⓘ In 2 a faster route may also be shown that is considerably longer.

THE FOLLOWING ROUTE INFORMATION IS DISPLAYED:

- Driving time
- Time of arrival
- Distance to the destination
- Avoid options based on the set route options
- Driving time saved or lost compared with the original route

▶ When the alternative routes have been calculated, display the route in the navigation window by swiping to the right or left.

CHANGING ROUTE TYPE

▶ Select Filter.

▶ Switching the route type on or off.

AVOIDING OR USING ROUTE OPTIONS

▶ Select Filter.

▶ Switch the route options on or off (⟶ page 528).

▶ Confirm the settings with Finished.

▶ **To start route guidance to the alternative route:** select Start.

▶ **To select an alternative route on the map:** touch any point on the alternative route.

The alternative route is highlighted.

ACTIVATING A COMMUTER ROUTE

Requirements:

- You have created a profile (⟶ page 493).
- The Allow destination suggestions option is switched on (⟶ page 510).
- The Commuter route option is switched on.
- The multimedia system has gathered sufficient data in order to show destination suggestions.
- Routes have been learned for these destination suggestions.
- Route guidance is not active.

ⓘ This commuter route is not available in all countries.

Multimedia system:

[⌂] ▶▶ Navigation ▶▶ [⚙] ▶▶ Route

- Activate Commuter route.

  The navigation system automatically detects that the vehicle is on a commuter route.

  For the daily commuter route, traffic incidents on the route are also reported when driving without active route guidance.
- **To select commuter route:** select Start.

  Route guidance begins without spoken driving instructions.

ⓘ A commuter route is suggested even with delays on the route.

- **To delete a commuter route:** select [×].

SWITCHING THE AUTOMATIC FILLING STATION SEARCH ON OR OFF

Multimedia system:

[⌂] ▶▶ Settings ▶▶ Vehicle

- Select Driving.
- Activate or deactivate Automatic filling station search.

  If Automatic filling station search is switched on, a notification appears in which the search for filling stations is started.

STARTING AN AUTOMATIC FILLING STATION SEARCH

Requirements:

- The automatic filling station search is activated (⟶ page 533) .

DRIVING SITUATION

The fuel level in the fuel tank reaches the reserve fuel level.

The following notification is shown in the media display: Tap here to search for filling stations.

- Confirm the notification.

  The automatic filling station search begins. The available filling stations along the route or in the vicinity of the vehicle's current position are displayed.

or

- Hide the notification via [⊗].
- Select a filling station.

  The address of the filling station is displayed.
- Calculate the route (⟶ page 525).

  The filling station is set as the destination or the next intermediate destination.
- **If there are already four intermediate destinations:** select Yes in the prompt.

  The filling station is entered in the route overview. Intermediate destination 4 is deleted. Route guidance begins.

STARTING THE AUTOMATIC SERVICE STATION SEARCH

Requirements:

- ATTENTION ASSIST is activated (⟶ page 422).
- You are driving on a motorway.
- There are service stations along the route section ahead.

DRIVING SITUATION

- Confirm the notification.
  The service station search starts. The available service stations along the route or in the vicinity of the vehicle's current position are displayed.
- Select a service station.
- Calculate the route with the service station as an intermediate destination or as a destination (→ page 525).
- **If there are already four intermediate destinations:** select Yes in the prompt.
  The selected service station is entered in the route overview at position 1. Intermediate destination 4 is deleted. Route guidance begins.

STARTING AND EDITING A STORED ROUTE

Requirements:

- A USB device with stored routes is connected with the multimedia system (→ page 584).
- The route is stored in the "Routes" folder with the GPS Exchange format (.gpx).

Multimedia system:

→ Navigation

- Press the double arrow in the destination input line until Stored routes is displayed.
- Select Stored routes.

STARTING A SAVED ROUTE

- Select a route.
- Select Start: route guidance at start or Start: current location.
  Route guidance begins.

RENAMING A ROUTE

- Press on a route until a menu is shown.
- Select Rename.
- Enter the name.
- Select OK.

RECORDING AND STORING A ROUTE

Requirements:

- A USB device is connected with the multimedia system (→ page 584).

Multimedia system:

→ Navigation

- Press the double arrow in the destination input line until Stored routes is displayed.
- Select Stored routes.

STARTING RECORDING

- Select Start recording.
  A white rectangle is displayed.
  The route is stored on the USB device.

STOPPING RECORDING

- Press the white rectangle.
- Select End recording.

Route guidance

NOTES ON ROUTE GUIDANCE

> ⚠ **WARNING**
> Risk of distraction from operating integrated communication equipment while the vehicle is in motion
>
> If you operate communication equipment integrated in the vehicle when driving, you could be distracted from the traffic situation. This could also cause you to lose control of the vehicle.
>
> ► Only operate this equipment when the traffic situation permits.
>
> ► If you cannot be sure of this, stop the vehicle whilst paying attention to road and traffic conditions and operate the equipment with the vehicle stationary.

You must observe the legal requirements for the country in which you are currently driving when operating the multimedia system.
Route guidance begins once a route has been calculated. The road and traffic rules and regulations always have priority over multimedia system driving instructions. Driving instructions are, for example navigation announcements, changes in direction and lane recommendations.

Changes in direction and lane recommendations are shown in the navigation window.

THE FOLLOWING DISPLAYS AND FUNCTIONS ARE ALSO AVAILABLE IN THE NAVIGATION WINDOW, FOR EXAMPLE:

- Route list
- Destination information
- Traffic information, e.g. length of traffic jam, delay
- Motorway facilities
- Car park search
- Emergency corridors

If you do not follow the driving instructions or if you leave the calculated route, a new route is calculated automatically.

If, for example, the route is diverted or the direction of a one-way road has been reversed, driving instructions may deviate from the actual traffic situation.

Alternatives may be offered during route guidance, e.g. before passing a motorway exit road. The additional driving time for the journey along the motorway exit is shown.

For this reason, you must always observe road and traffic rules and regulations during your journey as well as the prevailing traffic conditions.

The route can differ from the ideal route, for example in the event of roadworks or incomplete digital map data.

NOTES ON SATELLITE RECEPTION
The correct function of the navigation system depends amongst other things on reception of the satellite system used. In certain situations satellite reception can be impaired, malfunction or even not be possible, e.g. in tunnels or in multi-storey car parks.

CHANGING DIRECTION OVERVIEW

CHANGES OF DIRECTION ARE SHOWN IN THE FOLLOWING DISPLAYS:

- Detailed image of the junction
  The display appears when you drive into a junction.
- 3D image

The display appears when driving on junction-free, multi-lane roads, for example on motorway exits and motorway interchanges.

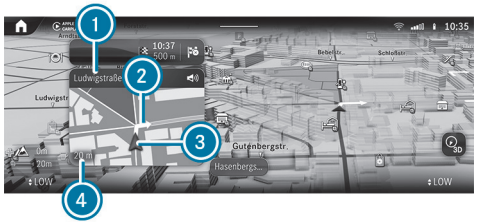

Example: detailed image of the crossing with upcoming changes of direction

1. Name of the street to turn into
2. Change of direction arrow (also on the map)
3. Current vehicle position
4. Current distance to the change of direction

Example: 3D image of the upcoming change of direction

1. Manoeuvre point
2. Change of direction arrow (also on the map)

   Larger map scales show change of direction points instead of change of direction arrows.
3. Current distance to the change of direction
4. Current vehicle position

THERE ARE THREE PHASES WHEN CHANGING DIRECTION:

- Preparation phase

  If there is enough time between the changes of direction, the multimedia system prepares you for the upcoming change of direction. A navigation announcement is issued, e.g. "Prepare to turn right".

  The navigation window shows: the direction information or the name of the road which is to be turned into as well as the distance to the change of direction.
- Announcement phase

  The multimedia system announces the upcoming change of direction, e.g. by announcing "Turn right in 300 m".

  When the Auto zoom map orientation is switched off (→ page 550), a detailed representation of the junction or a 3D image of the upcoming change in direction appears in the navigation window.
- Change-of-direction phase

  The multimedia system announces the imminent change of direction, e.g. by announcing "Now turn right".

  Example of 3D image: when the distance to manoeuvre point 1 is shown with 0 m and the symbol for current vehicle position 4 has reached manoeuvre point 1 the change in direction is carried out.

ⓘ Changes of direction are also shown in the instrument cluster.

LANE RECOMMENDATIONS OVERVIEW

Example: lane recommendations

1. Lane not recommended (grey arrow)
2. Possible lane (white arrow)
3. Recommended lane (white arrow, blue background)

This display appears for multi-lane roads.

If the digital map contains the relevant data, lane recommendations are displayed in the navigation window.

EXPLANATION OF THE DISPLAYED LANES:

- Recommended lane
  In this lane, you will be able to complete both the next change of direction and the one after that.
- Possible lane
  In this lane, you will only be able to complete the next change of direction.
- Lane not recommended
  In this lane, you will not be able to complete the next change of direction without changing lane.

New lanes may be added during the change of direction. Bus lanes are also shown.

ⓘ Driving recommendations are also shown in the instrument cluster.

USING MOTORWAY INFORMATION

When driving on the motorway, upcoming motorway facilities and available service facilities are shown in the route list. These include car parks, service stations or motorway exits with service POIs, for example.

The entries are sorted according to increasing distance from the current vehicle position.

- ► Select an entry.
- ► If several service facilities are available, select a service facility from the list.
  The destination address and the map position are shown.
- ► Calculate the route (⟶ page 525).

or

- ► Search for a POI in the vicinity.

or

- ► Use other functions, e.g. save the destination address of the service facility.

DESTINATION REACHED

Once the destination is reached, you will see the 🏁 chequered flag. Route guidance is finished. The navigation menu is shown.

When an intermediate destination has been reached, you will see the intermediate destination flag with the number of your intermediate destination. Route guidance is continued.

SWITCHING NAVIGATION ANNOUNCEMENTS ON OR OFF

DEACTIVATING

- During a navigation announcement, press the button on the steering wheel or controller in the centre console.

  The Spoken driving recommendations have been deactivated. message appears.

or

- In the route list for a driving manoeuvre select (→ page 531).

  The symbol changes to .

ACTIVATING

- Press the button on the steering wheel or on the controller in the centre console again.

or

- In the navigation window, select for an upcoming driving manoeuvre.

  The current navigation announcement is played.

  The symbol changes to .

SWITCHING NAVIGATION ANNOUNCEMENTS ON OR OFF DURING A PHONE CALL

- Press the button on the steering wheel on the right.

or

- Tap on in the media display.
- Select Settings.
- Select System.
- Select Audio.
- Select Navigation & traffic announcements.
- Activate or deactivate Driving recommendations during call.
- **To leave the menu:** select .

ADJUSTING THE VOLUME OF NAVIGATION ANNOUNCEMENTS

Multimedia system:

→ » Settings » System » Audio » Navigation & traffic announcements

- Select Driving recommendation vol..
- Set the volume.
- **To leave the menu:** select .

ROUTE GUIDANCE IS ACTIVE

- During a navigation announcement, adjust the volume on the steering wheel or the volume rocker switch on the operating strip (→ page 489).

SWITCHING AUDIO FADEOUT ON OR OFF DURING NAVIGATION ANNOUNCEMENTS

- Press the button on the steering wheel on the right.

or

- Tap on in the media display.
- Select Settings.
- Select System.
- Select Audio.
- Select Navigation & traffic announcements.

- Activate or deactivate Audio fadeout during navigation announcements.
- **To leave the menu:** select [↩].

REPEATING NAVIGATION ANNOUNCEMENTS

Requirements:

- A route has been created.
- Route guidance is active.

Multimedia system:

[⌂] ▶▶ Navigation

- In the navigation window, select [🔊] for an upcoming driving manoeuvre.
- Select [🔇].
  The current navigation announcement is repeated.

CANCELLING ROUTE GUIDANCE

Requirements:

- A route has been created.
- Route guidance is active.

- Show the navigation menu.
- Select [🏁] in the navigation menu (→ page 518).

OVERVIEW OF OFF-ROAD STATUS DURING ROUTE GUIDANCE

Due to roadworks, for example, there may be differences between the data on the digital map and the actual course of the road. In such cases, the multimedia system will temporarily be unable to locate the vehicle's current position on the digital map. The vehicle is off-road. Road not mapped will be shown. Route guidance may be restricted.

When the vehicle is back on a road known to the multimedia system, route guidance continues as normal.

Destination

SAVING THE CURRENT VEHICLE POSITION

Multimedia system:

[⌂] ▶▶ Navigation

- When the map is shown, tap on the [▲] current vehicle position.
- Select Store position.
- **To save as a favourite:** select Save as favourite.
- **To save as "Home" address:** select Home.
- **To save as "Work" address:** select Work.

EDITING THE PREVIOUS DESTINATIONS

Multimedia system:

[⌂] ▶▶ Navigation ▶▶ [🔍]

- Select Previous destinations.
- Select [•••] for the last destination.

SAVING THE LAST DESTINATION AS A FAVOURITE

- Press and hold on one of the previous destinations.
  A menu appears.
- **To save as a favourite:** select Save as favourite.

- **To save as "Home" address:** select Home.
- **To save as "Work" address:** select Work.

DELETING A PREVIOUS DESTINATION

- Select Previous destinations.
- Select [•••] for the last destination.
- Select Delete.

or

- Select Delete all.
- Confirm the prompt.
  When all the favourites have been deleted, Add favourite is available, for example.

EDITING DESTINATION SUGGESTIONS

Requirements:

- The Allow destination suggestions option is switched on (⟶ page 510).
- To display destination suggestions: the multimedia system has collected sufficient data.

Multimedia system:

[⌂] ▶▶ Navigation ▶▶ [🔍]

- Select Suggestions.
- Press and hold a destination suggestion.
  A menu appears.
- **To end destination suggestions:** select Do not suggest now or No longer suggest.
- **To save a destination suggestion:** select Save as favourite, Home or Work.

ⓘ Deleting a destination suggestion in the favourites (⟶ page 523).

Route guidance with current traffic reports

TRAFFIC INFORMATION OVERVIEW

Current traffic reports are received with the Digital Extra (subscription) Live Traffic Information.

When the subscription has expired then in selected countries FM RDS-TMC is available.

ⓘ Live Traffic Information is not available in all countries.

Live Traffic Information registered in your Mercedes me ID (⟶ page 541). This secures the free-of-charge period of three years.

The Digital Extra updates the traffic situation at short, regular intervals via the internet connection.

Information on the vehicle's position is regularly sent to Mercedes-Benz AG. The data is immediately rendered anonymous by Mercedes-Benz AG and forwarded to the traffic data provider. Using this data, traffic reports relevant to the vehicle's position are sent to the vehicle. The vehicle acts as a sensor for the flow of traffic and helps to improve the quality of the traffic reports.

ⓘ There may be differences between the traffic reports received and the actual road and traffic conditions.

IF YOU DO NOT WISH TO TRANSMIT A VEHICLE POSITION, YOU HAVE THE FOLLOWING OPTION:

- You can deactivate the Digital Extra in your Mercedes me ID.
- You can have the Digital Extra deactivated at a Mercedes-Benz service centre.

ⓘ Further hazard warnings are received via the Car-to-X Digital Extra (⟶ page 544).

DISPLAYING INFORMATION FOR LIVE TRAFFIC INFORMATION

Requirements:

- The vehicle is equipped with Live Traffic Information.

Multimedia system:

⟶ ⌂ ▶▶ Apps ▶▶ Mercedes me ▶▶ My Digital Extras

▶ Select Live Traffic.

When the subscription for Live Traffic Information expires then, in selected countries, FM RDS-TMC is available.

REGISTERING LIVE TRAFFIC INFORMATION

Requirements

- The vehicle is equipped with Live Traffic Information.
- You have a Mercedes me ID.

▶ Create a Mercedes me ID at: https://www.mercedes.me. A valid email address is required for this.

▶ Register the vehicle using the vehicle identification number (VIN).

▶ Link the vehicle to your Mercedes me ID.
A code is sent to the multimedia system.

▶ Enter the code into the multimedia system.

▶ Accept the general and specific terms of use.

ⓘ Alternatively, you can have the connection completed at a Mercedes-Benz service centre.

EXTENDING A LIVE TRAFFIC INFORMATION SUBSCRIPTION

Requirements

- The vehicle is equipped with Live Traffic Information.
- You have a Mercedes me ID.

▶ Call up the Mercedes-Benz website.

▶ Call up the Mercedes me ID.

▶ Switch to the Mercedes-Benz Store via the linked vehicle.

▶ Select Live Traffic Information.

▶ Select the renewal period.

- ▶ Add the product to the shopping basket.
- ▶ Accept the general and specific terms of use.
  Live Traffic Information remains activated for the selected extension period. Activation begins on the date of extension.

DISPLAYING TRAFFIC INFORMATION ON THE MAP

Requirements:

- Traffic incidents and Free-flowing traffic are switched on (⟶ page 543).

Multimedia system:

Navigation

- ▶ If necessary, move the map (⟶ page 546).

THE MAP SHOWS THE FOLLOWING TRAFFIC INFORMATION DEPENDING ON THE ACTIVATED SETTINGS:

- Traffic incidents
  These are roadworks, road blocks and warning messages, for example.
  When route guidance is active, the symbols for traffic incidents will be shown in colour on the route. Off the route they are grey.
- Warning messages
  Warning messages are shown as the ⚠ symbol.
  Traffic safety information can be shown, e.g. if there are people on the carriageway.
  If the vehicle approaches a danger area, for example the end of a traffic jam in a dangerous position, the ⚠ symbol is shown on the map. If Announce traffic warnings is switched on and a message has been issued, an additional announcement is made.
- Traffic flow information:
  - Traffic jam (red line)
  - Slow-moving traffic (orange line)
  - Heavy traffic (yellow line)
  - Free-flowing traffic (green line)
- Display for traffic delays on the current route
  The smallest value for the display for traffic delays is a minute.

SHOWING TRAFFIC INCIDENTS ON THE ROUTE

Requirements:

- The Traffic incidents display is switched on (⟶ page 543).

Multimedia system:

Navigation

If there are traffic incidents on the route, these are shown on the map and in the route overview.

> ⓘ With the MBUX Voice Assistant you can inform yourself about traffic incidents on your route. Ask, for example **How is the traffic on my route?** or **How is the traffic at home?**. A voice output is given.

Example: traffic incidents on the route

1. Total delay or message that there are no delays along the route

2 Switches traffic information display on or off
3 Calls up settings for View, Messages & tones and Route

IF THERE ARE ANY DELAYS ALONG THE ROUTE, THESE ARE SHOWN IN THE ROUTE OVERVIEW TOGETHER WITH THE FOLLOWING INFORMATION:

- Traffic jam: red bar
- Slow-moving traffic: orange bar
- Heavy traffic: yellow bar
- For each section:
  - The delay
  - The length
  - The street name or the street number

DURING ACTIVE ROUTE GUIDANCE, THE TOTAL DELAY ON THE ROUTE IS ALSO DISPLAYED HERE:

- in the navigation system in the navigation module
- in other applications in the status line at the top

Traffic incident symbols are shown in the route overview and in the map. A traffic incident symbol is, for example for roadworks.
In the map several traffic incidents may be shown on top of each other. The traffic incident symbol shows a plus sign.
If available, the street number can be replaced by a street name or both the name and number.

If a message about forming an emergency corridor has been issued, Emergency corridor is shown in the navigation window.

► To see all of the traffic incidents on the route, swipe to the right or left.
The route section is highlighted on the map.

► **To show detailed information in the route overview:** tap on a display in the route overview.
The detailed information is shown, for example the road section and the direction.

CALLING UP DETAILED INFORMATION ON THE MAP

► Tap on traffic flow information on the map, e.g. a red line for a traffic jam section.
The detail information is displayed.

► If several lines are shown on top of the other, then select an item of traffic flow information from the list.

SHOWING TRAFFIC INCIDENTS ON THE MAP

► Tap on a traffic incident symbol.
The detail information is displayed.

► **Several traffic incidents are in the immediate vicinity:** tap on the top traffic incident symbol and select from the list of traffic incidents.

SWITCHING THE TRAFFIC INFORMATION DISPLAY ON

Multimedia system:

→ ▶▶ Navigation ▶▶

► Select View.

► Activate Traffic.

► Activate Traffic incidents and Free-flowing traffic.

Traffic incidents, for example roadworks, local area reports (e.g. fog) and warning messages, are shown on the route.

ACCEPTING A DETOUR RECOMMENDATION AFTER A PROMPT

Requirements:

- After asking is switched on in the Dynamic route guidance menu (⟶ page 526).
- Route guidance is active.
- There are traffic reports for the current route.

If a new route with a shorter driving time is determined, the current and new routes will be shown.

If another application is active, a notification is hidden.

► Confirm the notification.

► **To accept the new route:** select Accept.

► **To maintain the current route:** select Keep to current route.

Car-to-X-Communication

OVERVIEW OF CAR-TO-X-COMMUNICATION

THE FOLLOWING REQUIREMENTS APPLY FOR THE DIGITAL EXTRA CAR-TO-X-COMMUNICATION:

- The vehicle is equipped with an MBUX multimedia system with navigation function.
- You have subscribed to the Digital Extra Live Traffic Information.
- The Digital Extra Car-to-X-Communication is activated in your Mercedes me ID.

ⓘ Car-to-X-Communication is available in selected countries.

The communication module automatically establishes an Internet connection once the vehicle is switched on. If there are any hazard warnings, they will be provided shortly thereafter. Depending on the mobile phone connection, provision takes place from within a second up to about a minute.

BENEFITS OF CAR-TO-X-COMMUNICATION:

- Hazards are automatically detected by the vehicle or can be reported by the driver. These are then sent to vehicles with Car-to-X-Communication in the immediate vicinity.
- If available, current details relating to hazard spots near the vehicle's current position are received.

  This gives you sufficient time to adapt your driving style to the traffic conditions.

The use of Car-to-X-Communication requires the regular transmission of vehicle data to Mercedes-Benz AG. The data is then immediately pseudonymised by Mercedes-Benz AG. The vehicle data is deleted after an appropriate amount of time has elapsed (several weeks) and is not stored permanently.

ⓘ Data which serves as identification is replaced during the pseudonymisation process. In this way, your identity is protected against access by unauthorised third parties.

DISPLAYING HAZARD WARNINGS

Multimedia system:

Navigation

If hazard warnings are available these can be shown as symbols on the map. The display depends on the settings for the Traffic incidents option.

- Set the option via (→ page 543).

  If the option is activated, all of the symbols are shown.

  If the option is deactivated, the symbols are only shown when there is a hazard warning.

THE FOLLOWING HAZARDS MAY BE SHOWN ON THE MAP:

- Accidents and breakdowns
- Slippery roads, fog, crosswinds and heavy rain
- Hazards reported manually
- Vehicle with active hazard warning light
- Roadworks
- Additional hazards (if available)

ⓘ If Announce traffic warnings is switched off (→ page 529), voice output can indicate a danger area.

SENDING HAZARD WARNINGS

REPORTING HAZARDS MANUALLY

ⓘ Automatically detected hazard warnings are sent by the vehicle.

- When the map is shown, tap on the current vehicle position.

  The Position menu is shown.

- Select Report traffic incident.

  The Thank you for supporting accident prevention! message appears.

Map and compass

SETTING THE MAP SCALE

Multimedia system:

Navigation

ZOOMING IN

- When the map is shown, tap twice quickly with one finger on the media display.

or

- Move two fingers apart on the media display.

ZOOMING OUT

- Tap with two fingers on the media display.

or

- Move two fingers together on the media display.

ⓘ You can set the unit of measurement of the map scale (→ page 509).

MOVING THE MAP

Multimedia system:

Navigation

- When the map is displayed, swipe in any direction with one finger on the media display.
- **To reset the map to the current vehicle position:** select Centre .

SWITCHING THE ROUTE OVERVIEW AFTER START ON OR OFF

Multimedia system:

Navigation

- Select View.
- Activate or deactivate Overview of route after start.

  If the option is enabled, the map shows the full route after route guidance is started and, if available, all alternative routes.

SELECTING POI SYMBOLS FOR THE MAP DISPLAY

Multimedia system:

Navigation

POIs include restaurants and hotels, for example. These are displayed as symbols on the map. Not all POIs are available in all countries.

Personal POIs are destinations which you have saved on a USB device, for example.

> ⓘ The display of POI symbols on the map can be activated or deactivated as a favourite.

- Select View.
- Select POI symbols on map .
- Activate Hide all points of interest.

  When the option is switched on, the POI symbols for all categories are shown on the map according to the settings in the POI categories.

> ⓘ If the conditions are fulfilled, the POI symbols are shown with current online information (⟶ page 551).

SWITCHING DISPLAY OF CATEGORIES FOR QUICK-ACCESS ON OR OFF

- Switch a category on or off in the menu.

SELECTING CATEGORIES

- In the menu, select Other categories .
- Activate or deactivate Show all.

  When the option is switched on, the POI symbols for all categories are shown on the map.

or

- Select the categories.
- Activate or deactivate the categories.

  The POI symbols for the selected categories are shown on the map.

SELECTING PERSONAL POI CATEGORIES

- In the menu, select Personal POIs .
- Select a category .
- Activate or deactivate Display on the map.
- **To issue a signal when approaching:** activate Visual warning and Acoustic notification.

RESETTING THE POI SYMBOL DISPLAY

- In the menu, select Reset POIs.

  The settings are reset to the standard settings.

SELECTING THE DISPLAY OF ADDITIONAL INFORMATION ON THE MAP

Multimedia system:

Navigation

- Select View.
- Select Show additional information.
- Switch the options on or off.

THE FOLLOWING OPTIONS ARE AVAILABLE:

- Current street

  If the option is enabled, it will be displayed in the navigation window.
- Scale

  If the option is switched off, the map scale is only displayed on the map when zooming.

  If the option is enabled, the map scale is permanently displayed on the map.

  The option also influences the display on the instrument cluster.
- Altitude
- Next junction

  If the option is switched on and the journey continues without route guidance, the name of the next intersecting street will be displayed in the navigation window.

DISPLAYING THE MAP VERSION

Multimedia system:

Navigation

- Select View.
- Select Map data version.

  The detail information is displayed.

> You can update the map data with the Online Map Update Digital Extra (⟶ page 49).

> Information about new versions of the digital map can be obtained from a Mercedes-Benz service centre.

OVERVIEW OF AREA AVOIDANCE ON THE ROUTE

You can define areas along a route that you would like to avoid.

Motorways or multi-lane expressways that pass through an area to be avoided may be included in the route despite being blocked.

AVOIDING A NEW AREA FOR THE ROUTE

Multimedia system:

Navigation Route Avoid areas

- Select Avoid new area.

STARTING USING THE MAP

- Select Using map.

  A red rectangle appears. This designates the area that should be avoided.

- Move the map (→ page 546).
- Set the map scale (→ page 545).
- Select OK.
  The area is entered into the list.

STARTING USING DESTINATION SEARCH

- Select Via address entry.
- Enter the address (→ page 50).
- Select the destination in the list.
  The map appears. The area is saved.

CHANGING AN AREA TO BE AVOIDED

Multimedia system:

Navigation ▶▶ Route ▶▶ Avoid areas

- Select an area in the list.
- Select Edit.

CHANGING THE SIZE OF THE AREA

- Select OK.
  The area is entered into the list.

TAKING THE AREA FOR THE ROUTE INTO ACCOUNT

- Select the area in the list.
- Activate Avoid area.
  If route guidance is active, a new route is calculated.
  If there is no route yet, the setting is carried over to the next route guidance.

THE ROUTE CAN INCLUDE AN AREA THAT IS TO BE AVOIDED IN THE FOLLOWING CASES:

- The destination is located in an area that is to be avoided.
- The route includes motorways or multi-lane expressways which pass through an area to be avoided.
- There is no practical alternative route.

DELETING AN AREA TO BE AVOIDED

Multimedia system:

Navigation ▶▶ Route ▶▶ Avoid areas

DELETING AN AREA TO BE AVOIDED

- Select an area in the list.
- Select Delete.
- Confirm the prompt with Yes.

DELETING ALL AREAS TO BE AVOIDED

- If at least two areas to be avoided are set, select Delete all.
- Confirm the prompt with Yes.

OVERVIEW OF UPDATING THE MAP DATA

As the content of a digital road map has a short life, outdated data may have a negative effect on all navigation functions. For the best MBUX navigation experience, you should install all of the map updates offered by Mercedes-Benz.

THE FOLLOWING OPTIONS ARE AVAILABLE FOR THE UPDATE OF MAP DATA:

- Online map update
- Updates via the Mercedes-Benz Portal
- Update at a Mercedes-Benz service centre

Additional costs can be incurred in this process.

ONLINE MAP UPDATE

REQUIREMENTS:

- Digital Extras are available.
- You have a Mercedes me ID.
- The vehicle is linked to your Mercedes me ID and you have accepted the terms of use for the Digital Extra.
  Further information can be found at: https://www.mercedes.me
- The Online Map Update is available for your region.
- The Online Map Update has been activated.

ⓘ The Online Map Update is only available in certain countries.

Installation takes place in the background as an automatic map update.

The MBUX multimedia system installs all of the available map updates for the regions in which the vehicle is located or is moved.

The online map update is activated at the latest after the next time the vehicle is switched on.

UPDATES VIA THE MERCEDES-BENZ PORTAL

The map data for several regions can also be updated manually. Log in with your Mercedes me ID at: https://www.mercedes-benz.de/

Follow the menu path My Mercedes me ID > My vehicles > Selection of car > Online Map Update. Select the regions to be downloaded to a storage medium.

After the map data has been copied, connect the storage medium with your vehicle. Select the notification with information about a new version of the map data and start the installation. After the MBUX multimedia system has been restarted, the updated map data is used.

OVERVIEW OF MAP DATA

If map data is reinstalled in a vehicle, no activation code needs to be entered.

For map data purchased as data storage media, the enclosed activation code must be entered after starting the installation.

Activation codes are only ever valid for one vehicle.

IN THE EVENT OF THE FOLLOWING PROBLEMS, PLEASE CONTACT A MERCEDES-BENZ SERVICE CENTRE:

- The multimedia system does not accept the activation code
- You have lost the activation code

DISPLAYING THE COMPASS

Multimedia system:

⟶ [⌂] ▶▶ Navigation

▶ When the map is shown, tap on the [▲] current vehicle position until the Position menu is shown.

▶ Select Compass.

THE COMPASS DISPLAY SHOWS THE FOLLOWING INFORMATION:

- the current direction of travel with bearing (360° format) and compass direction
- longitude and latitude coordinates in degrees, minutes and seconds
- Number of satellites from which a signal can be received

The information is not available in every country.

SETTING THE MAP SCALE AUTOMATICALLY

Multimedia system:

Navigation

- Select View.
- Activate Auto zoom.

  When the option is switched on, the map scale is set automatically depending on your driving speed and the type of road.

> The automatically selected map scale can be changed manually. After a few seconds, this is automatically reset.
> When the option is activated, no detailed display of the junction or a 3D image is shown in the navigation window during an upcoming driving manoeuvre.

DISPLAYING THE SATELLITE MAP

Multimedia system:

Navigation

- Select View.
- Activate or deactivate Satellite map.

  WHEN SATELLITE MAP IS SELECTED, THEY ARE DISPLAYED AT THE FOLLOWING MAP SCALES:

  - On-board maps

    The satellite maps are displayed in map scales from 2 km.
  - Online maps

    The satellite maps are displayed in high-resolution map scales from 10 m.

  When Satellite map is not selected, no satellite maps are displayed.

> The satellite maps for these map scales are not available in all countries.

DISPLAYING THE RANGE

Requirements

- There is an Internet connection.
- Digital Extras are available.
- You have a Mercedes me ID.
- The vehicle is linked to the Mercedes me ID and you have accepted the terms of use.

  Further information can be found at: https://www.mercedes.me
- The Digital Extra is available and has been activated.

Multimedia system:

Navigation

- Select View.
- Activate Range.

THE RANGE IS SHOWN ON THE MAP WITH THE FOLLOWING DISPLAYS:

- Vehicles with a petrol or diesel engine: the range is shown on the map with a green line around the current vehicle position.

When the lower reserve capacity is reached then the range display on the map is switched off.

> The range display on the map is not available in all countries.

DISPLAYING ONLINE MAP CONTENTS

Requirements

- There is an Internet connection.
- Digital Extras are available.
- You have a Mercedes me ID.
- The vehicle is linked to the Mercedes me ID and you have accepted the terms of use.

  Further information can be found at: https://www.mercedes.me
- The Digital Extra is available and has been activated.

Multimedia system:

Navigation

▶ Select View.

▶ Switch on an online service, e.g. Weather.

Current weather information is displayed on the navigation map, e.g. temperature or cloud cover.

The service information is not shown in all map scales, e.g. weather symbols.

ⓘ The display of online map content is not available in all countries.

Parking service

NOTES ON THE PARKING SERVICE

NOTE

Vehicle damage due to failure to observe the maximum permissible clearance height

If the vehicle height exceeds the maximum permissible clearance height, the roof and other vehicle parts may be damaged.

▶ Please observe the indicated maximum clearance height.

▶ If the vehicle exceeds the permissible clearance height, do not drive in.

▶ Take the modified vehicle height in the case of roof superstructures or other carrier systems into account.

ⓘ This service is not available in all countries.

SELECTING PARKING OPTIONS

NOTE
Vehicle damage due to failure to observe local information and parking conditions

The data is based on the information provided by the respective service providers.

Mercedes-Benz does not guarantee the accuracy of the information provided in relation to the car park or parking area.

► Always observe the local information and conditions.

Requirements:

- The "Navigation" service with the navigation services is activated in your Mercedes me ID.
- The scope of navigation services includes the Digital Extra "Parking for navigation".
- Parking is activated (⟶ page 553).

Multimedia system:

⟶ ⌂ ▶▶ Navigation

► Tap on P the map.

or

► In the route overview, select P Parking spaces (⟶ page 530).
► Select the search position and search filter, e.g. Near destination and Multi-storey car parks.

The map shows car parks suited to the selected settings.

► Select a parking option.

THE FOLLOWING INFORMATION IS DISPLAYED (IF AVAILABLE):

- Destination address, distance from current vehicle position and arrival time
- Information on the car park, e.g.
  - Opening times
  - Parking charges
  - Current occupancy
  - Maximum parking time
  - **Maximum access height**

    The maximum access height shown by the parking service does not replace the need for observation of the actual circumstances.
- Available payment options (Mercedes pay, coins, bank notes, cards)
- Details on parking tariffs
- Number of available parking spaces
- Payment method (e.g. at parking meters)
- Services/facilities at the parking option
- Telephone number

► Calculate the route (⟶ page 525).

THE FOLLOWING FUNCTIONS CAN BE USED (IF AVAILABLE):

- Searching for POIs in the vicinity.
- Saving the destination.
- Placing a call at the destination.
- Sharing the destination via the QR code.
- Calling up the web address.

- Showing the destination on the map.

DISPLAYING PARKING OPTIONS ON THE MAP

Requirements:

- The "Navigation" service with the navigation services is activated in your Mercedes me ID.
- The scope of navigation services includes the Digital Extra "Parking for navigation".

Multimedia system:

Navigation

► Activate Parking.

The parking options within the vicinity of the current vehicle position are shown.

Telephone

Telephony

TELEPHONE MENU OVERVIEW

1. Bluetooth® device name of the currently connected mobile phone/the mobile phones
2. Bluetooth® device name of the other currently connected mobile phone/of the mobile phone
3. Signal strength of the mobile phone network
4. Battery status of the connected mobile phone
5. Options
6. Messages
7. Calls up devices
8. Numerical pad
9. Starts contact search

BLUETOOTH® PROFILE OVERVIEW

Bluetooth® profile of the mobile phone	Function
PBAP (**P**hone **B**ook **A**ccess **P**rofile)	Contacts are automatically displayed in the multimedia system
MAP (**M**essage **A**ccess **P**rofile)	Message functions can be used
HFP (**H**ands **F**ree **P**rofile)	Wireless telephony is available

TELEPHONY OPERATING MODES OVERVIEW

DEPENDING ON THE EQUIPMENT, THE FOLLOWING TELEPHONE OPERATING MODES ARE AVAILABLE:

- One mobile phone is connected to the multimedia system via Bluetooth® (⟶ page 556).
- Two mobile phones are connected with the multimedia system via Bluetooth® (two phone mode) (⟶ page 556).
  - You can use all the functions of the multimedia system with both mobile phones.

ⓘ Irrespective of this, Bluetooth® audio functionality can by used with any mobile phone (⟶ page 585).

NOTES ON TELEPHONY

WARNING
Risk of distraction from operating integrated communication equipment while the vehicle is in motion

If you operate communication equipment integrated in the vehicle when driving, you could be distracted from the traffic situation. This could also cause you to lose control of the vehicle.

- Only operate this equipment when the traffic situation permits.
- If you cannot be sure of this, stop the vehicle whilst paying attention to road and traffic conditions and operate the equipment with the vehicle stationary.

WARNING
Risk of accident from operating mobile communication equipment while the vehicle is in motion

Mobile communication devices distract the driver from the traffic situation. This can also cause the driver to lose control of the vehicle.

- As a driver, only operate mobile communication devices when the vehicle is stationary.
- As a vehicle occupant, use mobile communication devices only in the designated area, e.g. in the rear passenger compartment.

When operating the multimedia system and mobile communication devices in the vehicle, observe the legal regulations of the country in which you are currently travelling.

WARNING
Risk of injury due to objects being stowed incorrectly

If objects in the vehicle interior are stowed incorrectly, they may slide or be thrown around and hit vehicle occupants. In addition, cup holders, open stowage spaces and mobile phone receptacles will not always be able to retain all objects that they contain in the event of an accident.

There is a risk of injury, particularly in the event of sudden braking or a sudden change in direction.

- Always stow objects such that they cannot be thrown around in such situations.
- Always make sure that objects do not protrude from stowage spaces, luggage nets or stowage nets.
- Close the lockable stowage spaces before starting a journey.
- Always stow and secure heavy, hard, pointed, sharp-edged, fragile or bulky objects in the boot/load compartment.

OBSERVE THE ADDITIONAL INFORMATION ON STOWING MOBILE COMMUNICATIONS DEVICES CORRECTLY:

- Loading the vehicle (→ page 593)
- Stowing and securing the mobile phone (→ page 247)

Further information can be obtained from a Mercedes-Benz service centre or at: https://www.mercedes-benz-mobile.com/

INFORMATION ON TELEPHONY

WHILE THE VEHICLE IS IN MOTION, THE FOLLOWING SITUATIONS, FOR EXAMPLE, CAN LEAD TO THE CALL BEING DISCONNECTED:

- there is insufficient network coverage in the area
- you move from one transmission/reception station to another and no communication channels are free
- the SIM card used is not compatible with the network available
- a mobile phone with "Twincard" is logged into the network with the second SIM card at the same time

The multimedia system supports calls in HD Voice® for improved speech quality. A requirement for this is that the mobile phone and the mobile phone network provider of the person you are calling support HD Voice®.

Depending on the quality of the connection, the voice quality may fluctuate.

CONNECTING A MOBILE PHONE

Requirements:

- Bluetooth® is activated on the mobile phone (see the manufacturer's Owner's Manual).
- Bluetooth® is activated on the multimedia system (⟶ page 507).

Multimedia system:

Phone ▶▶ ⚙ ▶▶ Devices ▶▶ Devices

SEARCHING FOR A MOBILE PHONE

▶ Select Connect new device.

AUTHORISING A MOBILE PHONE

▶ Select a mobile phone.
A code is displayed in the multimedia system and on the mobile phone.

▶ **If the codes match:** confirm the code on the mobile phone.

ⓘ For older mobile phone models, enter a 1 to 16-digit number code on the mobile phone and on the multimedia system for authorisation.

ⓘ Up to 15 mobile phones can be authorised on the multimedia system.
Authorised mobile phones are reconnected automatically.

ⓘ The connected mobile phone can also be used as a Bluetooth® audio device (⟶ page 585).

CONNECTING A SECOND MOBILE PHONE (TWO PHONE MODE)

Requirements:

- At least one mobile phone is already connected to the multimedia system via Bluetooth®.

Multimedia system:

Phone ▶▶ ⚙ ▶▶ Devices ▶▶ Devices

▶ Select Connect new device.

▶ Select the mobile phone.

- In some cases, if the query appears, confirm the selection of the mobile phone pair with the Device name 1 + Device name 2 option.

  The selected mobile phone is connected to the multimedia system.

INTERCHANGING MOBILE PHONES (TWO PHONE MODE)

Multimedia system:

Phone

Both mobile phones are shown individually in separate tabs.

- Select the tab with the desired mobile phone.

  Selecting the tab of a specific mobile phone displays the associated telephone contents.

  Selecting the other tab switches the view to the other telephone.

  The submenus in the telephone menu (e.g. contacts, call lists, messages) relate to the currently selected mobile phone with the exception of the telephone settings. In the telephone settings, settings can be made for both mobile phones.

CHANGING THE FUNCTION OF A MOBILE PHONE

Multimedia system:

Phone Devices Devices

ACTIVATING A FUNCTION

- Select a grey symbol in the line of a mobile phone.

  The corresponding function is activated.

DEACTIVATING A FUNCTION

- **A function is active:** in the line of a mobile phone, select the coloured symbol.

  The mobile phone is disconnected from the multimedia system.

- **Several functions are active:** de-select an active function in the line of one of the mobile phones.

  The corresponding function is deactivated.

REPLACING MOBILE PHONES

Multimedia system:

Phone Devices Devices

NO AUTHORISED MOBILE PHONE AVAILABLE:

- Select Connect new device.

- Select a mobile phone.
- **Newly authorised mobile phone:** confirm the number code on the mobile phone.

USING IN SINGLE TELEPHONE MODE

- Select Device name.

  A newly authorised mobile phone is connected in single telephone mode.

  If the mobile phone has already been authorised and connected in single telephone mode, it is connected again in single telephone mode.

  If a mobile phone is already authorised and has been connected in two phone mode with another mobile phone, a query may come, whether the mobile phone should in future be operated in single telephone mode or connected with another mobile phone in two phone mode.

- If required, confirm the query about operating mode (single telephone or two phone mode) by confirming the Device name option.

USING IN TWO PHONE MODE

- Select Device name 1 + Device name 2.

  A newly authorised mobile phone is connected with the selected mobile phone in two phone mode.

  If the mobile phone has already been authorised and connected in single telephone mode, it will be connected in future with the selected mobile phone in two phone mode.

  If the mobile phone was previously connected with another mobile phone, this connection is cancelled.

DISCONNECTING OR DELETING A MOBILE PHONE

Multimedia system:

Phone ▶▶ Devices

DISCONNECTING A MOBILE PHONE

▶ Select Disconnect.

If applicable, the mobile phone will be automatically reconnected when the vehicle is next started.

DELETING A MOBILE PHONE

▶ Select Devices.

▶ Select ••• in the line of the mobile phone.

▶ Select Delete device.

The mobile phone is deleted from the system.

USING THE MOBILE PHONE WITH NEAR-FIELD COMMUNICATION (NFC)

Requirements:

- NFC is activated on the mobile phone (see the manufacturer's operating instructions)
- The mobile phone's screen is switched on and unlocked (see the manufacturer's operating instructions)

CONNECTING A MOBILE PHONE

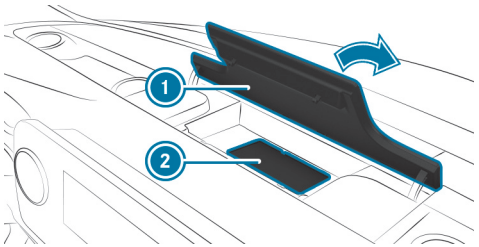

▶ Open the flap of storage compartment ① above the media display.

▶ Hold the NFC interface of the mobile phone (see the manufacturer's operating instructions) against mat ② or place the mobile phone on mat ② with the display facing upwards.

▶ Follow the additional prompts on the media system display to connect the mobile phone. Connect the mobile phone in single telephone mode (⟶ page 556). Connect the mobile phone in two phone mode (⟶ page 556).

REPLACING A MOBILE PHONE

▶ Hold the NFC interface of the mobile phone (see the manufacturer's operating instructions) against mat ① in the front storage compartment.

▶ Follow the additional prompts on the media system display to replace the mobile phone in one or two phone mode (⟶ page 557).

▶ If required, confirm the prompts on your mobile phone (see the manufacturer's operating instructions).

ⓘ If your mobile phone supports wireless charging, it can be charged on the mat (⟶ page 247).

ⓘ If the mobile phone is not charging, switch off NFC on the mobile phone (see the manufacturer's operating instructions).

Further information can be found at: https://www.mercedes-benz-mobile.com/

SETTING THE RECEPTION AND TRANSMISSION VOLUME

Requirements:

- A mobile phone is connected (→ page 556).

Multimedia system:

Phone ▶▶ Devices ▶▶ Devices

This function ensures optimal language quality.

> ⓘ Please note that the respective mobile phone must be selected for adjustment of the reception and transmission volume.

- ▶ Select [•••] in the line of the mobile phone.
- ▶ Select Volume.
- ▶ Set the reception and transmission volume using Reception volume and Transmission volume.

Further information on the recommended reception and transmission volume: https://www.mercedes-benz-mobile.com/

SETTING THE RINGTONE

Multimedia system:

Phone ▶▶ Ringtones

- ▶ Set the ringtone.

> ⓘ If the mobile phone supports the transfer of the ringtone, you will hear the ringtone of the mobile phone instead of that of the vehicle.

STARTING OR STOPPING MOBILE PHONE VOICE RECOGNITION

Requirements:

- At least one mobile phone is connected to the multimedia system (→ page 556).
- The tab with the mobile phone for which voice recognition should be started is selected (→ page 557).

STARTING MOBILE PHONE VOICE RECOGNITION

- ▶ Press and hold the button on the multifunction steering wheel for more than one second.

  Voice recognition is started for the currently selected mobile phone.

STOPPING MOBILE PHONE VOICE RECOGNITION

- ▶ Press the or button on the multifunction steering wheel.

> ⓘ If a mobile phone is connected via Smartphone Integration, the voice recognition of this mobile phone is always started or stopped.

NOTE ABOUT CONTACT SUGGESTIONS

The multimedia system can show contact suggestions based on frequently used contacts, outgoing calls and text messages. For this, the Allow contact suggestions option must be switched on (→ page 510).

When you open the call list or the message menu, contacts which you can call or write to will be suggested to you. Suggestions will be shown in the Suggestions tab.

> ⓘ The multimedia system does not use the content of messages for suggestions.

SELECTING OPTIONS FOR CONTACT SUGGESTIONS

Requirements:

- The Allow contact suggestions option is switched on (→ page 510).
- The multimedia system has gathered sufficient data in order to show contact suggestions.

Multimedia system:

Phone

▶ Select Call list or Contacts.

▶ Select Suggestions.

▶ Select ••• in the line of the suggested contact.

THE FOLLOWING OPTION IS AVAILABLE FOR SELECTION:

- Do not suggest now

Calls

TELEPHONE OPERATION

Multimedia system:

Phone

MAKING A CALL BY ENTERING THE NUMBERS

▶ Select .

▶ Enter a number.

▶ Select .

The call is made.

ACCEPTING A CALL

▶ Select Accept.

REJECTING A CALL

▶ Select Reject.

ANSWERING A CALL WITH A MESSAGE

▶ Select Message.

ENDING A CALL

▶ Select .

PUTTING A CALL ON IN-CAR OFFICE'S TO-DO LIST

▶ Select Put call on In-Car Office's to-do list.

ACTIVATING FUNCTIONS DURING A CALL

THE FOLLOWING FUNCTIONS ARE AVAILABLE DURING A CALL:

- End call
- Micro. off
- Keypad (show to send DTMF tones)
- Add call
- Hands-free

  Transfer the call, e.g. to Front, Rear or All seats.
- Private mode

  Transfer the call to the telephone or headphones, for example.

▶ Select a function.

ⓘ Observe that the functions and symbols can vary depending on the vehicle equipment.

CONDUCTING CALLS WITH SEVERAL PARTICIPANTS

Requirements:

- There is an active call (⟶ page 560).
- Another call is being made.

SWITCHING BETWEEN CALLS

► Select the contact.

The selected call is active. The other call is on hold.

ACTIVATING A CALL ON HOLD

► Select the contact of the call on hold.

CONDUCTING A CONFERENCE CALL

► Select Conference.

The new participant is included in the conference call.

ENDING AN ACTIVE CALL

► Select End call.

ⓘ On some mobile phones, the call on hold is activated as soon as the active call is ended.

ACCEPTING OR REJECTING A WAITING CALL

Requirements:

- There is an active call (⟶ page 560).

If you receive a call while already in a call, a message is displayed.

Depending on the mobile phone and mobile phone network provider you will hear a call waiting signal.

Alternatively, in two phone mode you will hear an acoustic signal when the call goes through to the other (not yet active) mobile phone.

► Select Accept.

The incoming call is active.

If only one mobile phone is connected with the multimedia system, the previous call will be put on hold.

If during a call you accept a call with the other mobile phone when in two phone mode then the existing call is ended.

or

► Select Message.

The incoming call is not accepted.

You answer with a message.

or

► Select Reject.

ⓘ This function and behaviour depends on your mobile phone network provider and the mobile phone (see the manufacturer's operating instructions).

USING THE INTERNATIONAL DIALLING CODE

Multimedia system:

Phone

► Press and hold "0" until a "+" appears in the selection field.

► Enter the numbers of the country code, regional code and the telephone number.

- Select [ ].
  The call is made.

Contacts

INFORMATION ABOUT THE CONTACTS MENU
The contacts menu contains all contacts from existing data sources, e.g. mobile phone or data storage medium.

DEPENDING ON THE DATA SOURCE, IT IS POSSIBLE TO SAVE/LOAD THE FOLLOWING NUMBER OF CONTACTS:

- Permanently saved contacts: 3,000 entries
- Contacts loaded from the mobile phone: 5,000 entries per mobile phone

FROM THE CONTACTS MENU, YOU CAN PERFORM THE FOLLOWING ACTIONS:

- Make a call, for example call a contact (→ page 563)
- Navigate (→ page 522)
- Compose messages (→ page 565)
- Call up additional options (→ page 563)

Mobile phone contacts are automatically displayed when a mobile phone is connected to the multimedia system (→ page 556).

DOWNLOADING MOBILE PHONE FAVOURITE CONTACTS
If the mobile phone supports the function, the favourites of the mobile phone are automatically loaded and appear in the overview of the phone menu.

CALLING UP CONTACTS
Multimedia system:
[ ] ▶▶ Phone ▶▶ Contacts

THE FOLLOWING OPTIONS CAN BE USED TO SEARCH FOR CONTACTS:

- Searching by initials
- Searching by name
- Searching by phone number

- Enter characters into the search field.
- Select the contact.

A CONTACT CAN CONTAIN THE FOLLOWING DETAILS:

- Phone numbers
- Navigation addresses
- Internet address
- Email addresses
- Relationship (if set)

EDITING THE FORMAT OF A CONTACT'S NAME
Multimedia system:
[ ] ▶▶ Phone ▶▶ [ ]

- Select Contacts.
- Select Name format.
- Select an option.

OVERVIEW OF IMPORTING CONTACTS

IMPORTING CONTACTS INTO THE CONTACTS MENU

Source	Requirements:
USB device	The USB device is connected with the USB port.
Mobile phone	One mobile phone is connected to the multimedia system via Bluetooth®. Contacts are available.

ⓘ Note that the imported contacts remain in the vehicle and can be accessed at any time regardless of the connected mobile phones.

IMPORTING CONTACTS INTO THE CONTACTS MENU

Multimedia system:

→ [⌂] ▶▶ Phone ▶▶ [⚙] ▶▶ Contacts ▶▶ Import contacts

- ▶ Select a mobile phone <Device name>, from which the contacts should be imported.
- ▶ Select an option.

SAVING A MOBILE PHONE CONTACT

Multimedia system:

→ [⌂] ▶▶ Phone ▶▶ Contacts

- ▶ Select [>] in the line of the mobile phone contact.
- ▶ Select [•••].
- ▶ Select Save.
- ▶ Select Yes.

  The contact saved in the multimedia system is identified by the MBUX symbol.

CALLING A CONTACT

Multimedia system:

→ [⌂] ▶▶ Phone ▶▶ Contacts

- ▶ Select [🔍] Search contacts.
- ▶ Enter characters into the search field.
- ▶ Select the contact.
- ▶ Select the telephone number.

  The number is dialled.

SELECTING FURTHER OPTIONS IN THE CONTACTS MENU

Multimedia system:

→ [⌂] ▶▶ Phone ▶▶ Contacts

- ▶ Select [>] in the line of the contact.
- ▶ Select [•••].
- ▶ Select an option.

DELETING CONTACTS

Requirements:

- The contacts are saved in the vehicle.
- To delete an individual contact, this has been imported manually into the vehicle.

Multimedia system:

Phone

DELETING ALL CONTACTS

- Select .
- Select Contacts.
- Select Delete all MBUX contacts.
- Select an option.

DELETING A CONTACT

- Select Contacts.
- Select in the line of the contact.
- Select .
- Select Delete contact.
- Select Yes.

Call list

OVERVIEW OF THE CALL LIST

Depending on whether your mobile phone supports the PBAP Bluetooth® profile or not, this can have different effects on the presentation and functions of the call list.

IF THE PBAP BLUETOOTH® PROFILE IS SUPPORTED, THE EFFECTS ARE AS FOLLOWS:

- The call lists from the mobile phone are displayed in the multimedia system.
- When connecting the mobile phone, you may have to confirm the connection for the PBAP Bluetooth® profile.

IF THE PBAP BLUETOOTH® PROFILE IS NOT SUPPORTED, THE EFFECTS ARE AS FOLLOWS:

- The multimedia system generates a call list independently as soon as calls are made in the vehicle.
- The call list is not synchronised with the call lists in the mobile phone.

MAKING A CALL FROM THE CALL LIST

Multimedia system:

Phone

- Select Call list.
- Select an entry.

  The call is made.

SELECTING ADDITIONAL OPTIONS IN THE CALL LIST

Multimedia system:

Phone

- Select Call list.
- For contacts that are in the address book: select options.

  The contact details are called up.
- For contacts where only one number is shown (not in the address book): select .

DELETING THE CALL LIST
Multimedia system:
Phone ▶▶ <Device name> ▶▶ Devices
▶ Select Delete call list.
▶ Select Yes.

ⓘ This function is only available if your mobile phone does not support the PBAP Bluetooth® profile.

Text messages

OVERVIEW OF THE MESSAGING FUNCTIONS
In the message menu you can receive text messages and create and send them with the help of the MBUX Voice Assistant.

If the connected mobile phone supports the Bluetooth® MAP profile, the message function can be used on the multimedia system.

You can obtain further information about settings and supported functions of Bluetooth®-capable mobile phones from a Mercedes-Benz Service Centre or at: https://www.mercedes-benz-mobile.com/

Some mobile phones require further settings after being connected to the multimedia system to activate the messaging functionality (see the manufacturer's Owner's Manual).

SETTING THE MESSAGE DISPLAY
Multimedia system:
Phone ▶▶ <Device name> ▶▶ Devices
▶ Select Message display.
▶ Select On or Off.

READING MESSAGES
Multimedia system:
Phone ▶▶ <Device name> ▶▶

USING THE READ-ALOUD FUNCTION
A message list is shown.

▶ To read aloud, select the symbol at a conversation.
The message is read aloud.

CREATING AND SENDING A NEW MESSAGE

Requirements:

- There is an Internet connection.
- At least one mobile phone with reception is connected.
- If applicable, the message function must be activated on the mobile phone.

Multimedia system:
Phone ▶▶ <Device name> ▶▶
▶ Using the MBUX Voice Assistant, speak the voice command Send a message to, and name the desired contact (→ page 465).

DICTATING TEXT
▶ Say the message.
You are guided by the voice dialogue.

REPLYING TO A MESSAGE IN THE MESSAGING HISTORY
Multimedia system:
Phone ▶▶ <Device name> ▶▶
A message list is shown.

- Select [>] next to a contact.
  The messaging history with the contact is opened. You will be guided through the steps with the help of a voice dialogue.
- Say the message.

FORWARDING A MESSAGE

Multimedia system:

[home] ▶▶ Phone ▶▶ <Device name> ▶▶ [voice]

A message list is shown.

- Speak the voice command Forward message.
  You are guided by the voice dialogue.

CALLING A MESSAGE SENDER

Multimedia system:

[home] ▶▶ Phone ▶▶ <Device name> ▶▶ [voice]

A message list is shown.

- Select [>] next to a contact.
  The messaging history with the contact is opened.
- Select [•••].
- Select Call.

USING TELEPHONE NUMBERS, URLS OR EMAIL ADDRESSES FROM A TEXT MESSAGE

Requirements:

- An Internet connection is available to call up a URL.

Multimedia system:

[home] ▶▶ Phone ▶▶ <Device name> ▶▶ [voice]

A message list is shown.

- Select [>] next to a contact.
  The messaging history with the contact is opened.
- Select a telephone number or a URL in the message.
  If a URL is selected the web browser opens.
  IF A TELEPHONE NUMBER IS SELECTED THE FOLLOWING OPTIONS ARE AVAILABLE:
  - Call
  - New message

or

- **If In-Car Office and the email function are available:** select an email address.
  In-Car Office opens.

> ⓘ The availability of In-Car Office is country-dependent.

- Select an option.

DELETING A MESSAGE

Multimedia system:

[home] ▶▶ Phone ▶▶ <Device name> ▶▶ [voice]

A message list is shown.

- Select a contact.

- Press and hold on a message.
- **To delete the message:** select Delete.

Apple CarPlay®

OVERVIEW OF APPLE CARPLAY®

WARNING
Risk of distraction from information systems and communications equipment

If you operate information systems and communication devices integrated in the vehicle when driving, you could be distracted from the traffic situation. This could also cause you to lose control of the vehicle.

- Only operate this equipment when the traffic situation permits.
- If you cannot be sure of this, stop the vehicle whilst paying attention to road and traffic conditions and operate the equipment with the vehicle stationary.

You must observe the legal requirements for the country in which you are currently driving when operating the multimedia system.
iPhone® functions can be used via the multimedia system using Apple CarPlay®. They are operated using the touchscreen, Touch Control or Siri® voice control. You can activate voice control by pressing and holding the button on the multifunction steering wheel.

By briefly pressing the button on the multifunction steering wheel you can continue to operate the multimedia system using the MBUX Voice Assistant (→ page 465).

Only one iPhone® at a time can be connected via Apple CarPlay® with the multimedia system.

Also for use of Apple CarPlay® with two phone mode, only one additional mobile phone can be connected using Bluetooth® with the multimedia system.

As access to the iPhone® is restricted by MBUX when an Apple CarPlay® session is active, not all MBUX functions (e.g. dialling from the address book) can be fully provided for the connected device. In this case use Apple CarPlay®.

The full range of functions for Apple CarPlay® is only available with an Internet connection.

The availability of Apple CarPlay® may vary according to the country.

The service provider is responsible for this application and the services and content connected to it.

Apple CarPlay® is a registered trademark of Apple Inc.

INFORMATION ON APPLE CARPLAY®

The Apple CarPlay® symbol in the status line switches within Apple CarPlay® to the last active display.

If route guidance is active on the multimedia system, it is closed when route guidance is started on the mobile phone.

CONNECTING AN IPHONE® VIA APPLE CARPLAY® (WIRED)

Requirements:

- The current version of your device's operating system is being used (see the manufacturer's Owner's Manual).

ⓘ For safety reasons, the first activation of Apple CarPlay® on the multimedia system must be carried out when the vehicle is stationary and the parking brake applied.

▶ Connect the iPhone® to a USB port on the multimedia system using a suitable cable (⟶ page 584).

When the application is connected for the first time, a message about data protection regulations appears.

▶ Select Accept & start if the application should be started.

or

▶ Open the device manager (⟶ page 556).
▶ Start Apple CarPlay® using the relevant symbol next to the device name.

ⓘ If applicable, a message about data protection regulations appears.

▶ If required confirm the use of Apple CarPlay® on your iPhone®.

EXITING APPLE CARPLAY®

▶ Select [⌂].

or

▶ Press the [⌂] button on the multifunction steering wheel (MBUX multimedia system).

ⓘ If Apple CarPlay® was not displayed in the foreground before disconnecting, the application starts in the background when reconnected. You can call up Apple CarPlay® using the Apple CarPlay® symbol in the status line.

CONNECTING AN IPHONE® VIA APPLE CARPLAY® (WIRELESS)

Requirements:

- The current version of your device's operating system is being used (see the manufacturer's operating instructions).
- Bluetooth® is activated on the device (see the manufacturer's operating instructions).
- The device is "visible" for other devices.

ⓘ For safety reasons, the first activation of Apple CarPlay® on the multimedia system must be carried out when the vehicle is stationary and the parking brake applied.

Multimedia system:

[⌂] ▶▶ Phone ▶▶ [⚙] ▶▶ Devices

▶ Connect the mobile phone using Bluetooth® (⟶ page 556).

When the application is connected for the first time, a message about data protection regulations appears.

- Select OK, start Apple CarPlay if the application should be started.
- If required confirm the use of Apple CarPlay® on your iPhone®.

ⓘ It is possible at any time to switch between a connection via Bluetooth® or Apple CarPlay® (wireless) in the device list.

ⓘ If you have already connected a mobile phone via Bluetooth®, you can connect another iPhone® via Bluetooth® to use Apple CarPlay® via the device manager.

EXITING APPLE CARPLAY®

- Select [⌂].

or

- Press the [⌂] button on the Touch Control (MBUX multimedia system).

ⓘ If Apple CarPlay® was not displayed in the foreground before disconnecting, the application starts in the background when reconnected. You can call up Apple CarPlay® using the Apple CarPlay® symbol in the status line.

CALLING UP APPLE CARPLAY® SOUND SETTINGS

Multimedia system:

[⌂] ▶▶ Settings ▶▶ System ▶▶ Audio

- Select the sound settings.

ENDING APPLE CARPLAY®

- Select the Apple CarPlay® symbol in the device manager (telephone, media) that is next to the device name of the iPhone®.

ⓘ Select the Apple CarPlay® symbol in the device manager in the telephone or media applications if Apple CarPlay® should be restarted.

ⓘ If Apple CarPlay® was not displayed in the foreground before disconnecting, the application starts in the background the next time it is started automatically. You can call up Apple CarPlay® using the relevant symbol in the status line.

Android Auto

ANDROID AUTO OVERVIEW

WARNING
Risk of distraction from information systems and communications equipment

If you operate information systems and communication devices integrated in the vehicle when driving, you could be distracted from the traffic situation. This could also cause you to lose control of the vehicle.

- Only operate this equipment when the traffic situation permits.
- If you cannot be sure of this, stop the vehicle whilst paying attention to road and traffic conditions and operate the equipment with the vehicle stationary.

You must observe the legal requirements for the country in which you are currently driving when operating the multimedia system.
Mobile phone functions can be used with Android Auto using the Android operating system on the multimedia system. It is operated using the touchscreen, Touch Control or voice control. You can activate the voice control by pressing and holding the button on the multifunction steering wheel.

By briefly pressing the button on the multifunction steering wheel you can continue to operate the multimedia system using the MBUX Voice Assistant (→ page 465).

Only one mobile phone at a time can be connected via Android Auto to the multimedia system.

Also for use of Android Auto with two phone mode, only one additional mobile phone can be connected using Bluetooth® with the multimedia system.

The full range of functions for Android Auto is only possible with an Internet connection.

The availability of Android Auto and Android Auto apps may vary according to the country.

The service provider is responsible for this application and the services and content connected to it.

INFORMATION ON ANDROID AUTO

The Android Auto symbol in the status line switches within Android Auto to the last active display.

If route guidance is active on the multimedia system, it is closed when route guidance is started on the mobile phone.

CONNECTING A MOBILE PHONE VIA ANDROID AUTO (WIRED)

Requirements:

- The mobile phone supports Android Auto from Android 5.0.
- The current version of the Android Auto app is installed on the mobile phone.
- In order to use the telephone functions, the mobile phone must be connected to the multimedia system via Bluetooth® (→ page 556).

  If there was no prior Internet connection, this is established with the use of the mobile phone with Android Auto.

ⓘ For safety reasons, the first activation of Android Auto on the multimedia system must be carried out when the vehicle is stationary with the parking brake.

- Connect the mobile phone to a USB port on the multimedia system using a suitable cable (⟶ page 584).

  When the application is connected for the first time, a message about data protection regulations appears.

- Select Accept & start if the application should be started.

or

- Open the device manager (⟶ page 556).
- Start Android Auto using the relevant symbol next to the device name.

EXITING ANDROID AUTO

- Select [⌂].

or

- Press the [⌂] button on the Touch Control (MBUX multimedia system).

ⓘ If Android Auto was not displayed in the foreground before disconnecting, the application starts in the background when reconnected. You can call up Android Auto using the Android Auto symbol in the status line.

CONNECTING A MOBILE PHONE VIA ANDROID AUTO (WIRELESS)

Requirements:

- The current version of your device's operating system is being used (see the manufacturer's operating instructions).
- The device supports the Android Auto function (wireless).
- Bluetooth® is activated on the device (see the manufacturer's operating instructions).
- The device is "visible" for other devices.
- Bluetooth® is activated on the multimedia system (⟶ page 507).

ⓘ For safety reasons, the first activation of Android Auto on the multimedia system must be carried out when the vehicle is stationary with the parking brake.

ⓘ The Android Auto function (wireless) is not available in all countries.

Multimedia system:

[⌂] ▶▶ Phone ▶▶ [⚙] ▶▶ Devices

- Connect the mobile phone using Bluetooth® (⟶ page 556).

ⓘ Depending on the device configuration, the query whether Android Auto should be started may appear after connecting the mobile phone via Bluetooth®. In this case, the query must be answered with Yes.

- Select Start Android Auto.
  When the application is connected for the first time, a message about data protection regulations appears.
- Select Accept & start.

ⓘ It is possible at any time to switch between connection via Bluetooth® or Android Auto (wireless) in the device list.

ⓘ If you have already connected a mobile phone via Bluetooth®, you can connect another mobile phone via Bluetooth® to use Android Auto via the device manager.

EXITING ANDROID AUTO

- Select [⌂].

or

- Press the [⌂] button on the Touch Control (MBUX multimedia system).

ⓘ If Android Auto was not displayed in the foreground before disconnecting, the application starts in the background when reconnected. You can call up Android Auto using the Android Auto symbol in the status line.

CALLING UP THE ANDROID AUTO SOUND SETTINGS

Multimedia system:

→ [⌂] ▶▶ Settings ▶▶ System ▶▶ Audio

- Select the sound settings.

ENDING ANDROID AUTO

- Select the Android Auto symbol in the device manager (telephone, media) that is next to the device name of the mobile phone.

ⓘ Select the Android Auto symbol in the device manager if Android Auto should be restarted.

ⓘ If Android Auto was not displayed in the foreground before disconnecting, the application starts in the background the next time it is started automatically. You can call up Android Auto using the Android Auto symbol in the status line.

Transferred vehicle data with Android Auto and Apple CarPlay®

OVERVIEW OF TRANSFERRED VEHICLE DATA

When using Smartphone Integration, certain vehicle data is transferred to the mobile phone. This enables you to get the best out of selected mobile phone services. Vehicle data is not directly accessible.

THE FOLLOWING SYSTEM INFORMATION IS TRANSMITTED:

- Software release of the multimedia system
- System ID (anonymised)

The transfer of this data is used to optimise communication between the vehicle and the mobile phone.

To do this, and to assign several vehicles to the mobile phone, a vehicle identifier is randomly generated.

This has no connection to the vehicle identification number (VIN) and is deleted when the multimedia system is reset (→ page 513).

THE FOLLOWING VEHICLE STATUS DATA IS TRANSMITTED:

- Transmission position engaged
- Distinction between parked, standstill, rolling and driving
- Day/night mode of the display on the instrument cluster
- Drive type

The transfer of this data is used to alter how content is displayed to correspond to the driving situation.

THE FOLLOWING POSITION DATA IS TRANSMITTED:

- Coordinates
- Speed
- Compass direction
- Acceleration direction

This data is used by the mobile phone to improve the accuracy of the navigation (e.g. for continuation in a tunnel).

Online and Internet functions

Internet connection

INFORMATION ON CONNECTING TO THE INTERNET

> ⚠ **WARNING**
> Risk of distraction from information systems and communications equipment
>
> If you operate information systems and communication devices integrated in the vehicle when driving, you could be distracted from the traffic situation. This could also cause you to lose control of the vehicle.
>
> ► Only operate this equipment when the traffic situation permits.
>
> ► If you cannot be sure of this, stop the vehicle whilst paying attention to road and traffic conditions and operate the equipment with the vehicle stationary.

You must observe the legal requirements for the country in which you are currently driving when operating the multimedia system.

> ⚠ **WARNING**
> Risk of accident from operating mobile communication equipment while the vehicle is in motion
>
> Mobile communication devices distract the driver from the traffic situation. This can also cause the driver to lose control of the vehicle.
>
> ► As a driver, only operate mobile communication devices when the vehicle is stationary.
>
> ► As a vehicle occupant, use mobile communication devices only in the designated area, e.g. in the rear passenger compartment.

You must observe the legal requirements for the country in which you are currently driving when operating mobile communication equipment in the vehicle.

DEPENDING ON THE VEHICLE'S EQUIPMENT AND AVAILABILITY IN THE COUNTRY, YOU CAN ESTABLISH AN INTERNET CONNECTION IN THE FOLLOWING WAYS:

- **Vehicles with a communication module:**
  - Using the communication module including data roaming (⟶ page 575)
  - Using Bluetooth® or Wi-Fi with a data-enabled mobile phone
- **Vehicles without a communication module:**
  - Using Bluetooth® or Wi-Fi with a data-enabled mobile phone

The Internet functions can only be used to a limited degree whilst driving.

SETTING UP AN INTERNET CONNECTION USING THE COMMUNICATION MODULE

Requirements:

- The vehicle is equipped with a permanently installed communication module.
- A Mercedes me ID is available.
- The vehicle is connected to a Mercedes me ID.
- The Digital Extra Internet in the Car is activated.

Multimedia system:

Settings ▶▶ System ▶▶ Internet and Bluetooth ▶▶ Manage Internet access

▶ Select Data package.

With most Digital Extras, data volume is available when purchasing the Digital Extras.

Additional data volume is required to use some functions, e.g. web browser or Wi-Fi hotspot.

If the data volume limit is reached, Digital Extras are only available to a limited extent.

Depending on the vehicle equipment, you can purchase a data package directly from a mobile phone network provider via the Mercedes-Benz Store. To be able to use the data package, you must conclude your own contract with a mobile phone network provider via the Mercedes-Benz Store. This can be terminated at any time and incurs no costs. This contract is a prerequisite for being able to use the Digital Extras from the previously purchased package. The availability of this option is dependent on the country.

If the data package option is not available or can be upgraded, you can purchase data volume directly from the mobile phone network provider for a fee.

ⓘ Find out at a Mercedes-Benz service centre whether it is possible in your country to purchase data volume directly from a mobile phone network provider for a fee.

ⓘ Alternatively, and if available, you can utilise the tethering function of a mobile phone via Wi-Fi or Bluetooth® to use the web browser or Wi-Fi hotspot.

ⓘ With external Wi-Fi hotspots, which are encrypted via TKIP, online software updates cannot be carried out via the external Wi-Fi hotspot.

SETTING UP AN INTERNET CONNECTION WITH WI-FI

Requirements:

- The Wi-Fi function is activated on the multimedia system (⟶ page 507).
- The Wi-Fi hotspot function is activated on the mobile phone (see the manufacturer's operating instructions).
- Internet access via Wi-Fi is activated (see the manufacturer's operating instructions).

Multimedia system:

Settings ▶▶ System ▶▶ Internet and Bluetooth ▶▶ Manage Internet access

ⓘ This function is country-dependent.

The mobile phone is listed in the Internet device manager

▶ Select the mobile phone with the Wi-Fi symbol.

The mobile phone is not listed in the Internet device manager

▶ Select Search for access.

▶ Select the mobile phone with the Wi-Fi symbol.

It may take a few seconds until the device is found by the Wi-Fi search.

▶ Log in to a Wi-Fi network (⟶ page 507).

THE INTERNET CONNECTION VIA WI-FI IS RESTRICTED OR DOES NOT FUNCTION IN THE FOLLOWING CASES:

- The mobile phone is switched off
- Mobile data use is deactivated on the mobile phone
- The Wi-Fi function is deactivated on the multimedia system.
- The Wi-Fi function is deactivated on the mobile phone.
- Internet access via Wi-Fi is deactivated on the mobile phone.

SETTING UP AN INTERNET CONNECTION WITH BLUETOOTH®

Requirements:

- The mobile phone supports the Bluetooth® profile PAN (**P**ersonal **A**rea **N**etwork).
- The mobile phone is connected to the multimedia system via Bluetooth® (⟶ page 556).
- Internet access via Bluetooth® is activated (see the manufacturer's operating instructions).

Multimedia system:

Settings ▶▶ System ▶▶ Internet and Bluetooth ▶▶ Manage Internet access

ⓘ This function is country-dependent.

The mobile phone is listed in the Internet device manager

▶ Select the mobile phone with the Bluetooth® symbol.

The mobile phone is not listed in the Internet device manager

▶ Select Search for access.

In the list displayed, all mobile phones already known to the multimedia system are shown. New devices can be set up using the phone application.

▶ Connect the mobile phone using Bluetooth® (⟶ page 556).

ⓘ If a new mobile phone is connected using Bluetooth®, this is also used for the telephone application.

THE INTERNET CONNECTION VIA BLUETOOTH® IS RESTRICTED OR DOES NOT FUNCTION IN THE FOLLOWING CASES:

- The mobile phone is switched off
- The mobile phone network coverage is insufficient

- Mobile data use is deactivated on the mobile phone
- The Bluetooth® function on the multimedia system is switched off and the mobile phone is to be connected via Bluetooth®
- The Bluetooth® function is switched off on the mobile phone and the mobile phone is to be connected via Bluetooth®
- Neither the mobile phone network nor the mobile phone allow simultaneous use of a telephone and an Internet connection
- The mobile phone has not been enabled for Internet access via Bluetooth®

CANCELLING INTERNET ACCESS PERMISSION FOR A MOBILE PHONE

Multimedia system:

→ [⌂] ▸▸ Settings ▸▸ System ▸▸ Internet and Bluetooth ▸▸ Manage Internet access

▶ Select options [•••] next to the name of the mobile phone.

▶ Select Delete configuration.

▶ Select Yes.

ESTABLISHING AN INTERNET CONNECTION

Multimedia system:

→ [⌂] ▸▸ Apps

▶ For example, select [🌐] Browser.

If you select a function that requires an Internet connection and the system is currently offline, a menu opens with a selection of possible Internet accesses as well as all tethering devices that are within range.

▶ Select an Internet access from the list.
The Internet connection is established.

ⓘ The list of possible Internet connections can also be displayed using the extended status line.

ⓘ Depending on the vehicle equipment and country availability, you can establish an Internet connection via the communication module or connected mobile phones.

ⓘ The availability of the web browser depends on the country.

Connection status

CONNECTION STATUS OVERVIEW

DEPENDING ON THE CONNECTION STATUS, THE FOLLOWING SYMBOLS CAN APPEAR ON THE MEDIA DISPLAY IN THE STATUS LINE:

- [📶]: a Wi-Fi device is selected as Internet access.
- [✱]: a Bluetooth® device is selected as Internet access.
- Mobile communications standard (e.g. 4G + double arrow symbol): the communication module is selected as the hotspot.

DISPLAYING THE CONNECTION STATUS

Multimedia system:

→ [⌂]

▶ Briefly press the status line.
The extended status line is displayed.

▶ Briefly press the Internet symbol in the symbol overview.
The current connection status is displayed.

NOTES ON DISPLAYING THE CONNECTION STATUS

- When connecting via Wi-Fi, the connection status and device name are displayed.
- When connecting via a Bluetooth® device, the connection status, device name, and network type are displayed.
- In the case of a connection via the communication module the following status information can be shown:
  - Type of network
  - Status (online, offline, data volumes available or used, limited service)
- For vehicles with a communication module, the connection data of non-user paid Digital Extras can be displayed via Digital Extras.

Web browser

CALLING UP A WEB PAGE

> ⚠ **WARNING**
> Risk of distraction from information systems and communications equipment
>
> If you operate information systems and communication devices integrated in the vehicle when driving, you could be distracted from the traffic situation. This could also cause you to lose control of the vehicle.
>
> ▶ Only operate this equipment when the traffic situation permits.
>
> ▶ If you cannot be sure of this, stop the vehicle whilst paying attention to road and traffic conditions and operate the equipment with the vehicle stationary.

You must observe the legal requirements for the country in which you are currently driving when operating the multimedia system.
Multimedia system:

→ [⌂] ▶▶ Apps ▶▶ [🌐] Browser

CALLING UP A NEW WEB PAGE

▶ Select Search.

▶ Entering a web address.

▶ Select OK.

> ⓘ The function is country-dependent.

> ⓘ No web pages can be displayed on the multimedia system while driving.

CALLING UP A WEBSITE FROM THE BROWSER HISTORY

▶ **To call up the previous page from the history:** select [<].

WEB BROWSER OVERVIEW

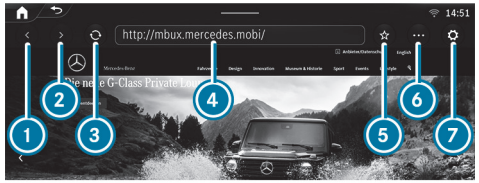

1. Previous website
2. Next website
3. Update

4 URL
5 Adds/removes bookmarks
6 Options
7 Settings

UNDER [•••] YOU HAVE THE FOLLOWING OPTIONS:

- Bookmarks & history
- Reading mode
- Request mobile website

CALLING UP WEB BROWSER OPTIONS

Multimedia system:

[⌂] ▶▶ Apps ▶▶ [🌐] Browser ▶▶ [•••] ▶▶ Bookmarks & history

THE FOLLOWING FUNCTIONS ARE AVAILABLE:

- Bookmarks
- Browsing history
- Entered URLs

▶ Select an option.

▶ Change the settings.

CALLING UP THE WEB BROWSER SETTINGS

Multimedia system:

[⌂] ▶▶ Apps ▶▶ [🌐] Browser ▶▶ [⚙] ▶▶ Settings

THE FOLLOWING FUNCTIONS ARE AVAILABLE:

- Block popups
- Enable cookies
- Enable Javascript

▶ Switch a function on [●] or off [○].

DELETING BROWSER DATA

Multimedia system:

[⌂] ▶▶ Apps ▶▶ [🌐] Browser ▶▶ [⚙] ▶▶ Browser data

THE FOLLOWING SPECIFIC BROWSER DATA CAN BE DELETED:

- Cache
- Cookies
- Form data

▶ Select one of the options shown.

MANAGING BOOKMARKS

Multimedia system:

[⌂] ▶▶ Apps ▶▶ [🌐] Browser ▶▶ [•••]

▶ Select Bookmarks & history.

▶ Select [•••] after the bookmark.

A menu with options opens.

THE FOLLOWING OPTIONS ARE AVAILABLE:

- Delete entry
- Delete all
- Edit
- Share

▶ Select one of the options shown.

SETTING THE WEB BROWSER IN THE BACKGROUND

Multimedia system:

Apps ▶▶ Browser

▶ Press .

Audio playback continues.

TuneIn Radio

CALLING UP TUNEIN RADIO

Requirements

- A user account is available at https://www.mercedes.me.
- The vehicle is linked to the user's Mercedes-Benz account.
- The TuneIn radio service is activated.
- The data volume is available.
  Depending on the country, data volume may need to be purchased.
- A fast Internet connection for data transmission free of interference.

ⓘ The functions and services are country-dependent. For more information, consult a Mercedes-Benz service centre.

Multimedia system:

▶▶ Radio

▶ Select TuneIn Radio.

The TuneIn Radio menu appears. The last station set starts playing.

ⓘ The connection quality depends on the local mobile phone reception.

OVERVIEW OF TUNEIN RADIO

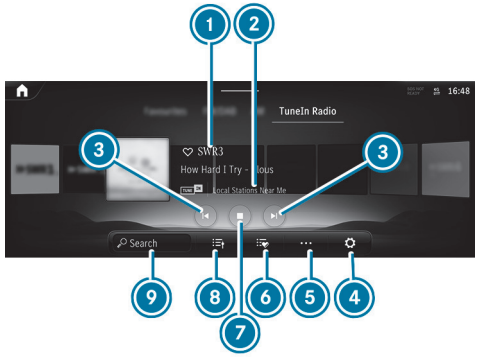

1. Internet radio provider
2. Additional information on the currently selected station
3. Previous or next station
4. Settings
5. Additional options
6. Favourites
7. Controls playback
8. Station list
9. Search

SELECTING AND CONNECTING TUNEIN RADIO STATIONS

Multimedia system:

▶▶ Radio ▶▶ TuneIn Radio

▶ Select .

- Select a category.
- Select a station.
  The connection is established automatically.

or

- Select the search field.
- Enter a station name.

> A relatively large volume of data can be transmitted when using Internet Radio.

SAVING/DELETING TUNEIN RADIO STATIONS AS FAVOURITES

Multimedia system:

→ [home] ▸▸ [radio] Radio ▸▸ TuneIn Radio

SAVING FAVOURITES

- Select a station.
- Press the symbol next to the station name.

DELETING FAVOURITES

- Select a station.
- Press the symbol next to the station name.

SETTING INTERNET RADIO OPTIONS

Multimedia system:

→ [home] ▸▸ [radio] Radio ▸▸ TuneIn Radio ▸▸ [gear] ▸▸ TuneIn

THE FOLLOWING OPTIONS ARE AVAILABLE:

- Select stream: select the stream quality
- Login to TuneIn account: log in to your TuneIn user account
- Log out of account: log out of your TuneIn user account

- Select an option.

Media

Information about media mode

INFORMATION ON SUPPORTED FORMATS AND DATA STORAGE MEDIA

WARNING
Risk of distraction when handling data storage media

If you handle a data storage medium while driving, your attention is diverted from the traffic conditions. This could also cause you to lose control of the vehicle.

► Only handle a data storage medium when the vehicle is stationary.

SUPPORTED FORMATS AND DATA STORAGE MEDIA:

Permissible file systems	FAT32, exFAT, NTFS
Permissible data storage media	USB devices, iPod®/iPhone®, MTP devices, Bluetooth® audio devices
Supported audio formats	MP3, WMA, AAC, WAV, FLAC, ALAC
Supported video formats	MPEG, AVI, MKV, MP4, M4V, WMV

OBSERVE THE FOLLOWING NOTES:

- A total of up to 50000 supported files are managed by the multimedia system.
- Data storage media up to 2 TB are supported (32-bit address space).
- Due to the large variety of available music and video files in terms of encoders, sampling frequencies and data transfer rates, playback cannot be guaranteed.
- Due to the large number of USB devices available on the market, playback of all USB devices cannot be guaranteed.
- Videos are supported up to FullHD (1920x1080).
- Copy-protected music and video files or DRM (Digital Rights Management) encrypted files cannot be played.
- MP3 players must support Media Transfer Protocol (MTP).

INFORMATION ON COPYRIGHT PROTECTION AND TRADEMARKS

Audio files which you create yourself (e.g. copies of data storage media you make yourself) are generally subject to copyright protection. In many countries, reproductions are not permitted without the prior consent of the copyright holder, even for private use. Make sure that you know about the applicable copyright regulations and that you comply with these.

Manufactured under licence from Dolby Laboratories. Dolby, Dolby Audio and the double-D symbol are trademarks of Dolby Laboratories.

For DTS patents see https://patents.dts.com. Manufactured under licence from DTS Licensing Limited. DTS, the Symbol, & DTS and the Symbol together are registered trademarks, and DTS TruVolume is a trademark of DTS, Inc.© DTS, Inc. All Rights Reserved.

DTS® Connected Radio™

For DTS patents see http://patents.dts.com. Manufactured under licence from DTS Licensing Limited. DTS, DTS Connected Radio, and the DTS logo are registered trademarks or trademarks of DTS, Inc. in the United States and other countries. © 2020 DTS, Inc. ALL RIGHTS RESERVED. Lyrics licensed and provided by Lyric Find™. Content licensed and sourced from Radioplayer™.

Gracenote, the Gracenote logo and logotype, "Powered by Gracenote", MusicID and Playlist Plus are either registered trademarks or trademarks of Gracenote, Inc. in the United States and/or other countries.

This product contains Spotify software that is subject to the following third-party licences: https://www.spotify.com/connect/third-party-licenses

TIDAL

TIDAL and TIDAL logo are registered trademark of Aspiro AB in the European Union and other countries.

Overview of the media menu

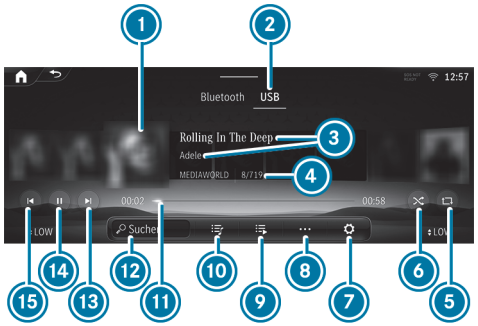

1. Album cover
2. Active media source
3. Track and artist
4. Active data storage medium and current track number/track in playback list
5. Repeat
6. Random playback
7. Settings
8. Additional options
9. Additional categories
10. Playlists and categories
11. Timeline
12. Media search
13. Next track or fast forward
14. Controls playback
15. Previous track or fast rewind

Connecting the data storage media to the multimedia system

CONNECTING USB DEVICES

NOTE
Damage caused by high temperatures

High temperatures can damage USB devices.

► Remove the USB device after use and take it out of the vehicle.

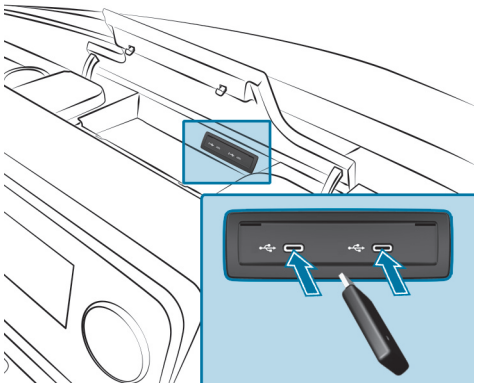

The multimedia connection unit is located at the top centre of the storage compartment and has two type C USB ports.

- Connect the USB device to the USB port.

> When connecting several Apple® devices at the same time, pay attention to the connection sequence. The multimedia system only connects with the device that is connected first. Additional Apple® devices that are connected at the same time are only supplied with power.

SEARCHING FOR AND AUTHORISING A BLUETOOTH® AUDIO DEVICE

Requirements:

- Bluetooth® is activated on the multimedia system and audio device.
- The audio device supports the Bluetooth® audio profiles A2DP and AVRCP.
- The audio device is "visible" for other devices.

Multimedia system:

Media » Bluetooth »

AUTHORISING A NEW BLUETOOTH® AUDIO DEVICE

- Select Connect new device.

  Detected equipment is displayed in the device list.

- Select an audio device.

  Authorisation starts. A code is displayed on the multimedia system and on the mobile phone.

- If the codes are identical, confirm on the audio device.

- Select Only as Bluetooth audio device.

  The Bluetooth® audio device is connected with the multimedia system.

CONNECTING A PREVIOUSLY AUTHORISED BLUETOOTH® AUDIO DEVICE

- Select a Bluetooth® audio device from the list.

  The connection is established.

Starting media playback

A data storage medium is connected to the multimedia system.

Multimedia system:

Media

- Select USB or Bluetooth as the media source.

Controlling media playback

Multimedia system:

Media

- **To pause playback: select** [⏸].
- **To continue playback:** select [▶].
- **To repeat a track:** select [🔁].

  FOR THE REPEAT FUNCTION THERE ARE THE FOLLOWING SETTINGS:

  - **Select once:** the active playlist is repeated.
  - **Select twice:** the current track is repeated.
  - **Select three times:** the repeat function is deactivated.
- **To play back tracks in random order:** select [🔀].
- **To rewind or fast-forward a track:** tap on the desired point on the timeline.
- **To select the next track:** select [⏭].
- **To select the previous track:** select [⏮].
- **To scroll through tracks quickly:** press and hold [⏮] or [⏭].
- **To show the current track list:** select [♫].

Additional options for setting media playback

Multimedia system:

Media

CALLING UP ADDITIONAL OPTIONS

- Select [•••].

  The additional options are shown.
- Select an option.

Music online

CALLING UP MUSIC ONLINE

Multimedia system:

Media

- Select Online music.

Music playback can be controlled with the Touch Control or by using the media application.

SEARCHING FOR MUSIC IN ONLINE MUSIC

Multimedia system:

Media Online music

SEARCHING FOR CATEGORIES IN ONLINE MUSIC

The media content of the streaming provider can be scanned through in the category search. The available categories and the symbol for the category search depend on the streaming provider.

- Start the category search.

  The list of available categories appears.

- Select a category.

KEYWORD SEARCH IN ONLINE MUSIC

You can look for content using the keyword search with free text input.

- Select [ ].
  A keyboard for character entry appears.
- Enter the term searched for.

> The more characters entered when using the keyword search, the more concrete the search results are.

- Select the desired entry from the result list.
  Depending on the selected hit, playback is started or a lower level in the search is opened.

CALLING UP ONLINE MUSIC SETTINGS

Multimedia system:

[ ] >> Media >> Online music

- Select [ ].
- Select Music services.
- Select [ ] next to a streaming provider.
- Select a setting.

> Information about the linked accounts can be displayed using the [ ] gearwheel symbol next to the configured streaming provider. The available information depends on what is offered by the provider of the streaming service.

Media search

INFORMATION ABOUT THE SEARCH FUNCTION IN CATEGORIES

Under [ ] you can search through all available media files. There are several categories available for selection. The categories shown depend on the connected device and data format.

> The categories are available as soon as the entire media content has been read in and analysed.
> Availability of the media search with Android devices may be limited.

STARTING A SEARCH IN CATEGORIES

Multimedia system:

[ ] >> Media >> [ ]

- Select a category.

USING THE KEYWORD SEARCH

Multimedia system:

[ ] >> Media

You can look for content using the keyword search with free text input.

- Select [ ].
  A keyboard for character entry appears.
- Enter the term searched for.

> The search begins with the first character entered. The more characters entered the more concrete the search results become.

- Select the desired entry from the result list.
  If a list with several tracks is selected, then this is opened in the search.
  To playback all of the tracks in the list, select [•••] and then Play now.

Radio

Switching on the radio

Multimedia system:

Radio

- Start the application on the multimedia system home screen.
  The radio display appears. You will hear the last station played on the last frequency band selected.

Radio overview

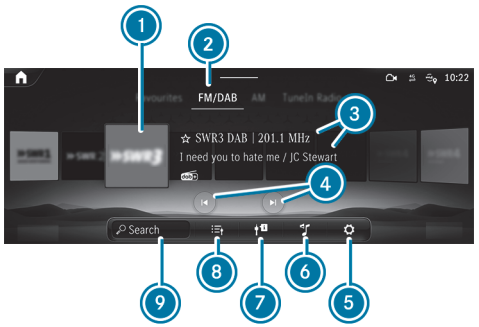

1. Preview picture
2. Active frequency band
3. Station name, set frequency and additional information on the station
4. Previous or next station
5. Settings
6. Sound settings
7. Switches on traffic reports
8. Station list
9. Search

Setting the frequency band

Multimedia system:

Radio

- Select a frequency band or a favourite.

Selecting a radio station

Multimedia system:

Radio

- Swipe to the left or right on the control element or select a radio station.

Calling up the radio station list

Multimedia system:

Radio

- Select .
  The station list appears.
- Swipe the station list up or down.
- Select a station.

Searching for radio stations using station names or frequency entry

Multimedia system:

Radio

- Select .
- Enter a station name or frequency.
- Select a station.

Storing radio stations

Multimedia system:

Radio

- Select a radio station.
- Select .

Managing favourites

Multimedia system:

Radio Favourites

MOVING STATIONS

- Press .
  The list of favourites appears.
- Press to the far right of the station name.
- Select Move.
- Move the station to the new position.

Switching traffic announcements on/off

Multimedia system:

Radio General

- Activate or deactivate Traffic announcements.

Displaying radio text

Multimedia system:

Radio Active frequency band

- Activate or deactivate Radio text information.

Sound

Sound settings

INFORMATION ABOUT THE SOUND SYSTEM
The sound system has a total output of 100 W and is equipped with seven speakers. It is available for all functions in the radio and media modes.

> ⓘ The call can also be made from other audio sources. Replace Media with, for example, Radio in the menu path.

CALLING UP THE SOUND MENU
Multimedia system:
→ [⌂] ▸▸ Media ▸▸ [⚙]

- Select one of the functions shown to make settings.

ADJUSTING TREBLE, MID-RANGE AND BASS SETTINGS
Multimedia system:
→ [⌂] ▸▸ Media ▸▸ [⚙]

- Set Treble, Mid or Bass.

SWITCHING LOUDNESS NORMALISATION ON OR OFF
Multimedia system:
→ [⌂] ▸▸ Media ▸▸ [⚙] ▸▸ Loudness normalisation

The function compensates for differing loudness when changing between audio sources and within an audio source. Several levels are available for this purpose. The currently set level is displayed.

Loudness normalisation can also be switched off.

- Switch on one level.

or

- Switch off loudness normalisation.

SETTING THE BALANCE AND FADER
Multimedia system:
→ [⌂] ▸▸ Media ▸▸ [⚙] ▸▸ Balance and Fader

SETTING THE BALANCE

- In the grid shown, move the volume distribution between the right and left speakers in the vehicle.

  The volume is distributed between the right and left-hand speakers.

ADJUSTING THE FADER

- In the grid shown, move the volume distribution between the front and rear speakers in the vehicle.

  The volume is distributed between the front and rear speakers.

Back to Contents

Transporting

This interactive PDF works like a website – tap or click a button to jump straight to where you want to go.
You can return here at any time via the navigation bar at the top left.

Notes on loading guidelines
Notes on distributing the load within the vehicle
Securing loads
Carrier systems
Placing a load on the wheel arch

Notes on loading guidelines

DANGER
Risk of poisoning from exhaust gases

Combustion engines emit poisonous exhaust gases such as carbon monoxide. Exhaust gases can enter the vehicle interior if the rear-end door is open when the engine is running, especially if the vehicle is in motion.

- ► Always switch off the engine before opening the rear-end door.
- ► Never drive with the rear-end door open.

WARNING
Risk of injury from unsecured objects in the vehicle

When objects are unsecured or inadequately secured, they can slip, tip over or be thrown about, striking vehicle occupants.

THIS ALSO APPLIES TO:

- luggage or loads
- seats which have been removed and are being transported in the vehicle in an exceptional case

There is a risk of injury, particularly in the event of braking manoeuvres or abrupt changes in direction.

- ► Always stow objects in such a way that they cannot be tossed about.
- ► Before travelling, secure objects, luggage or load to prevent them slipping or tipping over.
- ► When a seat is removed, keep it preferably outside the vehicle.

WARNING
Risk of injury due to unsuitable stowage of objects

If objects in the vehicle interior are stowed incorrectly, they may slide or be thrown around and hit vehicle occupants. In addition, cup holders, open stowage spaces and mobile phone receptacles may not, in the event of an accident, retain all the objects they contain.

There is a risk of injury, particularly in the event of braking manoeuvres or abrupt changes in direction.

- Always stow objects in such a way that they cannot be thrown around in these or similar situations.
- Always ensure that objects do not protrude from stowage compartments, luggage nets or stowage nets.
- Close the lockable stowage spaces before starting a journey.
- Stow and secure objects that are heavy, hard, pointed, sharp-edged, fragile or too large in the load compartment.

WARNING
Risk of burns from the tailpipe and tailpipe trims

The exhaust tailpipe and tailpipe trims can become very hot. If you come into contact with these parts of the vehicle, you could burn yourself.

- Always be particularly careful around the tailpipe and the tailpipe trims and supervise children especially closely in this area.
- Allow vehicle parts to cool down before touching them.

If you are using a roof luggage rack, please note the maximum roof load and the maximum load capacity of the roof luggage rack. (→ page 758)

Camera-based driving systems and the sensor functions of the inside rear-view mirror may be impaired if you are transporting a load on the roof and it protrudes more than 40 cm over the front edge of the roof. Therefore, make sure that the load does not protrude by more than 40 cm.

The handling characteristics of your vehicle are dependent on the load distribution.

THEREFORE, PLEASE OBSERVE THE FOLLOWING NOTES WHEN LOADING:

- When transporting a load, never exceed the permissible gross mass or the permissible axle loads for the vehicle (including occupants).
- The load must not protrude above the upper edge of the seat backrests.
- If possible, always transport the load in the load compartment.
- Fasten the load to the tie-down eyes and distribute the load evenly among them.

- Use tie-down eyes and fastening materials which are suitable for the weight and size of the load.

Notes on distributing the load within the vehicle

NOTE
Risk of damage to the floor covering

Excessive point loading on the load compartment floor or on the load area can negatively affect the driving characteristics and could damage the floor covering.

- **Vehicles with rear-wheel drive:** distribute the load uniformly. When doing so, ensure that the overall centre of gravity of the load is always as low and close to the centre as possible and between the axles near the rear axle.
- **Vehicles with front-wheel drive:** distribute the load uniformly. When doing so, ensure that the overall centre of gravity of the load is always as low and close to the centre as possible and between the axles near the front axle.
- **Vehicles with all-wheel drive:** distribute the load uniformly. When doing so, ensure that the overall centre of gravity of the load is always as low and close to the centre as possible and between the axles.

FOR PANEL VANS AND TOURERS:

- always transport loads in the load compartment.
- always place the load against the seat backrests of the rear bench seat.
- move large and heavy loads as far towards the front of the vehicle as possible, against the rear bench seat. stow loads flush behind the rear bench seat.
- always additionally secure the load with suitable load securing aids or lashing material.
- the load must not protrude above the upper edge of the seat backrests.
- transport loads behind seats that are not occupied.
- If the rear bench seat is not occupied, insert the seat belts crosswise into the seat belt buckle of the opposite seat belt.

Securing loads

Notes on load securing

WARNING
Risk of accident and injury due to incorrect use of the lashing straps

THE FOLLOWING CAN OCCUR:

- the tie-down eyes may detach or the lashing strap may tear if the permissible load is exceeded
- the load cannot be restrained

The load can slip, tip over or be flung about, striking vehicle occupants.

► Always tension the lashing straps in the proper manner and only between the described tie-down eyes.

► Always use lashing straps designed specifically for the loads.

Observe the information relating to the maximum loading capacity of the individual lashing points. If you combine various lashing points to secure a load, always take the maximum loading capacity of the weakest lashing point into account. For example, during an emergency stop, forces act which can multiply the weight of the load. Always use several lashing points to distribute the load. Spread the load evenly between the lashing points or tie-down eyes.

Observe the Owner's Manual or the lashing strap manufacturer's instructions for how to use the lashing strap.

Information on the maximum loading capacity of the lashing points can be found in the "Technical data" chapter in the printed Owner's Manual.

AS THE DRIVER, YOU ARE RESPONSIBLE FOR ENSURING THE FOLLOWING:

- The load is secured against slipping, tipping, rolling or falling off.

  Take usual traffic conditions as well as swerving or full brake application and bad roads into account.
- The applicable requirements and guidelines relating to load-securing practices are met.

  If this is not the case, this may constitute a punishable offence, depending on local legislation and any ensuing consequences. Observe country-specific laws.

Make sure that the load is secure before every journey and at regular intervals during a long journey. Adjust the load securing as necessary. Information on how to secure loads correctly can be obtained from the manufacturers of the load securing aids or lashing systems for load securing, for example.

WHEN SECURING LOADS, OBSERVE THE FOLLOWING:

- Fill spaces between the load and the load compartment walls or wheel wells. For this purpose, use rigid load securing aids, such as chocks, wooden shims or padding.
- Secure non-tilting and stable loads in all directions.

  Use the lashing points or tie-down eyes and the loading rails in the load compartment.

  Only use lashing equipment tested in accordance with applicable standards (e.g. DIN EN), for example, locking bars, lock rods or lashing nets and lashing straps. Always use the lashing points closest to the load and pad sharp edges.

  Loads, and heavy loads in particular, should preferably be secured using the tie-down eyes.

ⓘ You can obtain lashing material tested in accordance with current standards (e.g. DIN EN) from any specialist company or from a qualified specialist workshop.

NOTES ON THE PARTITION

Without a partition, vehicles that are registered as commercial vehicles (vehicle class N1, N2) do not fulfil the ISO 27956 standard, which describes fixtures for securing loads correctly in delivery vans. If the vehicle is used to transport goods, retrofitting the partition is strongly recommended, as properly securing the load in a vehicle without a partition will always be a complex operation.

ⓘ Nothing may be stowed in the area between the back of the seats and the partition.

Overview of lashing points

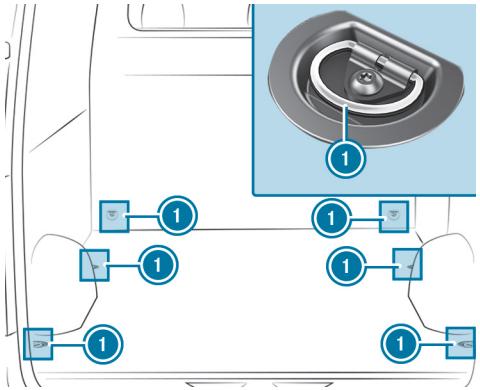

Lashing points (example: panel van without loading rails)

1 Tie-down eyes

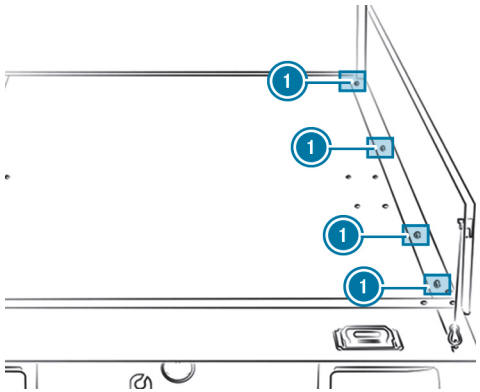

Lashing points (example: platform vehicle)

1 Tie-down eyes

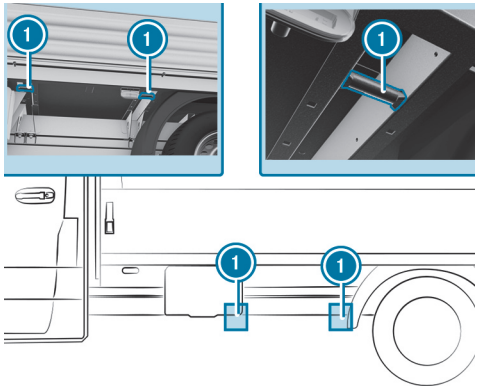

Lashing points (example: platform vehicle)

1 Tie-down eyes

Once you have removed the platform dropsides, you can use the lashing points on the bottom left and right of the crossmember.

Secure loose loads, in particular on the load surface of a platform vehicle, with an approved lashing net or tarpaulin.

Always fasten the lashing net or tarpaulin to all available lashing points. Make sure that the fastening hooks are secured against accidental opening.

If your vehicle is equipped with loading rails in the load compartment floor, you can place lashing rods directly in front of and behind the load. The lashing rods directly absorb the potential shifting forces.

Securing loads on the load compartment floor by lashing them down is only recommended for lightweight loads. Lay anti-slip mats under the load to assist in securing it.

Fitting and removing tie-down eyes

- **To fit:** slide the tie-down eye through a recess in the loading rail close to the load until the locking mechanism engages in the recess.

> ⓘ When you pull the locking mechanism up and out of the recess, the tie-down eye is able to move within the loading rail. Make sure that the locking mechanism is always engaged in a recess.

- Check the tie-down eye for firm seating.
- **To remove:** pull the locking mechanism up and pull the tie-down eye towards the locking mechanism and out of the loading rail through a recess.

Carrier systems

Information on the roof luggage rack

WARNING
Risk of injury if maximum roof load is exceeded

The vehicle centre of gravity and the usual driving characteristics, as well as the steering and braking characteristics, will change.

If you exceed the maximum roof load, the driving characteristics, as well as the steering and braking characteristics, will be greatly impaired.

- Always comply with the maximum roof load and adjust your driving style.

NOTE
Vehicle damage due to failure to observe the maximum permissible clearance height

If the vehicle height exceeds the maximum permissible clearance height, the roof and other vehicle parts may be damaged.

- Please observe the indicated maximum clearance height.
- If the vehicle exceeds the permissible clearance height, do not drive in.
- Take the modified vehicle height in the case of roof superstructures or other carrier systems into account.

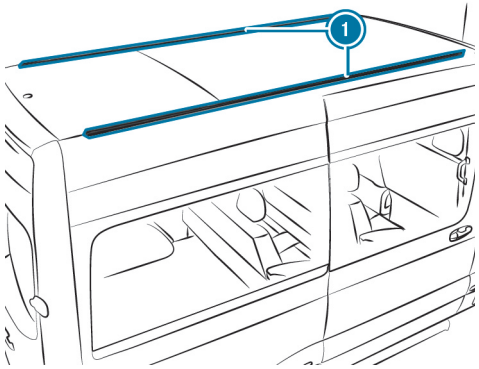

1 Mounting rails

Information about the maximum roof load can be found in the "Technical data" section (⟶ page 758).

OBSERVE THE FOLLOWING POINTS FOR INSTALLING ROOF LUGGAGE RACKS:

- Tighten the screws of the roof luggage rack to a torque of 8 Nm – 10 Nm in the designated sliding blocks.
- The tightened screws should not touch the rails.
- Ensure that the sliding blocks are not located in the areas around the plastic caps.
- The sliding blocks must have the right cross-section.
- The insides of the mounting rails must be free of dirt.
- Re-tighten the screws uniformly after around 500 km.

Mercedes-Benz recommends that you use only roof luggage racks that have been tested and approved for Mercedes-Benz. These will help to prevent vehicle damage.

Have mounting rails retrofitted only at a qualified specialist workshop. Otherwise, you could damage the vehicle.

If your vehicle is equipped with mounting rails on the roof, you can install a roof luggage rack on the roof. Special fasteners (sliding blocks) are available as accessories for this purpose.

These fasteners are available from any Mercedes-Benz service centre.

Ladder rack

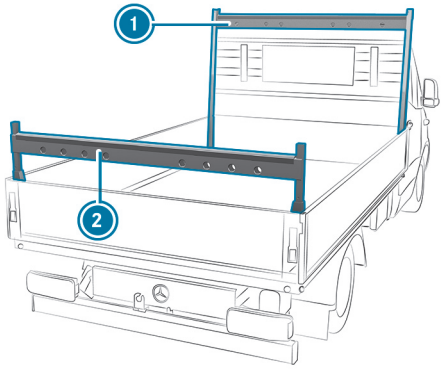

Ladder rack on a platform vehicle (example)

1. Front ladder rack
2. Rear ladder rack

Comply with the important safety instructions in the section entitled "Notes on loading" (⟶ page 593).

Information about the maximum load for ladder racks can be found in the section entitled "Technical data" in the printed Owner's Manual.

Placing a load on the wheel arch

Comply with the important safety notes under "Notes on loading" (⟶ page 593).

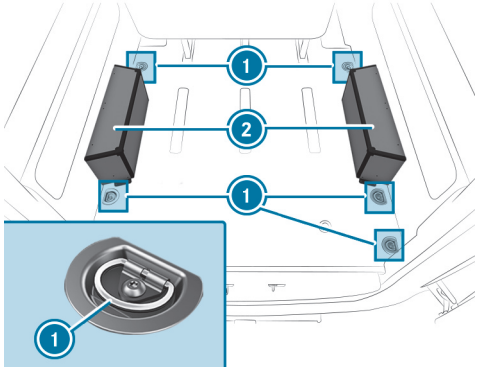

- Place the objects on wheel arch 2 and lash them using tie-down eyes 1 (⟶ page 53).

ⓘ A wheel arch may be subjected to a load of 150 kg.

Maintenance and care

This interactive PDF works like a website – tap or click a button to jump straight to where you want to go.
You can return here at any time via the navigation bar at the top left.

ASSYST PLUS service interval display

Engine compartment

Cleaning and care

ASSYST PLUS service interval display

Function of the ASSYST PLUS service interval display

The ASSYST PLUS service interval display on the instrument cluster provides information on the remaining time or distance before the next service due date.

You can hide this service message by using the back button on the left-hand side of the steering wheel.

Under arduous operating conditions or if the vehicle is subjected to increased loads, the ASSYST PLUS service interval display may shorten the service interval.

You can obtain further information regarding servicing of your vehicle from a qualified specialist workshop, e.g. a Mercedes-Benz service centre.

Displaying the service due date

Requirements

- The ignition is switched on.

On-board computer:

Service ▶▶ ASSYST PLUS

The next service due date is displayed.

- ▶ **To exit the display:** press the 'Back' button on the left-hand side of the steering wheel.

REFER ALSO TO THE FOLLOWING RELATED TOPIC:

- Operating the on-board computer (→ page 452)

Carrying out maintenance work on a regular basis

NOTE
Premature wear through failure to observe service due dates

Service work which is not carried out at the right time or incompletely can lead to increased wear and damage to the vehicle.

- ▶ Observe the specified service intervals. If there are any uncertainties regarding the service due date, forexample if the battery is disconnected, operating conditions are difficult, etc., contact a qualified specialist workshop.
- ▶ Have the prescribed service work carried out at a qualified specialist workshop.

Special service requirements

The prescribed service interval is based on normal vehicle use. Perform maintenance work more often than prescribed if the vehicle is operated under arduous operating conditions or increased loads.

The ASSYST PLUS service interval display serves solely as an aid. The driver of the vehicle is responsible for ensuring that servicing work is performed more often than prescribed due to actual operating conditions and/or increased operational demands.

EXAMPLES OF ARDUOUS OPERATING CONDITIONS:

- Regular city driving with frequent intermediate stops
- Mainly short-distance driving
- Frequent operation in mountainous terrain or on poor road surfaces
- When the engine is regularly left idling for long periods
- Operation in particularly dusty conditions and/or if air-recirculation mode is frequently used

In such operating conditions or similar, have the interior air filter, air filter, engine oil and oil filter changed more frequently, forexample.

Check the tyres more frequently if the vehicle is operated under increased stress. You can obtain further information at a qualified specialist workshop.

Non-operational times with the battery disconnected

THE ASSYST PLUS SERVICE INTERVAL DISPLAY CAN CALCULATE THE SERVICE DUE DATE ONLY WHEN THE BATTERY IS CONNECTED.

▶ Display and note down the service due date on the instrument cluster before disconnecting the battery.

- Displaying the service due date (⟶ page 604).

Engine compartment

Opening and closing the bonnet

WARNING
Risk of accident due to driving with the bonnet unlocked

The bonnet may open and block your view.

- ► Never release the bonnet when driving.
- ► Before every trip, ensure that the engine bonnet is locked.

WARNING
Risk of accident and injury when opening and closing the bonnet

The bonnet may suddenly drop into the end position.

There is a risk of injury for anyone in the engine bonnet's range of movement.

- ► Do not open or close the bonnet if there is a person in the bonnet's range of movement.

WARNING
Risk of burns when opening the bonnet

IF YOU OPEN THE BONNET IN THE EVENT OF AN OVERHEATED ENGINE OR FIRE IN THE ENGINE COMPARTMENT, THE FOLLOWING SITUATIONS MAY OCCUR:

- You may come into contact with hot gases.
- You may come into contact with other escaping hot operating fluids.

- ► Before opening the bonnet, allow the engine to cool down.
- ► In the event of a fire in the engine compartment, keep the bonnet closed and call the fire service.

WARNING
Risk of injury due to moving parts

Components in the engine compartment can continue to run or start unexpectedly even when the ignition is switched off.

Observe the following before performing tasks in the engine compartment:

- ► Switch off the ignition.
- ► Never touch the danger zone surrounding moving components, e.g. the rotation area of the fan.
- ► Remove jewellery and watches.
- ► Keep items of clothing and hair away from moving parts.

WARNING
Risk of injury from touching components under voltage

The ignition system and the fuel injection system operate at high voltage. You could receive an electric shock.

- ► Never touch ignition system or fuel injection system components when the vehicle is switched on.

Live component parts of the fuel injection system include the injectors, for example.

LIVE COMPONENT PARTS OF THE IGNITION SYSTEM INCLUDE THE FOLLOWING, FOR EXAMPLE:

- Ignition coils
- Spark plug connectors
- Diagnostic socket

WARNING
Risk of burns from hot component parts in the engine compartment

Certain component parts in the engine compartment can be very hot, e.g. the engine, the cooler and parts of the exhaust system.

- ► Allow the engine to cool down and only touch component parts described in the following.

IF YOU HAVE TO CARRY OUT ANY WORK IN THE ENGINE COMPARTMENT, TOUCH ONLY THE FOLLOWING COMPONENT PARTS:

- Bonnet
- Engine oil filler opening cap
- Washer fluid reservoir cap
- Coolant expansion reservoir cap

WARNING
Risk of injury from using the windscreen wipers when the bonnet is open

If the windscreen wipers start moving when the bonnet is open, you could be trapped by the wiper linkage.

- ► Always switch off the windscreen wipers and vehicle before opening the engine bonnet.

NOTE
Damage to bonnet or windscreen wipers when opening the bonnet

If the windscreen wipers have been folded back from the windscreen when the bonnet is opened, the windscreen wipers or the bonnet may be damaged.

- Ensure that the windscreen wipers have not been folded back from the windscreen.

OPENS THE BONNET

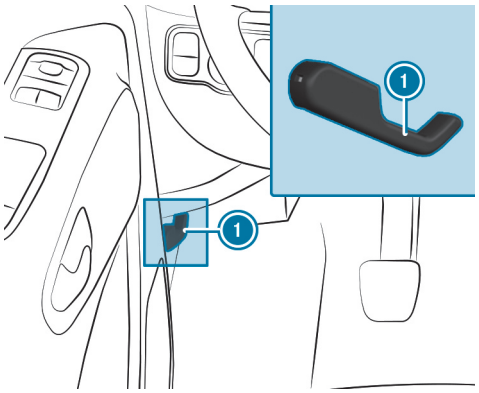

- Park the vehicle safely and on a surface that is as level as possible.
- Switch off the vehicle.
- Secure the vehicle against rolling away.

WARNING
Risk of injury when the bonnet is opened

The bonnet may suddenly drop into the end position.

There is a risk of injury for anyone in the bonnet's range of movement.

- Before releasing the bonnet, ensure that the support is firmly seated in the holder.
- Open the bonnet only when there is no-one in its range of movement.

- Pull the handle (1) to release the bonnet.
- Reach into the gap and push the bonnet catch handle upwards.
- Open the bonnet and hold it in the open position.

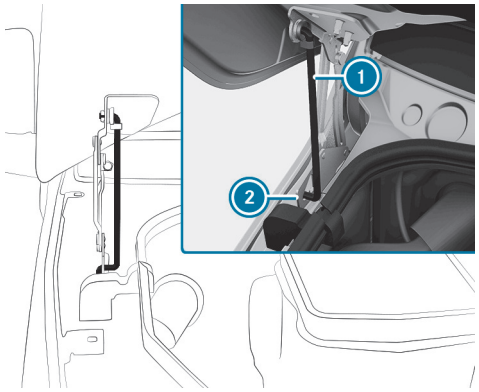

- Take the support (1) from the holder on the bonnet and pull it downwards.

- Insert the support into the holder below ②.

CLOSING THE BONNET

> ⚠ **WARNING**
> Risk of fire due to flammable materials in the engine compartment or on the exhaust system
>
> Flammable materials may ignite.
>
> - Ensure that there are no flammable external materials in the engine compartment or on the exhaust system after maintenance work has been carried out.

> ⚠ **WARNING**
> Risk of accident and injury when opening and closing the bonnet
>
> The bonnet may suddenly drop into the end position.
>
> There is a risk of injury for anyone in the engine bonnet's range of movement.
>
> - Do not open or close the bonnet if there is a person in the bonnet's range of movement.

> ! **NOTE**
> Damage to the bonnet
>
> Pushing the bonnet closed with your hands could damage it.
>
> - To close the bonnet, let it drop from the specified height.

- Lift the bonnet slightly.
- Move the support ① to the holder on the bonnet and apply light pressure to engage it.
- Lower the bonnet and let it drop from a height of approximately 15 cm.
- If it is still possible to lift the bonnet a little, open the bonnet again and let it drop from a height of approximately 20 cm until it engages correctly.

Engine oil

CHECKING THE ENGINE OIL LEVEL WITH THE ON-BOARD COMPUTER

Requirements

- The vehicle is level during the measuring process.
- The bonnet is closed.
- Depending on the driving profile, the oil level can be displayed only after a driving time of up to 30 minutes and only when the vehicle is switched on.

On-board computer:

Service ▶▶ Engine oil level

ONE OF THE FOLLOWING MESSAGES APPEARS ON THE INSTRUMENT CLUSTER:

- Engine oil level Measuring now...: it is not yet possible to display the oil level. Repeat the query after driving for a maximum of 30 minutes.
- Engine oil level OK and the bar indicating the oil level on the instrument cluster is green and is between "min." and "max.": the oil level is correct.

- Engine oil level Drive until engine is warm: warm up the engine to operating temperature.
- Engine oil level Correct measurement only if vehicle is on level ground: park the vehicle on a level surface.
- Engine oil level Top up 1,0 l and the bar indicating the oil level on the instrument cluster is orange and is below "MIN": add 1 l of engine oil.
- Reduce engine oil level and the bar indicating the oil level on the instrument cluster is orange and is above "MAX": drain off excess engine oil. Consult a qualified specialist workshop.
- For engine oil level, switch on vehicle: switch on the vehicle.
- Engine oil level System inoperative: the sensor is defective or not connected. Consult a qualified specialist workshop.
- Engine oil level System currently unavailable: close the bonnet.

ⓘ **Vehicles with cold oil level display:** the oil level will automatically be displayed on the instrument cluster after the vehicle has been non-operational for an extended period. If it is not possible to measure the engine oil level, a corresponding message is relayed.

ⓘ The result of the electronic measurement always takes precedence over other measurements.

TOPPING UP THE ENGINE OIL

⚠ **WARNING**
Risk of burns when opening the bonnet

IF YOU OPEN THE BONNET IN THE EVENT OF AN OVERHEATED ENGINE OR FIRE IN THE ENGINE COMPARTMENT, THE FOLLOWING SITUATIONS MAY OCCUR:

- You may come into contact with hot gases.
- You may come into contact with other escaping hot operating fluids.

- Before opening the bonnet, allow the engine to cool down.
- In the event of a fire in the engine compartment, keep the bonnet closed and call the fire service.

WARNING
Risk of injury due to moving parts

Components in the engine compartment can continue to run or start unexpectedly even when the ignition is switched off.

Observe the following before performing tasks in the engine compartment:

- ► Switch off the ignition.
- ► Never touch the danger zone surrounding moving components, e.g. the rotation area of the fan.
- ► Remove jewellery and watches.
- ► Keep items of clothing and hair away from moving parts.

WARNING
Risk of burns from hot component parts in the engine compartment

Certain component parts in the engine compartment can be very hot, e.g. the engine, the cooler and parts of the exhaust system.

- ► Allow the engine to cool down and only touch component parts described in the following.

IF YOU HAVE TO CARRY OUT ANY WORK IN THE ENGINE COMPARTMENT, TOUCH ONLY THE FOLLOWING COMPONENTS:

- Bonnet
- Engine oil filler opening cap
- Washer fluid reservoir cap
- Coolant expansion reservoir cap

WARNING
Risk of fire and injury from engine oil

If engine oil comes into contact with hot component parts in the engine compartment, it may ignite.

- ► Make sure that no engine oil is spilled next to the filler opening.
- ► Allow the engine to cool off and thoroughly clean the engine oil from component parts before starting the vehicle.

NOTE
Engine damage caused by an incorrect oil filter, incorrect oil or additives

- ► Do not use engine oils or oil filters other than those which meet the specifications necessary for the prescribed service intervals.

Mercedes-Benz recommends using original or tested replacement and service parts.

- ► Do not alter the engine oil or oil filter in order to achieve longer change intervals than prescribed.
- ► Do not use additives.
- ► Follow the instructions on the service interval display regarding oil changes.

NOTE
Damage caused by topping up too much engine oil

Excess engine oil can damage the engine or catalytic converter.

- Have excess engine oil removed at a qualified specialist workshop.

ENVIRONMENTAL NOTE
Environmental damage due to hydraulic fluid level spillages while topping up

If fluid spills onto soil, the environment will be damaged.

- Make sure that no fluid spills while topping up.

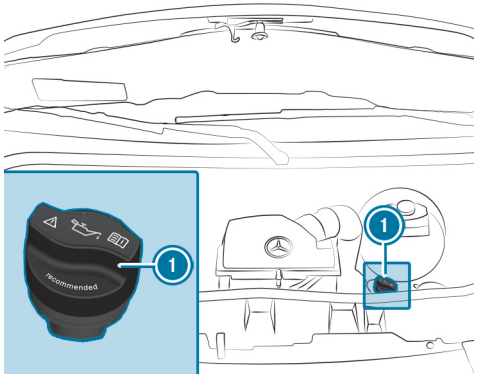

OM654 engine, rear-wheel and all-wheel drive

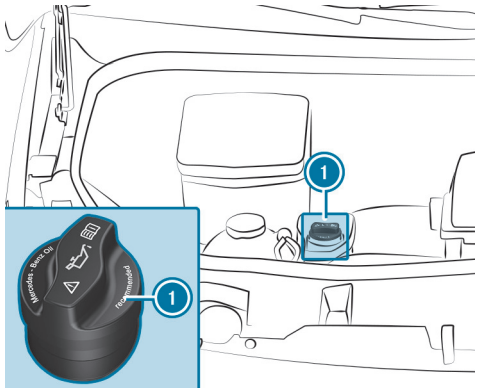

OM654 engine, front-wheel drive

- Turn the cap (1) anti-clockwise and remove it.
- Top up the engine oil.
- Replace the cap (1) on the filler opening and turn it clockwise until it engages.
- Check the oil level again (→ page 45).

It is necessary to run the engine for an extended period after each oil top-up to correctly detect the oil level. Fill level changes during oil top-ups may not be immediately visible. Depending on the driving profile, the new oil level can be displayed only after a driving time of up to 60 minutes.

To avoid damage due to overfilling, do not top up with more than 1 litre.

Check the oil level again after an extended period.

Checking/topping up the coolant

WARNING
Risk of burns when opening the bonnet

IF YOU OPEN THE BONNET IN THE EVENT OF AN OVERHEATED ENGINE OR FIRE IN THE ENGINE COMPARTMENT, THE FOLLOWING SITUATIONS MAY OCCUR:

- You may come into contact with hot gases.
- You may come into contact with other escaping hot operating fluids.

► Before opening the bonnet, allow the engine to cool down.

► In the event of a fire in the engine compartment, keep the bonnet closed and call the fire service.

WARNING
Risk of injury due to moving parts

Components in the engine compartment can continue to run or start unexpectedly even when the ignition is switched off.

Observe the following before performing tasks in the engine compartment:

► Switch off the ignition.

► Never touch the danger zone surrounding moving components, e.g. the rotation area of the fan.

► Remove jewellery and watches.

► Keep items of clothing and hair away from moving parts.

WARNING
Risk of burns from hot component parts in the engine compartment

Certain component parts in the engine compartment can be very hot, e.g. the engine, the cooler and parts of the exhaust system.

► Allow the engine to cool down and only touch component parts described in the following.

IF YOU HAVE TO CARRY OUT ANY WORK IN THE ENGINE COMPARTMENT, TOUCH ONLY THE FOLLOWING COMPONENT PARTS:

- Bonnet
- Engine oil filler opening cap

- Washer fluid reservoir cap
- Coolant expansion reservoir cap

WARNING
Risk of fire- and injury from antifreeze

If antifreeze comes into contact with hot component parts in the engine compartment, it may ignite.

- ▶ Allow the engine to cool down before you top up the anti-freeze.
- ▶ Make sure that no antifreeze spills out next to the filler opening.
- ▶ Thoroughly clean the antifreeze from component parts before starting the vehicle.

WARNING
Risk of scalding from hot coolant

You may scald yourself if you open the cap when the drive system is at normal operating temperature.

- ▶ Allow the drive system to cool down before opening the cap.
- ▶ When opening the cap, wear protective gloves and safety glasses.
- ▶ Open the cap slowly to release pressure.

Check and top up the coolant only when the vehicle is stationary and level and the engine and engine cooling system have cooled down. The coolant temperature must be below 50 °C.

The coolant temperature must be below 50 °C.

NOTE
Paintwork damage due to coolant

If coolant gets on painted surfaces, the paintwork can be damaged.

- ▶ Add coolant carefully.
- ▶ Remove spilled coolant.

CHECKING THE COOLANT LEVEL

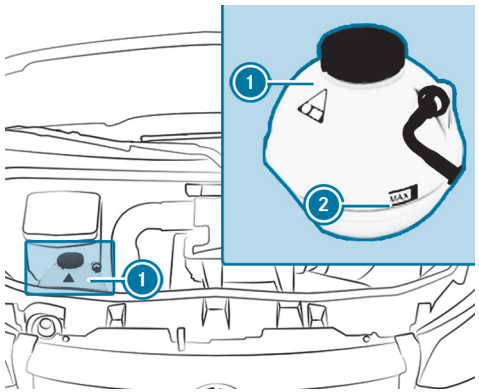

Coolant expansion reservoir (example)

- ▶ Park the vehicle on a level surface.
- ▶ Open the bonnet (→ page 606).
- ▶ Slowly turn the coolant expansion reservoir cap (1) half a turn anti-clockwise to release overpressure.
- ▶ Continue to turn the coolant expansion reservoir cap (1) and remove it.

- Check the coolant level.
  There is enough coolant in the coolant expansion reservoir if the coolant reaches the lower MAX mark (2).

TOPPING UP THE COOLANT

- Refill the coolant to the lower MAX mark (2) on the coolant expansion reservoir.

Use only coolant approved by Mercedes-Benz to avoid damaging the engine cooling system.

- Replace the coolant expansion reservoir cap (1) and tighten it in a clockwise direction.
- Start the vehicle.
- After about five minutes, switch off the vehicle again and allow it to cool down.
- Check the coolant level again and top up the coolant as necessary.

Topping up the windscreen washer system

WARNING
Risk of burns when opening the bonnet

IF YOU OPEN THE BONNET IN THE EVENT OF AN OVERHEATED ENGINE OR FIRE IN THE ENGINE COMPARTMENT, THE FOLLOWING SITUATIONS MAY OCCUR:

- You may come into contact with hot gases.
- You may come into contact with other escaping hot operating fluids.

- Before opening the bonnet, allow the engine to cool down.
- In the event of a fire in the engine compartment, keep the bonnet closed and call the fire service.

WARNING
Risk of injury due to moving parts

Components in the engine compartment can continue to run or start unexpectedly even when the ignition is switched off.

Observe the following before performing tasks in the engine compartment:

- Switch off the ignition.
- Never touch the danger zone surrounding moving components, e.g. the rotation area of the fan.
- Remove jewellery and watches.
- Keep items of clothing and hair away from moving parts.

WARNING
- Risk of fire and injury due to windscreen washer concentrate

Windscreen washer concentrate is highly flammable. It could ignite if it comes into contact with hot engine component parts or the exhaust system.

- Make sure that no windscreen washer concentrate spills out next to the filler opening.

WARNING
Risk of burns from hot component parts in the engine compartment

Certain component parts in the engine compartment can be very hot, e.g. the engine, the cooler and parts of the exhaust system.

- Allow the engine to cool down and only touch component parts described in the following.

IF YOU HAVE TO CARRY OUT ANY WORK IN THE ENGINE COMPARTMENT, TOUCH ONLY THE FOLLOWING COMPONENT PARTS:

- Bonnet
- Engine oil filler opening cap
- Washer fluid reservoir cap
- Coolant expansion reservoir cap

NOTE
Damage to the exterior lighting due to unsuitable windscreen washer fluid

Unsuitable windscreen washer fluids may damage the plastic surface of the exterior lighting.

- Only use windscreen washer fluids that are also suitable for use on plastic surfaces, e.g. MB SummerFit or MB WinterFit.

TOPPING UP THE WASHER FLUID

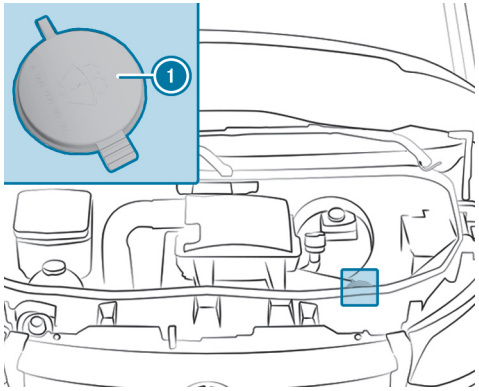

Washer fluid reservoir (example)

- Pre-mix the washer fluid in the correct mixing ratio in a container.
- Park the vehicle on a level surface and secure it against rolling away (→ page 361).
- Open the bonnet (→ page 606).
- Pull the cap (1) of the washer fluid reservoir upwards by the tab.
- Pour in the pre-mixed washer fluid.
- Push the cap (1) onto the filler opening until it audibly engages.
- Close the bonnet (→ page 606).

Cleaning the water drain valve of the air intake box

WARNING
Risk of injury due to moving parts

Components in the engine compartment can continue to run or start unexpectedly even when the ignition is switched off.

Observe the following before performing tasks in the engine compartment:

- Switch off the ignition.
- Never touch the danger zone surrounding moving components, e.g. the rotation area of the fan.
- Remove jewellery and watches.
- Keep items of clothing and hair away from moving parts.

WARNING
Risk of burns from hot component parts in the engine compartment

Certain component parts in the engine compartment can be very hot, e.g. the engine, the cooler and parts of the exhaust system.

- Allow the engine to cool down and only touch component parts described in the following.

IF YOU HAVE TO CARRY OUT ANY WORK IN THE ENGINE COMPARTMENT, TOUCH ONLY THE FOLLOWING COMPONENTS:

- Bonnet
- Engine oil filler opening cap
- Washer fluid reservoir cap
- Coolant expansion reservoir cap

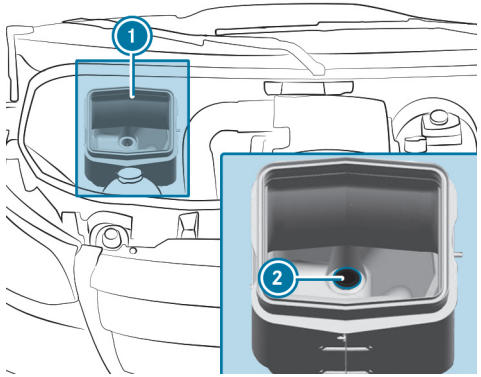

► Open the bonnet (⟶ page 606).

► Remove dirt from water drain valve (2) of air intake box (1).

Draining the fuel filter

WARNING
Risk of fire or explosion from fuel

Fuels are highly flammable.

► Fire, naked flames, smoking and creating sparks must be avoided.

► Before filling up, switch off the vehicle, and, if applicable, the auxiliary heating.

WARNING
Risk of fire and explosion due to fuel

Fuels are highly flammable. There is a risk of fire and explosion due to contact with hot component parts.

► Allow the engine and the exhaust system to cool down.

NOTE
Engine damage due to delayed draining of the fuel filter

Vehicles with a diesel engine: delayed draining of the fuel filter can lead to engine damage.

If the indicator lamp lights up, drain the fuel filter immediately.

ENVIRONMENTAL NOTE
Environmental pollution due to disposal in a environmentally irresponsible manner

- Dispose of the water/fuel mixture in an environmentally responsible manner.

VEHICLES WITH REAR WHEEL DRIVE:

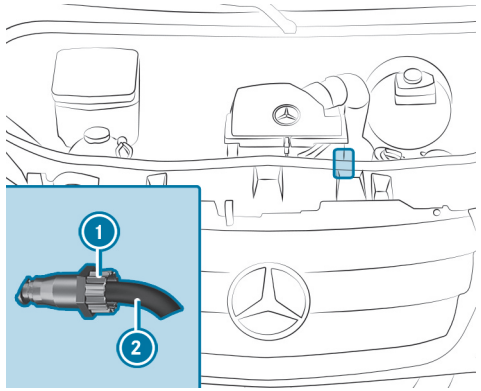

OM654 engine

- Park the vehicle in a safe location and secure it against rolling away.
- Switch off the auxiliary heating (→ page 294).
- Switch off the vehicle.
- Open the bonnet (→ page 606).
- Place a suitable collecting pan beneath the dump hose (2).
- Switch on the vehicle.
- Open the drain screw (1) until the water/fuel mixture emerges from the dump hose (2).
- Close the drain screw (1) immediately upon approx. 0.2 litres of the water/fuel mixture being collected.
  After 30 seconds, the electrical fuel pump will automatically stop discharge of the water/fuel mixture.
- Switch the vehicle off after draining.
- Dispose of the collected water/fuel mixture in an environmentally responsible manner, e.g. at a qualified specialist workshop.
- Ensure that the drain screw (1) has been closed.
  If the vehicle is running while the drain screw (1) is open, fuel will be lost through the dump hose (2).
- (→ page 606)Close the bonnet.
- **The indicator lamp does not go out after draining:** Drain the fuel filter again.
- **The indicator lamp does not go out after the second draining:** Consult a qualified specialist workshop.

Mercedes-Benz recommends that you have the fuel filter drained at a qualified specialist workshop.

VEHICLES WITH ALL-WHEEL DRIVE:

- Have the fuel filter drained by a qualified specialist workshop.

Cleaning and care

Information on washing the vehicle in an automatic car wash

WARNING
Risk of an accident due to reduced braking power after washing the vehicle

Braking efficiency is reduced after washing the vehicle.

► After the vehicle has been washed, brake carefully while paying attention to the traffic conditions until braking power has been fully restored.

NOTE
Damage to the vehicle due to automatic braking

IF ONE OF THE FOLLOWING FUNCTIONS IS ACTIVATED, THE VEHICLE WILL BRAKE AUTOMATICALLY IN CERTAIN SITUATIONS:

- Active Brake Assist
- Active Distance Assist DISTRONIC
- HOLD function

To avoid damage to the vehicle, deactivate these systems in the following or similar situations:

► When towing

► In a car wash

NOTE
Damage due to unsuitable car wash

- Before driving into a car wash make sure that the car wash is suitable for the vehicle dimensions.
- Ensure there is sufficient ground clearance between the underbody and the guide rails of the car wash.
- Ensure that the clearance width of the car wash, in particular the width of the guide rails, is sufficient.

TO AVOID DAMAGE TO YOUR VEHICLE, OBSERVE THE FOLLOWING BEFORE USING AN AUTOMATIC CAR WASH:

- The car wash is suitable for the size of the vehicle.
- Active Brake Assist is deactivated.
- Active Distance Assist DISTRONIC is deactivated.
- The HOLD function is switched off.
- The side windows and the sliding window are completely closed.
- The outside mirrors are folded in and any additional antenna is removed.
- The blower for ventilation and heating is switched off.
- The windscreen wiper switch is in position 0.

If the vehicle is extremely dirty, wash off excess dirt before cleaning the vehicle in an automatic car wash.

AFTER LEAVING THE CAR WASH, PAY ATTENTION TO THE FOLLOWING:

- The outside mirrors are fully folded out again and any additional antenna is mounted again.
- Remove wax residues on the windscreen and wiper rubbers to prevent smearing and reduce wiper noise.

Remove wax residues from the camera lens in vehicles with a reversing camera (→ page 624).

Information on using a high-pressure cleaner

WARNING
Risk of an accident when using high-pressure cleaners with round-spray nozzles

The water jet can cause externally invisible damage.

Components damaged in this way may unexpectedly fail.

- Do not use a high-pressure cleaner with round-spray nozzles.
- Have damaged tyres or chassis parts replaced immediately.

NOTE
Damage to component parts due to improper high-pressure cleaning

Components can be damaged if the distance of the high-pressure nozzle is too small.

- Maintain a minimum distance of about 30 cm between the high-pressure nozzle and car parts.
- Do not use a high-pressure cleaner with a round-spray nozzle.
- Keep the water jet moving constantly while cleaning.
- Do not clean the following components with the high-pressure cleaner:
  - electrical components
  - plug connectors
  - reversing camera
  - drivetrain
  - seals
  - hoses

NOTE
Damage caused by the use of a high-pressure cleaner in the vehicle interior

The pressurised water created by the high-pressure cleaner and the associated spray could cause considerable damage to the vehicle.

- Never use a high-pressure cleaner in the vehicle interior.

NOTE
Damage to the emissions control system due to improper cleaning

Cleaning the system when it is warm or the direct effect of water jets in the exhaust pipe can damage the emissions control system.

- Clean the system only when it is cold.
- Do not direct the water jet into the exhaust pipe.

Never use a high-pressure cleaner in the vehicle interior. The pressurised water created by the high-pressure cleaner and the associated spray could cause considerable damage to the vehicle.

TO AVOID DAMAGE TO YOUR VEHICLE, OBSERVE THE FOLLOWING WHEN USING A HIGH-PRESSURE CLEANER:

- Maintain a minimum distance of 30 cm to the vehicle when using 25° flat-spray nozzles and concentrated-power jets and observe the information in the equipment manufacturer's operating instructions.
- Do not direct the nozzle of the high-pressure cleaner directly at sensitive parts such as tyres, gaps, electrical components, batteries, illuminants and louvres.
- Maintain a minimum distance of 50 cm for a reversing camera.

Washing the vehicle by hand

Observe the legal requirements. Forexample, in a number of countries, washing by hand is permitted only in specially designated wash bays. In this case, make sure that a specially designated wash bay is used for washing by hand.

- ► Use a mild cleaning agent, e.g. a car shampoo which has been approved for Mercedes-Benz.
- ► Wash the vehicle with lukewarm water and a soft car sponge. Do not expose the vehicle to direct sunlight when washing the vehicle.
- ► Carefully spray the vehicle with water and dry off with a chamois. Ensure that the water jet is not pointed directly towards air inlet grilles. Do not leave the blower running.
- ► Do not let the cleaning agent dry on the paintwork.

When operating the vehicle in winter, remove all traces of road salt deposits carefully and as soon as possible.

Notes on paintwork care

NOTE
Paintwork damage and corrosion due to inadequate care

Failure to promptly and thoroughly remove dirt from bird droppings or other residue could result in paintwork damage and corrosion at a later date.

- ► Clean dirt off paint and matt finish thoroughly and as soon as possible.

Observe the notes on cleaning and care to avoid paintwork damage.

PAINT

- Insect remnants: soak with insect remover and then wipe the treated areas clean.
- Bird droppings: soak with water and then wipe the treated areas clean.
- Tree resin, oils and greases: remove by rubbing gently with a cloth soaked in surgical spirit or lighter fluid.
- Coolant and brake fluid: remove with a damp cloth and clean water.
- Tar stains: use tar remover.
- Wax: use silicone remover.
- Do not attach stickers, films or similar materials.
- Remove any staining as soon as possible.

MATT FINISH

- Only use care products approved for Mercedes-Benz.
- Do not polish the vehicle and light-alloy wheels.
- Only use car washes that comply with the latest engineering standards. If in doubt, always consult the car wash operator, in particular whether the car wash is suitable for cleaning and care of matt paint finishes.
- Do not use car wash programmes with a final hot wax treatment.
- Do not use paint cleaners, buffing or polishing products, gloss preservers, e.g. wax.
- Always have paintwork repairs carried out at a qualified specialist workshop.

Notes on care of vehicle parts

WARNING
Risk of injury if unsuitable climbing aids are used

IN THE EVENT THAT YOU USE OPENINGS IN THE BODYWORK OR ATTACHMENTS AS STEPS, YOU COULD:

- Slip and/or fall.
- Damage the vehicle and thus slip and fall.

► Always use non-slip, stable climbing aids, e.g. a suitable ladder.

WARNING
Risk of entrapment if the windscreen wipers are switched on while the windscreen is being cleaned

If the windscreen wipers are set in motion while you are cleaning the windscreen or wiper blades, you can be trapped by the wiper arm.

► Always switch off the windscreen wipers and the vehicle before cleaning the windscreen or wiper blades.

WARNING
Risk of burns from the tailpipe and tailpipe trims

The exhaust tailpipe and tailpipe trims can become very hot. If you come into contact with these parts of the vehicle, you could burn yourself.

► Always be particularly careful around the tailpipe and the tailpipe trims and supervise children especially closely in this area.

► Allow vehicle parts to cool down before touching them.

NOTE
Damage caused by the use of openings in the bodywork or detachable part as a step

Using the lower guide of the sliding door (carriage) as a step can damage the trim and/or mechanism of the sliding door.

► Do not use the guide of the sliding door (carriage) as a step.

ⓘ Information on suitable cleaning agents or cleaning cloths can be obtained from a qualified specialist workshop.

OBSERVE THE FOLLOWING INFORMATION:

	Notes on cleaning and care	Preventing damage to the vehicle
Wheels/rims	Use water and acid-free wheel cleaner.	• Do not use acidic alloy wheel cleaners to remove brake dust. Wheel bolts and brake components could otherwise become damaged. • To avoid corrosion of brake discs and brake linings, drive for a few minutes after cleaning before parking the vehicle. The brake discs and brake linings will heat up and dry out.
Windows	Clean windows on the inside and outside with a damp cloth and with a cleaning agent recommended for Mercedes-Benz.	Do not use dry cloths or abrasive or solvent-based cleaning agents to clean the insides of windows.
Wiper blades	The wiper blades are coated with graphite. This coating could be eradicated or become damaged during cleaning. As a consequence, wiping quality and performance may deteriorate and produce inconvenient noise.	To protect the coating, do not routinely clean the wiper blades. If the wiper blades are very dirty, they can be cleaned with a soft, damp cloth. Gently wipe the wiper blade lip once with the cloth, applying light pressure.
Exterior lighting	Clean the lenses with a wet sponge and mild cleaning agent (e.g.car shampoo).	Use only cleaning agents or cloths suitable for plastic lenses.
Sensors	Clean the sensors in the front and rear bumper and in the radiator shells with a soft cloth and car shampoo.	When using a high-pressure cleaner, maintain a minimum distance of 30 cm.
Reversing camera and **360° camera**	Use clean water and a soft cloth to clean the camera lens.	Do not use a high-pressure cleaner.
Trailer hitch	• Remove traces of rust on the ball (e.g.with a wire brush). • Remove dirt with a lint-free cloth. • After cleaning, lightly oil or grease the ball head. • Observe the notes on care in the trailer hitch manufacturer's instruction manual.	Do not clean the ball neck with a high-pressure cleaner or solvent.
Sliding door	• Remove foreign objects from the vicinity of the contact plates and contact pins of the sliding door. • Clean the contact plates and contact pins with a mild cleaning agent and a soft cloth.	Do not oil or grease the contact plates or the contact pins.

	Notes on cleaning and care	Preventing damage to the vehicle
Steps	• Clean the electrically operated steps and their housing with a high-pressure cleaner. • After cleaning, spray the lateral guides with silicone spray. • Clean the steps in the bumper with a high-pressure cleaner.	Do not use oil or grease as an anti-seize agent.
Aluminium dropsides	Brush down the aluminium dropsides with water and a neutral or mild alkaline cleaning agent.	Do not use abrasive cleaning agents to clean the dropsides.

Notes on cleaning and care of the interior

WARNING
Risk of injury from plastic parts breaking off after the use of solvent-based care products

Care and cleaning products containing solvents can cause surfaces in the cockpit to become porous. When the airbags are deployed, plastic parts may break away.

► Do not use any care or cleaning products containing solvents to clean the cockpit.

WARNING
Risk of injury or fatal injuries from bleached seat belts

Bleaching or dyeing seat belts can severely weaken them.

This can, for example, cause seat belts to tear or fail in an accident.

► Never bleach or dye seat belts.

DANGER
Risk of fatal injuries due to electric shock

If you clean the 230 V socket with a wet cloth, you can receive an electric shock.

There is a risk of fatal injury!

► Avoid the area around the 230 V socket when cleaning.

NOTE
Damage to property due to incorrect leather care

The steering wheel, seat covers and other parts of the vehicle interior can be made of leather.

Leather becomes brittle and can crack if it is incorrectly cared for or cleaned.

- ► If it gets dirty, thoroughly wipe it with a damp cloth (water or mild soapy water) or use leather care agents or cleaners that have been recommended and approved by Mercedes-Benz. Then wipe it over again with a dry cloth.
- ► Do not use a microfibre cloth for cleaning.
- ► Do not soak the leather.
- ► Do not use cleaning agents containing solvents such as tar remover or wheel cleaner, polishes or waxes.

NOTE
Property damage due to disinfectants

The interior includes a number of sensitive surfaces such as displays, plastics and leather.

Disinfectants can contain alcohol and other substances that penetrate and damage surfaces. Technology behind buttons and displays can also be damaged.

- ► Do not use disinfectant on interior surfaces.

To prevent damage to the vehicle, observe the following notes for cleaning and care:

SEAT BELTS
- Clean with lukewarm, soapy water.
- Do not use chemical cleaning agents.
- Do not dry seat belts by heating them to over 80°C or exposing them to direct sunlight.

PLASTIC TRIM
- Clean with a damp microfibre cloth.
- If very dirty: use a cleaning agent recommended for Mercedes-Benz.
- Do not attach stickers, films or similar materials.
- Do not allow to come into contact with cosmetics, insect repellent or sun creams.

HEADLINER
- Clean with a brush or dry shampoo.

CARPET
- Use a carpet and textile cleaning agent recommended for Mercedes-Benz.

GENUINE LEATHER SEAT COVERS

NOTE
Damage caused by wrong cleaners

- ► Do not use solvent-based cleaning agents such as tar remover or wheel cleaner; neither should you use polishes or waxes. Otherwise you may damage the finish.

- Clean with a damp cloth and then wipe with a dry cloth.

- Leather care: use a leather care agent recommended for Mercedes-Benz.
- Do not allow the leather to become too damp.
- Do not use a microfibre cloth.

IMITATION LEATHER SEAT COVERS

- Vacuum up dirt suchas crumbs or dust and then use a damp cotton cloth and a 1% soap solution to clean the entire seat cover.
- Use cleaning and care products recommended for Mercedes-Benz.
- Do not use a microfibre cloth.
- Do not use any oil-based cleaning and care products.
- Do not spot-clean.

CLOTH SEAT COVERS

- Vacuum up dirt suchas crumbs or dust and then use a damp microfibre cloth and a 1% soap solution to clean the entire seat cover.
- Use cleaning and care products recommended for Mercedes-Benz.
- Do not use any oil-based cleaning and care products.
- Do not spot-clean.

STEERING WHEEL AND GEAR OR SELECTOR LEVER

- Clean with a damp cloth.

STEERING WHEEL MADE FROM GENUINE LEATHER

> **NOTE**
> Damage caused by wrong cleaners
>
> ► Do not use solvent-based cleaning agents such as tar remover or wheel cleaner; neither should you use polishes or waxes. Otherwise you may damage the finish.

- Clean with a damp cloth and a 1% soap solution and then wipe with a dry cloth.
- If very dirty: use a cleaning agent recommended for Mercedes-Benz.
- Leather care: use a leather care agent recommended for Mercedes-Benz.
- Do not allow the leather to become too damp.
- Do not use a microfibre cloth.

> ⓘ Leather is a natural product. It exhibits natural surface properties, suchas differences in structure, marks caused by growth and injury or subtle colour differences.

PEDALS AND FLOOR MATS

- Clean with a damp cloth.
- Do not use any cleaning and care products.

GENUINE WOOD AND TRIM ELEMENTS

- Clean with a microfibre cloth.
- Black piano-lacquer look: clean with a damp cloth and soapy water.
- If very dirty: use a cleaning agent recommended for Mercedes-Benz.
- Do not use any cleaning agents, polishes or waxes containing solvents.

VEHICLE INTERIOR

- Clean with a damp cloth.
- Do not use a high-pressure cleaner.
- Allow the vehicle interior to dry completely after cleaning.
- Do not allow liquids to penetrate into gaps or cavities.

CURTAINS

- The curtains may be dry-cleaned only.
- Do not wash the curtains.

Back to Contents

Breakdown assistance

This interactive PDF works like a website – tap or click a button to jump straight to where you want to go.
You can return here at any time via the navigation bar at the top left.

Emergency
Mercedes-Benz emergency call system
Flat tyre
Battery
Towing or tow-starting
Electrical fuses
Vehicle tool kit
Hydraulic jack

Emergency

Removing the safety vest

► Remove the safety vest from the stowage compartment in the driver's door.

ⓘ Safety vests can also be stored in the stowage compartments of the rear doors and the co-driver door.

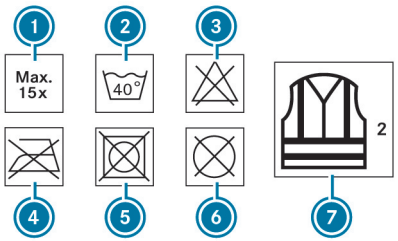

1. Maximum number of washes
2. Maximum wash temperature
3. Do not bleach
4. Do not iron
5. Do not tumble dry
6. Do not dry-clean
7. This is a class 2 vest

The safety vest only fulfils the legally required standards if it is the correct size and is completely closed.

REPLACE THE SAFETY VEST IF:

- damaged or if the reflex strips are dirty
- the maximum permitted number of washes is exceeded
- the safety vest's fluorescence has faded

Warning triangle

REMOVING THE WARNING TRIANGLE

The warning triangle is located in the stowage compartment in the front passenger door.

► Take the warning triangle out of the stowage compartment.

SETTING UP THE WARNING TRIANGLE

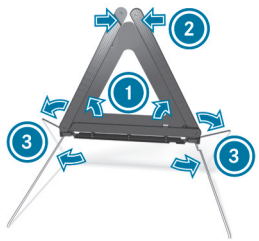

► Fold side reflectors ① upwards to form a triangle and lock using the upper snap fastener ②.

► Fold the feet ③ down and out to the side.

Removing the first-aid kit (soft sided)

The first-aid kit (soft sided) is located in the storage compartment in the front passenger door.

- Remove the first-aid kit (soft sided) from the storage compartment.

Removing the warning lamp

The warning lamp is located in the stowage compartment in the co-driver's door.

- Remove the warning lamp from the stowage compartment.

Removing and stowing the fire extinguisher

WARNING
Risk of accident due to an incorrectly secured fire extinguisher in the driver's footwell

A fire extinguisher may impede pedal travel or block a depressed pedal.

This jeopardises the operating and road safety of the vehicle.

The fire extinguisher can be flung around and injure the driver or other vehicle occupants.

- Always store and secure the fire extinguisher in the bracket.
- Do not remove the fire extinguisher while driving.

REMOVING AND STOWING

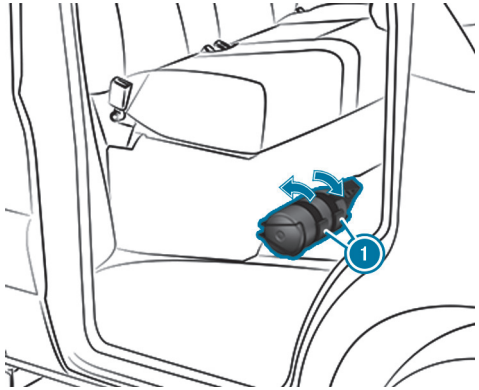

- Open the front passenger door.
- **To remove:** pull the tabs on the bracket of the fire extinguisher (1) upwards.
- Remove the fire extinguisher.
- **To stow:** stow the fire extinguisher.
- Push the tabs on the bracket of the fire extinguisher (1) downwards.

In a right-hand drive vehicle, the fire extinguisher is located by the front passenger seat on the left as viewed in the direction of travel.

INDONESIA: REMOVE AND STOW

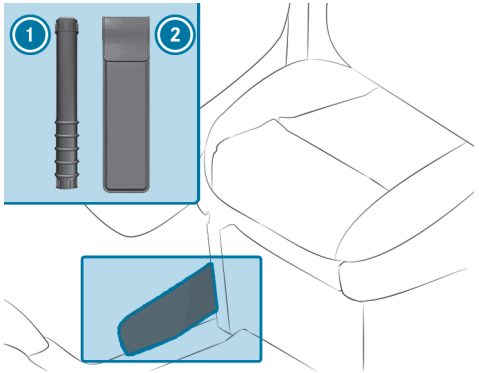

Fire extinguisher in the door stowage compartment of the front passenger door

1 Fire extinguisher
2 Bag

► Remove the fire extinguisher 1 from the bag 2 and stow it back in the same place.

Emergency hammer

WARNING
Risk of injury if the emergency hammer is used

If you smash the windows with the emergency hammer, you may injure yourself:

- due to glass splinters flying around
- on glass splinters lying around
- on pieces of glass that remain in the window seal

► It is essential to protect skin and eyes, e.g. with an item of clothing.

► Be particularly careful when leaving the vehicle through a smashed window.

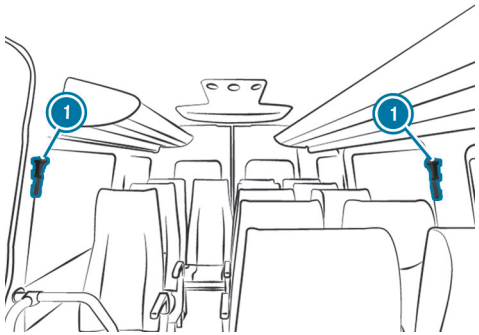

Position of the emergency hammers

An emergency exit window in the passenger compartment is equipped with an emergency hammer (1). The emergency hammer (1) will be located at either the right or left emergency exit window and marked with a label.

In case of danger, remove the emergency hammer (1) from the holder and smash the windows.

ONCE THE WINDOWS HAVE BEEN SMASHED:

- the passengers in the vehicle can leave via the windows;
- helpers can gain access to the passenger compartment from outside via the windows.

When leaving the vehicle through the windows, be aware of the vehicle height and local conditions. Provide particular assistance to children and people of shorter stature as they leave the vehicle.

Mercedes-Benz emergency call system

Information on the Mercedes-Benz emergency call system

The Mercedes-Benz emergency call system only functions in areas where mobile phone coverage is available from the relevant contract partner. Insufficient network coverage from the relevant contract partner may result in an emergency call not being transmitted.

The vehicle must be switched on before an automatic emergency call can be made.

The Mercedes-Benz emergency call system is available for your vehicle for 10 years ex works.

Overview of the Mercedes-Benz emergency call system

The Mercedes-Benz emergency call system can help to decisively reduce the time between an accident and the arrival of emergency services at the site of the accident. It helps locate an accident site in places that are difficult to access.

The emergency call can be triggered automatically (→ page 635).

You also have the option of triggering the emergency call manually (→ page 635). Only make emergency calls if you or others are in need of rescue. Do not make an emergency call in the event of a breakdown or a similar situation.

MESSAGE IN THE MEDIA DISPLAY:
SOS NOT READY: the vehicle is not switched on or the emergency call system is malfunctioning.

This does not necessarily indicate a total failure of the emergency call system. Emergency calls can still be transmitted.

The display refers only to the vehicle and does not take account of the availability of mobile phone networks and the Mercedes-Benz emergency call centre.

The functional readiness of the emergency call system on the vehicle can be seen when the SOS NOT READY display disappears once the vehicle is switched on.

During an active emergency call, SOS appears in the display.

You can find more information on the regional availability of the Mercedes-Benz emergency call system at: https://www.mercedes-benz-mobile.com/extra/ecall/

ⓘ If there is a malfunction of the emergency call system, the speakers, microphone, airbag or the SOS button, for example, are faulty.

YOU CAN RECOGNISE A FAULT IN THE EMERGENCY CALL SYSTEM BY THE FOLLOWING DISPLAYS:

- The red SOS NOT READY message appears in the display of the instrument cluster or in the media display.
- The SOS button lights up red continuously.

Triggering an automatic Mercedes-Benz emergency call

Requirements:

- The vehicle is switched on.
- The starter battery is sufficiently charged.

The Mercedes-Benz emergency call system automatically initiates an emergency call after restraint systems such as an airbag or seat belt tensioner is triggered in an accident.

WHEN THE EMERGENCY CALL IS MADE:

- A voice connection is made to the Mercedes-Benz emergency call centre.
- A message with accident data is transmitted to the Mercedes-Benz emergency call centre.

  The Mercedes-Benz emergency call centre can transmit the vehicle position data to one of the public emergency services call centres.
- Under certain circumstances data is also transmitted in the voice channel to the Mercedes-Benz emergency call centre.

  This allows measures for rescue, recovery or towing to a Mercedes-Benz Service Centre to be initiated quickly.

The SOS button in the overhead control panel flashes until the emergency call is finished.

It is not possible to immediately end an automatic emergency call.

If the Mercedes-Benz emergency call system cannot connect to the Mercedes-Benz emergency call centre, the emergency call is automatically sent to the public emergency services call centre.

If no connection can be made to the public emergency services, a corresponding message appears in the display.

► Dial the emergency number **112** on your mobile phone.

IF AN EMERGENCY CALL HAS BEEN INITIATED:

- Remain in the vehicle if the road and traffic conditions permit you to do so until a voice connection is established with the emergency call centre operator.
- Based on the call, the operator decides whether it is necessary to call rescue teams and/or the police to the accident site.
- If no vehicle occupant answers, an ambulance is sent to the vehicle immediately.

Triggering a manual Mercedes-Benz emergency call

► **Via the SOS button in the overhead control panel:** press the SOS button for at least one second (⟶ page 474).

► **Via voice control:** use the MBUX Voice Assistant voice command Call the Mercedes accident centre (⟶ page 470).

WHEN THE EMERGENCY CALL IS MADE:

- A voice connection is made to the Mercedes-Benz emergency call centre.
- A message with accident data is transmitted to the Mercedes-Benz emergency call centre.

  The Mercedes-Benz emergency call centre can transmit the vehicle position data to one of the public emergency services call centres.
- Remain in the vehicle if the road and traffic conditions permit you to do so until a voice connection is established with the emergency call centre operator.
- Based on the call, the operator decides whether it is necessary to call rescue teams and/or the police to the accident site.
- Under certain circumstances data is also transmitted in the voice channel to the Mercedes-Benz emergency call centre.

  This allows measures for rescue, recovery or towing to a Mercedes-Benz Service Centre to be initiated quickly.

If the Mercedes-Benz emergency call system cannot connect to the Mercedes-Benz emergency call centre, the emergency call is automatically sent to the public emergency services call centre.

If no connection can be made to the public emergency services, a corresponding message appears in the media display.

► Dial the emergency number **112** on your mobile phone.

ENDING AN UNINTENTIONAL MERCEDES-BENZ EMERGENCY CALL

► Select ☎ on the multifunction steering wheel.

Transmitted data Mercedes-Benz with the Mercedes-Benz emergency call

In the event of an automatic or manual emergency call, data will be transferred to the Mercedes-Benz emergency call centre or to the public emergency services call centre.

THE FOLLOWING DATA IS TRANSMITTED:

- Vehicle's GPS position data
- GPS position data on the route (a few 100 m before the incident)
- Direction of travel
- Vehicle identification number
- Vehicle drive type
- Estimated number of people in the vehicle

  The detection is based on the number of closed seat belt buckles on the front seats.
- Whether the emergency call was initiated manually or automatically
- Time of the accident
- Language setting on the multimedia system
- Digital Extras available or not

  This determines whether the call can be forwarded to Mercedes-Benz Support if required.

ⓘ Public emergency services call centres may not have access to the full range of technical equipment required to process the transmitted data.

FOR ACCIDENT CLARIFICATION PURPOSES, THE FOLLOWING MEASURES CAN BE TAKEN UP TO AN HOUR AFTER THE EMERGENCY CALL HAS BEEN INITIATED:

- The current vehicle position can be called up.
- A voice connection to the vehicle occupants can be established.

Function of the emergency call system self-diagnosis

Your car verifies the operability of the emergency call system each time the ignition is ON.

IN THE EVENT OF A SYSTEM MALFUNCTION, YOU WILL BE INFORMED BY THE FOLLOWING SIGNALS:

- The SOS NOT READY message in the instrument cluster display or the red SOS NOT READY message on the media display, if available
- The flashing indicator lamp in the overhead control panel

Please, make sure, that during 30 seconds after switching ignition ON the red indicator SOS NOT READY in the upper right corner of the multimedia display is switched OFF, this means the emergency call system passed diagnostics successfully.

Flat tyre

Notes on flat tyres

WARNING
Risk of accident due to a flat tyre

A flat tyre strongly impairs the vehicle's driving characteristics, as well as its steering and braking characteristics.

- Do not drive with a flat tyre.
- Replace the flat tyre with the spare wheel. Alternatively, consult a qualified specialist workshop.

IN THE EVENT OF A FLAT TYRE, THE FOLLOWING OPTIONS ARE AVAILABLE DEPENDING ON YOUR VEHICLE'S EQUIPMENT:

- You can make a breakdown assistance call using the breakdown assistance call button in the overhead control panel (⟶ page 474).
- Change the wheel (⟶ page 688).

Battery

Notes on the starter battery

WARNING
Risk of a fire due to work carried out incorrectly on the battery

The battery clamps may be live even after they have been disconnected. This can result in a short circuit.

- ► Always have work on the batteries carried out at a qualified specialist workshop.
- ► Never disconnect the battery yourself.

WARNING
Risk of an accident due to work carried out incorrectly on the battery

Work carried out incorrectly on the battery can, for example, lead to a short circuit. This can restrict functions relevant for safety systems and impair the operating safety of your vehicle.

YOU COULD LOSE CONTROL OF THE VEHICLE IN THE FOLLOWING SITUATIONS IN PARTICULAR:

- when braking
- in the event of abrupt steering manoeuvres and/or when the vehicle's speed is not adapted to the road conditions

- ► In the event of a short circuit or a similar incident, contact a qualified specialist workshop immediately.
- ► Do not drive on.
- ► Always have work on the battery carried out at a qualified specialist workshop.

- Further information on ABS (⟶ page 374)
- Further information on ESP®(⟶ page 375)

Mercedes-Benz recommends that you have the starter battery replaced at a qualified specialist workshop, e.g. a Mercedes-Benz Service Centre.

IF YOU WANT TO REPLACE THE BATTERY YOURSELF, OBSERVE THE FOLLOWING INFORMATION:

- Only replace a faulty battery with a battery which fulfils the vehicle's specific requirements.
- Take detachable parts such as the vent hose or terminal cover from the battery which is to be replaced.
- Make sure that the vent hose is always connected to its original opening on the battery side.

  Fit the existing or newly supplied stop plugs.

  Otherwise, gases or battery acid could escape.
- Make sure that the detachable parts are connected in the same way as before.

For safety reasons, Mercedes-Benz recommends that you only use batteries which have been approved for your vehicle by Mercedes-Benz. These batteries provide increased impact protection to prevent vehicle occupants from suffering acid burns should the battery be damaged in an accident.

WARNING
Risk of explosion due to electrostatic charge

Electrostatic charge can ignite the highly explosive gas mixture in the battery.

► To discharge any electrostatic charge that may have built up, touch the metal vehicle body before handling the battery.

The highly flammable gas mixture is created while the battery is charging and when jump-starting.

WARNING
Danger of chemical burns from the battery acid

Battery acid is caustic.

► Avoid contact with the skin, eyes or clothing.

► Do not lean over the battery.

► Do not inhale battery gases.

► Keep children away from the battery.

► Immediately rinse battery acid off thoroughly with plenty of clean water and seek medical attention immediately.

ENVIRONMENTAL NOTE
Environmental damage due to improper disposal of batteries

Batteries contain pollutants. It is illegal to dispose of them with the household rubbish.

► Dispose of batteries in an environmentally responsible manner. Take discharged batteries to a qualified specialist workshop or to a collection point for used batteries.

Consult a qualified specialist workshop to connect the battery.

Observe the safety notes and protective measures when handling batteries.

Risk of explosion

Fire, open flames and smoking are prohibited when handling the battery. Avoid creating sparks.

Electrolyte or battery acid is corrosive. Avoid contact with the skin, eyes and clothing. Wear suitable protective clothing, in particular gloves, an apron and a safety mask. Immediately rinse electrolyte acid splashes off with clean water. If necessary, seek medical advice.

Wear eye protection.

Keep children at a safe distance.

Observe this Owner's Manual.

IF YOU DO NOT USE THE VEHICLE FOR A LONG PERIOD OR DRIVE SHORT DISTANCES REGULARLY:

- Connect the battery to a charger recommended for Mercedes-Benz
- Consult a qualified specialist workshop (⟶ page 330) to disconnect the battery

Starting assistance and charging the starter battery

► Always use the jump-start connection in the engine compartment for starting assistance and when charging the battery.

NOTICE
Damage to the battery due to overvoltage

When charging using a battery charger without a maximum charging voltage, the battery or the on-board electronics may be damaged.

► Only use battery chargers with a maximum charging voltage of 14.8 V.

NOTE
Damage to the exhaust system due to prolonged idling operation to charge the battery

Prolonged idling operation can lead to irreparable damage to the exhaust system components.

► Do not charge the battery by leaving it idling for long periods.

WARNING
Risk of explosion due to the ignition of hydrogen gas

If there is a short circuit or sparks are created, there is a danger of hydrogen gas igniting when you charge the battery.

- Take care that the positive terminal of a connected battery does not come into contact with vehicle parts.
- Never place metal objects or tools on a battery.
- When connecting and disconnecting the battery, always observe the sequence of battery terminals described.
- During starting assistance, always take care to connect only battery terminals of identical polarity.
- During starting assistance, observe the sequence described for connecting and disconnecting the jump leads.
- Do not connect or disconnect the battery terminals with the engine running.

WARNING
Risk of explosion due to explosive mixture of gases

An explosive mixture of gases can escape from the battery during charging and starting assistance.

- Fire, naked flames, smoking and creating sparks must be avoided.
- Make sure there is adequate ventilation.
- Do not stand over the battery.

WARNING
Risk of explosion from a frozen battery

A discharged battery may freeze at temperatures slightly above or below freezing point.

During starting assistance or battery charging, battery gas can be released.

- Always allow a battery to thaw before charging it or performing starting assistance.

If the warning/indicator lamps do not light up in the instrument cluster at temperatures around or below freezing, it is highly probable that the discharged battery has frozen.

IN THIS CASE, OBSERVE THE FOLLOWING POINTS:

- Do not give the vehicle starting assistance or charge the battery.

- The service life of a battery that has been thawed may be reduced drastically.
- The starting behaviour may deteriorate, particularly at low temperatures.
- It is recommended that you have a thawed battery checked at a qualified specialist workshop.

NOTE
Damage caused by numerous or extended attempts to start the engine

Numerous or extended attempts to start the engine may damage the catalytic converter due to non-combusted fuel.

► Avoid numerous and extended attempts to start the engine.

WHEN JUMP-STARTING AND CHARGING THE BATTERIES, OBSERVE THE FOLLOWING POINTS:

- Only use undamaged jump leads/charging cables with a sufficient cross-section and insulated terminal clamps.
- Non-insulated parts of the terminal clamps must not come into contact with other metal parts while the jump leads/charging cables are connected to the battery/jump-start connection point.
- The jump leads/charging cables must not come into contact with any parts which may move when the engine is running.
- Make sure that neither you nor the battery is electrostatically charged.
- Avoid fire and naked flames.
- Do not lean over a battery.
- **When charging:** only use a battery charger that has been tested and approved by Mercedes-Benz and read the operating instructions for your charger before charging the batteries.

OBSERVE THE ADDITIONAL FOLLOWING POINTS DURING STARTING ASSISTANCE:

- Starting assistance may only be provided using batteries with a nominal voltage of 12 V.
- The vehicles must not touch each other.

► **Vehicles with a battery main switch:** check whether the battery main switch is inserted(⟶ page 330).

► Use the parking brake to secure the vehicle.

► **Vehicles with automatic transmission:** shift the transmission to position P.

► **Vehicles with manual transmission:** shift to neutral.

► Shift to neutral.

► Switch off the vehicle and all electrical consumers.

► Open the bonnet (⟶ page 606).

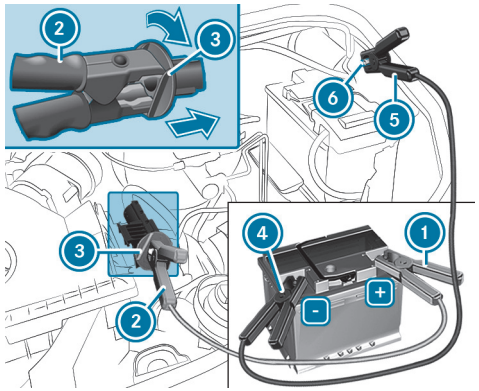

ⓘ **Right-hand drive vehicle:** the jump-start connection may be on the opposite side.

- Remove the cover from the POSITIVE terminal of the donor battery.
- First connect red POSITIVE terminal clamp ① from the starting assistance/charging cable to the POSITIVE terminal of the donor battery.
- Using second red POSITIVE terminal clamp ② of the starting assistance/charging cable, slide red cover cap on jump-start connection ③ back with a clockwise turn.
- Attach second red POSITIVE terminal clamp ② to the POSITIVE terminal of jump-start connection ③.
- **For starting assistance:** start the engine of the donor vehicle and let it run at idle speed.
- First connect black NEGATIVE terminal clamp ④ of the starting assistance/charging cable to the NEGATIVE terminal of the donor battery.
- Connect second black NEGATIVE terminal clamp ⑤ of the starting assistance/charging cable to earth point ⑥ on your own vehicle (bare metal part in the engine compartment).
- **For starting assistance:** start the vehicle.
- **For charging:** start the charging process.
- **For starting assistance:** let the engine run for a few minutes.
- **For starting assistance:** before disconnecting the jump lead, switch on an electrical consumer on your own vehicle, e.g. the rear window heater or lighting.

When the starting assistance/charging process is complete:

- Remove the terminal clamps of the starting assistance/charging cable in reverse order. First remove second black NEGATIVE terminal clamp ⑤ from earth point ⑥ in the engine compartment. Then remove black NEGATIVE terminal clamp ④ from the donor battery. Then remove second red POSITIVE terminal clamp ② from the POSITIVE terminal of jump-start connection ③. Then remove red POSITIVE terminal clamp ① from the donor battery.

  The red cover cap springs back to its initial position when second red POSITIVE terminal clamp ② is disconnected from jump-start connection ③.

You can obtain further information at a qualified specialist workshop.

Installing and removing the floor covering

WARNING
Risk of accident due to objects in the driver's footwell

Objects in the driver's footwell may restrict the pedal travel or block a depressed pedal.

This jeopardises the operating- and road safety of the vehicle.

- Safely stow all objects in the vehicle so that they cannot enter the driver's footwell.
- Always ensure sufficient clearance for the pedals.
- Ensure that floor mats and carpets are securely attached.
- Do not place several floor mats or carpets on top of one another.

Requirements:

- All electrical consumers are switched off.

REMOVING

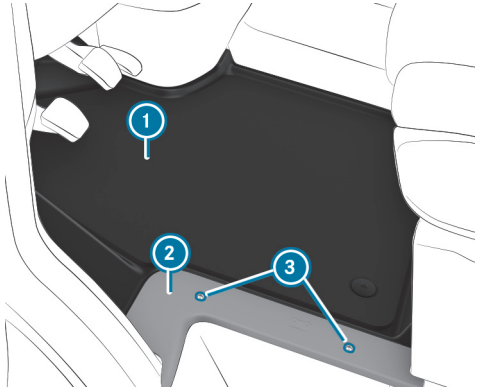

- Unscrew screws 3 and remove trim 2.
- Remove floor covering 1.

INSTALLING

- Insert floor covering 1 and align it at the base of the driver's seat and at the door sill.
- Put trim 2 in place and screw screws 3 back in.

Disconnecting the starter battery

NOTE
Damage to electrical major assembly due to disconnecting incorrectly

Electrical major assemblies could be damaged if the starter battery is disconnected while the vehicle is running.

- Switch off the vehicle. Then, release the battery clamps of the starter battery.
- Always disconnect the starter battery in the battery case in the left footwell first. Otherwise, electrical major assemblies, e.g. the alternator, could be damaged.

NOTE
Damage to the on-board electronics due to disconnecting incorrectly

If the starter battery is not disconnected as described below, the on-board electronics may be damaged.

- Always disconnect the starter battery as described in the following sequence. Never reverse the battery terminals. Otherwise the on-board electronics may be damaged.

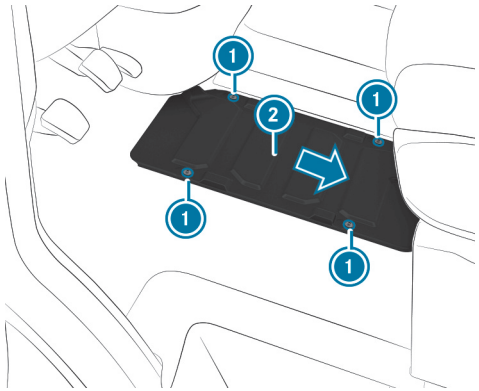

If the vehicle is expected to be parked or laid up for more than 4 weeks, observe the notes on laying up the vehicle (→ page 369) and on standby mode (→ page 370).

- **Vehicles with a battery main switch:** remove the main switch of the battery (→ page 331).
- **Vehicles without a battery main switch:** switch off all electrical consumers.
- Switch off the vehicle.
- Remove the floor covering (→ page 645).
- Remove screws (1) and slide battery cover (2) in the direction of the arrow.
  The screws must protrude over the larger recesses.
- Remove battery cover (2) upwards.

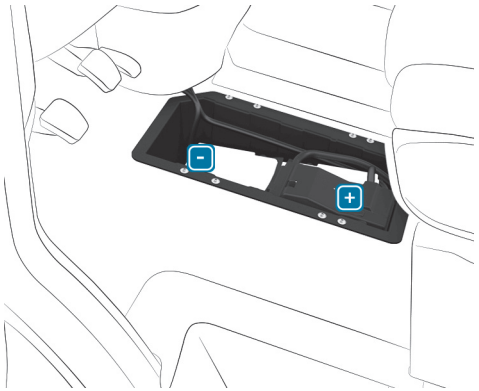

- First loosen and remove the NEGATIVE terminal clamp on the battery so that the clamp is no longer in contact with the terminal.
- Remove the clamp cover of the POSITIVE terminal.
- Loosen the POSITIVE terminal clamp and fold it up to the side, together with the prefuse box.

Removing/fitting the starter battery

VEHICLES WITH REAR WHEEL DRIVE: REMOVING THE STARTER BATTERY

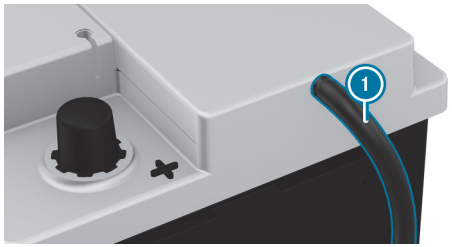

- Disconnect the starter battery (⟶ page 646).
- Remove breather hose 1 with the connector bracket from the connection on the degassing cover.

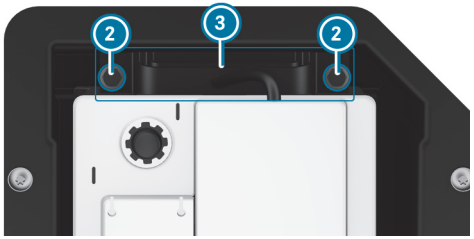

- Pull out and remove screws 2 of bracket 3 upwards.
- Slide the starter battery from its anchorage in the direction of travel.
- Fold the bars of the starter battery upwards and remove the starter battery from the battery box.

VEHICLES WITH REAR WHEEL DRIVE: FITTING THE STARTER BATTERY

- When reconnecting the starter battery, observe the safety measures and protection notes (⟶ page 65).

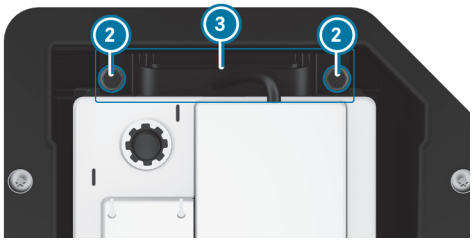

- Insert the starter battery into the battery box.
- Fold down the bars of the starter battery.

- Slide the starter battery into its anchorage in the opposite direction to the direction of travel.
- Insert bracket ③.
- Tighten screws ② on bracket ③ which holds the battery in place.

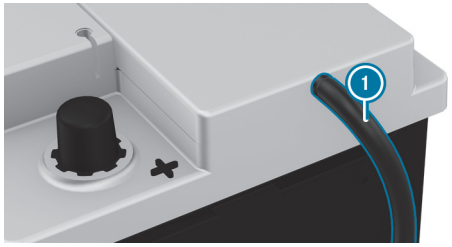

- Attach breather hose ① with the connector bracket to the connection of the ventilation cover.
- Reconnect the starter battery (→ page 646).

Mercedes-Benz recommends that you have the starter battery replaced at a qualified specialist workshop, e.g. a Mercedes-Benz Service Centre.

IF YOU WANT TO REPLACE THE STARTER BATTERY YOURSELF, OBSERVE THE FOLLOWING NOTES:

- Replace a defective starter battery with a starter battery which meets the specific requirements of the vehicle.
- Use detachable parts such as vent hoses, elbow fittings or terminal covers from the starter battery which is to be replaced.
- Make sure that the vent hose is always connected to its original opening on the battery side.

  Fit the existing or newly supplied stop plugs.

  Otherwise, gases or battery acid could escape.
- Make sure that the detachable parts are connected in the same way as before.

VEHICLES WITH FRONT WHEEL DRIVE: REMOVING THE STARTER BATTERY

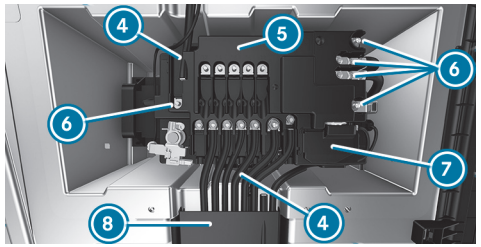

- Disconnect the starter battery (→ page 646).
- Open the flap on cable duct ⑧.
- Open the cover of positive terminal ⑦.

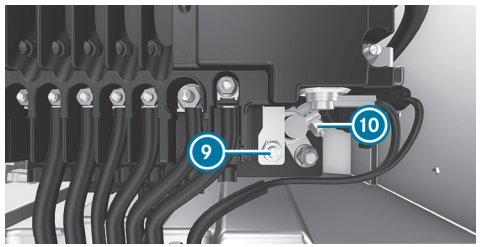

- Release nut ⑨ and positive terminal ⑩.
- Unscrew the nuts of wires ⑥, remove the wires and put them aside.
- Spread out catch tabs ④ on prefuse box ⑤.
- Lift prefuse box ⑤ off the battery and slide it towards the front right.

- Fold prefuse box (5) upwards and to the rear.

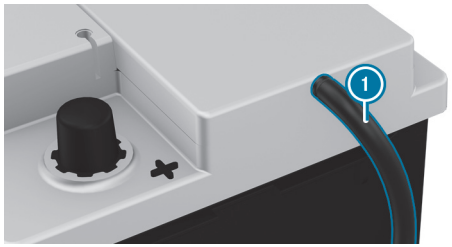

- Remove breather hose (1) with the connector bracket from the connection on the degassing cover.

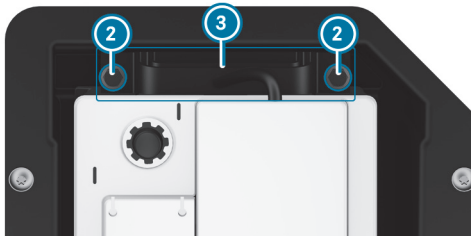

- Unscrew screws (2) of bracket (3) and pull the bracket out upwards.
- Slide the starter battery from its anchorage across the direction of travel.
- Fold the bars of the starter battery upwards and lift the starter battery out of the battery box.

VEHICLES WITH FRONT WHEEL DRIVE: FITTING THE STARTER BATTERY

- When reconnecting the starter battery, observe the safety measures and protection notes (→ page 65).
- Insert the starter battery into the battery box.

ⓘ Take care that no wires are trapped.

- Fold down the bars of the starter battery.
- Slide the starter battery into its anchorage across the direction of travel.

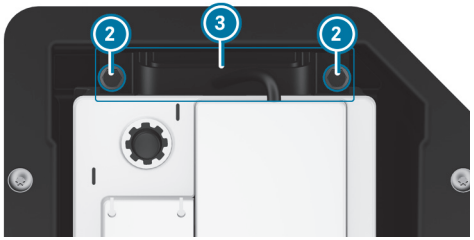

- Insert bracket (3).
- Tighten screws (2) on bracket (3) which holds the battery in place.

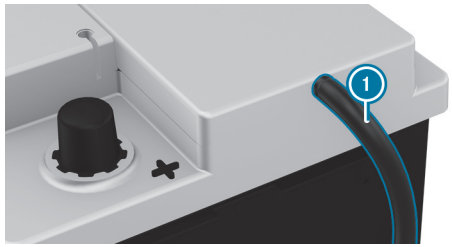

- Attach breather hose (1) with the connector bracket to the connection of the ventilation cover.
- Place the prefuse box on the battery.

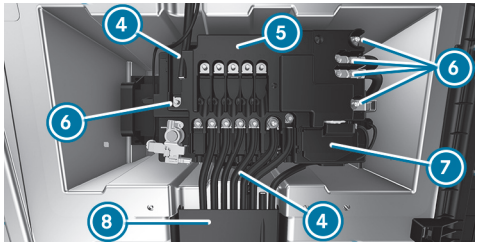

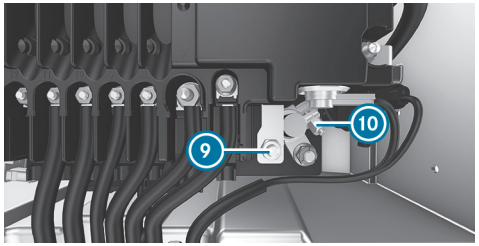

- Connect positive terminal (10) and close cover (7).
- Place the wires on the support bolt.
- Tighten the nuts for wires (6) with torque specified on prefuse box (5).

Mercedes-Benz recommends that you have the starter battery replaced at a qualified specialist workshop, e.g. a Mercedes-Benz Service Centre.

IF YOU WANT TO REPLACE THE STARTER BATTERY YOURSELF, OBSERVE THE FOLLOWING NOTES:

- Replace a defective starter battery with a starter battery which meets the specific requirements of the vehicle.
- Use detachable parts such as vent hoses, elbow fittings or terminal covers from the starter battery which is to be replaced.
- Make sure that the vent hose is always connected to its original opening on the battery side.

  Fit the existing or newly supplied stop plugs.

  Otherwise, gases or battery acid could escape.
- Make sure that the detachable parts are connected in the same way as before.

Disconnecting the auxiliary battery in the engine compartment

NOTE
Damage to electrical major assembly due to disconnecting incorrectly

Electrical major assemblies could be damaged if the starter battery is disconnected while the vehicle is running.

- Switch off the vehicle. Then, release the battery clamps of the starter battery.
- Always disconnect the starter battery in the battery case in the left footwell first. Otherwise, electrical major assemblies, e.g. the alternator, could be damaged.

NOTE
Damage to the vehicle's electronics

Incorrectly disconnecting the auxiliary battery can cause damage to the vehicle's electronics.

- Always disconnect the auxiliary battery as described in the following sequence. Do not reverse the battery terminals under any circumstances.

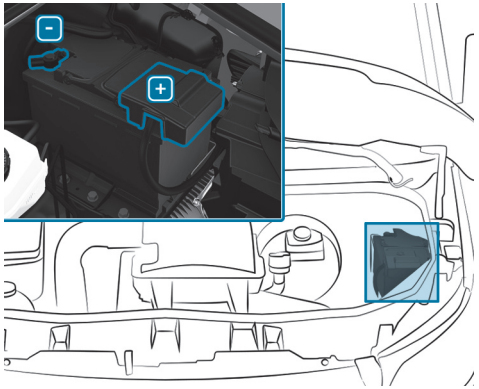

- Observe the safety measures and protection notices when disconnecting the auxiliary battery (→ page 65).
- Switch off all electrical consumers.
- Switch off the vehicle.
- Open the bonnet (→ page 606).
- First loosen and remove the negative terminal clamp on the auxiliary battery so that the clamp is no longer in contact with the terminal.
- Remove the positive terminal clamp cover.
- Loosen and remove the positive terminal clamp.

Disconnecting the auxiliary battery under the front passenger bench seat

NOTE
Damage to electrical major assembly due to disconnecting incorrectly

Electrical major assemblies could be damaged if the starter battery is disconnected while the vehicle is running.

- Switch off the vehicle. Then, release the battery clamps of the starter battery.
- Always disconnect the starter battery in the battery case in the left footwell first. Otherwise, electrical major assemblies, e.g. the alternator, could be damaged.

NOTE
Damage to the vehicle's electronics

Incorrectly disconnecting the auxiliary battery can cause damage to the vehicle's electronics.

- Always disconnect the auxiliary battery as described in the following sequence. Do not reverse the battery terminals under any circumstances.

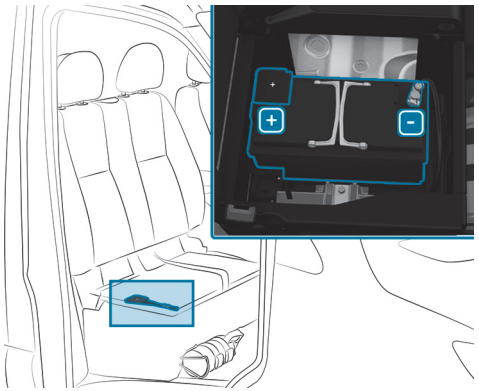

- Observe the safety measures and protection notices when disconnecting the auxiliary battery (⟶ page 65).
- Switch off all electrical consumers.
- Switch off the vehicle.
- Fold the front passenger bench seat cushion up (⟶ page 225).
- First loosen and remove the negative clamp on the auxiliary battery so that the clamp is no longer in contact with the terminal.
- Remove the cover over the positive clamp.
- Loosen and remove the positive clamp.

ⓘ If the auxiliary battery is located under a front passenger seat without a cushion that can be folded up, contact a qualified specialist workshop to disconnect and remove the auxiliary battery.

Towing or tow-starting

Permissible towing methods

In the event of a breakdown, Mercedes-Benz recommends that you have the vehicle transported instead of towed.

NOTE
Damage to the vehicle due to towing away incorrectly

- Observe the instructions and notes on towing away.

NOTE
Risk of damage when pushing the vehicle

When a vehicle which is not started, and has front wheel drive and automatic transmission, is pushed or pulled too far and too quickly, it can become damaged.

- Do not push the vehicle further than 15 m, and do not exceed walking pace.

Vehicles with automatic transmission and rear-wheel drive: if there is a malfunction, the automatic transmission may be locked in position P.
If the automatic transmission cannot be shifted to position N, transport the vehicle (→ page 659). A tow truck with lifting equipment is required to transport the vehicle.

Vehicles with automatic transmission and front-wheel drive: in the event of a malfunction, the automatic transmission may be locked in position P. You can release the parking lock manually (→ page 340).
If the automatic transmission cannot be shifted to position N, transport the vehicle (→ page 659). A tow truck with lifting equipment is required to transport the vehicle.

MANUAL TRANSMISSION

Both axles on the ground	Front axle raised	Rear axle raised
Yes, no further than 100 km at 50 km/h	Yes, no further than 100 km at 50 km/h	Yes, no further than 50 km at 50 km/h

AUTOMATIC TRANSMISSION AND REAR-WHEEL DRIVE

Both axles on the ground	Front axle raised	Rear axle raised
Yes, no further than 50 km at 50 km/h	Yes, no further than 50 km at 50 km/h	Yes, if the steering wheel is immobilised in the centre position with a steering wheel lock

AUTOMATIC TRANSMISSION AND FRONT-WHEEL DRIVE

Both axles on the ground	Front axle raised	Rear axle raised
No (when the vehicle has not been started) Yes (when the vehicle has been started), maximum 5 km at 20 km/h	Yes	No (when the vehicle has not been started) Yes (when the vehicle has been started), maximum 5 km at 20 km/h

ALL-WHEEL DRIVE

Both axles on the ground	Front axle raised	Rear axle raised
Yes, no further than 50 km at 50 km/h	No	No

Towing with a raised axle: towing should be done by a towing company.

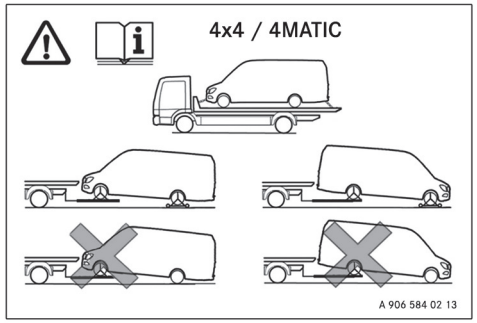

Vehicles with all-wheel drive: warning notice on the B-pillar on the driver's side

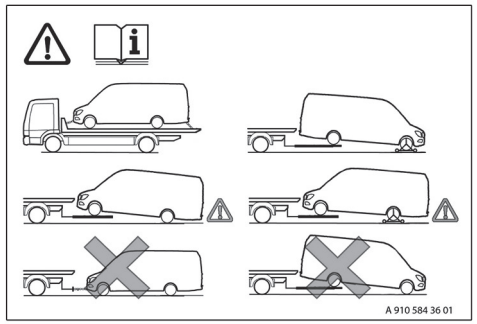

Vehicles with automatic transmission and front-wheel drive: warning notice on the B-pillar on the driver's side

Towing the vehicle with both axles on the ground

► Observe the notes on permissible towing methods (⟶ page 70).

► Make sure that the battery is connected and charged.

WHEN THE BATTERY IS DISCHARGED, THE FOLLOWING SITUATIONS OCCUR:

- The vehicle does not start.
- It is not possible to release or apply the electric parking brake.
- **Vehicles with automatic transmission:** the automatic transmission cannot be shifted to position N or P.

NOTE
Risk of damage when pushing the vehicle

When a vehicle which is not started, and has front wheel drive and automatic transmission, is pushed or pulled too far and too quickly, it can become damaged.

► Do not push the vehicle further than 15 m, and do not exceed walking pace.

NOTE
Damage due to towing away at excessively high speeds or over long distances

The drivetrain could be damaged when towing at excessively high speeds or over long distances.

► A towing speed of 50 km/h must not be exceeded.

► A towing distance of 50 km must not be exceeded.

Vehicles with automatic transmission and rear-wheel drive: if there is a malfunction, the automatic transmission may be locked in position P.
If the automatic transmission cannot be shifted to position N, transport the vehicle (→ page 659). A tow truck with lifting equipment is required to transport the vehicle.

Vehicles with automatic transmission and front-wheel drive: if there is a malfunction, the automatic transmission may be locked in position P. You can release the parking pawl manually (→ page 340).
If the automatic transmission cannot be shifted to position N, transport the vehicle (→ page 659). A tow truck with lifting equipment is required to transport the vehicle.

WARNING
Risk of accident when towing a vehicle which is too heavy

IF THE VEHICLE TO BE TOW-STARTED OR TOWED AWAY IS HEAVIER THAN THE PERMISSIBLE GROSS MASS OF YOUR VEHICLE, THE FOLLOWING SITUATIONS CAN OCCUR:

- the towing eye may become detached.
- the vehicle/trailer combination may swerve or overturn.

▶ Before tow-starting or towing away, check if the vehicle to be tow-started or towed away exceeds the permissible gross mass.

If a vehicle is towed or tow-started, its weight should not be greater than the permissible gross mass of the towing vehicle.

▶ Information on the vehicle's permissible gross mass can be found on the vehicle identification plate (→ page 739).

▶ **Vehicles with automatic transmission:** do not open the driver's or co-driver door. Otherwise, the automatic transmission automatically shifts to position P.

▶ Fit the towing eye (→ page 660).

▶ Secure the towing device.

NOTE
Damage due to incorrect connection of the tow bar

▶ Only connect the tow rope or tow bar to the towing eyes.

You can also secure the towing device to the trailer hitch.

NOTE
Damage and risk of accident when towing with a tow rope

There is a risk of an accident if you do not observe safety and protective measures when towing using a tow rope.

Observe the following points when towing with a tow rope:

- Secure the tow rope on the same side on both vehicles.
- Make sure the tow rope does not exceed the legally prescribed length.
- Mark the tow rope in the middle, e.g. with a white cloth (30 x 30 cm). This will make other road users aware that a vehicle is being towed.
- Observe the brake lamps of the towing vehicle while driving. Always maintain a distance that ensures the tow rope does not sag.
- Do not use steel cables or chains to tow your vehicle. Otherwise, you could damage the vehicle.

- Deactivate automatic locking (→ page 179).
- Do not activate the HOLD function.
- Deactivate tow-away protection (→ page 209).
- Deactivate Active Brake Assist (→ page 381).
- **Vehicles with automatic transmission:** Shift the automatic transmission to N.
- **Vehicles with manual transmission:** shift to neutral N.
- Shift N to neutral.
- Release the parking brake.
- **Vehicles with manual transmission:** switch on the vehicle. Otherwise, the steering wheel lock will engage.
- Switch on the vehicle. Otherwise, the steering wheel lock will engage.

WARNING
Risk of accident due to limited safety-related functions during the towing process

SAFETY-RELATED FUNCTIONS ARE LIMITED OR NO LONGER AVAILABLE IN THE FOLLOWING SITUATIONS:

- the vehicle is switched off.
- the brake system or power steering system is malfunctioning.
- the energy supply or the on-board electrical system is malfunctioning.

When your vehicle is towed away, significantly more effort may be required to steer and brake than is normally required.

- Use a tow bar.
- Make sure that the steering wheel can move freely before towing the vehicle away.

NOTE
Damage due to excessive tractive power

If you pull away sharply, the tractive power may be too high and the vehicles could be damaged.

- Pull away slowly and smoothly.

Towing a vehicle with the front or rear axle raised

NOTE
Damage if the vehicle is switched on

If you leave the vehicle switched on while towing it with the front or rear axle raised, an intervention by ESP® can damage the brake system.

- Switch off the vehicle.

NOTE
Damage due to incorrect removal or installation of the propeller shafts

When installing the propeller shafts, they can be damaged if you do not use new screws.

Always use new screws when installing the propeller shafts.

Only have the propeller shafts installed or removed by qualified, skilled personnel.

If the front axle is damaged, raise the vehicle at the front, and if the rear axle is damaged, raise the vehicle at the rear.

Vehicles with automatic transmission and rear-wheel drive: if there is a malfunction, the automatic transmission may be locked in position P.
If the automatic transmission cannot be shifted to position N, transport the vehicle (→ page 659). A tow truck with lifting equipment is required to transport the vehicle.

Vehicles with automatic transmission and front-wheel drive: if there is a malfunction, the automatic transmission may be locked in position P. You can release the parking pawl manually (→ page 340).
If the automatic transmission cannot be shifted to position N, transport the vehicle (→ page 659). A tow truck with lifting equipment is required to transport the vehicle.

- Observe the notes on permissible towing methods (→ page 70).
- Remove the propeller shafts to the drive axles if the maximum permissible towing distance is exceeded.
- Only have the propeller shafts installed or removed by qualified, trained personnel.
- **Vehicles with automatic transmission:** Shift the automatic transmission to N.
- **Vehicles with manual transmission:** shift to neutral N.

- Shift N to neutral.
- Release the parking brake.
- Switch off the vehicle.

Loading the vehicle for transport

- Observe the notes on permissible towing methods (→ page 70).
- Connect the towing device to the towing eye to load the vehicle.
- **Vehicles with automatic transmission:** shift the automatic transmission to position N.

> **Vehicles with automatic transmission:** in the event of damage to the electrics, the automatic transmission may be locked in position P. To shift to position N, provide the on-board electrical system with power (→ page 65).

- **Vehicles with manual transmission:** shift to neutral N.
- Shift N to neutral.
- Load up the vehicle.
- **Vehicles with automatic transmission:** shift the automatic transmission to position P.
- **Vehicles with manual transmissions:** engage first 1 or reverse R gear.
- Engage 1st 1 or reverse gear R.
- Use the parking brake to secure the vehicle against rolling away.
- Only secure the vehicle by the wheels.

VEHICLES WITH ALL-WHEEL DRIVE/VEHICLES WITH AUTOMATIC TRANSMISSION

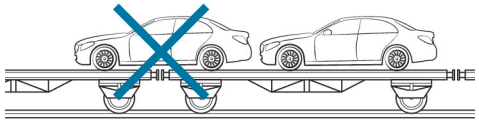

- Make sure that the front and rear axles come to rest on the same transportation vehicle.

> **NOTE**
> Damage to the drive train due to incorrect positioning of the vehicle
> - Do not position the vehicle above the connection point of the transport vehicle.

Towing eye storage location

The towing eye is located in the vehicle tool kit in the front passenger footwell (→ page 665).

Fitting/removing the towing eye

FITTING THE FRONT TOWING EYE

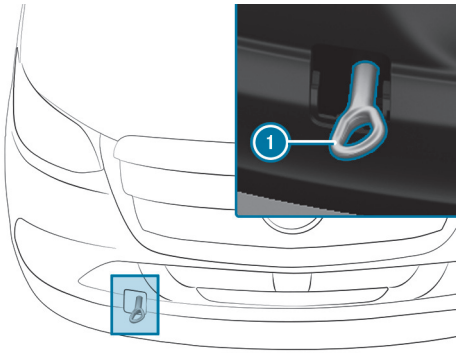

- Press on the top of the cover and remove the cover.
- Screw in the towing eye (1) clockwise as far as it will go and tighten.

REMOVING THE FRONT TOWING EYE

- Unscrew the towing eye (1) anti-clockwise.
- Insert the cover with the tabs at the top and push in at the bottom until the cover engages.

Rear towing eye

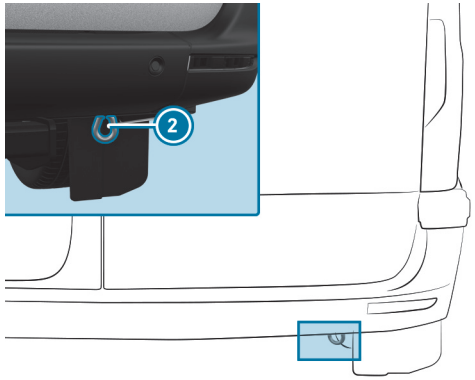

Rear towing eye (vehicles with passenger vehicle approval)

ⓘ The rear towing eye (2) is permanently attached to the vehicle.

NOTE
Damage to the vehicle as a result of incorrect use of the towing eye or trailer hitch

The vehicle may sustain damage if the towing eye is used to haul the vehicle out of a ditch during recovery.

- Use the towing eye exclusively for towing the vehicle.
- Never use the towing eye to haul the vehicle out of a ditch during recovery.

Tow-starting the vehicle

NOTE
Damage to the automatic transmission due to tow-starting

The automatic transmission may be damaged in the process of tow-starting vehicles with automatic transmission.

- Vehicles with automatic transmission must not be tow-started.

VEHICLES WITH MANUAL TRANSMISSION

- Please observe the notes on towing (⟶ page 70).
- If required, allow the engine and exhaust system to cool down.
- Switch on the vehicle.
- Shift to 2nd or 3rd gear.
- Release the parking brake.
- Keep the clutch pedal fully depressed when tow-starting the vehicle.
- Release the clutch pedal slowly.
- Immediately shift to neutral if the vehicle starts.
- Stop in accordance with the traffic conditions.
- Remove the towing device.
- Remove the towing eye.
- Have the vehicle checked at a qualified specialist workshop.
- Please observe the notes on towing (⟶ page 70).
- If required, allow the engine and exhaust system to cool down.
- Switch on the vehicle.
- Shift to 2nd or 3rd gear.
- Release the parking brake.
- Keep the clutch pedal fully depressed when tow-starting the vehicle.
- Release the clutch pedal slowly.
- Immediately shift to neutral if the vehicle starts.
- Stop in accordance with the traffic conditions.
- Remove the towing device.
- Remove the towing eye.
- Have the vehicle checked at a qualified specialist workshop.

Electrical fuses

Notes on electrical fuses

WARNING
Risk of accident and injury due to overloaded lines

If you manipulate or bridge a faulty fuse or if you replace it with a fuse with a higher amperage, the electric line could be overloaded.

This could result in a fire.

► Always replace faulty fuses with specified new fuses containing the correct amperage.

NOTE
Damage due to incorrect fuses

Electrical components or systems could be damaged by incorrect fuses.

► Only use fuses which have been approved by Mercedes-Benz and which have the correct fuse rating.

The electrical fuses in your vehicle isolate defective circuits. If a fuse blows, all the components on the circuit and their functions will cease to operate.

Blown fuses must be replaced with fuses of an equivalent specification, which you can determine by the colour and fuse rating. The fuse allocation chart and further information on the electric fuses and relays can be found in the "Fuse allocation chart" supplement.

NOTE
Damage or malfunctions caused by moisture

Moisture may cause damage to the electrical system or cause it to malfunction.

► When the fuse box is open, make sure that no moisture can enter the fuse box.

► When closing the fuse box, make sure that the seal of the lid is positioned correctly on the fuse box.

If the new fuse which has been inserted also blows, have the cause traced and rectified at a qualified specialist workshop.

MAKE SURE OF THE FOLLOWING BEFORE REPLACING A FUSE:

- The vehicle is secured such that it does not roll away.
- All electrical consumers are switched off.
- The vehicle is switched off.

THE FUSES ARE LOCATED IN VARIOUS FUSE BOXES:

- Fuse box in the co-driver footwell (⟶ page 663)

- Fuse box in the seat base of the driver's seat (⟶ page 663)

Opening the fuse box in the seat base of the driver's seat

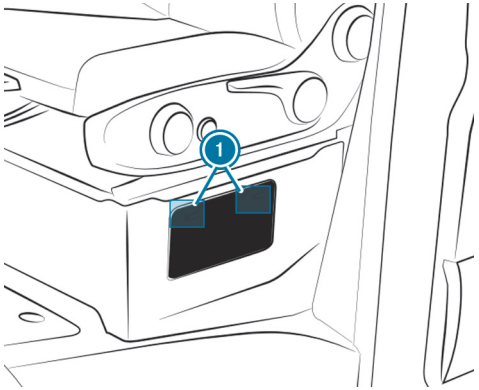

- **To open:** press down and unclip fasteners (1) on the cover.
- Remove the cover.

Opening and closing the fuse box in the front passenger's footwell

OPENING THE FUSE BOX

The fuse box is under the vehicle toolkit in the stowage compartment of the front passenger's footwell.

- Unlocking and removing the stowage compartment cover in the front passenger's footwell (⟶ page 664).

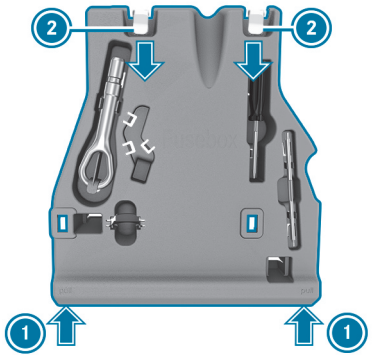

Example: vehicle tool kit insert

- Lift the insert at marked positions (1).
- Pull the insert out of clips (2).

CLOSING THE FUSE BOX

- Slide the insert into clips (2).
- Close the insert by pressing on marked positions (1).
- Position the stowage compartment cover in the front passenger's footwell and lock it (⟶ page 664).

Vehicle tool kit

Information on the vehicle tool kit

The vehicle tool kit is located in the stowage compartment in the footwell on the front passenger side (→ page 664).

THE VEHICLE TOOL KIT CONTAINS:

- a towing eye
- a screwdriver with Torx®, Phillips and slotted heads

THE VEHICLE TOOL KIT MAY ALSO CONTAIN THE FOLLOWING, FOR EXAMPLE:

- an open-ended spanner
- a wheel spanner
- a release tool for the parking pawl
- an insert bit
- a socket wrench
- tool for unlocking the lockable AdBlue® filler cap

Unlocking and removing the stowage compartment cover

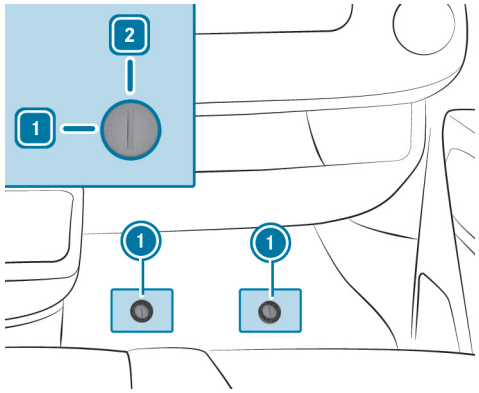

- Remove the rubber mat from the co-driver's footwell.
- **To unlock:** turn quick-release fastener (1) anti-clockwise to position [1].
- Slightly raise and pull out the cover.

INSERTING AND LOCKING THE COVER

- Slide in the cover and press it downwards.
- Press down quick-release fastener (1) until it engages.
- **To lock:** turn quick-release fastener (1) clockwise to position [2].

Removing the vehicle tool kit

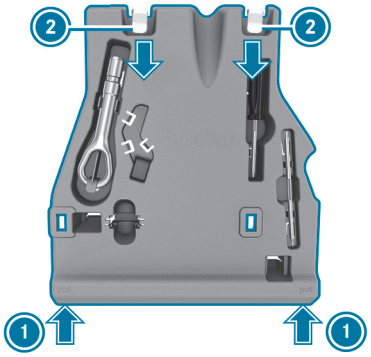

Example: vehicle tool kit insert

- Lift the insert at marked positions 1.
- Pull the insert out of clips 2.

STORING THE VEHICLE TOOL KIT

- Slide the insert into clips 2.
- Close the insert by pressing on marked positions 1.

Hydraulic jack

Information on the hydraulic jack

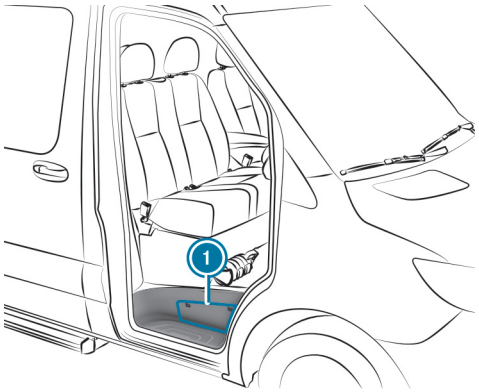

The hydraulic jack is located in side compartment 1 above the co-driver door step.

Vehicles with more than 18 seats

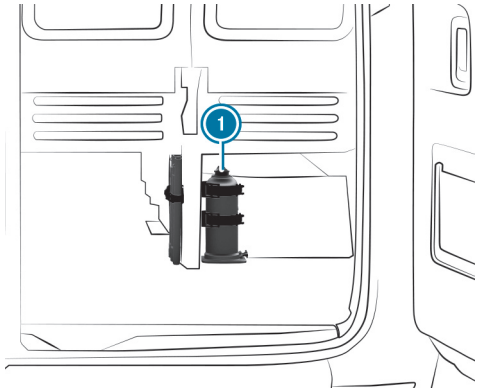

Hydraulic jack 1 is located behind the last bench seat on the right.

The jack has a maximum weight of 7.5 kg depending on the vehicle's equipment. You will find the maximum load capacity of the jack stated on the adhesive label attached to the jack. If there is a malfunction, please contact a qualified specialist workshop.

JACK MAINTENANCE:

- Clean and grease all moving parts after use.
- Extend and retract the pistons fully every six months.

Removing the pump lever rod and the jack

Requirements:

- The co-driver door is open.

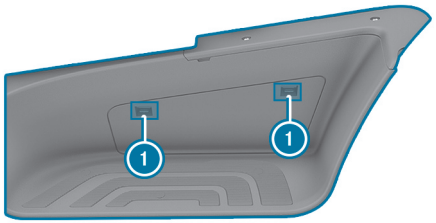

- **To open:** press down and unclip fasteners (1) on the cover.
- Remove the cover.
- Pull out the holder completely and place it on the step.

- Remove jack (2) and the pump lever rod.
- **To close:** press the cover firmly so that fasteners (1) engage.

VEHICLES WITH MORE THAN 18 SEATS
Requirement:

- The right-hand rear-end door is open.

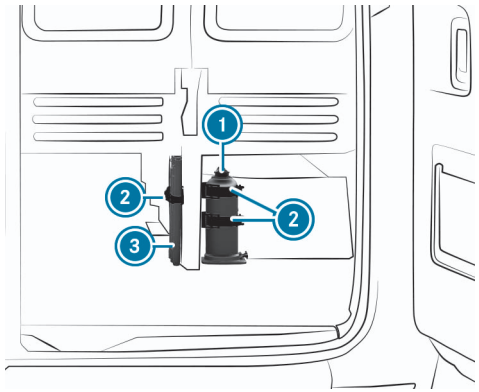

- Open clasps (2) on jack (1), loosen the straps and remove the jack.

- Open clasp (2) on pump lever rod (3), loosen the straps and remove the pump lever rod.
- **To stow:** collapse pump lever rod (3) and place it along with jack (1) in the loosened straps, and tighten clasps (2) to close.

Wheels and tyres

This interactive PDF works like a website – tap or click a button to jump straight to where you want to go.
You can return here at any time via the navigation bar at the top left.

Information on noise or unusual driving characteristics
Notes on regularly inspecting wheels and tyres
Information on driving with summer tyres
Information on M+S tyres
Notes on snow chains
Tyre pressure
Changing a wheel
Spare wheel

Information on noise or unusual driving characteristics

While driving, pay attention to vibrations, noises and unusual driving characteristics, e.g. pulling to one side. This may indicate damage to the wheels or tyres. If you suspect that a tyre is defective, reduce your speed. Stop the vehicle as soon as possible to check if wheels and tyres have been damaged or are no longer functioning properly. Hidden tyre damage could also be causing the unusual driving characteristics. If no signs of damage can be detected, have the tyres and wheels checked at a qualified specialist workshop.

Notes on regularly inspecting wheels and tyres

WARNING
Risk of injury due to damaged tyres

Damaged tyres can cause tyre pressure loss.

► Check the tyres regularly for signs of damage and replace any damaged tyres immediately.

Check the wheels and tyres of your vehicle for damage regularly, i.e. at least every two weeks, as well as after driving off-road or on rough roads. Damaged wheels can lead to a loss of tyre pressure.

LOOK OUT FOR THE FOLLOWING TYPES OF DAMAGE, FOREXAMPLE:

- cuts in the tyres
- punctures in the tyres
- tears in the tyres
- bulges on tyres
- deformation or severe corrosion on wheels

WARNING
Risk of aquaplaning due to insufficient tyre tread

Insufficient tyre tread will result in reduced tyre grip. There is a risk of an accident.

On a wet road surface the risk of aquaplaning is increased, in particular where speed is not adapted to suit the conditions.

► Check the tread depth and the condition of the tyre contact surface across the entire width of all tyres on a regular basis.

MINIMUM TREAD DEPTH FOR

- Summer tyres: 3 mm
- M+S tyres: 4 mm

► For safety reasons, replace the tyres before the legally-prescribed limit for the minimum tread depth is reached.

► Replace the tyres immediately if the legally-prescribed limit for the minimum tread depth is reached.

CONDUCT THE FOLLOWING CHECKS REGULARLY ON ALL WHEELS, AT LEAST ONCE A MONTH OR AS REQUIRED, E.G. BEFORE A LONG JOURNEY OR WHEN DRIVING OFF-ROAD:

- check the tyre pressure (→ page 677)

- check the valve caps

  The valves must be protected against moisture and dirt by the valve caps approved especially for your vehicle by Mercedes-Benz .
- Visually inspect the tread depth and the tyre tread across the whole tyre width

  The minimum tyre tread depth for summer tyres is 3 mm and for winter tyres 4 mm.

Information on driving with summer tyres

Summer tyres significantly lose elasticity and therefore traction and braking power at temperatures below 10 °C. Change the tyres on your vehicle to M+S tyres. Using summer tyres at very cold temperatures could cause tears to form, thereby damaging the tyres permanently. Mercedes-Benz cannot accept responsibility for this type of damage.

Always observe the maximum permissible speed specified for the summer tyres you have fitted .

ONCE YOU HAVE FITTED THE SUMMER TYRES:

- Restart the tyre pressure monitoring system (⟶ page 680)
- Check the tyre pressures (⟶ page 677)

Information on M+S tyres

WARNING
Risk of an accident due to insufficient tyre tread

M+S tyres with a tread depth of less than 4 mm are not suitable for use in winter and do not provide sufficient grip.

► M+S tyres with a tread depth of less than 4 mm must be replaced immediately.

At temperatures below 10 °C use winter tyres or all-season tyres marked M+S.

Only winter tyres bearing the snowflake symbol in addition to the M+S marking provide the best possible grip in wintry road conditions.

Only these tyres allow driving safety systems, e.g. ABS and ESP® to also function optimally in winter. These tyres have been developed specifically for driving in snow.

Use M+S tyres of the same make and tread on all wheels to maintain safe handling characteristics.

Observe the maximum permissible speed specified for the M+S tyres you have fitted.

If you fit M+S tyres that have a lower maximum permissible speed than the maximum design speed of the vehicle, affix an appropriate information label in the driver's field of vision. You can obtain this at a qualified specialist workshop.

For vehicles with a limiter: you should also restrict the maximum design speed of the vehicle using the permanent limiter so that it does not exceed the maximum permissible speed for the M+S tyres (⟶ page 385).

ONCE YOU HAVE FITTED THE M+S WINTER TYRES, TAKE THE FOLLOWING MEASURES:

- Restart the tyre pressure monitoring system (⟶ page 680)
- Check the tyre pressure (⟶ page 36)

Notes on snow chains

WARNING
Risk of accident due to incorrectly fitted snow chains

Vehicles with rear-wheel drive: if you have fitted snow chains to the front wheels, they may drag against the vehicle body or chassis components.

- Never fit snow chains to the front wheels.
- Only fit snow chains on the rear wheels in pairs.
- **Vehicles with twin tyres:** fit the snow chains to the outer wheels.

WARNING
Risk of accident due to incorrectly fitted snow chains

Vehicles with front-wheel drive: if you have fitted snow chains to the rear wheels, they may drag against the vehicle body or chassis components.

- Never fit snow chains on the rear wheels.
- Only fit snow chains on the front wheels in pairs.

WARNING
Risk of accident due to unsuitable snow chains

Commercially available snow chains can come loose and damage chassis components or brake hoses.

- On vehicles with all-wheel or front-wheel drive and single tyres, only fit snow chains approved by Mercedes-Benz for these tyres.

For safety reasons, Mercedes-Benz recommends that you only use snow chains that have been tested and approved. You can obtain information about snow chains from any qualified specialist workshop.

WARNING
Risk of accident due to snow chains breaking

If you drive too fast with snow chains, they can break, injure other persons, and damage the vehicle.

- Observe the maximum permissible speed for operation with snow chains.

NOTE
Damage to the wheel trim from fitted snow chains

If snow chains are fitted to steel wheels, the wheel trims can be damaged.

► Remove the wheel trims of steel wheels before fitting snow chains.

OBSERVE THE FOLLOWING NOTES WHEN USING SNOW CHAINS:

- Snow chains are only permissible for certain wheel/tyre combinations. You can obtain information on this matter at a qualified specialist workshop.
- For safety reasons, only use snow chains that have been specifically approved for your vehicle by Mercedes-Benz, or snow chains with the same quality standard.
- The snow chains must be retightened after driving approximately 1 km. This is the only way to ensure the snow chains are optimally fitted with clearance to adjacent components.
- **Vehicles with all-wheel drive:** always fit snow chains on all four wheels. On vehicles with twin tyres, fit the snow chains on the outer wheels. Observe the manufacturer's installation instructions.
- Use snow chains only when the road surface is completely snow-covered. Remove the snow chains as soon as possible when you come to a road that is not snow-covered.
- Local regulations may restrict the use of snow chains. Observe the applicable regulations before fitting snow chains.
- If snow chains are fitted, the maximum permissible speed is 50 km/h.
- **Vehicles with Parking Assist:** do not use Parking Assist PARKTRONIC when snow chains are fitted.

ⓘ You can permanently limit the maximum design speed for driving with winter tyres (→ page 385).

Tyre pressure

Notes on tyre pressure

WARNING
Risk of an accident due to tyre pressure that is insufficient or too high

TYRES WITH A PRESSURE THAT IS INSUFFICIENT OR TOO HIGH POSE THE FOLLOWING DANGERS IN PARTICULAR:

- The tyres can burst.
- The tyres can wear excessively and/or unevenly.
- The driving characteristics as well as the steering- and braking may be greatly impaired.

▶ Observe the recommended tyre pressures and check the tyre pressure of all tyres including the spare wheel:

- monthly
- when the load changes
- before embarking on a longer journey
- when the operating conditions change, e.g. off-road driving
- when driving at over 250 km/h

▶ Adjust the tyre pressure, if necessary.

DRIVING WITH TYRE PRESSURE THAT IS TOO HIGH OR TOO LOW CAN:

- shorten the service life of the tyres.
- contribute to tyre damage.
- adversely affect driving characteristics and thus driving safety, e.g. due to aquaplaning.

WARNING
Risk of accident due to repeated pressure drop in the tyres

The wheels, valves or tyres could be damaged.

Too low a tyre pressure can lead to the tyres bursting.

▶ Examine the tyres for foreign objects.

▶ Check whether the tyre has a puncture or the valve has a leak.

▶ If you are unable to rectify the damage, contact a qualified specialist workshop.

Information on the recommended tyre pressure for the vehicle's factory-fitted tyres can be found in the tyre pressure table on the B-pillar or on the seat box on the driver's side (⟶ page 678).

Use a suitable pressure gauge to check the tyre pressure. The outward appearance of a tyre does not allow any reliable conclusion about the tyre pressure.

Vehicles with a tyre pressure monitoring system: you can also check the tyre pressure via the instrument cluster (⟶ page 36).

> **Tourer models with a GVWR of 3.0 t and 3.5 t:** when changing from 245/65 R17XL tyres to one of the other approved tyre sizes or vice versa, the permissible pressure range of the tyre pressure monitoring system must be recoded. Contact a qualified Mercedes-Benz specialist workshop for this purpose.

ONLY CHECK TYRE PRESSURES WHEN THE TYRES ARE COLD. CONDITIONS FOR COLD TYRES:

- The vehicle has been parked with the tyres out of direct sunlight for at least three hours.
- The vehicle has travelled less than 1.6 km.

A rise in the tyre temperature of 10°C increases the tyre pressure by approx. 10 kPa (0.1 bar/1.5 psi). Take this into account when checking the tyre pressure of warm tyres.

NOTES ON TRAILER OPERATION
The applicable tyre pressure for the tyres of the rear axle is always the tyre pressure recommended in the tyre pressure table for a full load.

Overview of the tyre pressure table

The tyre pressure table can be found on the seat base or on the B-pillar on the driver's side.

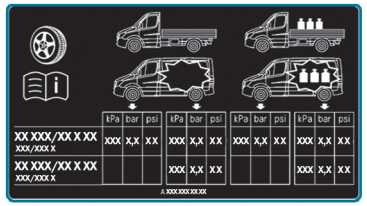

The tyre pressure table shows the recommended tyre pressure for the tyres fitted on this vehicle at the factory. The recommended tyre pressures are valid for cold tyres and different vehicle load conditions.

If one or more tyre sizes precede a tyre pressure, the tyre pressure information following is only valid for those tyre sizes.

If the preceding tyre sizes are supplemented by the [i] symbol, the subsequent tyre pressure information shows alternative tyre pressures.

The load conditions "empty" and "fully laden" are defined in the table by varying weights.

BE SURE TO ALSO OBSERVE THE FOLLOWING FURTHER RELATED SUBJECTS:

- Notes on tyre pressure (⟶ page 677)

Tyre pressure monitoring system

FUNCTION OF THE TYRE PRESSURE MONITORING SYSTEM
The system measures the tyre pressure and the temperature of the tyres fitted to the vehicle by means of a tyre pressure sensor.

New tyre pressure sensors, e.g. in winter tyres, are automatically taught-in during the first journey.

Tourer models with a GVWR of 3.0 t and 3.5 t: when changing from 245/65 R17XL tyres to one of the other approved tyre sizes or vice versa, the permissible pressure range of the tyre pressure monitoring system must be recoded. Contact a qualified Mercedes-Benz specialist workshop for this purpose.

The tyre pressure and the tyre temperature appear in the display of the instrument cluster (⟶ page 454).

IF THERE IS A SUBSTANTIAL LOSS OF TYRE PRESSURE, A WARNING IS ISSUED:

- via display messages (⟶ page 792)
- via the warning lamp in the instrument cluster (⟶ page 822)

It is the driver's responsibility to set the tyre pressure to the recommended cold tyre pressure suitable for the operating situation. Set the tyre pressure for cold tyres using a tyre pressure gauge. Note that the tyre pressure monitoring system must first learn the correct tyre pressure for the current operating situation.

In most cases, the tyre pressure monitoring system will automatically update the new reference values after you have changed the tyre pressure. You can, however, also update the reference values by restarting the tyre pressure monitoring system manually (⟶ page 680).

SYSTEM LIMITS

THE SYSTEM MAY BE IMPAIRED OR INOPERATIVE IN THE FOLLOWING SITUATIONS:

- if the tyre pressure has been set incorrectly
- if there is a sudden pressure loss caused, for example, by a foreign object penetrating the tyre
- if there is a malfunction caused by another radio signal source
- if there is a change of tyre sizes

BEAR IN MIND THE FOLLOWING RELATED TOPIC:

- Notes on tyre pressure (⟶ page 677)

CHECKING THE TYRE PRESSURE WITH THE TYRE PRESSURE MONITORING SYSTEM

Requirements:

- The vehicle is switched on.

Instrument cluster:

Service ▸▸ Tyres

ONE OF THE FOLLOWING DISPLAYS APPEARS:

- Current tyre pressure and tyre temperature of the individual wheels

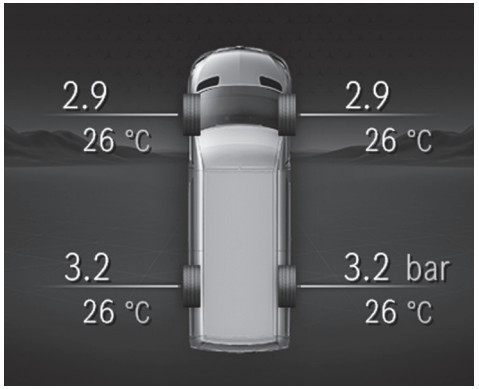

Instrument cluster display

- Tyre pressures will be displayed after a few minutes of driving: The teach-in process of the system is not yet complete. The tyre pressures are already being monitored.

▶ Compare the tyre pressure with the recommended tyre pressure for the current operating status (⟶ page 678). Observe the notes on tyre temperature (⟶ page 677).

ⓘ The values displayed on the instrument cluster may deviate from those of the tyre pressure gauge, as they refer to sea level. At high altitudes, the tyre pressure values indicated by a pressure gauge are higher than those shown in the instrument cluster. If this is the case, do not reduce the tyre pressures.

REFER ALSO TO THE FOLLOWING RELATED TOPIC:

- Notes on tyre pressure (⟶ page 677)

RESTARTING THE TYRE PRESSURE MONITORING SYSTEM

Requirements:

- The recommended tyre pressure is correctly set for the respective operating condition on each of the wheels (⟶ page 677).
- **Restart the tyre pressure monitoring system in the following situations:**
  - If the tyre pressure has changed.
  - If the wheels or tyres have been changed or newly fitted.

Instrument cluster:

Service ▶▶ Tyres

▶ Scroll down in the menu.

The message Use current pressures as new reference values? appears in the instrument cluster.

▶ Confirm the message to initiate a restart.

The message Tyre press. monitor restarted appears in the instrument cluster.

Current warning messages are deleted and the (!) yellow warning lamp goes out.

After you have driven for a few minutes, the system checks whether the current tyre pressures are within the specified range. The current tyre pressures are then accepted as reference values and monitored.

BEAR IN MIND THE FOLLOWING RELATED TOPIC:

- Notes on tyre pressure (⟶ page 677)

RADIO EQUIPMENT APPROVAL OF THE TYRE PRESSURE MONITORING SYSTEM

RADIO EQUIPMENT APPROVAL NUMBERS

Country or region	Radio equipment approval number
Argentina	R! H-20027
Australia	
Brazil	ANATEL MODELO: TSSRE4A ANATEL: 05181-17-06643 Este equipamento opera em caráter secundário, isto é, não tem direito à proteção contrainterferência prejudicial, mesmo de estações do mesmo tipo e não pode causar interferência a sistemas operando em caráter primário.
Canada	IC: 4008C-TSSRE4A Operation is subject to the following two conditions: (1) this device may not cause harmful interference, and (2) this device must accept any interference received, including interference that may cause undesired operation.

Country or region	Radio equipment approval number
European Union Iceland Norway	CE Huf Hülsbeck & Fürst GmbH & Co. KG hereby declare that the two-way radio system type TSSRE4A & TSSSG4G6 conforms to the directive 2014/53/EU. The complete text of the EU declaration of conformity is available at the following internet address: http://www.huf-group.com/eudoc Frequency band: 433.92 MHz Maximum transmission output emitted: <10 mW Manufacturer: Huf Electronics Bretten GmbH Gewerbestr. 40 75015 Bretten Germany
Indonesia	TSSRE4A & TSSSG4G6 52166/SDPPI/2017 3533
Israel	A. The use of this product does not need a wireless operation license. B. The product does not include an RF disturbance protection, and should not disturb other licensed products. C. It is forbidden to replace the antenna or to make any change in this product.

Country or region	Radio equipment approval number
Jordan	Kingdom of Jordan Type approval for Tyre Pressure Sensor and ECU Manufacturer: Huf Electronics Bretten GmbH Model: TSSRE4A Type Approval Number: TRC/LPD/2017/421 Model: TSSSG4G6 Type Approval Number: TRC/LPD/2017/422
Malaysia	MCMC CIDF17000184 Model: TSSRE4A & TSSSG4G6 RAQP/57A/0817/S(17-2424)
Morocco	AGREE PAR L'ANRT MAROC Modele: TSSRE4A Numero d'agrement: MR 14320 ANRT 2017 Date d'agrement: 07/07/2017 Modele: TSSSG4G6 Numero d'agrement: MR 14319 ANRT 2017 Date d'agrement: 07/07/2017
Mexico	Model: TSSRE4A, IFETEL: RLVHUTS17-0806
Oman	OMAN - TRA R/4516/17 D100428
Philippines	NTC Type Approved. No: ESD-1715393C

Country or region	Radio equipment approval number
Russia	EAC
Singapore	Complies with IMDA Standards DA103787
South Africa	ICASA TA-2017/1393 TA-2017/1391
South Korea	KC R-CRM-HHF-TSSRE4A R-REM-HHF-TSSSG4G6 Applicant name: Huf Hülsbeck & Fürst GmbH & Co. KG Equiment name: Tire Pressure Monitoring System Manufacturing Year/Month: on the product Manufacturer: Huf Electronics Bretten GmbH Country of origin: Germany □□ □□ □□ □□□ □□ □ □□□□ □□□□ □□□□ □□□□□ □□□ □□□□ □ □ □□. (This device is not allowed to provide service related human body since it has possibility of frequency interference during on operation.)
Taiwan	NCC CCAO17LP0380T4 CCAO17LP0390T7
Thailand	This telecommunication equipment conforms to NTC technical requirement.

Country or region	Radio equipment approval number
Ukraine	Model: TSSRE4A & TSSSG4G6 UA.TR.109.0109-17
United Arab Emirates	Huf Electronics Bretten GmbH Model: TSSRE4A Model: TSSSG4G6 TRA Registered No: ER57807/17 Dealer No: DA36976/14 TRA Registered No: ER57806/17 Dealer No: DA36976/14
USA	FCC ID: YGOTSSRE4A This device complies with Part 15 of the FCC Rules. Operation is subject to the following two conditions: (1) this device may not cause harmful interference, and (2) this device must accept any interference received, including interference that may cause undesired operation. WARNING: Any changes or modification not expressly approved by the party responsible for compliance could void the user's authority to operate this equipment.

Changing a wheel

Notes on selecting, fitting and replacing tyres

You can ask for information regarding permitted wheel/tyre combinations at a qualified specialist workshop.

WARNING
Risk of accident due to incorrect wheel and tyre dimensions

If wheels and tyres of the wrong size are used, the service brakes or wheel suspension components may be damaged.

► Always replace wheels and tyres with ones that fulfil the specifications of the original part.

FOR WHEELS, PAY ATTENTION TO THE FOLLOWING:

- Designation
- Type
- Permissible wheel load
- Wheel offset

FOR TYRES, PAY ATTENTION TO THE FOLLOWING:

- Designation
- Manufacturer
- Type
- Load-bearing index
- Speed rating

WARNING
Risk of injury through exceeding the specified tyre load-bearing capacity or the permissible speed rating

Exceeding the load-bearing capacity of the tyres can lead to tyre damage and could cause the tyres to explode.

- Therefore, only use tyre types and sizes approved for your vehicle model.
- Observe the tyre load-bearing capacity rating and speed rating required for your vehicle.

NOTE
Vehicle and tyre damage due to tyre types and sizes that have not been approved

For safety reasons, only use tyres, wheels and accessories which have been specially approved by Mercedes-Benz for your vehicle.

These tyres have been specially adapted for use with driving systems and driving safety systems, such as ABS or ESP®.

Otherwise, certain properties, such as handling characteristics, vehicle noise emissions and consumption could be adversely affected. Other wheel sizes may cause the tyres to come into contact with the vehicle body and axle components when under load. This may result in damage to the tyre or the vehicle.

- Only use tyres, wheels and accessories that have been checked and recommended by Mercedes-Benz.

NOTE
Driving safety put at risk by retreaded tyres

Retreaded tyres are not checked or recommended by Mercedes-Benz, as previous damage is not always detected during the retread process.

Driving safety cannot, therefore, be guaranteed.

- Do not use used tyres when their previous usage is unknown.

NOTE
Possible wheel and tyre damage when driving over obstacles

Large wheels have a smaller section width. As the section width decreases, the risk of wheels and tyres being damaged when driving over obstacles increases.

- Avoid obstacles or drive especially carefully.
- Reduce your speed when driving over kerbs, speed bumps, manhole covers and potholes.
- Avoid particularly high kerbs.

Accessories that are not approved for your vehicle by Mercedes-Benz , or are not being used correctly, can impair operating safety.

BEFORE PURCHASING AND USING NON-APPROVED ACCESSORIES, VISIT A QUALIFIED SPECIALIST WORKSHOP AND ENQUIRE ABOUT:

- suitability
- legal stipulations

- factory recommendations

OBSERVE THE FOLLOWING POINTS WHEN SELECTING, FITTING AND REPLACING TYRES:

- Country-specific requirements for tyre approval that define a specific tyre type for your vehicle.

  Furthermore, the use of certain tyre types in certain regions and areas of operation can be highly beneficial.
- Use only tyres and wheels of the same type, design (summer tyres, winter tyres, all-season tyres) and make.
- Only fit wheels of the same size and tread design on one axle (left and right).

  It is only permissible to fit a different wheel size to this in the event of a flat tyre in order to drive to the specialist workshop.
- Only fit tyres of the correct size onto the wheels.
- Do not make any modifications to the brake system, the wheels or the tyres.

  The use of shims or brake dust shields is not permitted and results in the invalidation of the vehicle's general operating permit.
- **Vehicles with a tyre pressure monitoring system:** all fitted wheels must be equipped with functioning sensors for the tyre pressure monitoring system.
- At temperatures below 10 °C, use winter tyres or all-season tyres marked M+S for all wheels.

  Winter tyres bearing the snowflake symbol in addition to the M+S marking provide the best possible grip in wintry road conditions.
- For M+S tyres, only use tyres with the same tread.
- Observe the maximum permissible speed for the M+S tyres fitted.

  If this is below the vehicle's maximum permissible speed, this must be indicated in an appropriate label in the driver's field of vision.
- Run in new tyres at moderate speeds for the first 100 km.
- Replace the tyres after six years at the latest, regardless of wear.

For more information on wheels and tyres, contact a qualified specialist workshop.

ALSO OBSERVE THE FOLLOWING FURTHER RELATED SUBJECTS:

- Notes on tyre pressure (⟶ page 677)
- Tyre pressure table (⟶ page 678)
- Notes on the emergency spare wheel (⟶ page 698)

Notes on changing wheels

WARNING
Risk of injury through different wheel sizes

Interchanging the front and rear wheels can severely impair the driving characteristics.

The disk brakes or wheel suspension components may also be damaged.

► Only interchange the front and rear wheels if the wheels and tyres have the same dimensions.

Interchanging the front and rear wheels if the wheels or tyres have different dimensions can render the general operating permit invalid.

On vehicles with the same front and rear wheel size, you can interchange the wheels every 5,000 to 10,000 km depending on the wear. Ensure the direction of rotation is maintained for the wheels.

It is imperative to observe the instructions and safety notes on "Changing a wheel" when doing so.

Wheel size groups

The determined vehicle speed is displayed in the instrument cluster and is important for controlling the driving safety systems and driving systems. The display accuracy of the speedometer and the odometer is legally prescribed. Determining the speed is dependent on the tyre size or the rolling circumference of the tyres. The rim diameter is always specified in inches.

For this reason, the vehicle's control units can be coded for the following wheel size groups:

WHEEL SIZE GROUP 1

- 195/75 R16C
- 205/75 R16C
- 225/65 R16C
- 235/65 R16C
- 235/60 R17C

WHEEL SIZE GROUP 2

- 225/75 R16C

WHEEL SIZE GROUP 3

- 205/75 R16C FA
- 225/75 R16C FA
- 285/65 R16C RA

WHEEL SIZE GROUP 4

- 245/65 R17XL

ⓘ **Tourer models with a GVWR of 3.0 t and 3.5 t:** when changing from 245/65 R17XL tyres to one of the other approved tyre sizes or vice versa, the permissible pressure range of the tyre pressure monitoring system must be recoded. Contact a qualified specialist workshop for this purpose.

ⓘ Mercedes-Benz recommends that you stay within a wheel size group when changing a tyre. In this way, you avoid having to recode the control units.

If you change the wheel size of your vehicle, for instance when changing wheels for winter operation, check that it is assigned to the correct wheel size group. If the wheel size group changes, you must have your vehicle's control units recoded at a qualified specialist workshop.

Otherwise, the display accuracy of the speedometer and the odometer will be outside the legally prescribed tolerance. It may also be lower, i.e. the current road speed is then higher than the speed shown on the speedometer. If a deviation is outside the range of tolerance, driving safety systems and driving systems may be operationally impaired or may detect a malfunction and switch themselves off.

Information on the direction of tyre rotation

Tyres with a specified direction of rotation have additional benefits, e.g. if there is a risk of aquaplaning. You will only gain these benefits if the correct direction of rotation is observed.

An arrow on the sidewall of the tyre indicates its correct direction of rotation.

You may also fit a spare wheel against the direction of rotation. Observe the time restriction on use as well as the speed restriction specified on the spare wheel.

Information on storing wheels

OBSERVE THE FOLLOWING WHEN STORING WHEELS:

- Wheels that have been removed should be stored in a cool, dry and, if possible, dark place.
- Protect the tyres from oil, grease and fuel.

Overview of the tyre-change tool kit

NECESSARY TYRE-CHANGE TOOL KIT MAY INCLUDE, FOREXAMPLE:

- Jack
- Wheel spanner

> ⓘ You will find the maximum load capacity of the jack stated on the adhesive label attached to the jack.
> The jack is maintenance-free. If there is a malfunction, please contact a qualified specialist workshop.

VEHICLES WITH REAR WHEEL DRIVE

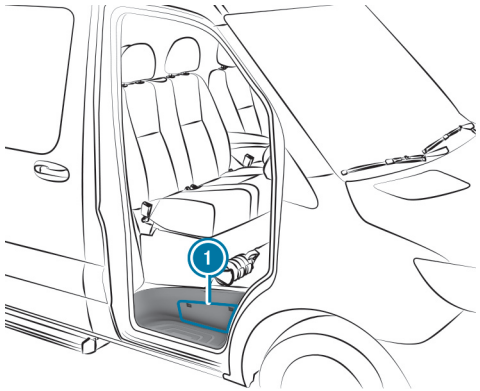

The tyre-change tool kit is located in the stowage compartment (1) above the step of the co-driver's door and in the stowage compartment in the footwell on the co-driver side.

VEHICLES WITH FRONT WHEEL DRIVE

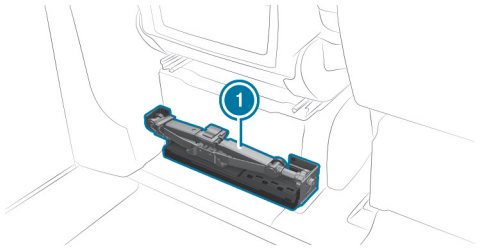

The tyre-change tool kit (1) is located behind the driver's seat.

Preparing the vehicle for a wheel change

Requirements:

- The wheel-change tool kit is available.

- There is a spare wheel available.
- The vehicle is not on a slope.
- The vehicle is on solid, non-slippery and level ground.

▶ Apply the parking brake.

▶ Move the front wheels to the straight-ahead position.

▶ **Vehicles with manual transmission:** engage first or reverse gear R.

▶ **Vehicles with automatic transmission:** shift to transmission position P.

▶ Switch off the vehicle.

▶ Make sure that the vehicle cannot be switched on.

▶ Take the vehicle tool kit from the footwell on the front passenger side (→ page 664).

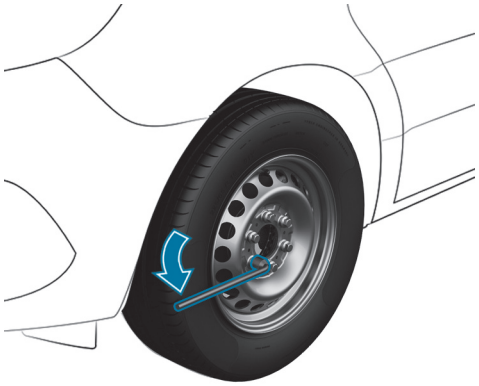

VEHICLES WITH REAR WHEEL DRIVE

▶ Take the jack and the tyre-change tool kit out of the stowage compartment (→ page 69).

▶ If necessary, remove the wheel trim.

▶ Assemble the wheel spanner extension using the middle rod and the rod with the largest diameter from the three-part jack pump lever.

▶ Starting with the middle rod, slide the wheel spanner extension as far as it will go onto the wheel spanner.

▶ Using the wheel spanner, loosen the wheel nuts or bolts on the wheel you wish to change by about one full turn. Do not unscrew the wheel nuts or bolts completely.

▶ Raise the vehicle (→ page 690).

VEHICLES WITH FRONT WHEEL DRIVE

▶ Take the jack and the tyre-change tool kit from behind the driver's seat (→ page 69).

▶ If necessary, remove the wheel trim.

▶ Using the wheel spanner, loosen the wheel nuts or bolts on the wheel you wish to change by about one full turn. Do not unscrew the wheel nuts or bolts completely.

▶ Raise the vehicle (→ page 690).

Raising the vehicle when changing a wheel

WARNING
Risk of injury due to the jack tipping over

If you park a vehicle with air suspension, the air suspension can remain active for up to an hour, even if the vehicle is switched off. If you then raise the vehicle using the jack, the air suspension will attempt to even out the vehicle level.

The jack can tip over.

- Before raising the vehicle, press the Service button on the remote control for the air suspension.
  This prevents the vehicle level from being automatically readjusted or manually raised or lowered.

WARNING
Risk of injury from incorrect positioning of the jack

If you do not position the jack correctly at the appropriate jacking point of the vehicle, the jack could tip with the vehicle raised.

- Only position the jack at the appropriate jacking point of the vehicle. The base of the jack must be positioned vertically under the jacking point of the vehicle.

WARNING
Risk of injury from vehicle tipping

On slopes, the jack could tip with the vehicle raised.

- Never change a wheel on a slope.
- Consult a qualified specialist workshop.

NOTE
Damage to the vehicle due to the jack

If the jack has not been positioned at the prescribed jack support points, the vehicle may suffer damage.

- Only position the jack at the jack support points provided for this purpose.

Requirements:

- There is nobody in the vehicle.
- The vehicle is prepared for changing a wheel (→ page 688).

Only position the jack on the jack support points intended for this purpose. Otherwise you could damage the vehicle.

IMPORTANT NOTES ON USING THE JACK:

- Only use the vehicle-specific jack that has been tested and approved by Mercedes-Benz to raise the vehicle. If the jack is used incorrectly, it could tip over while the vehicle is raised.

- The jack is designed only to raise the vehicle for a short time while a wheel is being changed and is not suitable for carrying out maintenance work under the vehicle.
- Avoid changing a wheel on uphill or downhill slopes.
- The jack must be placed on a firm, flat and non-slip surface. If necessary, use a large, flat, load-bearing and non-slip underlay.
- The foot of the jack must be positioned vertically under the jack support point.

SAFETY INSTRUCTIONS WHILE THE VEHICLE IS RAISED:

- Do not put your hands or feet under the vehicle.
- Do not lie underneath the vehicle.
- Do not start the vehicle and do not release the parking brake.
- Do not open or close any doors.

VEHICLES WITH FRONT WHEEL DRIVE

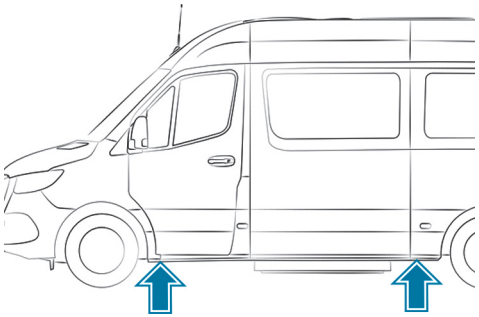

Jack support points

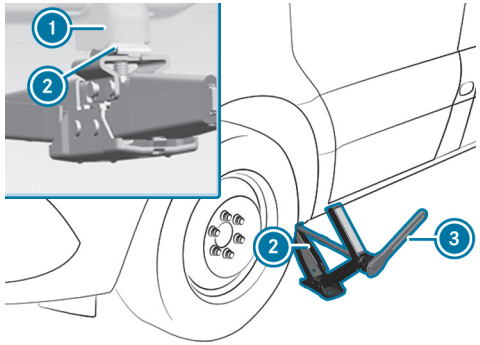

Jack support point, front axle

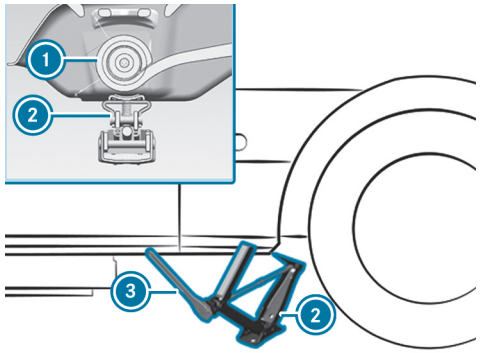

Jack support point, rear axle

- ▶ If necessary, turn the head of the jack.
- ▶ Position the jack ② at the jack support point ①.
- ▶ Turn the handwheel until the plate of the jack sits securely on the jack support point ①.

- **Front axle:** position the ratchet ring spanner ③ from the tyre-change tool kit on the hexagon nut of the jack so that the lettering "AUF" is visible.
- **Rear axle:** position the extension rod and the socket wrench from the tyre-change tool kit on the hexagon nut of the jack and position the ratchet ring spanner ③ from the tyre-change tool kit on the extension rod so that the lettering "AUF" is visible.
- Turn the ratchet ring spanner ③ clockwise until the jack ② sits completely on the jack support point ① and the base of the jack sits evenly on the ground.
- Turn the ratchet ring spanner ③ until the tyre is raised a maximum of 3 cm off the ground.
- Loosen and remove the wheel (→ page 694).

VEHICLES WITH REAR WHEEL DRIVE

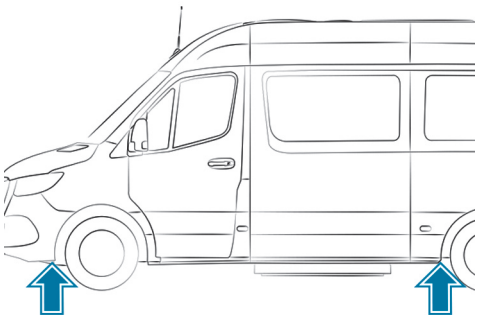

Jack support points

Only use the middle rod and the pump lever rod with the largest diameter for the jack as a wheel spanner extension. Only insert the middle rod on the wheel spanner, and always as far as it will go. Otherwise, the rods could bend and deform so much that they can no longer be used as pump levers for the jack.

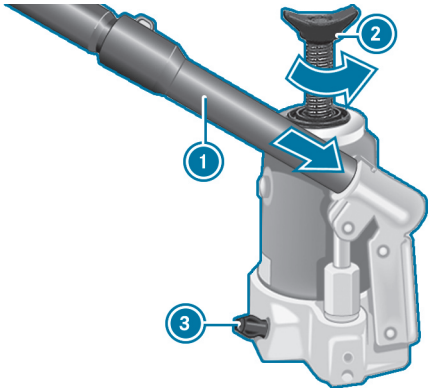

- **To prepare the hydraulic jack:** insert the third rod of the pump lever ① for the jack into the wheel wrench extension.
- Close the pressure release screw ③.
- To do this, use the flattened section on the pump lever ① to turn the pressure release screw ③ clockwise to the stop.

> ⓘ Do not turn the pressure release screw ③ more than one or two full turns. Hydraulic fluid could otherwise escape.

- Insert the pump lever ① with the largest rod into the recess on the jack and secure by turning it clockwise.
- Place the jack vertically beneath the jack support points described below.

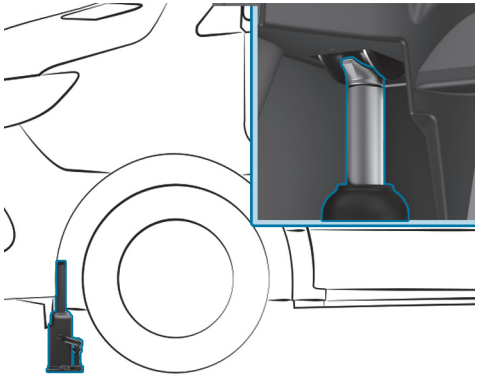

Jack support point, front axle

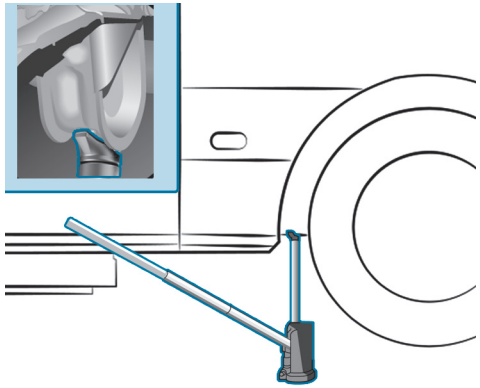

Jack support point, rear axle (example: Panel Van and Tourer up to 4.0 t)

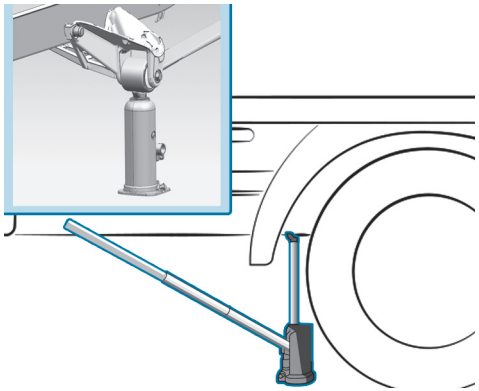

Jack support point, rear axle (example: platform vehicle up to 3.5 t)

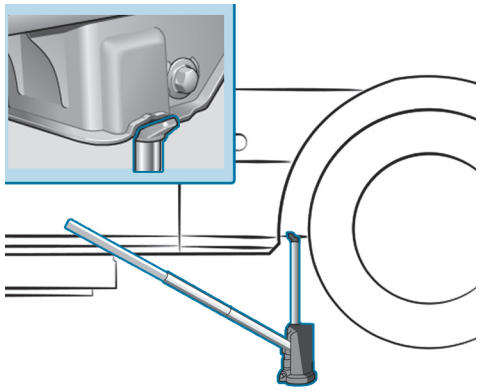

Jack support point, rear axle (5.0 t vehicles)

- Place the jack beneath the jack support point.
- **Vehicles with all-wheel drive:** turn the jack spindle ② anti-clockwise as far as it will go.
- Raise the vehicle until the tyre is raised a maximum of 3 cm off the ground.

- Loosen and remove the wheel (→ page 694).

Removing a wheel

Requirements

- The vehicle is raised (→ page 690).

When changing a wheel, avoid applying any force to the brake discs since this could impair the level of comfort when braking.

NOTE
Damage to threading from dirt on wheel bolts

- Do not place wheel bolts in sand or on a dirty surface.

- Unscrew the wheel bolts or nuts with the wheel nut wrench.
- On front wheels with wheel nuts, remove the wheel nut cover.
- Remove the wheel.
- Install the new wheel (→ page 694).

Fitting a new wheel

Requirements:

- The wheel has been removed (→ page 694).

WARNING
Risk of accident from losing a wheel

Oiled or greased wheel bolts can cause the wheel bolts to come loose, as too can damaged wheel bolts or wheel hub threads.

- Never oil or grease the threads.
- In the event of damage to the threads, contact a qualified specialist workshop immediately.
- Have the damaged wheel bolts or damaged hub threads replaced.
- Do not continue driving.

WARNING
Risk of injury from tightening wheel bolts and nuts

If you tighten the wheel bolts or wheel nuts when the vehicle is raised, the jack could tip.

- Only tighten wheel bolts or wheel nuts when the vehicle is on the ground.

- Observe the instructions and safety notes on wheel-changing and the notes on tyre selection (→ page 684).
- For safety reasons, only use wheel bolts or wheel nuts which have been approved by Mercedes-Benz and for the wheel in question.

When you fit the steel spare wheel, it is essential you use the short wheel bolts for a steel wheel. Using other wheel bolts when fitting the steel spare wheel may damage the brake system.

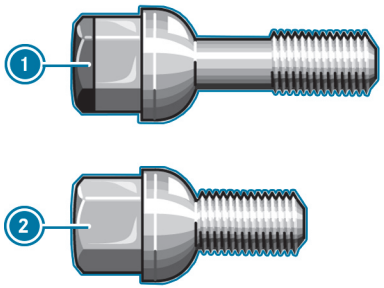

1. Wheel bolt for light-alloy wheel
2. Wheel bolt for steel wheel

- Clean the wheel and wheel hub contact surfaces.
- **Vehicle with super-single tyres on the rear axle:** First, remove the adapter from the spare wheel and attach it to the wheel hub of the rear axle.
- Slide the wheel which is to be fitted onto the wheel hub or the adapter for the spare wheel and push it on.

VEHICLES WITH STEEL WHEELS

- Use the short wheel bolts intended for the steel spare wheel, which are found in the vehicle tool kit.
- Screw in the wheel bolts until they are hand-tight.

VEHICLES WITH LIGHT ALLOY WHEELS

- Use the long wheel bolts intended for the light-alloy spare wheel, which are found in the vehicle tool kit.
- Screw in the wheel bolts until they are hand-tight.

WHEELS WITH WHEEL NUTS

- Front wheels with wheel nut cover: press the wheel nut cover onto the wheel nuts.
- Screw in three wheel nuts over the fixing discs of the wheel nut cover.
- Turn the wheel so that the wheel bolts are in the middle of the holes.
- Screw in the remaining wheel nuts.
- Slightly tighten all wheel nuts.

Lowering the vehicle after a wheel change

WARNING
Risk of accident due to incorrect tightening torque

The wheels could come loose if the wheel bolts or wheel nuts are not tightened to the prescribed torque.

- Ensure that the wheel bolts or wheel nuts are tightened to the prescribed tightening torque.
- If you are not sure, do not move the vehicle. Contact a qualified specialist workshop and have the tightening torque checked immediately.

Requirements:

- The new wheel has been fitted (⟶ page 694).

Observe the notes on raising the vehicle (⟶ page 690).

VEHICLES WITH FRONT WHEEL DRIVE

- **Front axle:** position the ratchet ring spanner from the tyre-change tool kit on the hexagon nut of the jack so that the lettering "AB" is visible.
- **Rear axle:** position the extension rod from the tyre-change tool kit on the hexagon nut of the jack and position the ratchet ring spanner from the tyre-change tool kit on the extension rod until the lettering "AB" is visible.
- **To lower the vehicle:** turn the ratchet ring spanner of the jack anti-clockwise.

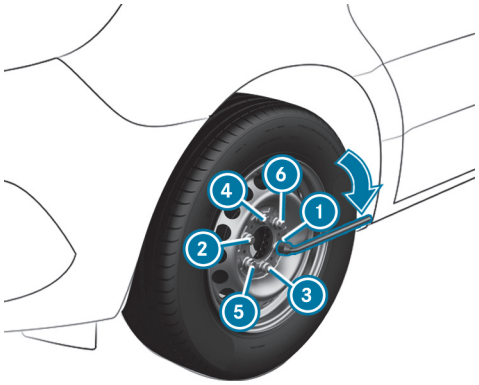

- Tighten the wheel bolts or nuts evenly in the sequence indicated (1 to 6).

  SPECIFIED TIGHTENING TORQUE:

  - Steel wheel bolts: 240 Nm
  - Wheel nuts: 180 Nm
  - Light-alloy wheel bolts: 180 Nm

VEHICLES WITH REAR WHEEL DRIVE

Only use the middle rod and the pump lever rod with the largest diameter for the jack as a wheel spanner extension. Only insert the middle rod on the wheel spanner, and always as far as it will go. Otherwise, the rods could bend and deform so much that they can no longer be used as pump levers for the jack.

Vehicles with Super Single tyres: if you mount the spare wheel to the rear axle, do not exceed the maximum speed of 55 km/h and the maximum distance of 100 km. Otherwise, the rear axle differential could be damaged due to the different wheel speeds.

- Using the pump lever, slowly turn the drain screw on the jack approximately one revolution and carefully lower the vehicle.
- Place the jack to one side.
- Pull the rod with the smallest diameter off the pump lever.

  The shortened pump lever serves as a wheel spanner extension.
- Starting with the middle rod, slide the wheel spanner extension as far as it will go onto the wheel spanner.

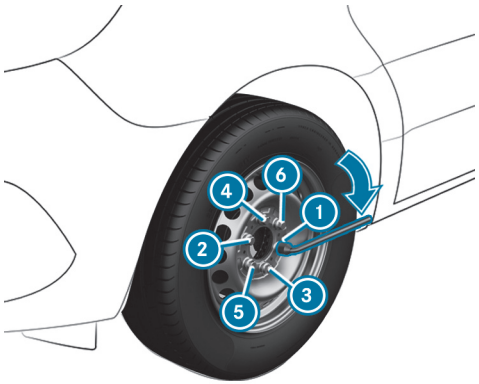

- Tighten the wheel bolts or nuts evenly in the sequence indicated (1 to 6).

  SPECIFIED TIGHTENING TORQUE:

  - Steel wheel bolts: 240 Nm
  - Wheel nuts: 180 Nm
  - Light-alloy wheel bolts: 180 Nm

- Push the piston on the hydraulic jack in again and close the pressure release screw.
- **Vehicles with all-wheel drive:** turn the jack spindle clockwise as far as it will go.

> ⓘ You can now fit the hub caps on steel wheels with wheel bolts. The fitting procedure depends on whether the hub cap acts as a wheel trim that covers the whole wheel, or just covers the centre.

- **Wheel with wheel trim:** position the opening in the wheel trim for the tyre valve over the tyre valve.
- Push the edge of the hub cap onto the wheel rim with both hands until it engages into place. Make sure the hub cap retaining catches engage on the steel wheel.
- **Wheel with central hub cap:** position the retaining lugs of the central hub cap over the wheel bolts.
- Hit the middle of the hub cap to engage it on the wheel.
- Secure the faulty wheel in the spare wheel holder.
- **Vehicles with Super Single tyres:** transport the defective rear wheel in the load area. The rear wheel is too large for the spare wheel holder.
- Check the tyre pressure of the newly fitted wheel and adjust it if necessary.
- Retighten the wheel bolts or wheel nuts to the specified tightening torque after the vehicle has been driven 50 km.
- When using a wheel or spare wheel with a new or newly painted wheel rim, have the wheel bolts or wheel nuts retightened after approximately 1,000 km to 5,000 km.

> ⓘ **Vehicles with a tyre pressure monitoring system:** all fitted wheels must be equipped with functioning sensors.

MAKE SURE TO OBSERVE THE FOLLOWING FURTHER RELATED SUBJECT:

- Notes on tyre pressure (→ page 677)

Spare wheel

Notes on the emergency spare wheel and spare wheel

Emergency spare wheel: wheel and/or tyre dimensions as well as the type of tyre are different from the wheel to be replaced.

ⓘ A label with the speed limitation can be found on the emergency spare wheel.

Spare wheel: wheel and tyre dimensions as well as the type of tyre correspond to the other fitted wheels.

A fitted emergency spare wheel or spare wheel changes the driving characteristics and bears risks.

⚠ **WARNING**
Risk of accident due to incorrect wheel and tyre dimensions

Mounting an emergency spare wheel or spare wheel may severely impair the driving characteristics.

There is an increased risk of an accident.

To prevent hazardous situations:

- Check the tyre pressure of the spare wheel or emergency spare wheel once fitted and, if necessary, adjust.
- The emergency spare wheel may only be used temporarily and must be replaced with a standard wheel as soon as possible.
- Never fit more than one emergency spare wheel.
- Adapt your driving style and drive carefully in emergency spare wheel mode.
- Do not switch off ESP®.
- Do not use snow chains on the emergency spare wheel.
- Replace the emergency spare wheel after six years at the latest, regardless of wear.

- When using an emergency spare wheel or spare wheel (different from the wheel to be replaced), you must not exceed a permissible top speed of 80 km/h.
- Have the emergency spare wheel or spare wheel replaced by a qualified specialist workshop (⟶ page 684).
- The tyre pressure of the emergency spare wheel or spare wheel must be checked before starting a journey and, if necessary, adjusted (⟶ page 678).

WARNING
Risk of accident due to damaged spare wheel with Super Single tyres

Vehicles with Super Single tyres

If you exceed the maximum speed or maximum distance, or refit the spare wheel, its tyre could be undetectably damaged and cause tyre pressure loss.

You could lose control of the vehicle.

► Only use the spare wheel if it has not yet been fitted to the rear axle with the current tyre.

► If the spare wheel has been fitted to the rear axle, have the tyre of the spare wheel replaced after changing the wheel again.

► For safety reasons, when changing a tyre ensure that only the tyre valve type approved for the tyres is used.

NOTE
Damage to the rear axle differential due to differing wheel speeds

Vehicles with Super Single tyres: when you fit the spare wheel on the rear axle, the rear axle differential may be damaged by the different wheel speeds.

► When the spare wheel is fitted on the rear axle, observe the maximum speed of 55 km/h and a maximum driving distance of 100 km.

It is possible to use the spare wheel without restrictions only on the front axle of a vehicle with Super Single tyres.

THE FOLLOWING SHOULD BE CHECKED REGULARLY, PARTICULARLY PRIOR TO LONG JOURNEYS:

- that the emergency spare wheel or spare wheel is firmly secured
- the tyre pressure of the emergency spare wheel or spare wheel (adjust the tyre pressure if necessary) (⟶ page 678)
- the fastenings of the emergency spare wheel holder or spare wheel holder

The spare wheel is located either in the load compartment or in a spare wheel holder under the vehicle.

Replace the tyres after six years at the latest, regardless of wear. This also applies to the spare wheel.

If you have fitted an emergency spare wheel or a spare wheel, the tyre pressure monitoring system will not function for this wheel. The emergency spare wheel or spare wheel is not equipped with a sensor for the tyre pressure monitoring system.

Installing and removing the spare wheel

VEHICLES WITH FRONT WHEEL DRIVE: REMOVING THE SPARE WHEEL

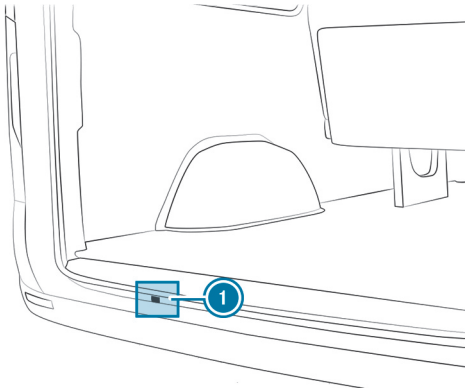

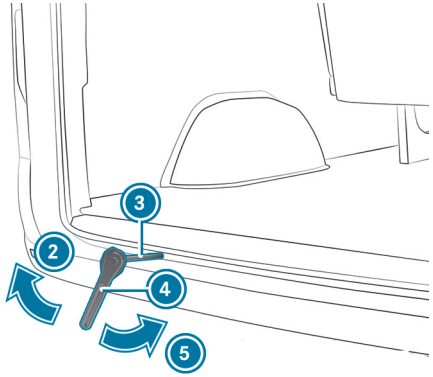

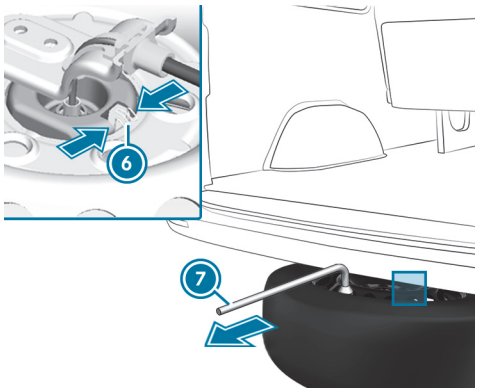

- Open the rear-end doors.
- Remove wheel spanner 7, ratchet ring spanner 4, and auxiliary tool 3 for the spare wheel lifter from the vehicle tool kit.
- Push auxiliary tool 3 through opening 1 into the winch guide.
- Place ratchet ring spanner 4 onto auxiliary tool 3 for the spare wheel lifter so that the letters "AB" are visible.
- Turn the ratchet ring spanner 4 in the direction of arrow 2 until you feel resistance or until the friction clutch of the winch overwinds.
- Hook wheel spanner 7 onto the inner edge of the spare wheel's rim and pull it out from under the vehicle.
- Press spring 6 together on the wheel gripper and release the wheel gripper from the spare wheel.

CHECK THAT THE SPARE WHEEL IS CORRECTLY AND FIRMLY POSITIONED:

- after every wheel change
- at every maintenance interval
- at least once a year

VEHICLES WITH FRONT WHEEL DRIVE: FITTING THE SPARE WHEEL

ⓘ Light-alloy wheels cannot be transported under the vehicle. In this case, transport the light-alloy wheel in the load compartment.

NOTE
Damage to the tyres and risk to driving safety due to incorrectly fitting the spare wheel

If the spare wheel is incorrectly fitted, the spare wheel can become damaged and driving safety cannot be guaranteed.

- When fitting the spare wheel, make sure the check cable is routed so that it does not become trapped between the vehicle and the spare wheel.
- Have the spare wheel checked at a qualified specialist workshop after it has been fitted.

- Remove ratchet ring spanner 4 and auxiliary tool 3 for the spare wheel lifter from the vehicle tool kit.
- Push auxiliary tool 3 through opening 1 into the winch guide.
- Place the wheel on the ground with the wheel dish facing up.
- Guide the wheel gripper at an angle along the cable into the wheel brace.
- Slide the wheel slightly under the vehicle.

- Place ratchet ring spanner 4 onto auxiliary tool 3 for the spare wheel lifter so that the letters "AUF" are visible.
- Turn ratchet ring spanner 4 in the direction of arrow 5 until you feel resistance or until the friction clutch of the winch overwinds.
- Pull ratchet ring spanner 4 and auxiliary tool 3 for the spare wheel lifter out of the opening for the winch and stow them in the vehicle tool kit.
- Close the rear-end doors.

VEHICLES WITH REAR-WHEEL DRIVE: REMOVING THE SPARE WHEEL (PANEL VAN OR TOURER)

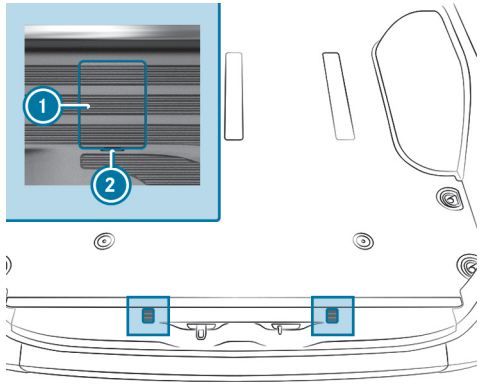

Bolt covers for the retaining hooks (example: panel van)

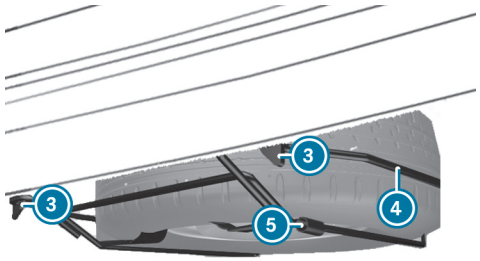

- Open the rear-end doors.
- Place a screwdriver into recesses 2 and prise off covers 1.
- Using the wheel spanner from the vehicle tool kit, unscrew the now visible bolts anti-clockwise by approximately 20 turns.
- Slightly raise spare wheel carrier 4 and unhook left-hand retaining hook 3.
- Assemble the pump lever for the jack and slide it into sleeve 5 on the right-hand side of spare wheel carrier 4.
- Raise spare wheel carrier 4 with the pump lever and unhook right-hand retaining hook 3.
- Slowly lower spare wheel carrier 4 to the ground.
- Lift spare wheel carrier 4 slightly and pull the pump lever out of the sleeve.
- Use the pump lever to lift the spare wheel beyond the rear edge of spare wheel carrier 4.

- Carefully remove the spare wheel from spare wheel carrier 4. The spare wheel is heavy. When the spare wheel is removed, the centre of gravity changes due to the heavy weight of the wheel. The spare wheel may slip down or tip over.

VEHICLES WITH REAR-WHEEL DRIVE: INSTALLING THE SPARE WHEEL (PANEL VAN OR TOURER)

- Carefully place the spare wheel onto spare wheel carrier 4. The spare wheel is heavy. When you place the spare wheel onto spare wheel carrier 4, the centre of gravity changes due to the weight of the wheel. The spare wheel may slip down or tip over.
- Slide the pump lever for the jack into sleeve 5 on spare wheel carrier 4.
- Raise spare wheel carrier 4 with the pump lever and attach right-hand retaining hook 3.
- Slightly raise spare wheel carrier 4 and attach left-hand retaining hook 3.
- Pull the pump lever out of sleeve 5.
- Using the wheel spanner, tighten the bolts for retaining hooks 3 by turning them clockwise.
- Replace and engage covers 1.
- Close the rear-end doors.

VEHICLES WITH REAR WHEEL DRIVE: REMOVING THE SPARE WHEEL (VEHICLE WITH LOWERED CHASSIS)

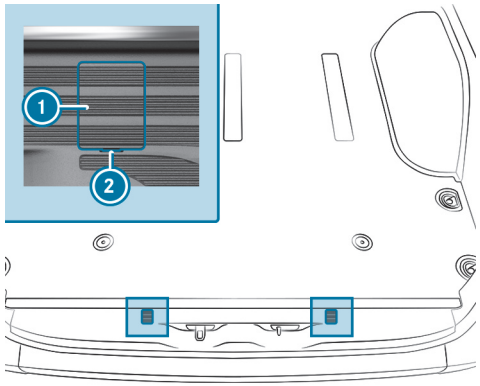

Bolt covers for the retaining hooks (example: panel van)

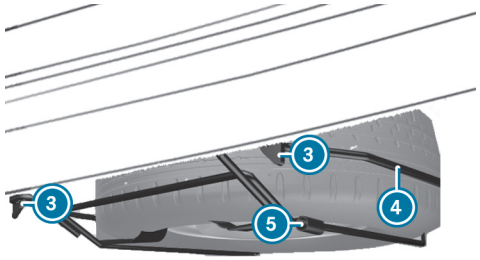

- Open the rear-end doors.
- Place a screwdriver into recesses 2 and prise off covers 1.
- Using the wheel spanner from the vehicle tool kit, unscrew the now visible bolts anti-clockwise by approximately 20 turns.

- Slightly raise spare wheel carrier (4) and unhook left-hand retaining hook (3).
- Assemble the pump lever for the jack and slide it into sleeve (5) on the right-hand side of spare wheel carrier (4).
- Raise the spare wheel carrier with the pump lever and unhook right-hand retaining hook (3).
- Prepare the jack.
- Place the jack beneath the corresponding jack support point.
- Move the pump lever up and down until the tyre is raised a maximum of 3 cm off the ground.
- Carefully remove the spare wheel from spare wheel carrier (4). The spare wheel is heavy. When the spare wheel is removed, the centre of gravity changes due to the heavy weight of the wheel. The spare wheel may slip down or tip over.
- Fit the spare wheel on the vehicle.
- Lower the vehicle.

VEHICLES WITH REAR WHEEL DRIVE: FITTING THE SPARE WHEEL (VEHICLE WITH LOWERED CHASSIS)

> ⓘ In the event of a flat tyre, you may only store the defective wheel inside the vehicle. An intact wheel may be stored in the spare wheel carrier only when the vehicle is unladen. A laden vehicle must first be raised.

- Carefully place the spare wheel onto spare wheel carrier (4). The spare wheel is heavy. When you place the spare wheel onto spare wheel carrier (4), the centre of gravity changes due to the weight of the wheel. The spare wheel may slip down or tip over.
- Slide the pump lever for the jack into sleeve (5) on spare wheel carrier (4).
- Raise spare wheel carrier (4) with the pump lever and attach right-hand retaining hook (3).
- Slightly raise spare wheel carrier (4) and attach left-hand retaining hook (3).
- Pull the pump lever out of sleeve (5).
- Using the wheel spanner, tighten the bolts for retaining hooks (3) by turning them clockwise.
- Replace and engage covers (1).
- Close the rear-end doors.

REMOVING THE SPARE WHEEL IN THE LOAD COMPARTMENT

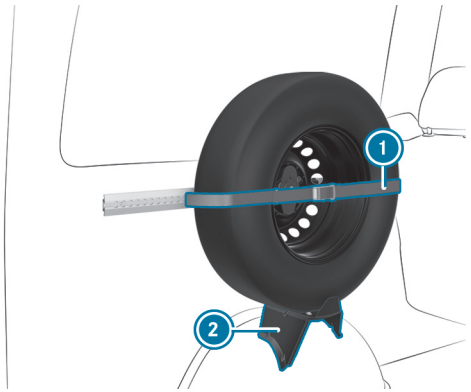

- Release tension belt (1) by opening the ratchet wrench.

- Carefully remove the spare wheel from holder (2).

FITTING THE SPARE WHEEL IN THE LOAD COMPARTMENT

- Place the spare wheel into holder (2) and hold it against the wall.
- Tighten tension belt (1) using the ratchet wrench.

VEHICLES WITH REAR WHEEL DRIVE: REMOVING THE SPARE WHEEL (CHASSIS)

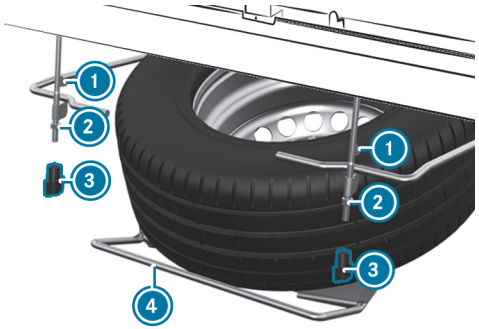

- Loosen thumb nuts (3) manually and remove them.
- Loosen nuts (2) as far as the thread end.
- Slightly raise spare wheel carrier (4) and unhook left-hand retaining hook (1).
- Assemble the pump lever for the jack and slide it into the sleeve on the right-hand side of spare wheel carrier (4).
- Raise spare wheel carrier (4) with the pump lever and unhook right-hand retaining hook (1).
- Slowly lower spare wheel carrier (4) to the ground.
- Lift spare wheel carrier (4) slightly and pull the pump lever out of the sleeve.
- Use the pump lever to lift the spare wheel beyond the rear edge of the spare wheel carrier.
- Carefully remove the spare wheel from the spare wheel carrier. The spare wheel is heavy. When the spare wheel is removed, the centre of gravity changes due to the heavy weight of the wheel. The spare wheel may slip down or tip over.

VEHICLES WITH REAR WHEEL DRIVE: FITTING THE SPARE WHEEL (CHASSIS)

- Carefully place the spare wheel onto spare wheel carrier (4). The spare wheel is heavy. When you place the spare wheel onto the spare wheel carrier, the centre of gravity changes due to the weight of the wheel. The spare wheel may slip down or tip over.
- Slide the pump lever for the jack into the sleeve on spare wheel carrier (4).
- Raise spare wheel carrier (4) with the pump lever and attach right-hand retaining hook (1).
- Slightly raise the spare wheel carrier and attach left-hand retaining hook (1).
- Pull the pump lever out of the sleeve.
- Tighten nuts (2).
- Put thumb nuts (3) in place and tighten them.

Back to Contents

Technical data

This interactive PDF works like a website – tap or click a button to jump straight to where you want to go.
You can return here at any time via the navigation bar at the top left.

Information on the technical data
On-board electronics
Radio regulations
Vehicle identification plate, vehicle identification number (VIN) and engine number
Operating fluids and capacities
Notes on vehicle data
Trailer hitch
Lashing points and carrier systems

Information on the technical data

You will find information on technical data in the printed Owner's Manual.

On-board electronics

Notes on work on the engine electronics

NOTE
Premature wear through improper maintenance

Improper maintenance may cause vehicle components to wear more quickly and the vehicle's operating permit may be invalidated.

► Always have work on the engine electronics and related components carried out at a qualified specialist workshop.

Two-way radios

INSTALLATION NOTES FOR TWO-WAY RADIOS

WARNING
Risk of accident due to improper work on two-way radios

If two-way radios are manipulated or retrofitted incorrectly, the electromagnetic radiation from the two-way radios can interfere with the vehicle electronics and jeopardise the operating safety of the vehicle.

► You should have all work on electrical and electronic components carried out at a qualified specialist workshop.

WARNING
Risk of accident due to improper operation of two-way radios

If you use two-way radios in the vehicle improperly, their electromagnetic radiation can disrupt the vehicle's electronics. This is the case in the following situations, in particular:

- The two-way radio is not connected to an exterior aerial.
- The exterior aerial is fitted incorrectly or is not a low-reflection aerial.

This could jeopardise the operating safety of the vehicle.

► Have the low-reflection exterior aerial fitted at a qualified specialist workshop.

► When operating two-way radios in the vehicle, always connect them to the low-reflection exterior aerial.

NOTE
Invalidation of the operating permit due to failure to comply with the instructions for installation and use

The operating permit may be invalidated if the instructions for installation and use of two-way radios are not observed.

- Only use approved frequency bands.
- Observe the maximum permissible output power in these frequency bands.
- Only use approved aerial positions.

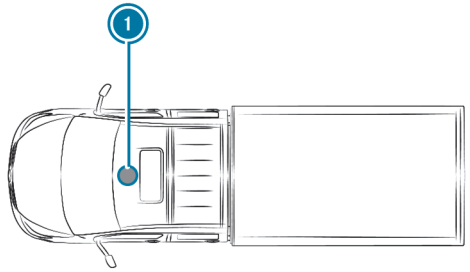

Platform vehicle (crewcab)

1 Front roof area

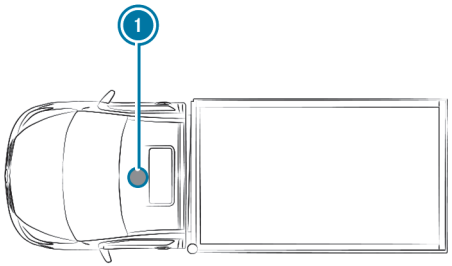

Platform vehicle (standard cab)

1 Front roof area

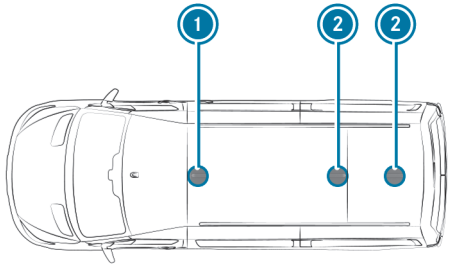

Panel Van

1 Front roof area

2 Rear roof area

Use Technical Specification ISO/TS 21609 (Road Vehicles - EMC guidelines for installation of aftermarket radio frequency transmitting equipment) when retrofitting two-way radios. Comply with the legal requirements for detachable parts.

If your vehicle has pre-installation for two-way radio equipment, use the power supply or aerial connections intended for use with the pre-installation. Observe the manufacturer's supplements during installation.

TRANSMISSION OUTPUT OF TWO-WAY RADIOS

The maximum transmission outputs (PEAK) at the base of the aerial must not exceed the values in the following table:

FREQUENCY BAND AND MAXIMUM TRANSMISSION OUTPUT

Frequency band	Maximum transmission output
2 -m- frequency band 144 – 174 MHz	50 W
4-m-frequency band 74 – 88 MHz	30 W
Terrestrial Trunked Radio (TETRA) 380 – 460 MHz	10 W
Mobile telephony 2G	2 W
Mobile telephony 3G/4G/5G	0.5 W

THERE ARE NO RESTRICTIONS ON USE OF THE FOLLOWING DEVICES IN THE VEHICLE:

- Two-way radios with a maximum transmission output of up to 100 mW
- Two-way radios with transmitter frequencies in the 380 - 410 MHz frequency band and a maximum transmission output of up to 2 W (trunked radio system/Tetra)
- Mobile phones (2G/3G/4G/5G)

THERE ARE NO RESTRICTIONS ON POSITIONING THE AERIAL ON THE OUTSIDE OF THE VEHICLE FOR THE FOLLOWING FREQUENCY BANDS:

- Terrestrial Trunked Radio (TETRA)
- 2G/3G/4G/5G

Radio regulations

Specific information on wireless applications in accordance with 2014/53/EU

TYPE OF WIRELESS APPLICATION AND SPECIFICATION IN ACCORDANCE WITH 2014/53/EU

Besides the typical frequencies for mobile communication cars by Mercedes-Benz make use of the following automotive radio applications.

TYPE OF WIRELESS APPLICATION AND SPECIFICATION IN ACCORDANCE WITH 2014/53/EU

Technology	Frequency range	Transmission output/magnetic field strength
Remote Keyless Entry	20 kHz (9–90 kHz)	≤ 72 dBµA/m at 10m
Wireless Power Transmission	105 kHz (90–119 kHz)	≤ 42 dBµA/m at 10m
Remote Keyless Entry	120 kHz (119–135 kHz)	≤ 42 dBµA/m at 10m
Wireless Power Transmission	127 kHz (119–135 kHz)	≤ 66 dBµA/m at 10m with the magnetic field strength level decreasing 3dB/octave above 119 kHz
Near-field communication	13.553–13.567 MHz	≤ 42 dBµA/m at 10m
Remote Keyless Entry, Garage Door Opener, Tire Pressure Monitoring	433 MHz (433.05–434.79 MHz)	≤ 10 mW ERP
Block Heater Remote Control, Garage Door Opener	868 MHz (868.0–868.6 MHz)	≤ 25 mW ERP
Block Heater Remote Control, Garage Door Opener	869 MHz (868.7–869.2 MHz)	≤ 25 mW ERP
Bluetooth, Kleer, RLAN, wireless Headphones	2.4 GHz ISM band (2400–2483.5 MHz)	≤ 100 mW EIRP

Technology	Frequency range	Transmission output/magnetic field strength
RLAN	5.1 GHz UNII-1 (5150–5250 MHz)	≤ 25 mW EIRP
Interior Monitoring Radar, RLAN	5.8 GHz UNII-3 (5725–5875 MHz)	≤ 25 mW EIRP
Remote Keyless Entry	7.25 GHz UWB (6.0–8.5 GHz)	≤ -41.3 dBm/MHz EIRP mean ≤ 0 dBm/MHz EIRP peak
76 GHz radar	76–77 GHz	≤ 55 dBm peak EIRP
Hermes (communication module)	GSM: EGSM900, Class 4 GSM: EGSM1800, Class 1 GSM: EGSM900 8-PSK, Class E2 GSM: EGSM1800 8-PSK, Class E2	< +33 dBm (±2 dB) < +30 dBm (±2 dB < +27 dBm (±3 dB) < +26 dBm (±3 dB/-4 dB)
	UMTS 2100: WCDMA FDD B 1, Class 3	< +24 dBm (±1 dB/-3 dB)
	LTE: FDD BI/BIII, Class 3 LTE: TDD B38/B39/B40/B41, Class 3	< +23 dBm (±2 dB)
Onboard Logic Unit (OLU)	GSM 900 (880–915 MHz / 925–960 MHz)	33 dBm (2 W)
	GSM 1800 (1710–1785 MHz / 1805–1880 MHz)	30 dBm (1 W)
	WCDMA FDDI (1920–1980 MHz / 2110–2170 MHz)	24 dBm (0.25 W)
	WCDMA FDDVIII (880–915 MHz / 925–960 MHz)	24 dBm (0.25 W)
	LTE FDD1 (1920–1980 MHz / 2110–2170 MHz)	23 dBm (0.2 W)
	LTE FDD3 (1710–1785 MHz / 1805–1880 MHz)	23 dBm (0.2 W)
	LTE FDD7 (2500–2570 MHz / 2620–2690 MHz)	23 dBm (0.2 W)
	LTE FDD8 (880–915 MHz / 925–960 MHz)	23 dBm (0.2 W)
	LTE FDD20 (832–862 MHz / 791–821 MHz)	23 dBm (0.2 W)
	LTE TDD38 (2570–2620 MHz / 2570–2620 MHz)	23 dBm (0.2 W)

Further information and updates are available at the following web address:

https://regulatoryradioinformation.corpinter.net/vans/vans/en

Regulatory radio identifiers and specific information

The tables and sections contain the following regulatory radio information:

- Manufacturer information
- Required regulatory radio identifiers, listed by country/region:
  - Manufacturer's specifications
  - Model designations
  - Radio equipment approval numbers
- Specific information on wireless vehicle components

Further information and updates are available at the following web address:

https://regulatoryradioinformation.corpinter.net/vans/vans/en

MANUFACTURER OVERVIEW

Manufacturer	Manufacturer information
Continental ADC	Continental - ADC Automotive Distance Control Systems GmbH, Peter-Dornier-Straße 10, 88131 Lindau, Germany
Bosch	Robert Bosch GmbH, Daimlerstraße 6, 71229 Leonberg, Germany
Continental Automotive	Continental Automotive GmbH, Siemensstraße 12, 93055 Regensburg, Germany
Continental Automotive Technologies	Continental Automotive Technologies GmbH, VDO-Straße 1, 64832 Babenhausen, Germany
Garmin	Garmin International, Inc., 1200 E. 151st Street, Olathe, Kansas 66062, United States
Harman Becker	Harman Becker Automotive Systems GmbH, Becker-Goehring-Straße 18, 76307 Karlsbad, Germany
HELLA	HELLA KGaA Hueck & Co., Rixbecker Straße 75, 59552 Lippstadt, Germany
Hirschmann	Hirschmann Car Communication GmbH, Stuttgarter Straße 45-51, 72654 Neckartenzlingen, Germany
Huf Baolong	Huf Baolong Electronics Bretten GmbH, Gewerbestraße 40, 75015 Bretten, Germany
MARQUARDT	MARQUARDT GmbH, Schloßstraße 16, 78604 Rietheim-Weilheim, Germany
Meta System	Meta System S.P.A., Via T. Galimberti 5, 42124 Reggio Emilia, Italy
Molex Technologies	Molex Technologies GmbH, Mizarstraße 3, 12529 Schönefeld, Germany

Manufacturer	Manufacturer information
Schrader	Schrader Electronics Ltd., 11 Technology Park, Belfast Road, Antrim BT41 1QS, Northern Ireland, United Kingdom
Veoneer	Veoneer Sweden AB, Wallentinsvägen 22, 44737 Vårgårda, Sweden
Visteon	Visteon Electronics GmbH, Amalienbadstraße 41a, 76227 Karlsruhe, Germany
Vitesco	Vitesco Technologies GmbH, Siemensstrasse 12, 93055 Regensburg Germany
WITTE-Velbert	WITTE-Velbert GmbH & Co. KG, Hoeferstr. 3-15, 42551 Velbert, Germany

ALGERIA

Agréé par l'ANF
Référence du Certificat de conformité

Homologué par l'ARPCE
Référence du Certificat de conformité

REGULATORY RADIO IDENTIFIERS

Manufacturer	Model designation	Radio equipment approval number
Continental Automotive	MARS Keyless (locking system)	168/H/ANF/2024
HELLA	DM4 (locking system)	123/H/ANF/2021
Hirschmann	920510A (locking system)	4001/1.69-DA/3005/DT/DG/ARPT/17
Huf Baolong	TSSRE4A (tyre pressure sensor)	198/H/ANF/2021
Huf Baolong	TSSSG4G6b (tyre pressure monitoring system control unit)	67/H/ANF/2021
MARQUARDT	DC12B (locking system)	189/H/ANF/2021

ARGENTINA

REGULATORY RADIO IDENTIFIERS

R		
Manufacturer	**Model designation**	**Radio equipment approval number**
Continental ADC	SRR6-A (control unit)	H-30005
Continental Automotive	MARS Keyless (locking system)	H-17929
Continental Automotive Technologies	NTG7Q MID LF2 (head unit)	C-29127
Continental Automotive Technologies	NTG7Q HIGH LF2 (head unit)	C-29126

Manufacturer	Model designation	Radio equipment approval number
Continental Automotive Technologies	NTG7Q PREMIUM LF2 (head unit)	C-29128
Continental Automotive Technologies	NTG7Q PREMIUMPLUS LF2 (head unit)	C-29930
HUF	HUF13482 (locking system)	H-31125
Huf Baolong	TSSRE4A (tyre pressure sensor)	H-20027
Hirschmann	920510A (locking system)	H-21033
MARQUARDT	DC12B (locking system)	H-21034
MARQUARDT	MS2 (locking system)	H-17598
Schrader	HSW4T (tyre pressure sensor)	H-12336
Vitesco	HFA30 (radar sensor)	H-30148

AUSTRALIA

REGULATORY RADIO IDENTIFIERS

Manufacturer	Model designation
Continental ADC	SRR6-A (control unit)
Bosch	MRR1Rear (radar sensor)
Bosch	MRRe14FCR (radar sensor)
Bosch	FR5CPCCF (radar sensor)
Bosch	F5CP12 (radar sensor)
Continental Automotive	MARS Keyless (locking system)
Continental Automotive Technologies	NTG7Q MID LF2 (head unit)
Continental Automotive Technologies	NTG7Q HIGH LF2 (head unit)
Continental Automotive Technologies	NTG7Q PREMIUM LF2 (head unit)
HUF	HUF13145 (locking system)
Huf Baolong	TSSRE4Uf (tyre pressure sensor)
Huf Baolong	TSSSG4G6b (tyre pressure monitoring system control unit)

BAHAMAS

REGULATORY RADIO IDENTIFIERS

Manufacturer	Model designation	Radio equipment approval number
Bosch	MRR1Rear (radar sensor)	URCA_TA/2017_184
Bosch	MRRe14FCR (radar sensor)	URCA_TA/2017_157
Bosch	FR5CPCCF (radar sensor)	URCA_TA_2019_195
Bosch	F5CP12 (radar sensor)	URCA_TA_2022_077
Continental Automotive	MARS Keyless (locking system)	URCA_TA/2017_119

Manufacturer	Model designation	Radio equipment approval number
HELLA	DM4 (locking system)	URCA_TA/2017_078
Hirschmann	920510A (locking system)	URCA_TA/2019_019
Huf Baolong	TSSRE4A (tyre pressure sensor)	URCA_TA/2017_094
MARQUARDT	DC12B (locking system)	URCA_TA_2019_128
MARQUARDT	MS2 (locking system)	URCA_TA/2017_021
Vitesco	HFA30 (radar sensor)	URCA_TA_2023_247

BELARUS

REGULATORY RADIO IDENTIFIERS

Manufacturer	Model designation
Bosch	MRR1Rear (radar sensor)
Bosch	MRRe14FCR (radar sensor)
Bosch	FR5CPCCF (radar sensor)
Bosch	F5CP12 (radar sensor)
Continental Automotive	MARS Keyless (locking system)
HELLA	DM4 (locking system)
Huf Baolong	TSSRE4A (tyre pressure sensor)
Huf Baolong	TSSRE4Uf (tyre pressure sensor)
Huf Baolong	TSSSG4G6b (tyre pressure monitoring system control unit)
MARQUARDT	DC12B (locking system)
MARQUARDT	MS2 (locking system)

BOTSWANA

REGULATORY RADIO IDENTIFIERS

Manufacturer	Model designation	Radio equipment approval number
Bosch	MRRe14FCR (radar sensor)	BOCRA/TA/2019/4674
Bosch	FR5CPCCF (radar sensor)	BOCRA/TA/2019/4975
Bosch	MRR1Rear (radar sensor)	BOCRA/TA/2017/3788
Bosch	F5CP12 (radar sensor)	BOCRA/TA/2022/7110
Continental Automotive	MARS Keyless (locking system)	BOCRA/TA/2019/4661
HELLA	DM4 (locking system)	BOCRA/TA/2019/4662
Huf Baolong	TSSRE4Uf (tyre pressure sensor)	BOCRA/TA/2019/5079
MARQUARDT	DC12B (locking system)	BOCRA/TA/2019/4388
MARQUARDT	MS2 (locking system)	BOCRA/TA/2019/5135

BRAZIL

Note on the two-way radio systems in the vehicle:

These systems are not protected against harmful interference and must not cause interference in properly approved systems.

REGULATORY RADIO IDENTIFIERS

Manufacturer	Model designation	Radio equipment approval number
Continental ADC	SRR6-A (control unit)	00512-24-02496
Continental Automotive	MARS Keyless (locking system)	03189-17-02856
Continental Automotive Technologies	NTG7Q MID LF2 (head unit)	12520-23-06353
Continental Automotive Technologies	NTG7Q HIGH LF2 (head unit)	12525-23-06353
Continental Automotive Technologies	NTG7Q PREMIUM LF2 (head unit)	12522-23-06353
Continental Automotive Technologies	NTG7Q PREMIUMPLUS LF2 (head unit)	17830-23-06353
HELLA	DM4 (locking system)	04689-17-05364
Hirschmann	920510A (locking system)	20595-22-08058
HUF	HUF13482 (locking system)	07889-24-06643
Huf Baolong	TSSRE4A (tyre pressure sensor)	05181-17-06643
Huf Baolong	TSSRE4Uf (tyre pressure sensor)	07137-19-08137
MARQUARDT	DC12B (locking system)	01395-11-02930
MARQUARDT	MS2 (locking system)	00616-17-02930
Molex Technologies	HUB-8 (charger for mobile phones)	19286-23-12116
Vitesco	HFA30 (radar sensor)	18924-23-15869

Other specific information

Charging unit for the wireless charging of mobile devices (WMI):

This device works in secondary mode, which means that it has no protection against harmful interference, not even from stations of the same type, and must not cause any interference with systems that work in primary mode.

This product is approved in accordance with the procedures specified in Directive 242/2000 by the Brazilian National Telecommunications Agency ANATEL and meets the valid technical requirements.

Further information is available on the ANATEL website. www.anatel.gov.br

BRUNEI DARUSSALAM

REGULATORY RADIO IDENTIFIERS

Manufacturer	Model designation	Radio equipment approval number
Bosch	FR5CPCCF (radar sensor)	DTA-004222
Bosch	LRR3 (radar sensor)	DTA-011039

Manufacturer	Model designation	Radio equipment approval number
Bosch	MRR1Rear (radar sensor)	DTA-006601
Bosch	MRRe14FCR (radar sensor)	DTA-006678
Bosch	F5CP12 (radar sensor)	DTA-018042
Continental Automotive	MARS Keyless (locking system)	DTA-017264
HELLA	DM4 (locking system)	DTA-020187
Hirschmann	920510A (locking system)	DTA-000718
Huf Baolong	TSSRE4A (tyre pressure sensor)	DTA-000310
Huf Baolong	TSSRE4Uf (tyre pressure sensor)	DTA-021806
Huf Baolong	TSSSG4G6b (tyre pressure monitoring system control unit)	DTA-003757
MARQUARDT	DC12B (locking system)	DTA-000068
MARQUARDT	MS2 (locking system)	LPD-38890
Vitesco	HFA30 (radar sensor)	DTA-030296

EURASIAN ECONOMIC UNION

REGULATORY RADIO IDENTIFIERS

Manufacturer	Model designation
Continental ADC	SRR6-A (control unit)
Bosch	FR5CPCCF (radar sensor)
Bosch	LRR3 (radar sensor)
Bosch	MRR1Rear (radar sensor)
Bosch	MRRe14FCR (radar sensor)
Bosch	F5CP12 (radar sensor)
Continental Automotive	MARS Keyless (locking system)
HELLA	DM4 (locking system)
Hirschmann	920510A (locking system)
HUF	HUF13482 (locking system)
Huf Baolong	TSSRE4A (tyre pressure sensor)
Huf Baolong	TSSRE4Uf (tyre pressure sensor)
Huf Baolong	TSSSG4G6b (tyre pressure monitoring system control unit)
MARQUARDT	DC12B (locking system)
MARQUARDT	MS2 (locking system)

GHANA

REGULATORY RADIO IDENTIFIERS

Manufacturer	Model designation	Radio equipment approval number
		NCA APPROVED
Continental ADC	SRR6-A (control unit)	M1-7E8-X3F-SRH
Bosch	FR5CPCCF (radar sensor)	ZRO-M8-7E3-230
Bosch	F5CP12 (radar sensor)	7E6-M1-X9B-SRD
Continental Automotive	MARS Keyless (locking system)	BR3-1M-GE2-16A
Continental Automotive Technologies	NTG7Q MID LF2 (head unit)	7M-7E7-X09-DSR
Continental Automotive Technologies	NTG7Q HIGH LF2 (head unit)	7M-7E7-X05-DSR
Continental Automotive Technologies	NTG7Q PREMIUM LF2 (head unit)	7M-7E7-X03-DSR
HELLA	DM4 (locking system)	BR3-1M-GE2-157
Hirschmann	920510A (locking system)	M1-7E8-X6ASRH
Huf Baolong	TSSRE4A (tyre pressure sensor)	SR0-1M-7E4-24B
Huf Baolong	TSSRE4Uf (tyre pressure sensor)	7E5-7M-XCB-RDR
MARQUARDT	DC12B (locking system)	ZRO-M8-7E3-X51
MARQUARDT	MS2 (locking system)	BR3-1M-GE-129
Vitesco	HFA30 (radar sensor)	7M-7E7-134-DSR

INDONESIA

⚠ Dilarang melakukan perubahan spesifikasi yang dapat menimbulkan gangguan fisik dan/atau elektromagnetik terhadap lingkungan sekitarnya

REGULATORY RADIO IDENTIFIERS

Manufacturer	Model designation	Radio equipment approval number
Continental ADC	SRR6-A (control unit)	98748/SDPPI/2024 7163
Continental ADC	ARS3-A (radar sensor)	97128/SDPPI/2024 7163
Continental ADC	ARS3-B (radar sensor)	97129/SDPPI/2024 7163
Continental ADC	ARS4-B (radar sensor)	97127/ SDPPI/ 2024 7163
Bosch	LRR3 (radar sensor)	74264/SDPPI/2021 7163
Bosch	MRR1Rear (radar sensor)	74267/SDPPI/2021 7163
Bosch	MRRevo14F (radar sensor)	74265/SDPPI/2021 7163

Manufacturer	Model designation	Radio equipment approval number
Bosch	MRRe14FCR (radar sensor)	74266/SDPPI/2021 7163
Bosch	FR5CPCCF (radar sensor)	67882/SDPPI/2020 7163
Bosch	F5CP12 (radar sensor)	86858/SDPPI/2022 84754
Continental Automotive	MARS Keyless (locking system)	69379/SDPPI/2020 7163
Continental Automotive Technologies	NTG7Q MID LF2 (head unit)	88477/SDPPI/2023 7163
Continental Automotive Technologies	NTG7Q HIGH LF2 (head unit)	88579/SDPPI/2023 7163
Continental Automotive Technologies	NTG7Q PREMIUM LF2 (head unit)	88478/SDPPI/2023 7163
Garmin	VIS (head unit)	69984/SDPPI/2020 7163
Harman Becker	NTG6N ENTRY/MID (head unit) Production: Germany	64019/SDPPI/2019 7163

Manufacturer	Model designation	Radio equipment approval number
Harman Becker	NTG6N HIGH (head unit) Production: Germany	64018/SDPPI/2019 7163
Harman Becker	NTG6N ENTRY/MID (head unit) Production: Hungary	63775/SDPPI/2019 7163
Harman Becker	NTG6N HIGH (head unit) Production: Hungary	63774/SDPPI/2019 7163
Harman Becker	NTG7 MID (head unit)	65544/SDPPI/2020 7163
Harman Becker	NTG7 HIGH (head unit)	70513/SDPPI/2020 7163
Harman Becker	NTG7 PREMIUM (head unit)	65543/SDPPI/2020 7163
Harman Becker	NTG7 PREMIUM PLUS (head unit)	70512/SDPPI/2020 7163
Harman Becker	NTG7 RSU (control unit)	66387/SDPPI/2020 7163
Hirschmann	920510A (locking system)	81434/SDPPI/2022 7163
HELLA	DM4 (locking system)	69378/SDPPI/2020 7163

Manufacturer	Model designation	Radio equipment approval number
HUF	HUF13482 (locking system)	104103/SDPPI/2024 7163
Huf Baolong	TSSRE4A (tyre pressure sensor)	72438/SDPPI/2021 7163
MARQUARDT	DC12B (locking system)	59840/SDPPI/2019 7163
MARQUARDT	MS2 (locking system)	67372/SDPPI/2020 7163
MARQUARDT	DD1 (Fond Seat Module)	98171/ SDPPI/ 2024 7163
MARQUARDT	DE1 (Fond Seat Module)	97584/ SDPPI/ 2024 7163
Schrader	MC34MA4 (tyre pressure monitoring system control unit)	25626/SDPPI/2015 3612
Visteon	Connect 5 (head unit)	61671/SDPPI/2019 7163

ISRAEL

REGULATORY RADIO IDENTIFIERS

Manufacturer	Model designation	Radio equipment approval number
		Approval number of the Ministry of Communications:
Continental ADC	SRR6-A (control unit)	Importer no.: 510242670
Bosch	LRR3 (radar sensor)	55-08334
Bosch	MRR1Rear (radar sensor)	55-08333
Bosch	MRRe14FCR (radar sensor)	55-08395
Bosch	FR5CPCCF (radar sensor)	55-08783
Bosch	F5CP12 (radar sensor)	55-12854
Continental Automotive	MARS Keyless (locking system)	55-13749
Continental Automotive Technologies	NTG7Q MID LF2 (head unit)	51-90718
Continental Automotive Technologies	NTG7Q HIGH LF2 (head unit)	51-90717
Continental Automotive Technologies	NTG7Q PREMIUM LF2 (head unit)	51-90719
Harman Becker	NTG7 HIGH-IL (head unit)	51-89476
Harman Becker	NTG7 PREMIUMPLUS-IL (head unit)	51-89475
HELLA	DM4 (locking system)	55-14271

Manufacturer	Model designation	Radio equipment approval number
Huf Baolong	TSSRE4A (tyre pressure sensor)	63-66757
Huf Baolong	TSSRE4Uf (tyre pressure sensor)	63-66757
Huf Baolong	TSSSG4G6b (tyre pressure monitoring system control unit)	63-68102
MARQUARDT	DC12B (locking system)	55-12215
MARQUARDT	MS2 (locking system)	51-85192
WITTE-Velbert	SDHTAG3NFC (locking system)	55-12216
Vitesco	HFA30 (radar sensor)	56-01011

JAMAICA

REGULATORY RADIO IDENTIFIERS

Manufacturer	Model designation
Continental Automotive	MARS Keyless (locking system)
HELLA	DM4 (locking system)
Hirschmann	920510A (locking system)
Huf Baolong	TSSRE4A (tyre pressure sensor)
Huf Baolong	TSSRE4Uf (tyre pressure sensor)
Huf Baolong	TSSSG4G6b (tyre pressure monitoring system control unit)
MARQUARDT	DC12B (locking system)
MARQUARDT	MS2 (locking system)
Vitesco	HFA30 (radar sensor)

JAPAN

REGULATORY RADIO IDENTIFIERS

Manufacturer	Model designation	Radio equipment approval number
Continental Automotive Technologies	NTG7Q HIGH LF2 (head unit)	003-230113
Continental Automotive Technologies	NTG7Q PREMIUM LF2 (head unit)	003-230112
Vitesco	HFA30 (radar sensor)	209-J00495

JORDAN

REGULATORY RADIO IDENTIFIERS

Manufacturer	Model designation	Radio equipment approval number
Continental ADC	SRR6-A (control unit)	TRC/34/13029/2023

CANADA

REGULATORY RADIO IDENTIFIERS

Manufacturer	Model designation	Radio equipment approval number
Continental ADC	SRR6-A (control unit)	IC: 4135A-SRR6A
Continental Automotive Technologies	NTG7Q MID LF2 (head unit)	IC: NTG7QMIDLF2
Continental Automotive Technologies	NTG7Q HIGH LF2 (head unit)	IC: NTG7QHIGLF2
Continental Automotive Technologies	NTG7Q PREMIUM LF2 (head unit)	IC: NTG7QPREF2
Hirschmann	920510A (locking system)	IC:8653A-920510A
Huf Baolong	TSSRE4A (tyre pressure sensor)	IC: 4008C-TSSRE4A
Huf Baolong	TSSRE4Uf (tyre pressure sensor)	IC: 3702A-TSSRE4UF
Vitesco	HFA30 (radar sensor)	28616-HFA30

Information on installation clearances

Charging unit for the wireless charging of mobile devices (WMI):

The charging unit for the wireless charging of mobile devices (WMI) complies with the FCC and IC radiation exposure limits that have been defined for an uncontrolled environment. This equipment must be installed and operated with a minimum distance of 0 cm (in contact) between the radiation source and your body. This transmitter must not be placed in the same location as, or used at the same time as, another transmitter or antenna.

Radar sensors:

ARS4-C (Continental ADC), ARS4-B (Continental ADC), ARS4-A (Continental ADC), FR5CPCCF (Bosch), MRR1REAR (Bosch), MRREVO14F (Bosch), LRR3 (Bosch), 77V12BSM (Veoneer), 77V12CRN (Veoneer), MMRV1 (Veoneer)

This equipment should be installed and operated with a minimum distance of 20 cm between the radiation source and your body.

Control units:

SRR6-A (Continental ADC)

Information on exposure to high-frequency radiation:

This equipment complies with the FCC radiation exposure limits that have been defined for an uncontrolled environment. This equipment should be installed and operated with a minimum distance of 20 cm between the radiation source and your body. This transmitter must not be placed in the same location as, or operated in conjunction with, any other antenna or transmitter.

KUWAIT

REGULATORY RADIO IDENTIFIERS

Manufacturer	Model designation	Radio equipment approval number
Huf Baolong	TSSRE4A (tyre pressure sensor)	Ref. 5420
Huf Baolong	TSSRE4Uf (tyre pressure sensor)	Ref. 3591
Huf Baolong	TSSSG4G6b (tyre pressure monitoring system control unit)	Ref. 3271
Vitesco	HFA30 (radar sensor)	Ref. 7272

MALAYSIA

REGULATORY RADIO IDENTIFIERS

Manufacturer	Model designation	Radio equipment approval number
Bosch	FR5CPCCF (radar sensor)	CIDF15000490
Bosch	LRR3 (radar sensor)	CIDF15000490
Bosch	MRR1Rear (radar sensor)	CIDF15000490
Bosch	MRRe14FCR (radar sensor)	CIDF15000490
Bosch	MRRevo14F (radar sensor)	CIDF15000490
Bosch	F5CP12 (radar sensor)	RGLN/30A/0522/S(22-2490)
Continental Automotive	MARS Keyless (locking system)	CIDF15000578
Continental Automotive Technologies	NTG7Q MID LF2 (head unit)	RCCT/92G/0423/S(23-0350)
Continental Automotive Technologies	NTG7Q HIGH LF2 (head unit)	CCT/91G/0323/S(23-1291)
Continental Automotive Technologies	NTG7Q PREMIUM LF2 (head unit)	RGQB/05A/0323/S(23-1293)
HELLA	DM4 (locking system)	CIDF15000578
Hirschmann	920510A (locking system)	RFFK/01A/1117/S(17-3581)
HUF	HUF13482 (locking system)	HIDF15000153
Huf Baolong	TSSRE4A (tyre pressure sensor)	HIDF15000153
Huf Baolong	TSSRE4Uf (tyre pressure sensor)	HIDF15000153
MARQUARDT	DC12B (locking system)	RAUU/62A/0311/S(11-0263)
MARQUARDT	MS2 (locking system)	RDDK/31A/0217/S(17-0405)
Vitesco	HFA30 (radar sensor)	RGZK/03A/1223/S(23-5530)

MOROCCO

REGULATORY RADIO IDENTIFIERS

Manufacturer	Model designation	Radio equipment approval number
		AGREE PAR L'ANRT MAROC
Continental ADC	SRR6-A (control unit)	MR 40021 ANRT 2023/09/19
Bosch	FR5CPCCF (radar sensor)	MR 20575 ANRT 2019-07-29
Bosch	LRR3 (radar sensor)	MR 5371 ANRT 2010 2019-12-05
Bosch	MRR1Rear (radar sensor)	MR 9186 ANTR 2014-04-22
Bosch	MRRe14FCR (radar sensor)	MR 13900 ANTR 2017-05-04
Bosch	F5CP12 (radar sensor)	MR00032137ANRT2022
Continental Automotive	MARS Keyless (locking system)	MR 13681 ANTR 2017-04-04
HELLA	DM4 (locking system)	MR 14426 ANTR 2017-07-28

Manufacturer	Model designation	Radio equipment approval number
MARQUARDT	DC12B (locking system)	MR 6698 ANTR 2021-11-04
Hirschmann	920510A (locking system)	MR 14779 ANTR 2017-09-25
Huf Baolong	TSSRE4A (tyre pressure sensor)	AGREE PAR L'ANRT MAROC MR 14320 ANRT 2017 Date d'agrement: 07/07/2017
Huf Baolong	TSSRE4Uf (tyre pressure sensor)	AGREE PAR L'ANRT MAROC MR 20944 ANRT 2019 Date d'agrement: 07/07/2017
MARQUARDT	DC12B (locking system)	AGREE PAR L'ANRT MAROC MR 6698 ANTR 2021 Date d'agrement: 04/11/2021
MARQUARDT	MS2 (locking system)	MR 13300 ANTR 2017-02-15
Schrader	MC34MA4 (tyre pressure monitoring system control unit)	AGREE PAR L'ANRT MAROC MR 6706 ANTR Date d'agrement: 2011-11-17

MEXICO

REGULATORY RADIO IDENTIFIERS

NOM Manufacturer	NYCE Model designation	ANCE Radio equipment approval number
Bosch	LRR3 (radar sensor)	IFETEL: RCPBOLR09-0828
Bosch	MRR1Rear (radar sensor)	IFETEL: RCPBOMR14-0922
Bosch	MRRe14FCR (radar sensor)	IFETEL: RCPBOMR17-0598
Continental Automotive	MARS Keyless (locking system)	IFETEL: RLVDAMA18-1827
Continental Automotive Technologies	NTG7Q MID LF2 (head unit)	IFETEL: MEMENT23 - 12200
Continental Automotive Technologies	NTG7Q HIGH LF2 (head unit)	IFETEL: MEMENT23 - 11923
Continental Automotive Technologies	NTG7Q PREMIUM LF2 (head unit)	IFETEL: MEMENT23 - 12204
HELLA	DM4 (locking system)	IFETEL: RLVHEDM17-10
Hirschmann	920510A (locking system)	IFETEL: RLVHI9217-1754
HUF	HUF13482 (locking system)	IFETEL: MEHUHU24-25903
Huf Baolong	TSSRE4A (tyre pressure sensor)	IFETEL: RLVBHTS19-1995
MARQUARDT	DC12B (locking system)	IFETEL: RLVMContinental ADC11-0446
MARQUARDT	MS2 (locking system)	IFETEL: RLVMAMS17-0222
Schrader	MC34MA4 (tyre pressure monitoring system control unit)	IFETEL: RCPSCMR14-062
Vitesco	HFA30 (radar sensor)	IFETEL: ROVIHF24-02919

MONGOLIA

REGULATORY RADIO IDENTIFIERS

Manufacturer	Model designation	Radio equipment approval number
Continental Automotive	MARS Keyless (locking system)	A18000328
HELLA	DM4 (locking system)	A18000329
Huf Baolong	TSSRE4A (tyre pressure sensor)	A19000569
Huf Baolong	TSSSG4G6b (tyre pressure monitoring system control unit)	A21000451
MARQUARDT	DC12B (locking system)	A19000371
MARQUARDT	MS2 (locking system)	A18000289
Vitesco	HFA30 (radar sensor)	A23001126

NIGER

REGULATORY RADIO IDENTIFIERS

Manufacturer	Model designation	Radio equipment approval number
Continental Automotive	MARS Keyless (locking system)	083/ARCEP/DG/19
HELLA	DM4 (locking system)	082/ARCEP/DG/19
MARQUARDT	DC12B (locking system)	008/ARCEP/DG/19
MARQUARDT	MS2 (locking system)	014/ARCEP/DG/19

NIGERIA

REGULATORY RADIO IDENTIFIERS

Manufacturer	Model designation
Continental ADC	SRR6-A (control unit)
Bosch	FR5CPCCF (radar sensor)
Bosch	MRR1Rear (radar sensor)
Bosch	MRRe14FCR (radar sensor)
Bosch	F5CP12 (radar sensor)
Continental Automotive	MARS Keyless (locking system)
HELLA	DM4 (locking system)
Hirschmann	920510A (locking system)
Huf Baolong	TSSRE4Uf (tyre pressure sensor)
Huf Baolong	TSSSG4G6b (tyre pressure monitoring system control unit)
MARQUARDT	DC12B (locking system)
MARQUARDT	MS2 (locking system)
Vitesco	HFA30 (radar sensor)

OMAN

REGULATORY RADIO IDENTIFIERS

Manufacturer	Model designation	Radio equipment approval number
Continental ADC	SRR6-A (control unit)	TRA/TA-R/16591/23
Bosch	FR5CPCCF (radar sensor)	TRA/TA-R/7983/19 D172338
Bosch	LRR3 (radar sensor)	TRA/TA-R/1049/09
Bosch	MRR1Rear (radar sensor)	TRA/TA-R/1849/14
Bosch	MRRe14FCR (radar sensor)	TRA/TA-R/4353/17
Bosch	F5CP12 (radar sensor)	TRA/TA-R/13339/22
Continental Automotive	MARS Keyless (locking system)	TRA/TA-R/4158/17 D080134
HELLA	DM4 (locking system)	TRA/TA-R/4548/17 D080134
Hirschmann	920510A (locking system)	TRA/TA-R/4748/17 D080134
HUF	HUF13482 (locking system)	TRA/TA-R/18930/24
Huf Baolong	TSSRE4Uf (tyre pressure sensor)	TRA/TA-R/8240/19
MARQUARDT	DC12B (locking system)	TRA/TA-R/0227/11 D080353
Vitesco	HFA30 (radar sensor)	TRA/TA-R/17028/23 172338D

PAKISTAN

REGULATORY RADIO IDENTIFIERS

Manufacturer	Model designation	Radio equipment approval number
Continental ADC	SRR6-A (control unit)	TAC NO: 9.669/2024
Bosch	FR5CPCCF (radar sensor)	TAC NO: 9.198/2020
Bosch	F5CP12 (radar sensor)	TAC NO: 9.243/2023
Continental Automotive	MARS Keyless (locking system)	TAC NO: 9.213/2017
HELLA	DM4 (locking system)	TAC NO: 9.409/2017
Hirschmann	920510A (locking system)	TAC NO: 9.287/2020
Huf Baolong	TSSRE4A (tyre pressure sensor)	TAC NO: 9.620/2017
Huf Baolong	TSSRE4Uf (tyre pressure sensor)	TAC NO: 9.9903/2019
Huf Baolong	TSSSG4G6b (tyre pressure monitoring system control unit)	TAC NO: 9.9345/2019
MARQUARDT	DC12B (locking system)	TAC NO: 9.829/2013
MARQUARDT	MS2 (locking system)	TAC NO: 9.133/2017
Vitesco	HFA30 (radar sensor)	TAC NO: 9.1058/2023

PARAGUAY

REGULATORY RADIO IDENTIFIERS

Manufacturer	Model designation	Radio equipment approval number
Continental ADC	SRR6-A (control unit)	2023-11-I-0817
Bosch	FR5CPCCF (radar sensor)	2019-09-I-0508
Bosch	MRRe14FCR (radar sensor)	2017-06-I-0000162
Bosch	MRR1Rear (radar sensor)	2019-05-I-000236
Bosch	F5CP12 (radar sensor)	2019-05-I-000236
Continental Automotive	MARS Keyless (locking system)	2017-05-I-0000136 y
HELLA	DM4 (locking system)	2022-06-I-0388 y 2017-08-I-0000261
Hirschmann	920510A (locking system)	2023-01-I-0058
HUF	HUF13482 (locking system)	2024-08-I-0727
Huf Baolong	TSSRE4A (tyre pressure sensor)	2022-08-I-0528
MARQUARDT	DC12B (locking system)	2021-05-I-0304; 2016-5-I-000144 y 2011-06-I-0067
MARQUARDT	MS2 (locking system)	2021-12-I-0773 y 2017-04-I-0000101
Vitesco	HFA30 (radar sensor)	2023-11-I-0808

PHILIPPINES

REGULATORY RADIO IDENTIFIERS

Manufacturer	Model designation	Radio equipment approval number
Bosch	FR5CPCCF (radar sensor)	ESD-1920531C
Bosch	MRR1Rear (radar sensor)	ESD-1408917C
Bosch	MRRe14FCR (radar sensor)	ESD-1716172C

Manufacturer	Model designation	Radio equipment approval number
Bosch	F5CP12 (radar sensor)	ESD-RCE-2229495
Continental Automotive	MARS Keyless (locking system)	ESD-1714865C
HELLA	DM4 (locking system)	ESD-1715539C
Hirschmann	920510A (locking system)	ESD-1715811C
Huf Baolong	TSSRE4A (tyre pressure sensor)	ESD-1715393C
Huf Baolong	TSSRE4Uf (tyre pressure sensor)	ESD-1920803C
MARQUARDT	DC12B (locking system)	ESD-1105216C
MARQUARDT	MS2 (locking system)	ESD-1715652C
Vitesco	HFA30 (radar sensor)	ESD-RCE-2335375

ZAMBIA

REGULATORY RADIO IDENTIFIERS

Manufacturer	Model designation	Radio equipment approval number
Continental ADC	SRR6-A (control unit)	ZMB/ZICTA/TA2023/11/37
Continental Automotive	MARS Keyless (locking system)	ZMB/ZICTA/TA/2019/3/3
HELLA	DM4 (locking system)	ZMB/ZICTA/TA/2019/3/4
MARQUARDT	DC12B (locking system)	ZMB/ZICTA/TA/2019/5/17
MARQUARDT	MS2 (locking system)	ZMB/ZICTA/TA/2018/9/30

SENEGAL

AGREE PAR ARTP SENEGAL

Numéro d'agrément : XXXXXX/AG/ER

REGULATORY RADIO IDENTIFIERS

Manufacturer	Model designation	Radio equipment approval number
Continental ADC	SRR6-A (control unit)	072710/AG/ER
Continental Automotive Technologies	NTG7Q MID LF2 (head unit)	072486/AG/ER
Continental Automotive Technologies	NTG7Q HIGH LF2 (head unit)	072487/AG/ER
Continental Automotive Technologies	NTG7Q PREMIUM LF2 (head unit)	072488/AG/ER

Manufacturer	Model designation	Radio equipment approval number
Continental Automotive Technologies	NTG7Q PREMIUMPLUS LF2 (head unit)	072689/AG/ER
HUF	HUF13482 (locking system)	072954/AG/ER

SERBIA

REGULATORY RADIO IDENTIFIERS

Manufacturer	Model designation	Radio equipment approval number
Continental ADC	SRR6-A (control unit)	038 23
Bosch	FR5CPCCF (radar sensor)	011 19
Bosch	LRR3 (radar sensor)	011 19
Bosch	MRR1Rear (radar sensor)	011 17
Bosch	MRRe14FCR (radar sensor)	005 17
Continental Automotive	MARS Keyless (locking system)	005 20
Continental Automotive Technologies	NTG7Q MID LF2 (head unit)	005 23
Continental Automotive Technologies	NTG7Q HIGH LF2 (head unit)	005 23
Continental Automotive Technologies	NTG7Q PREMIUM LF2 (head unit)	005 23
HELLA	DM4 (locking system)	005 20
Hirschmann	920510A (locking system)	005 20
HUF	HUF13482 (locking system)	005 24
Huf Baolong	TSSRE4A (tyre pressure sensor)	005 23
Huf Baolong	TSSRE4Uf (tyre pressure sensor)	005 22
Huf Baolong	TSSSG4G6b (tyre pressure monitoring system control unit)	005 22
MARQUARDT	DC12B (locking system)	005 20
MARQUARDT	MS2 (locking system)	011 17
Vitesco	HFA30 (radar sensor)	011

SINGAPORE

REGULATORY RADIO IDENTIFIERS

Manufacturer	Model designation	Radio equipment approval number
		Complies with IMDA Standards
Continental ADC	SRR6-A (control unit)	DB103365
Bosch	FR5CPCCF (radar sensor)	DA105282
Bosch	LRR3 (radar sensor)	DB101762

Manufacturer	Model designation	Radio equipment approval number
Bosch	MRR1Rear (radar sensor)	DA105282
Bosch	MRRevo14F (radar sensor)	DA103365
Bosch	MRRe14FCR (radar sensor)	DB03227
Bosch	F5CP12 (radar sensor)	N3827-22
Continental Automotive	MARS Keyless (locking system)	DA105282
Continental Automotive Technologies	NTG7Q MID LF2 (head unit)	DA105282
Continental Automotive Technologies	NTG7Q HIGH LF2 (head unit)	DA105282
Continental Automotive Technologies	NTG7Q PREMIUM LF2 (head unit)	DA105282
HELLA	DM4 (locking system)	DA103365 N3308-22
Hirschmann	920510A (locking system)	N1412-18
HUF	HUF13482 (locking system)	DB105654
Huf Baolong	TSSRE4A (tyre pressure sensor)	DA105282
Huf Baolong	TSSRE4Uf (tyre pressure sensor)	DA103365
Huf Baolong	TSSSG4G6b (tyre pressure monitoring system control unit)	DA28467
MARQUARDT	DC12B (locking system)	DA103365
MARQUARDT	MS2 (locking system)	DA103787
Meta System	ITS/TPS (interior protection)	DA103365
Meta System	MUW II (interior protection)	DA103365
Veoneer	6208428 (radar sensor)	N2743-16
Veoneer	24 GHz MMR (radar sensor)	N2955-17
Visteo	HFA30 (radar sensor)	N4949-23
WITTE-Velbert	SDHTAG3NFC (locking system)	DA107248 N1755-20

SOUTH AFRICA

REGULATORY RADIO IDENTIFIERS

Manufacturer	Model designation	Radio equipment approval number
Continental ADC	SRR6-A (control unit)	TA-2023/1985
Bosch	FR5CPCCF (radar sensor)	TA-2019/1200
Bosch	MRR1Rear (radar sensor)	TA-2014/212
Bosch	MRRe14FCR (radar sensor)	TA-2017/2013
Bosch	LRR3 (radar sensor)	TA-2009/464
Bosch	F5CP12 (radar sensor)	TA-2022/0153

Manufacturer	Model designation	Radio equipment approval number
Continental Automotive	MARS Keyless (locking system)	TA-2016/3500
Continental Automotive Technologies	NTG7Q MID LF2 (head unit)	TA-2023/0091
Continental Automotive Technologies	NTG7Q HIGH LF2 (head unit)	TA-2023/0111
Continental Automotive Technologies	NTG7Q PREMIUM LF2 (head unit)	TA-2023/0090
HELLA	DM4 (locking system)	TA-2017/2518
Hirschmann	920510A (locking system)	TA-2017/2350
Huf Baolong	TSSRE4A (tyre pressure sensor)	TA-2017/1393
Huf Baolong	TSSRE4Uf (tyre pressure sensor)	TA-2019/1853
Huf Baolong	TSSSG4G6b (tyre pressure monitoring system control unit)	TA-2019/1440
MARQUARDT	DC12B (locking system)	TA-2011/370
MARQUARDT	MS2 (locking system)	TA-2016/3314
Schrader	MC34MA4 (tyre pressure monitoring system control unit)	TA-2011/1370
Visteo	HFA30 (radar sensor)	TA-2023/2469

SOUTH KOREA

REGULATORY RADIO IDENTIFIERS

Manufacturer	Model designation	Radio equipment approval number
Continental Automotive Technologies	NTG7Q LF2 (head unit)	R-R-TeH- NTG7QLF2
Hirschmann	920510A (locking system)	R-C-0HR-920510A
Huf Baolong	TSSRE4A (tyre pressure sensor)	R-CRM-HHFTSSRE4A
Huf Baolong	TSSRE4Uf (tyre pressure sensor)	R-CRM-HHF-TSSRE4A
Huf Baolong	TSSSG4G6b (tyre pressure sensor)	R-R-HEB-TSSSG4G6B
HUF	HUF13482 (locking system)	R-R-HHF-HUF-13482
Visteo	HFA30 (radar sensor)	R-R-vT2-HFA30

THAILAND

REGULATORY RADIO IDENTIFIERS

Manufacturer	Model designation	Radio equipment approval number
Continental Automotive Technologies	NTG7Q PREMIUM LF2 (head unit)	130111-23-0132

TOGO

REGULATORY RADIO IDENTIFIERS

Manufacturer	Model designation	Radio equipment approval number
Continental Automotive	MARS Keyless (locking system)	No. 059/24
HELLA	DM4 (locking system)	No. 039/19
MARQUARDT	DC12B (locking system)	No. 057/19
MARQUARDT	MS2 (locking system)	No. 008/19

UKRAINE

REGULATORY RADIO IDENTIFIERS

Manufacturer	Model designation	Radio equipment approval number
Continental ADC	SRR6-A (control unit)	UA RF: 1ADCG001
Continental Automotive	MARS Keyless (locking system)	RTS.UKR.355-34/18
Continental Automotive Technologies	NTG7Q MID LF2 (head unit)	UA.TR.052
Continental Automotive Technologies	NTG7Q HIGH LF2 (head unit)	UA.TR.052
Continental Automotive Technologies	NTG7Q PREMIUM LF2 (head unit)	UA.TR.052
HELLA	DM4 (locking system)	UA.TR.109
Hirschmann	920510A (locking system)	UKR. 355-9/20
Hirschmann	920508A (locking system)	Supplier number: 16833352
Hirschmann	920508B (locking system)	Supplier number: 16833352
Huf Baolong	TSSRE4A (tyre pressure sensor)	UA 1.001.018568-19-TE
Huf Baolong	TSSRE4Uf (tyre pressure sensor)	UA 1.001.020702-19-TE
Huf Baolong	TSSSG4G6b (tyre pressure monitoring system control unit)	UA 1.001.019289-19-TE
MARQUARDT	DC12B (locking system)	UA.R.TR.052.308-19
MARQUARDT	MS2 (locking system)	UA1.001.019129-19-TE

UZBEKISTAN

REGULATORY RADIO IDENTIFIERS

Manufacturer	Model designation
Continental Automotive	MARS Keyless (locking system)
HELLA	DM4 (locking system)
MARQUARDT	DC12B (locking system)

Manufacturer	Model designation
MARQUARDT	MS2 (locking system)
Visteo	HFA30 (radar sensor)

UNITED ARAB EMIRATES

TDRA هيئة تنظيم الاتصالات والحكومة الرقمية
TELECOMMUNICATIONS AND DIGITAL GOVERNMENT REGULATORY AUTHORITY

REGULATORY RADIO IDENTIFIERS

Manufacturer	Model designation	Radio equipment approval number
Bosch	FR5CPCCF (radar sensor)	TA RTTE: ER74533/19, DA36758/14
Continental Automotive	MARS Keyless (locking system)	TRA ER56005/17, DA44932/15
Continental Automotive Technologies	NTG7Q MID LF2 (head unit)	TDRA ER17731/23, DA76163/18
Continental Automotive Technologies	NTG7Q HIGH LF2 (head unit)	TDRA ER17730/23, DA76163/18
Continental Automotive Technologies	NTG7Q PREMIUM LF2 (head unit)	TDRA ER17732/23, DA76163/18
HELLA	DM4 (locking system)	TRA ER56616/17, DA44932/15
Hirschmann	920510A (locking system)	TRA ER59686/17
Huf Baolong	TSSRE4A (tyre pressure sensor)	TRA ER57806/17 DA36976/14
Huf Baolong	TSSRE4Uf (tyre pressure sensor)	TRA ER75266/19
Huf Baolong	TSSSG4G6b (tyre pressure monitoring system control unit)	TRA ER7307/19 DA0086237/12
HUF	HUF13482 (locking system)	TRA ER33320/24
MARQUARDT	DC12B (locking system)	TRA ER0067828/11 DA0018994/09
MARQUARDT	MS2 (locking system)	TRA ER52668/17, DA0018994/09
Visteo	HFA30 (radar sensor)	TRA ER25428/23

UNITED STATES

REGULATORY RADIO IDENTIFIERS

Manufacturer	Model designation	Radio equipment approval number
Continental ADC	SRR6-A (control unit)	FCC ID: OAYSRR6A
Continental Automotive Technologies	NTG7Q MID LF2 (head unit)	FCC ID: NTG7QMIDLF2
Continental Automotive Technologies	NTG7Q HIGH LF2 (head unit)	FCC ID: NTG7QHIGLF2
Continental Automotive Technologies	NTG7Q PREMIUM LF2 (head unit)	FCC ID: NTG7QPRELF2
Hirschmann	920510A (locking system)	FCC ID: XTJ920510A
Huf Baolong	TSSRE4A (tyre pressure sensor)	FCC ID: YGOTSSRE4A
Huf Baolong	TSSRE4Uf (tyre pressure sensor)	FCC ID: OYGTSSRE4UF
Schrader	HSW4T (tyre pressure monitoring system control unit)	FCC ID: MRXMC34MA4
Visteo	HFA30 (radar sensor)	FCC ID: 2A6TC-HFA30

Information on installation clearances

Charging unit for the wireless charging of mobile devices (WMI):

The charging unit for the wireless charging of mobile devices (WMI) complies with the FCC and IC radiation exposure limits that have been defined for an uncontrolled environment. This equipment must be installed and operated with a minimum distance of 0 cm (in contact) between the radiation source and your body. This transmitter must not be placed in the same location as, or used at the same time as, another transmitter or antenna.

Radar sensors:

ARS4-C (Continental ADC), ARS4-B (Continental ADC), ARS4-A (Continental ADC), FR5CPCCF (Bosch), MRR1REAR (Bosch), MRREVO14F (Bosch), LRR3 (Bosch), 77V12BSM (Veoneer), 77V12CRN (Veoneer), MMRV1 (Veoneer)

Information on exposure to high-frequency radiation:

This equipment complies with the FCC radiation exposure limits that have been defined for an uncontrolled environment. This equipment should be installed and operated with a minimum distance of 20 cm between the radiation source and your body.

This transmitter must not be placed in the same location as, or operated in conjunction with, any other antenna or transmitter.

Control units:

SRR6-A (Continental ADC)

Information on exposure to high-frequency radiation:

This equipment complies with the FCC radiation exposure limits that have been defined for an uncontrolled environment. This equipment should be installed and operated with a minimum distance of 20 cm between the radiation source and your body. This transmitter must not be placed in the same location as, or operated in conjunction with, any other antenna or transmitter.

VIETNAM

REGULATORY RADIO IDENTIFIERS

Manufacturer	Model designation	Radio equipment approval number
Bosch	FR5CPCCF (radar sensor)	Mercedes-Benz Vietnam Company Limited
Bosch	MRR1Rear (radar sensor)	Mercedes-Benz Vietnam Company Limited
Bosch	MRRe14FCR (radar sensor)	Mercedes-Benz Vietnam Company Limited
Continental Automotive	MARS Keyless (locking system)	Mercedes-Benz Vietnam Company Limited B0748240419AF04A2
HELLA	DM4 (locking system)	Mercedes-Benz Vietnam Company Limited CO204030321AF04A3
Hirschmann	920510A (locking system)	C0512261120AF04A3
Hirschmann	920510A (locking system)	C0290181218AF04A2 Supplier number: 16833352
MARQUARDT	DC12B (locking system)	Suntech Vietnam Technology Company Limited C0076210121AF04A3
MARQUARDT	MS2 (locking system)	Suntech Vietnam Technology Company Limited C0075210121AF04A3

Information about the specific absorption rate (SAR)

INFORMATION ON THE SPECIFIC ABSORPTION RATE

The values have been determined and tested in accordance with Décret n° 2019-1186 regarding the indication of the specific absorption rate of radio-based vehicle components.

Further information and updates are available at the following web address:

https://regulatoryradioinformation.corpinter.net/vans/vans/en

INFORMATION ON THE SPECIFIC ABSORPTION RATE

Vehicle components	SAR value in W/kg	Limit value to be used
D-WMI2020A	0.018 W/kg	4 W/kg
Gen20x.i2 LS3+	2.2 W/kg	4 W/kg
Gen20x.i2 LS4+	2.5 W/kg	4 W/kg
ARTEMIS communication module	0.471 W/kg	2 W/kg
HERMES communication module	< 0.4 W/kg	2 W/kg
RAMSES communication module	0.036 W/kg	2 W/kg
ECE DE003 & ECE DE004 compensators	< 0.2 W/kg	2 W/kg
NRCS2P	0.003 W/kg	2 W/kg
NTG6	0.199 W/kg	4 W/kg
NTG7	0.08 W/kg	2 W/kg
NTG7RSU	0.07 W/kg	2 W/kg
SM-T230NZ tablet PC	0.7 W/kg	4 W/kg
Radio data transmission telephone system	0.24 W/kg	2 W/kg

Importer information for regulatory radio components

MOLDOVA ONLY:
Importer

S.C. GRAND PREMIUM S.R.L. Moldova

mun. Chisinau, str. Hîncesti sos., 2/2

TURKEY ONLY:
Importer

Mercedes Benz Otomotiv Ticaret ve Hizmetler A.Ş. Genel Merkez

Akçaburgaz Mah. Süleyman Şah Cad. No: 6/1

34522 Esenyurt/Istanbul

UKRAINE ONLY:
Importer

PJSC „AUTOCAPITAL“

Velyka Vasylkivska str. 15/2

01004 Kyiv

Ukraine

UNITED KINGDOM ONLY:
Importer of Mercedes-Benz cars

Mercedes-Benz Cars UK Limited

Delaware Drive, Tongwell

Milton Keynes, MK15 8BA

England

Importer of Mercedes-Benz vans

Mercedes-Benz Vans UK Limited

Delaware Drive, Tongwell

Milton Keynes, MK15 8BA

England

Importer of Mercedes-Benz spare parts

Mercedes-Benz Parts Logistics

Delaware Drive, Tongwell

Milton Keynes, MK15 8BA

England

Further information and updates are available at the following web address:

https://regulatoryradioinformation.corpinter.net/vans/vans/en

Vehicle identification plate, vehicle identification number (VIN) and engine number

VEHICLE IDENTIFICATION PLATE

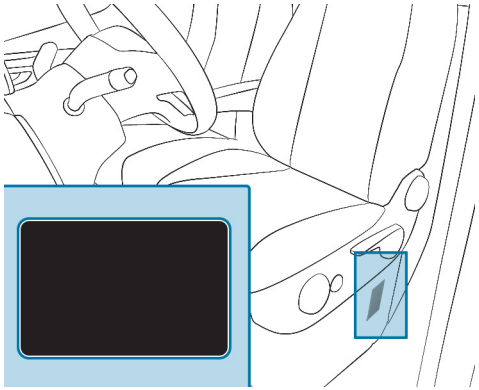

Depending on the vehicle model, the vehicle identification plate is located on the seat box of the driver's seat or on the B-pillar.

> ⓘ The data is vehicle-specific and may differ from that shown. Always observe the specifications on your vehicle identification plate.

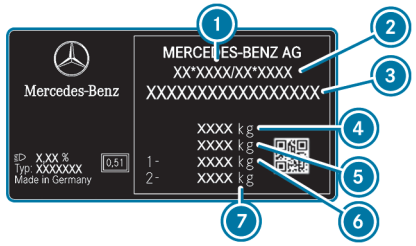

Example: vehicle identification plate

1. Vehicle manufacturer
2. EC operating permit number (only for certain countries)
3. VIN (vehicle identification number)
4. Permissible gross mass (kg)
5. Permissible gross mass of vehicle combination (kg) (only for certain countries)
6. Maximum permissible front axle load (kg)
7. Maximum permissible rear axle load (kg)

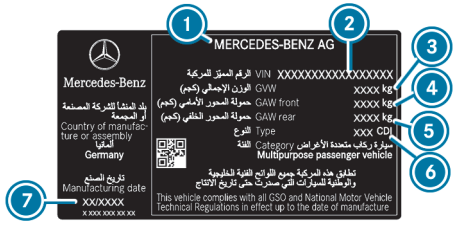

Vehicle identification plate (example: Gulf States)

1. Vehicle manufacturer

2 VIN (vehicle identification number)
3 Permissible gross mass
4 Maximum permissible front axle load (kg)
5 Maximum permissible rear axle load (kg)
6 Engine type
7 Manufacturing date

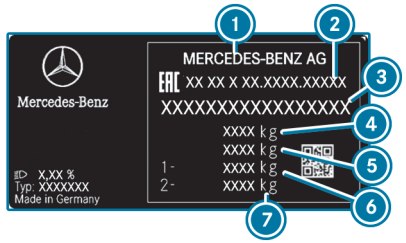

Example: vehicle identification plate

1 Vehicle manufacturer
2 Type approval number
3 VIN (vehicle identification number)
4 Permissible gross mass (kg)
5 Permissible gross mass of vehicle combination (kg) (only for certain countries)
6 Maximum permissible front axle load (kg)
7 Maximum permissible rear axle load (kg)

THE VEHICLE IDENTIFICATION PLATE MAY ALSO INCLUDE THE FOLLOWING DATA:

- Payload
- Kerb weight
- Number of passenger seats

VIN ENGRAVED UNDERNEATH THE BONNET

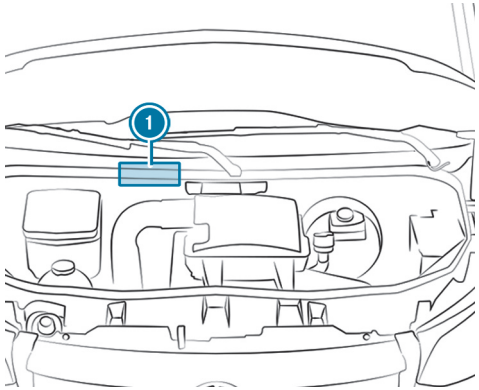

Engraved VIN 1 is located underneath the bonnet.

VIN ON LOWER SECTION OF WINDSCREEN

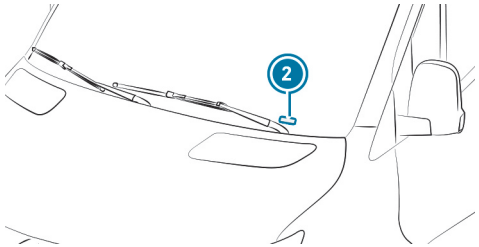

The VIN is also attached as a label on the lower section of the windscreen 2.

The VIN below the windscreen is only available for certain countries.

ENGINE NUMBER

The engine number is stamped onto the crankcase. More detailed information can be obtained at a qualified specialist workshop.

Operating fluids and capacities

Notes on operating fluids

WARNING
Risk of injury due to harmful operating fluids

Operating fluids can be toxic.

- When using, storing and disposing of operating fluids, observe the imprints on the respective original containers.
- Always keep operating fluids in the sealed original container.
- Always keep children away from operating fluids.

ENVIRONMENTAL NOTE
Pollution of the environment due to irresponsible disposal of operating fluids

Incorrect disposal of operating fluids can cause considerable damage to the environment.

- Dispose of operating fluids in an environmentally responsible manner.

OPERATING FLUIDS INCLUDE THE FOLLOWING:

- Fuels
- Exhaust gas aftertreatment additives, e.g.AdBlue®
- Lubricants
- Coolant
- Brake fluid
- Windscreen washer fluid
- Climate control system refrigerant

Only use products which have been approved for your vehicle by Mercedes-Benz. Damage caused to the vehicle by using products that have not been approved is not covered by the Mercedes-Benz warranty or goodwill gestures.

YOU CAN IDENTIFY OPERATING FLUIDS APPROVED BY MERCEDES-BENZ BY THE FOLLOWING LABELS ON THE CONTAINER:

- MB-Freigabe (e.g. MB-Freigabe 229.51)
- MB-Approval (e.g. MB-Approval 229.51)

FURTHER INFORMATION ON APPROVED OPERATING FLUIDS IS AVAILABLE FROM THE FOLLOWING SOURCES:

- In the Mercedes-Benz Specifications for operating fluids at https://operatingfluids.mercedes-benz.com (with details of specification).
- At a qualified specialist workshop

WARNING
Risk of fire or explosion from fuel

Fuels are highly flammable.

- Fire, naked flames, smoking and creating sparks must be avoided.
- Before refuelling, switch off the vehicle and, if fitted, the stationary heater and keep switched off during filling.

WARNING
Risk of injury from fuels

Fuels are poisonous and hazardous to your health.

- Do not swallow fuel or let it come into contact with skin, eyes or clothing.
- Do not inhale fuel vapour.
- Keep children away from fuel.
- Keep doors and windows closed during the refuelling process.

If you or other people come into contact with fuel, observe the following:

- Immediately rinse fuel off your skin with soap and water.
- If fuel comes into contact with your eyes, immediately rinse them thoroughly with clean water. Seek medical attention immediately.
- If you swallow fuel, seek medical attention immediately. Do not induce vomiting.
- Change immediately out of clothing that has come into contact with fuel.

Fuel

NOTES ON FUEL QUALITY FOR VEHICLES WITH DIESEL ENGINES

GENERAL NOTES

Observe the notes on operating fluids (⟶ page 741).

WARNING
Risk of fire from fuel mixture

If you mix diesel fuel with petrol, the flash point of the fuel mixture is lower than that of pure diesel fuel.

- ► Never refuel using petrol in diesel engines.
- ► Never mix petrol with diesel fuel.

NOTE
Damage due to incorrect fuel

Even small amounts of the wrong fuel could result in damage to the fuel system, the engine and the emission control system.

- ► Refuel only with sulphur-free diesel fuel that conforms to the European standard EN 590 or an equivalent specification. In countries without sulphur-free diesel fuel, refuel using only low-sulphur diesel fuel with a sulphur content of less than 50 ppm.

NEVER REFUEL WITH THE FOLLOWING:

- Petrol
- Marine diesel
- Heating oil
- Pure fatty acid methyl ester or vegetable oil
- Paraffin or kerosene

If you accidentally refuel with the wrong fuel:

- ► Do not switch on the vehicle.
- ► Contact a qualified specialist workshop.

NOTE
Shorter maintenance intervals due to fuel with increased bio-contents

When fuels with increased bio-contents are used, fuel residues with increased separation volume may occur. If fuels with increased bio-contents (compatibility marks B10 and B20) are used on an ongoing basis, this may lead to shorter maintenance intervals for the fuel filter.

If the vehicle is not used for an extended period of time (several weeks):

- Refuel the vehicle beforehand with diesel fuel with bio-contents < 10% to avoid possible deposits of bio-contents in the fuel tank.

The following compatibility marks for fuel apply to your vehicle:

1. For diesel fuel with a maximum of 7% fatty acid methyl ester by volume (bio-diesel)
2. For diesel fuel with a maximum of 10% fatty acid methyl ester by volume (bio-diesel)
3. For diesel fuel with a maximum of 20% fatty acid methyl ester by volume (bio-diesel)

Refill with diesel fuel containing a maximum of 10% or 20% fatty acid methyl ester by volume (bio-diesel) only if the corresponding compatibility mark is present on your fuel filler flap.

IN ACCORDANCE WITH EUROPEAN STANDARD EN 16942, YOU WILL FIND THE COMPATIBILITY MARKS FOR FUEL IN THE FOLLOWING PLACES:

- On the vehicle on the information label in the fuel filler flap(⟶ page 32)
- On the fuel dispensers or pump nozzles suitable for your vehicle throughout Europe

XTL-COMPATIBLE VEHICLES

Refuel with paraffinic diesel fuels in accordance with EN 15940 only if the appropriate compatibility mark is present on your fuel filler flap.

Alternatively, you can also refuel with paraffinic diesel fuel (e.g. HVO = hydrogenated vegetable oil, GTL = gas-to-liquid) that complies with European standard EN 15940. Paraffinic diesel fuels are collectively known as XTL.

In accordance with European standard EN 16942, the following fuel compatibility marks apply to your XTL-compatible vehicle:

1 For paraffinic diesel fuel

NOTES ON LOW OUTSIDE TEMPERATURES
Refuel your vehicle at the beginning of the winter until winter diesel fuel accounts for as much of the content of your tank as possible.

Before switching to winter diesel fuel, the fuel tank should be as empty as possible. When first refuelling with winter diesel fuel, keep the fuel level low (e.g. to reserve level). When you next refuel, you can fill the fuel tank normally again.

FURTHER INFORMATION ON FUEL IS AVAILABLE:

- At a filling station
- At a qualified specialist workshop

NOTES ON TANK CONTENT AND TANK RESERVE
You can find information regarding tank content and tank reserve in the printed Owner's Manual.

AdBlue® (vehicles with a diesel engine only)

NOTES ON ADBLUE®
Observe the notes on operating fluids (⟶ page 741).

AdBlue® is a water-soluble fluid for the exhaust gas aftertreatment of diesel engines.

NOTE
Irritation to skin, eyes and respiratory tract due to AdBlue®

AdBlue® can cause irritation if inhaled or ingested, or if it comes in contact with eyes or skin. When the tank is open, ammonia vapours can escape.

- ▶ Do not inhale or ingest AdBlue®.
- ▶ Make sure AdBlue® does not come into contact with your skin, eyes or clothing.
- ▶ Keep AdBlue® away from children.
- ▶ Only fill the AdBlue® tank in well-ventilated areas.

IF A PERSON COMES INTO CONTACT WITH ADBLUE®, OBSERVE THE FOLLOWING:

- If you have ingested AdBlue®, drink plenty of water and seek medical attention immediately.
- If AdBlue® has come into contact with your eyes, rinse them for 15 minutes, also beneath the eyelids.
- Immediately rinse AdBlue® off your skin with soap and water.

NOTE
Damage caused by additives in AdBlue® or by diluting AdBlue®

THE ADBLUE® EXHAUST GAS AFTERTREATMENT SYSTEM COULD BE DESTROYED BY THE FOLLOWING:

- additives in AdBlue®
- diluting AdBlue®

▶ Only use AdBlue® in accordance with ISO 22241.

▶ Do not mix additives.

▶ Do not dilute AdBlue®.

NOTE
Damage and malfunctions caused by impurities in AdBlue®

IMPURITIES IN ADBLUE® RESULT IN THE FOLLOWING:

- higher emission values
- damage to the catalytic converter
- engine damage
- malfunctions in the AdBlue® exhaust gas aftertreatment system

▶ Avoid impurities in AdBlue®.

ENVIRONMENTAL NOTE
Staining due to AdBlue®

AdBlue® residue crystallises after some time and stain the affected surfaces.

▶ Immediately rinse surfaces that come in contact with AdBlue® when filling with water or remove AdBlue® with a damp cloth and cold water.

If AdBlue® has already crystallised, clean using a sponge and cold water.

If you open the AdBlue® tank, small amounts of ammonia vapour may be released. Do not inhale any ammonia vapours that may be released. Fill the AdBlue® tank only in well-ventilated areas.

EXHAUST GAS AFTERTREATMENT
The vehicle must be operated with AdBlue® if the exhaust gas aftertreatment system is to function correctly.

If you operate the vehicle without AdBlue® or with emissions-relevant malfunctions, the MOT approval is invalidated. The legal consequence of this is that the vehicle may no longer be operated on public roads.

It may be improper or punishable in some countries to operate a vehicle that uses no AdBlue® or one that does not comply with the specifications of this Owner's Manual.

Engine management monitors the exhaust gas aftertreatment components for compliance with emissions laws and regulations. If you attempt to operate the vehicle without AdBlue®, with diluted AdBlue® or with a different reducing agent, this will be detected by the engine management system. Other emissions-relevant malfunctions, e.g. metering malfunctions or sensor errors, are also detected and logged.

The engine management system subsequently prevents the engine being restarted after issuing a warning message.

Therefore, top up the AdBlue® tank regularly during vehicle operation or, at the latest, after receiving the first warning message via the instrument cluster.

ADBLUE® CONSUMPTION AND FILLING QUANTITY

ADBLUE® CONSUMPTION

As with fuel consumption, AdBlue® consumption is highly dependent upon driving style and operating conditions. AdBlue® consumption is usually within a range of 0 to 10% of fuel consumption. If necessary, AdBlue® must be topped up in accordance with the instructions when the refill message is displayed on the instrument cluster. This may also be required between scheduled maintenance.

Check the AdBlue® fill level before embarking on journeys outside of Europe. You can refill AdBlue® at the AdBlue® fuel dispensers at a filling station or using commercially available refill containers.

TOTAL CAPACITY OF ADBLUE® TANK

Model	Total capacity
All models	22 litres

Engine oil

NOTES ON ENGINE OIL

Observe the notes on operating fluids (⟶ page 741).

NOTE

Engine damage caused by an incorrect oil filter, incorrect oil or additives

- Do not use engine oils or oil filters other than those which meet the specifications necessary for the prescribed service intervals.
- Do not alter the engine oil or oil filter in order to achieve longer change intervals than prescribed.
- Do not use additives.
- Have the engine oil changed after the prescribed intervals.

Mercedes-Benz recommends having the oil changed at a qualified specialist workshop.

Only engine oils approved for Mercedes-Benz may be used in Mercedes-Benz engines.

FURTHER INFORMATION ON ENGINE OIL AND OIL FILTERS:

- In the Mercedes-Benz Specifications for operating fluids at https://operatingfluids.mercedes-benz.com (with details of specification).
- At a qualified specialist workshop

ENGINE OIL QUALITY AND FILLING QUANTITY

The containers of the various engine oils are labelled with the ACEA (Association of European Automotive Manufacturers) and/or API (America Petroleum Institute) classifications. Use only approved engine oils that comply with the MB Specifications for Operating Fluids and the prescribed ACEA and/or API classifications listed below. Engine oils of other grades are not permissible and may result in the loss of the New Vehicle Limited Warranty. The use of other engine oils not approved for diesel engines may damage the diesel particulate filter (DPF).

MB-FREIGABE OR MB-APPROVAL

Diesel engines	MB-Freigabe or MB-Approval
OM654	229.51, 229.52, 229.61, 229.71[1)], 229.72

1) recommended for lowest possible fuel consumption (lowest SAE viscosity class in each case; observe possible restrictions of the approved SAE viscosity classes)

To achieve the lowest possible fuel consumption, it is recommended that the engine oil specifications identified in the table with the lowest SAE viscosity class are used. Observe any possible restrictions of the approved SAE viscosity classes.

Multigrade engine oils of the prescribed SAE viscosity class may be used all year round, taking the outside temperature into account.

VISCOSITY OF THE ENGINE OIL

NOTE
Engine damage due to incorrect SAE classification (viscosity) of the engine oil

If the SAE classification (viscosity) of the engine oil added is not suitable for prolonged low outside temperatures, it may cause engine damage.

The temperature readings of the SAE classification are always based on fresh oil. Engine oil ages when driving as a result of soot and fuel residue. The characteristics of engine oil deteriorate significantly at low outside temperatures.

- Use an engine oil of the appropriate SAE classification at low outside temperatures.
- Use oil for all-year-round operation.

The temperature readings of the SAE viscosity class are always based on fresh oil. The temperature characteristics of the engine oil, especially at low outside temperatures, can deteriorate significantly due to ageing during vehicle operation.

Therefore, Mercedes-Benz recommends that you change the engine oil before the start of the cold season. Use only an approved engine oil in the prescribed SAE viscosity class for this purpose.

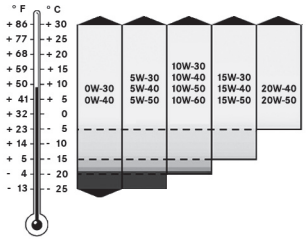

Viscosity indicates the flow characteristics of a fluid. With regard to engine oil, a high viscosity is synonymous with thick liquid and a low viscosity with thin liquid. Depending on the outside temperatures, select the engine oil according to the SAE viscosity class. The table shows the SAE viscosity classes to be used. The low temperature characteristics of engine oils can deteriorate significantly during operation due to ageing, soot and fuel accretion, forexample. A regular oil change with an approved engine oil in the appropriate SAE viscosity class is therefore strongly recommended.

ADDITIVES

NOTE
Engine damage due to use of additives in the engine oil

The use of additional additives in the engine oil can damage the engine.

► Do not use any additional additives in the engine oil.

MISCIBILITY OF ENGINE OIL

Mixing oil reduces the benefits of high-quality engine oils.

We recommend that you use only engine oil of the same grade and SAE viscosity class as the oil used for the last oil change. If, in exceptional cases, engine oil of the same type in the engine is not available, use another approved mineral or synthetic engine oil.

You must then have an oil change carried out at the earliest possible opportunity.

ENGINE OILS ARE CLASSIFIED ACCORDING TO:

- Engine oil brand
- Grade (MB-Freigabe or MB-Approval)
- SAE viscosity class

OIL CHANGE INTERVAL

The on-board computer will automatically show the date of the next oil change as an event message on the display.

Mercedes-Benz recommends having the oil changed at a qualified specialist workshop.

ENGINE OIL FILLING QUANTITY

Engine	Filling quantity
OM654 (rear wheel drive and all-wheel drive)	Approximately 10.0 litres
OM654 (front wheel drive)	Approximately 8.0 litres

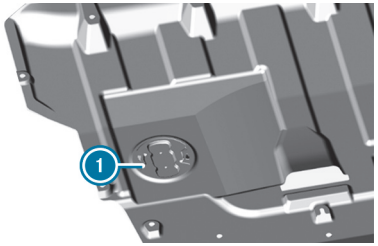

1 Drain screw access (vehicles with underfloor panelling)

INFORMATION ON OIL CONSUMPTION

Depending on your driving style, the vehicle will consume a maximum of 1.0 litre of engine oil per 1000 km.

IN THE FOLLOWING CASES, OIL CONSUMPTION MAY ALSO EXCEED THIS LIMIT:

- The vehicle is new.
- The vehicle is used predominantly in arduous operating conditions.
- The vehicle is frequently driven at high engine speeds.

Regular maintenance is a prerequisite for favourable consumption figures. You can assess the oil consumption only after a long journey. Check the oil level in the engine regularly, e.g.weekly or every time you refuel.

Notes on brake fluid

Observe the notes on operating fluids (⟶ page 741).

WARNING
Risk of an accident due to vapour pockets forming in the brake system

The brake fluid constantly absorbs moisture from the air. This lowers the boiling point of the brake fluid. If the boiling point is too low, vapour pockets may form in the brake system when the brakes are applied hard.

This impairs the braking effect.

► Have the brake fluid renewed at the specified intervals.

Have the brake fluid renewed every two years at a qualified specialist workshop.

NOTE
Damage to paint, plastic or rubber by brake fluid

There is a risk of damage to property if brake fluid comes into contact with paint, plastic or rubber.

► If paint, plastic or rubber comes into contact with brake fluid, rinse with water immediately.

Observe the notes on paintwork/matt finish paintwork care (⟶ page 623).

Only use brake fluid approved by Mercedes-Benz in accordance with MB-Freigabe or MB-Approval 331.0.

INFORMATION ON BRAKE FLUID IS AVAILABLE AT THE FOLLOWING LOCATIONS:

- in the Mercedes-Benz Specifications for Operating Fluids 331.0 at https://operatingfluids.mercedes-benz.com
- at a qualified specialist workshop

Coolant

NOTES ON COOLANT
Observe the notes on operating fluids (⟶ page 741).

WARNING
Risk of fire- and injury from antifreeze

If antifreeze comes into contact with hot component parts in the engine compartment, it may ignite.

- Allow the vehicle to cool down before you top up the antifreeze.
- Make sure that no antifreeze spills out next to the filler opening.
- Thoroughly clean the antifreeze from component parts before starting the vehicle.

NOTE
Damage caused by incorrect coolant

- Only add coolant that has been premixed with the required antifreeze protection.

INFORMATION ON COOLANT IS AVAILABLE FROM THE FOLLOWING SOURCES:

- In the Mercedes-Benz Specifications for Operating Fluids 320.1 at https://operatingfluids.mercedes-benz.com
- At a qualified specialist workshop

NOTE
Overheating at high outside temperatures

If an inappropriate coolant is used, the engine cooling system is not sufficiently protected against overheating and corrosion at high outside temperatures.

- Always use coolant approved for Mercedes-Benz.
- Observe the instructions in the Mercedes-Benz Specification for Operating Fluids 320.1.

NOTE
Paintwork damage due to coolant

- Do not spill coolant on painted surfaces.

Have the coolant replaced regularly at a qualified specialist workshop.

NOTE THE PROPORTION OF ANTICORROSION AGENT/ANTIFREEZE IN THE ENGINE COOLING SYSTEM WITHIN THE FOLLOWING TEMPERATURE RANGES:

- A minimum of 50% (antifreeze protection down to about -37 °C)
- A maximum of 55% (antifreeze protection down to -45 °C)

Windscreen washer fluid

NOTES ON WINDSCREEN WASHER FLUID
Observe the notes on operating fluids (⟶ page 741).

WARNING
- Risk of fire and injury due to windscreen washer concentrate

Windscreen washer concentrate is highly flammable. It could ignite if it comes into contact with hot engine component parts or the exhaust system.

► Make sure that no windscreen washer concentrate spills out next to the filler opening.

NOTE
Damage to the exterior lighting due to unsuitable windscreen washer fluid

Unsuitable windscreen washer fluids may damage the plastic surface of the exterior lighting.

► Only use windscreen washer fluids which are also suitable for use on plastic surfaces, e.g. MB SummerFit or MB WinterFit.

NOTE
Blocked spray nozzles caused by mixing windscreen washer fluids

► Do not mix MB SummerFit and MB WinterFit with other windscreen washer fluids.

Do not use distilled or de-ionised water. Otherwise, the fill level sensor may be actuated erroneously.

INFORMATION ON WINDSCREEN WASHER FLUID

RECOMMENDED WINDSCREEN WASHER FLUID:

- Above freezing point: e.g. MB SummerFit
- Below freezing point: e.g. MB WinterFit

MIXING RATIO
For the correct mixing ratio, refer to the information on the anti-freeze container.

Mix the washer fluid with windscreen washer fluid all year round.

Refrigerant

NOTES ON REFRIGERANT
The climate control system contains fluorinated greenhouse gases.

Observe the notes on operating fluids (⟶ page 741).

The following specifications apply only to EU and EFTA countries according to EU Directive 573/2024.

Information for vehicles with rear wheel drive or all-wheel drive:

NOTE
Damage due to incorrect refrigerant

If a non-approved refrigerant is used, the climate control system may be damaged.

► Use only R-1234yf refrigerant.

Information for vehicles with front wheel drive:

NOTE
Damage due to incorrect refrigerant

If a non-approved refrigerant is used, the climate control system may be damaged.

► Use only R-134a refrigerant.

Maintenance work, suchas topping up the refrigerant or replacing components, may only be carried out by a qualified specialist workshop. All applicable specifications, as well as SAE Standard J639, must be adhered to.

Always have all work on the climate control system carried out at a qualified specialist workshop.

The information label indicating the refrigerant type and the refrigerant compressor oil (PAG-oil) on the climate control system is located inside the bonnet or at the front of the engine compartment.

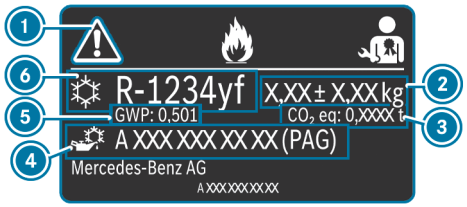

Information label for vehicles with rear wheel drive or all-wheel drive (example - EU countries only)

1. Symbols for hazard and service information
2. Refrigerant filling quantity
3. CO_2 equivalent of the refrigerant used
4. PAG oil part number
5. GWP value (Global Warming Potential) of the refrigerant used
6. Refrigerant type

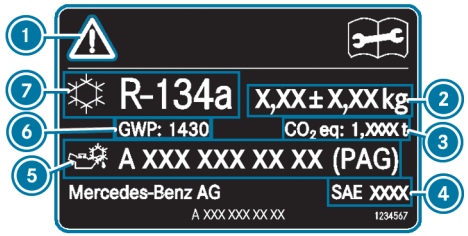

Information label for vehicles with front wheel drive (example)

1. Symbols for hazard and service information
2. Refrigerant filling quantity
3. CO_2 equivalent of the refrigerant used
4. Applicable standards
5. PAG oil part number
6. GWP value (Global Warming Potential) of the refrigerant used
7. Refrigerant type

THE SYMBOLS (1) INDICATE THE FOLLOWING:

- Potential dangers
- Performance of maintenance work at a qualified specialist workshop

REFRIGERANT SPECIFICATIONS

The following specifications apply only to EU and EFTA countries according to EU Directive 573/2024.

REFRIGERANT SPECIFICATIONS (VEHICLES WITH FRONT WHEEL DRIVE)

Refrigerant filling quantity	CO_2 equivalent*
0.66 ± 0.01 kg	0.944 t

REFRIGERANT SPECIFICATIONS (VEHICLES WITH REAR WHEEL DRIVE OR ALL-WHEEL DRIVE)

Refrigerant filling quantity	CO_2 equivalent*
0.5 - 2.0 ± 0.01 kg	0.0003 t - 0.0010 t

*The CO_2 equivalent is calculated on the basis of the filling quantity using the following formula: CO_2 equivalent (t) = refrigerant filling quantity × GWP/1000.

ⓘ The vehicle-specific filling quantity depends on the respective vehicle equipment. The filling quantity for your vehicle can be found on the information label for the air conditioning system inside the bonnet or at the front of the engine compartment.

Notes on vehicle data

IN THE PRINTED OPERATING INSTRUCTIONS YOU CAN FIND INFORMATION ABOUT THE FOLLOWING DATA:

- Vehicle dimensions
- Weights and loads

Trailer hitch

Notes on the trailer hitch

WARNING
Risk of accident due to impermissible attachment of a trailer tow hitch

If you install a trailer tow hitch or other components, the longitudinal frame member is weakened and can break. The trailer may become detached from the vehicle.

There is a risk of an accident.

Only retrofit a trailer tow hitch if permissible.

Observe the notes on trailer operation (⟶ page 441).

Retrofitting a trailer hitch is only permissible if a towing capacity is specified in your vehicle documents.

You can obtain further information on the trailer hitch at a qualified specialist workshop or on the Internet at the https://bb-portal.mercedes-benz.com/de/GLOBAL

Mercedes-Benz recommends that you have a trailer hitch retrofitted at a Mercedes-Benz Service Centre.

Only use a trailer hitch which has been tested and specially approved by Mercedes-Benz for your vehicle.

The maximum permissible towing capacity for unbraked trailers is 750 kg.

Trailer loads

THE PERMISSIBLE WEIGHTS AND LOADS CAN ALSO BE OBTAINED FROM THE FOLLOWING SOURCES OF INFORMATION:

- Vehicle documents
- The identification plates of the trailer hitch, trailer and vehicle

If the figures differ, the lowest figure applies.

Maximum tongue weight

THE TONGUE WEIGHT MUST NOT EXCEED:

- 80 kg with a trailer load of 2,000 kg (vehicles with passenger vehicle approval)
- 100 kg with a trailer load of 2,000 kg (vehicles with commercial vehicle approval)
- 120 kg with a trailer load of 2,800 kg or 3,000 kg
- 140 kg with a trailer load of 3,500 kg

Lashing points and carrier systems

Loading capacity of the lashing points and tie-down eyes

NOTE
Risk of accident if the maximum loading capacity of the lashing points is exceeded

During maximum full-stop braking, for example, forces act which can multiply the weight of the load.

- ► If various lashing points are combined to secure a load, always take the maximum loading capacity of the weakest lashing point into account.
- ► Always use several lashing points to distribute and spread the load. Distribute the load on the lashing points evenly.

The rated tensile force is the maximum permissible tensile force.

Further information on the lashing points and tie-down eyes can be obtained in the "Transporting" section (⟶ page 596).

TIE-DOWN EYES

RATED TENSILE FORCE OF TIE-DOWN EYES

Tie-down eyes	Rated tensile force
Tourer	350 daN
Panel van	800 daN
Platform up to 3.5 t permissible gross weight	400 daN
Platform over 3.5 t permissible gross weight	800 daN

LOADING RAILS

RATED TENSILE FORCE OF LASHING POINTS IN THE LOAD COMPARTMENT

Lashing point	Rated tensile force
Loading rail on load compartment floor	500 daN
Lower loading rail on side wall	200 daN
Upper loading rail on side wall	125 daN

The values specified apply only to loads resting on the load compartment floor under the following conditions:

CONDITIONS:

- the load is secured to two lashing points on the rail.
- the distance to the nearest load-securing point on the same rail is approximately 1 m.

Information about roof luggage racks

WARNING
Risk of injury if maximum roof load is exceeded

The vehicle centre of gravity and the usual driving characteristics, as well as the steering and braking characteristics, will change.

If you exceed the maximum roof load, the driving characteristics, as well as the steering and braking characteristics, will be greatly impaired.

- Always comply with the maximum roof load and adjust your driving style.

WARNING
Danger of accident due to uneven loading

The driving characteristics, as well as steering and braking characteristics, may be greatly impaired.

- Load the vehicle evenly.
- Secure the load against sliding.

The driving, braking and steering characteristics of the vehicle will change with the type of load, the weight and the centre of gravity of the load.

NOTE
Risk of accident if the maximum permissible roof load is exceeded

If the weight of the roof luggage, including the roof rack, exceeds the maximum permissible roof load, there will be a risk of an accident.

- Ensure that the weight of the roof luggage and roof rack does not exceed the maximum permissible roof load.
- The roof rack supports must be arranged at an even distance from each other.

Further information about safety measures can be found in the "Transport" section (⟶ page 596).

MAX. ROOF LOAD/PAIRS OF ROOF RACK SUPPORTS

Vehicles with	Maximum roof load	Minimum number of pairs of supports
Roof (without platform)	300 kg	6
Roof (with platform)	50 kg	2
High roof (without platform)	150 kg	3
Crewcab	100 kg	2

This information applies if the load is distributed evenly across the entire roof area.

If the roof luggage rack is shorter, reduce the load proportionately. The maximum load per pair of roof rack supports is 50 kg.

The loading guidelines and other information about load distribution and load securing can be found in the "Transport" section (⟶ page 596).

Information about the ladder racks

WARNING
Risk of accident and injury if the tongue weight is exceeded

The carrier system may detach from the vehicle, thereby endangering other road users.

- Always comply with the permissible tongue weight when using a carrier.

MAXIMUM LOAD OF LADDER RACK

	Maximum load
Front ladder rack	200 kg
Rear ladder rack	100 kg

The details apply if the load is distributed evenly across the entire ladder rack surface.

The loading guidelines and other information about load distribution and load securing can be found in the "Transport" section (⟶ page 596).

Display messages and warning and indicator lamps

This interactive PDF works like a website – tap or click a button to jump straight to where you want to go.
You can return here at any time via the navigation bar at the top left.

Display messages

Warning and indicator lamps

Display messages

Introduction

NOTES ON DISPLAY MESSAGES

> ⚠ **WARNING**
> Risk of accident due to an instrument cluster malfunction
>
> In the event of a failure or malfunction of the instrument cluster, you will not recognise limitations in the functions of systems relevant to safety. This may impair operating safety.
>
> ► Park the vehicle safely as soon as possible and notify a qualified specialist workshop.

The on-board computer shows messages and warnings from specific systems on the instrument cluster display. Ensure that your vehicle is operating safely at all times.

Display messages with graphic symbols may appear in simplified form in the Owner's Manual and may differ from the symbols in the instrument cluster. The instrument cluster shows high-priority display messages in red. A warning tone will also sound for specific display messages.

Please act in accordance with the display messages and follow the additional notes in this Owner's Manual.

IN ADDITION, SYMBOLS ARE SHOWN FOR SOME DISPLAY MESSAGES:

- ⓘ Further information
- [×] Hiding display messages

You can select the respective symbol by swiping left or right on the left-hand Touch Control. Press ⓘ to display further information on the media display. Pressing [×] hides the display message.

You can hide display messages to be acknowledged by pressing the 'Back' button [↩] or with the left-hand Touch Control. The display messages will be saved to the message memory.

Rectify the cause of a display message as quickly as possible.

High-priority display messages cannot be hidden. The instrument cluster will show these display messages permanently until the cause of the display message has been rectified.

CALLING UP SAVED DISPLAY MESSAGES

The on-board computer saves specific display messages to the message memory. You can call up the saved display messages. Use the buttons on the left-hand control panel on the steering wheel.

► Swipe left or right on the Touch Control to select the Service menu.

► Swipe upwards or downwards on the Touch Control.
The bar will show the number of saved messages.
If no messages were saved, the display shows No messages.

► Confirm with the Touch Control and scroll through the stored messages by swiping upwards or downwards.

Occupant safety

Display messages	Possible causes/consequences and ▶ Solutions
Left window airbag Fault Consult workshop	* The restraint system is malfunctioning (⟶ page 139). **WARNING** Risk of injury or fatal injury due to a malfunction in the windowbag The windowbag might be triggered unintentionally or might not be triggered at all in the event of an accident. ▶ Have the windowbag checked and repaired immediately at a qualified specialist workshop. ▶ Consult a qualified specialist workshop immediately.
Right window airbag Fault Consult workshop	* The restraint system is malfunctioning (⟶ page 139). **WARNING** Risk of injury or fatal injury due to a malfunction in the windowbag The windowbag might be triggered unintentionally or might not be triggered at all in the event of an accident. ▶ Have the windowbag checked and repaired immediately at a qualified specialist workshop. ▶ Consult a qualified specialist workshop immediately.
Restraint system fault Consult workshop	* The restraint system is malfunctioning (⟶ page 139).

Display messages	Possible causes/consequences and ▶ Solutions
	WARNING Risk of injury due to malfunctions in the restraint system Components in the restraint system may be activated unintentionally or not deploy as intended in an accident. ▶ Have the restraint system checked and repaired immediately at a qualified specialist workshop. **IDENTIFYING A RESTRAINT SYSTEM FAULT:** • The restraint system warning lamp does not light up when the vehicle is switched on. • The restraint system warning lamp lights up continuously or repeatedly during a journey. ▶ Consult a qualified specialist workshop immediately.
 Front left fault Consult workshop	* The restraint system is malfunctioning (⟶ page 139). **WARNING** Risk of injury due to malfunctions in the restraint system Components in the restraint system may be activated unintentionally or not deploy as intended in an accident. ▶ Have the restraint system checked and repaired immediately at a qualified specialist workshop. **IDENTIFYING A RESTRAINT SYSTEM FAULT:** • The restraint system warning lamp does not light up when the vehicle is switched on. • The restraint system warning lamp lights up continuously or repeatedly during a journey. ▶ Consult a qualified specialist workshop immediately.

Driving and driving safety systems

Display messages	Possible causes/consequences and ▶ Solutions
Speed Limit Assist inoperative	* Speed Limit Assist is malfunctioning. ▶ Continue driving. or ▶ Stop the vehicle in accordance with the traffic conditions and restart the vehicle. ▶ If the display message does not disappear, consult a qualified specialist workshop.
Speed Limit Assist currently unavailable See Owner's Manual	* Speed Limit Assist is temporarily unavailable. ▶ Continue driving. When the causes have been eliminated, the system will be available again.
 Inoperative See Owner's Manual	* ABS and ESP® are malfunctioning. Other driving systems and driving safety systems (e.g. BAS) may also be malfunctioning. The brake system continues working with the normal effect. Braking distance may increase in an emergency braking situation. **WARNING** Risk of skidding if ABS and ESP® are malfunctioning The wheels may block during braking and ESP® does not perform any vehicle stabilization. The steerability and braking characteristics are heavily impaired and the braking distance may increase. In addition, other driving safety systems are switched off. ▶ Drive on carefully. ▶ Have ABS and ESP® checked immediately at a qualified specialist workshop.

Display messages	Possible causes/consequences and ▶ Solutions
	▶ Drive on carefully. ▶ Have ABS and ESP® checked immediately at a qualified specialist workshop.
 Currently unavailable See Owner's Manual	* ABS and ESP® are temporarily unavailable. Other driving systems and driving safety systems (e.g. BAS) may also be temporarily unavailable. The brake system continues working with the normal effect. Braking distance may increase in an emergency braking situation. **WARNING** Risk of skidding if ABS and ESP® are malfunctioning The wheels may lock during braking and ESP® does not perform any vehicle stabilisation. The steerability and braking characteristics are heavily impaired and the braking distance may increase. In addition, other driving safety systems are switched off. ▶ Drive carefully on a suitable stretch of road, making slight steering movements at a speed above 30 km/h. ▶ If the display message does not disappear, consult a qualified specialist workshop immediately. Drive carefully. ▶ Carefully drive some gentle curves at a speed greater than 30 km/h on a suitable stretch of road. ▶ If the display message does not disappear, consult a qualified specialist workshop immediately. Drive carefully when doing so.
 inoperative See Owner's Manual	* ESP® is malfunctioning Other driving systems and driving safety systems (e.g. BAS) may also be malfunctioning. The brake system continues working with the normal effect. Braking distance may increase in an emergency braking situation.

Display messages	Possible causes/consequences and ▶ Solutions
	WARNING Risk of skidding if ESP® is malfunctioning If ESP® is malfunctioning, ESP® cannot carry out vehicle stabilisation. In addition, other driving safety systems are switched off. ▶ Drive on carefully. ▶ Have ESP® checked at a qualified specialist workshop. ▶ Drive on carefully. ▶ Have ESP® checked at a qualified specialist workshop.
 Currently unavailable See Owner's Manual	* ESP® is temporarily unavailable. Other driving systems and driving safety systems may also be malfunctioning. **WARNING** Risk of skidding with faulty ESP® If ESP® is not available, ESP® will be unable to perform any stabilisation of the vehicle. In addition, other driving safety systems are switched off. ▶ Carefully navigate a few gentle bends at a speed greater than 30 km/h on a suitable stretch of road. ▶ If the display message does not disappear, consult a qualified specialist workshop immediately. Ensure the utmost of care if you continue to drive the vehicle to this end. ▶ Carefully navigate a few gentle bends at a speed greater than 30 km/h on a suitable stretch of road. ▶ If the display message does not disappear, consult a qualified specialist workshop immediately. Ensure the utmost of care if you continue to drive the vehicle to this end.

Display messages	Possible causes/consequences and ▶ Solutions
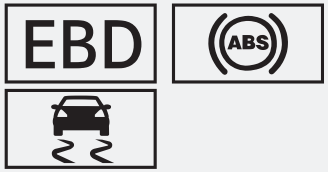 Inoperative See Owner's Manual	* EBD is unavailable due to a malfunction. This means that ABS, BAS, Hill Start Assist and ESP® as well as its driving safety systems, forexample, are also unavailable. ATTENTION ASSIST is deactivated and other driving systems could be automatically deactivated. The brake system continues to function normally, but without the functions listed above. **WARNING** Risk of skidding if EBD, ABS and ESP® are malfunctioning The wheels may block during braking and ESP® does not perform any vehicle stabilization. The steerability and braking characteristics are heavily impaired and the braking distance may increase. In addition, other driving safety systems are switched off. ▶ Drive on carefully. ▶ Have the brake system checked immediately at a qualified specialist workshop. ▶ Continue driving with caution. ▶ Have the brake system checked at a qualified specialist workshop immediately.
120 km/h Maximum speed exceeded	* For certain countries only: the maximum permissible speed has been exceeded. ▶ Drive more slowly.
Limit speed (winter tyres) XXX km/h	* You have reached the maximum permissible stored speed for winter tyres. It is not possible to exceed this speed.
Remain alert! (white display message)	* ATTENTION ASSIST has detected that the driver is averting their gaze from traffic events (⟶ page 420). A warning tone also sounds. ▶ Focus on the traffic events again.

Display messages	Possible causes/consequences and ▶ Solutions
ATTENTION ASSIST: Take a break!	* Based on certain criteria, ATTENTION ASSIST has detected fatigue or increasing lapses in concentration on the part of the driver. A warning tone also sounds. ▶ If necessary, take a break. On long journeys, take regular and timely breaks that allow you to rest properly.
ATTENTION ASSIST inoperative	* ATTENTION ASSIST has failed. ▶ Consult a qualified specialist workshop.
The camera's view of the driver is currently impeded Affected functions: see Owner's Manual	* **THE VIEW OF THE DRIVER CAMERA IS REDUCED. POSSIBLE CAUSES:** • Objects or stickers are projecting into the driver camera's field of vision. • The driver camera is dirty. ▶ Keep the driver camera's field of vision free. ▶ Clean the driver camera if necessary. Please comply with the notes on caring for the interior relating to the display (⟶ page 626).
	* The driver camera is malfunctioning. ▶ Consult a qualified specialist workshop.
LIM - - - km/h	* The limiter can temporarily not be engaged. When the causes have been eliminated, the system will be available again.
LIM Passive	* If you depress the accelerator pedal beyond the point of resistance (kickdown), the limiter will be switched to passive (⟶ page 382).

Display messages	Possible causes/consequences and ▶ Solutions
LIM Limiter Set speed exceeded	* You have exceeded the set speed with the variable limiter by over 3 km/h.
Limiter inoperative	* The limiter is malfunctioning. ▶ Consult a qualified specialist workshop.
 - - - km/h	* Cruise control cannot be activated as not all activation conditions have been met. ▶ Observe the activation conditions for cruise control (⟶ page 383).
Cruise control inoperative	* Cruise control is malfunctioning. ▶ Consult a qualified specialist workshop.
Cruise control and limiter inoperative	* Cruise control and the limiter are malfunctioning. ▶ Consult a qualified specialist workshop.

— km/h | * DSR is switched on, but is not active as you are driving faster than 18 km/h. If you drive at a speed below 18 km/h, DSR will automatically brake again to the set speed. |
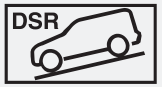
Off | * DSR was deactivated.
If it was not deactivated by the driver, e.g. due to a malfunction in the ESP®, a warning tone will also sound. |
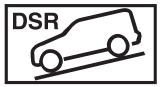
inoperative | * A warning tone also sounds. DSR is unavailable due to a malfunction.
▶ Consult a qualified specialist workshop. |

Display messages	Possible causes/consequences and ▶ Solutions
HOLD Off	* The HOLD function has been deactivated. The vehicle has started skidding. A warning tone also sounds. ▶ Switch the HOLD function on again later (⟶ page 406). * The HOLD function has been deactivated. An activation condition will no longer be met when the brake pedal is depressed. A warning tone also sounds. ▶ Check the activation conditions of the HOLD function (⟶ page 406).
Traffic Sign Assist inoperative	* Traffic Sign Assist is malfunctioning. ▶ Consult a qualified specialist workshop.
Traffic Sign Assist currently unavailable See Owner's Manual	* Traffic Sign Assist has been switched off and is temporarily inoperative. **THIS MAY BE DUE TO THE FOLLOWING CAUSES:** • The windscreen is dirty in the camera's field of vision. • Visibility is impaired due to heavy rain, snow or fog. If the causes mentioned above no longer apply, the display message will disappear and Traffic Sign Assist will be operational once again. If the display message does not disappear: ▶ Stop in accordance with the traffic conditions. ▶ Secure the vehicle against rolling away. ▶ Clean the windscreen.

Driver assistance systems

Display messages	Possible causes/consequences and ▶ Solutions
Temporarily unavailable Sensors dirty	* **FRONT AND CORNER RADARS (SUBSEQUENTLY REFERRED TO AS "SENSORS") ARE MALFUNCTIONING. POSSIBLE CAUSES:** • the sensors are dirty • heavy precipitation • extended country driving without other traffic, e.g.in the desert Driving systems and driving safety systems may be malfunctioning or temporarily unavailable. The brake system, steering and drive system will continue to function normally. ▶ Continue driving with caution. Once the causes of the problem have been rectified, the driving systems and driving safety systems will be available once again, and the corresponding symbols will be switched off. If the display message does not disappear: ▶ Stop in accordance with the traffic conditions. ▶ Clean all sensor covers from the outside (⟶ page 372). ▶ Restart the vehicle.

Display messages	Possible causes/consequences and ▶ Solutions
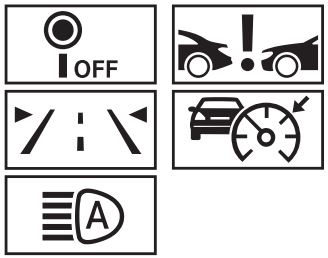 Camera view restricted See Owner's Manual	* **THE VIEW OF THE MULTIFUNCTION CAMERA IS RESTRICTED. POSSIBLE CAUSES:** • Dirt on the windscreen in the field of vision of the multifunction camera • Heavy precipitation or fog • Mist on the inside or outside of the windscreen: in certain weather conditions, mist can form on the inside or outside of the windscreen during cold times of the year in particular. ⓘ This mist on the windscreen will be removed automatically within a short time with the aid of a heater. The restriction is temporary. Driving systems and driving safety systems may be malfunctioning or temporarily unavailable. The brake system, steering and drive system will continue to function normally. ▶ Continue driving with caution. ▶ To remove the mist from the outside, wipe once (⟶ page 273). ▶ To remove the mist from the inside, press (⟶ page 288). Once the causes of the problem have been rectified, the driving systems and driving safety systems will be available once again, and the corresponding symbols will be switched off. If the display message does not disappear, even after a driving time of about 15 minutes: ▶ Stop in accordance with the traffic conditions. ▶ Clean the windscreen, especially in the position of the multifunction camera (⟶ page 372). ▶ Restart the vehicle.
Restricted during trailer operation	* When the trailer socket is occupied, some driving systems will be available only to a limited extent. ▶ Drive with particular caution if you are towing a trailer or a bicycle rack is mounted.

Display messages	Possible causes/consequences and ▶ Solutions
Moving-off information Assist inoperative	* Moving-off Information Assist is malfunctioning (⟶ page 433). ▶ Consult a qualified specialist workshop.
Active Distance Assist inoperative	* Active Distance Assist DISTRONIC is malfunctioning. Other driving systems and driving safety systems may also be malfunctioning. ▶ Continue driving with caution. or ▶ Stop the vehicle in accordance with the traffic conditions and restart the vehicle. ▶ If the display message does not disappear, consult a qualified specialist workshop.
Active Distance Assist currently unavailable See Owner's Manual	* A warning tone also sounds. Active Distance Assist DISTRONIC has been switched off and is temporarily inoperative. **THIS MAY BE DUE TO THE FOLLOWING CAUSES:** • The function is impaired due to heavy rain or snow. • The radar sensor system is temporarily inoperative, e.g. due to electromagnetic radiation close to TV or radio transmitting stations or other sources of radiation. • The system is outside the operating temperature range. • The on-board electrical system voltage is too low. If the causes mentioned above no longer apply, the display message will disappear and Active Distance Assist DISTRONIC will become operational once again. If the display message does not disappear: ▶ Stop in accordance with the traffic conditions. ▶ Secure the vehicle against rolling away. ▶ Restart the vehicle.

Display messages	Possible causes/consequences and ▶ Solutions
Active Distance Assist available again	* Active Distance Assist DISTRONIC is operational again after being temporarily unavailable. You can now switch Active Distance Assist DISTRONIC on again (⟶ page 392).
Blind Spot Assist and exit warning currently unavailable See Owner's Manual	* Blind Spot Assist is temporarily non-operational. **THIS MAY BE DUE TO THE FOLLOWING CAUSES:** • The sensors in the rear bumper are dirty. • The function is impaired due to heavy rain or snow. • The radar sensor system is temporarily non-operational, e.g. due to electromagnetic radiation close to TV or radio transmitting stations or other sources of radiation. • The system is outside the operating temperature range. If the causes mentioned above no longer apply, the display message will disappear and Blind Spot Assist will become operational once again. If the display message does not disappear: ▶ Stop in accordance with the traffic conditions. ▶ Secure the vehicle against rolling away. ▶ Switch off the vehicle. ▶ Clean the sensors in the rear bumper (⟶ page 624). ▶ Restart the vehicle.
Blind Spot Assist and exit warning inoperative	* Blind Spot Assist is malfunctioning. ▶ Consult a qualified specialist workshop.
Sideguard Assist currently unavailable	* Sideguard Assist is temporarily unavailable (⟶ page 431). The system limits have been reached (⟶ page 431).

Display messages	Possible causes/consequences and ▶ Solutions
	▶ Continue driving. When the causes have been eliminated, the system will be available again. or ▶ If the display message does not disappear, stop the vehicle in accordance with the traffic conditions and restart the vehicle. ▶ If necessary, clean the rear bumper. If the bumper is very dirty, the sensors in the bumper may malfunction.
Sideguard Assist inoperative	* Sideguard Assist is malfunctioning (⟶ page 431). ▶ Consult a qualified specialist workshop.
Active Lane Keeping Assist Reduced range of functions See Owner's Manual	* Active Lane Keeping Assist is available but restricted. ▶ Drive on. or ▶ Stop the vehicle in accordance with the traffic conditions and restart the vehicle. ▶ If the display message does not disappear: consult a qualified specialist workshop.
Active Lane Keeping Assist currently unavailable See Owner's Manual	* Active Lane Keeping Assist is temporarily unavailable. **THIS MAY BE DUE TO THE FOLLOWING CAUSES:** • The windscreen is dirty in the camera's field of vision. • Visibility is impaired due to heavy rain, snow or fog. • Lane markings are absent for a long period of time. • The lane markings are worn, dark or covered by dirt or snow, forexample. If the causes mentioned above no longer apply, the display message will disappear and Active Lane Keeping Assist will be operational again. If the display message does not disappear: ▶ Stop in accordance with the traffic conditions.

Display messages	Possible causes/consequences and ▶ Solutions
	▶ Secure the vehicle against rolling away. ▶ Clean the windscreen.
Active Lane Keeping Assist inoperative	* Active Lane Keeping Assist is malfunctioning . ▶ Drive on. or ▶ Stop the vehicle in accordance with the traffic conditions and restart the vehicle. ▶ If the display message does not disappear: consult a qualified specialist workshop.
Active Steering Assist currently unavailable See Owner's Manual	* Active Steering Assist is temporarily unavailable. The ambient conditions are outside the system limits (⟶ page 398). When the ambient conditions are within the system limits, the system will be available again. ▶ Continue driving. ▶ Check the tyre pressure if necessary.
	* Active Steering Assist has reached the system limits (⟶ page 398). You have not steered independently for a considerable period of time. ▶ Take over the steering and continue driving in accordance with the traffic conditions.
 Emergency stop initiated	* Your hands are not on the steering wheel. An emergency stop is initiated (⟶ page 398). ▶ Perform a deliberate steering movement. ▶ Accelerating or braking. Information on cancelling an emergency stop (⟶ page 400).

Display messages	Possible causes/consequences and ▶ Solutions
Active Steering Assist currently unavailable due to multiple emergency stops	* Active Steering Assist is temporarily unavailable due to multiple emergency stops. ▶ Take over the steering and stop in accordance with the traffic conditions. ▶ Switch the vehicle off and back on again. Active Steering Assist is available once more.
Active Steering Assist inoperative	* Active Steering Assist is malfunctioning. Active Distance Assist DISTRONIC remains available. ▶ Continue driving. or ▶ Stop the vehicle in accordance with the traffic conditions and restart the vehicle. ▶ If the display message does not disappear, consult a qualified specialist workshop.
Active Brake Assist Range of functions currently reduced See Owner's Manual	* Active Brake Assist may be temporarily unavailable or only partially available. **THIS MAY BE DUE TO THE FOLLOWING CAUSES:** • The sensors in the front bumper are dirty. • The area of the windscreen where the camera is located is dirty. • The function is impaired due to heavy rain or snow. • The radar sensor system is temporarily non-operational, e.g. due to electromagnetic radiation close to TV or radio transmitting stations or other sources of radiation. • The system is outside the operating temperature range. • The on-board electrical system voltage is too low. If the causes mentioned above no longer apply, the display message will disappear. Active Brake Assist is operational again. If the display message does not disappear: ▶ Stop in accordance with the traffic conditions. ▶ Secure the vehicle against rolling away.

Display messages	Possible causes/consequences and ▶ Solutions
	▶ Switch off the vehicle. ▶ Clean the area of the windscreen where the camera is located (⟶ page 624). ▶ Clean the sensors in the front bumper (⟶ page 624). ▶ Start the vehicle again.
Active Brake Assist Reduced range of functions See Owner's Manual	* Active Brake Assist may be temporarily unavailable or only partially available. ▶ Continue driving with caution. or ▶ Stop the vehicle in accordance with the traffic conditions and restart the vehicle. ▶ If the display message does not disappear, consult a qualified specialist workshop.

Parking assistance systems

Display messages	Possible causes/consequences and ▶ Solutions
PARKTRONIC inoperative See Owner's Manual	* Parking Assist PARKTRONIC is malfunctioning. When the causes have been eliminated, the system will be available again. ▶ Continue driving while paying attention to the vehicle's surroundings. or ▶ Stop the vehicle in accordance with the traffic conditions and restart the vehicle. ▶ If the display message still appears, consult a qualified specialist workshop.

Climate control

Display messages	Possible causes/consequences and ▶ Solutions
Air conditioning system fault See Owner's Manual	* The function of the climate control system is temporarily restricted. The quantity of air and flow of fresh air are controlled automatically. ▶ Have the climate control system checked at a qualified specialist workshop.
Currently unavailable Low battery	* The on-board electrical system voltage is too low. The hot-water auxiliary heating (stationary heater) has switched itself off or cannot be switched on. ▶ Drive a lengthy distance. The battery will be charged. The hot-water auxiliary heating (stationary heater) will be operational again as soon as the on-board electrical system voltage is sufficient.
Currently unavailable Refuel	* There is too little fuel in the fuel tank. The hot-water auxiliary heater (stationary heater) cannot be switched on. ▶ Refuel the vehicle.
Inoperative See Owner's Manual	* The hot-water auxiliary heater (stationary heater) is malfunctioning. ▶ When the vehicle is stationary on a level surface and the engine has cooled down, make up to four attempts to switch on the hot-water auxiliary heater (stationary heater), waiting several minutes between attempts (⟶ page 294). If the hot-water auxiliary heater (stationary heater) does not switch on: ▶ Consult a qualified specialist workshop.

Engine

Display messages	Possible causes/consequences and ▶ Solutions
Top up coolant See Owner's Manual	* The coolant level is too low.

Display messages	Possible causes/consequences and ▶ Solutions
	NOTE Engine damage due to insufficient coolant ▶ Avoid long journeys with insufficient coolant. ▶ Top up with coolant, following the notes on coolant (⟶ page 613). If you frequently need to top up the coolant: ▶ Have the engine cooling system checked at a qualified specialist workshop.
 Top up coolant urgently See Owner's Manual	* The coolant level is too low. **NOTE** Engine damage due to insufficient coolant ▶ Avoid long journeys with insufficient coolant. ▶ Immediately top up with coolant, following the notes on coolant (⟶ page 613). If you frequently need to top up the coolant: ▶ Have the engine cooling system checked at a qualified specialist workshop.
	* The fan motor is defective. ▶ Check the coolant temperature display on the instrument cluster. If the coolant temperature is lower than the maximum value indicated below, you can continue driving to the next qualified specialist workshop. Avoid high engine loads, e.g.driving in mountainous terrain or stop-and-go driving. During normal driving and if the coolant level is correct, the display is permitted to rise to 120°C.

Display messages	Possible causes/consequences and ▶ Solutions
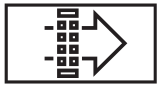 Replace air filter	* The engine air filter is dirty and must be replaced. ▶ Consult a qualified specialist workshop.
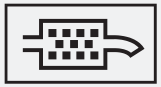 Diesel particulate filter Drive at high engine speeds See Owner's Manual	* Automatic regeneration of the diesel particulate filter is not sufficient or is malfunctioning. ▶ Drive at an engine speed above 2000 rpm until the display message disappears. If the display message does not go out after approximately 20 minutes, have the malfunction rectified immediately at a qualified specialist workshop.
 Add 1 litre engine oil when next refuelling	* The engine oil level has dropped to the minimum level. **NOTE** Engine damage caused by driving with insufficient engine oil ▶ Avoid long journeys with insufficient engine oil. ▶ Check the oil level at the next refuelling stop (⟶ page 45). ▶ If necessary, top up the engine oil (⟶ page 610). If engine oil frequently needs to be topped up: ▶ Have the engine checked at a qualified specialist workshop.
 Check engine oil level when next refuelling	* A warning tone also sounds. The oil level in your vehicle has fallen to the minimum. **NOTE** Engine damage caused by driving with insufficient engine oil ▶ Avoid long journeys with insufficient engine oil.

Display messages	Possible causes/consequences and ▶ Solutions
	▶ Check the oil level when next refuelling, at the latest (⟶ page 45). ▶ If necessary, top up the engine oil (⟶ page 610). If engine oil frequently needs to be topped up: ▶ Have the engine checked at a qualified specialist workshop.
Engine oil level Stop Switch off the vehicle	* The oil level is too low. There is a risk of engine damage. ▶ Stop the vehicle immediately in accordance with the traffic conditions and switch it off. ▶ Secure the vehicle against rolling away. ▶ Check the oil level (⟶ page 45). ▶ If necessary, top up the engine oil (⟶ page 610).
Engine oil pressure Stop Switch off the vehicle	* The oil pressure is too low. **NOTE** Engine damage caused by driving with insufficient oil pressure ▶ Avoid driving with insufficient oil pressure. ▶ Stop the vehicle immediately in accordance with the traffic conditions. Do not continue driving! ▶ Switch off the vehicle. ▶ Contact a qualified specialist workshop.
Engine oil level cannot be measured	* The electrical connection to the oil level sensor has been interrupted or the oil level sensor is faulty. ▶ Consult a qualified specialist workshop.

Display messages	Possible causes/consequences and ▶ Solutions
Engine oil level Reduce oil level	* The engine oil level is too high. **NOTE** Engine damage caused by driving with excess engine oil ▶ Avoid long journeys with excess engine oil. ▶ Consult a qualified specialist workshop immediately and have the engine oil level reduced.
Fuel filter Fault Consult workshop	* There is water in the fuel filter. The water must be drained off. ▶ Consult a qualified specialist workshop.

AdBlue® (vehicles with passenger vehicle registration)

Display messages	Possible causes/consequences and ▶ Solutions
Top up AdBlue See Owner's Manual	* The AdBlue® level has fallen into the reserve range. ▶ Top up with at least 8 l of AdBlue® immediately (⟶ page 37).
Top up AdBlue Limp mode in XXX km See Owner's Manual	* The low AdBlue® reserve will lead to a speed restriction in correlation with the remaining distance displayed. ▶ Top up with at least 8 l of AdBlue® immediately (⟶ page 37).

Display messages	Possible causes/consequences and ▶ Solutions
Top up XX,X l AdBlue Limp mode: max. XXX km/h No start in XXX km	* The AdBlue® reserve is sufficient only for the distance displayed. ▶ Top up with at least 8 l of AdBlue® immediately (⟶ page 37). ⓘ The message disappears after roughly one minute of travelling at a speed greater than 15 km/h.
AdBlue system fault Engine start not possible See Owner's Manual	* The AdBlue® tank is empty. You can no longer start the vehicle. ▶ Top up with at least 8 l of AdBlue® immediately (⟶ page 37). ▶ Switch on the vehicle. You can re-start the vehicle after around one minute.
AdBlue system fault See Owner's Manual	* The AdBlue® system is malfunctioning. ▶ Consult a qualified specialist workshop immediately.
AdBlue system fault See Owner's Manual	* The AdBlue® system is malfunctioning. ▶ Consult a qualified specialist workshop immediately.
AdBlue system fault Limp mode in XXX km See Owner's Manual	* The AdBlue® system is malfunctioning. The system fault will restrict the speed to a maximum of 20 km/h. After the distance displayed has been covered, it will no longer be possible to start the vehicle. ▶ Consult a qualified specialist workshop immediately.
AdBlue system fault Limp mode: max. XXX km/h Start not poss. in XXX km	* A warning tone also sounds. The AdBlue® system is malfunctioning. You may continue to drive the displayed distance at a maximum speed of 20 km/h. If you subsequently switch off the engine, the engine management system will prevent the engine from being started again. ▶ Continue driving to a qualified specialist workshop.

Display messages	Possible causes/consequences and ▶ Solutions
	or ▶ Stop the vehicle in accordance with the traffic conditions and consult a qualified specialist workshop.
AdBlue system fault Engine start not possible See Owner's Manual	* The AdBlue® system is malfunctioning. You can no longer start the vehicle. ▶ Notify a qualified specialist workshop immediately.

AdBlue® (vehicles with lorry registration)

Display messages	Possible causes/consequences and ▶ Solutions
Top up AdBlue See Owner's Manual	* The AdBlue® level has fallen into the reserve range. ▶ Top up with at least 8 l of AdBlue® immediately (⟶ page 37).
Top up AdBlue Performance reduced	* The AdBlue® level has fallen into the reserve range. The power is restricted to 75% of engine torque. ▶ Top up with at least 8 l of AdBlue® immediately (⟶ page 37).
Top up AdBlue Limp-home mode after restart: max. XXX km/h	* The next time the vehicle is started, the low AdBlue® reserve will restrict the speed to a maximum of 20 km/h. ▶ Top up with at least 8 l of AdBlue® immediately (⟶ page 37).

Display messages	Possible causes/consequences and ▶ Solutions
Top up AdBlue Limp-home mode: max. XXX km/h	* The AdBlue® reserve is depleted, which means the speed will be restricted to a maximum of 20 km/h. ▶ Top up with at least 8 l of AdBlue® immediately (⟶ page 37). ▶ Switch on the vehicle.
AdBlue system fault See Owner's Manual	* The AdBlue® system is malfunctioning. ▶ Consult a qualified specialist workshop immediately.
AdBlue system fault Reduced power	* The AdBlue® system is malfunctioning. The engine's power is restricted by means of its maximum torque being limited to 75% of the value of fault-free operation. ▶ Consult a qualified specialist workshop immediately.
AdBlue system fault Limp-home mode after restart: max. XXX km/h	* The AdBlue® system is malfunctioning. The next time the vehicle is started, the system fault will restrict the speed to a maximum of 20 km/h. ▶ Consult a qualified specialist workshop immediately.
AdBlue system fault Limp mode: max. XXX km/h	* The AdBlue® system is malfunctioning. The system fault will restrict the speed to a maximum of 20 km/h. ▶ Notify a qualified specialist workshop immediately.

Brakes

Display messages	Possible causes/consequences and ▶ Solutions
Check brake pads See Owner's Manual	* The brakepads have reached their wear limit.

Display messages	Possible causes/consequences and ▶ Solutions
	WARNING Risk of accident due to restricted braking power When the brake pads have reached their wear limit, the braking power may be restricted. ▶ Drive on carefully. ▶ Have the brake system checked immediately at a qualified specialist workshop. ▶ Consult a qualified specialist workshop.
 Check brake fluid level	* There is insufficient brake fluid in the brake fluid reservoir. **WARNING** Risk of an accident due to low brake fluid level If the brake fluid level is too low, the braking effect and the braking characteristics may be impaired. ▶ Stop the vehicle as soon as possible, paying attention to road and traffic conditions. Do not continue driving. ▶ Consult a qualified specialist workshop. ▶ Do not top up the brake fluid. ▶ Contact a qualified specialist workshop. ▶ Do not top up the brake fluid.

Display messages	Possible causes/consequences and ▶ Solutions
To release the parking brake: switch on the vehicle	* The red indicator lamp (P) is lit. You have attempted to release the electric parking brake with the vehicle switched off. ▶ Switch on the vehicle.
Release parking brake	* The red (P) indicator lamp on the instrument cluster is flashing. A warning tone also sounds. You are driving with the parking brake applied or performing emergency braking using the parking brake. ▶ Release the parking brake (⟶ page 363).
Parking brake See Owner's Manual (manual parking brake)	* The yellow (P) warning lamp and the red (P) indicator lamp light up. The parking brake is malfunctioning. **Releasing the parking brake:** ▶ Switch the vehicle off and on again. ▶ Release the parking brake. If the parking brake still cannot be released: ▶ Do not drive on. ▶ Contact a qualified specialist workshop. * The red (P) indicator lamp flashes, and the yellow (P) warning lamp lights up. The parking brake is malfunctioning. ▶ Switch the vehicle off and on again. ▶ Release or apply the parking brake. If the red (P) indicator lamp continues flashing:

Display messages	Possible causes/consequences and ▶ Solutions
	▶ Do not drive on. ▶ Secure the vehicle against rolling away. ▶ Engage first gear. ▶ Turn the front wheels towards the kerb. ▶ Contact a qualified specialist workshop.
Parking brake See Owner's Manual (electric parking brake)	* The yellow indicator lamp is lit. The electric parking brake is malfunctioning. **To apply:** ▶ Switch the vehicle off and back on again. ▶ Apply the electric parking brake manually (⟶ page 368). If it is not possible to apply the electric parking brake: ▶ Consult a qualified specialist workshop. ▶ Where necessary, also secure the parked vehicle against rolling away. * The yellow and red indicator lamps are lit. The electric parking brake is malfunctioning. **To release:** ▶ Switch the vehicle off and back on again. ▶ Release the electric parking brake manually (⟶ page 368). or ▶ Release the electric parking brake automatically (⟶ page 367). If it is still not possible to release the electric parking brake: ▶ Do not continue driving! Contact a qualified specialist workshop. * The yellow indicator lamp is lit, and the red indicator lamp is flashing. The electric parking brake is malfunctioning.

Display messages	Possible causes/consequences and ▶ Solutions
	The electric parking brake could not be applied or released. ▶ Switch the vehicle off and back on again. **To apply:** ▶ Release and then apply the electric parking brake manually (⟶ page 368). **To release:** ▶ Apply and then release the electric parking brake manually. If it is not possible to apply the electric parking brake or the red (P) indicator lamp continues to flash: ▶ Do not continue driving! Contact a qualified specialist workshop. ▶ Where necessary, also secure the parked vehicle against rolling away.
	* The yellow (P) indicator lamp is lit, and the red (P) indicator lamp flashes for approximately ten seconds after the electric parking brake has been applied or released. It then remains lit or goes out. The electric parking brake is malfunctioning. **If the state of charge is too low:** ▶ Charge the 12 V battery (⟶ page 65). **To apply:** ▶ Switch off the vehicle. The electric parking brake will be applied automatically. ▶ Apply the electric parking brake manually. If you do not want the electric parking brake to be applied, e.g. at an automatic car wash or when the vehicle is being towed, leave the vehicle switched on. This does not include having the vehicle towed with the rear axle raised. If the electric parking brake is not applied automatically:

Display messages	Possible causes/consequences and ▶ Solutions
	▶ Switch the vehicle off and back on again. ▶ Release and then apply the electric parking brake manually (⟶ page 368). If it is not possible to apply the electric parking brake: ▶ Consult a qualified specialist workshop. ▶ Where necessary, also secure the parked vehicle against rolling away. **To release:** ▶ If the conditions for automatic release are fulfilled and the electric parking brake is not released automatically, release the electric parking brake manually (⟶ page 368). If it is still not possible to release the electric parking brake: ▶ Do not continue driving! Contact a qualified specialist workshop.
 Incline too steep See Owner's Manual	* The on-board electrical system voltage is low or a malfunction has occurred in the system; the holding force may not be sufficient for the incline. ⚠ **WARNING** Risk of accident due to insufficient holding force of the electric parking brake If the electric parking brake does not have sufficient holding force on a steep incline, the vehicle may roll away. ▶ Park the vehicle on a level surface only and secure it against rolling away. ▶ Vehicles with automatic transmission: shift the transmission to position P. ▶ Vehicles with manual transmission: engage first gear. Observe the notes on parking the vehicle (⟶ page 361).

Tyres

Display messages	Possible causes/consequences and ▶ Solutions
Correct the tyre pressure	* The yellow warning lamp [(!)] also lights up. The tyre pressure is too low for at least one tyre, or the difference in tyre pressure between the individual wheels is too great. The wheel position is shown. ▶ Check the tyre pressure at the next opportunity (⟶ page 36). ▶ Correct the tyre pressure as necessary. ▶ Restart the tyre pressure monitoring system (⟶ page 680).
Check tyre(s)	* A warning tone will sound, and the yellow warning lamp [(!)] will light up. The tyre pressure in one or more tyres has dropped significantly. The wheel position is shown. ⚠ **WARNING** Risk of an accident due to insufficient tyre pressure • The tyres can burst. • The tyres can wear excessively and/or unevenly. • The driving characteristics as well as the steering and braking may be greatly impaired. You could then lose control of the vehicle. ▶ Observe the recommended tyre pressures. ▶ Adjust the tyre pressure if necessary. ▶ Stop the vehicle without steering or braking suddenly. Pay attention to the traffic conditions.

Display messages	Possible causes/consequences and ▶ Solutions
	▶ Secure the vehicle against rolling away. ▶ Check the tyres. If necessary, replace the wheel (⟶ page 688). ▶ Check the tyre pressure (⟶ page 36). Correct the tyre pressure as necessary.
Warning Tyre malfunction	* The yellow warning lamp [ⓘ] also lights up. The tyre pressure for one or more tyres has dropped suddenly. The wheel position is shown. ⚠ **WARNING** Risk of an accident from driving with a flat tyre • The tyres can overheat and cause a fire. • The driving characteristics as well as the steering and braking may be greatly impaired. You could then lose control of the vehicle. ▶ Do not drive on with a flat tyre. ▶ Observe the notes on flat tyres. ▶ Stop the vehicle without steering or braking suddenly. Pay attention to the traffic conditions. ▶ Secure the vehicle against rolling away. ▶ Check the tyres. If necessary, replace the wheel (⟶ page 688).
Tyre pressure monitoring system currently unavailable	* The yellow warning lamp [ⓘ] flashes for about one minute and then lights up continuously. Due to a source of radio interference, no signals from the tyre pressure sensors are being received. The tyre pressure monitoring system is temporarily malfunctioning. The tyre pressure monitoring system will restart automatically as soon as the cause has been rectified.

Display messages	Possible causes/consequences and ▶ Solutions
Tyre pressure sensor system missing	* The yellow warning lamp flashes for about one minute and then lights up continuously. There is no signal from the tyre pressure sensor for at least one tyre. The display is not showing any pressure value for the respective tyre. ▶ Have the faulty tyre pressure sensor replaced at a qualified specialist workshop.
Tyre pressure monitoring system inoperative No tyre pressure sensors	* The yellow warning lamp flashes for about one minute and then lights up continuously. The wheels fitted do not have suitable tyre pressure sensors. The tyre pressure monitoring system is deactivated. ▶ Fit wheels with suitable tyre pressure sensors. The tyre pressure monitoring system will switch on after a few minutes of driving.
Tyre pressure monitoring system inoperative	* The yellow warning lamp flashes for about one minute and then lights up continuously. The tyre pressure monitoring system is malfunctioning. ▶ Consult a qualified specialist workshop.

Battery

Display messages	Possible causes/consequences and ▶ Solutions
 Stop vehicle See Owner's Manual	* The 12 V battery is no longer being charged and the state of charge is too low. **NOTE** Possible engine damage if you continue driving ▶ Do not continue driving under any circumstances. ▶ Consult a qualified specialist workshop. ▶ Stop the vehicle immediately in accordance with the traffic conditions. Do not continue driving!

Display messages	Possible causes/consequences and ▶ Solutions
	▶ Switch off the vehicle. ▶ Contact a qualified specialist workshop.
 Stop vehicle but do not switch off	* The state of charge for the 12 V battery is too low. ▶ Stop the vehicle immediately in accordance with the traffic conditions. Do not continue driving! ▶ Leave the engine running. ▶ If the display message disappears: continue driving. ▶ If the display message does not disappear: consult a qualified specialist workshop.
 12 V battery See Owner's Manual	* The vehicle is off and the state of charge of the 12 V battery is too low. ▶ Switch off electrical consumers that are not required. ▶ Drive for 30–60 mins. or ▶ Charge the 12 V battery when stationary (⟶ page 65). * If the message appears while the vehicle is switched on, this indicates an on-board electrical system malfunction. ▶ Consult a qualified specialist workshop.
 Stop vehicle Leave vehicle on to charge the 12 V battery	* The state of charge of the 12 V battery is too low. ▶ Stop the vehicle immediately in accordance with the traffic conditions. Do not continue driving! ▶ Leave the vehicle running. ▶ If the display message disappears: drive on. ▶ If the display message does not disappear: consult a qualified specialist workshop.

Display messages	Possible causes/consequences and ▶ Solutions
 See Owner's Manual	* A warning tone also sounds. **THE BATTERY IS NO LONGER BEING CHARGED FOR ONE OF THE FOLLOWING REASONS:** • defective alternator • torn poly-V belt • malfunction in the electronics **NOTE** Possible engine damage if you continue driving ▶ Do not continue driving under any circumstances. ▶ Consult a qualified specialist workshop. ▶ Stop the vehicle immediately in accordance with the traffic conditions and switch it off. Do not continue driving. If you do, the engine may overheat. ▶ Secure the vehicle against rolling away. ▶ Contact a qualified specialist workshop.

Key

Display messages	Possible causes/consequences and ▶ Solutions
Place the key in the marked space See Owner's Manual	* Key detection is malfunctioning. ▶ Change the key's position in the vehicle. ▶ Place the key in the slot for starting with the key (⟶ page 311).

Display messages	Possible causes/consequences and ▶ Solutions
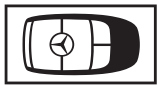 Change key battery	* The key battery is flat. ▶ Replace the battery (⟶ page 175).
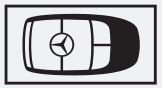 Key not detected (white display message)	* The key is currently not detected. ▶ Change the key's position in the vehicle. ▶ Try to start the vehicle. ▶ If the key is still not detected, place it in the marked space for starting with the key (⟶ page 311). ▶ Start the vehicle.
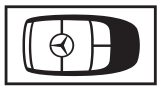 Key not detected (red display message)	* The key can no longer be detected during a journey and may no longer be in the vehicle. **IF THE KEY IS NO LONGER IN THE VEHICLE AND YOU SWITCH OFF THE VEHICLE:** • You can no longer start the vehicle. • You cannot centrally lock the vehicle. ▶ Ensure that the key is in the vehicle. If the key is in the vehicle and is still not detected: ▶ Stop the vehicle immediately in accordance with the traffic conditions. ▶ Place the key in the marked space for starting with the key (⟶ page 311). The key battery is at low capacity or flat. ▶ Check the battery via the indicator lamp (⟶ page 172). ▶ Replace the key battery as required (⟶ page 175).

Display messages	Possible causes/consequences and ▶ Solutions
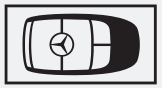 Key not detected Place key back in driver's area (white display message)	* The key is not in the driver's area of the vehicle (⟶ page 172). ▶ Change the key's position in the vehicle. ▶ If necessary, stop the vehicle immediately in accordance with the traffic conditions. ▶ Start the vehicle with the key in the marked space (⟶ page 311).
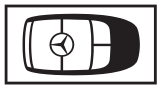 Key not detected Place key back in driver's area (red display message)	* The key is not in the driver's area of the vehicle (⟶ page 172). ▶ Change the key's position in the vehicle. ▶ If necessary, stop the vehicle immediately in accordance with the traffic conditions. ▶ Start the vehicle with the key in the marked space (⟶ page 311).
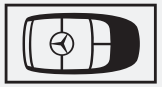 Replace key	* Have the key replaced. ▶ Consult a qualified specialist workshop.

Vehicle

Display messages	Possible causes/consequences and ▶ Solutions
Wiper fault	* The windscreen wiper is malfunctioning. ▶ Restart the vehicle. If the display message still appears: ▶ Consult a qualified specialist workshop.

Display messages	Possible causes/consequences and ▶ Solutions
	* A warning tone also sounds. The bonnet is open. **WARNING** Risk of accident due to driving with the bonnet unlocked The bonnet may open and block your view. ▶ Never release the bonnet when driving. ▶ Before every trip, ensure that the engine bonnet is locked. ▶ Stop the vehicle immediately in accordance with the traffic conditions. ▶ Secure the vehicle against rolling away. ▶ Close the bonnet.
	* At least one door is open. In addition, a warning tone sounds while the vehicle is in motion. The display shows the open door or doors. ▶ Close all the doors.
 Step not retracted See Owner's Manual	* The electric step is not retracted, or is only partially retracted. ▶ Ensure there is sufficient clearance for the electric step. ▶ Open or close the sliding door again. ▶ If the electric step does not completely retract again, push it in manually (emergency release) (⟶ page 200).
 Step not extended See Owner's Manual	* The electric step is not extended, or is only partially extended. ▶ Ensure there is sufficient clearance for the electric step.

Display messages	Possible causes/consequences and ▶ Solutions
	▶ Open or close the sliding door again. ▶ If the electric step does not completely extend again, push it in manually (emergency release) (⟶ page 200). ▶ Inform passengers that the step is unavailable before they exit the vehicle.
 Vehicle is operational Switch off vehicle before exiting	* You are about to exit a vehicle which is ready to drive. ▶ Switch off the vehicle, secure it against rolling backwards or forwards and take the key with you. ▶ If you do not leave the vehicle, switch off the electrical consumers, e.g. the seat heating. Otherwise, the 12-V battery may discharge and starting the engine may be possible only with the help of a second battery (jump start).
 Top up washer fluid	* The washer fluid level in the washer fluid reservoir has dropped below the minimum. ▶ Top up the washer fluid (⟶ page 41).
 Before starting the vehicle, turn the steering wheel	* **Vehicle with manual transmission:** the electric steering lock was unable to unlock the steering ▶ Switch off the vehicle. ▶ To release the tension, turn the steering wheel slightly to the left and right. ▶ Switch on the vehicle. If the problem persists: ▶ Contact a qualified specialist workshop.
 Steering fault See Owner's Manual	* The electric steering lock is malfunctioning. The steering may be locked by the electric steering lock.

Display messages	Possible causes/consequences and ▶ Solutions
	WARNING Risk of accident if steering capability is impaired If the steering does not function as intended, the vehicle's operating safety is jeopardised. ▶ Pull over and stop the vehicle safely as soon as possible, paying attention to road and traffic conditions. Do not continue driving under any circumstances. ▶ Consult a qualified specialist workshop. ▶ Stop the vehicle immediately in accordance with the traffic conditions. Do not continue driving! ▶ Contact a qualified specialist workshop.
Steering fault Drive carefully Consult workshop	* A power steering malfunction has occurred. Steering characteristics may be impaired as a result. ▶ Continue driving with caution. ▶ Consult a qualified specialist workshop.
Steering fault Stop immediately See Owner's Manual	* The steering is malfunctioning. Steerability is heavily impaired. **WARNING** Risk of accident if steering capability is impaired If the steering does not function as intended, the vehicle's operating safety is jeopardised. ▶ Pull over and stop the vehicle safely as soon as possible, paying attention to road and traffic conditions. Do not continue driving under any circumstances. ▶ Consult a qualified specialist workshop.

Display messages	Possible causes/consequences and ▶ Solutions
	▶ Stop the vehicle immediately in accordance with the traffic conditions. Do not continue driving! ▶ Contact a qualified specialist workshop.
 Steering fault Increased physical effort See Owner's Manual	* The steering power assistance is malfunctioning. **WARNING** Risk of an accident due to altered steering characteristics If the power assistance of the steering fails partially or completely, you will need to use more force to steer. ▶ If safe steering is possible, drive on carefully. ▶ Visit or consult a qualified specialist workshop immediately. ▶ If safe steering is possible, drive on carefully. ▶ Visit or consult a qualified specialist workshop immediately.
Risk of rolling Driver's seat not occupied Transmission not in P	* A warning tone also sounds. The driver's seat has been vacated and the transmission is in position N, R or D. ▶ Shift the transmission to position P . ▶ Secure the vehicle against rolling backwards or forwards.
To start engine, shift to drive range P or N	* You have attempted to start the vehicle in transmission position R or D. ▶ Shift the transmission to position P or N.
Apply brake to deselect drive range P	* You have tried to shift the transmission to position D, R or N without applying the brake. ▶ Depress the brake pedal.
Apply brakes and start vehicle to shift out of drive range P or N	* You have attempted to shift the transmission out of park position P or neutral N and into another transmission position. ▶ Depress the brake pedal.

Display messages	Possible causes/consequences and ▶ Solutions
	▶ Start the vehicle. ▶ Change the transmission position.
To select drive range R, depress brake	* You have tried to shift the transmission to position R without applying the brake. ▶ Depress the brake pedal. ▶ Shift the transmission to position R.
N permanently active Risk of rolling	* A warning tone also sounds. The transmission was shifted to position N as the vehicle was rolling or travelling. ▶ To stop, depress the brake pedal and, when the vehicle is at a standstill, shift the transmission to position P. ▶ To continue your journey, shift the transmission to position R or D.
Risk of rolling Driver's door open Transmission not in P	* A warning tone also sounds. The driver's door is open and the transmission is in position N, R or D. ▶ Shift the transmission to position P . ▶ Secure the vehicle against rolling backwards or forwards.
Consult workshop without changing the drive range	* A warning tone also sounds. You can no longer change the transmission position due to a fault. If transmission position D has been selected: ▶ Consult a qualified specialist workshop without changing the gear position. If transmission position P, R or N has been selected: ▶ Notify a qualified specialist workshop.
Reversing not possible Consult workshop	* The transmission is malfunctioning. Transmission position R cannot be selected. ▶ Notify a qualified specialist workshop.
Only select drive range P when vehicle is stationary	* The vehicle is still moving.

Display messages	Possible causes/consequences and ▶ Solutions
	▶ Stop in accordance with the traffic conditions. ▶ Shift the transmission to position P .
4MATIC currently unavailable	* All-wheel drive is temporarily suspended from the system as the limit values have been reached due to increased friction. ▶ Where possible, continue driving with caution, otherwise wait for a short while. As soon as the protective functions are deactivated, all-wheel drive will be available again.
4MATIC inoperative	* All-wheel drive is not available. Possible causes: faulty cable or faulty transfer case. ▶ Consult a workshop.
Transmission fault Stop	* The transmission is malfunctioning. The transmission automatically switches to neutral N. ▶ Stop the vehicle immediately in accordance with the traffic conditions. ▶ Shift the transmission to position P . ▶ Inform a qualified specialist workshop.
SOS NOT READY	* The Mercedes-Benz emergency call system is not available. **POSSIBLE CAUSES FOR THIS INCLUDE:** • The vehicle is switched off. • The Mercedes-Benz emergency call system is malfunctioning. ▶ Switch on the vehicle. If an emergency call is unavailable, a message to this effect will appear on the instrument cluster. ▶ Consult a qualified specialist workshop.

Display messages	Possible causes/consequences and ▶ Solutions
	ⓘ You can find more information on the regional availability of the Mercedes-Benz emergency call system at: http://www.mercedes-benz.com/connect_ecall

Lights

Display messages	Possible causes/consequences and ▶ Solutions
Left dipped beam	* The left low beam is malfunctioning. ▶ Consult a qualified specialist workshop.
Fault See Owner's Manual	* The exterior lighting is malfunctioning. ▶ Consult a qualified specialist workshop. * Vehicles with trailer hitch: a fuse may be defective. **NOTE** Electrical fuses ▶ Observe the information in the supplement. You may otherwise fail to recognise dangers. ▶ Check the fuses and replace any blown fuses (see "Fuse assignment" supplement). If the display continues to show the message: ▶ Consult a qualified specialist workshop.

Display messages	Possible causes/consequences and ▶ Solutions
Automatic driving lights inoperative	* The light sensor is faulty. The automatic driving lights are malfunctioning. ▶ Switch the light functions on/off manually (⟶ page 251). ▶ Consult a qualified specialist workshop.
Indicator lamp in instrument cluster inoperative Consult workshop	* An indicator lamp on the instrument cluster is defective. ▶ Consult a qualified specialist workshop.
Right dipped beam	* The right low beam is malfunctioning. ▶ Consult a qualified specialist workshop.
Licence plate lamp	* The number plate lamp is malfunctioning. ▶ Consult a qualified specialist workshop.
Rear fog light	* The rear fog light is malfunctioning. ▶ Consult a qualified specialist workshop.
Reversing light	* The reversing light is malfunctioning. ▶ Consult a qualified specialist workshop.
Right daytime running light	* The right daytime running lights are malfunctioning. ▶ Consult a qualified specialist workshop.

Display messages	Possible causes/consequences and ▶ Solutions
Left daytime running light	* The left daytime running lights are malfunctioning. ▶ Consult a qualified specialist workshop.
Left tail light/ brake light	* The left brake light/tail light is malfunctioning. ▶ Consult a qualified specialist workshop.
Right tail light/ brake light	* The right brake light/tail light is malfunctioning. ▶ Consult a qualified specialist workshop.
Third brake light	* The third brake light is malfunctioning. ▶ Consult a qualified specialist workshop.
Right tail light	* The right tail light is malfunctioning. ▶ Consult a qualified specialist workshop.
Left tail light	* The left tail light is malfunctioning. ▶ Consult a qualified specialist workshop.
Front right parking light	* The front right parking light is malfunctioning. ▶ Consult a qualified specialist workshop.

Display messages	Possible causes/consequences and ▶ Solutions
Front left parking light	* The front left parking light is malfunctioning. ▶ Consult a qualified specialist workshop.
Right front fog lamp	* The right front fog lamp is malfunctioning. ▶ Consult a qualified specialist workshop.
Left front fog lamp	* The left front fog lamp is malfunctioning. ▶ Consult a qualified specialist workshop.
Right main beam	* The right high beam is malfunctioning. ▶ Consult a qualified specialist workshop.
Left main beam	* The left high beam is malfunctioning. ▶ Consult a qualified specialist workshop.
Right brake light	* The right brake light is malfunctioning. ▶ Consult a qualified specialist workshop.
Left brake light	* The left brake light is malfunctioning. ▶ Consult a qualified specialist workshop.

Display messages	Possible causes/consequences and ▶ Solutions
Front right indicator	* The front right turn signal lamp is malfunctioning. ▶ Consult a qualified specialist workshop.
Right mirror indicator	* The turn signal lamp on the right mirror is malfunctioning. ▶ Consult a qualified specialist workshop.
Left mirror indicator	* The turn signal lamp on the left mirror is malfunctioning. ▶ Consult a qualified specialist workshop.
Rear right indicator	* The rear right turn signal lamp is malfunctioning. ▶ Consult a qualified specialist workshop.
Rear left indicator	* The rear left turn signal lamp is malfunctioning. ▶ Consult a qualified specialist workshop.
Front left indicator	* The front left turn signal lamp is malfunctioning. ▶ Consult a qualified specialist workshop.
Adaptive Highbeam Assist currently unavailable See Owner's Manual	* Adaptive Highbeam Assist is deactivated and temporarily inoperative. **THIS MAY BE DUE TO THE FOLLOWING CAUSES:** • The windscreen is dirty in the camera's field of vision.

Display messages	Possible causes/consequences and ▶ Solutions
	• Visibility is impaired due to heavy rain, snow or fog. ▶ Clean the windscreen. When the system detects that the camera is fully operational, the display will show a message reading Adaptive Highbeam Assist available again Adaptive Highbeam Assist will then be operational again.
Adaptive Highbeam Assist inoperative	* Adaptive Highbeam Assist is malfunctioning. ▶ Switch high beam on/off manually. ▶ Consult a qualified specialist workshop.

Warning and indicator lamps

Overview of indicator and warning lamps

Some systems will perform a self-test when the vehicle is switched on. Some indicator and warning lamps may briefly light up or flash. This behaviour is non-critical. These indicator and warning lamps indicate a malfunction only if they light up or flash after the vehicle has been started or during a journey.

INDICATOR AND WARNING LAMPS:

Low beam (→ page 251)

Side lights (→ page 251)

High beam (→ page 254)

Turn signal lights (→ page 254)

Fog light (→ page 252)

Rear fog light (→ page 251)

Seat belt not fastened

Brakes (red) (→ page 813)

Brakes (yellow)

ABS malfunction (→ page 813)

Off-road gear

ESP® (→ page 813)

ESP® OFF (→ page 813)

Active Brake Assist switched off

Parking brake applied (red) (→ page 813)

Parking brake (yellow) (→ page 813)

Electric power steering malfunction

Electrical fault (→ page 819)

Restraint system

Engine diagnostics (→ page 819)

Fuel reserve with fuel filler cap location indicator (→ page 819)

Coolant too hot/cold (→ page 819)

Distance warning (→ page 817)

Preglow

Tyre pressure monitoring system (→ page 678)

Occupant safety

Warning/indicator lamp	Possible causes/consequences and ▶ Solutions
 Restraint system warning lamp	* The red restraint system warning lamp is on while the vehicle is on. The restraint system is malfunctioning (⟶ page 139). **WARNING** Risk of injury due to malfunctions in the restraint system Components in the restraint system may be activated unintentionally or not deploy as intended in an accident. ▶ Have the restraint system checked and repaired immediately at a qualified specialist workshop. ▶ Drive on carefully. ▶ Note the messages on the instrument cluster. ▶ Consult a qualified specialist workshop immediately.
 Seat belt warning lamp flashes	* The red seat belt warning lamp flashes, and an intermittent warning tone sounds. The driver or front passenger has not fastened their seat belt while the vehicle is in motion. ▶ Fasten your seat belt (⟶ page 138). The warning lamp and the intermittent warning tone will go out.
 Seat belt warning lamp lights up	* The red seat belt warning lamp lights up after the vehicle starts as soon as the driver's or front passenger door has been closed. An intermittent warning tone may also sound. For certain countries only: The red seat belt warning lamp lights up for a maximum of six seconds after the vehicle has been switched on. The driver's or front passenger's seat belt is not fastened. ▶ Fasten your seat belt (⟶ page 138). The warning lamp will go out.

Safety systems

Warning/indicator lamp	Possible causes/consequences and ▶ Solutions
 ESP® warning lamp flashes	* The yellow ESP® warning lamp flashes while the vehicle is in motion. ESP® or traction control intervenes because there is a risk of skidding or at least one wheel is spinning. Cruise control or Active Distance Assist DISTRONIC has been automatically switched off. ▶ When pulling away, accelerate only as much as is necessary. ▶ Depress the accelerator pedal less during your journey. ▶ Adapt your driving style to suit the weather and road conditions. ▶ Do not switch off ESP®. In exceptional cases, it may be better to switch off ESP®(⟶ page 375).
 ESP® warning lamp lights up	* The yellow ESP® warning lamp is on while the vehicle is on. ESP® is malfunctioning. Other driving systems and driving safety systems (e.g. BAS) may also be malfunctioning. ⚠ **WARNING** Risk of skidding if ESP® is malfunctioning If ESP® is malfunctioning, ESP® cannot carry out vehicle stabilisation. In addition, other driving safety systems are switched off. ▶ Drive on carefully. ▶ Have ESP® checked at a qualified specialist workshop. ▶ Pay attention to the display messages. ▶ Drive on carefully.

Warning/indicator lamp	Possible causes/consequences and ▶ Solutions
	▶ Consult a qualified specialist workshop immediately.
ESP® OFF warning lamp	* The yellow ESP® OFF warning lamp is on while the vehicle is on. ESP® has been deactivated. **WARNING** Risk of skidding when driving with ESP® deactivated ESP® does not act to stabilise the vehicle. The availability of further driving safety systems is also limited. ▶ Drive on carefully. ▶ Deactivate ESP® only for as long as the situation requires. If ESP® cannot be activated, ESP® is malfunctioning. ▶ Have ESP® checked immediately at a qualified specialist workshop. ▶ Switch ESP® on again. In exceptional cases, it may be better to switch off ESP®(⟶ page 375). ▶ Adapt your driving style to suit the road and weather conditions. If ESP® cannot be switched on: ▶ Drive on carefully. ▶ Have ESP® checked at a qualified specialist workshop.

Warning/indicator lamp	Possible causes/consequences and ▶ Solutions
Parking brake indicator lamp (yellow)	* The yellow parking brake indicator lamp is flashing or lit up. The parking brake is malfunctioning. ▶ Note the messages on the instrument cluster.
Parking brake indicator lamp (red)	* The red parking brake indicator lamp is flashing or lit up. ▶ Observe the notes on the manual parking brake (⟶ page 363) or the electric parking brake (⟶ page 365). If the yellow indicator lamp (P) is simultaneously lit or flashing, the parking brake is malfunctioning. ▶ Note the messages on the instrument cluster.
Brakes warning lamp (red)	* The red brake system warning lamp is on while the vehicle is on. **POSSIBLE CAUSES:** • The brake force boosting is malfunctioning and the braking characteristics may be affected. • There is insufficient brake fluid in the brake fluid reservoir.

WARNING
Risk of accident and injury if brake force boosting is malfunctioning

If brake force boosting is malfunctioning, increased brake pedal force may be necessary for braking. The braking characteristics may be impaired. The braking distance can increase in emergency braking situations.

▶ Stop in a safe location immediately. Do not continue driving!

▶ Consult a qualified specialist workshop.

Warning/indicator lamp	Possible causes/consequences and ▶ Solutions
	WARNING Risk of an accident due to low brake fluid level If the brake fluid level is too low, the braking effect and the braking characteristics may be impaired. ▶ Stop the vehicle as soon as possible, paying attention to road and traffic conditions. Do not continue driving. ▶ Consult a qualified specialist workshop. ▶ Do not top up the brake fluid. ▶ Stop the vehicle immediately in accordance with the traffic conditions. Do not continue driving! ▶ Secure the vehicle against rolling away. ▶ Contact a qualified specialist workshop. ▶ Do not top up the brake fluid.
ABS ABS warning lamp	* The yellow ABS warning lamp is on while the vehicle is on. ABS is malfunctioning. If an additional warning tone sounds, this means the EBD is malfunctioning. Other driving systems and driving safety systems may also be malfunctioning. ▶ Note the messages on the instrument cluster.

Warning/indicator lamp	Possible causes/consequences and ▶ Solutions
	WARNING There is a risk of skidding if EBD or ABS is malfunctioning The wheels may lock during braking. The steerability and braking characteristics are heavily impaired and the braking distance may increase. In addition, other driving safety systems are switched off. ▶ Drive on carefully. ▶ Have the brake system checked immediately at a qualified specialist workshop. ▶ Drive on carefully. ▶ Consult a qualified specialist workshop.

Driving and driving safety systems

Warning/indicator lamp	Possible causes/consequences and ▶ Solutions
 Warning lamp for distance warning	* The red distance warning lamp lights up while the vehicle is in motion. The distance to the vehicle in front is too small for the selected speed. If an additional warning tone sounds, this means you are approaching an obstacle at too high a speed. ▶ Be ready to apply the brakes immediately. ▶ Increase the distance. Function of Active Brake Assist (⟶ page 378).

Warning/indicator lamp	Possible causes/consequences and ▶ Solutions
Active Brake Assist warning lamp	* The Active Brake Assist warning lamp is on. Due to dirty sensors or a malfunction, the system is not available or the range of functions is restricted. ▶ Note the messages on the instrument cluster.

Vehicle

Warning/indicator lamp	Possible causes/consequences and ▶ Solutions
TCO Tachograph warning lamp	* The yellow tachograph indicator lamp is lit. The tachograph (TCO) has malfunctioned, e.g. due to invalid data or a missing driver card. Possible causes of malfunctions can be found in the manufacturer's Owner's Manual.
Power steering warning lamp (red)	* The red power steering warning lamp is on while the vehicle is on. The power assistance or the steering itself is malfunctioning. **WARNING** Risk of accident if steering capability is impaired If the steering does not function as intended, the vehicle's operating safety is jeopardised. ▶ Pull over and stop the vehicle safely as soon as possible, paying attention to road and traffic conditions. Do not continue driving under any circumstances. ▶ Consult a qualified specialist workshop. ▶ Stop the vehicle immediately in accordance with the traffic conditions. Do not continue driving! ▶ Contact a qualified specialist workshop. ▶ Note the messages on the instrument cluster.

Warning/indicator lamp	Possible causes/consequences and ▶ Solutions
Door indicator lamp	* The yellow "door open" indicator lamp is lit. A door is not fully closed ▶ Close all the doors.

Engine

Warning/indicator lamp	Possible causes/consequences and ▶ Solutions
Electrical fault warning lamp	* The red electrical fault warning lamp is lit. A malfunction has occurred in the electrics. ▶ Note the messages on the instrument cluster.
Fuel reserve warning lamp	* The yellow fuel reserve warning lamp is on while the vehicle is on. The fuel supply has dropped into the reserve range. Operation of the auxiliary heating (stationary heater) is deactivated in the reserve range. ▶ Refuel the vehicle.
Engine diagnostics warning lamp	* The yellow engine diagnostics warning lamp is on while the vehicle is on. **THERE MAY BE A MALFUNCTION IN THE FOLLOWING VEHICLE SYSTEMS:** • Engine management • Injection • Exhaust system • Fuel system This may cause the emissions limit values to be exceeded and the engine to run in emergency mode. ▶ Have the vehicle checked immediately at a qualified specialist workshop.

Warning/indicator lamp	Possible causes/consequences and ▶ Solutions
Coolant warning lamp	* The red coolant warning lamp is on while the vehicle is on. The coolant level is too low. If the coolant level is correct, the air supply to the radiator may be impaired or the radiator's electric fan may be faulty. The coolant is too hot and the engine is not being adequately cooled.

WARNING
Risk of burns when opening the bonnet

IF YOU OPEN THE BONNET IN THE EVENT OF AN OVERHEATED ENGINE OR FIRE IN THE ENGINE COMPARTMENT, THE FOLLOWING SITUATIONS MAY OCCUR:

- You may come into contact with hot gases.
- You may come into contact with other escaping hot operating fluids.

▶ Before opening the bonnet, allow the engine to cool down.

▶ In the event of a fire in the engine compartment, keep the bonnet closed and call the fire service.

▶ Pay attention to the display messages.

▶ Stop the vehicle immediately in accordance with the traffic conditions and switch it off.

▶ Secure the vehicle against rolling away.

▶ Exit the vehicle and keep a safe distance from it until the engine has cooled down.

▶ Check the coolant level and top up with coolant, complying with the instructions (⟶ page 613).

▶ If the coolant has to be topped up frequently, have the engine cooling system checked at a qualified specialist workshop.

▶ Ensure that the air supply to the radiator is not impaired, e.g. by a plastic bag that has been blown onto the grille.

▶ Monitor the coolant temperature display on the instrument cluster.

Warning/indicator lamp	Possible causes/consequences and ▶ Solutions
	▶ Do not restart the engine until the coolant temperature is below 120°C. If you do, the engine may be damaged. ▶ Drive on to the nearest qualified specialist workshop. Avoid high engine loads, e.g. driving in mountainous terrain or stop-and-go driving.
 Coolant warning lamp	* The red coolant warning lamp is on while the vehicle is on. A warning tone also sounds. The coolant has exceeded the temperature of 120°C. The air supply to the radiator may be impaired or the coolant level may be too low. The engine has not been sufficiently cooled and may be damaged. ⚠ **WARNING** Risk of burns when opening the bonnet **IF YOU OPEN THE BONNET IN THE EVENT OF AN OVERHEATED ENGINE OR FIRE IN THE ENGINE COMPARTMENT, THE FOLLOWING SITUATIONS MAY OCCUR:** • You may come into contact with hot gases. • You may come into contact with other escaping hot operating fluids. ▶ Before opening the bonnet, allow the engine to cool down. ▶ In the event of a fire in the engine compartment, keep the bonnet closed and call the fire service. ▶ Pay attention to the display messages. ▶ Stop the vehicle immediately in accordance with the traffic conditions and switch it off. ▶ Secure the vehicle against rolling away. ▶ Exit the vehicle and keep a safe distance from it until the engine has cooled down. ▶ Check the coolant level and top up with coolant, complying with the instructions (⟶ page 613). ▶ If the coolant has to be topped up frequently, have the engine cooling system checked at a qualified specialist workshop. ▶ Ensure that the air supply to the radiator is not impaired, e.g. by a plastic bag that has been blown onto the grille.

Warning/indicator lamp	Possible causes/consequences and ▶ Solutions
	▶ Monitor the coolant temperature display on the instrument cluster. ▶ If the coolant temperature is below 120°C, you can continue driving to the nearest qualified specialist workshop. ▶ Avoid high engine loads, e.g. driving in mountainous terrain or stop-and-go driving.
Coolant warning lamp	*The red coolant warning lamp is lit while the vehicle is being started, and the coolant temperature display is positioned at the beginning of the scale. The temperature sensor for the coolant temperature display is defective. The coolant temperature is no longer being monitored. If the coolant is too hot, the engine may be damaged. ▶ Stop the vehicle immediately in accordance with the traffic conditions and switch it off. Do not continue driving! ▶ Secure the vehicle against rolling backwards or forwards. ▶ Notify a qualified specialist workshop.

Tyres

Warning/indicator lamp	Possible causes/consequences and ▶ Solutions
Tyre pressure monitoring system warning lamp flashes	*The yellow tyre pressure monitoring system warning lamp (pressure loss/malfunction) flashes for approximately one minute and then remains lit. The tyre pressure monitoring system is malfunctioning. **WARNING** There is a risk of an accident if the tyre pressure monitoring system is malfunctioning The tyre pressure monitoring system cannot issue a warning if there is pressure loss in one or more of the tyres. Tyres with insufficient tyre pressure may impair the driving characteristics as well as steering and braking. ▶ Have the tyre pressure monitoring system checked at a qualified specialist workshop.

Warning/indicator lamp	Possible causes/consequences and ▶ Solutions
	▶ Pay attention to the display messages. ▶ Consult a qualified specialist workshop.
 Tyre pressure monitoring system warning lamp lights up	* The yellow tyre pressure monitoring system warning lamp (pressure loss/malfunction) is on. The tyre pressure monitoring system has detected a loss of pressure in at least one tyre. ⚠ **WARNING** Risk of an accident due to insufficient tyre pressure • The tyres can burst. • The tyres can wear excessively and/or unevenly. • The driving characteristics as well as the steering and braking may be greatly impaired. You could then lose control of the vehicle. ▶ Observe the recommended tyre pressures. ▶ Adjust the tyre pressure if necessary. ▶ Stop the vehicle without steering or braking suddenly. Pay attention to the traffic conditions. ▶ Secure the vehicle against rolling away. ▶ Pay attention to the display messages. ▶ Check the tyres and, if necessary, replace the wheel (⟶ page 688). ▶ Check the tyre pressure. You can check the tyre pressure electronically (⟶ page 36). ▶ Correct the tyre pressure as necessary.

Back to Contents

Index

Searching for something specific? Click on the relevant initial letter here and look it up.
Incidentally, you can also use your PDF reader's search function at any time.

0-9
A
B
C
D
E
F
G
H
I
J
K
L
M
N
O
P
Q
R
S
T
U
V
W

0-9

360° Camera

Button
Care
Function

A

A/C function

ABS

Access data

Setting (Bluetooth®)

Accident and Breakdown Management

Mercedes-Benz Support calls

Accident, emergency call

Activating/deactivating power take-off

Activating/deactivating the acoustic locking verification signal

Active Brake Assist

Function

Setting

Active Distance Assist DISTRONIC

activating/deactivating

activating/deactivating the variable limiter

Active Speed Limit Assist

calling up a speed

Function

increasing/decreasing the speed

Route-based speed adaptation

storing a speed

Active Emergency Stop Assist, Emergency Stop Assist

Function

Active Lane Keeping Assist
- Activating/deactivating
- Function
- Setting the sensitivity
- Trailer operation

Active Speed Limit Assist

Active Steering Assist
- Activating/deactivating
- Function

Adaptive brake lights

Adaptive cruise control

Adaptive Highbeam Assist
- Function
- Switching on/off

AdBlue®, Reducing agent
- Additives
- Displaying the fill level
- Filling quantity
- Notes
- Purity
- Topping up

Add-on equipment (body/equipment mounting directives)

Additional door lock

Additional turn signal light
- Replacing an illuminant (all-wheel drive vehicles)

Additives
- AdBlue®

Additives (engine oil)
Engine oil
Adjusting the lights (driving abroad)
ADR (working speed control)
Adjusting
Function
Switching on/off
Air intake box
Cleaning the water drain valve
Air recirculation button
Convenience opening/closing
Air vents
Adjusting (front)
Adjusting (rear)
Adjusting (roof)
Air-recirculation mode
Airbag
Inflating
Overview
Warning lamp
Alarm system
All-wheel drive
Notes
Alternative route
Android Auto
Connecting a mobile phone (wired)
Connecting a mobile phone (wireless)

Ending
Information
Sound settings
Transferred vehicle data

Android smartphone

Animals

Anti-lock braking system

Anti-theft alarm system

Activating/deactivating
Activating/deactivating interior protection
Function
Interior motion sensor
Stopping the alarm
Switching tow-away protection on/off
Tow-away protection

Anti-theft protection

Additional door lock
Anti-theft alarm system
Immobiliser

Apple CarPlay®, Smartphone

Connecting an iPhone® (cable)
Connecting an iPhone® (wireless)
Ending
Notes
Overview
Sound settings
Transferred vehicle data

Apps, Digital Extras
Mercedes-Benz
Aquaplaning
Ashtray
ASR (acceleration skid control)
Assembly licence plate, front
Assistance system
Assistant display (on-board computer)
ASSYST PLUS, Service interval display
Battery disconnection periods
Displaying the service due date
Function/notes
Regular maintenance work
Special service requirements
Attachments
ATTENTION ASSIST
Function
Setting
Attention assistant
Authorised workshop
Automatic climate control
Automatic distance control
Automatic driving lights
Automatic emergency call
Automatic engine start/stop

Automatic locking
after closing the last door
Automatic measures after an accident
Automatic transmission
DIRECT SELECT lever
Engage park position
Engaging drive position
Engaging neutral
Engaging reverse gear
Kickdown
Restricting the shift range
Transmission position display
Transmission positions
Auxiliary heating
Function
Hot-water auxiliary heater
Auxiliary warm-air heater, Stationary heating
activating
Immediate heating mode
Overview, timer
Problems
Setting the departure time
Setting the temperature/operating duration
Setting the timer
Axle load

B

Baby
- Pregnancy (seat belt)

Back support, Lumbar support

Ball coupling
- Attaching

Ball neck
- Removing

BAS

Basic information

Battery
- Charging
- Charging the starter battery
- Declaration of conformity
- Disconnecting the auxiliary battery (co-driver seat)
- Disconnecting the auxiliary battery (engine compartment)
- Disconnecting the starter battery
- Fitting/removing the starter battery
- Key
- Notes (vehicle battery)
- Remote control (stationary heating/ventilation)
- Removing/fitting the floor covering
- Starting assistance

Battery main switch
- Notes

Switching the power supply on/off

Beacon

Activating/deactivating

Securing

Belt

Adjusting the height

Fastening

Notes on wearing correctly

Releasing

Blind Spot Assist

Activating/deactivating

Exit warning

Function

Function of Rear Cross Traffic Alert

Bluetooth®

Connecting a mobile phone

Information

Setting up an Internet connection

Switching on/off

Bottle holder

Brake

ABS (anti-lock braking system)

Activating/deactivating the HOLD function

Active Brake Assist

Adaptive brake lights

BAS (Brake Assist System)

Braking with parking brake

Downhill gradient
Driving instructions
EBD (Electronic Brakeforce Distribution)
Heavy/light loads
HOLD function
Limited braking effect (salt-treated roads)
New brake disks/brake linings
new brake linings/brake disks
Post-collision brake
Running-in notes
Wet road surfaces
Brake Assist System
Brake fluid
Brakeforce Distribution
Braking assistance
Breakdown
Changing a wheel
Overview of assistance measures
Tow-starting
Towing (both axles on the ground)
Towing (raised front/rear axle)
Transporting the vehicle
Bulbs

C

Call list

Deleting

Making a call

Overview

Selecting options

Calling Support at Mercedes-Benz

Calling up a web page

Calls, Telephone operation

Accepting

Activating functions during a call

Calls with several participants

Declining

Ending a call

Incoming call during an existing call

Making

Telephone

Using the international dialling code

Via the overhead control panel

Camera

360° camera function

Activating using GPS (reversing camera)

Driver camera

Information

Manage activation points
Off-road function
Reversing camera
Transparent bonnet
Car key
Car wash (care)
Car-to-X-Communication
Display on map
Overview
Sending hazard warnings
Care
Automatic car wash
Carpet
Display
Exterior lighting
Genuine wood/trim elements
Headliner
High-pressure cleaner
Plastic trim
Reversing camera/360° Camera
Seat belt
Seat cover
Sensors
Tailpipes
Trailer hitch
Washing by hand
Wheels/rims

Windows
Wiper blades

Carpet

Cleaning

Central locking system

Button

Changing a wheel

Fitting a new wheel
Lowering the vehicle
Preparing
Raising the vehicle
Removing a wheel

Changing bulbs

Dipped beam
High beam
Indicator (front)
Tail lamp bulb types (chassis)

Charging

Battery
Charging wirelessly (mobile phone in the front)
Charging wirelessly (mobile phone)
Mobile phone (USB port)

Child safety lock

Sliding door

Child seat

Adjusting the vehicle seat

Approval categories
Basic instructions
Brief overview of most important points
Fitting ISOFIX
Front passenger seat
Recommendations for child restraint systems
Risks/dangers
Seats suitable for belt-secured child restraint systems
Seats suitable for ISOFIX child restraint systems
Securing to the front passenger seat with the seat belt
Top Tether

Children

Avoiding dangers in the vehicle
Basic instructions

Chock

Rear-wheel drive

Cigarette lighter

Clean varnish

Cleaning

Paint
Vehicle interior
Washing by hand

Cleaning the water drain valve (air intake box)

Climate control

A/C function
Activating/deactivating
Adjusting the air vents (roof)

Air distribution settings
Air vents (front)
Air vents (rear)
Air-recirculation mode
Automatic control
Automatic control (rear compartment)
Auxiliary heating
Demisting the windows
Hot-water auxiliary heater
Load compartment ventilation (roof ventilator)
Refrigerant
Setting the air distribution
Setting the rear-compartment climate control
Switching the rear window heater on/off
Switching the windscreen heater on/off
Synchronisation function
TEMPMATIC control panel
THERMOTRONIC control panel
Ventilating the vehicle (convenience opening)
Close-range braking
Co-driver bench seat
Folding the seat cushion forwards/backwards
COC papers, Certificate of conformity
Cockpit
Dashboard
Combination switch
Lights

Rear window wiper
Windscreen wipers
Comfort open/close (recirculation button)
Communication module
Setting up an Internet connection
Commuter route
Compass
Components subject to radio regulations
Declaration of conformity
Connection status
Displaying
Overview
Contacts, Address book, Phone book
Calling up
Deleting
Importing
Importing (overview)
Information
Making a call
Name format
Note about suggestions
Options
Selecting options for suggestions
Storing
Convenience closing
with key

Convenience opening
- with key

Coolant
- Checking the level
- Notes

Copyright

Cornering light

Correct use

Crewcab bench seat
- Folding the seat cushion forwards/backwards

Cross traffic (warning)

Crosswind Assist

Cruise control
- activating/deactivating
- Calling up a speed
- Function
- Requirements:
- Setting a speed
- Storing a speed

Cup holders
- Centre console
- Rear

D

Damage
- Limited protection

Dashboard
- Cockpit

Data processing in the vehicle

Data protection rights

Data storage
- Data protection rights
- electronic control units
- Onboard Logic Unit
- Online services

Dealership

Declaration of conformity
- Battery
- Components subject to radio regulations
- Electromagnetic compatibility
- Jack

Deployed components
- Limited protection

Deployment situations

Destination
- Editing a suggestion
- Editing intermediate destinations
- Editing the previous destinations

Saving as a favourite

Destination entry

Accepting a destination suggestion

Entering an intermediate destination

Entering geo-coordinates

Selecting a contact

Selecting a received destination

Selecting from favourites

Selecting from the map

Selecting previous destinations

Destination entry (multimedia system)

Notes

Selecting a POI

Diagnostics connection

Dialling a phone number (on-board computer)

Diesel

Low outside temperatures

Notes

Diesel particulate filter

Automatic regeneration

Display load

Starting/cancelling regeneration

Digital inside rear-view mirror

Digital Owner's Manual

Digital speedometer

Dipped beam

Changing bulbs

DIRECT SELECT lever

Engaging drive position
Engaging neutral
Engaging park position automatically
Engaging reverse gear
Function
Selecting park position
Transmission position display
Transmission positions

Display

Cleaning

Display (instrument cluster)

Display (MBUX multimedia system)

Settings

Display message, Message (instrument cluster)

Calling up on the on-board computer
Notes

Display messages

LIM - - - km/h
- - - km/h
--- km/h
12 V battery See Owner's Manual
AdBlue system fault Engine start not possible See Owner's Manual
AdBlue system fault Limp mode in XXX km See Owner's Manual
AdBlue system fault Limp mode: max. XXX km/h Start not poss. in XXX km

AdBlue system fault Limp mode: max. XXX km/h
AdBlue system fault Reduced power
AdBlue system fault See Owner's Manual
Add 1 litre engine oil when next refuelling
ATTENTION ASSIST inoperative
ATTENTION ASSIST: Take a break!
Automatic driving lights inoperative
Before starting the vehicle, turn the steering wheel
Camera view restricted See Owner's Manual
Change key battery
Check brake fluid level
Check engine oil level when next refuelling
Currently unavailable Low battery
Currently unavailable Refuel
Currently unavailable See Owner's Manual
Currently unavailable See Owner's Manual
Diesel particulate filter Drive at high engine speeds See Owner's Manual
Emergency stop initiated
Engine oil level cannot be measured
Engine oil level Reduce oil level
Engine oil level Stop Switch off the vehicle
Engine oil pressure Stop Switch off the vehicle
Fault See Owner's Manual
Front left fault Consult workshop
Front left indicator
Front left parking light
Front right indicator

Front right parking light
Fuel filter Fault Consult workshop
Incline too steep See Owner's Manual
Inoperative See Owner's Manual
Inoperative See Owner's Manual
inoperative See Owner's Manual
EBD Inoperative See Owner's Manual
inoperative
Key not detected (red display message)
Key not detected (white display message)
Key not detected Place key back in driver's area (white display message)
Key not detected Place key back in driver's area (red display message)
Left brake light
Left daytime running light
Left front fog lamp
Left main beam
Left mirror indicator
Left tail light
Left tail light/ brake light
Left window airbag Fault Consult workshop
Licence plate lamp
LIM Limiter Set speed exceeded
Off
HOLD Off
Parking brake See Owner's Manual (electric parking brake)
Parking brake See Owner's Manual (manual parking brake)
LIM Passive

Rear fog light
Rear left indicator
Rear right indicator
Release parking brake
Remain alert! (white display message)
Replace air filter
Replace key
Restraint system fault Consult workshop
Restricted during trailer operation
Reversing light
Right brake light
Right daytime running light
Right dipped beam
Right front fog lamp
Right main beam
Right mirror indicator
Right tail light
Right tail light/ brake light
Right window airbag Fault Consult workshop
See Owner's Manual
Steering fault Drive carefully Consult workshop
Steering fault Increased physical effort See Owner's Manual
Steering fault See Owner's Manual
Steering fault Stop immediately See Owner's Manual
Step not extended See Owner's Manual
Stop vehicle but do not switch off
Stop vehicle Leave vehicle on to charge the 12 V battery

Stop vehicle See Owner's Manual
Temporarily unavailable Sensors dirty
Third brake light
To release the parking brake: switch on the vehicle
Top up AdBlue Limp mode in XXX km See Owner's Manual
Top up AdBlue Performance reduced
Top up AdBlue See Owner's Manual
Top up coolant See Owner's Manual
Top up coolant urgently See Owner's Manual
Top up washer fluid
Top up XX,X l AdBlue Limp mode: max. XXX km/h No start in XXX km
Vehicle is operational Switch off vehicle before exiting
4MATIC currently unavailable
4MATIC inoperative
120 km/h Maximum speed exceeded
Active Brake Assist Range of functions currently reduced See Owner's Manual
Active Brake Assist Reduced range of functions See Owner's Manual
Active Distance Assist available again
Active Distance Assist currently unavailable See Owner's Manual
Active Distance Assist inoperative
Active Lane Keeping Assist currently unavailable See Owner's Manual
Active Lane Keeping Assist inoperative
Active Lane Keeping Assist Reduced range of functions See Owner's Manual
Active Steering Assist currently unavailable due to multiple emergency stops
Active Steering Assist currently unavailable See Owner's Manual
Active Steering Assist inoperative
Adaptive Highbeam Assist currently unavailable See Owner's Manual

Adaptive Highbeam Assist inoperative
Air conditioning system fault See Owner's Manual
Apply brake to deselect drive range P
Apply brakes and start vehicle to shift out of drive range P or N
Blind Spot Assist and exit warning currently unavailable See Owner's Manual
Blind Spot Assist and exit warning inoperative
Check brake pads See Owner's Manual
Check tyre(s)
Consult workshop without changing the drive range
Correct the tyre pressure
Cruise control and limiter inoperative
Cruise control inoperative
Indicator lamp in instrument cluster inoperative Consult workshop
Limit speed (winter tyres) XXX km/h
Limiter inoperative
Moving-off information Assist inoperative
N permanently active Risk of rolling
Only select drive range P when vehicle is stationary
PARKTRONIC inoperative See Owner's Manual
Place the key in the marked space See Owner's Manual
Reversing not possible Consult workshop
Risk of rolling Driver's door open Transmission not in P
Risk of rolling Driver's seat not occupied Transmission not in P
Sideguard Assist currently unavailable
Sideguard Assist inoperative
SOS NOT READY
Speed Limit Assist currently unavailable See Owner's Manual

Speed Limit Assist inoperative
The camera's view of the driver is currently impeded Affected functions: see Owner's Manual
To select drive range R, depress brake
To start engine, shift to drive range P or N
Traffic Sign Assist currently unavailable See Owner's Manual
Traffic Sign Assist inoperative
Transmission fault Stop
Tyre pressure monitoring system currently unavailable
Tyre pressure monitoring system inoperative
Tyre pressure monitoring system inoperative No tyre pressure sensors
Tyre pressure sensor system missing
Warning Tyre malfunction
Wiper fault

Displaying range (trip menu)
Displaying total distance (trip menu), Total distance recorder
Displays (on-board computer)
Distance control
Distance warning
Distraction detection
DISTRONIC
Door
Activating/deactivating the automatic locking mechanism
Additional door lock
Locking/unlocking emergency key
Opening (from the inside)
Unlocking (from the inside)
Door control panel

Double co-driver's seat

Downhill driving assist

- Activates/deactivates DSR
- Notes

Drive Away Assist

Driver camera

- activating/deactivating
- Function

Driving in winter

Driving instructions

- Brakes
- Downhill gradient
- Driving abroad (information)
- Driving in winter
- Light adjustment when driving abroad
- Limit speed
- Limited braking effect (salt-treated roads)
- New brake disks/brake linings
- Parking brake
- Running-in notes
- Short-distance trips
- slippery road surfaces
- Subjecting brakes to a load
- Wet road surfaces (brake)

Driving notes

- General driving tips
- Transport by rail

Driving safety system

- ABS (anti-lock braking system)
- Active Brake Assist
- Active Emergency Stop Assist
- Active Steering Assist
- Adaptive brake lights
- ASR (acceleration skid control)
- ATTENTION ASSIST
- BAS (Brake Assist System)
- Blind Spot Assist
- Cameras
- Cruise control
- EBD (Electronic Brakeforce Distribution)
- ESP® (Electronic Stability Program)
- ESP® Crosswind Assist
- ESP® trailer stabilisation
- Hill Start Assist
- HOLD function
- Overview
- Radar and ultrasonic sensors
- Speed Limit Assist
- Traffic Sign Assist
- Your responsibility

Driving system

Driving tips

- Aquaplaning
- Driving off-road

Driving on flooded roads
Driving on wet roads
Mountainous terrain

Drowsiness detection

DSR

Changing the target speed

DSR (Downhill Speed Regulation)

Activating/deactivating
Notes

Dynamic handling control system

DYNAMIC SELECT

Calling up the fuel consumption indicator
Displaying engine data
Displaying vehicle data

E

E-mails

EBD, Electronic Brakeforce Distribution

EC operating permit number

ECO display

- Function
- Resetting

ECO start/stop function

- Activating/deactivating
- Automatic engine start/stop
- Operation

Electric parking brake

- Automatically applying
- Emergency braking
- Manually applying/releasing
- Notes
- Releasing automatically

Electric sliding door

- Function
- open with door handle
- Open/close with button
- open/close with key button
- Opening/closing (from the inside)
- Resetting
- Unlocking manually

Electrical closing assist (sliding door)

Electrical fuses

Notes

Electrical step

Emergency release

Obstruction

Preventing extension

Retracting/extending

Electromagnetic compatibility

Declaration of conformity

Electronic Stability Program

Activating/deactivating

Electronics

Engine electronics

Fitting two-way radios

Emergency

Fire extinguisher

First-aid kit (soft-sided)

Overview of assistance measures

Removing the warning triangle

Safety vest

Setting up the warning triangle

Warning lamp

Emergency braking

Electric parking brake

Manual parking brake

Emergency exit
- Emergency hammer

Emergency hammer

Emergency key
- Locking/unlocking the door
- Removing/inserting

Emergency operation mode
- Starting the vehicle

Energy consumption
- Key

Energy consumption (on-board computer)

Engaging drive position (automatic transmission)

Engaging neutral (automatic transmission)

Engaging reverse gear (automatic transmission)

Engine
- ECO start/stop function
- Problems (fuel/fuel tank)
- Starting assistance
- Switching off (start/stop button)

Engine data
- Displaying
- DYNAMIC SELECT

Engine electronics

Engine number

Engine oil, Oil
- Additives

Capacity
Checking the oil level (on-board computer)
Topping up

Engine output

Notes on changes

ENR (electronic level control)

Function
Manually pumping up the air bellows
Problems
Raising/lowering

Entering characters

Deleting the user dictionary
Function/notes
Setting the keyboard language
using the touchscreen

Environmental protection

Driving style
Take-back of end-of-life vehicles

Environmentally-responsible driving style

ESC, Electronic Stability Control

ESP®

Activating/deactivating
Crosswind Assist
Function
Trailer stabilisation

Exhaust gas aftertreatment

Exit warning

Blind Spot Assist

Exiting a parking space

Drive Away Assist

PARKTRONIC

Exterior lighting

Activates/deactivates the beacon

Attaching a beacon

Care

Light switch

Replacing illuminants (front)

F

Factory settings
- MBUX reset function

Fastening

Fatigue detection

Fault message
- Notes on display messages

Favourites
- Adding a destination
- Calling up
- Deleting
- Home address
- Moving
- Overview
- Renaming
- Work address

Filling station search
- Starting automatic search
- Switching the automatic search on/off

Fire extinguisher

First aid
- First-aid kit (soft-sided)

First-aid kit (soft-sided)

Fitting accessories
- Limited protection

Fitting the licence plate (front)

Flat tyre
- Changing a wheel
- Notes
- Tyre-change tool kit

Floor covering
- Removing/fitting (starter battery)

Floor mats

Foil covering
- Radar and ultrasonic sensors

Free Software

Frequencies
- Mobile phone
- Two-way radios

Front airbag
- Inflating

Front seat
- 8-way adjustment options
- Adjustment (electric)
- Manual adjustment with Comfort Package
- Manual adjustment without Comfort Package
- Manually adjusting
- rotating

Fuel
- Diesel

Draining the filter
Low outside temperatures
Problems
Quality (diesel)
Refuelling
Tank content (information)

Fuel consumption indicator

Fuel tank

Problems

Function the event of an accident

Information (how the restraint system works)

Fuses

Fuse box (co-driver footwell)
Fuse box (seat base of driver's seat)
Notes

G

Gearshift lever
- Overview

Gearshift recommendation
- Manual transmission

Genuine parts

Genuine wood (care)

Getting in/getting out

Global search
- Function

Grab handles
- Notes
- use

Gross mass

H

Handbrake (manual)

Handling characteristics

Unusual

Hands-free system

Hazard warning light system

Hazard warnings

Car-to-X-Communication

Head restraint

Adjusting manually

Headlamp flasher

Headliner (care)

Heating system

Help call

Mercedes-Benz emergency call system

High beam

Activating/deactivating

Changing bulbs

High-pressure cleaner (care)

Highbeam

Adaptive Highbeam Assist

Hill Start Assist

HOLD function

- Notes
- Switching on/off

Home screen

- Media display

Hot-water auxiliary heater

- Displays (remote control)
- Function
- Problems
- Switching on/off (button)
- Switching on/off (on-board computer)
- switching on/off (remote control)
- Switching on/off by remote control

I

Identification plate
Refrigerant
Immobiliser
Impact protection
Close-range braking
Implied warranty
Importer information
Regulatory radio information
Inattention detection
Incorrect behaviour by vehicle occupants
Limited protection
Indicator
Changing bulbs (front)
Indicator lamps
Overview
Inside rear-view mirror
digital inside rear-view mirror
Inside rearview mirror
Adjusting/setting anti-dazzle mode
Installations
Instrument cluster, Instrument display
Adjusting the lighting
Function/notes

Information on the display
Menu overview
Notes
Overview
Instrument lighting, Dashboard lighting
Intelligent light system
Adaptive Highbeam Assist
Cornering light
Interior lamp
Replacing light bulbs (rear)
Interior lighting
Box bodies
Equipment (bus)
Load compartment
Motion detector (rear)
Rear
Setting
Switch-off delay time
Interior motion sensor
Activating/deactivating
Function
Intermediate destination
Editing
Starting an automatic filling station search
Starting the automatic service station search

Internet

Calling up a web page

Calling up the web browser settings

Calling up web browser options

Deleting a bookmark

Deleting browser data

Managing bookmarks

Smartphone integration

Web browser in the background

Web browsers

Internet connection

Cancelling permission (mobile phone)

Displaying the connection status

Establishing

Information

Overview of connection status

Restrictions

Setting access data (Bluetooth®)

Setting up (communication module)

Setting up (Wi-Fi)

Setup (Bluetooth®)

iPhone®

Smartphone integration

ISOFIX child restraint system

Seats suitable for attaching

ISOFIX child seat anchor

Fitting

J

Jack

Declaration of conformity

Hydraulic

Removing from stowage compartment (hydraulic jack)

Storage location

Storage location (hydraulic jack)

Journeys abroad

Light adjustment low beam

Notes

Jump-start connection, Starting assistance

K

Key

- acoustic locking verification signal
- Battery
- Central locking system
- Deactivating a function
- electric sliding door open/close
- Emergency key
- Energy consumption
- Fastening to keyring
- Functions
- Problem
- Radio connection
- Unlocking setting

L

Ladder rack
- Maximum load
- Overview
- Platform truck

Lamp

Lane detection

Language
- Notes
- Setting

Lashing points
- Loading capacity
- Overview

Last destinations
- Selecting

Level regulation

Licence plate lighting
- Replacing light bulbs

Light switch (overview)

Lights
- Activating/deactivating the surround lighting
- Adaptive Highbeam Assist
- Adjusting the instrument lighting
- Automatic driving lights

Combination switch
Cornering light
Hazard warning lights
Headlamp flasher
High beam
Light adjustment when driving abroad
Light switch
Low beam
Parking lights
Range
Rear fog light
Responsibility with lighting systems
Standing lights
Switch-off delay time
Turn signal lights

Limit speed

Notes

Limiter

Activating/deactivating
Buttons
Calling up a speed
Function
Passive mode
Permanent setting
Requirements:
Selecting

Setting a speed
Storing a speed

Live Traffic Information

Displaying the traffic map
Displaying traffic incidents
Extending a subscription
Information from the service provider
Registering

Load compartment lighting (motion detector)

Load compartment ventilation

Load distribution

Load securing

Lashing points
Notes

Loading guidelines

Locking/unlocking

Activating/deactivating the automatic locking mechanism
Automatic locking (MMS)

Doors (interior)
Emergency key

Low beam

Activating/deactivating
Light adjustment when driving abroad

Lubricants

Additives (engine oil)
Operating fluids Notes

Lumbar support (4-way)

M

M+S tyres

Maintaining a safe distance
- Active Distance Assist DISTRONIC

Maintenance
- Paint

Malfunction
- Restraint system

Manoeuvring
- Close-range braking

Manoeuvring assistant
- Close-range braking
- Drive Away Assist

Manual parking brake
- Applying/releasing
- Emergency braking
- Folding up/down

Manual transmission
- Engage reverse gear
- Using the gearshift lever

Manually pumping up the air bellows (electronic level control)

Map, Traffic map
- Avoiding an area
- Avoiding an area (overview)

Changing an area
Deleting an area
Displaying online map contents
Displaying the compass
Displaying the map version
Displaying the range
Displaying the satellite map
Displaying the traffic map
Displaying weather information
Map data
Moving
Route overview after start
Selecting additional information
Selecting POI symbols
Setting the map scale
Setting the map scale automatically
Updating
Map functions
MB Apps
Calling up Digital Extras
Calling up the Mercedes me ID user account
Unlinking the Mercedes me ID user account
MBAC
calling up and operating
MBUX multimedia system, Multimedia system
Activating/deactivating standby mode
Adjusting the volume

Calling up applications
Display settings
Factory setting
Global search
Home screen
MB Apps
Overview
Set keyboard
Setting route-based speed adaptation
Standby mode function
Switching the sound on/off
Touchscreen

MBUX voice assistant

E-mails
Language setting
Media voice commands
Online voice control
Operable functions
Operating safety
Setting
Speech quality
Voice commands
Voice prompting

Media

General information
Menu (on-board computer)
Operating media playback (on-board computer)

Selecting a media source (on-board computer)

Media display

Home screen

Operating

Media mode

Adding a favourite song

Connecting Bluetooth® audio equipment

Connecting USB devices

Controlling media playback

Copyright and trademarks

Information about the search function in categories

Overview of the media menu

Playing back similar music tracks

Removing a favourite song

Starting a search in categories

Starting media playback

Supported formats and data storage media

Surprise mix

Using the keyword search

Medical aids

Memory function

Outside mirrors

Seat

Menu (on-board computer)

Assistant display

Media

Navigation

Overview
Radio
Service
Telephone
Trip

Mercedes-Benz Advanced Control

calling up and operating
Overview

Mercedes-Benz Connect

Accident and Breakdown Management Digital Extras
Information
Making a call via the overhead control panel
Transferred data

Mercedes-Benz emergency call system, Call for help, Emergency call

Automatic emergency call
Availability
Data transfer
Manual emergency call
Overview
Self-diagnosis

Mercedes-Benz GenuineParts

Mercedes-Benz service centre

Mercedes-Benz Support calls

Arranging a service appointment
Consent to data transfer
Information on the call via the overhead control panel

Making a call via the overhead control panel
Mercedes-Benz Support
Transferred data

Message memory

Messages, Short messages

Calling a message sender
Deleting
Dictating
Forwarding
MBUX voice commands
Overview
Read-aloud function
Reading
Replying
Sending
Setting the displayed text messages
Using a phone number or URL

Mirror

adjusting/setting anti-dazzle mode (inside rearview mirror)
adjusting/setting anti-dazzle mode (outside mirrors)

Mirrors

digital inside rear-view mirror

Mobile phone

Cancelling permission for Internet connection
Charging (USB port)
Charging wirelessly (front)

Frequencies
Maximum transmission output
Smartphone integration
Telephone

Modification

Limited protection

Modifications

Motion detector (load compartment)

Mounting a load

Moving-off Information Assist

Activating/deactivating

Music online

Calling up
Calling up the settings
Search function

N

Navigation

- Activating
- Destination entry
- MBUX voice commands
- Menu (on-board computer)
- Overview
- Updating the map data

Navigation announcements

- Activating/deactivating
- Adjusting the volume
- Repeating
- Switching audio fadeout on/off

Near Field Communication (NFC)

- Connecting a mobile phone to the MBUX multimedia system
- Information
- Switching mobile phones
- Using a mobile phone

Near-field communication

- Activating/deactivating

NFC

Notes on navigation (on-board computer)

Notifications Centre

- Calling up a notification

Editing a notification
Message types
Overview
Selecting actions

O

Objects in the vehicle interior
- Limited protection

Occupant safety
- Airbag
- Automatic measures after an accident
- Basic information
- Child seat
- Information on the child restraint system
- Information on the correct seat position
- Pets in the vehicle
- Pregnancy (seat belt)

Off-road menu
- Overview
- Setting

On-board computer, Computer
- Assistant display menu
- Diesel particulate filter load display
- Display
- Displaying the service due date
- Media menu
- Menu overview
- Navigation menu
- Operating
- Radio menu

Service menu
Setting the hot-water auxiliary heater
Setting the stationary heater/ventilation
Telephone menu
Trip menu
On-board diagnostic interface
On-board electronics
Engine electronics
Fitting two-way radios
Onboard Logic Unit
Data storage
Online services
Online services
Open Source Software
Opening/closing the bonnet
Operating fluids
AdBlue®
Brake fluid
Diesel
Engine oil
Notes
Notes on coolant (engine)
Refrigerant (air conditioning system)
Windscreen washer fluid
Operating permit number (EC)
Operating safety
Changes in the engine output

Information

Operating system

On-board computer

Outside mirrors

Adjusting/setting anti-dazzle mode

Blind Spot Assist

Folding in/out

Memory function

Setting options

Overhead control panel

Adjusting the interior lighting

Overview

P

Paint code

Park pawl

Deactivating manually

Park position

Engaging

Engaging automatically

Parking

PARKTRONIC

Parking Assist

PARKTRONIC

Parking Assist PARKTRONIC

Activating/deactivating

Close-range braking

Function

Setting warning tones

Parking assistance system

Close-range braking

Parking assistance systems

Drive Away Assist

PARKTRONIC

Parking brake (manual)

Parking brake lever

Parking lights
- Activating/deactivating

Parking option
- Displaying on the map

Parking service
- Displaying a parking option on the map
- Selecting parking options

Parking space
- Finding

Parking up

PARKTRONIC

Partition sliding door
- Opening/closing

Period out of use
- Activating/deactivating standby mode

Permissible axle load

Permissible gross mass

Permissible towing methods

Pets in the vehicle

PIN protection
- System PIN protection

Placing a load on the wheel arch

Plastic trim (care)

Platform dropsides
- Attaching/detaching
- Opening/closing
- Side walls

POI

Selecting

POI symbols

Selecting

Post-collision brake

Power supply

Battery main switch

Switching on (start/stop button)

Pregnancy

Information on the correct seat position

Seat belt

Protection

Information (how the restraint system works)

Limited

Pulling away

Q

QR code for rescue card

Qualified specialist workshop

R

Radar and ultrasonic sensors

Damage

Radar sensors

Care

Radio

Activating

Activating/deactivating radio text

Calling up the station list

Deleting stations

Displaying radio text

Editing station presets

Entering a frequency directly

Managing favourites

MBUX voice commands

Menu

Menu (on-board computer)

Moving stations

Overview

Searching for a channel

Setting a channel

Setting the frequency band

Storing radio stations

Radio (audio system)

Switching traffic announcements on/off

Radio connection
- Key

Radio regulations
- Importer information
- Regulatory radio identification
- Specific absorption rate
- Wireless applications

Rated tensile force of tie-down eyes

REACH regulation

Rear compartment lighting (motion detector)

Rear Cross Traffic Alert, Cross traffic warning
- Function
- Setting (MBUX multimedia system)

Rear fog light

Rear seat belt
- Status indicator

Rear seat belt status display

Rear window wiper
- Activating/deactivating

Rear-compartment climate control
- Automatic control
- Setting

Rear-end doors
- Opening beyond 90°
- Opening/closing (from the inside)
- Opening/closing (from the outside)

Recycling

Refrigerant

Refrigerant (air conditioning system)

Refuelling

- Displaying the AdBlue® level
- Refuelling the vehicle
- Topping up AdBlue®

Regeneration

- Notes
- Starting/cancelling

Registration

Regulating headlamp range

Remote control (stationary heater/ventilation)

- Setting

Remote control (stationary heating/ventilation)

- Displays
- Replacing the battery

Replacement key, Spare key

Replacing

- Fuses

Replacing an illuminant

- Additional turn signal light (all-wheel drive vehicles)
- Rear turn signal lights (panel van/Tourer)
- Reversing light (panel van/Tourer)
- Tail lamp illuminant types (panel van/Tourer)

Replacing light bulbs

- Interior lamp (rear)

Licence plate lighting
Light sources (front)
Notes
Reversing light (chassis)
Turn signal lights (chassis, rear)

Rescue card QR code

Resetting

MBUX reset function

Responsibility

Driving safety systems

Restraint system

Basic information
Basic instructions for children
Deployment situations
Functionality
Information on mode of operation
Information on the correct seat position

Limited protection
Malfunction
Protection
Self-test
Warning lamp

Restricting the shift range

Reverse gear

Deactivating/activating the warning tone

Reverse warning device

Reversing camera
- Activate via GPS
- Care
- Function
- Manage activation points

Reversing light
- Replacing light bulbs (chassis)

Reversing lights
- Replacing illuminants (panel van/ Tourer)

Roll away protection

Roof load

Roof luggage rack, Carrier system, Loading
- Load
- Securing

Roof ventilator
- Activating/deactivating load compartment ventilation

Route
- Accepting a detour recommendation
- Alternative route
- Calculating
- Calculating alternative routes
- Commuter route
- Displaying destination information
- Displaying the route list
- Editing a stored route
- Navigation
- Navigation with a trailer and oversized vehicle

Planning
Recording
Saving a recorded route
Selecting a type
Selecting notifications
Selecting options
Starting a saved route
Starting the automatic service station search
Switching the automatic filling station search on/off

Route guidance

Cancelling
Changing direction
Destination reached
Lane recommendations
Motorway information
Notes
Off-road

Route-based

speed adaptation

Route-based speed adaptation

Function
Setting

Running-in notes

S

Safety system

Safety vest

Satellite map

Saving a destination suggestion as a favourite

Searching for a channel

Seat, Driver's seat

- 4-way lumbar support
- 8-way adjustment options
- Adjusting manually (front)
- Adjusting the head restraint manually
- Adjusting the seat backrests (rear bench seat)
- Adjusting the seat cushion (double co-driver's seat)
- Correct driver's seat position
- Door control panel
- Electrical adjustment (front)
- Folding the folding seat up/down
- Installing/removing rear bench seat
- Manual adjustment without Comfort Package (front)
- Memory function
- Notes for vehicles without a front passenger seat
- rotating (front seat)
- Switches the seat heating on/off

Seat belt

- Adjusting the height

Cleaning
Fastening
Notes on wearing correctly
Rear seat belt status display
Releasing
Warning lamp
Wearing during pregnancy

Seat belt tensioners
Inflating

Seat belt warning
Seat cover (care)
Seats, Rear bench seat
Second telephone
Connecting
Securing loads
Tie-down eyes
Securing luggage
Selector lever

Self-test
Restraint system
Sensors
Information
Sensors (care)
Service (on-board computer)
Service centre
Service station search
Starting automatic search

Setting summer time

Setting the air distribution

Setting the date format

Setting the distance unit

Settings

- Information

Shifting

- Gearshift recommendation (manual transmission)

Short-distance trips

Side windows

- Close with key
- Convenience closing
- Convenience opening
- Opening with the key
- Opening/closing
- Problem
- Resetting

Sideguard Assist

- Function and notes
- Switching warning tones on/off
- System limits
- Warning by Sideguard Assist

Sliding door

- Child safety lock
- electric sliding door
- Electrical closing assist

Function
Open/close with button
Opening/closing (from the inside)
opening/closing (from the outside)

Slippery road surfaces

Smartphone integration

Apple CarPlay®/Android Auto

Snow chains, Anti-skid chains

Socket

Trailer hitch

Socket (12 V)

Centre console (front)

Socket (230 V)

Front centre console
Notes

SOS button

Sound settings

Adjusting treble, mid-range and bass settings
Automatic loudness normalisation
Calling up the sound menu
Setting the balance and fader

Spare parts

Spare wheel

Fitting/removing
Notes

Specialist workshop

Specific absorption rate (SAR)

Speed

Limit, Limiter

Speed control

Active Distance Assist DISTRONIC

Cruise control

Limiter

Speed limit

Winter tyres

Speed Limit Assist

Adjusting

Function

System limits

Speedometer (digital)

Standing lights

Activating/deactivating

Start-off Assist

Start-off Information Assist

Function

System limits

Warning by Start-off Information Assist

Start/stop button

Parking the vehicle

Starting the vehicle

Switching on the power supply or the vehicle

Start/stop function
Starting-off aid
Drive Away Assist
Hill Start Assist
Station
Deleting
Entering a frequency directly
Managing favourites
Moving
Setting
Storing
Station list
Calling up
Station presets
Editing
Stationary heater/ventilation
Adjusting (on-board computer)
Hot-water auxiliary heater
Problems
Setting (remote control)
Stationary heating/ventilation
Displays (remote control)
Steer Assist
Active Steering Assist
Steering wheel
Adjusting
Driver's airbag

Steering wheel heater

Steering wheel heater

Step (electrical)

Stopping the alarm

Storing

a speed, cruise control

a speed, DISTRONIC

a speed, limiter

Stowage areas

Stowage compartment (vehicle tool kit)

Stowage space

Armrest

Bottle holder

Centre console

Door

Glove compartment

Streaming online music

Suggestions

Configuring

Deleting

Summer tyres

Surround lighting

Activating/deactivating

SVHC

Substances of very high concern

Switch clock

Overview

Setting

setting (auxiliary warm-air heater)

Setting the departure time

Setting the temperature/operating duration

Switching immediate heating mode on/off

Switch-off delay time

Exterior

Interior

Switches the seat heating on/off

Switching on the vehicle (start/stop but-ton)

Switching the rear window heater on/off

Switching the sound on/off

Switching the windscreen heater on/off

Synchronisation function

System PIN protection

Activating/deactivating

System settings

Activating/deactivating system PIN protection

MBUX reset function

Setting the distance unit

Setting the time zone

Setting the time/date format

Switching near-field communication (NFC) on or off

Transmission of the vehicle position

T

Tailpipes (care)

Take-back of end-of-life vehicles

Tank content

AdBlue®

Tank content (fuel)

Note

Technical data

AdBlue® filling quantity

Engine oil filling capacity

Information

Maximum load (ladder rack)

Maximum tongue weight

Notes on the trailer hitch

Radio regulations

Specific absorption rate (SAR)

Tyre pressure monitoring system

Vehicle identification plate

Telephone, Smartphone

Activating functions during a call

Calls with several participants

Changing a function

Charging wirelessly (mobile phone in the front)

Connecting a mobile phone

Connecting a mobile phone (Near Field Communication (NFC))

Disconnecting a mobile phone
Importing contacts
Importing contacts (overview)
Incoming call during an existing call
Information
Interchanging mobile phones
MBUX voice commands
Menu (on-board computer)
Notes
Operating modes
Reception and transmission volume
Secure Simple Pairing
Setting the ringtone
Smartphone integration
Switching mobile phones (Near Field Communication (NFC))
Telephone menu overview
Telephone operation
Using Near Field Communication (NFC)
Voice recognition

Telephone (audio system)
Replacing a mobile phone

Telephony operating modes
Bluetooth® telephony

Television, Digital TV
MBUX voice commands

Temperature
setting centrally

TEMPMATIC (control panel)
Text messages
THERMOTRONIC (control panel)
Tie-down eyes
Fitting/removing
Load
Time
Manual time setting
Setting summer time
Setting the time zone
Setting the time/date format
Tone settings, Sound
Information
Tongue weight
Top Tether
Topping up the windscreen washer system
Touch Control
MBUX
On-board computer
Setting the sensitivity
Touchscreen
Entering characters
Tow-away protection
Activating/deactivating
Function
Tow-starting

Towing

Raised front/rear axle

With both axles on the ground

Towing eye

Fitting/removing

Storage location

Towing methods

Traffic announcements (audio system)

Switching on/off

Traffic information

Car-to-X-Communication

Displaying the traffic map

Displaying traffic incidents

Extending a Live Traffic Information subscription

Information on Live Traffic Information

Overview

Registering Live Traffic Information

Traffic Sign Assist

Function

Setting

Trailer hitch

Attaching the ball coupling

Care

Coupling/uncoupling a trailer

Information about trailer operation

Notes

Removing the ball neck
Socket
Trailer loads
Trailer operation
Active Lane Keeping Assist
Attaching the ball coupling
Calculating a route
Coupling/uncoupling a trailer
Maximum tongue weight
Notes
Removing the ball neck
Socket
Trailer loads
Trailer stabilisation
Transferred vehicle data
Android Auto
Apple CarPlay®
Transmission position display
Transport (vehicle)
Transport by rail
Trim element (care)
Trip
Displaying total distance
Menu (on-board computer)
Trip computer
Displaying
Resetting

Trip distance, Distance recorder, Trip meter
- Displaying
- Resetting

TuneIn
- Deleting stations
- Logging out
- Overview
- Registering
- Saving stations
- Selecting and connecting a station
- Selecting stream
- Setting options

Turn signal light
- Replacing light bulbs (chassis, rear)

Turn signal lights
- Operating the combination light switch
- Replacing illuminants (additional turn signal light, all-wheel drive vehicle)
- Replacing illuminants (panel van/ Tourer, rear)

TV
- MBUX voice commands

Two-way radios
- Frequencies
- Installation
- Maximum transmission output

Tyre pressure
- Checking manually
- Notes

Restarting the tyre pressure monitoring system

Tyre pressure monitoring system

Checking air pressure

Checking temperature

Function

Technical data

Tyre pressure table

Tyre temperature

Checking

Tyre pressure monitoring system

Tyre tread

Tyre-change tool kit

Tyres

Checking

Checking temperature

Direction of rotation

Fitting

M+S tyres

Mounting

Noise

Removing

Replacing

Restarting the tyre pressure monitoring system

Selection

Snow chains

Storing

Summer tyres

Tyre pressure monitoring system
Tyre pressure table
Unusual handling characteristics
Wheel size categories

U

Unfastening

Units of measurement

Setting

Unlocking setting

Unlocking/locking

Additional door lock

Updating software, System update, Update

Error message

Information

Performing

USB port (multimedia system)

Connecting devices

USB port (rear passenger compartment)

User profiles, Personalisation

Adding a user

Notes

Overview

Requirements for use

Selecting a user

Selecting options

Synchronising

User-specific content

Using kickdown, Acceleration

Using the chock

V

Variable limiter

Vehicle

- Activating/deactivating standby mode
- Activating/deactivating the automatic locking mechanism
- Additional door lock
- Correct use
- Data storage
- Diagnostics connection

Identification plate

Implied warranty

loading

lock automatically

lock automatically (MMS)

Locking/unlocking (from the inside)

Locking/unlocking emergency key

Lowering

Medical aids

Parking up

QR code for rescue card

Raising

REACH regulation

Registration

Standby mode function

Starting (emergency operation mode)

Starting (start/stop button)
SVHC/substances of very high concern
Switching off (start/stop button)
Switching on power supply (start/stop button)
Ventilating (convenience opening)
Voice commands for MBUX voice assistant
Vehicle cameras, Cameras
Vehicle data
Display, MBUX
Displaying, DYNAMIC SELECT
Notes
Transferring to Android Auto
Transferring to Apple CarPlay®
Vehicle identification number
Vehicle identification plate
Vehicle information
Displaying
Vehicle key
Vehicle level
ENR (electronic level control)
Raising/lowering
Vehicle location
Switching transmission on/off
Vehicle position
Storing
Vehicle sensors

Vehicle tool kit, Tool

- Information
- Removing
- Stowage compartment
- Towing eye

Vehicles without a front passenger seat

- Notes

Vents

VIN

Voice assistant

- Voice prompting

Voice recognition

Volume

- Setting

W

Warning lamp

Warning system

Warning tone, reverse gear

Warning tones

- Sideguard Assist

Warning triangle

- Removing
- Setting up

Warning/indicator lamp

- ABS warning lamp
- Active Brake Assist warning lamp
- Brakes warning lamp (red)
- Coolant warning lamp
- Door indicator lamp
- Electrical fault warning lamp
- Engine diagnostics warning lamp
- ESP® OFF warning lamp
- ESP® warning lamp flashes
- ESP® warning lamp lights up
- Fuel reserve warning lamp
- Parking brake indicator lamp (red)
- Parking brake indicator lamp (yellow)
- Power steering warning lamp (red)
- Restraint system warning lamp

Seat belt warning lamp flashes
Seat belt warning lamp lights up
TCO Tachograph warning lamp
Tyre pressure monitoring system warning lamp flashes
Tyre pressure monitoring system warning lamp lights up
Warning lamp for distance warning

Warning/indicator lamps

Overview

Washer fluid

Information
Notes

Washing by hand

Wear

Limited protection

Weather information

Web browser

Calls up options

Deleting browser data

Web browsers

Calling up a web page
Calling up the settings
Deleting a bookmark
Managing bookmarks
Setting in the background

Website

Setting up a Wi-Fi hotspot

Wedge

WET WIPER SYSTEM

Wheel rotation

Wheel spanner

Wheels

- Care
- Changing
- Checking
- Checking air pressure
- Checking temperature
- Fitting
- Flat tyre
- Mounting
- Noise
- Removing
- Replacing
- Restarting the tyre pressure monitoring system
- Selection
- Snow chains
- Storing
- Tyre pressure
- Tyre pressure monitoring system
- Tyre pressure table
- Unusual handling characteristics
- Wheel size categories

Wheels (care)

Wi-Fi

Activating/deactivating

Information on connection

Setting up a hotspot

Setting up an Internet connection

Windows

Opening/closing

Windows (care)

Windscreen

Replacing the wiper blades

Windscreen washer fluid

Information

Notes

Windscreen wipers

Activating/deactivating

Replacing the wiper blades

Replacing the wiper blades (WET WIPER SYSTEM)

Replacing wiper blades (rear window)

Switching on/off (rear window)

Switching on/off (windscreen)

Winter operation

Winter tyres

Limiter

Notes

Setting the permanent speed limit

Wiper blades

Care

Replacing (rear window)

Replacing (WET WIPER SYSTEM)

Replacing (windscreen)

Wireless applications

Wireless charging

Mobile telephone (front)

Notes

Workshop

Publication details

WEBSITE
Further information about Mercedes-Benz vehicles and about Mercedes-Benz AG can be found on the following websites:

https://www.mercedes-benz.com

https://group.mercedes-benz.com

EDITORIAL TEAM
If you have any questions or suggestions regarding this Owner's Manual, please contact the technical editorial team at the following address:

Mercedes-Benz AG, HPC: CAC, Customer Service, 70546 Stuttgart, Germany

© Mercedes--Benz AG: Not to be reprinted, translated or otherwise reproduced, in whole or in part, without written permission from Mercedes--Benz AG.

VEHICLE MANUFACTURER
Mercedes-Benz AG

Mercedesstraße 120

70372 Stuttgart

Germany

F907 0076 02