Disclaimer
The following online version of the Owner's Manual describes all models as well as all the standard and optional equipment of your vehicle. Country-specific differences in the language variants are possible. Note that your vehicle may not be fitted with all features described. This is also the case for safety-relevant systems and functions. Please contact your authorised Mercedes-Benz dealer if you would like to have a printed Owner's Manual for other vehicle models and vehicle model years. The online version is the current valid Owner's Manual version. Possible variations to your vehicle may not be taken into account as Mercedes-Benz constantly updates their vehicles and equipment to the state of the art and introduces changes in design and equipment.
Please also read the printed Owner's Manual, any supplementary documents and the digital Owner's Manual in the vehicle.

Copyright
All Rights Reserved. All texts, images, graphics, are subject to Copyright and other laws for the protection of intellectual property. They may not be copied for commercial purposes or for transmission, nor changed and used on other websites.



Mercedes-Benz



GLB

Owner's Manual

Mercedes-Benz

Front passenger airbag warning



WARNING Risk of injury or fatal injuries if the front passenger airbag is enabled

If the front passenger airbag is enabled, a child on the front passenger seat may be struck by the front passenger airbag during an accident.

NEVER use a rearward facing child restraint system on a seat protected by an ENABLED FRONT AIRBAG in front of it, this can result in DEATH or SERIOUS INJURY to the child.

Observe the chapter "Children in the vehicle".

Thank you for purchasing a Mercedes-Benz

Before you first drive off, read this Owner's Manual carefully and familiarise yourself with your vehicle. For your own safety and a longer operating lifespan of the vehicle, follow the instructions and warning notices in this Owner's Manual. Disregarding them may lead to damage to the vehicle or injury to people.

The standard equipment and product description of your vehicle may vary and depends on the following factors:

- Model
- order
- national version
- availability

The illustrations in this Owner's Manual show a left-hand drive vehicle. On right-hand-drive vehicles, the layout of car parts and control elements differs accordingly.

Mercedes-Benz is constantly developing its vehicles further.

Mercedes-Benz therefore reserves the right to introduce changes in the following areas:

- design
- equipment
- technical features

The equipment in your vehicle may therefore differ from that shown in the descriptions and illustrations.

The following documents are integral parts of the vehicle:

- Digital Owner's Manual
- printed Owner's Manual
- service booklet
- equipment-dependent Supplements

Keep these documents in the vehicle at all times. If you sell the vehicle, always pass all of the documents on to the new owner.

2475844006Z102



Symbols **5**

At a glance **6**
Cockpit 6
Indicator and warning lamps (standard) 10
Indicator and warning lamps (widescreen cockpit) 12
Overhead control panel 14
Door control panel and seat adjustment 16
Emergencies and breakdowns 18

Digital Owner's Manual **20**
Calling up the Digital Owner's Manual 20

General notes **22**
Protection of the environment 22
Take-back of end-of-life vehicles 22
Mercedes-Benz GenuineParts 23
Owner's Manual 24
Operating safety 24
Declaration of conformity 25
Diagnostics connection 30
Qualified specialist workshop 31
Vehicle registration 31
Correct use of the vehicle 32
Information on the REACH regulation 32
Notes for persons with electronic medical aids 32
Implied warranty 32
QR code for rescue card 33
Data storage 33
Copyright 35

Occupant safety **36**
Restraint system 36
Seat belts 38
Airbags 42
PRE-SAFE® system 49
Automatic measures after an accident 50
Safely transporting children in the vehicle 51
Notes on pets in the vehicle 72

Opening and closing **74**
Key 74
Doors 77
Load compartment 82
Side windows 88
Sliding sunroof 91
Anti-theft protection 95

Seats and stowing **99**
Notes on the correct driver's seat position 99
Notes on the height limit on the third row of seats 100
Seats 100
Steering wheel 111
Easy entry and exit feature 112
Operating the memory function 113
Stowage areas 114
Sockets 131
Wireless charging of the mobile phone and connection with the exterior aerial 134
Fitting/removing the floor mats 136

Light and sight **138**
Exterior lighting 138
Interior lighting 146
Changing bulbs (only for vehicles with halogen headlamps) 147

Windscreen wipers and windscreen washer system 150
Mirrors 154

Climate control 157
Overview of climate control systems 157
Operating the climate control system 158

Driving and parking 167
Driving 167
DYNAMIC SELECT switch 179
Manual transmission 182
Automatic transmission 184
Function of the 4MATIC 188
Refuelling 189
Parking 195
Driving and driving safety systems 202
Trailer hitch 257
Bicycle rack function 262
Vehicle towing instructions 263

Instrument Display and on-board computer 264
Notes on the instrument display and on-board computer 264
Instrument display overview 265
Overview of the buttons on the steering wheel 266
Operating the on-board computer 266
Overview of what is shown on the multi-function display 268
Head-up Display 268

MBUX multimedia system 271
Overview and operation 271
System settings 279
Navigation 282
Telephone 289
Mercedes me and apps 292
Mercedes-Benz emergency call system 301
Radio & media 308
Sound settings 313

Maintenance and care 314
ASSYST PLUS service interval display 314
Engine compartment 315
Cleaning and care 321

Breakdown assistance 328
Emergency 328
Flat tyre 330
Battery (vehicle) 337
Tow-starting or towing away 341
Electrical fuses 346

Wheels and tyres 350
Notes on noise or unusual handling characteristics 350
Notes on regularly inspecting wheels and tyres 350
Notes on snow chains 350
Tyre pressure 351
Wheel change 355
Emergency spare wheel 365

Technical data 368
Notes on technical data 368
On-board electronics 368

Vehicle identification plate, VIN and engine number overview 370
Operating fluids 372
Vehicle data 381
Trailer hitch 382

Display messages and warning/indicator lamps 386
Display messages 386
Warning and indicator lamps 440

Index 454

In this Owner's Manual, you will find the following symbols:

DANGER Danger due to not observing the warning notices

Warning notices draw your attention to hazards that may endanger your health or life, or the health or life of others.

▶ Observe the warning notices.

ENVIRONMENTAL NOTE Environmental damage due to failure to observe environmental notes

Environmental notes include information on environmentally responsible behaviour or environmentally responsible disposal.

▶ Observe environmental notes.

NOTE Damage to property due to failure to observe notes on material damage

Notes on material damage inform you of risks which may lead to your vehicle being damaged.

▶ Observe notes on material damage.

These symbols indicate useful instructions or further information that could be helpful to you.

▶ Instruction

(→ page) Further information on a topic

Display Information on the multifunction display/media display

Highest menu level, which is to be selected in the multimedia system

Relevant submenus, which are to be selected in the multimedia system

* Indicates a cause

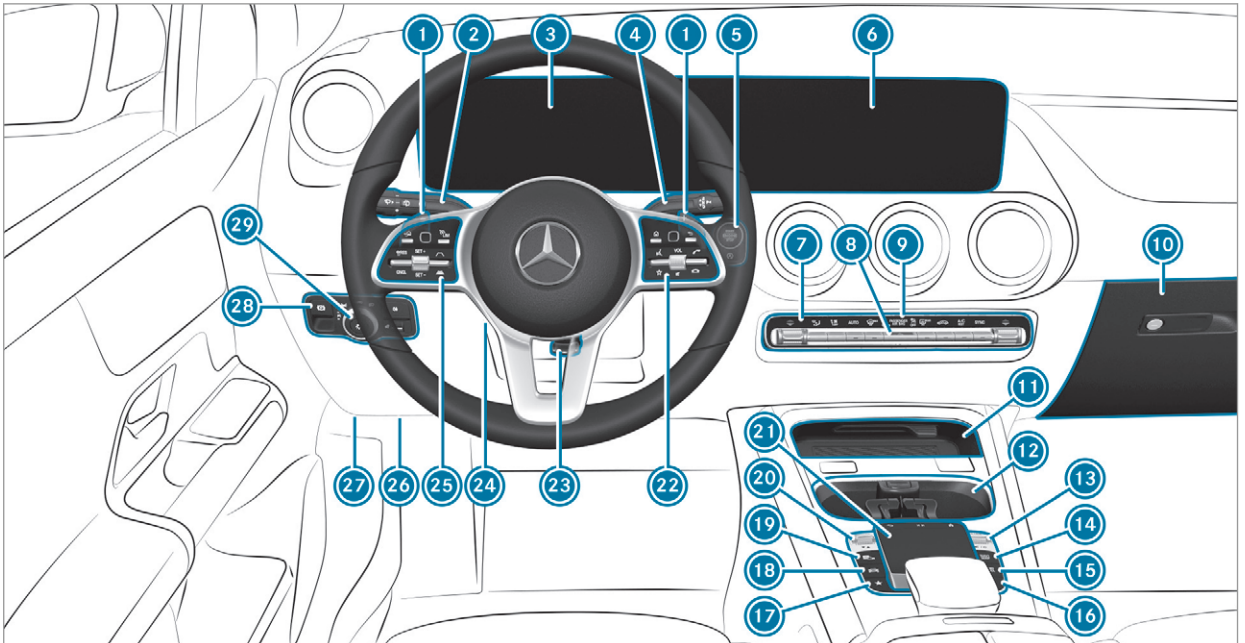

Left-hand-drive vehicles

1	Steering wheel gearshift paddles	→	186
2	Combination switch	→	140
3	Instrument display	→	265
4	DIRECT SELECT lever	→	184
5	Start/stop button	→	168
	ECO start/stop function	→	178
6	Media display	→	271
7	Climate control systems	→	158
8	Hazard warning light system	→	141
9	PASSENGER AIR BAG indicator lamps	→	46
10	Glove compartment	→	117
11	Stowage compartment	→	117
12	Cup holder		
13	Controller for volume and switching sound on/off	→	271
	Switches the MBUX multimedia system on/off	→	271
14	Calls up navigation	→	273
15	Calls up radio or media	→	273
16	Calls up the telephone	→	273
17	Calls up favourites	→	273
18	Calls up vehicle functions	→	273
19	Active Parking Assist	→	243
20	DYNAMIC SELECT switch	→	180
21	Touchpad	→	273
22	Control panel for the MBUX multimedia system	→	266
23	Adjusts the steering wheel	→	111
24	Switches the steering wheel heater on/off	→	111
25	Control panel:		
	On-board computer	→	266
	Cruise control or variable limiter	→	214
	Active Distance Assist DISTRONIC	→	219
26	Diagnostics connection	→	30

27	Opens the bonnet	→	316
28	Electric parking brake	→	198
29	Light switch	→	138

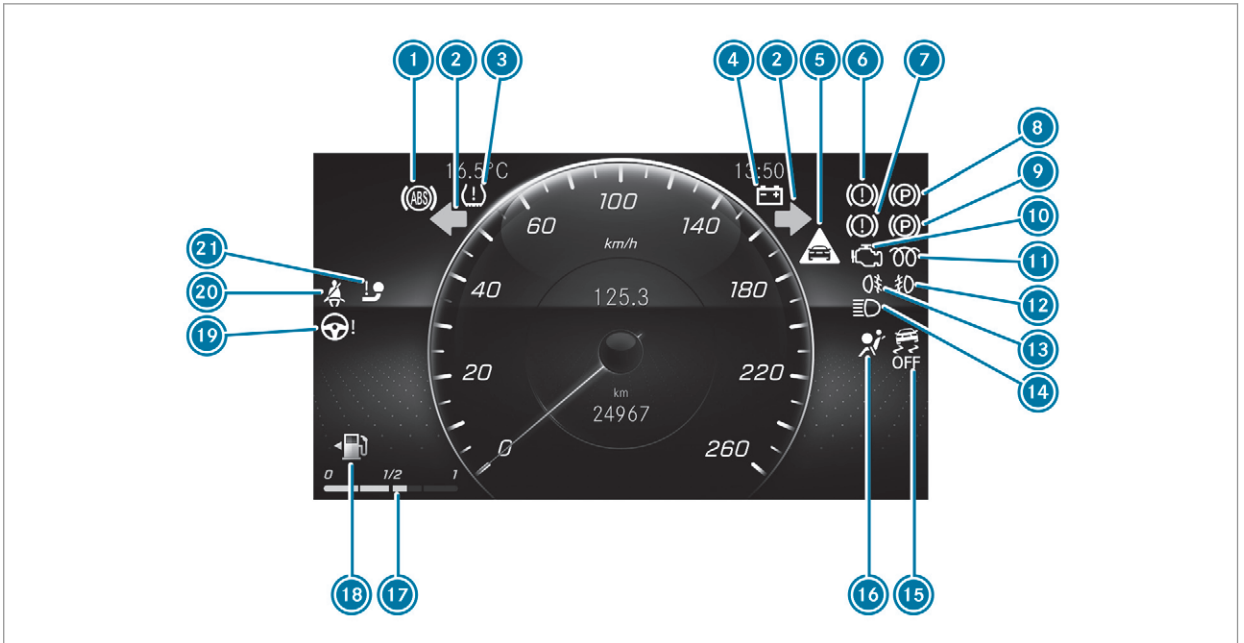

Instrument display (standard)

1	ABS	→	450
2	Turn signal lights	→	140
3	Tyre pressure monitor	→	452
4	Electrical fault	→	444
5	Distance warning	→	449
6	Brakes (yellow)	→	447
7	Brakes (red)	→	447
8	Electric parking brake (yellow)	→	447
9	Electric parking brake (red)	→	447
10	Engine diagnostics	→	444
11	Diesel engine: preglow		
12	Front fog lamps	→	138
13	Rear fog light	→	139
14	High beam	→	140
	Low beam	→	138
	Standing lights	→	138
15	ESP® OFF	→	450
	ESP®	→	450
16	Restraint system	→	442
17	Fuel level	→	265
18	Reserve fuel with fuel filler flap location indicator	→	444
19	Electric power steering	→	443
20	Seat belt	→	442
21	Trailer hitch	→	443

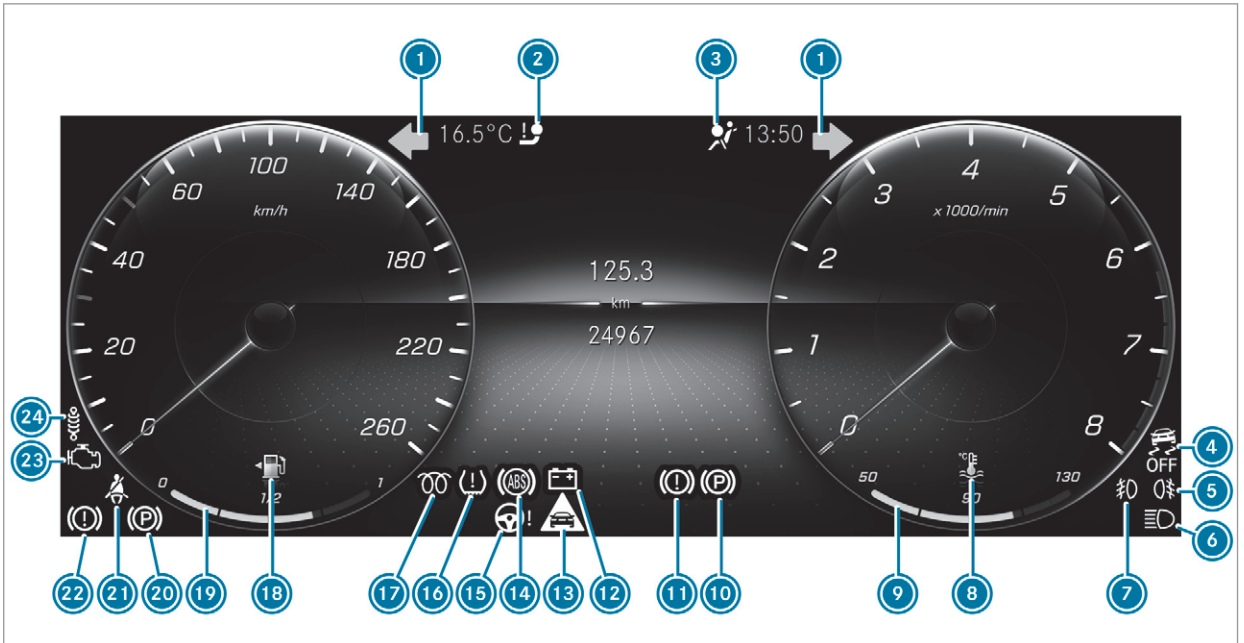

Widescreen cockpit instrument display

1	Turn signal indicators	→	140
2	Trailer hitch	→	443
3	Restraint system	→	442
4	ESP® OFF	→	450
	ESP®	→	450
5	Rear fog light	→	139
6	High beam	→	140
	Low beam	→	138
	Standing lights	→	138
7	Front fog lamps	→	138
8	Coolant temperature	→	444
9	Coolant temperature display	→	265
10	Electric parking brake (yellow)	→	447
11	Brakes (yellow)	→	447
12	Electrical fault	→	444
13	Distance warning	→	449
14	ABS	→	450
15	Electric power steering	→	443
16	Tyre pressure monitor	→	452
17	Diesel engine: preglow		
18	Reserve fuel with fuel filler flap location indicator	→	444
19	Fuel level	→	265
20	Electric parking brake (red)	→	447
21	Seat belt	→	442
22	Brakes (red)	→	447
23	Engine diagnostics	→	444
24	Indicator lamp inoperative		

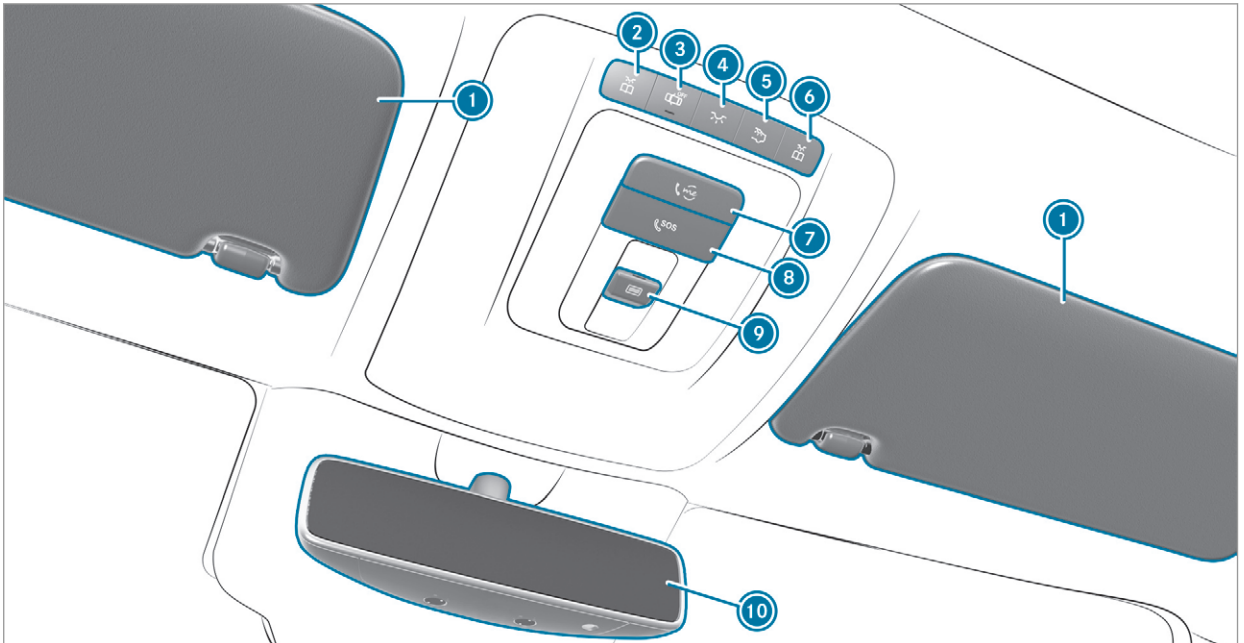
1
2
3
4
5
6
7
8
9
10
1
SOS

1	Sun visors		
2	Switches the left-hand reading lamp on/off	→	146
3	Switches automatic interior lighting control on/off	→	146
4	Switches the front interior lighting on/off	→	146
5	Switches the rear interior lighting on/off	→	146
6	Switches the right-hand reading lamp on/off	→	146
7	me button	→	294
8	SOS button	→	294
9	Opens closes the panorama sliding sunroof	→	91
	Opens/closes the roller sunblind	→	91
10	Inside rearview mirror	→	155

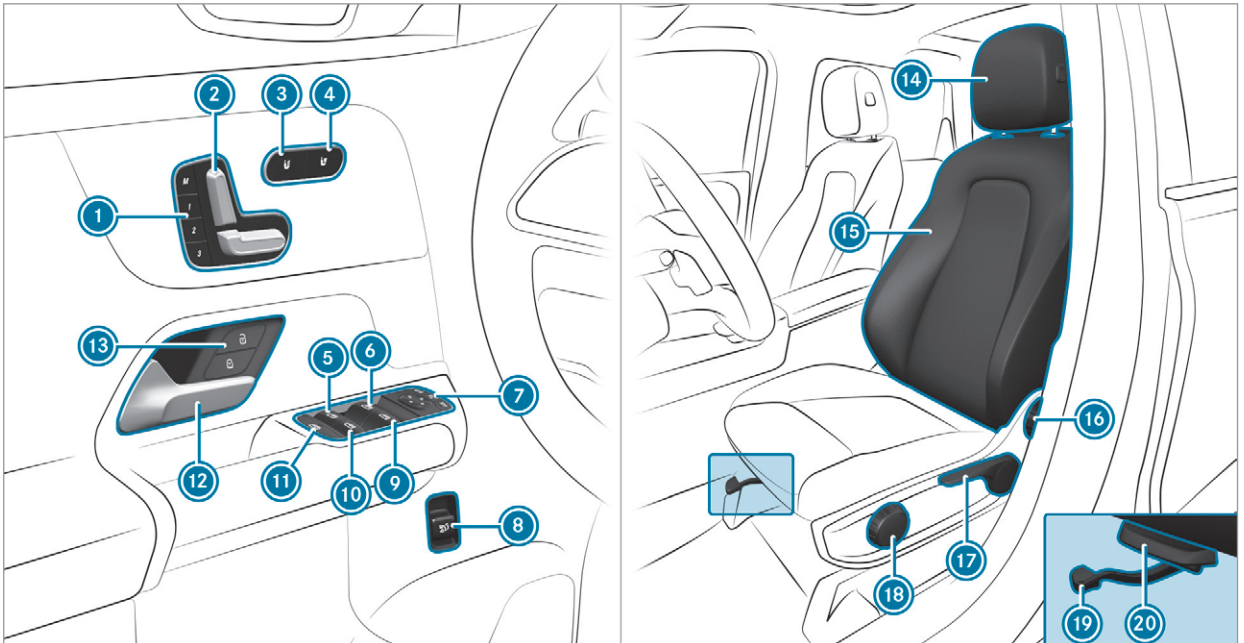
1
2
3
4
5
6
7
8
9
10
11
12
13
14
15
16
17
18
19
20

1	Operates the memory function	→	113
2	Adjusts the seats electrically	→	103
3	Switches the seat heating on/off	→	109
4	Switches the seat ventilation on/off	→	110
5	Opens/closes the rear left side window	→	88
6	Opens/closes the left side window	→	88
7	Operates the outside mirrors	→	154
8	Opens/closes the tailgate	→	82
9	Opens/closes the right side window	→	88
10	Opens/closes the rear right side window	→	88
11	Child safety lock for the rear side windows	→	72
12	Opens the door	→	78
13	Locks/unlocks the vehicle	→	78
14	Adjusts the head restraints	→	107
15	Configures the seat settings	→	109
16	Adjusts the seat backrest inclination	→	102
17	Adjusts the seat height	→	102
18	Adjusts the seat cushion inclination	→	102
19	Sets the seat fore-and-aft position	→	102
20	Adjusts the seat cushion length	→	102

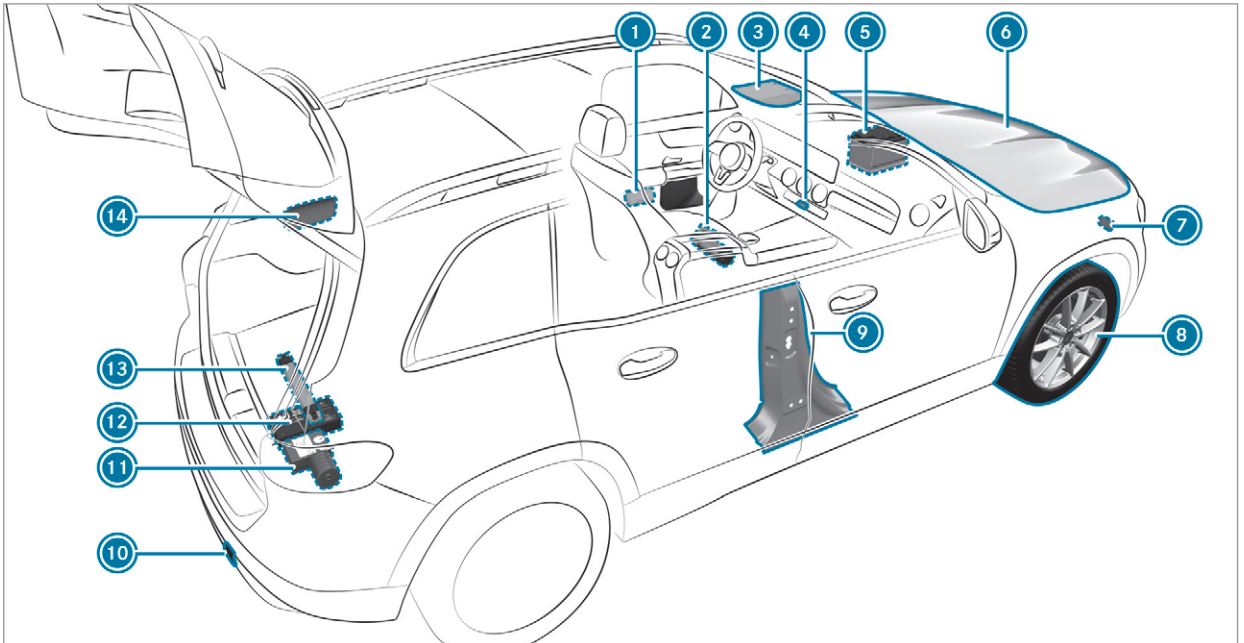
1
2
3
4
5
6
7
8
9
10
11
12
13
14

1	Safety vests	→	328
2	Fire extinguisher	→	329
3	me button and SOS button	→	294
4	Hazard warning light system	→	141
5	Starting assistance	→	340
6	To check and top up operating fluids	→	372
7	To tow-start and tow away	→	342
8	Flat tyre	→	330
9	QR code for accessing the rescue card	→	33
10	To tow-start and tow away	→	342
11	TIREFIT kit	→	332
12	First-aid kit (soft sided)	→	329
13	Warning triangle	→	328
14	Fuel filler flap with instruction labels for tyre pressure, fuel type and QR code for accessing the rescue card	→	189

Calling up the Digital Owner's Manual

Multimedia system:

→ ⌂ ▸▸ Info ▸▸ Owner's Manual ▸▸ ⓘ

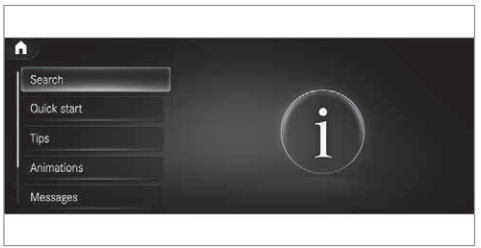

The Digital Owner's Manual describes the functions and operation of the vehicle and the multimedia system.

▶ Select one of the following menu items in the Digital Owner's Manual:

- Search: search for keywords in order to find quick answers to questions about the operation of the vehicle.
- Quick start: find the first steps towards setting up your vehicle.
- Tips: find information that prepares you for certain everyday situations with your vehicle.
- Animations: watch animations of the vehicle functions.
- Messages: receive additional information about the messages in the instrument display.
- Bookmarks: gain access to your personally saved bookmarks.
- Language: select the language for the Digital Owner's Manual.

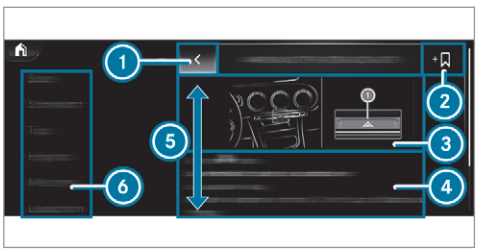

① Back
② Adds bookmarks
③ Picture
④ Contents section
⑤ Directions of movement of contents section
⑥ Menu

Some sections in the Digital Owner's Manual, e.g. warning notes, can be expanded and collapsed.

Additional methods of calling up the Digital Owner's Manual:

Direct access: open the required content in the Digital Owner's Manual by pressing and holding an entry on the tab bar in the multimedia system:

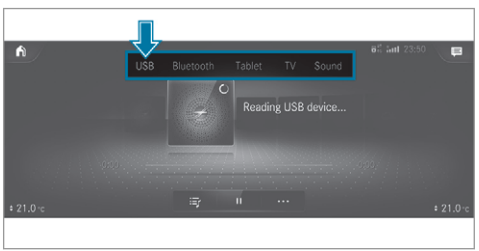

Instrument Display: call up brief information as display messages in the instrument cluster

LINGUATRONIC: call up via the voice control system

For safety reasons, the Digital Owner's Manual is deactivated while driving.

Protection of the environment

ENVIRONMENTAL NOTE Environmental damage due to operating conditions and personal driving style

The pollutant emission of the vehicle is directly related to the way you operate the vehicle.

Operate your vehicle in an environmentally responsible manner to help protect the environment. Please observe the following recommendations on operating conditions and personal driving style.

Operating conditions:

- Make sure that the tyre pressure is correct.
- Do not carry any unnecessary weight (e.g. roof luggage racks once you no longer need them).
- Adhere to the service intervals. A regularly serviced vehicle will contribute to environmental protection.
- Always have maintenance work carried out at a qualified specialist workshop.

Personal driving style:

- Do not depress the accelerator pedal when starting the engine.
- Do not warm up the engine while the vehicle is stationary.
- Drive carefully and maintain a suitable distance from the vehicle in front.
- Avoid frequent, sudden acceleration and braking.
- Change gear in good time and use each gear only up to ⅔ of its maximum engine speed.
- Switch off the engine in stationary traffic, e.g. by using the ECO start/stop function.
- Drive fuel-efficiently. Observe the ECO display for a fuel-efficient driving style.

Take-back of end-of-life vehicles

EU countries only:
Mercedes-Benz will take back your end-of-life vehicle for environment-friendly disposal in accordance with the European Union (EU) End-of-Life Vehicles Directive.

A network of vehicle take-back points and dismantlers has been established for you to return your vehicle. You can leave it at any of these points free of charge. This makes an important contribution to closing the recycling circle and conserving resources.

For further information about the recycling and disposal of end-of-life vehicles, and the take-back conditions, please visit the national Mercedes-Benz website for your country.

Mercedes-Benz GenuineParts

ENVIRONMENTAL NOTE Environmental damage caused by not using recycled reconditioned components

Mercedes-Benz AG offers recycled reconditioned components and parts with the same quality as new parts. The same entitlement from the implied warranty is valid as for new parts.

- Recycled reconditioned components and parts from Mercedes-Benz AG.

NOTE Impairment of the operating efficiency of the restraint systems from installing accessory parts or from repairs or welding

Airbags and seat belt tensioners, as well as control units and sensors for the restraint systems, may be installed in the following areas of your vehicle:

- doors
- door pillars
- door sills
- seats
- cockpit
- instrument cluster
- centre console
- lateral roof frame

- Do not install accessory parts such as audio systems in these areas.
- Do not carry out repairs or welding.
- Have accessories retrofitted at a qualified specialist workshop.

You could jeopardise the operating safety of your vehicle if you use parts, tyres and wheels as well as accessories relevant to safety which have not been approved by Mercedes-Benz. Safety-relevant systems, e.g. the brake system, may malfunction. Only use Mercedes-Benz GenuineParts or parts of equal quality. Only use tyres, wheels and accessory parts that have been specifically approved for your vehicle model.

Mercedes-Benz tests original parts and conversion parts and accessory parts that have been specifically approved for your vehicle model for their reliability, safety and suitability. Despite ongoing market research, Mercedes-Benz is unable to assess other parts. Mercedes-Benz therefore accepts no responsibility for the use of such parts in Mercedes-Benz vehicles, even if they have been officially approved or independently approved by a testing centre.

Certain parts are only officially approved for installation or modification if they comply with legal requirements. All Mercedes-Benz GenuineParts meet the approval requirements. The use of non-approved parts may invalidate the vehicle's general operating permit.

This is the case in the following situations:

- the vehicle type is different from that for which the vehicle's general operating permit was granted.
- other road users could be endangered.
- the exhaust gas or noise level gets worse.

Always specify the vehicle identification number (VIN) (→ page 370) when ordering Mercedes-Benz GenuineParts.

Owner's Manual

This Owner's Manual describes all models and all standard and optional equipment available for your vehicle at the time of this Owner's Manual going to press. Country-specific differences are possible. Note that your vehicle may not be fitted with all features described. This is also the case for systems and functions relevant to safety. Therefore, the equipment on your vehicle may differ from that in the descriptions and illustrations.

The original purchase agreement for your vehicle contains a list of all of the systems in your vehicle.

Should you have any questions concerning equipment and operation, please consult a Mercedes-Benz Service Centre.

The Owner's Manual and Service Booklet are important documents and should be kept in the vehicle.

Operating safety

WARNING Risk of injury due to malfunctions or system failure

In order to avoid malfunctions or system failures:

- Always have the specified service/maintenance work as well as any necessary repairs carried out at a qualified specialist workshop.

WARNING Risk of accident or injury due to improper modifications to electronic components

Modifications to electronic components, their software or wiring can impair their functionality and/or the functionality of other networked components or safety-relevant systems.

This can endanger the vehicle's operating safety.

- You must not tamper with wiring, electronic components, or their software.
- Always have work on electrical and electronic devices carried out at a qualified specialist workshop.

If you modify the on-board electronics, the general operating permit is rendered invalid.

Observe the "On-board electronics" section in "Technical data".

WARNING Risk of fire due to flammable materials on hot parts of the exhaust system

Flammable material such as leaves, grass or twigs may ignite if they come into contact with hot parts of the exhaust system.

- When driving on unpaved roads or off-road, regularly check the vehicle underside.
- Remove trapped plants or other flammable material, in particular.

▶ If there is damage, consult a qualified specialist workshop immediately.

! NOTE Damage to the vehicle

In the following situations, in particular, there is a risk of damage to the vehicle:

- the vehicle becomes grounded, e.g. on a high kerb or an unpaved road
- the vehicle is driven too fast over an obstacle, e.g. a kerb, speed bump or pothole
- a heavy object strikes the underbody or chassis components

In situations such as this, the body, the underbody, chassis components, wheels or tyres could be damaged without the damage being visible. Components damaged in this way can unexpectedly fail or, in the case of an accident, may not absorb the loads that arise as intended.

If the underbody panelling is damaged, flammable materials such as leaves, grass or twigs can collect between the underbody and the underbody panelling. These materials may ignite if they come into contact with hot parts on the exhaust system.

▶ Have the vehicle checked and repaired immediately at a qualified specialist workshop.

or

▶ If driving safety is impaired while continuing your journey, pull over and stop the vehicle immediately in accordance with the traffic conditions, and contact a qualified specialist workshop.

Declaration of conformity

Electromagnetic compatibility

The electromagnetic compatibility of the vehicle components has been checked and certified according to the currently valid version of Regulation UN R10.

Wireless vehicle components

For EU and EFTA countries only:
The following information applies to all wireless components of the vehicle and of the information systems and communication devices integrated into the vehicle:

The wireless components of this vehicle comply with the basic requirements and all other relevant conditions of Directive 2014/53/EU. You can obtain further information from a Mercedes-Benz Service Centre.

Brazil only:
Note on the two-way radio systems in the vehicle:

These systems are not protected from harmful interference and must not cause interference in duly approved systems.

Nigeria only:
Connection and use of the wireless communication equipment in this vehicle are permitted by the Nigerian Communications Commission.

Ukraine only:
The manufacturer hereby declares that the wireless vehicle components meet the technical regulations for two-way radios. You can obtain further information from a Mercedes-Benz Service Centre.

Manufacturer's specification
Below are the addresses of the manufacturers of wireless components. The addresses cannot be displayed on the equipment due to its size or type.

Tyre pressure monitoring sensors
Schrader Electronics Ltd, 11 Technology Park, Belfast Road, Antrim BT41 1QS, Northern Ireland

Remote keyless entry
Marquardt GmbH, Schloßstrasse 16, 78604 Rietheim, Germany

Huf Hülsbeck & Fürst GmbH & Co. KG, Steeger Strasse 17, 42551 Velbert, Germany

Hella KGaA Hueck & Co., Rixbecker Strasse 75, 59552 Lippstadt, Germany

Remote keys control unit
Marquardt GmbH, Schloßstrasse 16, 78604 Rietheim, Germany

Leopold Kostal GmbH & Co. KG, Hauert 11, 44227 Dortmund, Germany

Continental Automotive GmbH, Siemensstrasse 12, 93055 Regensburg, Germany

Antenna modules
Hirschmann Car Communication GmbH, Stuttgarter Strasse 45-51, 72654 Neckartenzlingen, Germany

Kathrein Automotive GmbH & Co. KG, Römerring 1, 31137 Hildesheim, Germany

Door handles with near-field communication functions
Huf Hülsbeck & Fürst GmbH & Co. KG, Steeger Strasse 17, 42551 Velbert, Germany

Garage door openers
GenteX Corporation, 600 North Centennial Street, Zeeland MI 49464, USA

Interior monitoring radar
META Systems, Via Galimberti 9, 42124 Reggio Emilia, Italy

Radar sensors
Autoliv Electronics ASP Inc., 26545 American Drive, Southfield, MI 48034, USA

ADC Automotive Distance Control Systems GmbH, Peter-Dornier-Strasse 10, 88131 Lindau, Germany

Robert Bosch GmbH, Daimlerstrasse 6, 71229 Leonberg, Germany

Mobile communication and telematics
Harman Becker Automotive Systems GmbH, Postfach 2260, 76303 Karlsbad, Germany

Panasonic Automotive & Industrial Systems Europe GmbH, Robert-Bosch-Strasse 27-29, 63225 Langen, Germany

Mitsubishi Electric Corporation, 2-3-33 Miwa, Sanda-City, 669-1513 Hyogo, Japan

Wireless headphones
Harman Becker Automotive Systems GmbH, Postfach 2260, 76303 Karlsbad, Germany

General remote control
Ruwido Austria GmbH, Köstendorfer Strasse 8, 5202 Neumarkt, Austria

Valeo, 43 rue Bayen, 75017 Paris, France

Block heater remote control
Digades GmbH, Äußere Weberstrasse 20, 02763 Zittau, Germany

Wireless applications in the vehicle
Besides the typical frequencies for mobile communications, cars from Mercedes-Benz make use of the following automotive radio applications:

Wireless applications in the vehicle

Technology	Frequency range	Transmission output/magnetic field strength
Remote keyless entry	20 kHz (9–90 kHz)	≤ 72 dBµA/m at 10 m
Wireless power transmission	105 kHz (90–119 kHz)	≤ 42 dBµA/m at 10 m
Remote keyless entry Wireless power transmission	125 kHz (119–135 kHz)	≤ 42 dBµA/m at 10 m
Near-field communication	13.553–13.567 MHz	≤ 42 dBµA/m at 10 m
Remote keyless entry, garage door opener, tyre pressure monitoring	433 MHz (433.05–434.79 MHz)	≤ 10 mW e.r.p.
Block heater remote control, garage door opener	868 MHz (868.0–868.6 MHz)	≤ 25 mW e.r.p.

Technology	Frequency range	Transmission output/magnetic field strength
Block heater remote control, garage door opener	869 MHz (868.7–869.2 MHz)	≤ 25 mW e.r.p.
Bluetooth®, Kleer, RLAN, general remote controls, wireless headphones	2.4 GHz ISM band (2400–2483.5 MHz)	≤ 100 mW e.i.r.p.
Interior monitoring radar, RLAN	5.8 GHz UNII-3 (5725–5875 MHz)	≤ 25 mW e.i.r.p.
Remote keyless entry	7.25 GHz UWB (6.0–8.5 GHz)	≤ -41.3 dBm/MHz e.i.r.p mean ≤ 0 dBm/MHz e.i.r.p. peak
24 GHz ISM radar	24.05–24.25 GHz*	≤ 100 mW e.i.r.p.
24 GHz UWB radar	24.25–26.65 GHz*	≤ -41.3 dBm/MHz e.i.r.p mean ≤ 0 dBm/50 MHz e.i.r.p. peak
76 GHz radar	76–77 GHz	≤ 55 dBm peak e.i.r.p.

Technology	Frequency range	Transmission output/magnetic field strength
	* Model series launched on the market before April 2016	
Carsharing module	**NFC:** 13.553–13.567 MHz **Bluetooth:** 2402–2480 MHz	**NFC:** ≤ 42 dBµA/m at 10 m **Bluetooth:** ≤ + 4 dBm (power category 2)

Jack

Copy and translation of the original declaration of conformity:

EC declaration of conformity

1.

The signatory, as a representative

Manufacturer:

BRANO a.s.

74741 Hradec nad Moravicí, Opavská 1000,

Czech Republic

ID No.: 64-387-5933

VAT Reg. No.: CZ64-387-5933

declares, as our sole responsibility, that the product:

2. a)

Designation:

Jack

Type, number:

A) A 164 580 02 18, A 166 580 01 18

B) A 240 580 00 18

C) A 639 580 02 18

Year of manufacture: 2015

Fulfils all relevant conditions

Directive No. 2006/42/EC

b)

Description and purpose of use:

The jack is only intended for raising the specified vehicle in accordance with the operating instructions affixed to the jack.

3.

Reference data of the harmonised standards or specifications

A) ISO 4063, EN ISO 14341-A, DBL 7382.20, MBN 10435, AS 2693

B) ISO 4063, ISO 14341-A, DBL 7392.10, MBN 10435

C) DBL 7392.10, DBL 8230.10

The technical documentation of the product is stored at the manufacturer's plant. Representative for the compilation of the technical documentation: Director of the Technical Department Brano a.s.

4.

Hradec nad Moravicí

City

5.

05.05.2015

Date

Signed by

Director of Quality

TIREFIT kit

Copy and translation of the original declaration of conformity:

EC declaration of conformity

In accordance with EC Directive 2006/42/EC

We hereby declare that the product

Product designation: Daimler electric air pump

Model designation: 0851ve, DT/UW 200046

MB part no.: A 000 583 8200

complies with the following relevant regulations: 2004/108/EC

Applied harmonised standards, in particular:

DIN EN 55014-1

DIN EN 55014-2:2009-06

Manufacturer: Dunlop Tech GmbH

Address: Birkenhainerstrasse 77, 63450 Hanau

Authorised representative: IMS dept.

Date: June 2015

Signature: IMS-AM, IMS-AE-L

Diagnostics connection

The diagnostics connection is only intended for the connection of diagnostic devices at a qualified specialist workshop.

WARNING Risk of accident due to connecting devices to the diagnostics connection

If you connect the devices to the diagnostics connection of the vehicle, the function of the vehicle systems and operating safety may be impaired.

- Only connect devices to the diagnostics connection of the vehicle that have been tested for suitability and are safe.

WARNING Risk of accident due to objects in the driver's footwell

Objects in the driver's footwell may impede pedal travel or block a depressed pedal.

This jeopardises the operating and road safety of the vehicle.

- ▶ Stow all objects in the vehicle securely so that they cannot get into the driver's footwell.
- ▶ Always fit the floor mats securely and as prescribed in order to ensure that there is always sufficient room for the pedals.
- ▶ Do not use loose floor mats and do not place floor mats on top of one another.

! **NOTE** Battery discharging from using devices connected to the diagnostics connection

Using devices at the diagnostics connection drains the battery.

- ▶ Check the charge level of the battery.
- ▶ If the charge level is low, charge the battery, e.g. by driving a considerable distance.

Connecting equipment to the diagnostics connection can lead to emissions monitoring information being reset, for example. This may lead to the vehicle failing to meet the requirements of the next emissions inspection during the main inspection.

Qualified specialist workshop

A qualified specialist workshop has the necessary special skills, tools and qualifications to correctly carry out any necessary work on your vehicle. This particularly applies to safety-relevant works.

Always have the following work carried out on your vehicle at a qualified specialist workshop:

- safety-relevant works
- service and maintenance work
- repair work
- modifications as well as installations and conversions
- work on electronic components

Mercedes-Benz recommends a Mercedes-Benz service centre.

Vehicle registration

Mercedes-Benz may ask its service centres to carry out technical inspections on certain vehicles. The quality or safety of the vehicle is improved as a result of the inspection.

Mercedes-Benz can only inform you about vehicle checks if Mercedes-Benz has your registration data.

It is possible that your vehicle has not yet been registered in your name in the following cases:

- if your vehicle was not purchased at an authorised specialist dealer.
- if your vehicle has not yet been examined at a Mercedes-Benz service centre.

It is advisable to register your vehicle with a Mercedes-Benz service centre.

Inform Mercedes-Benz as soon as possible about any change in address or vehicle ownership. You can do this at a Mercedes-Benz service centre, for example.

Correct use of the vehicle

If you remove any warning stickers, you or others could fail to recognise certain dangers. Leave warning stickers in position.

Observe the following information in particular when driving your vehicle:

- the safety notes in this manual
- technical data for the vehicle
- traffic rules and regulations
- laws and safety standards pertaining to motor vehicles

Information on the REACH regulation

EU and EFTA countries only:

The REACH regulation (Regulation (EC) No. 1907/2006, Article 33) stipulates a duty to supply information about substances of very high concern (SVHCs).

Mercedes-Benz AG acts to the best of its knowledge to prevent these SVHCs from being used and to enable customers to safely handle these substances. There are SVHCs known to Mercedes-Benz AG, according to supplier information and internal product information, found in individual components of this vehicle in quantities of over 0.1 percent by weight.

Further information can be obtained at the following addresses:

- https://reach.daimler.com/de/home/
- https://reach.daimler.com/en/home/

Notes for persons with electronic medical aids

Mercedes-Benz AG cannot, despite carefully developing vehicle systems, completely rule out the interaction of vehicle systems with electronic medical aids such as cardiac pacemakers.

For this reason, the following can occur in isolated cases, depending on the aids used:

- aids malfunctioning
- adverse health effects

Observe the notes and warnings of the manufacturer of the aids; if in doubt, contact the device manufacturer and your doctor. Mercedes-Benz AG recommends using only few electrical vehicle systems if there is continuing uncertainty concerning the possibility of aids malfunctioning.

Have repairs and maintenance work in the area of vehicle components carrying live voltage and transmission aerials carried out by a qualified specialist workshop.

Implied warranty

! **NOTE** Damage to the vehicle arising from violation of these operating instructions.

Damage to the vehicle can arise from violation of these operating instructions.

This damage is not covered either by the Mercedes-Benz implied warranty or by the New- or Used-Vehicle Warranty.

▶ Follow the instructions in these operating instructions on proper operation of your vehicle as well as on possible vehicle damage.

QR code for rescue card

The QR code is secured in the fuel filler flap and on the opposite side on the B-pillar. In the event of an accident, rescue services can use the QR code to quickly find the appropriate rescue card for your vehicle. The current rescue card contains the most important information about your vehicle in a compact form, e.g. the routing of the electric lines.

Further information can be obtained at https://www.mercedes-benz.de/qr-code.

Data storage

Electronic control units

Electronic control units are fitted in your vehicle. Some of these are necessary for the safe operation of your vehicle, while some assist you when driving (driver assistance systems). In addition, your vehicle provides comfort and entertainment functions, which are also made possible by electronic control units.

Electronic control units contain data memories which can temporarily or permanently store technical information about the vehicle's operating state, component loads, maintenance requirements and technical events or faults.

In general, this information documents the state of a component part, a module, a system or the surroundings such as:

- operating status of system components (e.g. fill levels, battery status, tyre pressure)
- status messages concerning the vehicle or its individual components (e.g. number of wheel revolutions/speed, longitudinal acceleration, lateral acceleration, display of fastened seat belts)
- malfunctions or faults in important system components (e.g. lights, brakes)
- information on events leading to vehicle damage
- system reactions in special driving situations (e.g. airbag deployment, intervention of stability control systems)
- ambient conditions (e.g. temperature, rain sensor)

In addition to providing the actual control unit function, this data assists the manufacturer in detecting and rectifying faults and optimising vehicle functions. The majority of this data is temporary and is only processed in the vehicle itself. Only a small portion of the data is stored in the event or fault memory.

When your vehicle is serviced, technical data from the vehicle can be read out by service network employees (e.g. workshops, manufacturers) or third parties (e.g. breakdown services). Services include, for example, repair services, maintenance processes, warranty claims and quality assurance measures. The read out is performed via the legally prescribed port for the diagnostics connection in the vehicle. The respective service network locations or third parties collect, process and use the data. They document technical statuses of the vehicle, assist in finding faults and improving quality and are transmitted to the manufacturer, if necessary. Furthermore, the manufacturer is subject to product liability. For this, the manufacturer requires technical data from vehicles.

Fault memories in the vehicle can be reset by a service outlet as part of repair or maintenance work.

Depending on the selected equipment, you can import data into vehicle convenience and infotainment functions yourself.

This includes, for example:

- multimedia data such as music, films or photos for playback in an integrated multimedia system
- address book data for use in connection with an integrated hands-free system or an integrated navigation system
- entered navigation destinations
- data about the use of internet services

This data can be saved locally in the vehicle or it is located on a device which you have connected to the vehicle (e.g. a smartphone, USB flash drive or MP3 player). If this data is stored in the vehicle, you can delete it at any time. This data is sent to third parties only at your request, particularly when you use online services in accordance with the settings that you have selected.

You can store or change convenience settings/individualisations in the vehicle at any time.

Depending on the equipment, this includes, for example:

- settings for the seat and steering wheel positions
- suspension and climate control settings
- customisations such as interior lighting

If your vehicle is accordingly equipped, you can connect your smartphone or another mobile end device to the vehicle. You can control this by means of the control elements integrated in the vehicle. Images and audio from the smartphone can be output via the multimedia system. Certain information is simultaneously transferred to your smartphone.

Depending on the type of integration, this can include:

- general vehicle data
- position data

This allows you to use selected apps on your smartphone, such as navigation or music playback. There is no further interaction between the smartphone and the vehicle; in particular, vehicle data is not directly accessible. Which type of further data processing occurs is determined by the provider of the specific app used. Which settings you can make, if any, depends on the specific app and the operating system of your smartphone.

Online services

Wireless network connection

If your vehicle has a wireless network connection, it enables data to be exchanged between your vehicle and additional systems. The wireless network connection is enabled via the vehicle's transmission and reception unit or via connected mobile end devices (e.g. smartphones). Online functions can be used via the wireless network connection. This includes online services and applications/apps provided by the manufacturer or other providers.

Manufacturer's services

Regarding online services of the manufacturer, the individual functions are described by the

manufacturer in a suitable place (e.g. Owner's Manual, website of the manufacturer) along with the relevant data protection information. Personal data may be used for the provision of online services. Data is exchanged via a secure connection, e.g. the manufacturer's designated IT systems. Personal data is collected, processed and used via the provision of services exclusively on the basis of legal permissions or with prior consent.

The services and functions (sometimes subject to a fee) can usually be activated or deactivated. In some cases, this also applies to the entire vehicle's data connection. This excludes, in particular, legally prescribed functions and services.

Third party services

If it is possible to use online services from other providers, these services are the responsibility of the provider in question and subject to that provider's data protection conditions and terms of use. The manufacturer has no influence on the content exchanged.

For this reason, please ask the service provider for information about the type, extent and purpose of the collection and use of personal data when services are provided by third parties.

Copyright

Information on licences for free and open-source software used in your vehicle can be found on the data carrier in your vehicle document wallet and with updates on the following website:

https://www.mercedes-benz.com/opensource

Restraint system

Protection provided by the restraint system

The restraint system includes the following components:

- Seat belt system
- Airbags
- Child restraint system
- Child seat securing systems

The restraint system can help prevent the vehicle occupants from coming into contact with parts of the vehicle interior in the event of an accident. In the event of an accident, the restraint system can also reduce the forces to which the vehicle occupants are subjected.

A seat belt can only provide the best level of protection if it is worn correctly. Depending on the detected accident situation, seat belt tensioners and/or airbags supplement the protection offered by a correctly worn seat belt. Seat belt tensioners and/or airbags are not deployed in every accident.

In order for the restraint system to provide the intended level of protection, each vehicle occupant must observe the following information:

- Fasten seat belts correctly.
- Sit in an almost upright seat position with their back against the seat backrest.
- Sit with their feet resting on the floor, if possible.
- Always secure persons under 1.50 m tall in an additional restraint system suitable for Mercedes-Benz vehicles.

However, no system available today can completely eliminate injuries and fatalities in every accident situation. In particular, the seat belt and airbag generally do not protect against objects penetrating the vehicle from the outside. It is also not possible to completely rule out the risk of injury caused by the airbag deploying.

Reduced restraint system protection

WARNING Risk of injury or death due to modifications to the restraint system

Vehicle occupants may no longer be protected as intended if alterations are made to the restraint system.

- Never alter the parts of the restraint system.
- Never tamper with the wiring or any electronic component parts or their software.

If it is necessary to modify the vehicle to accommodate a person with disabilities, contact a qualified specialist workshop.

Mercedes-Benz recommends that you use driving aids which have been approved for your vehicle by Mercedes-Benz.

Restraint system functionality

When the ignition is switched on, a self-test is performed, during which the  restraint sys-

tem warning lamp lights up. It goes out no later than a few seconds after the vehicle is started. The components of the restraint system are then functional.

Malfunctioning restraint system

A malfunction has occurred in the restraint system if:

- the restraint system warning lamp does not light up when the ignition is switched on
- the restraint system warning lamp lights up continuously or repeatedly during a journey

WARNING Risk of injury due to malfunctions in the restraint system

Components in the restraint system may be activated unintentionally or not deploy as intended in an accident.

▶ Have the restraint system checked and repaired immediately at a qualified specialist workshop.

Function of the restraint system in an accident

How the restraint system works is determined by the severity of the impact detected and the type of accident anticipated:

- Frontal impact
- Rear impact
- Side impact
- Rollover

The activation thresholds for the components of the restraint system are determined based on the evaluation of the sensor values measured at various points in the vehicle. This process is preemptive in nature. The triggering/deployment of the components of the restraint system must take place in good time at the start of the collision.

Factors which can only be seen and measured after a collision has occurred do not play a decisive role in the deployment of an airbag. Nor do they provide an indication of airbag deployment.

The vehicle may be deformed significantly without an airbag being deployed. This is the case if only parts which are relatively easily deformed are affected and the rate of vehicle deceleration is not high. Conversely, an airbag may be deployed even though the vehicle suffers only minor deformation. If very rigid vehicle parts such as longitudinal members are hit, this may result in sufficiently high levels of vehicle deceleration.

Depending on the detected deployment situation, the components of the restraint system can be activated or deployed independently of each other:

- Seat belt tensioner: frontal impact, rear impact, side impact, rollover
- Driver's airbag, front passenger airbag: frontal impact
- Knee airbag: frontal impact
- Side airbag: side impact
- Window airbag: side impact, rollover, frontal impact

The front passenger airbag can only be deployed in an accident if the PASSENGER AIR BAG OFF indicator lamp is off. If the front passenger seat

is occupied, make sure, both before and during the journey, that the status of the front passenger airbag is correct (→ page 46).

⚠ WARNING Rick of burns from hot airbag components

The airbag parts are hot after an airbag has been deployed.

- ▶ Do not touch the airbag parts.
- ▶ Have a deployed airbag replaced at a qualified specialist workshop as soon as possible.

Mercedes-Benz recommends that you have the vehicle towed to a qualified specialist workshop after an accident. Take this into account, particularly if a seat belt tensioner is triggered or an airbag deployed.

If the seat belt tensioners are triggered or an airbag is deployed, you will hear a bang, and a small amount of powder may also be released:

- The bang will not generally affect your hearing.
- In general, the powder released is not hazardous to health but may cause short-term breathing difficulties to persons suffering from asthma or other pulmonary conditions.

  Provided it is safe to do so, leave the vehicle immediately or open the window in order to prevent breathing difficulties.

Seat belts

Protection provided by the seat belt

Always fasten your seat belt correctly before starting a journey. A seat belt can only provide the best level of protection if it is worn correctly.

⚠ WARNING Risk of injury or death due to incorrectly fastened seat belt

If the seat belt is not worn correctly, it cannot perform its intended protective function.

In addition, an incorrectly fastened seat belt can also cause injuries, for example, in the event of an accident or when braking or changing direction suddenly.

- ▶ Always ensure that all vehicle occupants have their seat belts fastened correctly and are sitting properly.

Always observe the instructions about the correct driver's seat position and adjusting the seat (→ page 99).

In order for the correctly worn seat belt to provide the intended level of protection, each vehicle occupant must observe the following information:

- The seat belt must not be twisted and must fit tightly and snugly across the body.
- The seat belt must be routed across the centre of the shoulder and as low down across the hips as possible.
- The shoulder section of the seat belt should not touch your neck nor be routed under your arm or behind your back.
- Avoid wearing bulky clothing, e.g. a winter coat.
- Push the lap belt down as far as possible across your hips and pull tight with the shoul-

der section of the belt. Never route the lap belt across your abdomen.

Pregnant women must also take particular care with this.

- Never route the seat belt across sharp, pointed, abrasive or fragile objects.
- Only one person should use each seat belt at any one time. Never allow babies and children to travel sitting on the lap of another vehicle occupant.
- Never secure objects with a seat belt if the seat belt is also being used by one of the vehicle's occupants. Always observe the instructions for loading the vehicle when securing objects, luggage or loads (→ page 114).

  Also ensure that no objects, e.g. a cushion, are ever placed between a person and the seat.

If children are travelling in the vehicle, be sure to observe the instructions and safety notes on "Children in the vehicle" (→ page 52).

Limitations of the protection provided by the seat belt

⚠ **WARNING** Risk of injury or death due to an incorrect seat position

The seat belt does not offer the intended level of protection if you have not moved the seat backrest to an almost vertical position.

You could slip beneath the seat belt and injure yourself.

▶ Adjust the seat properly before commencing your journey.

▶ Always ensure that the seat backrest is in an almost vertical position and that the shoulder belt is routed across the centre of your shoulder.

⚠ **WARNING** Risk of injury or death when additional restraint systems are not used for persons with a smaller stature

Persons under 1.50 m tall cannot wear the seat belt correctly without a suitable additional restraint system.

▶ Always secure persons under 1.50 m tall in a suitable restraint system.

⚠ **WARNING** Risk of injury or death due to damaged or modified seat belts

Seat belts cannot provide protection in the following situations:

- the seat belt is damaged, has been modified, is extremely dirty, bleached or dyed
- the seat belt buckle is damaged or extremely dirty
- modifications have been made to the seat belt tensioner, seat belt anchorage or seat belt retractor

Seat belts may sustain non-visible damage in an accident, e.g. due to glass splinters.

Modified or damaged seat belts could tear or fail in the event of an accident, for example.

Modified belt tensioners may be deployed unintentionally or not function as intended.

- Never modify the seat belts, seat belt tensioners, seat belt anchorages or seat belt retractors.
- Make sure that the seat belts are not damaged, are not worn and are clean.
- Always have the seat belts checked immediately after an accident at a qualified specialist workshop.

Mercedes-Benz recommends that you use seat belts which have been approved for your vehicle by Mercedes-Benz.

WARNING Risk of injury or death from deployed pyrotechnic seat belt tensioners

Pyrotechnic seat belt tensioners that have been deployed are no longer operational and are unable to perform their intended protective function.

- Therefore, have deployed pyrotechnic seat belt tensioners immediately replaced at a qualified specialist workshop.

Mercedes-Benz recommends that you have the vehicle towed to a qualified specialist workshop after an accident.

NOTE Damage caused by trapping the seat belt

If an unused seat belt is not fully retracted, it may become trapped in the door or in the seat mechanism.

- Always ensure that an unused seat belt is fully retracted.

Fastening seat belts

If the seat belt is pulled quickly or sharply, the seat belt retractor locks. The seat belt strap cannot be pulled out any further.

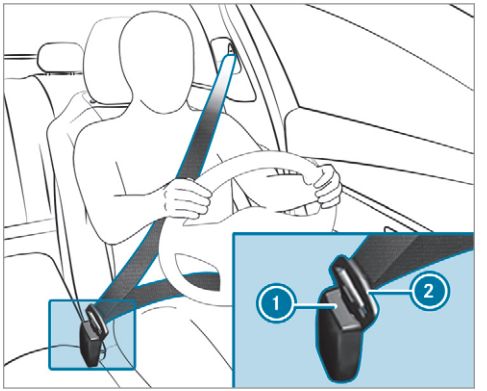

- Always engage seat belt tongue 2 of the seat belt into seat belt buckle 1 of the corresponding seat.

Vehicles with automatic front passenger airbag shutoff:

NOTE Deployment of the seat belt tensioner and side impact airbag when the front passenger seat is unoccupied

If the seat belt tongue is engaged in the seat belt buckle of the unoccupied front passenger seat, the seat belt tensioner and the side impact airbag may also deploy in the event of an accident along with other systems.

- Only one person should use each seat belt at any one time.

Vehicles without automatic front passenger airbag shutoff:

NOTE Deployment of the seat belt tensioner when the front passenger seat is unoccupied

If the seat belt tongue is engaged in the seat belt buckle of the unoccupied front passenger seat, the seat belt tensioner may also deploy in the event of an accident along with other systems.

- Only one person should use each seat belt at any one time.

Seat belt adjustment function

Vehicles with PRE-SAFE®: if the front seat belt is not pulled tightly across your body, the seat belt adjustment may automatically apply a certain tightening force. Do not hold the seat belt tightly while it is adjusting.

You can activate and deactivate the seat belt adjustment function using the multimedia system (→ page 41).

Releasing a seat belt

- Press the release button in the seat belt buckle and guide the seat belt back with the seat belt tongue.

Activating/deactivating seat belt adjustment via the multimedia system

Multimedia system:

→ ⌂ ▸▸ Settings ▸▸ Vehicle

- Activate or deactivate Belt adjustment.

Seat belt warning function for the driver and front passenger

The seat belt warning lamp in the instrument display is a reminder that all vehicle occupants must wear their seat belts correctly.

In addition, a warning tone may sound.

As soon as the driver and front passenger fasten their seat belts, the seat belt warning goes out.

Function of the rear seat belt status display

The rear seat belt status display is only available for certain countries.

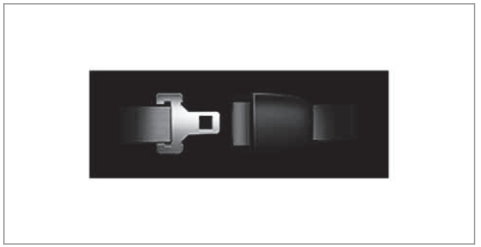

When the ignition is switched on, the rear seat belt status display informs you for a certain amount of time which rear seat belt is not fastened.

You can immediately dismiss the rear seat belt status display using the back button on the left-hand side of the steering wheel (→ page 266).

If a vehicle occupant unfastens a seat belt in the rear while the vehicle is motion, the rear seat belt status display appears again.

In addition, a warning tone may sound. In this case, the rear seat belt status display cannot be hidden using the back button on the left-hand side of the steering wheel.

Airbags

Overview of airbags

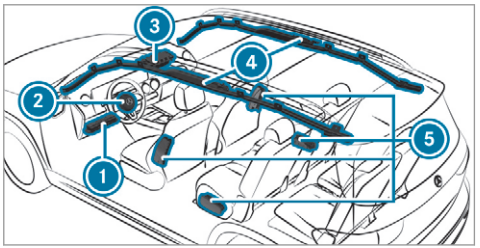

1. Knee airbag
2. Driver's airbag
3. Front passenger airbag
4. Window airbag
5. Side airbag

The installation location of an airbag is identified by the AIRBAG symbol.

When enabled, an airbag can provide additional protection for the respective vehicle occupant.

Potential protection provided by each airbag:

- Knee airbag: thigh, knee and lower leg
- Driver's airbag, front passenger airbag: head and ribcage
- Window airbag: head
- Side airbag: ribcage and pelvis

⚠ WARNING Risk of injury or fatal injuries if the front passenger airbag is enabled

If the front passenger airbag is enabled, a child on the front passenger seat may be struck by the front passenger airbag during an accident.

NEVER use a rearward facing child restraint system on a seat protected by an ENABLED FRONT AIRBAG in front of it, this can result in DEATH or SERIOUS INJURY to the child.

When fitting a child restraint system to the front passenger seat, observe the vehicle-specific information (→ page 69). Also, always observe the notes on rearward-facing or forward-facing child restraint systems on the front passenger seat.

Information on automatic front passenger airbag shutoff

The front passenger airbag can only be deployed in an accident if the PASSENGER AIR BAG OFF indicator lamp is off. If the front passenger seat is occupied, make sure, both before and during the journey, that the status of the front passenger airbag is correct (→ page 46).

! NOTE Important points to remember if the front passenger seat is unoccupied

In an accident, the components of the restraint system may deploy unnecessarily on the front passenger side if:

- There are heavy objects on the front passenger seat.
- The seat belt tongue is engaged in the seat belt buckle of the front passenger seat and the front passenger seat is unoccupied.

▶ Stow objects in a suitable place.

▶ Only one person should use each seat belt at any one time.

Depending on the detected accident situation, the window airbag on the front passenger side may deploy. The airbag is deployed regardless of whether the front passenger seat is occupied.

Protection provided by the airbags

Depending on the accident situation, an airbag may supplement the protection provided by a correctly fastened seat belt.

⚠ WARNING Risk of injury or death due to an incorrect seat position

If you deviate from the correct seat position, the airbag cannot perform its intended protective function.

Each vehicle occupant must make sure of the following:

- Fasten seat belts correctly. Pregnant women must take particular care to ensure that the lap belt never lies across the abdomen.
- Adopt the correct seat position and keep as far away as possible from the airbags.
- Observe the following information.

▶ Always make sure that there are no objects between the airbag and vehicle occupant.

To avoid the risks resulting from the deployment of an airbag, each vehicle occupant must observe the following information in particular:

- Before starting your journey, adjust your seat correctly; the driver's seat and front passenger seat should be moved as far back as possible.

  When doing so, always observe the information on the correct driver's seat position (→ page 99).
- Only hold the steering wheel by the steering wheel rim. This allows the airbag to be fully deployed.
- Always lean against the seat backrest when the vehicle is in motion. Do not lean forwards or against the door or side window. You may

otherwise be in the deployment area of the airbags.

- Always keep your feet on the floor. Do not put your feet on the cockpit, for example. Your feet may otherwise be in the deployment area of the airbag.
- If children are travelling in the vehicle, observe the additional notes (→ page 52).
- Always stow and secure objects correctly.

Objects in the vehicle interior may prevent an airbag from functioning correctly. Each vehicle occupant must always make sure of the following in particular:

- There are no people, animals or objects between the vehicle occupants and an airbag.
- There are no objects between the seat, door and door pillar (B-pillar).
- There are no hard objects, e.g. coat hangers, hanging on the grab handles or coat hooks.
- There are no accessory parts, such as mobile navigation devices, mobile phones or cup holders, attached to the vehicle within the deployment area of an airbag, e.g. on the cockpit, on the door, on the side window or on the side wall trim.

  In addition, no connecting cables, tensioning straps or retaining straps must be routed or attached to the vehicle within the deployment area of an airbag. Always comply with the accessory manufacturer's installation instructions and, in particular, the notes on suitable places for installation.
- There are no heavy, sharp-edged or fragile objects in the pockets of your clothing. Store such objects in a suitable place.

Limited protection provided by airbags

⚠ WARNING Risk of injury due to modifications to the cover of an airbag

If you modify the cover of an airbag or affix objects such as stickers to it, the airbag may no longer function correctly.

▶ Never modify the cover of an airbag and do not affix objects to it.

The installation location of an airbag is identified by the AIRBAG symbol (→ page 42).

⚠ WARNING Risk of injury or death due to the use of unsuitable seat covers

Due to unsuitable seat covers, the airbags cannot protect vehicle occupants as intended.

In addition, the operation of the automatic front passenger airbag shutoff could be restricted.

▶ You should only use seat covers that have been approved for the corresponding seats by Mercedes-Benz.

⚠ WARNING Risk of injury due to malfunctioning sensors in the door

The function of the airbags can be impaired due to modifications or incorrect work performed on the doors or door trim, or if the doors are damaged.

▶ Never modify the doors or parts of the doors.

- Always have work on the doors or door trim carried out at a qualified specialist workshop.

⚠ WARNING Risk of injury due to deployed airbag

A deployed airbag no longer offers any protection.

- Have the vehicle towed to a qualified specialist workshop in order to have the deployed airbag replaced.

Have deployed airbags replaced immediately.

Status of the front passenger front airbag

Function of the automatic front passenger airbag shutoff

The automatic front passenger airbag shutoff is able to detect whether the front passenger seat is occupied by a person or a child restraint system. The front passenger airbag is enabled or disabled accordingly.

When fitting a child restraint system to the front passenger seat, always make sure of the following:

- Ensure that the child restraint system is positioned correctly (→ page 56).
- Always comply with the child restraint system manufacturer's installation instructions.
- Never place objects (e.g. cushions) under or behind the child restraint system.
- Fully retract the seat cushion length adjustment.
- The entire base of the child restraint system must always rest on the sitting surface of the front passenger seat.
- The backrest of the forward-facing child restraint system must, as far as possible, be resting on the seat backrest of the front passenger seat.
- The child restraint system must not touch the roof or be put under strain by the head restraints. Adjust the seat backrest inclination and the head restraint setting accordingly.

⚠ WARNING Risk of injury or death due to objects between the seat surface and the child restraint system

Objects between the sitting surface and the child restraint system could affect the function of the automatic front passenger airbag shutoff.

- Do not place any objects between the sitting surface and the child restraint system.
- The entire base of the child restraint system must always rest on the sitting surface of the front passenger seat.
- The backrest of the forward-facing child restraint system must, as far as possible, be resting on the seat backrest of the front passenger seat.
- Always comply with the child restraint system manufacturer's installation instructions.

A person on the front passenger seat must observe the following information:

- Fasten seat belts correctly (→ page 38).
- Sit in an almost upright seat position with their back against the seat backrest.
- Sit with their feet resting on the floor, if possible.

The front passenger airbag may otherwise be disabled by mistake, for example, in the following situations:

- The front passenger transfers their weight by supporting themselves on a vehicle armrest.
- The front passenger sits in such a way that their weight is raised from the sitting surface.

⚠ **WARNING** Risk of injury or death due to a disabled front passenger airbag

The front passenger airbag is disabled when the PASSENGER AIR BAG OFF indicator lamp is lit.

A person in the front passenger seat could then, for example, come into contact with the vehicle interior, especially if the person is sitting too close to the cockpit.

If the front passenger seat is occupied, always ensure that:

- the classification of the person in the front passenger seat is correct and the front passenger airbag is enabled or disabled in accordance with the person in the front passenger seat.
- the front passenger seat has been moved as far back as possible.
- the person is seated correctly.

▶ Both before and during the journey, ensure that the status of the front passenger airbag is correct.

If the front passenger seat is occupied, the classification of the person or child restraint system on the front passenger seat takes place after the front passenger airbag shutoff self-test. The PASSENGER AIR BAG indicator lamps display the status of the front passenger airbag.

Always observe the notes on the function of the PASSENGER AIR BAG indicator lamps (→ page 46).

Function of the PASSENGER AIR BAG indicator lamps

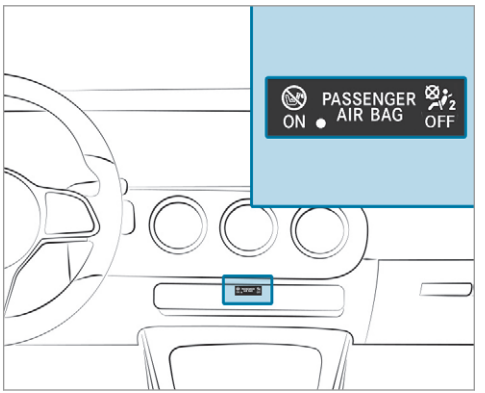

Vehicles without automatic front passenger airbag shutoff have a special sticker affixed to the

side of the cockpit on the front passenger side (→ page 68).

Self-test of automatic front passenger airbag shutoff

When the ignition is switched on, a self-test is performed during which the two PASSENGER AIR BAG ON and OFF indicator lamps light up simultaneously.

The status of the front passenger airbag is displayed via the PASSENGER AIR BAG indicator lamps after the self-test:

- **ON is lit:** the front passenger airbag may deploy during an accident.

  The indicator lamp goes out after approximately 60 seconds.
- **ON and OFF are not lit:** the front passenger airbag may deploy during an accident.
- **OFF is lit:** the front passenger airbag is disabled. It will then not be deployed in the event of an accident.

If the PASSENGER AIR BAG ON indicator lamp is off, only the PASSENGER AIR BAG OFF indicator lamp shows the status of the front passenger airbag. The PASSENGER AIR BAG OFF indicator lamp may be lit continuously or be off.

If the PASSENGER AIR BAG OFF indicator lamp and the restraint system warning lamp light up simultaneously, the front passenger seat may not be used. Also in this case, do not fit a child restraint system to the front passenger seat. Have the automatic front passenger airbag shutoff checked and repaired immediately at a qualified specialist workshop.

Status display

If the front passenger seat is occupied, ensure, both before and during the journey, that the status of the front passenger airbag is correct for the current situation.

After fitting a rearward-facing child restraint system to the front passenger seat: PASSENGER AIR BAG OFF must be lit continuously.

⚠ WARNING Risk of injury or death when using a rearward-facing child restraint system while the front passenger airbag is enabled

If you secure a child in a rearward-facing child restraint system on the front passenger seat and the PASSENGER AIR BAG OFF indicator lamp is off, the front passenger airbag can deploy in the event of an accident.

The child could be struck by the airbag.

Always ensure that the front passenger airbag is disabled. The PASSENGER AIR BAG OFF indicator lamp must be lit.

NEVER use a rearward-facing child restraint system on a seat with an ENABLED FRONT AIRBAG; DEATH or SERIOUS INJURY to the CHILD can occur.

When fitting a child restraint system to the front passenger seat, observe the vehicle-specific information (→ page 69).

Depending on the child restraint system and the stature of the child, the PASSENGER AIR BAG OFF indicator lamp may be off. In this case, do

not fit the rearward-facing child restraint system to the front passenger seat.

Instead, fit the rearward-facing child restraint system to a suitable rear seat.

After fitting a forward-facing child restraint system to the front passenger seat: depending on the child restraint system and the stature of the child, PASSENGER AIR BAG OFF may be lit continuously or be off. Always observe the following information.

⚠ **WARNING** Risk of injury or death due to incorrect positioning of the forward-facing child restraint system

If you secure a child in a forward-facing child restraint system on the front passenger seat that is positioned too close to the cockpit, in the event of an accident, the child could:

- come into contact with parts of the vehicle's interior if the PASSENGER AIR BAG OFF indicator lamp is lit, for example
- be struck by the airbag if the PASSENGER AIR BAG OFF indicator lamp is off

▶ Always move the front passenger seat as far back as possible and fully retract the seat cushion length adjustment. While doing so, always make sure that the shoulder belt strap is correctly routed from the seat belt outlet of the vehicle to the shoulder belt guide on the child restraint system. The shoulder belt strap must be routed forwards and downwards from the seat belt outlet. If necessary, adjust the front passenger seat accordingly.

▶ Always comply with the child restraint system manufacturer's installation instructions.

When fitting a child restraint system to the front passenger seat, observe the vehicle-specific information (→ page 69).

If a person is sitting on the front passenger seat: PASSENGER AIR BAG OFF may be lit continuously or be off, depending on the person's stature.

A person on the front passenger seat must always observe the following information:

- If the front passenger seat is occupied by an adult or a person with a stature corresponding to that of an adult, the PASSENGER AIR BAG OFF indicator lamp must be off. This indicates that the front passenger airbag is enabled.

  If the PASSENGER AIR BAG OFF indicator lamp is lit continuously, an adult or person with a build corresponding to that of an adult should not use the front passenger seat.

  Instead, they should use a rear seat.
- If the front passenger seat is occupied by a person of smaller stature (e.g. a teenager or small adult), the PASSENGER AIR BAG OFF indicator lamp either lights up continuously or remains off, depending on the classification.
  - If the PASSENGER AIR BAG OFF indicator lamp is off: move the front passenger seat as far back as possible, or the person of smaller stature should use a rear seat.

- If the PASSENGER AIR BAG OFF indicator lamp is lit continuously: the person of smaller stature should not use the front passenger seat.

⚠ **WARNING** Risk of injury or death when the PASSENGER AIR BAG OFF indicator lamp is lit

If the PASSENGER AIR BAG OFF indicator lamp remains lit after the self-test, the co-driver airbag is disabled.

If the co-driver seat is occupied, always ensure that:

- The classification of the person in the co-driver seat is correct, and the co-driver airbag is enabled or disabled as is appropriate for the person in the co-driver seat.
- The person is seated properly with a correctly fastened seat belt.

Be sure to also observe the following further related subjects:

- Securing the child restraint system on the front passenger seat (→ page 69)
- Suitable positioning of the child restraint system (→ page 56)

PRE-SAFE® system

PRE-SAFE® (anticipatory occupant protection)

PRE-SAFE® is able to detect certain critical driving situations and implement pre-emptive measures to protect the vehicle occupants.

PRE-SAFE® can implement the following measures independently of each other:

- Tightening the seat belts on the driver's seat and front passenger seat.
- Closing the side windows.
- **Vehicles with sliding sunroof:** close the sliding sunroof.
- **Vehicles with memory function:** move the front passenger seat to a more favourable seat position.
- PRE-SAFE® Sound: provided that the multimedia system is switched on, generates a brief noise signal to stimulate the innate protective mechanism of a person's hearing.

! **NOTE** Damage caused by objects in the footwell or behind the seat

The automatic adjustment of the seat position may result in damage to the seat and/or the object.

▶ Stow objects in a suitable place.

Reversing the PRE-SAFE® system measures

If an accident did not occur, the pre-emptive measures that were taken are reversed.

You will need to perform certain settings yourself.

▶ If the seat belt pre-tensioning is not reduced, move the seat backrest back slightly. The locking mechanism releases.

Function of PRE-SAFE® PLUS (anticipatory occupant protection plus)

PRE-SAFE® PLUS can detect certain impacts, particularly an imminent rear impact, and take pre-emptive measures to protect the vehicle occupants. These measures cannot necessarily prevent an imminent impact.

PRE-SAFE® PLUS can implement the following measures independently of each other:

- Tightening the seat belts on the driver's seat and front passenger seat.
- Activating the rear hazard warning lights at a higher flashing frequency.
- Increasing brake pressure when the vehicle is stationary. This brake application is cancelled automatically when the vehicle pulls away.

If an accident did not occur, the pre-emptive measures that were taken are reversed.

System limits

The system will not initiate any action in the following situations:

- when reversing

  or

- when the vehicle is towing a trailer and there is a risk of a rear impact

The system will not initiate any braking application in the following situations:

- whilst driving

  or

- when entering or exiting a parking space while using Active Parking Assist

Automatic measures after an accident

Depending on the type and severity of the accident, and depending on the vehicle's equipment, the following measures can be implemented, for example:

- automatic braking (post-collision brake)
- activating the hazard warning lights
- triggering an automatic emergency call (→ page 303)
- switching off the engine

  To restart the vehicle, switch the ignition off and switch it back on (→ page 168). Depending on the type and severity of the accident, it is possible that the vehicle can no longer be started.
- switching off the fuel supply
- unlocking the vehicle doors
- lowering the side windows
- displaying the emergency guide in the multimedia system display
- switching on the interior lighting

Function of the post-collision brake

Depending on the accident situation, the post-collision brake can minimise the severity of a further collision or even avoid it.

If an accident is detected, the post-collision brake can implement automatic braking. When the vehicle has come to a standstill, the electric parking brake is automatically applied.

The driver can cancel automatic braking by taking the following actions:

- braking more strongly than automatic braking
- fully depressing the accelerator pedal with force

Safely transporting children in the vehicle

Always observe when children are travelling in the vehicle

ⓘ Also strictly observe the safety notes for the specific situation. In this way you can recognise potential risks and avoid dangers if children are travelling in the vehicle (→ page 52).

Be diligent

Bear in mind that negligence when securing the child in the child restraint system may have serious consequences. Always be diligent in securing a child carefully before every journey.

To improve protection for children younger than twelve years old or under 1.50 m in height, Mercedes-Benz recommends you observe the following information:

- Always secure the child in a child restraint system suitable for this Mercedes-Benz vehicle.
- The child restraint system must be appropriate to the age, weight and size of the child.
- The vehicle seat must be suitable for fitting a child restraint system (→ page 56).

Accident statistics show that children secured on the rear seats are generally safer than children secured on the front seats. For this reason, Mercedes-Benz strongly advises that you fit a child restraint system to a rear seat.

The generic term child restraint system

The generic term child restraint system is used in this Owner's Manual. A child restraint system is, for example:

- a baby car seat
- a rearward-facing child seat
- a forward-facing child seat
- a child booster seat with a backrest and seat belt guide

  Mercedes-Benz recommends using a child booster seat with a backrest.

The child restraint system must be appropriate to the age, weight and size of the child.

Observe laws and legal requirements

Always observe the legal requirements when using a child restraint system in the vehicle.

Make sure that the child restraint system is approved in accordance with the valid test specifications and guidelines. Further information can be obtained at a qualified specialist workshop. Mercedes-Benz recommends that you use a Mercedes-Benz Service Centre for this purpose.

Only use approved child restraint systems

Only child restraint systems that meet the following UNECE standards are permitted for use in the vehicle:

- UN-R44
- UN-R129 (i-Size child restraint systems)

Information on child restraint system approval categories and details on the approval label on the child restraint system (→ page 56).

Detecting risks, avoiding danger

Securing systems for child restraint systems in the vehicle

Only use the following securing systems for child restraint systems:

- the ISOFIX or i-Size mounting brackets
- the vehicle's seat belt system
- the Top Tether anchorages

Fitting an ISOFIX or an i-Size child restraint system is preferred.

Simply attaching to the securing rings on the vehicle can reduce the risk of fitting the child restraint system incorrectly.

When securing a child with the integrated seat belt of the ISOFIX or i-Size child restraint system, always comply with the permissible gross weight for the child and child restraint system (→ page 60).

Advantage of a rearward-facing child restraint system

It is preferable to transport a baby or a small child in a suitable rearward-facing child restraint system. In this case, the child sits in the opposite direction to the direction of travel and faces backwards.

Babies and small children have comparatively weak neck muscles in relation to the size and weight of their head. The risk of injury to the cervical spine during an accident can be reduced in a rearward-facing child restraint system.

Always secure a child restraint system correctly

⚠ **WARNING** Risk of injury or death due to incorrect installation of the child restraint system

The child can then not be protected or restrained as intended.

- ▶ Be sure to comply with the manufacturer's installation instructions for the child restraint system and its correct use.
- ▶ Make sure that the entire base of the child restraint system always rests on the sitting surface of the seat.
- ▶ Never place objects (e.g. cushions) under or behind the child restraint system.
- ▶ Use child restraint systems only with the original cover designed for them.
- ▶ Always replace damaged covers with genuine covers.

⚠ **WARNING** Risk of injury or death due to unsecured child restraint systems in the vehicle

If the child restraint system is incorrectly fitted or not secured, it can come loose.

The child restraint system could be flung around and hit vehicle occupants.

- ▶ Always install child restraint systems correctly, even when not in use.

▶ Always comply with the child restraint system manufacturer's installation instructions.

- Always observe the child restraint system manufacturer's installation and operating instructions as well as the vehicle-specific information:
  - Fitting the ISOFIX or i-Size child restraint system to the rear seat (→ page 60).
  - Securing the child restraint system with the seat belt on the rear seat (→ page 67).
  - Securing the child restraint system with the seat belt on the front passenger seat (→ page 69). Observe the specific instructions for the rearward-facing and forward-facing child restraint systems (→ page 69).

    If the front passenger seat is occupied, ensure, both before and during the journey, that the status of the front passenger airbag is correct for the current situation (→ page 46).
- Observe the warning labels in the vehicle interior and on the child restraint system.
- Also secure Top Tether if present.

Do not alter the child restraint system

⚠ **WARNING** Risk of injury due to modifications to the child restraint system

The child restraint system can no longer function properly. This poses an increased risk of injury.

▶ Never modify a child restraint system.

▶ Only affix accessories which have been specially approved for this child restraint system by the child restraint system's manufacturer.

Mercedes-Benz recommends Mercedes-Benz care products for cleaning child restraint systems recommended by Mercedes-Benz.

Only use child restraint systems which are in proper working condition

⚠ **WARNING** Risk of injury or death caused by the use of damaged child restraint systems

Child restraint systems or their retaining systems that have been subjected to stress in an accident may not be able to perform their intended protective function.

It may be the case that the child cannot be properly restrained.

▶ Always immediately replace child restraint systems that have been damaged or involved in an accident.

▶ Have the securing systems for the child restraint systems checked at a qualified specialist workshop before installing a child restraint system again.

Avoid direct sunlight

⚠ WARNING Risk of burns when the child seat is exposed to direct sunlight

If the child restraint system is exposed to direct sunlight or heat, parts could heat up.

Children could suffer burns from these parts, particularly on the metallic parts of the child restraint system.

- ▶ Always make sure that the child restraint system is not exposed to direct sunlight.
- ▶ Protect the child restraint system with a blanket, for example.
- ▶ If the child restraint system has been exposed to direct sunlight, allow it to cool before securing a child into it.
- ▶ Never leave children unattended in the vehicle.

Observe when stopping or parking

⚠ WARNING Risk of accident and injury due to children left unattended in the vehicle

If children are left unsupervised in the vehicle, they could, in particular:

- open doors, thereby endangering other persons or road users.
- get out and be struck by oncoming traffic.
- operate vehicle equipment and become trapped, for example.

In addition, the children could also set the vehicle in motion, for example by:

- releasing the parking brake.
- change the transmission position.
- start the vehicle.

- ▶ Never leave children unattended in the vehicle.
- ▶ When leaving the vehicle, always take the key with you and lock the vehicle.
- ▶ Keep the key out of reach of children.

This also applies to the Digital Vehicle Key if the "Digital Vehicle Key" function is activated via Mercedes me connect.

⚠ WARNING Risk of fatal injury due to exposure to extreme heat or cold in the vehicle

If people –particularly children – are exposed to extreme temperatures over an extended period of time, there is a risk of serious or even fatal injury!

- ▶ Never leave anyone – particularly children – unattended in the vehicle.
- ▶ Never leave animals in the vehicle unattended.

Overview of recommended child restraint systems

ⓘ Further information on the correct child restraint system can be obtained at a qualified specialist workshop. Mercedes-Benz recommends that you use a Mercedes-Benz Service Centre for this purpose.

Securing with ISOFIX

Category 0+ (up to 13 kg and approx. 15 months)

Type[1]	BABY SAFE plus
Size category	E
Approval	E1 04 301 146
Order number[2]	B6 6 86 8224
1 Manufacturer: Britax Römer.	2 With colour code 9H95.

Category I (9 to 18 kg and between approx. 9 months and 4 years

Type[1]	DUO plus
Size category	B1
Approval	E1 04 301 133
Order number[2]	A 000 970 43 02
1 Manufacturer: Britax Römer.	2 With colour code 9H95.

Securing with the vehicle seat belt

Category 0 (up to 10 kg and approx. 6 months) and category 0+ (up to 13 kg and approx. 15 months)

Type[1]	BABY SAFE plus II
Approval	E1 04 301 146
Order number[2]	A 000 970 38 02
1 Manufacturer: Britax Römer.	2 With colour code 9H95.

Category I (9 to 18 kg and from approximately 9 months to 4 years)

Type[1]	DUO plus
Approval	E1 04 301 133
Order number[2]	A 000 970 43 02
1 Manufacturer: Britax Römer.	2 With colour code 9H95.

Category II/III (15 to 36 kg and from approximately 4 to 12 years)

Type[1]	KIDFIX XP
Approval	E1 04 301 304
Order number[2]	A 000 970 49 02
Type[1]	**AMG KIDFIX XP**
Approval	E1 04 301 304
Order number[2]	A 000 970 33 02
1 Manufacturer: Britax Römer.	2 With colour code 9H95.

Overview of suitable seats in the vehicle for fitting a child restraint system

Left/right rear seat

Second row of seats, preferred securing system:

- ISOFIX child seat securing system (→ page 58)

  or

- i-Size child seat securing system (→ page 60)
- Also secure Top Tether if present (→ page 63)

Third row of seats, preferred securing system:

- ISOFIX child seat securing system (→ page 58)
- Also secure Top Tether if present (→ page 63)

Left/right rear seat (second and third seat row) – alternative securing system:

- Vehicle seat belt (→ page 65)

Front passenger seat

Securing system:

- Vehicle seat belt (→ page 65)

Be sure to observe:

- If the front passenger seat is occupied, ensure, both before and during the journey, that the status of the front passenger airbag is correct for the current situation (→ page 46).
- Observe the notes on automatic front passenger airbag shutoff (→ page 45)

Centre rear seat

Centre rear seat (second seat row) – securing system:

- Vehicle seat belt (→ page 65)

Approval categories for child restraint systems

Only use approved child restraint systems

Only child restraint systems that meet the following UNECE standards are permitted for use in the vehicle:

- UN-R44
- UN-R129 (i-Size child restraint systems)

Identification on the child restraint system

Information about the approval category, weight category and approval number, for example, is on the approval label on the child restraint system.

There may be further information such as the ISOFIX size categories, depending on the approval category of the child restraint system.

Approval categories in accordance with UN-R44

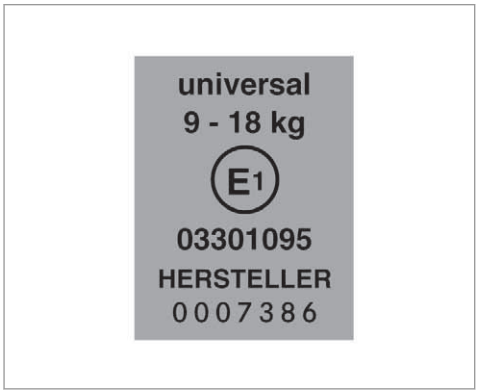

Example of an approval label

- **Universal:** child restraint systems in the "Universal" category are approved for installation in vehicles. They can be used, in accordance with overviews of the suitability of seats for securing child restraint systems, on seats labelled U, UF or IUF.

  The identification IUF refers to ISOFIX child restraint systems in the "Universal" category. These child restraint systems must also be secured using Top Tether or support points.
- **Semi-Universal:** child restraint systems in the "Semi-Universal" category may only be used if the vehicle and vehicle seat are listed in the child restraint system manufacturer's vehicle model list.
- **Vehicle-specific:** child restraint systems in the "vehicle-specific" category may only be used if the vehicle and vehicle seat are listed in the child restraint system manufacturer's vehicle model list.

Approval categories in accordance with UN-R129

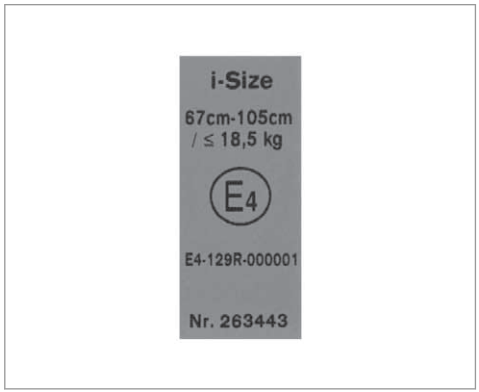

Example of an approval label

- **i-Size:** child restraint systems in the "i-Size" category are approved for installation in vehicles with i-Size mounting brackets. They can be used, in accordance with overviews of the

suitability of seats for securing child restraint systems, on seats labelled i-U.

The identification i-U refers to i-Size child restraint systems in the "Universal" category. These child restraint systems must also be secured using Top Tether or support points.

Observe the suitability of vehicle seats

Depending on the approval category, there are forward-facing and rearward-facing child restraint systems. Their use can be restricted for certain vehicle seats:

- Suitability of seats for securing ISOFIX child restraint systems (→ page 58).
- Suitability of seats for securing i-Size child restraint systems (→ page 60).
- Suitability of seats for attaching belt-secured child restraint systems (→ page 65).

Fitting an ISOFIX or i-Size child restraint system on the rear seat

Overview of suitability of the seats for attaching ISOFIX child restraint systems

ISOFIX is a standardised securing system for specially designed restraint systems.

The symbol indicates seats suitable for attaching an ISOFIX child restraint system in accordance with UN R44 (→ page 56).

Attach only child restraint systems that are approved in accordance with UN R44 as per the following ISOFIX tables.

Carry cot for second and third rows of seats

Size class – Equipment	Left/right rear seat
F – ISO/L1	X
G – ISO/L2	X

X Not suitable for an ISOFIX child restraint system in this weight group and/or size class.

Weight group 0 (up to 10 kg and up to approx. 6 months) for second and third rows of seats

Size class – Equipment	Left/right rear seat
E – ISO/R1	IL

IL Suitable for ISOFIX child restraint systems according to the table in "Overview of the recommended child restraint systems", or if the vehicle and the seat are listed on the child restraint system manufacturer's vehicle model list.

Weight group 0+ (up to 13 kg and up to approx. 15 months) for second row of seats

Size class – Equipment	Left/right rear seat
E – ISO/R1	IL
D – ISO/R2, ISO/R2X	IL

Size class – Equipment	Left/right rear seat
C – ISO/R3	IL (1)

IL Suitable for ISOFIX child restraint systems according to the table in "Overview of the recommended child restraint systems", or if the vehicle and the seat are listed on the child restraint system manufacturer's vehicle model list.

(1) When using a child restraint system of size class (ISO/R3), move the front seat into the highest position. Make sure that the seat backrest of the front seat does not rest against the child restraint system.

Weight group 0+ (up to 13 kg and up to approx. 15 months) for third row of seats

Size class – Equipment	Left/right rear seat
E – ISO/R1	IL
D – ISO/R2, ISO/R2X	X

Size class – Equipment	Left/right rear seat
C – ISO/R3	X

IL Suitable for ISOFIX child restraint systems according to the table in "Overview of the recommended child restraint systems", or if the vehicle and the seat are listed on the child restraint system manufacturer's vehicle model list.

X Not suitable for an ISOFIX child restraint system in this weight group and/or size class.

Weight group 1 (9–18 kg and approx. 9 months to 4 years) for second row of seats

Size class – Equipment	Left/right rear seat
D – ISO/R2, ISO/R2X	IL
C – ISO/R3	IL (1)
B – ISO/F2	IUF
B1 – ISO/F2X	IUF

Size class – Equipment	Left/right rear seat
A – ISO/F3	IUF

IL Suitable for ISOFIX child restraint systems according to the table in "Overview of the recommended child restraint systems", or if the vehicle and the seat are listed on the child restraint system manufacturer's vehicle model list.

IUF Suitable for forward-facing ISOFIX child restraint systems of the "Universal" category in this weight group.

(1) When using a child restraint system of size class (ISO/R3), move the front seat into the highest position. Make sure that the seat backrest of the front seat does not rest against the child restraint system.

Weight group 1 (9–18 kg and approx. 9 months to 4 years) for third row of seats)

Size class – Equipment	Left/right rear seat
D – ISO/R2, ISO/R2X	X
C – ISO/R3	X
B – ISO/F2	IUF
B1 – ISO/F2X	IUF
A – ISO/F3	IUF

X Not suitable for an ISOFIX child restraint system in this weight group and/or size class.

IUF Suitable for forward-facing ISOFIX child restraint systems of the "Universal" category in this weight group.

Overview of suitability of the seats for attaching i-Size child restraint systems

i-Size is a standardised securing system for specially designed restraint systems.

The symbol indicates seats suitable for attaching an i-Size child restraint system in accordance with UN R129 (→ page 56).

Child restraint systems that are permitted in accordance with UN R44 as per the ISOFIX tables (→ page 58) or UN R129 as per the following i-Size tables may be attached.

i-Size child restraint systems (ISO/R2, ISO/F2X, ISO/B2, ISO/B3)

Front passenger seat	Left/right rear seat (second row of seats only)
X	i-U
X Not suitable for an i-Size child restraint system in the "Universal" category.	i-U Suitable for forward-facing and rearward-facing i-Size child restraint systems in the "Universal" category.

Fitting an ISOFIX or i-Size child restraint system on the rear seat

⚠ **WARNING** Risk of accident if the rear bench seat, rear seat and seat backrest are not engaged

The rear bench seat, rear seat and seat backrest may fold forwards, even while the vehicle is in motion.

- As a result, the vehicle occupant will be pressed into the seat belt with increased force. The seat belt will not be able to protect as intended and could cause additional injury.
- Objects or loads in the boot or load compartment cannot be restrained by the seat backrest.

▶ Make sure that the rear bench seat, the rear seat and the seat backrest are engaged before every trip.

Ensure that the rear seat backrest is engaged. To do so, pull forcefully on the seat backrest.

⚠ **WARNING** Risk of injury or death if the permissible gross mass of the child and child restraint system is exceeded.

Too much load may be placed on the ISOFIX or i-Size child restraint systems and the child may not be restrained correctly in the event of an accident, for example.

▶ If the child and the child restraint system together weigh more than 33 kg, use only an ISOFIX or i-Size child restraint system that secures the child using the vehicle seat belt.

▶ Also secure the child restraint system with the Top Tether belt, if available.

Always comply with the information about the mass of the child restraint system:

- in the manufacturer's installation and operating instructions for the child restraint system used
- on a label on the child restraint system, if present

Regularly check that the permissible gross mass of the child and child restraint system is still complied with.

When fitting a child restraint system, observe the following:

☑ Always observe the correct use of the seats and consider their suitability for attaching a child restraint system.

ISOFIX child seat securing system (→ page 58)

or

i-Size child seat securing system (→ page 60)

☑ Always comply with the manufacturer's installation and operating instructions for the child restraint system used.

☑ Make sure that the child's feet do not touch the front seat. If necessary, move the front seat slightly forwards.

When fitting an ISOFIX child restraint system, also observe the following:

☑ **When using a Group 0/0+ baby car seat and a Group 1 rearward-facing child restraint system on a rear seat:** adjust the front seat so that the seat does not touch the child restraint system.

☑ **When using a Group 1 forward-facing child restraint system:** remove the head restraint from the respective seat, if possible. In addition, the backrest of the child restraint system must lie as flat as possible against the backrest of the vehicle seat.

After the child restraint system has been removed, replace the head restraint immediately and adjust all head restraints correctly.

☑ **When using a child restraint system on a seat on the third row of seats:** adjust the front seat so that it does not touch the child restraint system and move the seat backrest of the front seat into an upright position if necessary.

☑ For certain child restraint systems in weight group 2 or 3, there may be restrictions on the maximum size setting, e.g. due to possible contact with the roof.

☑ The child restraint system must not be installed between the roof and the seat cushion and/or be fitted facing the wrong direction. Where possible, adjust the seat cushion inclination accordingly.

☑ The child restraint system must not be put under strain by the head restraint. Adjust the head restraints accordingly.

When fitting an i-Size child restraint system, also observe the following:

☑ **When using a rearward-facing child restraint system:** adjust the front seat so that it does not touch the child restraint system.

☑ **When using a forward-facing child restraint system:** remove the head restraint from the respective seat, if possible. In addition, the backrest of the child restraint system must lie as flat as possible against the backrest of the vehicle seat.

After the child restraint system has been removed, replace the head restraint immediately and adjust all head restraints correctly.

▶ Before every journey, make sure that the ISOFIX child restraint system or the i-Size child restraint system is engaged correctly in both mounting brackets in the vehicle.

! **NOTE** Damage to the seat belt for the centre seat during installation of the child restraint system

▶ Make sure that the seat belt is not trapped.

Rear bench seat (second row of seats):

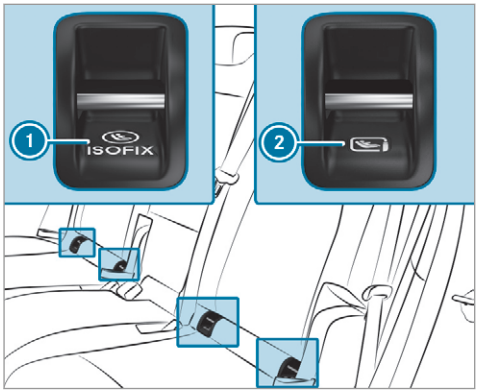

1 ISOFIX mounting bracket
2 i-Size mounting bracket

▶ Attach the ISOFIX or i-Size child restraint system to both mounting brackets in the vehicle.

Vehicles with a third row of seats:

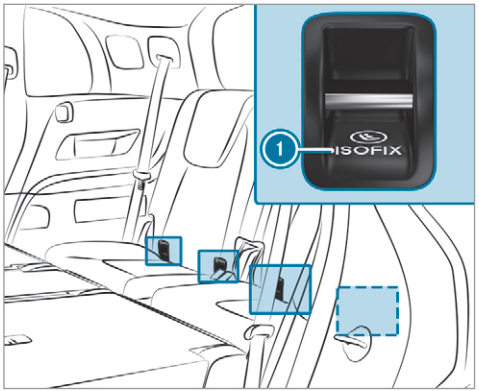

▶ Attach the ISOFIX child restraint system to both ISOFIX mounting brackets 1.

Securing a Top Tether

WARNING Risk of injury or death if the rear seat backrests are not locked after fitting Top Tether belts

The rear seat backrests may fold forwards when driving.

In this case, child restraint systems may no longer perform their intended protective function. Additional injuries may also be caused.

▶ Always lock rear seat backrests after fitting Top Tether belts.

▶ Pay attention to the lock verification indicator.

Ensure that the rear seat backrest is engaged. To do so, pull forcefully on the seat backrest.

If the child restraint system is equipped with a Top Tether belt:

The risk of injury can be reduced by a Top Tether. The Top Tether belt enables an additional connection between the child

restraint system attached with ISOFIX or i-Size and the vehicle.

The Top Tether anchorages for the second row of seats are located on the rear side of the two outer rear seats on the second row of seats. For the third row of seats, use the Top Tether anchorage on the rear side of the seat backrest on the third row of seats.

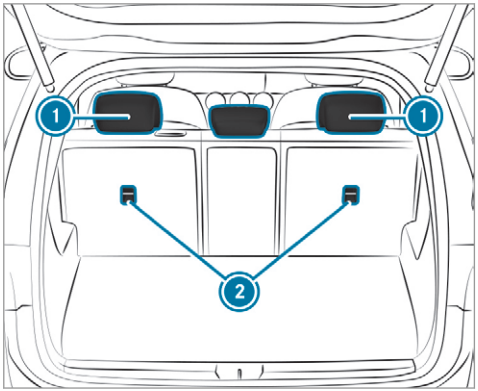

Second row of seats

- If necessary, slide head restraint (1) upwards (→ page 108).
- Fit the ISOFIX or i-Size child restraint system with Top Tether. Comply with the child restraint system manufacturer's installation instructions.

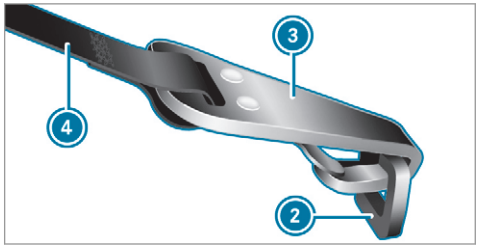

- Guide Top Tether belt (4) under head restraint (1) between the two head restraint bars.
- Hook Top Tether hook (3) into Top Tether anchorage (2) without twisting.
- Tension Top Tether belt (4). Comply with the child restraint system manufacturer's installation instructions.
- If necessary, slide head restraint (1) downwards (→ page 108). Make sure that you do not interfere with the correct routing of Top Tether belt (4).

Securing the child restraint system with the seat belt

Notes on the suitability of seats for attaching belt-secured child restraint systems

Rear seats (second seat row)

Weight category 0: up to 10 kg	
Left/right rear seat	U, L
Centre rear seat[1]	U, L
Weight category 0+: up to 13 kg	
Left/right rear seat	U, L
Centre rear seat[1]	U, L
Weight category I: 9 to 18 kg	
Left/right rear seat	U, L
Centre rear seat[1]	U, L
Weight category II: 15 to 25 kg	
Left/right rear seat	U, L
Centre rear seat[1]	U, L
Weight category III: 22 to 36 kg	
Left/right rear seat	U, L
Centre rear seat[1]	U, L
1 Child restraint systems with a supporting bracket are not suitable for this seat.	
U Suitable for child restraint systems of the "Universal" category in this weight category.	
L Suitable for semi-universal child restraint systems according to the table in "Recommended child restraint systems", or if the vehicle and the seat are listed in the child restraint system manufacturer's vehicle model list.	

Rear seats (third seat row)

Weight category 0: up to 10 kg	
Left/right rear seat	U, L
Weight category 0+: up to 13 kg	
Left/right rear seat	U, L
Weight category I: 9 to 18 kg	
Left/right rear seat	U, L
Weight category II: 15 to 25 kg	
Left/right rear seat	U, L
Weight category III: 22 to 36 kg	
Left/right rear seat	U, L
U Suitable for child restraint systems of the "Universal" category in this weight category.	
L Suitable for semi-universal child restraint systems according to the table in "Recommended child restraint systems", or if the vehicle and the seat are listed in the child restraint system manufacturer's vehicle model list.	

Notes on child restraint systems on the front passenger seat

- If it is absolutely necessary for you to fit a child restraint system to the front passenger seat, be sure to observe the information on child restraint systems on the front passenger seat (→ page 69).
- Observe the specific instructions for the rearward-facing and forward-facing child restraint systems. If the front passenger seat is occupied, ensure, both before and during the journey, that the status of the front passenger airbag is correct for the current situation (→ page 46).

Front passenger seat

Weight category 0: up to 10 kg	
Front passenger airbag enabled[1]	X
Front passenger airbag disabled[1, 2]	U, L
Weight category 0+: up to 13 kg	
Front passenger airbag enabled[1]	X
Front passenger airbag disabled[1, 2]	U, L
Weight category I: 9 to 18 kg	
Front passenger airbag enabled[1]	UF, L
Front passenger airbag disabled[1, 2]	U, L
Weight category II: 15 to 25 kg	
Front passenger airbag enabled[1]	UF, L
Front passenger airbag disabled[1, 2]	U, L
Weight category III: 22 to 36 kg	
Front passenger airbag enabled[1]	UF, L
Front passenger airbag disabled[1, 2]	U, L
1 Adjust the seat cushion inclination so that the front edge of the seat cushion is in the highest position and the rear edge of the seat cushion is in the lowest position.	
2 The vehicle is equipped with automatic front passenger airbag shutoff. The PASSENGER AIR BAG OFF indicator lamp must be lit.	
X Not suitable for children in this weight category.	
U Suitable for child restraint systems of the "Universal" category in this weight category.	
L Suitable for semi-universal child restraint systems according to the table in "Recommended child restraint systems", or if the vehicle and the seat are listed in the child restraint system manufacturer's vehicle model list.	
U Suitable for forward-facing child restraint systems of the "Universal" category in this weight category.	

Securing the child restraint system with the seat belt on the rear seat

⚠ **WARNING** Risk of accident if the rear bench seat, rear seat and seat backrest are not engaged

The rear bench seat, rear seat and seat backrest may fold forwards, even while the vehicle is in motion.

- As a result, the vehicle occupant will be pressed into the seat belt with increased force. The seat belt will not be able to protect as intended and could cause additional injury.
- Objects or loads in the boot or load compartment cannot be restrained by the seat backrest.

▶ Make sure that the rear bench seat, the rear seat and the seat backrest are engaged before every trip.

Ensure that the rear seat backrest is engaged. To do so, pull forcefully on the seat backrest.

When fitting a belt-secured child restraint system, observe the following:

☑ Always comply with the manufacturer's installation and operating instructions for the child restraint system used.

☑ For a child restraint system in the "Universal" or "Semi-Universal" category, make sure that the system has been approved for the vehicle seat.

Observe the notes under "Suitability of seats for attaching belt-secured child restraint systems" (→ page 65).

☑ **When using a category 0/0+ baby car seat and a category I rearward-facing child restraint system on a rear seat:** adjust the front seat so that the seat does not touch the child restraint system.

☑ **When using a category I forward-facing child restraint system:** remove the head restraint from the respective seat, if possible.

After the child restraint system has been removed, replace the head restraint immediately and adjust all head restraints correctly.

☑ The backrest of the forward-facing child restraint system must, as far as possible, be resting on the seat backrest of the rear seat.

☑ For certain child restraint systems in weight category II or III, there may be restrictions on the maximum size setting, e.g. due to possible contact with the roof.

☑ The child restraint system must not be put under strain between the roof and the seat cushion and/or be fitted facing the wrong direction. Where possible, adjust the seat cushion inclination accordingly.

☑ The child restraint system must not be put under strain by the head restraint. Adjust the head restraints accordingly.

☑ Make sure that the child's feet do not touch the front seat. If necessary, move the front seat slightly forwards.

- ▶ Install the child restraint system.
  The entire base of the child restraint system must always rest on the sitting surface of the rear seat.
- ▶ Always make sure that the shoulder belt strap is correctly routed from the seat belt outlet of the vehicle to the shoulder belt guide on the child restraint system.
  The shoulder belt strap must be routed forwards and downwards from the seat belt outlet.

Notes on vehicles without automatic front passenger airbag shutoff



Sticker visible when the front passenger door is open

Vehicles without automatic front passenger airbag shutoff have a special sticker affixed to the side of the cockpit on the front passenger side.

Make sure you observe the following information:

- Never fit a rearward-facing child restraint system to the front passenger seat
- Always fit a rearward-facing child restraint system to a suitable rear seat
  - Suitability of seats for attaching belt-secured child restraint systems (→ page 65).
  - Secure the child restraint system with the seat belt on the rear seat (→ page 67).
- Notes on rearward-facing and forward-facing child restraint systems on the front passenger seat (→ page 69).

Notes on rearward-facing and forward-facing child restraint systems on the front passenger seat

⚠ **WARNING** Risk of injury or death when using a rearward-facing child restraint system while the front passenger airbag is enabled

If you secure a child in a rearward-facing child restraint system on the front passenger seat and the PASSENGER AIR BAG OFF indicator lamp is off, the front passenger airbag can deploy in the event of an accident.

The child could be struck by the airbag.

Always ensure that the front passenger airbag is disabled. The PASSENGER AIR BAG OFF indicator lamp must be lit.

NEVER use a rearward-facing child restraint system on a seat with an ENABLED FRONT AIRBAG; DEATH or SERIOUS INJURY to the CHILD can occur.

Observe the specific instructions for rearward-facing and forward-facing child restraint systems (→ page 69).

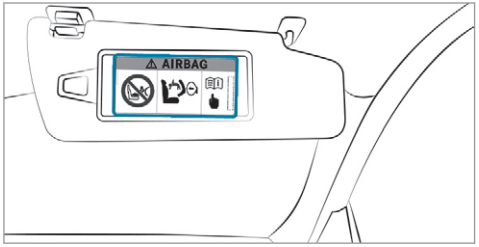

Warning notice on the front passenger sun visor

Always observe the status of the front passenger airbag on the PASSENGER AIR BAG OFF indicator lamp:

- If it is absolutely necessary to fit a child restraint system to the front passenger seat, always observe the information on the automatic front passenger airbag shutoff (→ page 45).
- When using a rearward-facing child restraint system to the front passenger seat, the front passenger airbag must always be disabled. This is only the case if the PASSENGER AIR BAG OFF indicator lamp is lit continuously (→ page 46).
- If the PASSENGER AIR BAG OFF indicator lamp is off, the front passenger airbag is enabled. The front passenger airbag may deploy during an accident.

Securing the child restraint system with the seat belt on the front passenger seat

When fitting a belt-secured child restraint system on the front passenger seat, always observe the following:

☑ Observe the child restraint system manufacturer's installation and operating instructions.

☑ For a child restraint system in the "Universal" or "Semi-Universal" category, make sure that the system has been approved for the vehicle seat.

Observe the notes under "Suitability of seats for attaching belt-secured child restraint systems" (→ page 65).

☑ When using a forward-facing child restraint system in category I: remove the head restraint from the respective seat, if possible.

After the child restraint system has been removed, replace the head restraint immediately and adjust all head restraints correctly.

☑ The backrest of the forward-facing child restraint system must, as far as possible, be resting on the seat backrest of the front passenger seat.

☑ For certain child restraint systems in weight category II or III, there may be restrictions on the maximum size setting, e.g. due to possible contact with the roof.

☑ The child restraint system must not be put under strain between the roof and the seat cushion and/or be fitted facing the wrong direction.

☑ The child restraint system must not be put under strain by the head restraint. Adjust the head restraints accordingly.

☑ Never place objects (e.g. cushions) under or behind the child restraint system.

▶ Set the front passenger seat as far back as possible and move the seat into the highest position if possible.

▶ Adjust the seat cushion inclination so that the front edge of the seat cushion is in the highest position and the rear edge of the seat cushion is in the lowest position.

▶ Set the seat backrest to the most vertical position possible.

▶ Fit the child restraint system.
The entire base of the child restraint system must always rest on the sitting surface of the front passenger seat.

▶ Always make sure that the shoulder belt strap is correctly routed from the seat belt outlet of the vehicle to the shoulder belt guide on the child restraint system.
The shoulder belt strap must be routed forwards and downwards from the seat belt outlet.

▶ If necessary, adjust the front passenger seat accordingly.

Child safety locks

Activating or deactivating the child safety lock for the rear doors

⚠ **WARNING** Risk of accident and injury due to children left unattended in the vehicle

If children are left unsupervised in the vehicle, they could, in particular:

- open doors, thereby endangering other persons or road users.
- get out and be struck by oncoming traffic.

- operate vehicle equipment and become trapped, for example.

In addition, the children could also set the vehicle in motion, for example by:

- releasing the parking brake.
- change the transmission position.
- start the vehicle.

▶ Never leave children unattended in the vehicle.

▶ When leaving the vehicle, always take the key with you and lock the vehicle.

▶ Keep the key out of reach of children.

This also applies to the Digital Vehicle Key if the "Digital Vehicle Key" function is activated via Mercedes me connect.

⚠ WARNING Risk of fatal injury due to exposure to extreme heat or cold in the vehicle

If people –particularly children – are exposed to extreme temperatures over an extended period of time, there is a risk of serious or even fatal injury!

▶ Never leave anyone – particularly children – unattended in the vehicle.

▶ Never leave animals in the vehicle unattended.

⚠ WARNING Risk of accident and injury due to children left unattended in the vehicle

If children are travelling in the vehicle, they could, in particular:

- open doors, thereby endangering other persons or road users
- get out and be struck by oncoming traffic
- operate vehicle equipment and become trapped, for example

▶ Always activate the child safety locks installed if children are travelling in the vehicle.

▶ Never leave children unattended in the vehicle.

▶ When leaving the vehicle, always take the key with you and lock the vehicle. This also applies to the Digital Vehicle Key if the "Digital Vehicle Key" function is activated via Mercedes me connect.

Vehicles for the United Kingdom: observe the important safety notes in the "Notes on the additional door lock" section.

There are child safety locks for the rear doors and the rear side windows.
The child safety lock on the rear doors secures each door separately. The doors can no longer be opened from the inside.

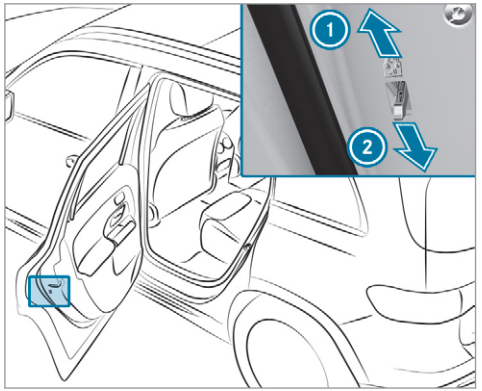

- Press the lever in direction (1) (activate) or (2) (deactivate).
- Make sure that the child safety locks are working properly.

Activating or deactivating the child safety lock for the rear side windows

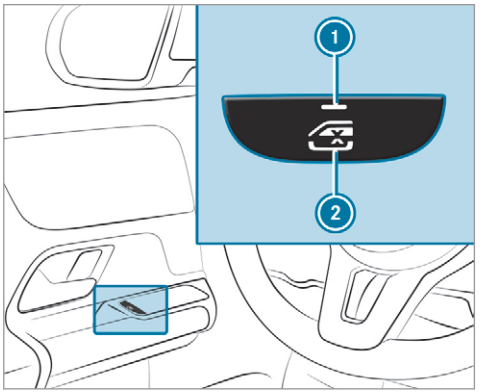

- **To activate/deactivate:** press button (2).

  The rear side window can be opened or closed in the following cases:
  - indicator lamp (1) is lit: via the switch on the driver's door
  - Indicator lamp (1) is off: via the switch on the corresponding rear door or driver's door.

Notes on pets in the vehicle

WARNING Risk of accident and injury due to animals left unsecured or unattended in the vehicle

If you leave animals in the vehicle unattended or unsecured, they could possibly press down buttons or switches.

Thereby an animal may:

- activate vehicle equipment and become trapped, for example
- switch systems on or off and endanger other road users

Unsecured animals may be thrown around in the vehicle in the event of an accident or sudden steering and braking manoeuvres and injure vehicle occupants in the process.

- Never leave animals in the vehicle unattended.
- Always correctly secure animals while driving, e.g. using a suitable animal carrier.

Key

Overview of key functions

WARNING Risk of accident and injury due to children left unattended in the vehicle

If children are left unsupervised in the vehicle, they could, in particular:

- open doors, thereby endangering other persons or road users.
- get out and be struck by oncoming traffic.
- operate vehicle equipment and become trapped, for example.

In addition, the children could also set the vehicle in motion, for example by:

- releasing the parking brake.
- change the transmission position.
- start the vehicle.

▶ Never leave children unattended in the vehicle.

▶ When leaving the vehicle, always take the key with you and lock the vehicle.

▶ Keep the key out of reach of children.

This also applies to the Digital Vehicle Key if the "Digital Vehicle Key" function is activated via Mercedes me connect.

NOTE Damage to the key caused by magnetic fields

▶ Keep the key away from strong magnetic fields.



① Locks
② Indicator lamp
③ Unlocks
④ Opens/closes the tailgate

ⓘ If indicator lamp ② does not light up after pressing the or button, the battery is discharged.

Replacing the key battery (→ page 76).

The key locks and unlocks the following components:

- the doors
- the fuel filler flap

- the tailgate

If the vehicle is not opened within approximately 40 seconds after unlocking, it locks again. Anti-theft protection is primed again.

Do not keep the key together with electronic devices or metal objects. This can affect the key's functionality.

Activating/deactivating the acoustic locking verification signal

Multimedia system:

↳ ⌂ ▸▸ Settings ▸▸ Vehicle

▶ Activate or deactivate Acoustic lock.

ⓘ **Please note:**
The selected setting for the acoustic locking verification signal must comply with the relevant national road and traffic regulations. In some countries, including Germany, using the acoustic locking verification signal is forbidden by traffic laws (in accordance with §16 Para. 1 and §30 Para. 1 of the German national road traffic regulations). The driver of the vehicle must comply with these regulations. In countries where the use of this function is forbidden, this function is not activated in the vehicle and must not be activated.

Changing the unlocking settings

Possible unlocking functions of the key:

- Central unlocking
- Unlocking the driver's door and fuel filler flap

▶ **To switch between settings:** press the 🔓 and 🔓 buttons simultaneously for approximately six seconds until the indicator lamp flashes twice.

Options if the unlocking function for the driver's door and fuel filler flap has been selected:

- **To unlock the vehicle centrally:** press the 🔓 button twice.
- **Vehicles with KEYLESS-GO:** if you touch the inner surface of the door handle on the driver's door, only the driver's door and fuel filler flap are unlocked.

Deactivating the key functions

If you do not use the vehicle or a key for an extended period of time, you can reduce the energy consumption of the respective key. To do so, deactivate the key functions.

▶ **To deactivate:** press the 🔓 button on the key twice in quick succession.
The key indicator lamp flashes twice briefly and lights up once.

▶ **To activate:** press any button on the key.

ⓘ When the vehicle is started with the key in the stowage compartment of the centre console, the key functions are automatically activated (→ page 169).

Removing/inserting the emergency key

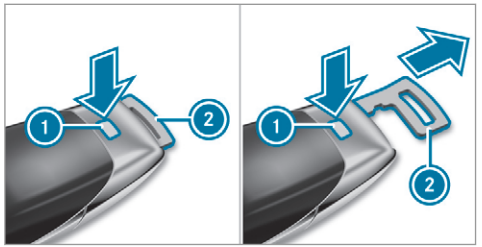

- **To remove:** press release knob (1). Emergency key (2) is pushed out slightly.
- Pull out emergency key (2) until it engages in the intermediate position.
- Press release knob (1) again and fully remove emergency key (2).
- **To insert:** press release knob (1).
- Insert emergency key (2) to the intermediate position or fully until it engages.

ⓘ You can use the intermediate position of emergency key (2) to attach the key to a key ring.

Replacing the key battery

⚠ **DANGER** Serious damage to health caused by swallowing batteries

Batteries contain toxic and corrosive substances. Swallowing batteries may cause serious damage to health.

There is a risk of fatal injury.

- Keep batteries out of the reach of children.
- If batteries are swallowed, seek medical attention immediately.

ENVIRONMENTAL NOTE Environmental damage due to improper disposal of batteries



Batteries contain pollutants. It is illegal to dispose of them with the household rubbish.



Dispose of batteries in an environmentally responsible manner. Take discharged batteries to a qualified specialist workshop or to a collection point for used batteries.

Requirements:

- You require a CR 2032 3 V cell battery.

Mercedes-Benz recommends that you have the battery replaced at a qualified specialist workshop.

- Remove the emergency key (→ page 76).

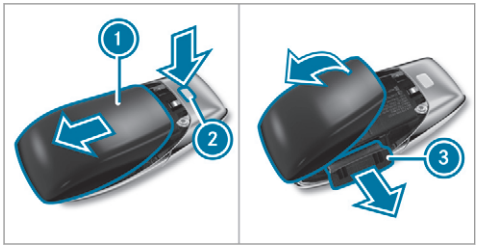

- ▶ Press release knob (2) down fully and slide cover (1) in the direction of the arrow.
- ▶ Fold out cover (1) in the direction of the arrow and remove.
- ▶ Remove battery compartment (3) and take out the discharged battery.
- ▶ Insert the new battery into battery compartment (3). Observe the positive pole marking in the battery compartment and on the battery when doing this.
- ▶ Push in battery compartment (3).
- ▶ Re-attach cover (1) and push it until it engages.

Problems with the key

You can no longer lock or unlock the vehicle

Possible causes:

- The key battery is weak or discharged.
- The key is faulty.

- ▶ Check the battery using the indicator lamp and replace if necessary (→ page 76).
- ▶ Use the emergency key to lock or unlock (→ page 76).
- ▶ Have the key checked at a qualified specialist workshop.

There is interference from a powerful radio signal source

The key function is impaired by, for example:

- high voltage power lines
- mobile phones
- electronic devices (Notebooks, Tablets)
- shielding due to metal objects or induction loops for electrical gate systems or automatic barriers

- ▶ Make sure that there is a sufficient distance between the key and the potential source of interference.

You have lost a key

- ▶ Have the key deactivated at a qualified specialist workshop.
- ▶ If necessary, have the mechanical lock replaced as well.

Doors

Notes on the additional door lock

The additional door lock is only available for vehicles for the United Kingdom.

⚠ **WARNING** Risk of injury to persons inside the vehicle when the additional door lock is activated

If the additional door lock is activated, the doors can no longer be opened from the inside.

- Never leave persons, in particular children, unattended in the vehicle.
- If there are persons in the vehicle, do not activate the additional door lock.

The additional door lock is automatically activated in the following situations:

- The vehicle is locked using the key.
- The vehicle is locked using KEYLESS-GO.

If the vehicle has been locked via Mercedes me connect, the additional door lock is not activated.

If the additional door lock is activated, the doors cannot be opened from the inside.

ⓘ After locking you can issue a signal with the horn.

You can prevent the additional door lock from being activated by deactivating interior protection before locking the vehicle (→ page 98).

Unlocking/opening the doors from the inside

- **United Kingdom only:** observe the notes on the additional door lock (→ page 77).

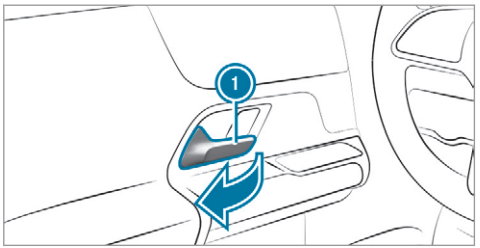

- Pull door handle 1.

Centrally locking and unlocking the vehicle from the inside

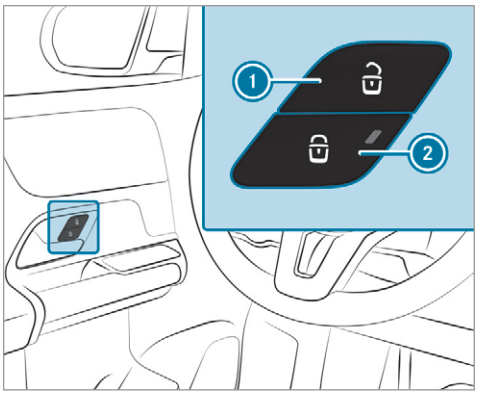

- **To unlock:** press button 1.
- **To lock:** press button 2.
  The indicator lamp lights up.

This does not lock or unlock the fuel filler flap.

The vehicle is not unlocked:

- If you have locked the vehicle using the key.
- If you have locked the vehicle using KEYLESS-GO.

Locking/unlocking the vehicle with a Digital Vehicle Key

Requirements:

- one of the following versions of the Digital Vehicle Key is available:
  - suitable mobile phone
  - Digital Vehicle Key sticker
- the vehicle is equipped with the "Digital Vehicle Key" function.
- the "Digital Vehicle Key" function is activated via Mercedes me connect: https://www.mercedes.me.
- the mobile phone is sufficiently charged.

ⓘ Mercedes-Benz recommends that you carry the emergency key in case of function restrictions.

ⓘ If the mobile phone is in a protective case, this can impair the functionality.

If the vehicle has been parked for longer than two weeks, the NFC aerial in the door handle is deactivated.

▶ Pull the door handle.
The NFC aerial is activated.

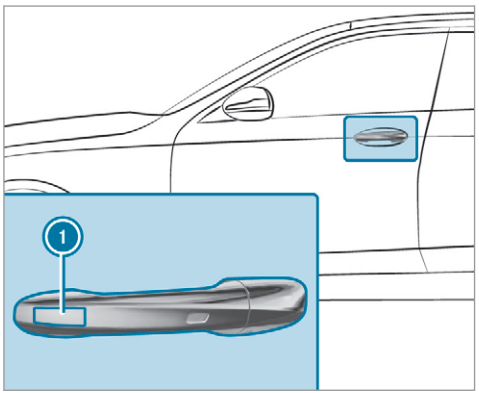

▶ Touch the door handle on the driver's door in the area where NFC aerial ① is located with the part of the Digital Vehicle Key where the NFC aerial is located.
The vehicle is locked or unlocked alternately.

If you lose the Digital Vehicle Key, deactivate the "Digital Vehicle Key" service via Mercedes me connect on the https://www.mercedes.me.

Locking/unlocking the vehicle with KEYLESS-GO

Requirements:

- The key is outside the vehicle.
- The distance between the key and the vehicle does not exceed 1 m.
- The driver's door and the door at which the door handle is used are closed.

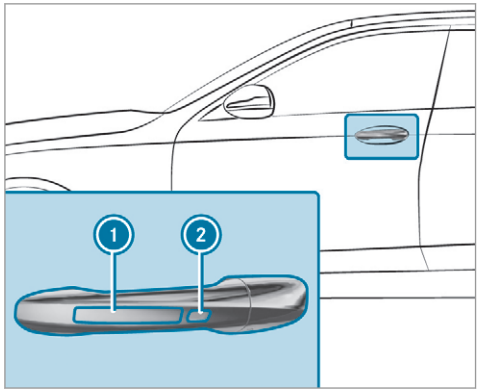

- ▶ **To unlock the vehicle:** touch the inner surface of the door handle.
- ▶ **To lock the vehicle:** touch sensor surface 1 or 2.
- ▶ **Convenience closing:** touch recessed sensor surface 2 until the closing process has been completed.

ⓘ Further information on convenience closing (→ page 90).

If you open the tailgate from outside, it is automatically unlocked.

Problems with KEYLESS-GO

You can no longer lock or unlock the vehicle using KEYLESS-GO.

Possible causes:

- The key functions have been deactivated (→ page 75).
- The key battery is weak or discharged.
- The key is faulty.

- ▶ Activate the key functions (→ page 75).
- ▶ Check the battery using the indicator lamp and replace if necessary (→ page 76).
- ▶ Use the emergency key to unlock or lock the vehicle (→ page 76).
- ▶ Have the vehicle and key checked at a qualified specialist workshop.

There is interference from a powerful radio signal source.

The KEYLESS-GO function is impaired by, for example:

- high voltage power lines
- mobile phones
- electronic devices (Notebooks, Tablets)
- shielding due to metal objects or induction loops for electrical gate systems or automatic barriers

- ▶ Make sure that there is a sufficient distance between the key and the potential source of interference.

Activating/deactivating the automatic locking feature

The vehicle is locked automatically when the ignition is switched on and the wheels are turning faster than walking pace.

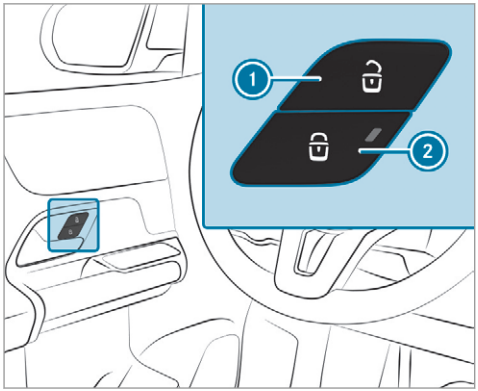

- **To activate:** press and hold button (2) for approximately five seconds until an acoustic signal sounds.
- **To deactivate:** press and hold button (1) for approximately five seconds until an acoustic signal sounds.

When the vehicle is locked automatically, the indicator lamp in button (2) lights up.

In the following situations, there is a danger of being locked out when the function is activated:

- While the vehicle is being tow started/pushed.
- If the vehicle is being tested on a roller dynamometer.

Locking/unlocking the vehicle with the emergency key

Locking/unlocking the driver's door with the emergency key

ⓘ If you wish to lock the vehicle entirely using the emergency key, first press the button for locking from the inside while the driver's door is open. Then proceed to lock the driver's door using the emergency key.

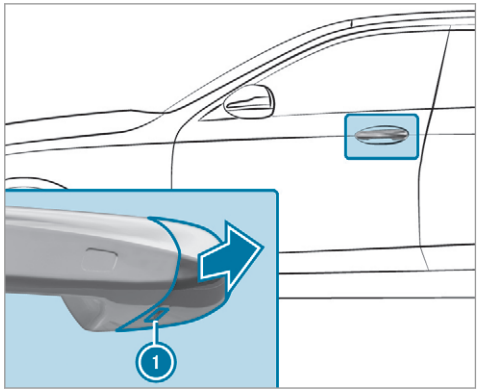

- Insert the emergency key as far as it will go into opening (1) in the cover.
- Pull and hold the door handle.
- Pull the cover on the emergency key as straight as possible away from the vehicle until it releases.
- Release the door handle.

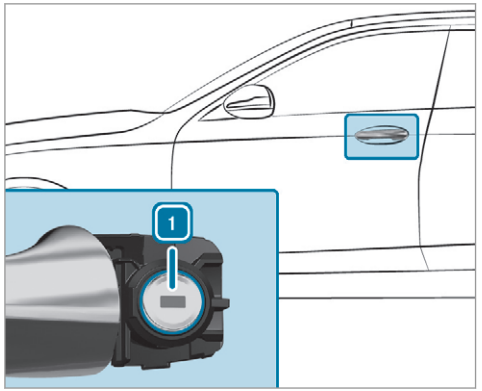

- **To unlock:** turn the emergency key anti-clockwise to position 1.
- **To lock:** turn the emergency key clockwise to position 1.
- Carefully press the cover onto the lock cylinder until it engages and is seated firmly.

Locking the front passenger door and rear doors with the emergency key

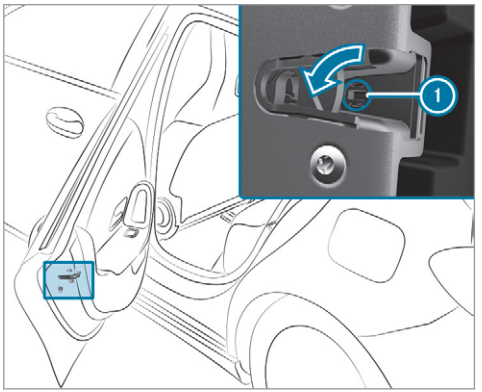

- Insert a suitable object, e.g. the emergency key, into opening (1) on the door lock.
- **To lock the left-hand side of the vehicle:** turn the emergency key anti-clockwise as far as it will go.
- **To lock the right-hand side of the vehicle:** turn the emergency key clockwise as far as it will go.

If the locked door is then closed, it can no longer be opened from outside.

Load compartment

Opening the tailgate

DANGER Risk of exhaust gas poisoning

Combustion engines emit poisonous exhaust gases such as carbon monoxide. Exhaust gases can enter the vehicle interior if the tailgate is open when the engine is running, especially if the vehicle is in motion.

- Always switch off the engine before opening the tailgate.
- Never drive with the tailgate open.

NOTE Damage to the tailgate caused by obstacles above the vehicle

The tailgate swings rearwards and upwards when it is opened.

- Make sure that there is sufficient space behind and above the tailgate.

- Pull the tailgate handle.
- **Vehicles with HANDS-FREE ACCESS:** make a kicking movement with your foot below the bumper (→ page 86).

Vehicles with an EASY-PACK tailgate

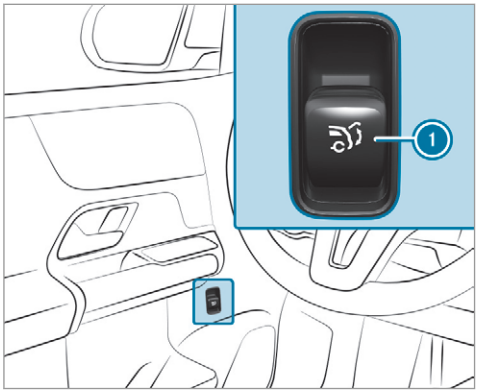

- Pull remote operating switch 1 for the tailgate.
- Press and hold the button on the key.
- If the tailgate is unlocked, pull the tailgate handle and release it again immediately.
- For a tailgate stopped in an intermediate position, pull it upwards and release it as soon as it starts to open.

The tailgate is equipped with an automatic object recognition function. If a solid object blocks or restricts the tailgate during automatic opening, this process will be stopped. The automatic object recognition function is only an aid. It is not a substitute for your attentiveness when you are opening the tailgate.

Closing the tailgate

WARNING Risk of injury from unsecured items in the vehicle

If objects, luggage or loads are not secured or not secured sufficiently, they could slip, tip over or be thrown around and thereby hit vehicle occupants.

There is a risk of injury, particularly in the event of sudden braking or a sudden change in direction.

- Always stow objects in such a way that they cannot be thrown around.
- Before the journey, secure objects, luggage or loads against slipping or tipping over.

Observe the notes on loading the vehicle.

- Pull the tailgate downwards with the handle and let it drop into the lock.

Vehicles with an EASY-PACK tailgate

⚠ WARNING Risk of becoming trapped during automatic closing of the tailgate

Body parts may become trapped. There may be people in the closing area.

- Make sure that nobody is in the vicinity of the closing area during the closing process.

Use one of the following options to stop the closing process:

- Press the [button] button on the key.
- Press or pull the remote operating switch on the driver's door.
- Press the closing or locking button on the tailgate.
- Pull the tailgate handle.

- **Vehicles with HANDS-FREE ACCESS:** it is also possible to stop the closing process by making a kicking movement below the rear bumper.
- Pull the tailgate downwards slightly. Release it as soon as it begins to close.

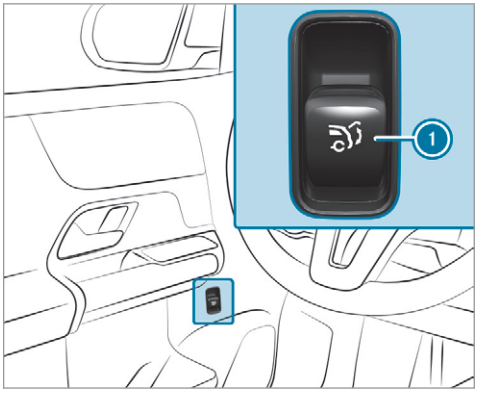

- Switch on the power supply or the ignition.
- Press remote operating switch (1) for the tailgate.

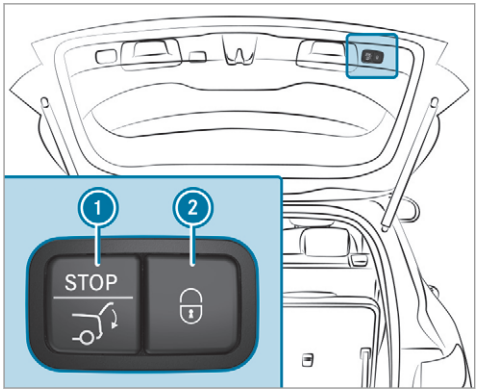

▶ Press closing button (1) on the tailgate.

Vehicles with KEYLESS-GO

▶ Press locking button (2) on the tailgate. If a key is detected outside the vehicle, the tailgate will close and the vehicle will be locked.

▶ Press and hold the button on the key (with the key in the vicinity of the vehicle).

Vehicles with HANDS-FREE ACCESS

▶ Make a kicking movement with your foot below the bumper (→ page 86).

Automatic reversing function for the tailgate

The tailgate is equipped with automatic object recognition with a reversing function. If a solid object hinders or restricts the tailgate when it is closing automatically, the tailgate will automatically open again slightly. Automatic object recognition with reversing function is only an aid. It is not a substitute for your attentiveness when you are closing the tailgate.

▶ During the closing process, make sure that no body parts are in the closing area.

⚠ **WARNING** Risk of becoming trapped despite reversing function

The reversing function will not react:

- to soft, light and thin objects, e.g. fingers
- towards the end of the closing procedure

In these situations in particular, the reversing function cannot prevent someone being trapped.

▶ Ensure that no body parts are in the closing area.

If someone is trapped, either:

- Press the button on the key.
- Press or pull the remote operating switch on the driver's door.
- Press the closing or locking button on the tailgate.
- Pull the tailgate handle.

HANDS-FREE ACCESS function

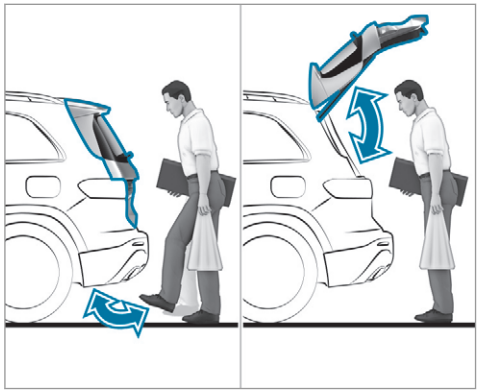

With HANDS-FREE ACCESS you can open, close or stop the closing process of the tailgate by performing a kicking movement under the rear bumper.

The kicking movement triggers the opening or closing process alternately.

Observe the notes when opening (→ page 82) and closing (→ page 83) the tailgate.

ⓘ Two warning tones sound when the tailgate is opening or closing.

⚠ WARNING Risk of burns caused by a hot exhaust system

The vehicle exhaust system can become very hot. If you use HANDS-FREE ACCESS, you could burn yourself by touching the exhaust system.

▶ Always ensure that you only make a kicking movement within the detection range of the sensors.

! NOTE Vehicle damage due to unintentional opening of the tailgate

- when using an automatic car wash
- when using a high pressure cleaner

▶ Deactivate KEYLESS-GO or make sure that the key located is at least 3 m away from the vehicle in such situations.

When making the kicking movement, make sure that you are standing firmly on the ground. You could otherwise lose your balance, e.g. on ice.

Observe the following notes:

- The key is behind the vehicle.
- Stand at least 30 cm away from the vehicle while performing the kicking movement.
- Do not come into contact with the bumper while making the kicking movement.
- Do not carry out the kicking movement too slowly.
- The kicking movement must be towards the vehicle and back again.

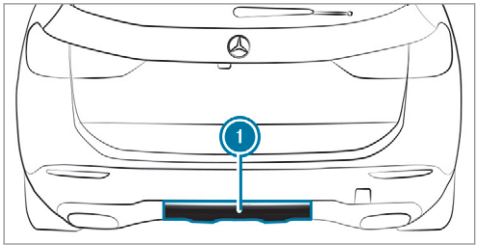

① Detection range of the sensors

If several consecutive kicking movements are not successful, wait ten seconds.

System limits

The system may be impaired or may not function in the following cases:

- The sensors are dirty, e.g. due to road salt or snow.
- The kicking movement is made using a prosthetic leg.

The tailgate can open or close unintentionally in the following situations:

- If a person's arms or legs are moving in the sensor detection range, e.g. when polishing the vehicle or picking up objects.
- If objects are moved or placed behind the vehicle, e.g. tensioning straps or luggage.
- If clamping straps, tarpaulins or other coverings are pulled over the bumper.
- If a protective mat with a length reaching over the boot sill down into the detection range of the sensors is used.
- If the protective mat is not secured correctly.
- When working on the trailer hitch, trailers or rear bicycle racks.

Deactivate the key functions (→ page 75) or do not carry the key about your person in such situations.

Limiting the opening angle of the tailgate

Activating the opening angle limiter

You can limit the opening angle of the tailgate in the top half of its opening range to approximately 20 cm before the end position.

▶ Stop the opening procedure of the tailgate at the desired position.

▶ Press and hold the closing button on the tailgate until you hear a short acoustic signal. The opening angle limiter will be activated. The tailgate will then stop in the stored position when opened.

To open the tailgate fully, pull the handle on the outside of the tailgate again after it has stopped automatically.

Deactivating the opening angle limiter

▶ Press and hold the closing button on the tailgate until two short acoustic signals sound.

Unlocking the tailgate with the emergency key

▶ Fold the rear seat backrest forward.

▶ Remove the load compartment cover.

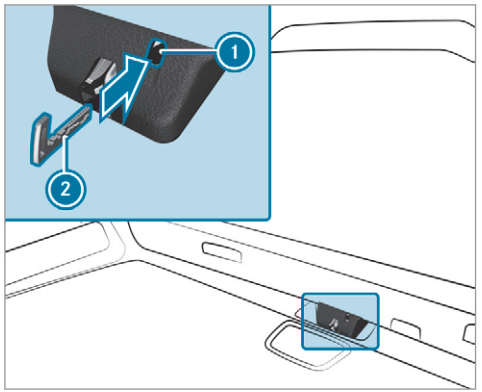

▶ Insert the emergency key (2) into the opening (1) in the trim and push it in.
The tailgate will be unlocked.

Side windows

Opens and closes the side windows

⚠ WARNING Risk of becoming trapped when opening a side window

When you open a side window, parts of the body could be drawn in or become trapped between the side window and window frame.

▶ When opening, make sure that nobody is touching the side window.

▶ If someone is trapped, release the button immediately or pull it in order to close the side window again.

⚠ WARNING Risk of becoming trapped when closing a side window

When closing a side window, body parts could be trapped in the closing area in the process.

▶ When closing, make sure that no body parts are in the closing area.

▶ If someone is trapped, release the button immediately or press the button in order to reopen the side window.

⚠ WARNING Risk of becoming trapped when children operate the side windows

Children could become trapped if they operate the side windows, particularly when unattended.

▶ Activate the child safety lock for the rear side windows.

▶ When leaving the vehicle, always take the key with you and lock the vehicle.

▶ Never leave children unattended in the vehicle.

Requirements:

- The power supply or the ignition is switched on.

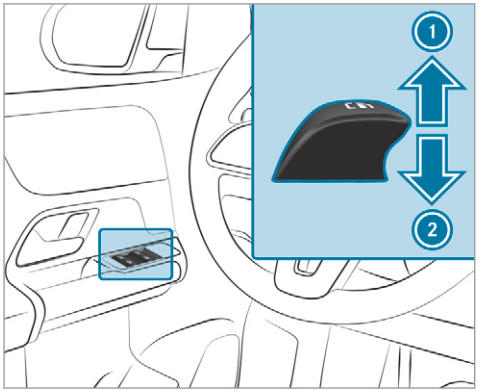

① Closing
② Opening

The buttons on the driver's door take precedence.

▶ **To start automatic operation:** press the button beyond the point of resistance or pull and release it.

▶ **To interrupt automatic operation:** press or pull the button again.

When the vehicle is switched off, the side windows can continue being operated.

This function is available for around four minutes or until a front door is opened.

Automatic reversing function of the side windows

If an object impedes a side window during the closing process, the side window will open again automatically. The automatic reversing function is only an aid and is not a substitute for your attentiveness.

▶ During the closing process, make sure that no body parts are in the closing area.

⚠ **WARNING** Risk of becoming trapped despite there being reversing protection on the side window

The reversing function does not react:

- to soft, light and thin objects, e.g. fingers.
- during resetting.

The reversing function cannot prevent someone from becoming trapped in these situations.

▶ During the closing process, make sure that no body parts are in the closing area.

▶ If someone becomes trapped, press the button to open the side window again.

Automatic function of the side windows

In the following cases, the side windows will be closed automatically when the vehicle is switched off:

- if it starts to rain (detected by the rain sensor on the windscreen)
- in extreme temperatures
- after a certain time (depending on the on-board electrical system voltage)
- if there is a malfunction in the power supply

The side windows will be closed as far as the ventilation position.

Vehicles with a panorama sliding sunroof: the side windows will be closed completely if the sliding sunroof is open.

If the side windows are obstructed during automatic closing, the side window concerned will open again slightly. The automatic function for the sliding sunroof and the side windows will then be deactivated.

Convenience opening (ventilating the vehicle before starting a journey)

WARNING Risk of entrapment when opening a side window

When opening a side window, parts of the body could be drawn in or become trapped between the side window and window frame.

- When opening, make sure that nobody is touching the side window.
- Release the button immediately if somebody becomes trapped.

- Press and hold the button on the key.

  The following functions are performed:
  - The vehicle is unlocked.
  - The side windows are opened.
  - The panoramic sliding roof is opened.
  - The seat ventilation of the driver's seat is switched on.

ⓘ If the roller sunblind of the panoramic sliding sunroof is closed, the roller sunblind is opened first.

- **To interrupt convenience opening:** release the button.
- **To continue convenience opening:** press and hold the button again.

Convenience closing (closing the vehicle from outside)

WARNING Risk of entrapment due to not paying attention during convenience closing

When the convenience closing feature is operating, parts of the body could become trapped in the closing area of the side window and the sliding sunroof.

- When the convenience closing feature is operating, monitor the entire closing process and make sure that no body parts are in the closing area.

- Press and hold the button on the key.

  The following functions are performed:
  - The vehicle is locked.
  - The side windows are closed.
  - The panoramic sliding roof is closed.
- **To interrupt convenience closing:** release the button.

▶ **To close the roller sunblinds:** press and hold the button again.

ⓘ Convenience closing can also be operated with KEYLESS-GO (→ page 79).

Problems with the side windows

⚠ **WARNING** Risk of becoming trapped or fatally injured if reversing protection is not activated

If you close a side window again immediately after it has been blocked, the side window will close with increased or maximum force. The reversing function is then not active and body parts may become trapped.

▶ Make sure that no parts of the body are in the closing area.

▶ To stop the closing process, release the button or press the button again to reopen the side window.

A side window cannot be closed and you cannot see the cause.

▶ Check to see whether any objects are in the window guide.

▶ Adjust the side windows.

Adjusting the side windows

If a side window is obstructed during closing and reopens again immediately:

▶ Immediately after this, pull the corresponding button again until the side window has closed and hold the button for at least one more second (re-adjustment).
The side window will be closed without the automatic reversing function.

If the side window is obstructed again and reopens again immediately:

▶ Immediately after this, pull the corresponding button again until the side window has closed and hold the button for at least one more second (follow-up adjustment).
The side window will be closed without the automatic reversing function.

The side windows cannot be opened or closed using the convenience opening feature.

- The key battery is weak or discharged.

▶ Check the battery using the indicator lamp and replace if necessary (→ page 76).

Sliding sunroof

Opening and closing the sliding sunroof

ⓘ The term "sliding sunroof" also refers to the panorama sliding sunroof.

⚠ **WARNING** Risk of becoming trapped when the sliding sunroof is being opened and closed

Body parts may become trapped in the range of movement.

▶ During opening and closing, make sure that no body parts are in the range of movement.

▶ Release the button immediately if somebody becomes trapped.

or

- Briefly press the button in any direction during automatic operation.
  The opening or closing process will be stopped.

⚠ WARNING Risk of entrapment if the sliding sunroof is operated by children

Children operating the sliding sunroof could get caught in the moving parts, particularly if unattended.

- Never leave children unattended in the vehicle.
- When leaving the vehicle, always take the key with you and lock the vehicle.

⚠ WARNING Risk of becoming trapped when the roller sunblind is being opened and closed

Body parts may become trapped between the roller sunblind and frame or sliding roof.

- When opening or closing, make sure that no body parts are in the roller sunblind's range of movement.
- Release the button immediately if somebody becomes trapped.

or

- Briefly press the button in any direction during automatic operation.
  The opening or closing process will be stopped.

! NOTE Malfunction due to snow and ice

Snow and ice may cause the sliding sunroof to malfunction.

- Open the sliding sunroof only if it is free of snow and ice.

! NOTE Damage caused by protruding objects

Objects that protrude from the sliding sunroof may damage the sealing strips.

- Do not allow anything to protrude from the sliding sunroof.

! NOTE Important points to remember when a roof luggage rack is fitted

When a roof luggage rack is fitted, raising or opening the sliding sunroof may be limited.

- Check whether the sliding sunroof can be raised or opened when a roof luggage rack is fitted.
- If in doubt, do not raise or open the sliding sunroof.

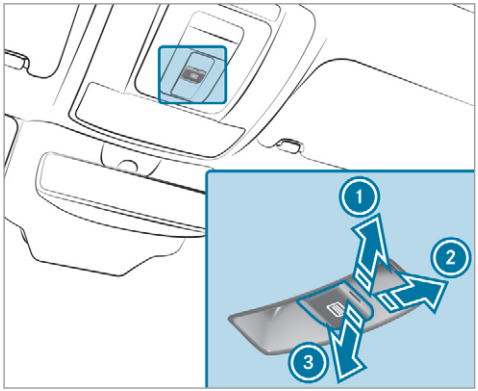

① To raise
② To open
③ To close/lower

Use the button to operate the panorama sliding sunroof and the roller sunblind.

The panorama sliding sunroof can be operated only when the roller sunblind is open.

- Check whether the sliding sunroof can be raised or opened when a roof luggage rack is fitted.
- **To start automatic operation:** press the button beyond the point of resistance or pull and release it.
- **To interrupt automatic operation:** briefly press the button in any direction. The opening/closing process will be stopped.

Automatic reversing function of the sliding sunroof

If an object is obstructing the sliding sunroof during the closing process, the sliding sunroof will open again automatically. The automatic reversing function is only an aid and is not a substitute for your attentiveness.

- During the closing process, make sure that no body parts are in the closing area.

⚠ WARNING Risk of becoming trapped despite the reversing function being active

In particular, the reversing function does not react:

- to soft, light and thin objects, e.g. fingers.
- towards the end of the closing procedure.
- during resetting.

- During the closing process, make sure that no body parts are in the closing area.
- Release the button immediately if somebody becomes trapped.

or

- Briefly press the button in any direction during automatic operation. The closing process will be stopped.

Automatic reversing function of the roller sunblind

If an object is obstructing the roller sunblind during the closing process, the roller sunblind will open again automatically. The automatic revers-

ing function is only an aid and is not a substitute for your attentiveness.

- When closing the roller sunblind, make sure that no body parts are in the range of movement.

WARNING Risk of becoming trapped despite reversing function

In particular, the reversing function does not react to soft, light and thin objects, e.g. fingers.

- When closing the roller sunblind, make sure that no body parts are in the range of movement.
- Release the button immediately if somebody becomes trapped.

or

- Briefly press the button in any direction during the automatic closing process. The closing process will be stopped.

Automatic functions of the sliding sunroof

The term "sliding sunroof" also refers to the panorama sliding sunroof.

By pushing or pulling the button, you can interrupt the automatic functions: "Rain closing function when driving" and "Automatic lowering".

The sliding sunroof will be closed automatically when the vehicle has been switched off in the following situations:

- if it starts to rain (detected by the rain sensor on the windscreen)
- in the event of extreme outside temperatures
- after a certain time (depending on the on-board electrical system voltage)
- if there is a malfunction in the power supply

The sliding sunroof will then rise at the rear in order to continue ventilating the vehicle interior.

If the sliding sunroof is obstructed during an automatic closing procedure, the roof will be opened again slightly. The automatic function for the sliding sunroof and the side windows will then be deactivated.

Rain closing function when driving

Vehicles with a panorama sliding sunroof: if it starts to rain, the raised sliding sunroof will automatically be lowered while the vehicle is in motion.

Automatic lowering function

Vehicles with a panorama sliding sunroof: if the sliding sunroof is raised at the rear, it will automatically be lowered slightly at higher speeds. At low speeds, it will be raised again automatically.

WARNING Risk of becoming trapped by automatic lowering of the sliding sunroof

At higher speeds, the raised sliding sunroof will automatically be lowered slightly at the rear.

- Make sure that nobody reaches into the sliding sunroof's range of movement while the vehicle is in motion.

- If somebody becomes trapped, briefly push the sliding sunroof button forwards or backwards.

Problems with the sliding sunroof

WARNING Risk of becoming trapped or fatal injuries when the sliding sunroof is closed again

If the sliding sunroof is closed again immediately after it has been blocked or reset, it will close with increased force.

- Make sure that no parts of the body are in the closing area.
- Release the button immediately if somebody becomes trapped.

or

- Briefly press the button in any direction during the automatic closing process. The closing process will be stopped.

The sliding sunroof cannot be closed and you cannot see the cause.

The term "sliding sunroof" also refers to the panorama sliding sunroof.

If the sliding sunroof is obstructed during closing and reopens again slightly:

- Immediately after automatic reversing, pull and hold the button down again to the point of resistance until the sliding sunroof is closed. The sliding sunroof will be closed with increased force.

If the sliding sunroof is obstructed again and reopens again slightly:

- Repeat the previous step. The sliding sunroof will be closed with even greater force.

Vehicles with a panorama sliding sunroof: the sliding sunroof or the roller sunblind is not operating smoothly.

- Reset the sliding sunroof and the roller sunblind.

Resetting the sliding sunroof and the roller sunblind

- Pull and hold the button little by little until the sliding sunroof is fully closed.
- Pull and hold the button little by little until the roller sunblind is fully closed.
- Use automatic operation to fully open and then close the sliding sunroof.

Anti-theft protection

Function of the immobiliser

The immobiliser prevents your vehicle from being started without the correct key.

The immobiliser is automatically activated when the ignition is switched off and deactivated when the ignition is switched on.

ATA (Anti-Theft Alarm system)

Function of the ATA system

If the ATA system is primed, a visual and audible alarm is triggered in the following situations:

- when a door is opened
- when the tailgate is opened
- when the bonnet is opened
- when interior protection is triggered (→ page 97)
- when tow-away protection is triggered (→ page 96)

The ATA system is primed automatically after approximately ten seconds in the following situations:

- after locking the vehicle with the key
- after locking the vehicle using KEYLESS-GO

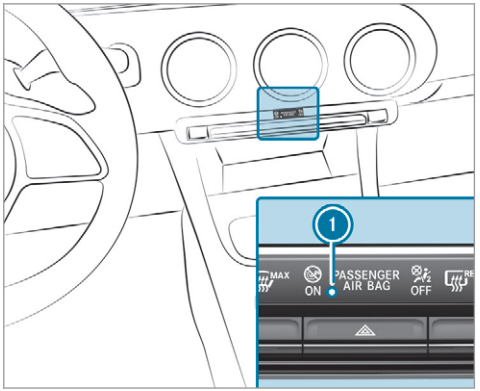

Indicator lamp (1) flashes when the ATA system is primed.

The ATA system is deactivated automatically in the following situations:

- after unlocking the vehicle with the key
- after unlocking the vehicle using KEYLESS-GO
- after pressing the start/stop button with the key in the stowage compartment (→ page 169)

ⓘ When the Mercedes-Benz emergency call system is active and the alarm stays on for more than 30 seconds, a message is automatically sent to the Customer Assistance Centre (→ page 303).

Deactivating the ATA

▶ Press the [ ], [ ] or [ ] button on the key.

or

▶ Press the start/stop button with the key in the stowage compartment (→ page 169)

Deactivating the alarm using KEYLESS-GO

▶ Grasp the outside door handle with the key outside the vehicle.

Function of tow-away protection

An audible and visual alarm is triggered if an alteration to your vehicle's angle of inclination is detected while tow-away protection is primed.

Tow-away protection is automatically primed after approximately 60 seconds:

- after locking the vehicle with the key
- after locking the vehicle using KEYLESS-GO

Tow-away protection is only primed when the following components are closed:

- the doors
- the tailgate

Tow-away protection is automatically deactivated:

- after pressing the button or button on the key
- after pressing the start/stop button with the key in the stowage compartment (→ page 169)
- after unlocking the vehicle using KEYLESS-GO
- when using HANDS-FREE ACCESS

Information on collision detection on a parked vehicle (→ page 201).

Priming/deactivating tow-away protection

Multimedia system:

→ ⌂ ▸▸ Settings ▸▸ Quick access

▶ Prime or deactivate Tow-away protection.

Tow-away protection is primed again in the following cases:

- The vehicle is unlocked again.
- A door is opened.
- The vehicle is locked again.

ⓘ If quick access is unavailable, select the Vehicle submenu in the Settings main menu to prime or deactivate tow-away protection.

Function of interior protection

When interior protection is primed, a visual and audible alarm is triggered if movement is detected in the vehicle interior.

Interior protection is primed automatically after approximately ten seconds:

- after locking the vehicle with the key
- after locking the vehicle using KEYLESS-GO

Interior protection is only primed when the following components are closed:

- the doors
- the tailgate

Interior protection is automatically deactivated:

- after pressing the or button on the key
- after pressing the start/stop button with the key in the stowage compartment (→ page 169)
- after unlocking the vehicle using KEYLESS-GO
- when using HANDS-FREE ACCESS

The following situations can lead to a false alarm:

- moving objects such as mascots in the vehicle interior
- when the side window is open
- when the panoramic sliding sunroof is open

Priming/deactivating interior protection

Multimedia system:

↳ ⌂ ⏩ Settings ⏩ Quick access

▶ Prime or deactivate Interior motion sensor.

Interior protection is primed again in the following cases:

- The vehicle is unlocked again.
- A door is opened.
- The vehicle is locked again.

ⓘ If quick access is unavailable, select the Vehicle menu under Settings to prime or deactivate interior protection.

Notes on the correct driver's seat position

⚠ **WARNING** Risk of accident due to adjusting vehicle settings while the vehicle is in motion

You could lose control of the vehicle in the following situations in particular:

- If you adjust the driver's seat, the head restraints, the steering wheel or the mirror while the vehicle is in motion.
- If you fasten your seat belt while the vehicle is in motion.

▶ Before starting the engine: adjust the driver's seat, the head restraints, the steering wheel and the mirror and fasten your seat belt.

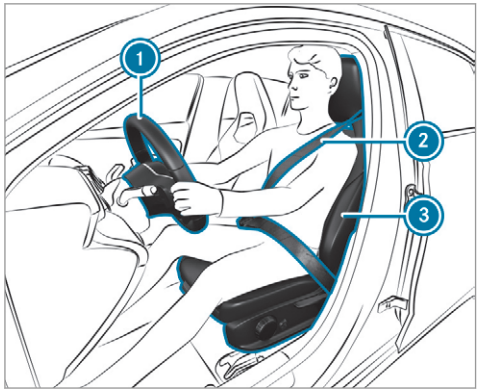

Ensure the following when adjusting the steering wheel (1), seat belt (2) and driver's seat (3):

- You are sitting as far away from the driver's airbag as possible, taking the following points into consideration.
- You are sitting in an upright position
- Your thighs are slightly supported by the seat cushion
- Your legs are not fully extended and you can depress the pedals properly
- The back of your head is supported at eye level by the centre of the head restraint
- You can hold the steering wheel with your arms slightly bent
- You can move your legs freely
- You can see all the displays on the instrument cluster clearly
- You have a good overview of the traffic conditions
- Your seat belt sits snugly against your body and passes across the centre of your shoulder and across your hips in the pelvic area

Notes on the height limit on the third row of seats



WARNING Risk of injury if height limit on the third row is not observed

If a person exceeds the permissible body size for the seats in the third row of seats, he or she may be injured through contact with the roof or parts of the vehicle interior.

For that reason, a person of the relevant height must not use the seats on the third row.

- Use a suitable vehicle seat.

The seats on the third row are approved only for people with a maximum height of 1.68 m. Observe the information regarding height on the information label.

Seats

Adjusting the front seat mechanically (without Seat Comfort Package)

WARNING Risk of becoming trapped if the seats are adjusted by children

Children could become trapped if they adjust the seats, particularly when unattended.

- When leaving the vehicle, always take the key with you and lock the vehicle. This also applies to the digital vehicle key if the "Digital Vehicle Key" function is activated via Mercedes me connect.
- Never leave children unattended in the vehicle.

WARNING Risk of becoming trapped during seat adjustment

When you adjust a seat, you or other vehicle occupants could become trapped, e.g. on the seat guide rail.

- Make sure when adjusting a seat that no one has any body parts in the sweep of the seat.

Observe the safety notes on "Airbags" and "Children in the vehicle".

WARNING Risk of accident due to the driver's seat not being engaged

The driver's seat may move unexpectedly while the vehicle is in motion.

This could cause you to lose control of the vehicle.

- Always make sure that the driver's seat is engaged before starting the vehicle.

⚠ WARNING Risk of accident due to adjusting vehicle settings while the vehicle is in motion

You could lose control of the vehicle in the following situations in particular:

- If you adjust the driver's seat, the head restraints, the steering wheel or the mirror while the vehicle is in motion.
- If you fasten your seat belt while the vehicle is in motion.

▶ Before starting the engine: adjust the driver's seat, the head restraints, the steering wheel and the mirror and fasten your seat belt.

⚠ WARNING Risk of becoming trapped if the seat height is adjusted carelessly

If you adjust the seat height carelessly, you or other vehicle occupants could be trapped and thereby injured.

Children in particular could accidentally press the electrical seat adjustment buttons and become trapped.

▶ While moving the seats, make sure that hands or other body parts do not get under the lever assembly of the seat adjustment system.

⚠ WARNING Risk of injury due to head restraints not being fitted or being adjusted incorrectly

If head restraints have not been installed or have not been adjusted correctly, there is an increased risk of injury in the head and neck area, e.g. in the event of an accident or when braking.

▶ Always drive with the head restraints fitted.

▶ Before driving off, make sure for every vehicle occupant that the centre of the head restraint supports the back of the head at about eye level.

Do not interchange the head restraints of the front and rear seats. Otherwise, you will not be able to adjust the height and angle of the head restraints correctly.

Adjust the head restraint fore-and-aft position so that it is as close as possible to the back of your head.

⚠ WARNING Risk of injury or death due to an incorrect seat position

The seat belt does not offer the intended level of protection if you have not moved the seat backrest to an almost vertical position.

You could slip beneath the seat belt and injure yourself.

▶ Adjust the seat properly before commencing your journey.

▶ Always ensure that the seat backrest is in an almost vertical position and that the shoulder belt is routed across the centre of your shoulder.

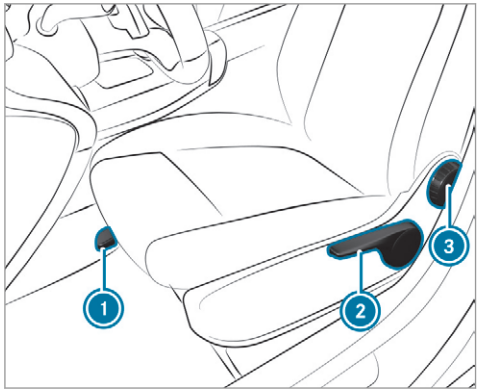

- **To adjust the seat fore-and-aft position:** lift lever (1) and slide the seat into the desired position.
- Make sure that the seat is engaged.
- **To adjust the seat height:** push or pull lever (2) until the desired position has been reached.
- **To adjust the seat backrest inclination:** turn handwheel (3) forwards and backwards until the desired position has been reached.

Adjusting the front seat mechanically (with Seat Comfort Package)

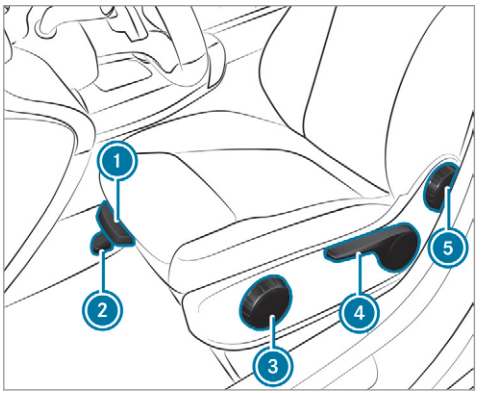

- **To adjust the seat cushion length:** lift lever (1) and slide the front section of the seat cushion forwards or backwards.
- **To adjust the seat fore-and-aft position:** lift lever (2) and slide the seat into the desired position.
- Make sure that the seat is engaged.
- **To adjust the seat cushion inclination:** turn handwheel (3) forwards and backwards until the desired position has been reached.
- **To adjust the seat height:** push or pull lever (4) until the desired position has been reached.
- **To adjust the seat backrest inclination:** turn handwheel (5) forwards and backwards until the desired position has been reached.

Adjusting the front seat electrically

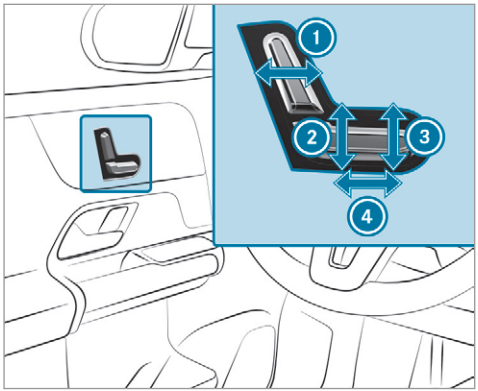

1 Seat backrest inclination
2 Seat height
3 Seat cushion inclination
4 Seat fore-and-aft position

▶ Save the settings with the memory function (⟶ page 113).

Adjusting the 4-way lumbar support

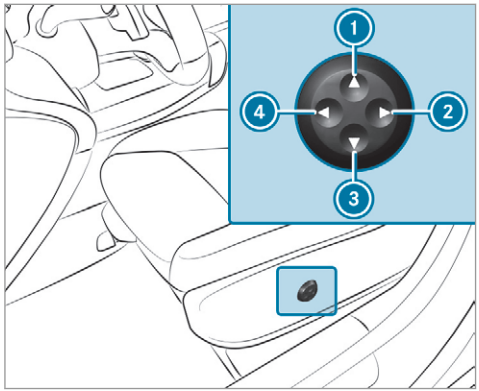

1 Higher
2 Softer
3 Lower
4 Firmer

▶ Using buttons 1 to 4, adjust the contour of the backrest individually to suit your back.

Adjusting rear seats mechanically

WARNING Risk of becoming trapped when adjusting the seats

When you adjust a seat, you may trap yourself or a vehicle occupant.

▶ When adjusting a seat, make sure that no one has any body parts in the sweep of the seat.

WARNING Risk of accident if the seat and seat backrest are not engaged

The seat and seat backrest can fold forwards.

There is a risk of the following, in particular:

- The vehicle occupant may be pressed against the seat belt. The seat belt cannot protect as intended and could cause additional injury.
- A child restraint system is no longer properly supported or positioned and can no longer fulfil its function as intended.

- The seat backrest cannot restrain objects or goods in the load compartment.

Always ensure that the seat and seat backrest are engaged, in particular:

- Before persons travel in the vehicle while sitting on a seat with the easy entry and exit feature
- After you have adjusted the seat
- After the easy entry and exit feature has been used
- After the load compartment enlargement has been folded forwards

WARNING Risk of injury when you adjust the rear seats while the vehicle is in motion

You or other vehicle occupants could be trapped and thereby injured.

▶ Adjust the rear seats before the engine is started.

NOTE Damage caused by objects in the footwell or behind the rear seats

When adjusting the fore-and-aft position, the rear seats and/or the object can be damaged.

▶ Stow objects in a suitable place.

The components of the rear bench seat can be moved. You can move the right-hand and left-hand part together with the centre part independently of each other. This allows you to make the footwell larger in either the second or third row of seats.



▶ Lift release handle 1 and slide the corresponding part of the bench seat into the desired position.
▶ Let go of release handle 1.
▶ Make sure that the seat is engaged.

Adjusting the rear seat backrests mechanically

WARNING Risk of injury due to seat backrest folded forwards

If the rear seat backrest is folded forwards, persons in the third row of seats could collide with parts of the seat adjustment mechanism, in particular in the event of an accident, sudden braking or an abrupt change of direction.

- If there is a person in the third row of seats, the rear seat in front of that person must be folded back into the driving position before starting the journey.
- People in the third row of seats must not place their legs on a rear seat backrest that has been folded forwards.

Always ensure that all vehicle occupants have their seat belts fastened correctly and are sitting properly. Particular attention must be paid to children.

If you no longer require the seat backrest to be folded down for loading or for getting in and out, fold it back into place.

WARNING Risk of becoming trapped if the seat is not engaged

The seat does not engage when folded forwards. The seat can fold backwards unexpectedly, e.g. when accelerating, braking or in the event of an abrupt change of direction or an accident.

People in the seat's sweep can become trapped.

- If a seat is folded forwards, always fold it back before driving off.
- Make sure that the seat is engaged.

Requirements:

- The area into which the seat is folded is clear.

You can fold the seat backrests on the second row of seats forwards for the following situations:

- For easier access to the load compartment
- Vehicles with a third row of seats: for getting in or out

You can move the seat backrest to different angles.

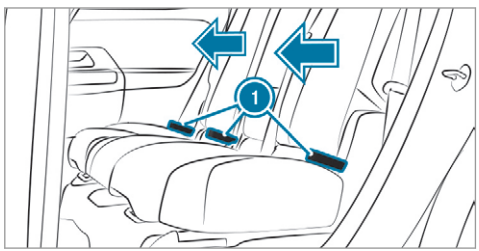

- **To set the seat backrest:** hold the seat backrest in place with your hand or back.
- Gently pull one of release loops (1) and fold the seat backrest forwards or backwards.
- Ensure that the seat backrest is engaged.

Folding the seat backrest forwards to enter the vehicle (vehicles with a third row of seats)

⚠ **WARNING** Risk of injury when folding the seat backrest on the second row of seats forwards

If the handle for the seat backrest on the second row of seats is pulled from the third row of seats, the seat backrest on the second row of seats will fold forwards and will not engage. People in the sweep of this seat backrest can become trapped.

- When getting out of the third row of seats, do not hold the seat backrest on the second row of seats.

Vehicles with EASY-ENTRY function: If a seat on the second row of seats is located in the EASY-ENTRY area, this will be shown on the multifunction display on the instrument cluster.

- If necessary, fold the seats on the third row into position (→ page 123).



- **To fold the seat backrest in the front position:** pull handle (1).
The seat backrest will fold forwards.

! **NOTE** Damage to the seat backrest handle caused by pulling

The handle can be damaged if it is used to pull the seat forwards.

- Move the seat forwards by the seat backrest.

- Move the seat forwards by the seat backrest. Hold the seat firmly in place while doing so.
- **To fold the seat backrest back into an upright position:** swing the seat backrest back until it engages.
The seat backrest will remain in the cargo position.
- Slide the seat backwards.
The seat will stop in the front position.
- Move the seat into the desired position (→ page 103).
- If necessary, fold in the seats on the third row (→ page 121).

ⓘ To increase the size of the luggage compartment, you can move the seat backrests into the luggage compartment floor position (→ page 118).

Head restraints

Adjusting the front seat head restraints manually

WARNING Risk of accident due to adjusting vehicle settings while the vehicle is in motion

You could lose control of the vehicle in the following situations in particular:

- If you adjust the driver's seat, the head restraints, the steering wheel or the mirror while the vehicle is in motion.
- If you fasten your seat belt while the vehicle is in motion.

▶ Before starting the engine: adjust the driver's seat, the head restraints, the steering wheel and the mirror and fasten your seat belt.

WARNING Risk of injury due to head restraints not being fitted or being adjusted incorrectly

If head restraints have not been installed or have not been adjusted correctly, there is an increased risk of injury in the head and neck area, e.g. in the event of an accident or when braking.

▶ Always drive with the head restraints fitted.

▶ Before driving off, make sure for every vehicle occupant that the centre of the head restraint supports the back of the head at about eye level.

Do not interchange the head restraints of the front and rear seats. Otherwise, you will not be able to adjust the height and angle of the head restraints correctly.

Adjust the head restraint fore-and-aft position so that it is as close as possible to the back of your head.

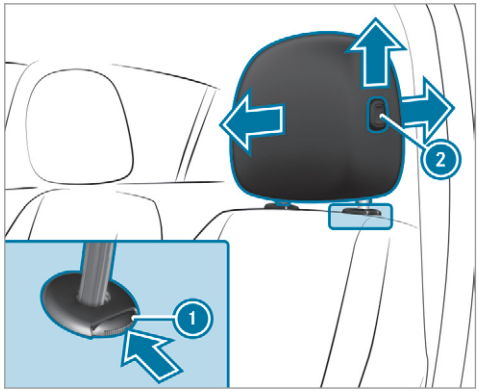

▶ **To raise:** pull the head restraint up.

▶ **To lower:** press release knob 1 in the direction of the arrow and push the head restraint down.

▶ **To move the driver's head restraint forwards:** press release knob 2 and pull the head restraint forwards.

- **To move the driver's head restraint backwards:** press release knob (2) and push the head restraint backwards.

Adjusting the head restraints of the rear seats mechanically

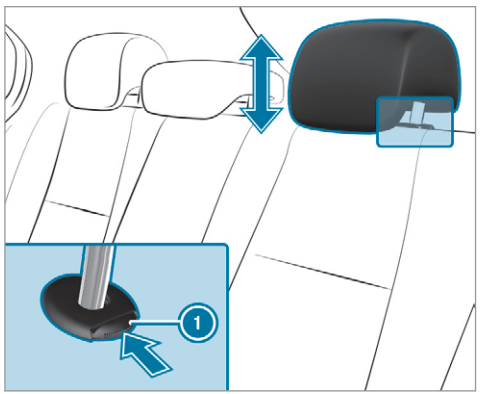

- **To raise:** pull the head restraint up.
- **To lower:** press release knob (1) in the direction of the arrow and push the head restraint down.
- **If the centre seat on the second row of seats is not occupied:** press the head restraint down all the way.

Vehicles with a third row of seats

The head restraints on the third row of seats have a usage position and a non-usage position. The usage position is the extended, top position in which the head restraint engages; the non-usage position is the bottom, retracted position of the head restraint. If the seats on the third row of seats are being used, the head restraint must be in the top, engaged usage position.

- **If the third row of seats is occupied:** move the head restraints to the very top and have them engage there.
- **If the third row of seats is not occupied:** move the head restraints to the very bottom.

Fitting/removing the rear seat head restraints

Removing

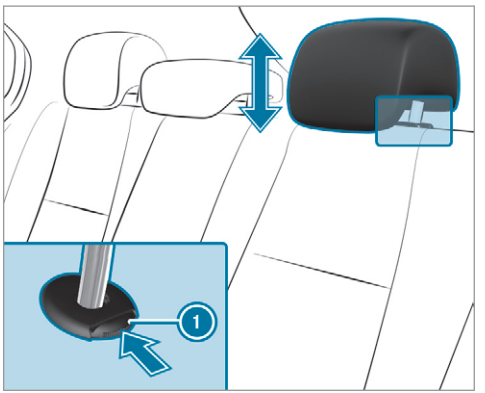

- Release the rear seat backrest and fold it forwards slightly (→ page 118).
- Pull the head restraint upwards as far as it will go.

- Push release knob (1) in the direction of the arrow and pull out the head restraint.

Fitting

- Insert the head restraint such that the notches on the bar are on the left when viewed in the direction of travel.
- Push the head restraint down until it engages.
- Fold the rear seat backrest back until it engages.

Configures the seat settings

Multimedia system:

→ ⌂ ▸▸ Comfort ▸▸ Seat comfort

Adjusting the backrest contour in the lumbar region of the seat backrest (lumbar)

- Select Lumbar.
- Select the settings ☼ for the desired seat.
- Adjust the air cushions.

Adjusting the backrest side bolsters

- Select Side bolsters.
- Adjust the air cushion for the desired seat.

Selecting the massage programme for the front seats

Multimedia system:

→ ⌂ ▸▸ Comfort ▸▸ Massage

- Select Wave Massage or Pulsating Massage.
- Start the program for the desired seat ▶.
- **To set the massage intensity: switch** High intensity on or off .

Resetting seat settings

Multimedia system:

→ ⌂ ▸▸ Comfort ▸▸ Seat comfort

- Select ↻ for the desired seat.
- Confirm the prompt.

Switching the seat heating on/off

⚠ **WARNING** Risk of burns due to repeatedly switching on the seat heater

Repeatedly switching on the seat heater can cause the seat cushion and seat backrest padding to become very hot.

The health of persons with limited temperature sensitivity or a limited ability to react to high temperatures may be affected or they may even suffer burn-like injuries.

- Do not repeatedly switch on the seat heater.

To protect against overheating, the seat heating may be temporarily deactivated after it is switched on repeatedly.

! **NOTE** Damage to the seats caused by objects or documents when the seat heater is switched on

When the seat heater is switched on, overheating may occur due to objects or docu-

ments placed on the seats e.g. seat cushions or child seats. This could cause damage to the seat surface.

▶ Make sure that no objects or documents are on the seats when the seat heater is switched on.

Requirements:

- The power supply is switched on.

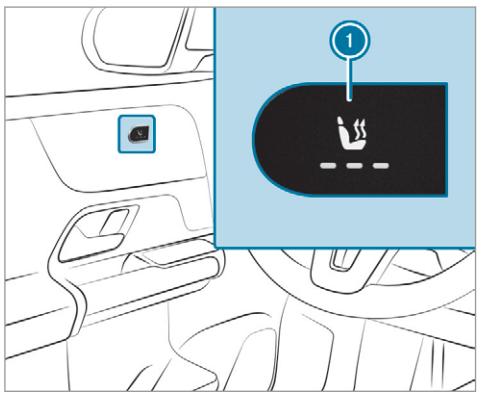

▶ Press button 1 repeatedly until the desired heating level is set.
Depending on the heating level, up to three indicator lamps will light up. If all indicator lamps are off, the seat heating is switched off.

ⓘ The seat heating will automatically switch down from the three heating levels after 8, 10 and 20 minutes until the seat heating switches off.

Switching the seat ventilation on/off

Requirements:

- The power supply is switched on.

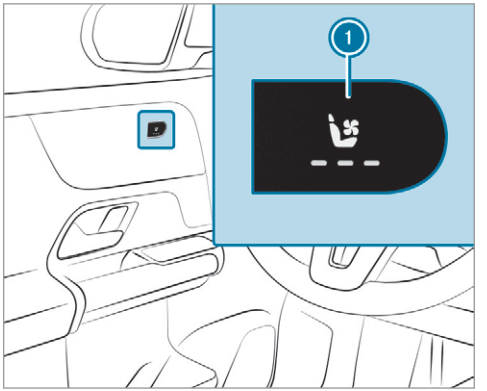

▶ Press button 1 repeatedly until the desired blower setting has been reached.
Depending on the blower setting, up to three indicator lamps will light up. If all indicator lamps are off, the seat ventilation is switched off.

Steering wheel

Adjusting the steering wheel mechanically

⚠ WARNING Risk of accident due to adjusting vehicle settings while the vehicle is in motion

You could lose control of the vehicle in the following situations in particular:

- If you adjust the driver's seat, the head restraints, the steering wheel or the mirror while the vehicle is in motion.
- If you fasten your seat belt while the vehicle is in motion.

▶ Before starting the engine: adjust the driver's seat, the head restraints, the steering wheel and the mirror and fasten your seat belt.

⚠ WARNING Risk of entrapment for children when adjusting the steering wheel

Children could injure themselves if they adjust the steering wheel.

▶ Never leave children unattended in the vehicle.

▶ When leaving the vehicle, always take the key with you and lock the vehicle. This also applies to the digital vehicle key if the "Digital Vehicle Key" function is activated via Mercedes me connect.

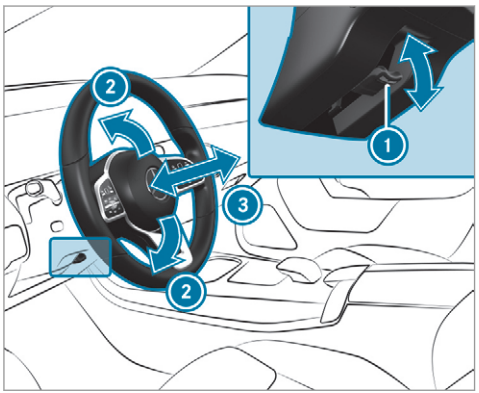

▶ **To unlock:** push release lever ① down as far as it will go.

▶ Adjust height ② and distance ③ to the steering wheel.

▶ **To lock:** push release lever ① up as far as it will go.

▶ Check and make sure that the steering column is locked by moving the steering wheel.

Switching the steering wheel heater on/off

Requirements:

- The ignition is switched on.

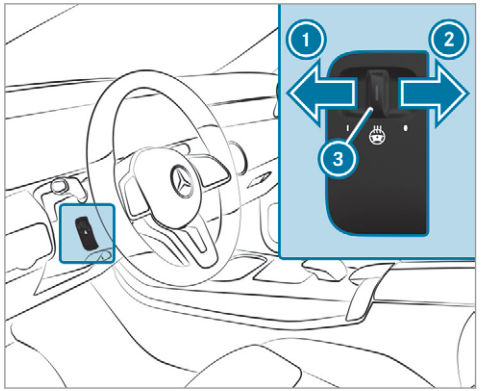

- Push the switch into position 1 or 2. If the indicator lamp 3 lights up, the steering wheel heater is switched on.

When you switch the ignition off, the steering wheel heater will switch off.

Easy entry and exit feature

Using the easy entry and exit feature

WARNING Risk of accident when pulling away during the adjustment process for the easy exit feature

You could lose control of the vehicle.

- Always wait until the adjustment process is complete before pulling away.

WARNING Risk of becoming trapped during adjustment of the easy entry and exit feature

You and other vehicle occupants – particularly children – could become trapped.

- Ensure that no-one has any body parts in the range of movement of the driver's seat.

If there is a risk of becoming trapped by the driver's seat:

- Press the seat adjustment switch. The adjustment process will be stopped.
- Never leave children unattended in the vehicle.
- When leaving the vehicle, always take the key with you and lock the vehicle. This also applies to the Digital Vehicle Key if the "Digital Vehicle Key" function is activated via Mercedes me connect.

You can stop the adjustment process by pressing one of the memory function position switches.

WARNING Risk of becoming trapped during activation of the easy entry and exit feature by children

If children activate the easy entry and exit feature, they can become trapped, particularly when unattended.

- Never leave children unattended in the vehicle.

▶ When leaving the vehicle, always take the key with you and lock the vehicle.

This also applies to the Digital Vehicle Key if the "Digital Vehicle Key" function is activated via Mercedes me connect.

When the easy entry and exit feature is active, the driver's seat will move backwards and the backrest will be moved to a steeper position when:

- You switch the ignition off with the driver's door open.
- You open the driver's door with the ignition switched off.

ⓘ The driver's seat will then move backwards only if it is not already in the rearmost position.
The seat backrest will then move forwards only if it is not already in the frontmost position.

The driver's seat will move back to the last drive position when:

- You switch the ignition on with the driver's door closed.
- You close the driver's door with the ignition switched on.

The last drive position will be saved when:

- You switch the ignition off.
- You call up the seat settings via the memory function.
- You save the seat settings via the memory function.

Setting the easy entry and exit feature

Multimedia system:

→ ⌂ ▸▸ Settings ▸▸ Vehicle ▸▸ Automatic seat adjustment ▸▸ Easy Entry/Exit

▶ Activate or deactivate the function.

Operating the memory function

⚠ **WARNING** Risk of an accident if the memory function is used while driving

If you use the memory function on the driver's side while driving, you could lose control of the vehicle as a result of the adjustments being made.

▶ Only use the memory function on the driver's side when the vehicle is stationary.

⚠ **WARNING** Risk of entrapment when setting the seat with the memory function

When the memory function adjusts the seat, you and other vehicle occupants – particularly children – could become trapped.

▶ During the adjustment process of the memory function, make sure that no one has any body parts in the sweep of the seat.

- If someone becomes trapped, press a preset position button or seat adjustment switch immediately.

WARNING Risk of entrapment if the memory function is activated by children

Children could become trapped if they activate the memory function, particularly when unattended.

- Never leave children unattended in the vehicle.
- When leaving the vehicle, always take the key with you and lock the vehicle.

This also applies to the Digital Vehicle Key if the "Digital Vehicle Key" function is activated via Mercedes me connect.

You can use the memory function when the ignition is switched off.

Storing

Seat adjustments for up to three people can be stored and called up using the memory function.

You can save settings for the following systems:

- Seat
- Seat contour
- Outside mirrors
- Head-up display

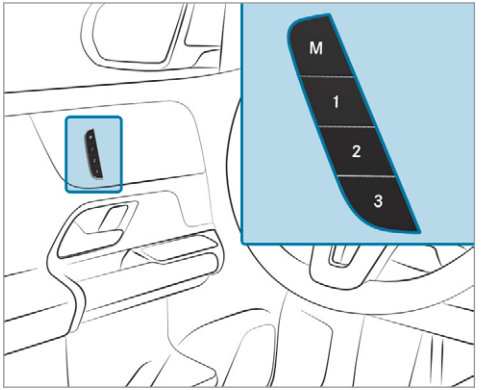

- Set the desired position for all systems.
- Briefly press the M memory button and then press preset position 1, 2 or 3 within three seconds.
- **To call up:** press and briefly hold one of preset position buttons 1, 2 or 3. After releasing the button, all systems are moved into the stored position.

Stowage areas

Notes on loading the vehicle

DANGER Risk of exhaust gas poisoning

Combustion engines emit poisonous exhaust gases such as carbon monoxide. Exhaust gases can enter the vehicle interior if the tailgate is open when the engine is running, especially if the vehicle is in motion.

- Always switch off the engine before opening the tailgate.
- Never drive with the tailgate open.

WARNING Risk of injury from unsecured items in the vehicle

If objects, luggage or loads are not secured or not secured sufficiently, they could slip, tip over or be thrown around and thereby hit vehicle occupants.

There is a risk of injury, particularly in the event of sudden braking or a sudden change in direction.

- Always stow objects in such a way that they cannot be thrown around.
- Before the journey, secure objects, luggage or loads against slipping or tipping over.

WARNING Risk of injury from inadequate stowage of objects

If you do not adequately stow objects in the vehicle interior, they could slip or be tossed around and thereby strike vehicle occupants. In addition, cup holders, open stowage spaces and mobile phone brackets cannot always restrain the objects they contain in the event of an accident.

There is a risk of injury, particularly in the event of sudden braking or a sudden change in direction.

- Always stow objects in such a way that they cannot be tossed around in these or similar situations.
- Always make sure that objects do not project from stowage spaces, luggage nets or stowage nets.
- Close all sealable stowage spaces before you start your journey.
- Stow and secure objects that are heavy, hard, pointed, sharp-edged, fragile or too large in the load compartment.

WARNING - Risk of accident or injury when using the cup holder while the vehicle is in motion

The cup holder cannot hold a container secure while the vehicle is in motion.

If you use a cup holder while the vehicle is in motion, the container may be flung around and liquids could be spilled. The vehicle occupants may come into contact with the liquid and if it is hot, they could be scalded. You could be distracted from traffic conditions and you may lose control of the vehicle.

- Only use the cup holder when the vehicle is stationary.
- Only use the cup holder for containers of the right size.
- Always close the container, particularly if the liquid is hot.

NOTE Damage to the cup holder

When the rear armrest is folded back the cup holder could become damaged.

- Only fold the rear armrest back when the cup holder is closed.

NOTE Damage to the rear armrest due to body weight

When folded out, the rear armrest can be damaged by body weight.

- Do not sit or support yourself on the rear seat armrest.

WARNING Risk of injury due to an open load compartment floor

If you drive with the load compartment floor open, objects could be flung around and hit vehicle occupants as a result. There is a risk of injury, particularly in the event of sudden braking or a sudden change in direction.

- Always close the load compartment floor before a journey.

WARNING Risk of burns due to hot audio amplifier

The audio amplifier and the area around the audio amplifier in the stowage space under the load compartment floor can get very hot. If you touch these car parts, you may suffer burns.

- Always take special care when the load compartment floor in the area around the audio amplifier is open.
- Allow the car parts to cool down before touching them.

WARNING - Risk of fire and injury from the hot cigarette lighter

You can burn yourself if you touch the hot heating element or the socket of the cigarette lighter.

In addition, flammable materials may ignite if:

- you drop the hot cigarette lighter
- a child holds the hot cigarette lighter to objects, for example

- Always hold the cigarette lighter by the knob.
- Always make sure that the cigarette lighter is out of reach of children.
- Never leave children unattended in the vehicle.

WARNING Risk of burns from the tailpipe and tailpipe trims

The exhaust tailpipe and tailpipe trims can become very hot. If you come into contact with these parts of the vehicle, you could burn yourself.

- Always be particularly careful around the tailpipe and the tailpipe trims and supervise children especially closely in this area.
- Allow vehicle parts to cool down before touching them.

The driving characteristics of your vehicle are dependent on the distribution of the load within the vehicle. You should bear the following in mind when loading the vehicle:

- never exceed the permissible gross mass or the permissible axle loads for the vehicle (including occupants).

  Information can be found on the vehicle identification plate (→ page 370).
- the load must not protrude above the upper edge of the seat backrests.
- always use the partition net when transporting objects in the load compartment.
- always place the load behind unoccupied seats if possible.
- secure the load using the tie-down eyes and distribute the load evenly.

Stowage spaces in the vehicle interior

Overview of the front stowage compartments

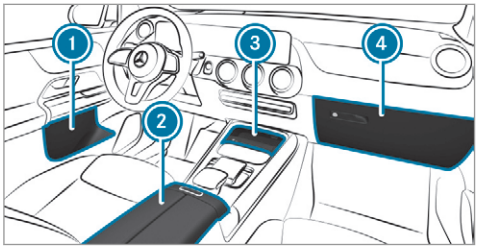

1. Stowage space in the doors
2. Stowage compartment in the armrest with a multimedia and USB connection

   Depending on the vehicle's equipment, there may be a 12 V socket in the stowage compartment
3. Stowage compartment in the front centre console with a USB connection and charging module for wireless charging of mobile phones
4. Glove compartment

Expanding the load compartment by folding the front-passenger seat backrest forwards

WARNING Risk of becoming trapped during seat adjustment

When you adjust a seat, you or other vehicle occupants could become trapped, e.g. on the seat guide rail.

- Make sure when adjusting a seat that no one has any body parts in the sweep of the seat.

Observe the safety notes on "Airbags" and "Children in the vehicle".

WARNING Risk of injury if the seat backrests are folded forwards

Rear passengers may come into contact with parts of the mechanical seat components.

- If the front passenger seat backrest is folded forwards and there is a passenger in the car, the passenger must sit in the rear seat behind the driver.

The backrest of the front-passenger seat can be folded forwards to increase the luggage compartment capacity.

Requirements:

- The rear seat behind the front-passenger seat backrest that is folded forwards and the rear centre seat are unoccupied.

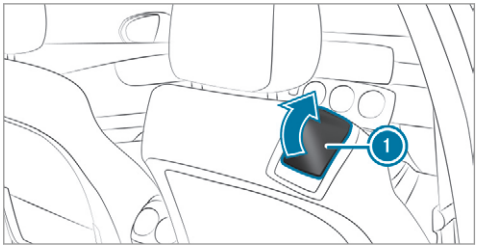

- **Folding forwards:** pull release handle (1) and fold the seat backrest fully forwards onto the sitting surface until it engages.
- **Folding back:** pull release handle (1) and pivot the seat backrest backwards until it engages.

Through-loading feature in the rear bench seat (EASY-PACK Quickfold)

Folding the rear seat backrest forwards

WARNING Risk of becoming trapped when adjusting the seats

When you adjust a seat, you may trap yourself or a vehicle occupant.

- When adjusting a seat, make sure that no one has any body parts in the sweep of the seat.

WARNING Risk of becoming trapped if the seat is not engaged

The seat does not engage when folded forwards. The seat can fold backwards unexpectedly, e.g. when accelerating, braking or in the event of an abrupt change of direction or an accident.

People in the seat's sweep can become trapped.

- ▶ If a seat is folded forwards, always fold it back before driving off.
- ▶ Make sure that the seat is engaged.

Always ensure that all vehicle occupants have their seat belts fastened correctly and are sitting properly. Particular attention must be paid to children.

If you no longer require the folded-down seat backrest as a loading area, fold the backrest back into place.

Requirements:

- The area into which the seat is folded is clear.
- The area under the rear bench seat is clear.
- The armrest on the second row of seats is folded back and the cup holders are empty.

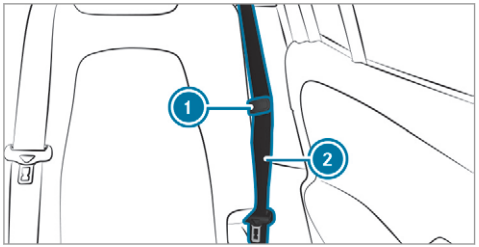

- ▶ Trap the seat belt strap on seat belt (2) in seat belt strap holder (1).

When the left-hand seat backrest is folded forwards, the centre seat backrest will also be folded forwards.

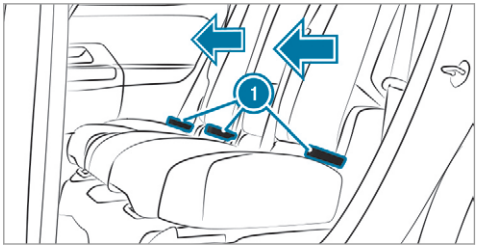

- ▶ Move the driver's or front passenger seat forwards, if necessary.
- ▶ If necessary, release the head restraints for the seat backrest and push them down (→ page 108).
- ▶ **Left and right seat backrests:** pull one of release loops (1).
  The seat backrest will automatically fold forwards.

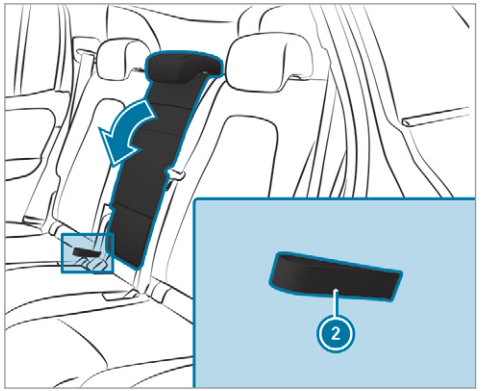

▶ **Centre seat backrest:** pull release loop (2). The seat backrest will automatically fold forwards.

ⓘ When the seat backrests on the second and third rows of seats are folded forwards, you can push the rear bench seat on the second row of seats back. This will then provide a continuous load compartment surface.

Ensure that the area between the rows of seats is clear.

Folding back the rear seat backrest

⚠ **WARNING** Risk of becoming trapped when adjusting the seats

When you adjust a seat, you may trap yourself or a vehicle occupant.

▶ When adjusting a seat, make sure that no one has any body parts in the sweep of the seat.

⚠ **WARNING** Risk of accident if the rear bench seat, rear seat and seat backrest are not engaged

The rear bench seat, rear seat and seat backrest may fold forwards, even while the vehicle is in motion.

- As a result, the vehicle occupant will be pressed into the seat belt with increased force. The seat belt will not be able to protect as intended and could cause additional injury.
- Objects or loads in the boot or load compartment cannot be restrained by the seat backrest.

▶ Make sure that the rear bench seat, the rear seat and the seat backrest are engaged before every trip.

! **NOTE** Damage caused by trapping the seat belt when folding back the seat backrest

The seat belt could become trapped and thus be damaged when the seat backrest is folded back.

▶ Make sure that the seat belt is not trapped when folding back the seat backrest.

If the left and centre seat backrests have been folded forwards together, fold the left seat backrest back first.

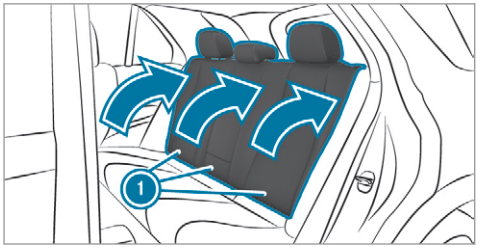

- ▶ Move the driver's or front passenger seat forwards, if necessary.
- ▶ Swivel seat backrest (1) back until it engages.
  The seat backrest will remain in the cargo position.
- ▶ After the seat backrest has been folded back, check the position of the head restraint and set it to the correct position (→ page 108).

Folding the seat backrest on the third row of seats forwards

⚠ **WARNING** Risk of becoming trapped when adjusting the seats

When you adjust a seat, you may trap yourself or a vehicle occupant.

- ▶ When adjusting a seat, make sure that no one has any body parts in the sweep of the seat.

⚠ **WARNING** Risk of accident if the seat and seat backrest are not engaged

The seat and seat backrest can fold forwards.

There is a risk of the following, in particular:

- The vehicle occupant may be pressed against the seat belt. The seat belt cannot protect as intended and could cause additional injury.
- A child restraint system is no longer properly supported or positioned and can no longer fulfil its function as intended.
- The seat backrest cannot restrain objects or goods in the load compartment.

Always ensure that the seat and seat backrest are engaged, in particular:

- Before persons travel in the vehicle while sitting on a seat with the easy entry and exit feature
- After you have adjusted the seat
- After the easy entry and exit feature has been used
- After the load compartment enlargement has been folded forwards

⚠ **WARNING** Risk of injury due to seat backrest folded forwards

If the rear seat backrest is folded forwards, persons in the third row of seats could collide with parts of the seat adjustment mech-

anism, in particular in the event of an accident, sudden braking or an abrupt change of direction.

- ▶ If there is a person in the third row of seats, the rear seat in front of that person must be folded back into the driving position before starting the journey.
- ▶ People in the third row of seats must not place their legs on a rear seat backrest that has been folded forwards.

Always ensure that all vehicle occupants have their seat belts fastened correctly and are sitting properly. Particular attention must be paid to children.

If you no longer require the folded-down seat backrest as a loading area, fold the backrest back into place.

You can fold the front seat backrests and the seat backrests on the second row of seats forwards to get in or out.

⚠ WARNING Risk of becoming trapped if the seat is not engaged

The seat does not engage when folded forwards. The seat can fold backwards unexpectedly, e.g. when accelerating, braking or in the event of an abrupt change of direction or an accident.

People in the seat's sweep can become trapped.

- ▶ If a seat is folded forwards, always fold it back before driving off.
- ▶ Make sure that the seat is engaged.

Requirements:

- The area into which the seat is folded is clear.
- The area under the third row of seats is clear.
- The cup holders are empty when the seat backrests on the third row of seats are folded forwards.
- The load compartment cover is removed when the seat backrests on the second row of seats are folded forwards.

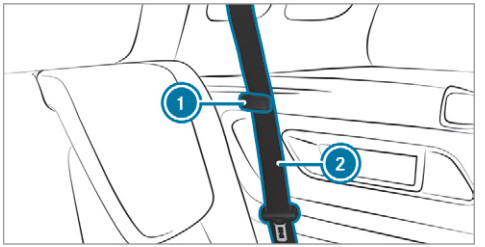

- ▶ Trap the seat belt strap on seat belt (2) in seat belt strap holder (1).

! NOTE Damage to the release loops due to the attachment of objects

The release loops of the seat backrests in the rear may be damaged due to the attachment of objects.

- ▶ Only attach objects to the tie-down eyes.

The release loops are located in the load compartment to the side of the bottom part of the seat backrests.

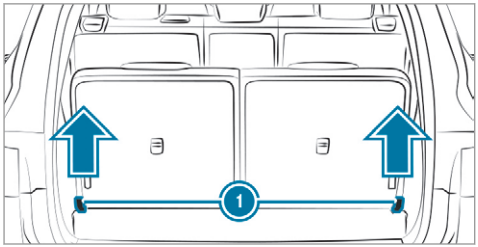

Release loops on the rear sides

- ▶ Move the second row of seats forwards and move the seat backrests into the cargo position (→ page 124).
- ▶ Release the head restraints on the third row of seats and push them down (→ page 108).
- ▶ Pull one of red release loops (1). The seat backrest will automatically fold forwards.
- ▶ Push the seat backrest down until it engages.

ⓘ When the seat backrests on the second and third rows of seats are folded forwards, you can push the rear bench seat on the second row of seats back. This will then provide a continuous load compartment surface. Ensure that the area between the rows of seats is clear.

Folding back the seat backrest on the third row of seats

⚠ **WARNING** Risk of becoming trapped when adjusting the seats

When you adjust a seat, you may trap yourself or a vehicle occupant.

▶ When adjusting a seat, make sure that no one has any body parts in the sweep of the seat.

⚠ **WARNING** Risk of accident if the rear bench seat, rear seat and seat backrest are not engaged

The rear bench seat, rear seat and seat backrest may fold forwards, even while the vehicle is in motion.

- As a result, the vehicle occupant will be pressed into the seat belt with increased force. The seat belt will not be able to protect as intended and could cause additional injury.
- Objects or loads in the boot or load compartment cannot be restrained by the seat backrest.

▶ Make sure that the rear bench seat, the rear seat and the seat backrest are engaged before every trip.

! **NOTE** Damage caused by trapping the seat belt when folding back the seat backrest

The seat belt could become trapped and thus be damaged when the seat backrest is folded back.

▶ Make sure that the seat belt is not trapped when folding back the seat backrest.

Requirements:

- The seats and the seat backrests on the second row of seats have been moved forwards sufficiently.

! NOTE Damage to the release loops due to the attachment of objects

The release loops of the seat backrests in the rear may be damaged due to the attachment of objects.

▶ Only attach objects to the tie-down eyes.

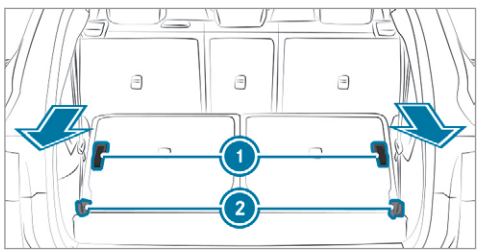

Loops on the rear sides

▶ Briefly pull one of red release loops 2.

▶ **Folding the left and right seat backrests back:** pull one of black release loops 1.

Adjusting the angle of the rear seat backrests (cargo position)

To enlarge the load compartment, you can move the seat backrests on the second row of seats into a steeper angle (cargo position).

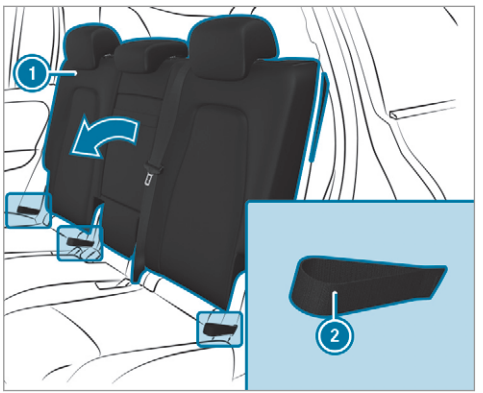

▶ **Setting the seat backrest:** hold the seat backrest 1 in place with your hand or back.

▶ Gently pull one of the release loops 2 and fold the seat backrest forwards.

Load compartment cover

Notes on the load compartment cover

⚠ WARNING Risk of injury or death due to poorly secured objects

The load compartment cover alone cannot secure or restrain heavy objects, items of luggage or heavy loads.

You could be hit by an unsecured load, particularly in the event of abrupt changes in direction, sudden braking or an accident.

▶ Always stow objects in such a way that they cannot be thrown around.

▶ Secure objects, luggage or loads against slipping or tipping over, e.g. by using lashing material, even if you are using the load compartment cover.

NOTE Damage to the load compartment cover when loading the vehicle

The load compartment cover may be damaged when the vehicle is being loaded.

- Do not place any objects above the lower edge of the side windows or on the load compartment cover.

Vehicles with a third row of seats: when the third row of seats is in use, the load compartment cover on the seat backrests on the second row of seats is removed.

Extending/retracting the load compartment cover

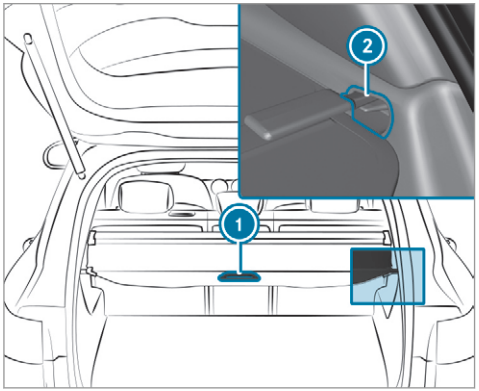

- **To extend:** pull the load compartment cover back by grab handle (1) and clip it into the holders on the left and right (2).

Retracting

- Unhook the load compartment cover from holders on the left and right (2) and guide it forwards by grab handle (1) until it is fully retracted.

Fitting or removing the load compartment cover
Requirements:

- The load compartment cover is rolled up.

Removing the load compartment cover

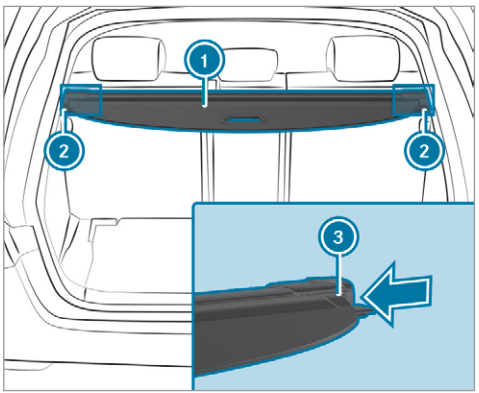

- Press in the end cap of the load compartment cover (1) on the right- and left-hand side in the direction of the arrow using the handle on the lower edge (3).
- Push the load compartment cover (1) into the anchorage (2) on the opposite side.
- Take the load compartment cover (1) out by pulling it upwards.

Fitting the load compartment cover

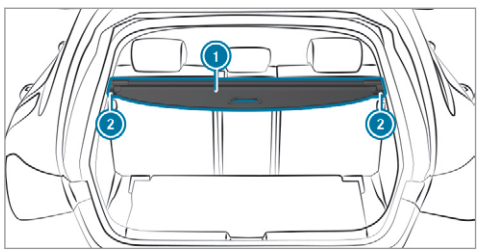

- Place the load compartment cover (1) in the anchorage (2) on the right- or left-hand side.
- Press in the end cap of the load compartment cover (1) on the opposite side and insert the load compartment cover (1) into the other anchorage (2).

Attaching/removing the partitioning net

WARNING Risk of injury or death due to poorly secured objects

The partitioning net alone cannot secure or restrain heavy objects, items of luggage or heavy loads.

You could be hit by an unsecured load, particularly in the event of abrupt changes in direction, sudden braking or an accident.

- Always stow objects in such a way that they cannot be thrown around.
- Secure objects, luggage or loads against slipping or tipping over, e.g. by using lashing material, even if you are using the partitioning net.

For safety reasons, always use a partitioning net when transporting a load.

Damaged partitioning nets can no longer fulfil their functions and must be replaced. Visit a qualified specialist workshop.

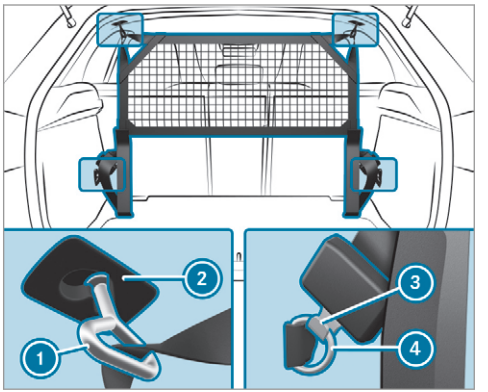

Partitioning net without load compartment enlargement

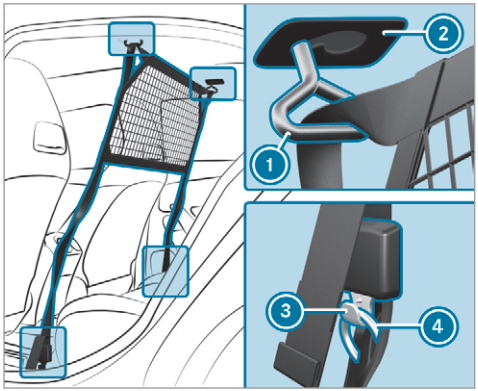

Partitioning net with load compartment enlargement

- **To attach:** Attach partitioning net (1) to brackets (2) on the left and right of the roof lining.
- Without load compartment enlargement: attach hooks (3) to tie-down eyes (4) on the left and right in such a way that hooks (3) point backwards.
- With load compartment enlargement: attach hooks (3) to tie-down eyes (4) on the left and right in such a way that hooks (3) point to the door.
- Pull on the loose ends of the lashing straps at the same time until the partitioning net (1) is tight and the top edge of partitioning net (1) is horizontal.

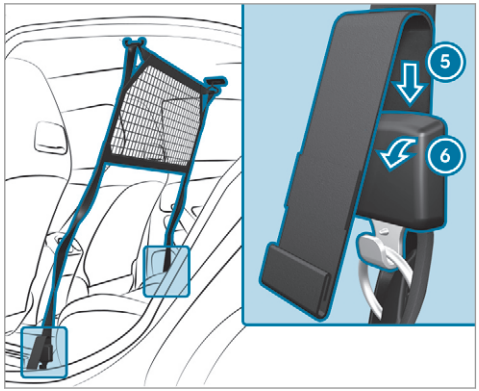

- **To remove:** turn the buckle of the lashing strap in the direction of arrow (6).
- Slide the loose end of the lashing strap into the buckle in the direction of arrow (5) until the lashing straps are loose.
- Remove hooks (3) from tie-down eyes (4) on the left and right.
- Remove partitioning net (1) from brackets (2) on the roof lining on the left and right.

Overview of the tie-down eyes

Observe the notes on loading the vehicle (→ page 114).

! NOTE Damage to the release loops due to the attachment of objects

The release loops of the seat backrests in the rear may be damaged due to the attachment of objects.

- Only attach objects to the tie-down eyes.

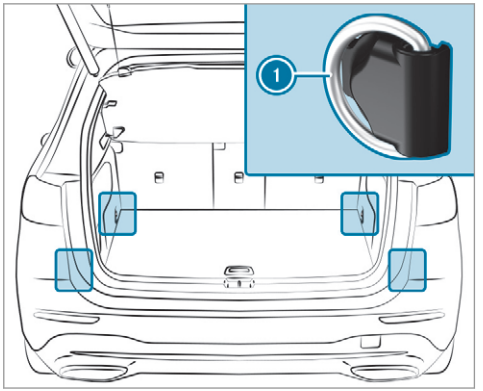

1 Tie-down eyes (vehicles with through-loading feature in the rear bench seat)

Overview of bag hooks

⚠ WARNING Risk of injury when using bag hooks with heavy objects

The bag hooks cannot restrain heavy objects or items of luggage.

Objects or items of luggage may be flung around and hit vehicle occupants.

- Only hang light objects on the bag hooks.
- Never hang hard, sharp-edged or fragile objects on the bag hooks.

Observe the notes on loading the vehicle (→ page 114).

Subject the bag hooks to a maximum load of 3 kg and do not attach any goods to them.

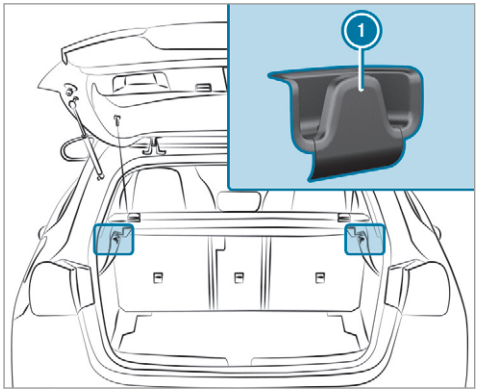

① Bag hook

Overview of clothes hooks on the tailgate

Observe the notes on loading the vehicle (→ page 114).

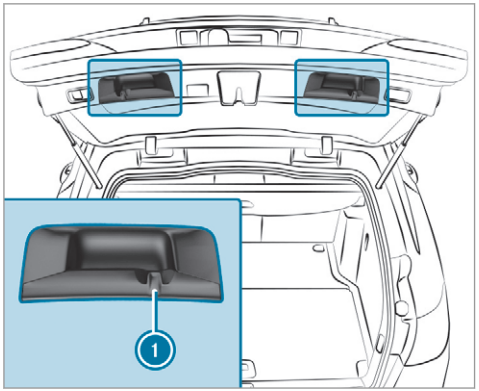

① Clothes hook

Clothes hooks are not suitable for hanging heavy objects as this can cause the tailgate to lower automatically. Use the clothes hooks only for light objects such as jackets.

Adjustable load compartment floor

The load compartment can be made larger or smaller depending on requirements. To this end, you can lock the load compartment floor at two different heights. The higher position provides a flat surface when the rear seat backrests are folded forward. Furthermore, you can remove a bracket at the rear to create additional space lengthways.

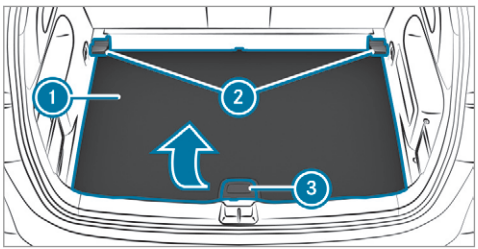

▶ **Adjusting the height:** Lift the load compartment floor ① (in the bottom position in the example) only slightly using the handle ③ and pull it towards you.

- Insert load compartment floor (1) into rear fixtures (2).
- Fold load compartment floor (1) down.

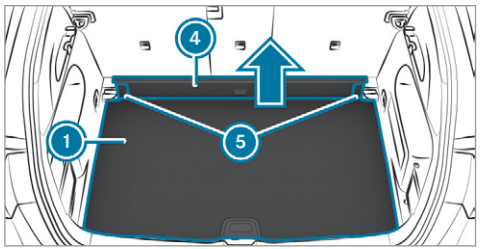

- **Adjusting the length:** Fold the seat backrests in the rear forward slightly.
- Make sure that load compartment floor (1) is engaged in the lower position.
- Press a release catch (5) and remove bracket (4) upwards.

NOTE Damage to the load compartment floor

If the load compartment floor is loaded in the upper position and the bracket has been removed, the load compartment floor may be damaged.

- Make sure that the load compartment floor is not loaded in the upper position when the bracket has been removed.

Attaching a roof luggage rack

WARNING Risk of accident due to exceeding the maximum roof load

The vehicle centre of gravity and the usual driving characteristics as well as the steering and braking characteristics alter.

If you exceed the maximum roof load, the driving characteristics, as well as steering and braking, will be greatly impaired.

- Never exceed the maximum roof load and adjust your driving style.

You will find information on the maximum roof load in the "Technical data" section.

NOTE Damage to the panorama sliding sunroof due to non-approved roof luggage racks

The panorama sliding sunroof may be damaged by the roof luggage rack if you attempt to open it when using a roof luggage rack not tested and approved for Mercedes-Benz.

- When a roof luggage rack is fitted, open the panorama sliding sunroof only if this has been tested and approved for Mercedes-Benz.

The panorama sliding sunroof may be raised to allow ventilation of the vehicle interior.

- Secure the roof luggage rack to the roof railing.
- Observe the manufacturer's installation instructions.

Sockets

Using the 12 V socket

Requirements:

- Only devices up to a maximum of 180 W (15 A) are permissible.

Depending on the vehicle equipment, the vehicle has the following 12 V sockets:

- In the stowage compartment in the front centre console
- In the stowage compartment under the front armrest
- In the load compartment

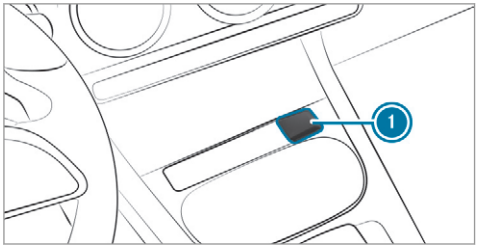

Example: 12 V socket in the stowage compartment in the front centre console

- ▶ Fold up socket cap (1).
- ▶ Insert the plug of the device.

12 V socket in the stowage compartment with cover: if you have connected a device to the 12 V socket, leave the cover of the stowage compartment open.

Using the 115 V socket in the rear passenger compartment

⚠ **DANGER** Risk of fatal injury due to damaged connecting cables or sockets

You could receive an electric shock if the connecting cable or the 115 V power socket is pulled out of the trim or is damaged or wet.

- ▶ Use only connecting cables that are dry and free of damage.
- ▶ When the ignition is switched off, make sure that the 115 V power socket is dry.
- ▶ Immediately have the 115 V power socket checked or replaced at a qualified specialised workshop if it is damaged or has been pulled out of the trim.
- ▶ Never plug the connecting cable into a 115 V power socket that is damaged or has been pulled out of the trim.

DANGER Risk of fatal injury due to incorrect handling of the socket

You could receive an electric shock in particular:

- if you reach into the socket.
- if you insert unsuitable devices or objects into the socket.

- ▶ Do not reach into the socket.
- ▶ Only connect suitable devices to the socket.

Requirements:

- Devices are equipped with a suitable plug which conforms to the standards specific to the country you are in.
- A device up to a maximum of 150 W (1.3 A) is used.
- Do not use multiple socket outlets.

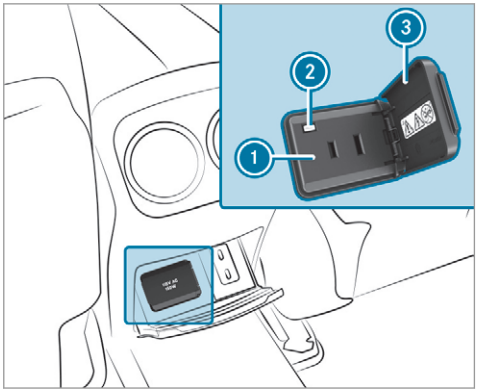

- ▶ Open flap (3).
- ▶ Insert the plug of the device into 115 V socket (1).
  When the on-board electrical system voltage is sufficient, indicator lamp (2) lights up.

Using the 230 V socket in the rear passenger compartment

DANGER Risk of fatal injury due to damaged connecting cables or sockets

You could receive an electric shock if the connecting cable or the 230 V power socket is pulled out of the trim or is damaged or wet.

- ▶ Use only connecting cables that are dry and free of damage.
- ▶ When the ignition is switched off, make sure that the 230 V power socket is dry.
- ▶ Immediately have the 230 V power socket checked or replaced at a qualified specialised workshop if it is damaged or has been pulled out of the trim.
- ▶ Never plug the connecting cable into a 230 V power socket that is damaged or has been pulled out of the trim.

DANGER Risk of fatal injury due to incorrect handling of the socket

You could receive an electric shock in particular:

- if you reach into the socket.
- if you insert unsuitable devices or objects into the socket.

▶ Do not reach into the socket.

▶ Only connect suitable devices to the socket.

Requirements:

- Devices are equipped with a suitable plug which conforms to the standards specific to the country you are in.
- A device up to a maximum of 150 W (0.65 A) is used.
- Do not use multiple socket outlets.

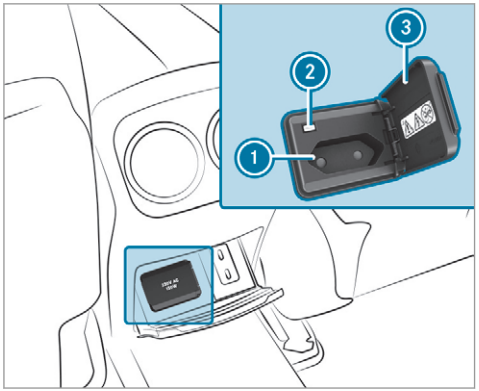

▶ Open flap (3).

▶ Insert the plug of the device into 230 V socket (1).
When the on-board electrical system voltage is sufficient, indicator lamp (2) lights up.

Overview of USB ports

Depending on the vehicle equipment, the vehicle has the following USB ports:

- in the stowage compartment of the cockpit armrest (→ page 117)
- in the front centre console next to the mobile phone stowage compartment
- In the rear centre console
- vehicles with three seat rows: in the side stowage compartment of the load compartment

ⓘ Depending on the vehicle equipment, the design of the stowage compartment and the number of USB ports in the rear centre console may vary.

If the ignition is switched on you can charge a USB device, e.g. a mobile phone, at USB ports using a suitable charging cable.

Wireless charging of the mobile phone and connection with the exterior aerial

Notes on wirelessly charging the mobile phone

WARNING Risk of injury due to objects being stowed incorrectly

If objects in the vehicle interior are stowed incorrectly, they can slide or be thrown around and hit vehicle occupants. In addition, cup holders, open stowage spaces and mobile phone receptacles cannot always retain all objects within.

There is a risk of injury, particularly in the event of sudden braking or a sudden change in direction.

- Always stow objects so that they cannot be thrown around in such situations.
- Always make sure that objects do not protrude from stowage spaces, luggage nets or stowage nets.
- Close the lockable stowage spaces before starting a journey.
- Always stow and secure heavy, hard, pointed, sharp-edged, fragile or bulky objects in the boot/load compartment.

Observe the notes on loading the vehicle.

WARNING Risk of fire from placing objects in the mobile phone stowage compartment

Placing other objects in the mobile phone stowage compartment could constitute a fire hazard.

- Apart from a mobile phone, do not place any other objects in the mobile phone stowage compartment, especially those made of metal.

NOTE Damage to objects caused by placing them in the mobile phone stowage compartment

If objects are placed in the mobile phone stowage compartment, they may be damaged by electromagnetic fields.

- Do not place credit cards, data storage devices, ski passes or other objects sensitive to electromagnetic fields in the mobile phone stowage compartment.

NOTE Damage to the mobile phone stowage compartment caused by liquids

If liquids enter the mobile phone stowage compartment, the compartment may be damaged.

- Ensure that no liquids enter the mobile phone stowage compartment.

The following notes on wirelessly charging the mobile phone must be observed:

- Depending on the vehicle equipment, the mobile phone is connected to the vehicle's exterior aerial via the charging module.
- The charging function and wireless connection of the mobile phone to the vehicle's exterior aerial are only available if the ignition is switched on.
- Small mobile phones may not be able to be charged in every position of the mobile phone stowage compartment.
- Large mobile phones which do not rest flat in the mobile phone stowage compartment may not be able to be charged or connected with the vehicle's exterior aerial.
- The mobile phone may heat up during the charging process. This may particularly depend on the applications (apps) currently open in the background.
- To ensure more efficient charging and connection with the vehicle's exterior aerial, remove the protective cover from the mobile phone. Protective covers which are necessary for wireless charging are excluded.

Wirelessly charging a mobile phone

Requirements:

- The mobile phone is suitable for wireless charging. You can find a list of compatible mobile phones at:

  https://www.mercedes-benz-mobile.com

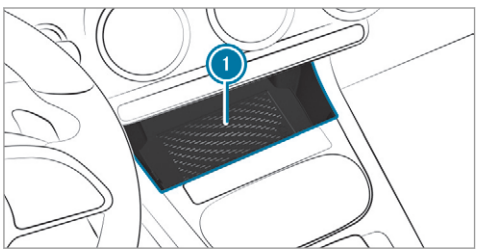

▶ Place the mobile phone as close to the centre of the marked surface on mat 1 as possible with the display facing upwards. When a message is shown in the multimedia system, the mobile phone is being charged.

Malfunctions during the charging process are shown in the media display.

ⓘ The mat can be removed for cleaning, e.g. using clean, lukewarm water.

Stowage compartment without cover

Make sure the mobile phone is properly stored and secured to prevent it from falling out while you are driving.

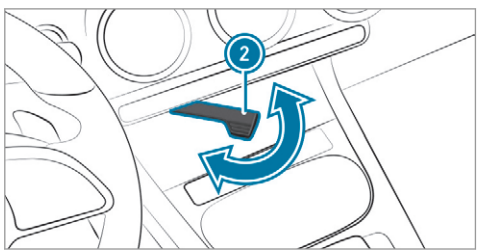

- **To secure the mobile phone:** swing lever (2) out.

Radio type approval numbers for Brazil

This device operates on a secondary basis, that is to say it has no protection against harmful interference, not even from the same type of stations, and must not cause interference with systems operating on a primary basis.

This product is permitted in accordance with the procedure defined in Directive 242/2000 by the Brazilian telecommunications agency ANATEL and meets the applicable technical requirements.

Further information is available on the ANATEL website. www.anatel.gov.br

- Further information on the declaration of conformity for vehicle components which receive and/or transmit radio waves.

Fitting/removing the floor mats

WARNING Risk of accident due to objects in the driver's footwell

Objects in the driver's footwell may impede pedal travel or block a depressed pedal.

This jeopardises the operating and road safety of the vehicle.

- Stow all objects in the vehicle securely so that they cannot get into the driver's footwell.
- Always fit the floor mats securely and as prescribed in order to ensure that there is always sufficient room for the pedals.
- Do not use loose floor mats and do not place floor mats on top of one another.

Installing floor mats

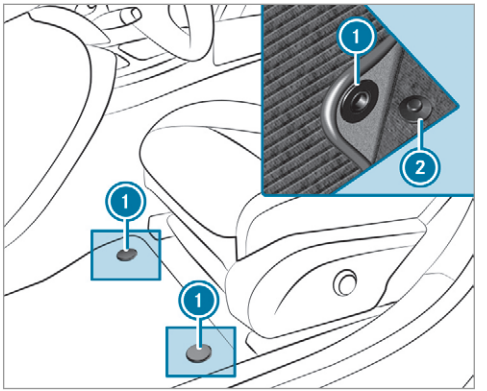

- Slide the corresponding seat backwards and lay the floor mat in the footwell.
- Press the studs (1) onto the holders (2).
- Adjust the corresponding seat.

Removing floor mats

- **To remove:** pull the floor mat off the holders (2).
- Remove the floor mat.

Exterior lighting

Notes on changing the lights when driving abroad

It is not necessary to adjust the headlamps. The legal requirements are also met in countries in which traffic drives on the other side of the road.

Information about lighting systems and your responsibility

The various lighting systems of the vehicle are only aids. The driver of the vehicle is responsible for correct vehicle illumination in accordance with the prevailing light and visibility conditions, legal requirements and traffic situation.

Light switch

Operating the light switch

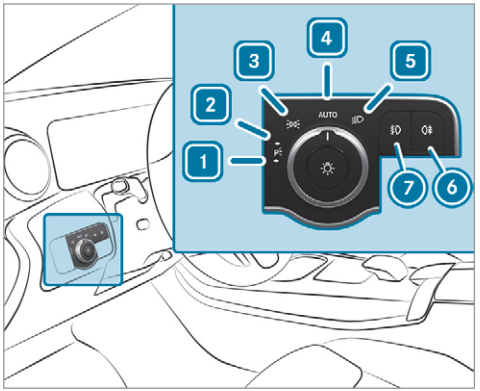

1 Left-hand parking lights
2 Right-hand parking lights
3 Standing lights and licence plate lighting
4 AUTO Automatic driving lights (preferred light switch position)
5 Low beam / high beam
6 Switches the rear fog light on/off
7 Switches the front fog lamp on/off

When low beam is activated, the indicator lamp for the standing lights will be deactivated and replaced by the low-beam indicator lamp.

▶ Always park your vehicle safely using sufficient lighting, in accordance with the relevant legal stipulations.

! NOTE Battery discharging by operating the standing lights

Operating the standing lights over a period of hours puts a strain on the battery.

▶ Where possible, switch on the right or left parking light.

In the event of severe battery discharging, the standing lights or parking lights will be switched off automatically to facilitate the next engine start.

The exterior lighting (except standing and parking lights) will switch off automatically when the driver's door is opened.

- Observe the notes on surround lighting (→ page 146).

Automatic driving lights function

The standing lights, low beam and daytime running lights are switched on automatically depending on the ignition status and the light conditions.

⚠ **WARNING** Risk of accident when the dipped beam is switched off in poor visibility

When the light switch is set to AUTO, the dipped beam may not be switched on automatically if there is fog, snow or other causes of poor visibility such as spray.

▶ In such cases, turn the light switch to .

The automatic driving lights are only an aid. You are responsible for vehicle lighting.

Switching the rear fog lights on or off

Requirements:

- The light switch is in the or AUTO position.

▶ Press the button.

Please observe the country-specific laws on the use of rear fog lamps.

Adjusting the headlamp range (halogen headlamps)

The headlamp range adjuster allows you to adjust the cone of light from the headlamps in relation to the vehicle's load condition.

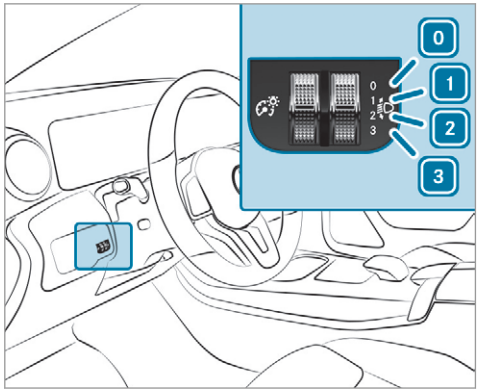

0 Driver's seat and front passenger seat occupied

1 Driver's seat, front passenger seat and rear seats occupied

2 Driver's seat, front passenger seat and rear seats occupied, load compartment laden

3 Driver's seat and front passenger seat occupied and maximum permissible rear axle load utilised

- Turn the headlamp range adjuster to the position that corresponds to the load condition of your vehicle.

Operating the combination switch for the lights

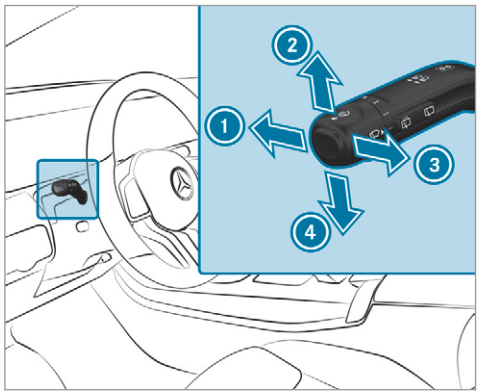

1. High beam
2. Turn signal light, right
3. Headlamp flashing
4. Turn signal light, left

- Use the combination switch to activate the desired function.

High beam

- **To switch on:** turn the light switch to the [≡D] or [AUTO] position.
- Push the combination switch in the direction of arrow 1.
  When the high beam is activated, the indicator lamp for low beam [≡D] will be deactivated and replaced by the indicator lamp for high beam [≡D].
- **To switch off:** push the combination switch in the direction of arrow 1 or pull it in the direction of arrow 3.

Headlamp flashing

- Pull the combination switch in the direction of arrow 3.

Turn signal indicator

- **To indicate briefly:** push the combination switch briefly to the point of resistance in the direction of arrow 2 or 4.
  The corresponding turn signal light will flash three times.
- **To indicate permanently:** push the combination switch beyond the point of resistance in the direction of arrow 2 or 4.

  Vehicles with Active Lane Change Assist:
  - Indicator operation activated by the driver can extend for the duration of the lane change.
  - If the driver indicated directly beforehand but a lane change was not immediately possible, the turn signal indicator may activate automatically.

Activating/deactivating the hazard warning lights

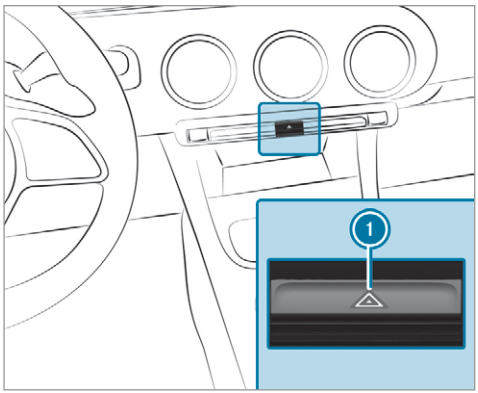

▶ Press button 1.

The hazard warning lights will switch on automatically if:

- the airbag has been deployed.
- the vehicle is heavily braked from a speed of more than 70 km/h to a standstill.

When you pull away again, the hazard warning light system will switch off automatically at approximately 10 km/h. You can also switch off the hazard warning light system using button 1.

Adaptive functions, MULTIBEAM LED

Intelligent Light System function

The MULTIBEAM LED headlamps adapt to the driving and weather situation and provide extended functions for improved illumination of the road.

The system comprises the following functions:

- Active headlamps (→ page 141)
- Cornering light (→ page 142)
- Motorway mode (→ page 142)
- City lighting (→ page 142)
- Off-road light (→ page 142)

System limits

- The system is active only when it is dark.

Active headlamps function

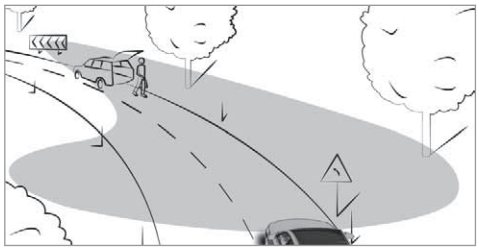

Functions of the active headlamps:

- The headlamps follow the steering movements.
- Relevant areas are better illuminated during a journey.

The functions are active when the high beam is switched on.

Cornering light function

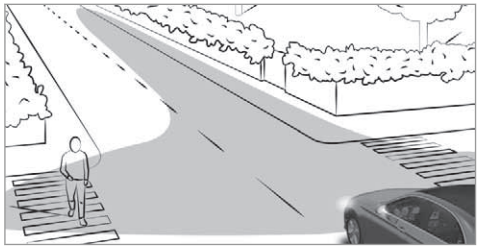

The cornering light improves the illumination of the carriageway over a wide angle in the turning direction, enabling better visibility on tight bends, for example. It can be activated only when the low beam is switched on.

The function is active in the following cases:

- At speeds below 40 km/h when the turn signal light is switched on or the steering wheel is turned
- At speeds between 40 km/h and 70 km/h and when the steering wheel is turned

Roundabout and junction function: the cornering light will be activated on both sides based on an evaluation of the vehicle's current GPS position. It will remain active until after the vehicle has left the roundabout or the junction.

Motorway mode function
Motorway mode increases the range and brightness of the cone of light, enabling better visibility.

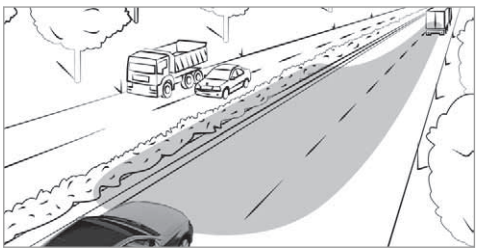

The function is active if a motorway journey is detected by means of:

- the vehicle's speed
- the multifunction camera
- the GPS

The function is not active in the following cases:

- at speeds below 80 km/h.

The city lighting function
City lighting improves the illumination of roadsides in urban areas using a broad distribution of light.

The function is active in the following cases:

- At low speeds
- In illuminated parts of urban areas

Function of the off-road light
The off-road light improves illumination during off-road driving. The low beam is distributed symmetrically and across a wide angle. This makes it easier to find your way when driving off-road and to detect obstacles at an early stage. The active headlamps function is deactivated during this time so that steering movements do not change the illumination.

The function is active when the low beam is switched on if you are not driving at a speed greater than 50 km/h and the (**Offroad**) or

(**Offroad Plus**) drive program has been selected.

Switching the Intelligent Light System on/off
Requirements:

- the ignition is switched on.

Multimedia system:

Home » Settings » Lights » Intelligent Light System

▶ Activate or deactivate the function.

Adaptive Highbeam Assist

Adaptive Highbeam Assist function

⚠ WARNING Risk of accident despite Adaptive Highbeam Assist

Adaptive Highbeam Assist does not react to:

- road users without lights, e.g. pedestrians
- road users with poor lighting, e.g. cyclists
- road users whose lighting is obstructed, e.g. by a barrier

On very rare occasions, Adaptive Highbeam Assist may fail to recognise other road users with their own lighting, or may recognise them too late.

In these, or in similar situations, the automatic high beam will not be deactivated or will be activated despite the presence of other road users.

▶ Always observe the road and traffic conditions carefully and switch off the high beam in good time.

Adaptive Highbeam Assist cannot take into account road, weather or traffic conditions.

Detection may be restricted in the following cases:

- In poor visibility, e.g. fog, heavy rain or snow
- If there is dirt on the sensors or the sensors are obscured

Adaptive Highbeam Assist is only an aid. You are responsible for adjusting the vehicle's lighting to the prevailing light, visibility and traffic conditions.

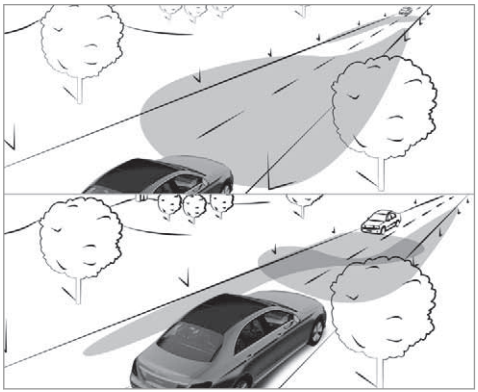

The Adaptive Highbeam Assist automatically switches between the following types of light:

- Low beam
- High beam

At speeds greater than 30 km/h:

- If no other road users are detected, the high beam will be switched on automatically.

The high beam switches off automatically in the following cases:

- At speeds below 25 km/h.
- If other road users are detected.
- If street lighting is sufficient.

At speeds greater than approximately 50 km/h:

- The headlamp range of the low beam is regulated automatically based on the distance to other road users.

The system's optical sensor is located behind the windscreen near the overhead control panel.

Switching Adaptive Highbeam Assist on/off

▶ **To switch on:** turn the light switch to the AUTO position.

▶ Switch on the high beam using the combination switch.
When the high beam is switched on automatically in the dark, the indicator lamp on the multifunction display will light up.

▶ **To switch off:** switch off the high beam using the combination switch.

Adaptive Highbeam Assist Plus

Adaptive Highbeam Assist Plus function

⚠ **WARNING** Risk of accident despite Adaptive Highbeam Assist Plus

Adaptive Highbeam Assist Plus does not react to:

- road users without lights, e.g. pedestrians
- road users with poor lighting, e.g. cyclists
- road users whose lighting is obstructed, e.g. by a barrier

On very rare occasions, Adaptive Highbeam Assist Plus may fail to recognise other road users with their own lighting, or may recognise them too late.

In these, or in similar situations, the automatic high beam will not be deactivated or will be activated despite the presence of other road users.

▶ Always observe the road and traffic conditions carefully and switch off the high beam in good time.

Adaptive Highbeam Assist Plus cannot take into account road, weather or traffic conditions.

Detection may be restricted in the following cases:

- in poor visibility, e.g. fog, heavy rain or snow
- if there is dirt on the sensors or the sensors are obscured

Adaptive Highbeam Assist Plus is only an aid. You are responsible for adjusting the vehicle's lighting to the prevailing light, visibility and traffic conditions.

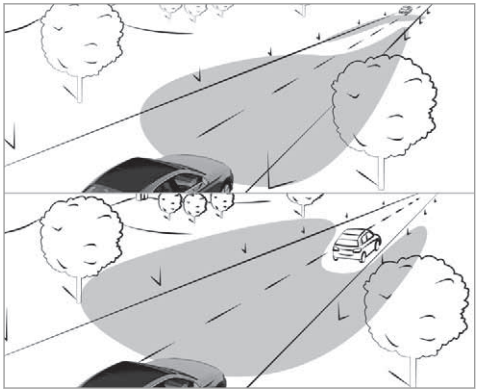

Adaptive Highbeam Assist Plus automatically switches between the following types of light:

- Low beam
- Partial high beam
- High beam

Partial high beam uses the high beam to shine past other road users rather than dazzling them.

The vehicle in front will be illuminated by the low beam.

At speeds greater than 30 km/h:

- If no other road users are detected, the high beam will be switched on automatically.
- If other road users are detected, the partial high beam will be switched on automatically.

At speeds below 25 km/h or when there is sufficient street lighting:

- The high beam will switch off automatically.
- The partial high beam will switch off automatically.

The system's optical sensor is located behind the windscreen near the overhead control panel.

Switching Adaptive Highbeam Assist Plus on/off

▶ **To switch on:** turn the light switch to the AUTO position.

▶ Switch on the high beam using the combination switch.
When the high beam is switched on automatically in the dark, the indicator lamp on the multifunction display will light up.

▶ **To switch off:** switch off the high beam using the combination switch.

Setting the exterior lighting switch-off delay time

Requirements:

- The light switch is in the AUTO position.

Multimedia system:

Settings ▸▸ Lights ▸▸ Ext. light. del. sw. off

▶ Set the switch-off delay time.
When the vehicle engine is switched off, the exterior lighting will be activated for the set time.

Switching the surround lighting on/off

Multimedia system:

→ ⌂ ▸▸ Settings ▸▸ Lights ▸▸ Surround lighting

When Surround lighting is active, the exterior lighting lights up for 40 seconds after the vehicle is unlocked. When you start the vehicle, the surround lighting is deactivated and the automatic driving lights are activated.

▶ Activate or deactivate the function.

Interior lighting

Adjusting the interior lighting

Front overhead control panel

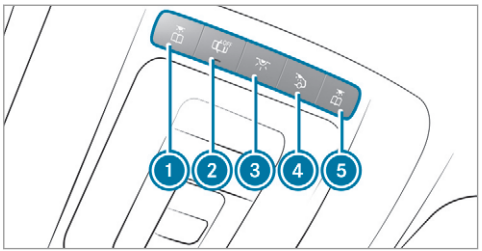

1 Front left reading lamp
2 Automatic interior lighting control
3 Front interior lighting
4 Rear interior lighting
5 Front right reading lamp

▶ **To switch on or off:** press button 1 – 5 accordingly.

Control panel in the grab handle

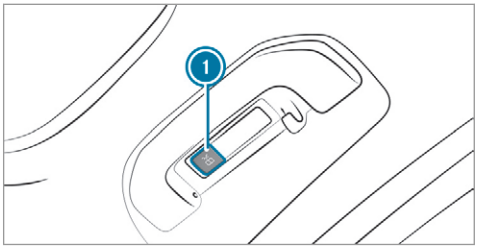

1 Rear reading lamp

▶ **To switch on or off:** press button 1.

Adjusting the ambient lighting

Multimedia system:

→ ⌂ ▸▸ Comfort ▸▸ Ambient lighting

Setting the colour

▶ Select Colour.

▶ Set the desired colour.

Adjusting the brightness

- Select Brightness.
- Adjust the brightness.

Activating the brightness for zones

- Select Brightness.
- Select Brightness zones.
- Activate or deactivate the function.

or

- Set the brightness for the desired zones.

Activating multi-coloured lighting

- Select Colour.
- Select Multi-colour.
- Select a colour combination.

Activating multi-coloured animation

- Select Colour.
- Select Multi-colour animat..
  The chosen colour combination will change at predefined intervals.

Activating welcome lighting

- Select Colour.
- Select Welcome.
  When the vehicle is unlocked, a special ambient lighting sequence will run.

Activating dependency on air conditioning settings

- Select Colour.
- Select Climate.
  If changes are made to the temperature setting in the vehicle, the colour of the ambient lighting will change briefly.

Switching the interior lighting switch-off delay time on/off

Multimedia system:

↳ ⌂ ⏩ Settings ⏩ Lights ⏩ Int. light. del. sw. off

- Switch the switch-off delay time on or off.
  When this function is active, the interior lighting lights up for a short time after the vehicle is locked.

Changing bulbs (only for vehicles with halogen headlamps)

Notes on changing bulbs

⚠ **WARNING** Risk of burns from hot component parts whilst replacing a bulb

Bulbs, lamps and plugs can become very hot during operation.

When replacing a bulb, you could burn yourself on these component parts.

- Allow the component parts to cool down before replacing the bulb.

- Do not use a bulb if it has been dropped or if its glass has been scratched. The bulb may otherwise explode.
- Do not touch the glass bulb with your bare hands.
- Protect bulbs from moisture and do not allow bulbs to come into contact with liquids.

Overview of the bulbs to be changed

Halogen headlamps

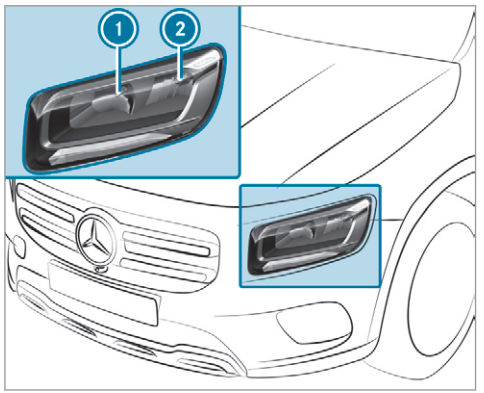

1 High beam: H7 55 W bulb
2 Low beam: H7 55 W bulb

Tail lamps

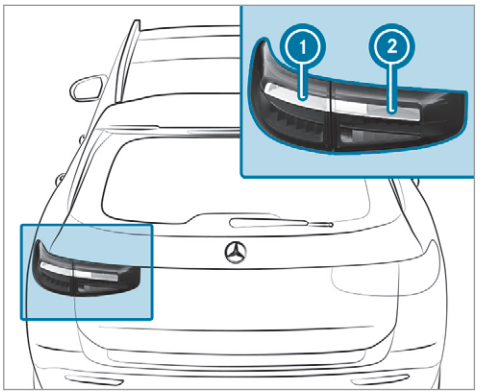

1 Turn signal light: PY 21 W bulb
2 Reversing light: W 16 W bulb

Changing the front bulbs (vehicles with halogen headlamps)

Fitting/removing the cover on the front wheel arch

Requirements:

- The lighting system is switched off.
- The appropriate front wheel is turned inwards.

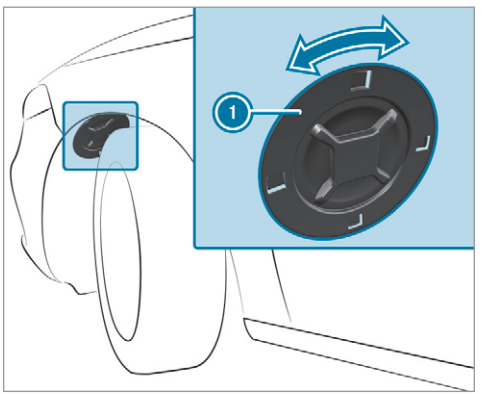

- **To remove:** turn cover (1) to the left and remove it from the wheel arch liner.
- **To install:** insert cover (1) into the wheel arch liner and turn it to the right until it engages.

Replacing light sources in the halogen headlamp
Requirements:

- **Low beam:** an H7 55 W light source is available.
- **High beam:** an H7 55 W light source is available.

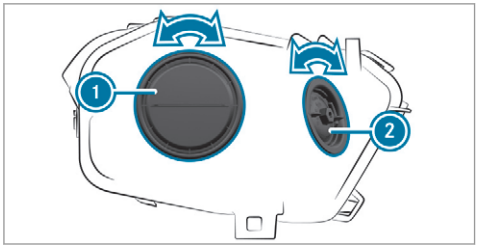

(1) Low beam housing cover
(2) High beam housing cover

(i) When the bonnet is open, you can reach housing cover (2).

- Switch the lighting system off.
- Remove the cover in the front wheel arch (→ page 148).
- Turn the relevant housing cover anti-clockwise and remove it.
- Turn the socket anti-clockwise and remove it.
- Pull the light source out of the socket.
- Insert the new light source into the socket such that the entire base of the light source is resting on the bottom of the socket.
- Insert the socket and turn it clockwise.
- Press on the housing cover and turn it clockwise.
- Replace the cover in the front wheel arch (→ page 148).

Changing the rear bulbs (vehicles with halogen headlamps)

Replacing the tail lamp bulbs

- Due to their locations, have the bulbs for the turn signal light and reversing light changed at a qualified specialist workshop.

Windscreen wipers and windscreen washer system

Switching the windscreen wipers on/off

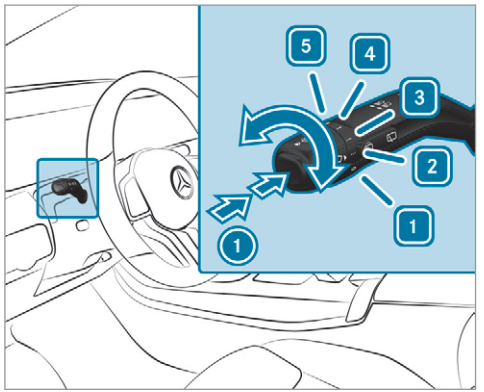

1 0 Windscreen wipers off
2 ••• Automatic wiping, normal
3 •••• Automatic wiping, frequent
4 — Continuous wiping, slow
5 = Continuous wiping, fast

- Turn the combination switch to the correct position 1 - 5.
- **Single wipe/washing:** push the button on the combination switch in the direction of arrow 1.
  - Single wipe
  - Wipes with washer fluid

Switching the rear window wiper on/off

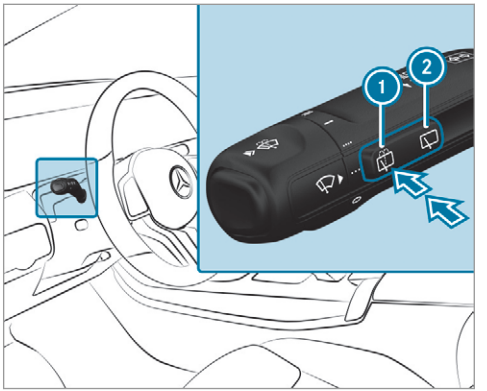

1 Single wipe/washing
2 Intermittent wipe

- **Single wipe:** press button 1 to the point of resistance.
- **Wiping with washer fluid:** press button 1 beyond the point of resistance.

- **Switching intermittent wipe on/off:** press button (2).
  The [⊟] symbol will appear on the instrument cluster when the rear window wiper is switched on.

Replacing the windscreen wiper blades

⚠ WARNING Risk of becoming trapped if the windscreen wipers are switched on while wiper blades are being replaced

If the windscreen wipers begin to move while you are changing the wiper blades, you can be trapped by the wiper arm.

- Always switch off the windscreen wipers and ignition before changing the wiper blades.

Moving the wiper arms into the replacement position

- Switch the ignition on and switch off again immediately.
- Within around 15 seconds, press and hold the [⊟] button on the combination switch for approximately three seconds (→ page 150).
  The wiper arms will move into the replacement position.

Removing the wiper blades

- Fold the wiper arms away from the windscreen.

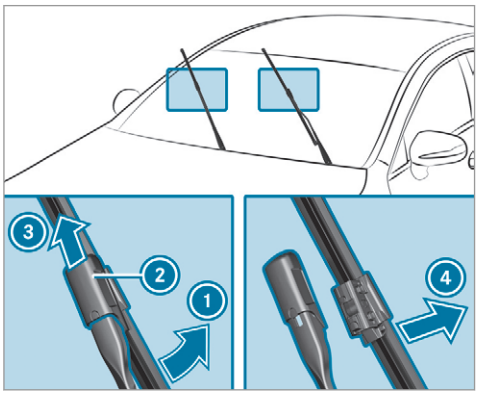

- Hold the wiper arm with one hand. With the other hand, turn the wiper blade in the direction of arrow (1) away from the wiper arm as far as it will go.
- Slide catch (2) in the direction of arrow (3) until it engages in the removal position.
- Remove the wiper blade from the wiper arm in the direction of arrow (4).

Fitting the wiper blades

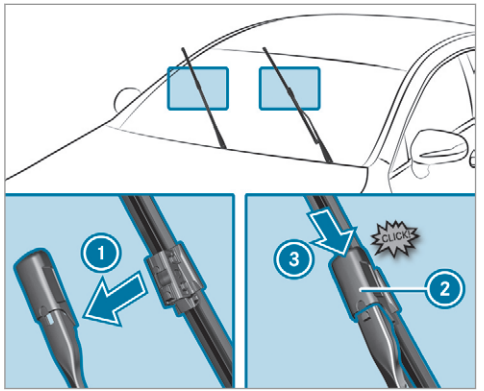

- Insert the new wiper blade into the wiper arm in the direction of arrow (1).
- Slide catch (2) in the direction of arrow (3) until it engages in the locking position.
- Make sure that the wiper blade is seated correctly.
- Fold the wiper arms back onto the windscreen.
- Switch on the ignition.
- Press the button on the combination switch (→ page 150).
  The wiper arms will move into the original position.
- Switch the ignition off.

Maintenance display

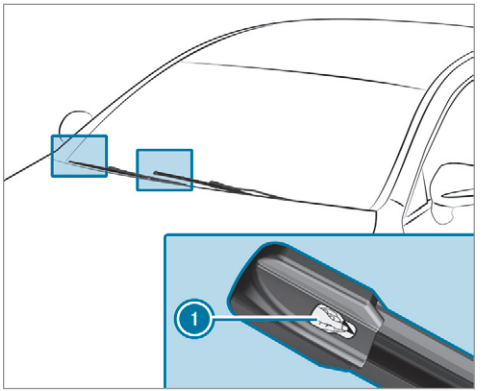

- Remove protective film (1) from the maintenance display on the tip of the newly fitted wiper blades.

When the colour of the maintenance display changes from black to yellow, the wiper blades should be replaced.

ⓘ The duration until the colour changes varies depending on the usage conditions.

Replacing the rear window wiper blade

⚠ **WARNING** Risk of becoming trapped if the windscreen wipers are switched on while wiper blades are being replaced

If the windscreen wipers begin to move while you are changing the wiper blades, you can be trapped by the wiper arm.

- Always switch off the windscreen wipers and ignition before changing the wiper blades.

Removing the wiper blade

- Switch the ignition off.

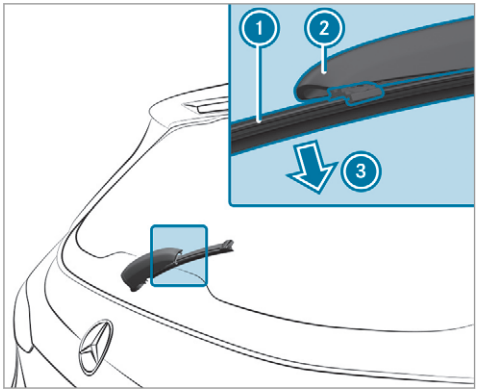

- Fold wiper arm (2) away from the rear window until it engages in the replacement position.
- Unclip wiper blade (1) from wiper arm (2) and remove it in the direction of arrow (3).

Fitting the wiper blade

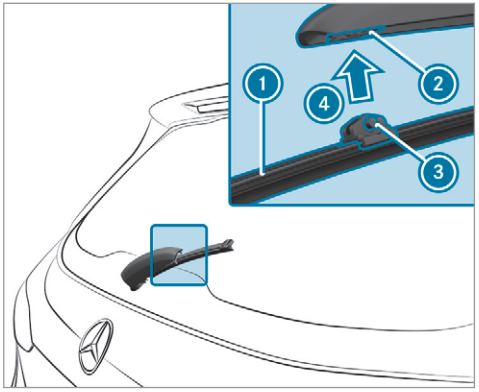

- Position wiper blade (1) with both lugs (3) on holder (2) on the wiper arm.
- Push wiper blade (1) in the direction of arrow (4) until it engages in holder (2).
- Make sure that wiper blade (1) is seated correctly.

▶ Fold the wiper arm from the replacement position back onto the rear window.

Mirrors

Operates the outside mirrors

⚠ WARNING Risk of accident due to adjusting vehicle settings while the vehicle is in motion

You could lose control of the vehicle in the following situations in particular:

- If you adjust the driver's seat, the head restraints, the steering wheel or the mirror while the vehicle is in motion.
- If you fasten your seat belt while the vehicle is in motion.

▶ Before starting the engine: adjust the driver's seat, the head restraints, the steering wheel and the mirror and fasten your seat belt.

⚠ WARNING Risk of accident due to misjudgement of distance when using the outside mirror

The outside mirrors reflect objects on a smaller scale. The objects in view are in fact closer than they appear.

▶ Therefore, always look over your shoulder in order to ensure that you are aware of the actual distance between you and the road users driving behind you.

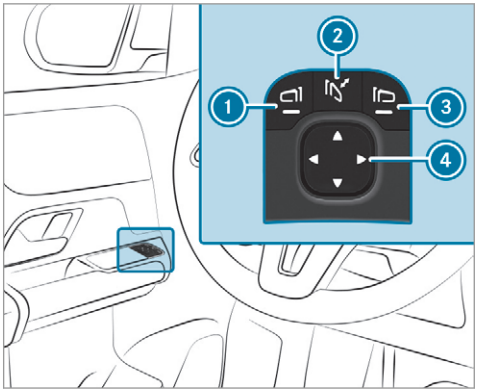

▶ **To fold in or out:** briefly press button 2.

▶ **To set:** press button 1 or 3 to select the outside mirror to be adjusted.

▶ Press button 4 to adjust the position of the mirror glass.

ⓘ If the battery has been disconnected or completely discharged, you will have to reset the outside mirrors. Only then will the automatic mirror folding function work properly.

▶ **To adjust:** briefly press button ②.

An outside mirror that has been pushed out of position can be engaged in position again as follows:

▶ **Vehicles without electrically folding outside mirrors:** manually move the outside mirror into the correct position.

▶ **Vehicles with electrically folding outside mirrors:** press and hold button ②.
You will hear a click and the mirror will audibly click into place. The outside mirror will now be set to the correct position.

Automatic anti-dazzle mirrors function

⚠ **WARNING** Risk of acid burns and poisoning due to the anti-dazzle mirror electrolyte

Electrolyte may escape if the glass in an automatic anti-dazzle mirror breaks.

The electrolyte is hazardous to health and causes irritation. It must not come into contact with your skin, eyes, respiratory organs or clothing or be swallowed.

▶ If you come into contact with electrolyte, observe the following:
- Immediately rinse the electrolyte from your skin with water and seek medical attention.
- If electrolyte comes into contact with your eyes, immediately rinse them thoroughly with clean water and seek medical attention.
- If the electrolyte is swallowed, immediately rinse your mouth out thoroughly. Do not induce vomiting. Seek medical attention immediately.
- Immediately change out of clothing which has been contaminated with electrolyte.
- If an allergic reaction occurs, seek medical attention immediately.

The inside rearview mirror and the outside mirror on the driver's side will automatically go into anti-dazzle mode if light from a headlamp hits the sensor on the inside rearview mirror.

System limits

The system will not go into anti-dazzle mode if:
- the engine is switched off.
- reverse gear is engaged.
- the interior lighting is switched on.

Front-passenger outside mirror parking position function

The parking position makes parking easier.

The front-passenger outside mirror will swivel downwards in the direction of the rear wheel on the front passenger's side when:

- the parking position is stored (→ page 156).
- the front-passenger mirror is selected.
- reverse gear is engaged.

The front-passenger outside mirror will move back to its original position when:

- you shift the transmission to another transmission position.
- you are travelling at a speed greater than 15 km/h.
- you press the button for the outside mirror on the driver's side.

Storing the parking position of the front-passenger outside mirror using reverse gear

Storing

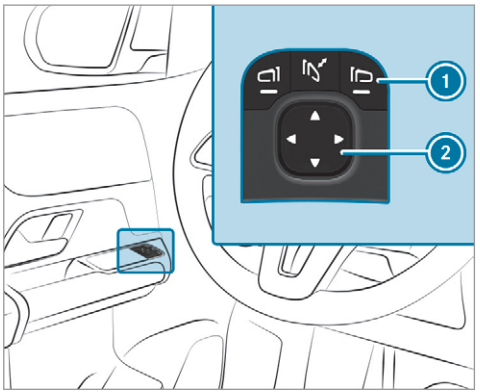

- ▶ Press button 1 to select the front-passenger outside mirror.
- ▶ Engage reverse gear.
- ▶ Move the front-passenger outside mirror into the desired parking position using button 2.

Calling up

- ▶ Press button 1 to select the front-passenger outside mirror.
- ▶ Engage reverse gear.
  The front-passenger outside mirror will move into the stored parking position.

Activating/deactivating the automatic mirror folding function

Multimedia system:

↳ ⌂ ▸▸ Settings ▸▸ Vehicle

- ▶ Switch Automatic fold-in on or off.

Overview of climate control systems

Notes on climate control

An interior air filter in combination with the pre-filter in the engine compartment must always be used so that the air conditioning system, pollution level monitoring and the air filtration work correctly. Make sure that the filter is installed correctly and the filter housing in the engine compartment is closed correctly using the cap and always tightly sealed when in operation. Use filters recommended and approved by Mercedes-Benz. Always have service work carried out at a qualified specialist workshop.

THERMATIC control panel overview

The indicator lamps in the buttons AUTO, MAX, REAR, A/C and ❄ indicate that the corresponding function is activated.

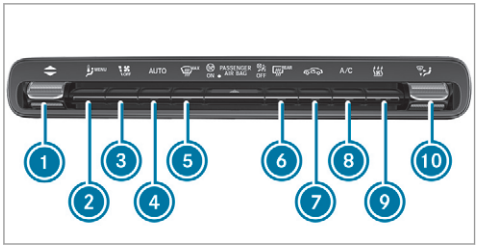

1. ▼▲ Sets the temperature
2. Vehicles with a stationary heater only: MENU calls up the air conditioning menu
3. Sets the airflow or switches off climate control
4. AUTO Sets climate control to automatic (→ page 159)
5. MAX Defrosts the windscreen
6. REAR Switches the rear window heater on/off
7. Switches air-recirculation mode on/off(→ page 160)
8. A/C Switches the A/C function on/off(→ page 158)
9. Vehicles with a stationary heater only: ❄ switches the stationary heater on/off (→ page 160)
10. Sets the air distribution

THERMOTRONIC control panel overview

The indicator lamps in the buttons AUTO, MAX, REAR, A/C REST, SYNC and ❄ indicate that the corresponding function is activated.

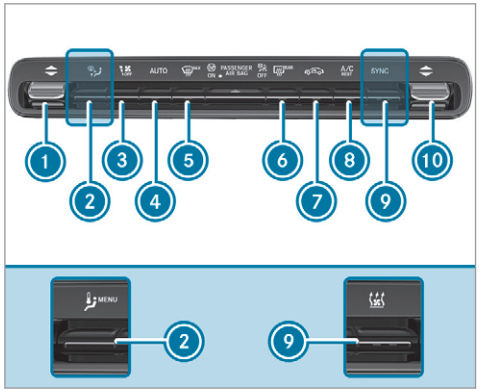

1. ▼▲ Sets the temperature on the driver's side
2. Vehicles without a stationary heater: sets the air distribution
   Vehicles with a stationary heater: MENU calls up the air conditioning menu
3. Sets the airflow or switches off climate control
4. AUTO Sets climate control to automatic (→ page 159)
5. MAX Defrosts the windscreen
6. REAR Switches the rear window heater on/off
7. Switches air-recirculation mode on/off(→ page 160)
8. A/C Switches the A/C function on/off(→ page 158)
   Switches residual heat on/off (→ page 160)
9. Vehicles without a stationary heater: SYNC activates/deactivates synchronisation (→ page 159)
   Vehicles with a stationary heater: switches the stationary heater on/off (→ page 160)
10. ▼▲ Sets the temperature on the front passenger side

Operating the climate control system

Switching climate control on/off

- **To switch on:** set the airflow to level 1 or higher using the button.
- **To switch off:** set the airflow to level 0 using the button.

ⓘ If climate control is switched off, the windows may mist up more quickly. Switch off climate control only briefly.

Switching the A/C function on or off via the control panel

The A/C function heats, cools and dehumidifies the vehicle's interior air.

- Press the A/C / A/C button.

Switch off the A/C function only briefly; otherwise, the windows may mist up more quickly.

Condensation may drip from the underside of the vehicle when cooling mode is active. This is not a sign that there is a fault.

Calling up the air conditioning menu

Calling up the air conditioning menu using the multimedia system

- Select one of the temperature displays at the lower edge of the media display.

Calling up the air conditioning menu using the button on the control panel

- Press the MENU button on the control panel.

Activating/deactivating the A/C function via the multimedia system

The A/C function heats, cools and dehumidifies the vehicle's interior air.

- Call up the air-conditioning menu (→ page 159).
- Select First row of seats.
- Select A/C.

Setting climate control to automatic mode

In automatic mode, the set temperature is controlled and maintained at a constant level by the air supply.

- Press the AUTO button.
- **To switch to manual mode:** press the or AUTO button.

In automatic mode, you can choose between five different air quantities using the button. Automatic mode is retained.

Setting the air distribution

- Call up the air conditioning menu (→ page 159).
- Select a row of seats.
- **To set the air distribution:** select , or .
- Set the airflow.

ⓘ Several air distribution options can be selected at the same time, for example to set the climate control for the windscreen and the footwells simultaneously.

The climate control for the windscreen can only be selected for the first seat row.

Activating/deactivating the climate control synchronisation function via the control panel

Climate control can be set centrally using the synchronisation function. The temperature and air distribution settings for the driver's side will be adopted automatically for the front passenger side.

- Press the SYNC button.

The synchronisation function will be deactivated if the settings for one of the other climate zones are changed.

Activating/deactivating the climate control synchronisation function via the multimedia system

Climate control can be set centrally using the synchronisation function. The driver's settings for temperature, air quantity and air distribution are adopted automatically for all climate zones.

- Call up the air conditioning menu (→ page 159).
- Select First row of seats.
- Select SYNC.

Demisting the windows

Windows misted up on the inside

- Press the AUTO button.
- If the windows continue to mist up: press the MAX button.

Windows misted up on the outside

- Switch on the windscreen wipers.
- Press the AUTO button.

Switching air-recirculation mode on/off

- Press the button.
  The interior air will be recirculated.

Air-recirculation mode automatically switches to fresh air mode after some time.

ⓘ If air-recirculation mode is switched on, the windows may mist up more quickly. Switch on air-recirculation mode only briefly.

Switching residual heat on/off

Requirements:

- the vehicle is parked.

ⓘ Only vehicles with a diesel engine can use residual heat.

It is possible to make use of the residual heat from the engine to continue heating or ventilating the front compartment of the vehicle for approximately 30 minutes, depending on the temperature set.

- **To activate:** press the A/C REST button.

Residual heat will be switched off automatically.

Stationary heater/ventilation

Stationary heater/stationary ventilation function

- The air inside the vehicle is heated or ventilated to the set temperature.
- The air inside the vehicle cannot be cooled down to temperatures below the outside temperature.
- If the outside temperature changes, ventilation mode automatically switches to heating mode or heating mode automatically switches to ventilation mode.

The stationary heater and the exhaust gas outlet are situated in front of the right-hand front wheel.

Switching the stationary heater/ventilation on/off via the control panel

⚠ **DANGER** Risk of fatal injury due to poisonous exhaust gases

If the tailpipe is blocked or sufficient ventilation is not possible, poisonous exhaust gases

such as carbon monoxide may enter the vehicle. This is the case in enclosed spaces or if the vehicle gets stuck in snow, for example.

- ▶ Always switch the stationary heater off in enclosed spaces without an air extraction systems, e.g. in garages.
- ▶ Keep the tailpipe and the area around the vehicle free from snow when the engine or the stationary heater are running.
- ▶ Open a window on the windward side of the vehicle to ensure an adequate supply of fresh air.

⚠ **WARNING** Risk of fire due to hot stationary heater components and exhaust gases

Flammable materials such as leaves, grass or twigs may ignite.

- ▶ When the stationary heater is switched on, make sure that:
  - hot vehicle parts do not come into contact with flammable materials.
  - the exhaust gas can flow out of the stationary heater exhaust pipe unhindered.
  - the exhaust gas does not come into contact with flammable materials.

! **NOTE** Battery discharge caused by stationary heater or stationary ventilation operation

Operating the stationary heater or stationary ventilation drains the battery.

- ▶ After heating or ventilating the vehicle twice, drive for a longer period of time.

Requirements:

- The fuel tank has been filled to at least ¼.

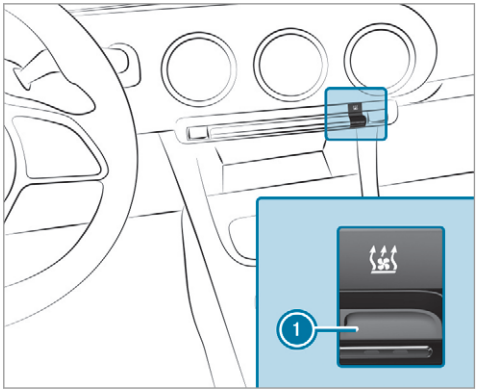

- ▶ Set the desired temperature using the ▼▲ button.
- ▶ Press button 1. The red or blue indicator lamp on button 1 will light up or go out.

The colours of the indicator lamp have the following meanings:

- **Blue:** stationary ventilation is switched on.

- **Red:** the stationary heater is switched on.
- **Yellow:** the departure time is preselected.

The stationary heater/ventilation will switch off automatically after 50 minutes.

Operation using the app: the stationary heater/ventilation can also be operated via the Mercedes me connect app. You can find further information in the separate Owner's Manual at https://moba.i.daimler.com/markets/ece-row/baix/cars/connectme/en_GB/#emotions/Startseite.html.

Setting the stationary heater/stationary ventilation via the multimedia system

▶ Call up the air conditioning menu (→ page 159).

▶ Select Auxiliary heating.

Selecting the departure time

▶ Select the time TIME A: XX, TIME B: XX or TIME C: XX.

Setting the departure time

▶ Select the time TIME A: XX, TIME B: XX or TIME C: XX.

▶ Select the pen beside the time.

▶ Set a time.

Setting the stationary heater/ventilation via remote control

Requirements:

- The fuel tank has been filled to at least ¼.

Switching on immediately



▶ Press and hold the ON button.

Setting the departure time

▶ Briefly press button ON .

▶ Press the ◁ or ▷ button repeatedly until the time to be changed appears on the display.

- Press the ON and OFF buttons simultaneously.
  The symbol on the remote control display will flash.
- Press the ◁ and ▷ buttons to set the desired departure time.
- Press the ON and OFF buttons simultaneously.
  The new departure time will be stored.

Up to three departure times can be stored.

- **To activate the departure time:** select the desired departure time and press and hold the ON button.
  The symbol, the departure time and, depending on the selected departure time, the letter **A, B** or **C** will appear on the display.
- **To deactivate the departure time:** select the desired departure time and press and hold the OFF button.
  OFF will appear on the display.
- **To check the status of the active stationary heater:** briefly press the ON button.

Switching off immediately

- Press and hold the OFF button.

Overview of the remote control displays (stationary heater/stationary ventilation)

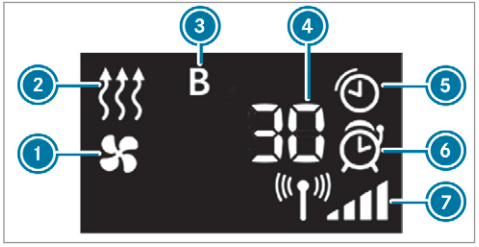

1. Stationary ventilation switched on
2. Stationary heater switched on
3. Selected departure time
4. Remaining time for the stationary heater/stationary ventilation (in minutes)
5. Stationary heater/stationary ventilation active
6. Departure time activated
7. Signal strength

Further possible displays:

- **Time:** activated departure time.
- **Zero minutes:** the running time for the stationary heater is increased, as the engine has not yet reached operating temperature when it is started.
- **OFF:** the stationary heater/stationary ventilation is switched off.

Replacing the remote control battery (stationary heater)

⚠ **DANGER** Serious damage to health caused by swallowing batteries

Batteries contain toxic and corrosive substances. Swallowing batteries may cause serious damage to health.

There is a risk of fatal injury.

- Keep batteries out of the reach of children.
- If batteries are swallowed, seek medical attention immediately.

ENVIRONMENTAL NOTE Environmental damage due to improper disposal of batteries

Batteries contain toxic and corrosive substances.

- Take discharged batteries to a qualified specialist workshop or to a collection point for used batteries.

Requirements:

- a CR2450 lithium battery

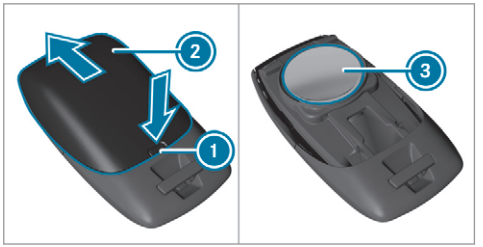

- Push a pointed object into recess (1).
- Slide battery cover (2) backwards in the direction of the arrow.
- Insert new battery (3) with the lettering facing upwards.
- Slide battery cover (2) in the opposite direction to the arrow onto the remote control until the battery cover engages.

Problems with the remote control for the stationary heater/stationary ventilation

Problem	Possible causes/consequences and ▶ Solutions
FAIL	The signal transmission between the transmitter and the vehicle is faulty.

Problem	Possible causes/consequences and ▶ Solutions
	▶ Change your position in relation to the vehicle, moving closer if necessary.
FAIL	The starter battery is not sufficiently charged. ▶ Charge the starter battery.
	The fuel tank content is below the reserve fuel level. ▶ Refuel at the nearest filling station.
FAIL	The stationary heater is malfunctioning. ▶ Have the stationary heater checked at a qualified specialist workshop.

Air vents

Adjusting the front air vents

WARNING Risk of burns and frostbite due to being too close to the air vents

Very hot or very cold air can flow from the air vents.

▶ Make sure that all vehicle occupants always maintain a sufficient distance from the air vents.

▶ If necessary, direct the airflow to another area of the vehicle interior.

To guarantee the flow of fresh air through the air vents into the vehicle interior, comply with the following:

- Always keep the vents and the vent grille in the vehicle interior free.
- Keep the air inlet free of deposits (→ page 321).

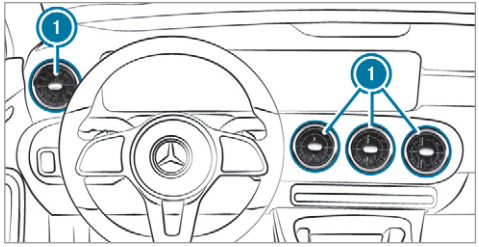

- **To open or close:** hold air vent (1) in the centre and turn it to the left (open) or right (closed) as far as it will go.
- **To set the airflow direction:** hold air vent (1) in the centre and move it up or down or to the left or right.

Adjusting the rear air vents

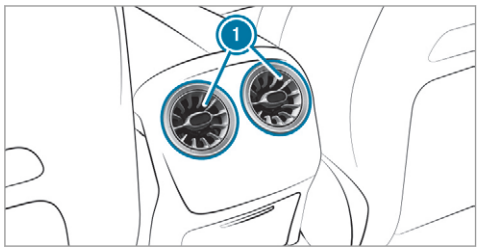

- **To open or close:** hold air vent (1) in the centre and turn it to the left (open) or right (closed) as far as it will go.
- **To set the airflow direction:** hold air vent (1) in the centre and move it up or down or to the left or right.

Driving

Notes on Mercedes-AMG vehicles

Observe the notes on the following additional topics in the Supplement, as you may otherwise fail to recognise dangers:

- Emotion Start
- RACE START
- DRIFT MODE

Switching on the power supply or the ignition (without engine start)

⚠ **WARNING** Risk of accident and injury due to children left unattended in the vehicle

If children are left unsupervised in the vehicle, they could, in particular:

- open doors, thereby endangering other persons or road users.
- get out and be struck by oncoming traffic.
- operate vehicle equipment and become trapped, for example.

In addition, the children could also set the vehicle in motion, for example by:

- releasing the parking brake.
- change the transmission position.
- start the vehicle.

▶ Never leave children unattended in the vehicle.

▶ When leaving the vehicle, always take the key with you and lock the vehicle.

▶ Keep the key out of reach of children.

Also observe the "Notes on pets in the vehicle".

This also applies to the Digital Vehicle Key if the "Digital Vehicle Key" function is activated via Mercedes me connect.

Requirements:

- the key is in the vehicle and has been recognised.
- or: a Digital Vehicle Key is located in the marked space (→ page 169).
- **Vehicles with automatic transmission:** the brake pedal is not depressed.
- **Vehicles with manual transmission:** the clutch pedal is not depressed.

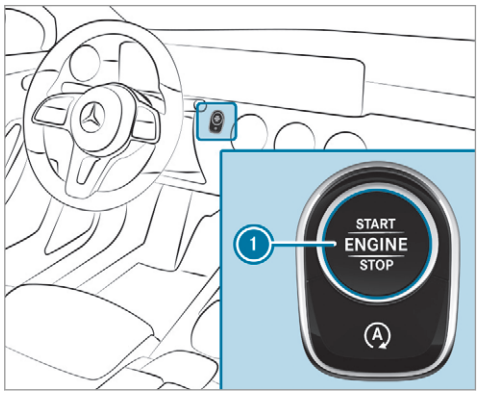

▶ **To switch on the power supply:** press button 1 once.
You can activate the windscreen wiper, for example.

The power supply is switched off again if the following conditions are met:

- you open the driver's door.
- you press button (1) twice more.

▶ **To switch on the ignition:** press button (1) twice.
The indicator lamps in the instrument cluster light up.

The ignition is switched off again if one of the following conditions is met:

- **vehicles with automatic transmission:** you do not start the vehicle within 15 minutes and the transmission is in position P or the electric parking brake is applied.
- **Vehicles with manual transmission:** you do not start the vehicle within 15 minutes and the electric parking brake is applied.
- you press button (1) once.

Starting the vehicle

Starting the vehicle with the start/stop button

⚠ **DANGER** Risk of death caused by exhaust gases

Combustion engines emit poisonous exhaust gases such as carbon monoxide. Inhaling these exhaust gases is hazardous to health and leads to poisoning.

▶ Never leave the engine or, if present, the auxiliary heating running in an enclosed space without sufficient ventilation.

⚠ **WARNING** Risk of fire due to flammable material in the engine compartment or the exhaust system

Flammable materials may ignite.

▶ Therefore, check regularly that there are no flammable materials in the engine compartment or on the exhaust system.

Requirements:

- the key is in the vehicle and is recognised.
- or: a Digital Vehicle Key is located in the marked space and is recognised (→ page 169).

▶ **Vehicles with manual transmission:** depress the clutch pedal.

▶ **Vehicles with automatic transmission:** shift the transmission to position P or N.

▶ Depress the brake pedal and press button (1) once.

▶ If the vehicle does not start: switch off non-essential consumers and press button (1) once.

If the vehicle still does not start, one of the following display messages appears in the multifunction display:

▶ Place the key in the marked space See Owner's Manual: Starting the vehicle with the key in the marked space (emergency operation mode) (→ page 169).

or

▶ Key not detected Place smartphone in charging bracket: place the mobile phone in the marked space (⟶ page 135).

ⓘ You can switch off the engine while driving by pressing button ① for about three seconds or by pressing button ① three times within three seconds. Be sure to observe the safety notes under "Driving tips" (⟶ page 172).

Starting the vehicle with a Digital Vehicle Key

Requirements:

- one of the following versions of the Digital Vehicle Key is available:
  - suitable mobile phone
  - Digital Vehicle Key sticker
- the vehicle is equipped with the "Digital Vehicle Key" function.
- the "Digital Vehicle Key" function is activated via Mercedes me connect: https://www.mercedes.me.
- the mobile phone is sufficiently charged.

ⓘ Mercedes-Benz recommends that you carry the emergency key in case of function restrictions.

ⓘ If the mobile phone is in a protective case, this can impair the functionality.

Using the Digital Vehicle Key for the first time

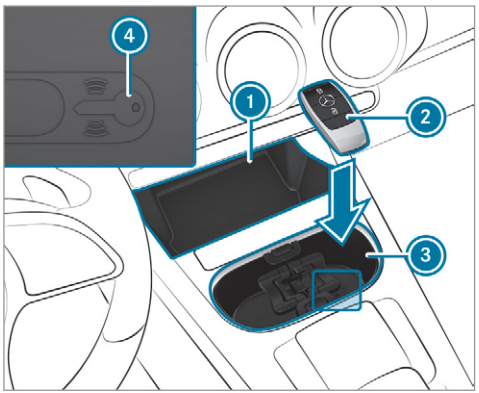

▶ Deactivate the key ② (⟶ page 75).

▶ Place the key ② in the marked space ③ on the symbol ④.

▶ Place the mobile phone or the Digital Vehicle Key sticker in the marked space ①.

▶ Start the vehicle using the start/stop button.

Any further starts with the Digital Vehicle Key

The key is not needed for any further starts.

▶ Place the mobile phone or the Digital Vehicle Key sticker in the marked space ①.

▶ Start the vehicle using the start/stop button.

The "Digital Vehicle Key" service can be deactivated at https://www.mercedes.me. The function is then deactivated in the mobile phone via an online connection. If connection to the Internet is not possible, e.g. after the mobile phone or the Digital Vehicle Key sticker has been stolen, the key function can be deactivated at a Mercedes-Benz service centre.

Starting the vehicle with the key in the marked space (emergency operation mode)

If the vehicle does not start and the Place the key in the marked space See Owner's Manual

message appears in the multifunction display, you can start the vehicle in emergency operation mode.

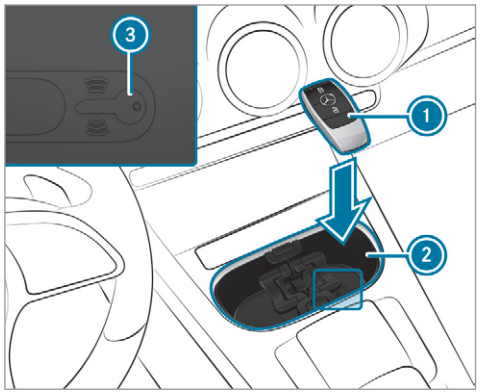

Marked space (example with cup holder without cover)

- Open the cover of the marked space (2) if necessary.
- Make sure that the marked space (2) is empty.
- Remove the key (1) from the key ring.
- Place the key (1) in the marked space (2) on the symbol (3).
  The vehicle will start after a short time.
  If you remove the key (1) from the marked space (2) the engine continues running. For further engine starts however, the key (1) must be located in the marked space (2) on the symbol (3) during the entire journey.
- Have the key (1) checked at a qualified specialist workshop.

If the vehicle does not start:

- place the key (1) in the marked space (2) and leave it there.
- **Vehicles with manual transmission:** depress the clutch pedal.
- Depress the brake pedal and start the vehicle using the start/stop button.

ⓘ You can also switch on the power supply or the ignition with the start/stop button.

Starting the vehicle via Remote Online services

Cooling or heating the vehicle interior before commencing your journey

Ensure the following before starting the engine:

- the legal stipulations in the area where your vehicle is parked allow engine starting via smartphone.
- it is safe to start and run the engine where your vehicle is parked.
- the fuel tank is sufficiently full.
- The starter battery is sufficiently charged.

Charging the starter battery before starting the journey

If the vehicle battery is discharged, you receive a message on your smartphone. You can then start the vehicle with the smartphone to charge the battery. The vehicle is automatically switched off after ten minutes.

Ensure the following before starting the engine:

- the legal stipulations in the area where your vehicle is parked allow engine starting via smartphone.
- it is safe to start and run the engine where your vehicle is parked.
- the fuel tank is sufficiently full.

Starting the vehicle (Remote Online)

⚠ **WARNING** Risk of crushing or entrapment due to unintentional starting of the engine

Limbs could be crushed or trapped if the engine is started unintentionally during service or maintenance work.

▶ Always secure the engine against unintentional starting before carrying out maintenance or repair work.

Requirements:

- park position P is selected.
- the anti-theft alarm system is not activated.
- the panic alarm is not activated.
- the hazard warning light system is switched off.
- The bonnet is closed.
- the doors are closed and locked.
- the windows and sliding sunroof are closed.

▶ Start the vehicle using the smartphone. After every engine start, the engine runs for ten minutes.

You can carry out a maximum of two consecutive starting attempts. The vehicle must be started once with the key before trying to start the engine again with the smartphone. you can stop the vehicle again at any time.

ⓘ Further information can be found in the smartphone app.

Securing the engine against starting before carrying out maintenance or repair work:

▶ switch on the hazard warning light system.

or

▶ unlock the doors.

or

▶ open a side window or the sliding sunroof.

Running-in notes

Mercedes-AMG vehicles: observe the notes in the Supplement. You could otherwise fail to recognise dangers.

To preserve the engine during the first 1,500 km:

- drive at varying road speeds and engine speeds.
- drive the vehicle in drive program C or E.
- shift to the next highest gear at the very latest when the needle reaches the last third before the red area in the rev counter.
- do not shift down a gear manually in order to brake.
- avoid overstraining the vehicle, e.g. driving at full throttle.
- **vehicles with automatic transmission:** do not depress the accelerator pedal beyond the pressure point (kickdown).

- only increase the engine speed gradually and accelerate the vehicle to full speed after 1,500 km.

This also applies when the engine or parts of the drivetrain have been replaced.

Please also observe the following running-in notes:

- in certain driving and driving safety systems, the sensors adjust automatically while a certain distance is being driven after the vehicle has been delivered or after repairs. Full system effectiveness is not reached until the end of this teach-in process.
- brakepads, brake discs and tyres that are either new or have been replaced only achieve optimum braking effect and grip after several hundred kilometres of driving. Compensate for the reduced braking effect by applying greater force to the brake pedal.

Notes on driving

⚠ WARNING Risk of accident due to objects in the driver's footwell

Objects in the driver's footwell may impede pedal travel or block a depressed pedal.

This jeopardises the operating and road safety of the vehicle.

▶ Stow all objects in the vehicle securely so that they cannot get into the driver's footwell.

▶ Always fit the floor mats securely and as prescribed in order to ensure that there is always sufficient room for the pedals.

▶ Do not use loose floor mats and do not place floor mats on top of one another.

⚠ WARNING Risk of accident due to incorrect footwear

Incorrect footwear includes, for example:

- shoes with platform soles
- shoes with high heels
- slippers

▶ Always wear suitable footwear so that you can operate the pedals safely.

⚠ WARNING Risk of accident when switching off the ignition when driving

If you switch off the ignition while driving, safety functions are restricted or no longer available.

You will then need, for example, to use considerably more force to steer and brake.

▶ Do not switch off the ignition while driving.

DANGER Risk of death caused by exhaust gases

Combustion engines emit poisonous exhaust gases such as carbon monoxide. Inhaling these exhaust gases is hazardous to health and leads to poisoning.

- Never leave the engine or, if present, the auxiliary heating running in an enclosed space without sufficient ventilation.

WARNING Risk of skidding and of an accident due to shifting down on slippery road surfaces

If you shift down on slippery road surfaces to increase the engine braking effect, the drive wheels may lose traction.

- Do not shift down on slippery road surfaces to increase the engine braking effect.

DANGER Risk of fatal injury due to poisonous exhaust gases

If the tailpipe is blocked or sufficient ventilation is not possible, poisonous exhaust gases such as carbon monoxide may enter the vehicle. This is the case when the vehicle becomes stuck in snow, for example.

- Keep the tailpipe and the area around the vehicle free from snow when the engine or the stationary heater are running.
- Open a window on the side of the vehicle facing away from the wind to ensure an adequate supply of fresh air.

WARNING Risk of accident due to the brake system overheating

If you leave your foot on the brake pedal when driving, the brake system may overheat.

This increases the braking distance and the brake system may even fail.

- Never use the brake pedal as a footrest.
- Do not depress the brake pedal and the accelerator pedal at the same time while driving.

NOTE Engine damage due to excessively high engine speeds

The engine will be damaged if you drive with the engine in the overrevving range.

- Do not drive with the engine in the overrevving range.

NOTE Causing wear to the brake linings by permanently depressing the brake pedal

- Do not permanently depress the brake pedal while driving.
- To use braking effect of the engine, shift to a lower gear in good time.

! NOTE Damage to the drivetrain and engine when pulling away

- ▶ Do not warm up the engine while the vehicle is stationary. Pull away immediately.
- ▶ Avoid high engine speeds and driving at full throttle until the engine has reached its operating temperature.

! NOTE Damage to the catalytic converter due to non-combusted fuel

The engine is not running smoothly and is misfiring.

Non-combusted fuel may get into the catalytic converter.

- ▶ Only depress the accelerator pedal slightly.
- ▶ Have the cause rectified immediately at a qualified specialist workshop.

Notes on driving on salt-treated roads

The braking effect is limited on salt-treated roads.

Therefore, observe the following notes:

- due to salt build-up on the brake disks and brakepads, the braking distance can increase considerably or result in braking only on one side
- maintain a much greater safe distance to the vehicle in front

To remove salt build-up:

- brake occasionally while paying attention to the traffic conditions
- carefully depress the brake pedal at the end of the journey and when starting the next journey

Notes on aquaplaning

Aquaplaning can take place once a certain amount of water has accumulated on the road surface.

Observe the following notes during heavy precipitation or in conditions in which aquaplaning may occur:

- reduce speed
- avoid tyre ruts
- avoid sudden steering movements
- brake carefully

ⓘ Also observe the notes on regularly checking wheels and tyres (→ page 350).

Notes on driving through water on the road surface

Water which has entered into the vehicle can damage the engine, electrics and transmission.

Water can also enter the air intake of the engine and cause engine damage.

Observe the following if you must drive through water:

- The water, when calm, may only reach the lower edge of the vehicle body.
- Drive at walking pace at most, otherwise water can enter the vehicle interior or engine compartment.
- Vehicles travelling in front, or oncoming vehicles, can create waves which may exceed the maximum permissible depth of the water.

The braking effect of the brakes is reduced after fording. Brake carefully while paying attention to

the traffic conditions until braking power has been fully restored.

Notes on off-road driving

WARNING Risk of accident if you do not keep to line of fall on inclines

If you drive at an angle or turn on an incline, the vehicle could slip sideways, tip and roll-over.

- Always drive on inclines in the line of fall (straight up or down) and do not turn.

WARNING Risk of fire due to flammable materials on hot parts of the exhaust system

Flammable material such as leaves, grass or twigs may ignite if they come into contact with hot parts of the exhaust system.

- When driving on unpaved roads or off-road, regularly check the vehicle underside.
- Remove trapped plants or other flammable material, in particular.
- If there is damage, consult a qualified specialist workshop immediately.

When driving off-road, sand, mud and water or water mixed with oil may get into the brakes. This may lead to a reduction in braking effect or total brake failure as a result of increased wear. The braking characteristics will vary depending on the material that has entered the system. Clean the brakes after driving off-road. If you then notice reduced braking effect or hear scraping noises, have the brake system checked at a qualified specialist workshop. Adapt your driving style to the changed braking characteristics.

NOTE Damage caused by driving over obstacles

The vehicle can be damaged by:

- driving up onto high kerbs or unpaved roads.
- quickly driving over obstacles such as kerbs, speed bumps or potholes.
- heavy objects hitting the underbody or chassis components.

- Do not drive over obstacles that could damage the vehicle.
- Check the vehicle regularly for damage during off-road driving.
- Adjust the vehicle speed to suit the road surface conditions.
- If there is damage, consult a qualified specialist workshop immediately.

ENVIRONMENTAL NOTE Environmental damage due to non-observance of prohibition signs

Environmental protection has priority. Treat nature with respect.

▶ Be sure to observe prohibition signs.

ⓘ The vehicle is designed for easily negotiable and moderate off-road terrain. When driving off-road, make sure there is sufficient ground clearance.

Checklist before driving off-road

Check the following points before driving off-road:

- Fuel level
- **Vehicles with a diesel engine:** AdBlue® level
- Engine oil level: fill engine oil to the maximum level to ensure full gradeability (→ page 318).
- Tyre-change tool kit and spare wheel
- Tyres and wheels

Off-road driving

Read this section before driving your vehicle off-road. Practise by driving over more gentle off-road terrain first.

- Observe the notes on the cross-country ABS (→ page 204).
- If necessary, select the  (→ page 180) drive program before driving off-road.
- Always keep the engine running and in gear when driving on downhill gradients and slopes. Observe the notes on driving in mountainous terrain.
- Do not drive on unknown terrain that is not easily visible and stay on marked routes.
- Always keep the doors and windows closed while the vehicle is in motion.
- Deactivate Active Distance Assist DISTRONIC, cruise control and the variable limiter.
- Adapt your driving style to the terrain.
- Do not use the HOLD function on steep downhill or uphill gradients with slippery or loose surfaces.

Driving on sand

When driving on sand, also observe the following instructions:

- Select the  drive program.
- Shift to a lower gear.
- Drive quickly to overcome the rolling resistance, otherwise the vehicle may dig itself in.
- Drive in the tracks of other vehicles if possible. Make sure that the following prerequisites are met:
  - the tyre ruts are not too deep
  - the sand is firm enough
  - the ground clearance is sufficient

Mercedes-AMG vehicles: observe the notes in the Supplement. You could otherwise fail to recognise dangers.

Fording

Also observe the following information when fording:

- Drive no faster than 10 km/h.

- The water, when calm, may only reach the lower edge of the vehicle body.
- Switch off automatic climate control (→ page 159).
- **Vehicles with stationary heater/ventilation:** switch the stationary heater/ventilation off (→ page 160).
- Ensure that a bow wave does not form as you drive.
- Do not stop in the water and do not switch off the engine. Ensure the ECO start/stop function is switched off (→ page 178).

Driving in mountainous terrain

Also observe the following information when driving in mountainous terrain:

- Observe the values of the approach/departure angle and of the maximum gradient (→ page 381).
- Avoid high engine speeds.
- Use the braking power of the engine when driving downhill.
- Shift to a lower gear on uphill gradients and on long, steep downhill gradients.
- Activate DSR before driving downhill, if necessary (→ page 216).

Checklist after driving off-road

Driving off-road places greater demands on your vehicle than driving on normal roads. Check the entire vehicle for damage and foreign bodies every time after driving off-road. Foreign bodies in the wheels or drivetrain can lead to imbalances and therefore vibrations.

- If the drive program is selected: select another drive program.
- Deactivate DSR.
- Apply the brakes to dry them after fording.
- Check that the service brake is working normally after a long downhill stretch.
- Clean the following components every time after driving off-road:
  - licence plate number
  - headlamps and tail lamps
  - tyres, wheels and wheel arches
  - underbody
- After driving through sand, mud, water or gravel, have the following components checked and cleaned:
  - brake disks and brakepads
  - tyres and wheels
  - axle joints

ECO start/stop function

Operation of the ECO start/stop function

Mercedes-AMG vehicles: observe the notes in the Supplement. You could otherwise fail to recognise dangers.

ⓘ The ECO start/stop function is available only in the S, C, E and I* drive programs (depending on the setting).

If all vehicle-related conditions for an automatic engine stop are met, the engine is switched off automatically:

- **vehicles with manual transmission:** you brake the vehicle, shift into neutral N when

travelling at a low speed and then release the clutch pedal.

- **vehicles with automatic transmission:** you brake the vehicle to a standstill in transmission position D or N.
- you activate the HOLD function or engage transmission position P.

ⓘ If the system detects an intelligent stop inhibitor, e.g. a a stop sign, the engine will not stop. When the HOLD function is active and in transmission position P, the engine can stop in spite of an intelligent stop inhibitor.

The engine is restarted automatically if:

- **vehicles with manual transmission:** you depress the clutch pedal.
- **vehicles with automatic transmission:** you shift into transmission position D or R.
- you depress the accelerator pedal.
- an automatic engine start is required by the vehicle.

ECO start/stop function symbols in the multifunction display:

- the symbol Ⓐ (green) appears when the vehicle is at a standstill: the engine was switched off by the ECO start/stop function.
- the symbol Ⓐ (yellow) appears when the vehicle is at a standstill: not all vehicle conditions for an engine stop have been met.
- neither the symbol Ⓐ nor Ⓐ appears when the vehicle is at a standstill: an intelligent stop inhibitor was detected, e.g. a stop sign.
- the symbol Ⓐ^{OFF} appears: the ECO start/stop function is deactivated or there is a malfunction.

If the engine was switched off by the ECO start/stop function and you leave the vehicle, a warning tone sounds and the engine is not restarted. In addition, the display message Vehicle is operational Switch off ignition before exitingappears in the multifunction display. If you do not switch off the ignition, the ignition is automatically switched off after three minutes.

Deactivating or activating the ECO start/stop function

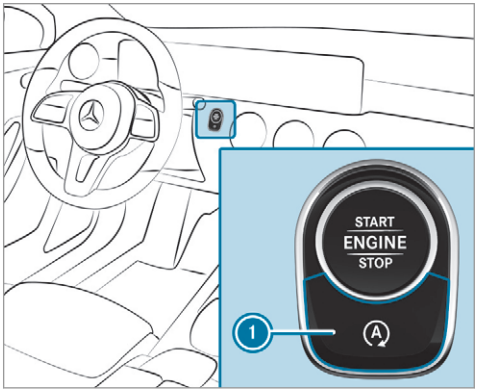

▶ Press button 1.
A display appears in the instrument cluster when switching the ECO start/stop function off/on.

ⓘ A continuous Ⓐ^{OFF} display appears in the instrument cluster while the ECO start/stop function is deactivated.

ECO display function

The ECO display summarises your driving characteristics from the start of the journey to its completion and assists you in achieving the most economical driving style.

You can influence consumption by doing the following:

- drive with particular care
- **Vehicles with automatic transmission:** drive in drive program E.
- **Vehicles with manual transmission:** drive in drive program C.
- follow the gearshift recommendations

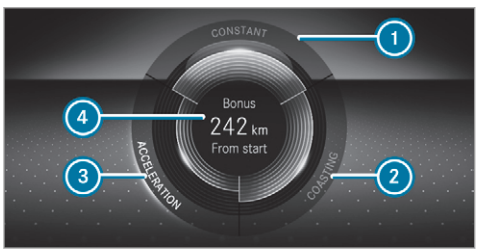

The lettering in the segment will light up brightly, the outer edge will light up and the segment will fill up when the following driving style is adopted:

- 1 Steady speed
- 2 Gentle deceleration and rolling
- 3 Moderate acceleration

The lettering in the segment will be grey, the outer edge will be dark and the segment will empty when the following driving style is adopted:

- 1 Fluctuations in speed
- 2 Heavy braking
- 3 Sporty acceleration

The ECO display will show you when you have driven economically:

- The three segments will fill up completely at the same time
- The edges around all three segments will light up

The additional range achieved as a result of your driving style in comparison with a driver with a very sporty driving style will be shown in the centre of the display 4. The range displayed does not indicate a fixed reduction in consumption.

DYNAMIC SELECT switch

Function of the DYNAMIC SELECT switch

Mercedes-AMG vehicles: observe the notes in the Supplement. You could otherwise fail to recognise dangers.

ⓘ Depending on the engine and equipment, the vehicle has different drive programs.

Use the DYNAMIC SELECT switch to change between the following drive programs:

- I* **(Individual):** individual settings
- S **(Sport):** sporty driving style
- C **(Comfort):** comfortable and economical driving style

E **(Eco):** particularly economical driving style (vehicles with automatic transmission)

Offroad: driving on less demanding off-road terrain

ⓘ The drive program selected appears in the multifunction display of the on-board computer.

ⓘ Depending on the situation, the cylinder can be briefly switched on in the drive programs E and C, depending on the engine.

Depending on the drive program, the following systems change their characteristics:

- drive
  - engine and transmission management
  - Active Distance Assist DISTRONIC
- ESP®
- **vehicles with adaptive damping adjustment:** suspension
- electric power steering

Notes on the roof load display

Certain drive programs and ESP® settings are unsuitable for transporting a roof load.

If one of these drive programs is set or selected, the  symbol is shown as a warning. When this symbol is shown, the selected drive program is not suitable for transporting a load on the roof.

The following drive programs are affected:

- **Sport** drive program
- **Individual** drive program with the Sport ESP® setting

ⓘ The symbol is also shown in the following situations:

- Within the themes if a corresponding drive program is saved

  For more information on themes see .
- Within the reset display if the previously active drive program is unsuitable for the transport of a roof load

  For further information on the reset display, see (→ page 181).

Selecting the drive program

ⓘ Depending on the equipment, the vehicle is fitted with either a switch or a button.

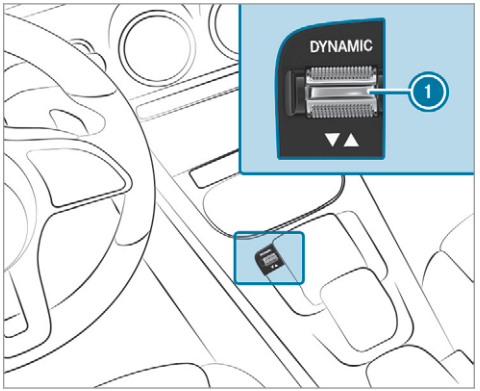

▶ Press DYNAMIC SELECT switch ① forwards or backwards.
The drive program selected appears in the multifunction display.

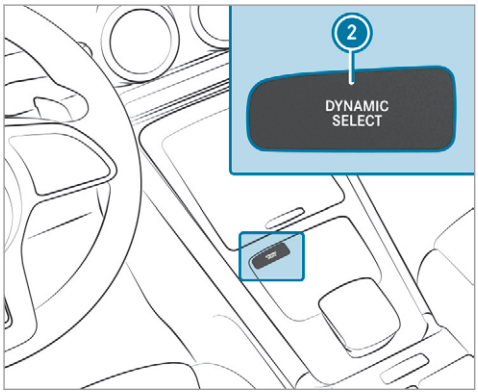

▶ Press DYNAMIC SELECT button ②.
The DYNAMIC SELECT menu appears in the multifunction display.

▶ Press DYNAMIC SELECT button ② again.
The chosen drive program appears.

Configuring DYNAMIC SELECT (multimedia system)

Multimedia system:
→ ⌂ ▸▸ Settings ▸▸ Vehicle ▸▸ DYNAMIC SELECT

Setting drive program I

▶ Select Individual configuration.
▶ Select and set a category.

Switching the restoration display on or off

▶ Switch Ask when starting on or off.

Function on: the next time the vehicle is started a prompt appears asking whether the last active drive program should be restored. If the ECO start/stop function was deactivated, an additional prompt appears asking if the function should remain deactivated.

ⓘ The prompt appears only if the previously active settings deviate from the standard settings.

Function off: the next time the vehicle is started the C drive program is set automatically. The ECO start/stop function is activated automatically.

ⓘ This function must be activated for each user profile separately. Only when this function is activated will the drive program and Eco start/stop setting for the previous journey be saved for the respective user profile.

Displaying vehicle data

Multimedia system:
→ ⌂ ▸▸ Info

▶ Select Vehicle.
The vehicle data is displayed.

Displaying engine data

Multimedia system:

→ ⌂ ⏩ Info

▶ Select Engine.
The engine data is displayed.

ⓘ The actual (maximum) values that can be achieved for engine output and engine torque may deviate from the certified values within the country-specific guidelines for permissible tolerances (basis: UN-ECE No. 85 or country-specific guidelines).

Factors that can influence this are, for example:

- Sea level
- Fuel grade
- Outside temperature
- Operating temperature of the engine

ⓘ The values displayed serve only as orientation. The values for engine output and engine torque shown in the media display may deviate from the actual values.

Calling up the consumption indicator

Multimedia system:

→ ⌂ ⏩ Info

▶ Select Consumption.
The current and average consumption is displayed.

Manual transmission

Operating the gearshift lever

⚠ **WARNING** Risk of accident and injury due to children left unattended in the vehicle

If children are left unsupervised in the vehicle, they could, in particular:

- open doors, thereby endangering other persons or road users.
- get out and be struck by oncoming traffic.
- operate vehicle equipment and become trapped, for example.

In addition, the children could also set the vehicle in motion, for example by:

- releasing the parking brake.
- change the transmission position.
- start the vehicle.

▶ Never leave children unattended in the vehicle.

▶ When leaving the vehicle, always take the key with you and lock the vehicle.

▶ Keep the key out of reach of children.

This also applies to the Digital Vehicle Key if the "Digital Vehicle Key" function is activated via Mercedes me connect.

! **NOTE** Damage to the engine and transmission by shifting to a gear that is too low

▶ When changing between gears 5 and 6 push the gearshift lever to the right.

▶ Do not shift down at high speeds.

! **NOTE** Damage to the coupling due to improper use

Holding the vehicle on inclines with a slipping coupling can damage it.

▶ Do not allow the coupling to slip in order to hold the vehicle on inclines.

! **NOTE** Damage to the transmission by shifting to reverse gear R while the vehicle is in motion

▶ Only shift into reverse gear R when the vehicle is stationary.

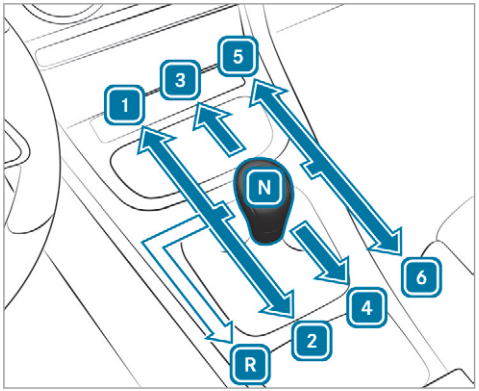

R Reverse gear
1 - 6 Forward gears
N Neutral

▶ **Engaging forward gears 1 - 6 or neutral N :**
- depress the clutch pedal completely.
- turn the gearshift lever to the desired position.

▶ **Engaging reverse gear R :**
- depress the clutch pedal completely.
- pull the gearshift lever up, push it to the left and then pull it back.

Gearshift recommendation

The gearshift recommendation assists you in adopting an economical driving style.

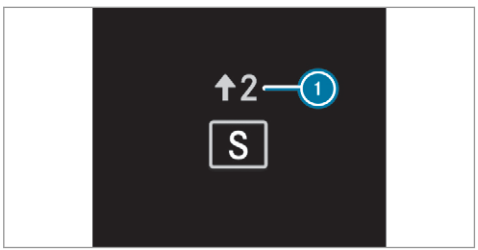

▶ If gearshift recommendation message (1) appears on the multifunction display, shift to the recommended gear.

Automatic transmission

DIRECT SELECT lever

Function of the DIRECT SELECT lever

WARNING Risk of accident due to incorrect gearshifting

If the engine speed is higher than the idle speed and you engage the transmission position D or R, the vehicle may accelerate sharply.

- If you engage the transmission position D or R when the vehicle is at a standstill, always depress the brake pedal firmly and do not accelerate at the same time.

WARNING Risk of accident and injury due to children left unattended in the vehicle

If children are left unsupervised in the vehicle, they could, in particular:

- open doors, thereby endangering other persons or road users.
- get out and be struck by oncoming traffic.
- operate vehicle equipment and become trapped, for example.

In addition, the children could also set the vehicle in motion, for example by:

- releasing the parking brake.
- change the transmission position.
- start the vehicle.

- Never leave children unattended in the vehicle.
- When leaving the vehicle, always take the key with you and lock the vehicle.
- Keep the key out of reach of children.

This also applies to the Digital Vehicle Key if the "Digital Vehicle Key" function is activated via Mercedes me connect.

Use the DIRECT SELECT lever to switch the transmission position. The current transmission position is displayed in the multifunction display.

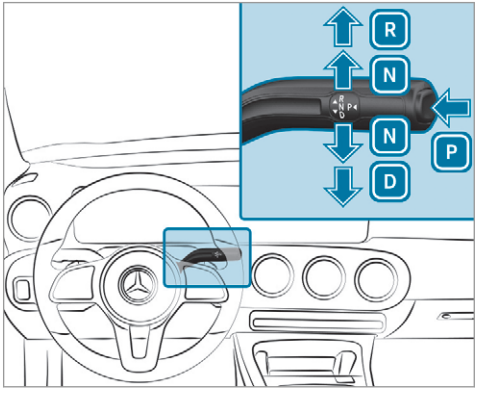

P Park position
R Reverse gear

N Neutral
D Drive position

Engaging reverse gear R

- Depress the brake pedal and push the DIRECT SELECT lever upwards past the first point of resistance.

Engaging neutral N

- Depress the brake pedal and push the DIRECT SELECT lever up or down to the first point of resistance.

Subsequently releasing the brake pedal will allow you to move the vehicle freely, e.g. to push it or tow it away.

Proceed as follows if you want the automatic transmission to remain in neutral N even if the ignition is switched off or the driver's door is opened:

- Start the vehicle.
- Depress the brake pedal and engage neutral N when the car is stationary.
- Release the brake pedal.
- Switch the ignition off.

ⓘ If you then exit the vehicle leaving the key in the vehicle, the automatic transmission remains in neutral N.

Engaging park position P

- Observe the notes on parking the vehicle (→ page 195).
- Depress the brake pedal until the vehicle is stationary.
- When the vehicle is stationary, press button P.
  When the transmission position display shows P, the park position is engaged. If no transmission position display P appears, secure the vehicle to prevent it from rolling away.

ⓘ Depending on the situation, it may take a short time until P is engaged. Therefore, always pay attention to the transmission position display.

Park position P is engaged automatically if one of the following conditions is met:

- you switch off the ignition when the vehicle is stationary and the transmission is in position D or R.
- you open the driver's door when the vehicle is stationary or when driving at a very low speed and the transmission is in position D or R.

ⓘ To manoeuvre with an open driver's door, open the driver's door while stationary and engage transmission position D or R again.

ⓘ At very low outside temperatures below approx. -20 °C, you may not be able to shift the transmission from P to another transmission position when the engine is switched off. If this is the case, only change the transmission position while the engine is running.

Engaging drive position D

▶ Depress the brake pedal and push the DIRECT SELECT lever down past the first point of resistance.

When the automatic transmission is in transmission position D, it shifts the gears automatically. This depends, among other things, on the following factors:

- the selected drive program
- the position of the accelerator pedal
- the driving speed

Problems with the transmission

The transmission has a faulty gear shift

Possible cause:

- the transmission is losing oil.

▶ Have the transmission checked at a qualified specialist workshop immediately.

The acceleration characteristics get worse, and the transmission no longer shifts.

Possible cause:

- the transmission is in emergency operation mode.

▶ Stop the vehicle in accordance with the traffic conditions.
▶ Shift the transmission to position P.
▶ Switch off the engine.
▶ Wait at least ten seconds.
▶ Start the engine again.
▶ Shift the transmission to position D.
▶ Have the transmission checked at a qualified specialist workshop immediately.

Manual gearshifting

Mercedes-AMG vehicles: observe the notes in the Supplement. You could otherwise fail to recognise dangers.

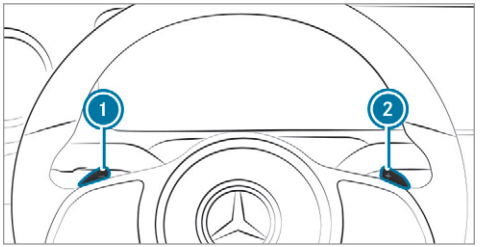

When the automatic transmission is shifted to position D, you can manually shift it with the steering wheel gearshift paddle. If permitted, the automatic transmission shifts to a higher or lower gear depending on the steering wheel gearshift paddle being pulled.

You have two options to manually shift the automatic transmission:

- temporary setting
- permanent setting

The gears shift automatically when manual gearshifting is deactivated.

Temporary setting:

- **to activate:** pull steering wheel gearshift paddle 1 or 2.
  Manual gearshifting is activated for a short time. The transmission position display shows M and the current gear.

ⓘ How long the manual gearshifting stays activated is dependant on various factors.

Manual gearshifting can be automatically deactivated in the following cases:

- changing the drive program
- restarting the vehicle
- when the transmission position D is engaged again
- driving style

- **To shift up:** pull steering wheel gearshift paddle 2.
- **To shift down:** pull steering wheel gearshift paddle 1.
  If you pull and hold the steering wheel gearshift paddle 1, the transmission shifts to the lowest possible gear.
- **To deactivate:** pull steering wheel gearshift paddle 2 and hold it in place.
  The transmission position display shows D.

Permanent setting:

- change to drive program I* (→ page 180).
- select drive setting M (→ page 181).

Gearshift recommendation

Mercedes-AMG vehicles: observe the notes in the Supplement. You could otherwise fail to recognise dangers.

The gearshift recommendation assists you in adopting an economical driving style.

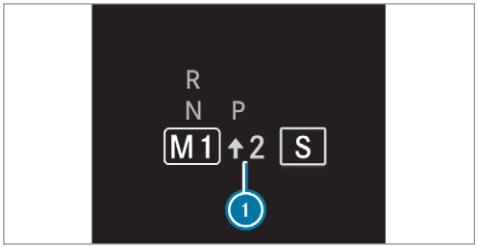

- If the gearshift recommendation 1 appears next to the transmission position display, shift to the recommended gear.

Using kickdown

Mercedes-AMG vehicles: observe the notes in the Supplement. You could otherwise fail to recognise dangers.

- **Maximum acceleration:** depress the accelerator pedal beyond the pressure point.

The automatic transmission shifts up to the next gear when the maximum engine speed is reached to protect the engine from overrevving.

Glide mode function

Mercedes-AMG vehicles: observe the notes in the Supplement. You could otherwise fail to recognise dangers.

With an anticipatory driving style, Glide mode helps you to reduce fuel consumption.

Glide mode is characterised by the following:

- the combustion engine is disconnected from the drivetrain and continues to run in neutral.
- the transmission position display D is shown in green.

Glide mode is activated if the following conditions are met:

- drive program E is selected.
- the speed is within a suitable range.
- the road's course is suitable, e.g. no steep uphill or downhill inclines or tight bends.
- There is no trailer coupled to the trailer hitch, and no bicycle rack fitted.
- you do not depress the accelerator or brake pedal (except for light brake applications).

ⓘ Glide mode can also be activated if you have selected the "Eco" setting for the drive in the drive program .

Glide mode is deactivated again if one of the conditions is no longer met.

Vehicles with Active Distance Assist DISTRONIC: when Active Distance Assist DISTRONIC is active, the glide mode function is not available.

Glide mode can also be prevented by the following parameters:

- incline
- downhill gradient
- temperature
- height
- speed
- operating status of the engine
- traffic situation

ⓘ Glide mode can be ended by pressing a steering wheel gearshift paddle (→ page 186).

Function of the 4MATIC

4MATIC ensures that all four wheels are driven. Together with ESP® and 4ETS, 4MATIC improves the traction of your vehicle whenever a driven wheel spins due to insufficient traction.

If you fail to adapt your driving style, 4MATIC can neither reduce the risk of an accident nor override the laws of physics. 4MATIC cannot take account of road, weather and traffic conditions. 4MATIC is only an aid. You are responsible especially for maintaining a safe distance from the vehicle in front, for vehicle speed, for braking in good time and for staying in lane.

ⓘ In wintry road conditions, the maximum effect of 4MATIC can be achieved only if you use winter tyres (M+S tyres), with snow chains if necessary.

Refuelling

Refuelling the vehicle

WARNING Risk of fire or explosion from fuel

Fuels are highly flammable.

- Fire, naked flames, smoking and creation of sparks must be avoided.
- Switch off the ignition and, if available, the stationary heater, before and while refuelling the vehicle.

WARNING Risk of injury from fuels

Fuels are poisonous and hazardous to your health.

- Do not swallow fuel or let it come into contact with skin, eyes or clothing.
- Do not inhale fuel vapour.
- Keep children away from fuel.
- Keep doors and windows closed during the refuelling process.

If you or other people come into contact with fuel, observe the following:

- Immediately rinse fuel off your skin with soap and water.
- If fuel comes into contact with your eyes, immediately rinse them thoroughly with clean water. Seek medical attention immediately.
- If you swallow fuel, seek medical attention immediately. Do not induce vomiting.
- Change immediately out of clothing that has come into contact with fuel.

WARNING Risk of fire and explosion due to electrostatic charge

Electrostatic charge can ignite fuel vapour.

- Before you open the fuel filler cap or take hold of the pump nozzle, touch the metallic vehicle body.
- To avoid creating another electrostatic charge, do not get into the vehicle again during the refuelling process.

WARNING Risk of fire from fuel mixture

Vehicles with a diesel engine:

While the engine is running, component parts in the exhaust system may overheat without warning.

- Never refuel using petrol.
- Never mix petrol with diesel fuel.

NOTE Damage caused by the wrong fuel

Vehicles with a petrol engine:

Even small amounts of the wrong fuel could result in damage to the fuel system, the engine and the emission control system.

- Only refuel using unleaded, sulphur-free fuel that conforms to European EN 228, or an equivalent specification.

Fuel of this specification may contain up to 10% ethanol. Your vehicle is suitable for use with E10 fuel.

Never refuel with one of the following fuels:

- diesel
- regular petrol with an octane number lower than 91 RON
- petrol with more than 10% ethanol by volume, e.g. E15, E20, E85, E100
- petrol with more than 3% methanol by volume, e.g. M15, M30
- petrol with additives containing metal

If you have accidentally refuelled with the wrong fuel:

▶ do not switch the ignition on.
▶ Consult a qualified specialist workshop.

! NOTE Damage caused by the wrong fuel

Vehicles with a diesel engine:

Even small amounts of the wrong fuel could result in damage to the fuel system, the engine and the emission control system.

▶ Only refuel using sulphur-free diesel fuel that conforms to European standard EN 590, or an equivalent specification.
In countries without sulphur-free diesel fuel, refuel using only low-sulphur diesel fuel with a sulphur content less than 50 ppm.

Never refuel using any of the following fuels:

- petrol
- marine diesel
- heating oil
- pure bio-diesel fuel or vegetable oil
- paraffin or kerosene

If you accidentally refuel with the wrong fuel:

▶ Do not switch the ignition on.
▶ Consult a qualified specialist workshop.

! NOTE Do not use diesel to refuel vehicles with a petrol engine

If you have accidentally refuelled with the wrong fuel:

- do not switch the ignition on. Otherwise fuel can enter the engine.
  Even small amounts of the wrong fuel could result in damage to the fuel system and the engine. The repair costs are high.

▶ Consult a qualified specialist workshop.
▶ Have the fuel tank and fuel lines drained completely.

! NOTE Do not use petrol to refuel vehicles with a diesel engine

If you have accidentally refuelled with the wrong fuel:

- do not switch the ignition on. Otherwise, fuel can enter the fuel system.

Even small amounts of the wrong fuel could result in damage to the fuel system and the engine. The repair costs are high.

- ▶ Consult a qualified specialist workshop.
- ▶ Have the fuel tank and fuel lines drained completely.

! **NOTE** Damage to the fuel system caused by overfilled fuel tanks

- ▶ Only fill the fuel tank until the pump nozzle switches off.

If you have added too much fuel because of a defective filling pump, for instance:

- ▶ Do not switch the ignition on.
- ▶ Consult a qualified specialist workshop.

! **NOTE** Fuel may spray out when you remove the fuel pump nozzle

- ▶ Only fill the fuel tank until the pump nozzle switches off.

Requirements:

- The vehicle is unlocked.

ⓘ Do not get into the vehicle again during the refuelling process. Otherwise, electrostatic charge could build up again.

Observe the notes on operating fluids and fuel.

The recommended octane number for your vehicle can be found on the information label in the fuel filler flap.

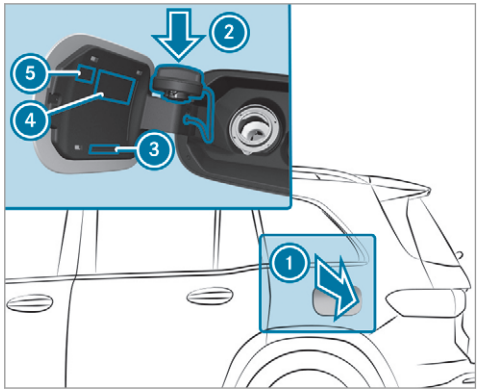

1. Fuel filler flap
2. Bracket for fuel filler cap
3. Fuel type
4. Tyre pressure table
5. QR code for rescue card

- ▶ Press on the back area of fuel filler flap 1.
- ▶ Turn the fuel filler cap anti-clockwise and remove it.

- ▶ Insert the fuel filler cap from above into bracket (2).
- ▶ Completely insert the pump nozzle into the tank filler neck, hook in place and refuel.
- ▶ Only fill the fuel tank until the pump nozzle switches off.

ⓘ **Vehicles with a diesel engine:** the tank filler neck is designed for refuelling at diesel filling pumps.

ⓘ **Vehicles with a diesel engine:** when the fuel tank is completely empty, top up with at least 5 litres of diesel.

ⓘ **Vehicles with a diesel engine:** use a filler neck with a large diameter for vehicles with a diesel engine when topping up fuel from a fuel can. Otherwise, the filler neck cannot slide into the tank.

- ▶ Replace the cap on the filler neck and turn clockwise until it engages audibly.
- ▶ Close fuel filler flap (1).

ⓘ Close the fuel filler flap before locking the vehicle.

AdBlue® (vehicles with a diesel engine only)

Notes on refilling AdBlue®

AdBlue® is a water-soluble fluid for the NOx exhaust gas aftertreatment of diesel engines. In order for the exhaust gas aftertreatment to function properly, only use AdBlue® in accordance with ISO 22241.

AdBlue® is characterised by the following:

- non-toxic
- colourless and odourless
- non-flammable

If you open the AdBlue® tank, small amounts of ammonia vapour may be released. Only fill the AdBlue® tank in well-ventilated areas.

Do not let AdBlue® come into contact with skin, eyes or clothes. Keep AdBlue® away from children.

Do not ingest AdBlue®. If AdBlue® is swallowed, immediately rinse your mouth out thoroughly. Drink plenty of water. Seek medical attention at once.

Observe the notes on operating fluids (→ page 372).

AdBlue® is available here:

- AdBlue® can be topped up by fast service at a qualified specialist workshop, e.g. a Mercedes-Benz Service Centre.
- AdBlue® is available at many filling stations from AdBlue® filling pumps.
- Alternatively, AdBlue® is available at qualified specialist workshops, e.g. Mercedes-Benz Service Centres, and at many filling stations in AdBlue® refill canisters or AdBlue® refill bottles.

ⓘ Ensure the connection between the refill container and vehicle filler neck does not drip.

Topping up AdBlue®

NOTE Engine damage due to AdBlue® being in the fuel

- AdBlue® must not be used to fill the fuel tank.
- Only use AdBlue® to fill the AdBlue® tank.
- Do not overfill the AdBlue® tank.

NOTE Contamination of the vehicle interior due to AdBlue® leakage

- After topping up, carefully close the AdBlue® refill container.
- Avoid carrying AdBlue® refill containers permanently in the vehicle.

Requirements:

- The vehicle is unlocked.

The following messages appear in order in the multifunction display when the AdBlue® tank requires topping up:

- Refill AdBlue See Owner's ManualThe AdBlue® level has fallen below the reserve range. Top up with at least 5 l of AdBlue®.
- Top up AdBlue Emergency op. in XXX miles See Owner's ManualThe low AdBlue® level will lead to limited performance after the remaining distance displayed has been driven. Top up with at least 5 l of AdBlue®.
- XX,X l Top up AdBlue Emer. op.: max. XXX km/h Start not poss. in XXX kmThe low AdBlue® level will lead to limited performance from the speed displayed. After the remaining distance displayed has been covered, it will no longer be possible to start the engine. Top up with at least the amount of AdBlue® displayed.
- XX,X l Top up AdBlue Switch on ignition, wait 60 sec. or eng. start not poss.. The AdBlue® tank is empty. You can no longer start the engine. Top up with at least the amount of AdBlue® displayed. Switch on the ignition and wait for approximately 60 seconds. Start the engine.

You can see the AdBlue® range and level in the multifunction display.

ⓘ The AdBlue® range shown depends strongly on the driving style and operating conditions. The actual range can therefore deviate from the calculated range.

Opening the AdBlue® filler cap

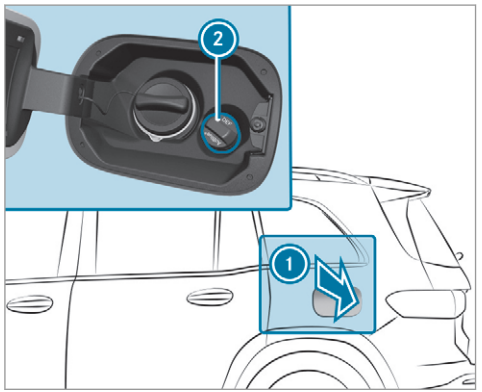

- ▶ Press on the back area of fuel filler flap (1).
- ▶ Turn AdBlue® filler cap (2) anti-clockwise and remove it.

ⓘ You can also store the AdBlue® filler cap in the fuel filler cap holder in the fuel filler flap hinge arm.

Topping up AdBlue®

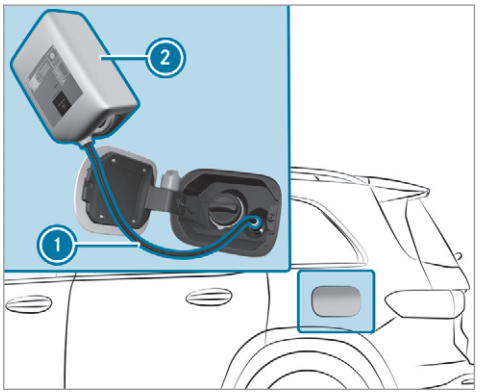

- ▶ Screw on the fastener of AdBlue® refill canister (2).
- ▶ Screw disposable hose (1) onto the opening of AdBlue® refill canister (2) until hand-tight.
- ▶ Screw disposable hose (1) onto the filler neck of the vehicle until hand-tight.
- ▶ Lift up and tip AdBlue® refill canister (2). The filling process stops when the AdBlue® tank is completely full.

  AdBlue® refill canister (2) can be removed when it has been only partially emptied.
- ▶ Unscrew and close disposable hose (1) and AdBlue® refill canister (2) in reverse order.
- ▶ Replace the AdBlue® filler cap and turn it clockwise.
- ▶ Close the fuel filler flap.
- ▶ Switch on the ignition for at least 60 seconds.

ⓘ If the vehicle could not be started as the AdBlue® tank was empty, it can take up to 60 seconds for the refill to be detected.

- ▶ Start the vehicle.

ⓘ Avoid storing AdBlue® refill containers permanently in the vehicle.

Parking

Parking the vehicle

WARNING Risk of accident and injury caused by an insufficiently secured vehicle rolling away

If the vehicle is not securely parked sufficiently, it can roll away in an uncontrolled way even at a slight downhill gradient.

- On uphill or downhill gradients, turn the front wheels so that the vehicle rolls towards the kerb if it starts moving.
- apply the parking brake.
- Vehicles with automatic transmission: shift the transmission to position P.
- Vehicles with manual transmission: engage first 1 or reverse gear R.

WARNING Risk of fire caused by hot exhaust system parts

Flammable materials such as leaves, grass or twigs may ignite.

- Park the vehicle so that no flammable material can come into contact with hot vehicle components.
- In particular, do not park on dry grassland or harvested grain fields.

WARNING Risk of accident and injury due to children left unattended in the vehicle

If children are left unsupervised in the vehicle, they could, in particular:

- open doors, thereby endangering other persons or road users.
- get out and be struck by oncoming traffic.
- operate vehicle equipment and become trapped, for example.

In addition, the children could also set the vehicle in motion, for example by:

- releasing the parking brake.
- change the transmission position.
- start the vehicle.

- Never leave children unattended in the vehicle.
- When leaving the vehicle, always take the key with you and lock the vehicle.
- Keep the key out of reach of children.

This also applies to the Digital Vehicle Key if the "Digital Vehicle Key" function is activated via Mercedes me connect.

NOTE Damage to the vehicle due to it rolling away

- Always secure the vehicle against rolling away.

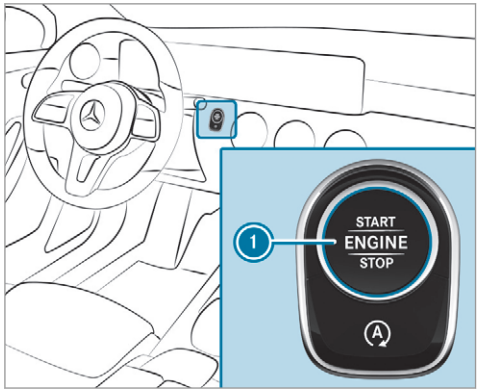

- Bring the vehicle to a standstill by applying the brake pedal.
- On gradients, turn the front wheels so that the vehicle will roll towards the kerb if it starts moving.
- Apply the electric parking brake.
- **Vehicles with manual transmission:** engage first 1 or reverse gear R.
- **Vehicles with automatic transmission:** engage transmission position P in a stationary vehicle with the brake pedal applied (→ page 185).
- Switch off the engine and the ignition by pressing the ① button.
- Release the service brake slowly.
- Get out of the vehicle and lock it.

ⓘ When you park the vehicle, you can still operate the side windows and the panorama sliding sunroof for approximately five minutes if the driver's door is closed.

Garage door opener

Programming buttons for the garage door opener

DANGER Risk of death caused by exhaust gases

Combustion engines emit poisonous exhaust gases such as carbon monoxide. Inhaling these exhaust gases is hazardous to health and leads to poisoning.

- Never leave the engine or, if present, the auxiliary heating running in an enclosed space without sufficient ventilation.

WARNING Risk of injury when opening or closing a door with the garage door opener

When you operate or program the door with the integrated garage door opener, persons in the range of movement of the door may become trapped or be struck by the door.

- Always make sure that nobody is within the range of movement of the door.

Requirements:

- The vehicle has been parked outside the garage or outside the range of movement of the door.
- The engine is switched off.
- The ignition is switched on.

ⓘ The garage door opener function is always available when the ignition is switched on.

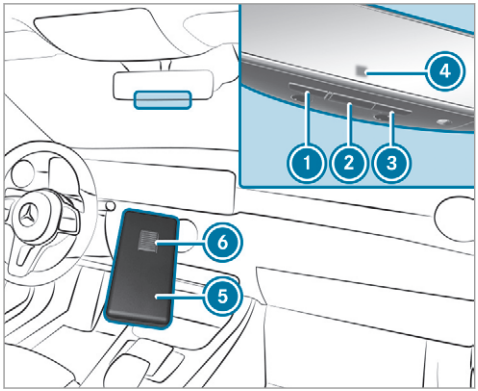

- Press and hold button 1, 2 or 3 that you wish to program.
  Indicator lamp 4 flashes yellow.

ⓘ It can take up to 20 seconds before the indicator lamp flashes yellow.

- Release the previously pressed button.
  Indicator lamp 4 continues to flash yellow.
- Point remote control 5 from a distance of 1 cm to 8 cm towards button 1, 2 or 3.
- Press and hold button 6 of remote control 5 until one of the following signals appears:
  - Indicator lamp 4 lights up green continuously. Programming is complete.
  - Indicator lamp 4 flashes green. Programming was successful. Additionally, synchronisation of the rolling code with the door system must also be carried out.
- If indicator lamp 4 does not light up or flash green: repeat the procedure.
- Release all of the buttons.

ⓘ The remote control for the door drive is not included in the scope of delivery of the garage door opener.

Synchronising the rolling code
Requirements:

- The door system uses a rolling code.
- The vehicle must be within range of the garage door or door drive.
- The vehicle as well as persons and objects are located outside the range of movement of the door.

- Press the programming button on the door drive unit.
  Initiate the next step within approximately 30 seconds.
- Press previously programmed button 1, 2 or 3 repeatedly until the door closes.
  When the door closes, programming is completed.

ⓘ Please also read the operating instructions for the door drive.

Troubleshooting when programming the remote control

- Check if the transmitter frequency of remote control 5 is supported.
- Replace the batteries in remote control 5.
- Hold remote control 5 at various angles from a distance of 1 cm to 8 cm front of the inside rearview mirror. You should test every position for at least 25 seconds before trying another position.

- ▶ Hold remote control (5) at the same angles at various distances in front of the inside rear view mirror. You should test every position for at least 25 seconds before trying another position.
- ▶ Note that some remote controls transmit only for a limited period, press button (6) on remote control (5) again before transmission ends.
- ▶ Align the aerial line of the door opener unit with the remote control.

ⓘ Support and additional information on programming:

- On the HomeLink® Hotline on (0) 08000 466 354 65 or +49 (0) 6838 907-277
- On the Internet at https://www.homelink.com

Opening or closing the garage door
Requirements:

- The corresponding button is programmed to operate the door.

- ▶ Press and hold buttons (1), (2) or (3) until the door opens or closes.
- ▶ If indicator lamp (4) flashes yellow after approximately 20 seconds: press and hold the previously pressed button again until the door opens or closes.

Clearing the garage door opener memory

- ▶ Press and hold buttons (1) and (3). Indicator lamp (4) lights up yellow.
- ▶ If indicator lamp (4) flashes green: release buttons (1) and (3). The entire memory has been deleted.

Electric parking brake

Electric parking brake function (applying automatically)

⚠ **WARNING** Risk of accident and injury due to children left unattended in the vehicle

If children are left unsupervised in the vehicle, they could, in particular:

- open doors, thereby endangering other persons or road users.
- get out and be struck by oncoming traffic.
- operate vehicle equipment and become trapped, for example.

In addition, the children could also set the vehicle in motion, for example by:

- releasing the parking brake.
- change the transmission position.
- start the vehicle.

- Never leave children unattended in the vehicle.
- When leaving the vehicle, always take the key with you and lock the vehicle.
- Keep the key out of reach of children.

This also applies to the Digital Vehicle Key if the "Digital Vehicle Key" function is activated via Mercedes me connect.

Vehicles with manual transmission:

If you have previously driven at a speed above 3 km/h and the vehicle then comes to a standstill, the electric parking brake is applied if one of the following conditions is fulfilled:

- The engine is switched off.
- The driver's door is opened.

The electric parking brake is also applied while the vehicle is kept stationary by the HOLD function if one of the following conditions is fulfilled:

- The engine is switched off.
- The seat belt tongue is not inserted in the seat belt buckle of the driver's seat and the driver's door is opened.
- There is a system malfunction.
- The power supply is insufficient.
- The vehicle is stationary for a lengthy period.

When the electric parking brake is applied, the red (P) indicator lamp appears in the instrument cluster.

If the electric parking brake is not applied when the driver's door is opened, the Risk of vehicle rolling away Apply parking brake See Owner's Manual message appears.

The electric parking brake is not automatically applied if the engine is switched off by the ECO start/stop function.

ⓘ To prevent application: pull the handle of the electric parking brake.

Vehicles with automatic transmission:

The electric parking brake is applied if the transmission is in position P and one of the following conditions is fulfilled:

- The engine is switched off.
- The seat belt tongue is not inserted in the seat belt buckle of the driver's seat and the driver's door is opened.

ⓘ To prevent application: pull the handle of the electric parking brake.

In the following situations, the electric parking brake is also applied:

- Active Distance Assist DISTRONIC is bringing the vehicle to a standstill.
- The HOLD function is keeping the vehicle stationary.
- Active Parking Assist is keeping the vehicle stationary.

This is the case if one of the following conditions is also fulfilled:

- The engine is switched off.
- The seat belt tongue is not inserted in the seat belt buckle of the driver's seat and the driver's door is opened.
- There is a system malfunction.
- The power supply is insufficient.
- The vehicle is stationary for a lengthy period.

When the electric parking brake is applied, the red (P) indicator lamp appears in the instrument cluster.

The electric parking brake is not automatically applied if the engine is switched off by the ECO start/stop function.

Electric parking brake function (releasing automatically)

The electric parking brake is released when the following conditions are fulfilled:

- The driver's door is closed.
- The engine is running.
- **Vehicles with manual transmission:** a gear has been selected, you release the clutch pedal and depress the accelerator pedal.
- The driver's door is closed.
- You apply the brakes and shift from neutral N into reverse gear R or a forward gear (1 - 6) when on level ground.
- **Vehicles with automatic transmission:** the transmission is in position D or R and you depress the accelerator pedal or you shift from transmission position P to D or R when on level ground with the driver's door closed.
- If the transmission is in position R, the tailgate must be closed.
- The seat belt tongue is inserted into the seat belt buckle of the driver's seat.

Vehicles with automatic transmission: if the seat belt tongue is not inserted into the seat belt buckle of the driver's seat, one of the following conditions must be fulfilled:

- You shift from transmission position P.
- You have previously driven at speeds greater than 3 km/h.

When the electric parking brake is released, the red (P) indicator lamp in the instrument cluster goes out.

Applying/releasing the electric parking brake manually

Applying

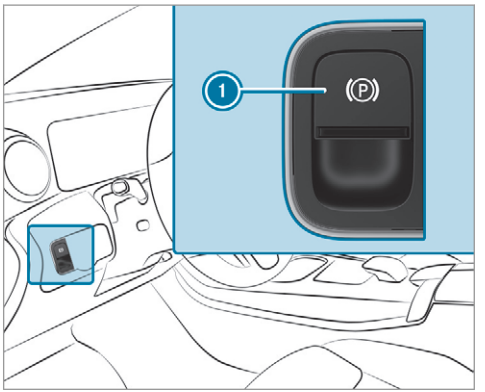

▶ Push handle 1.
The red (P) indicator lamp appears in the instrument cluster.

ⓘ The electric parking brake is only securely applied if the indicator lamp is lit continuously.

Releasing

▶ Switch on the ignition.

▶ Pull handle ❶.
The red Ⓟ indicator lamp in the instrument cluster goes out.

Emergency braking

▶ Press and hold handle ❶.
As long as the vehicle is driving, the Release parking brake message is displayed.

When the vehicle has been braked to a standstill, the electric parking brake is applied. The red Ⓟ indicator lamp appears in the instrument cluster.

Information on collision detection on a parked vehicle

If a collision is detected when the tow-away protection is primed on a locked vehicle, you will receive a notification in the multimedia system when you switch on the ignition.

You will receive information about the following points:

- The area of the vehicle that may have been damaged.
- The force of the impact.

The following situations can lead to inadvertent activation:

- The parked vehicle is moved, e.g. in a two-storey garage.

ⓘ Deactivate tow-away protection in order to prevent inadvertent activation. If you deactivate tow-away protection, collision detection will also be deactivated.

System limits

Detection may be restricted in the following situations:

- the vehicle is damaged without impact, e.g. if an outside mirror is torn off or the paint is damaged by a key
- an impact occurs at low speed
- the electric parking brake is not applied

Notes on parking up the vehicle

If you leave the vehicle parked up for longer than six weeks, it may suffer damage through disuse.

The 12 V battery may also be impaired or damaged by heavy discharging.

ⓘ Further information can be obtained at a qualified specialist workshop.

Standby mode (extension of the starter battery's period out of use)

Standby mode function

ⓘ This function is not available for all models.

If standby mode is activated, energy loss will be minimised during extended periods of non-operation.

Standby mode is characterised by the following:

- the starter battery is preserved.
- the maximum non-operational time appears in the media display.

- the connection to online services is interrupted.
- the ATA (anti-theft alarm system) is not available.
- the interior protection and tow-away protection functions are not available.
- the function for detecting collisions on a parked vehicle is not available.

If the following conditions are fulfilled, standby mode can be activated or deactivated using the multimedia system:

- The engine is switched off.
- The ignition is switched on.

Exceeding the vehicle's displayed non-operational time may cause inconvenience, i.e. it cannot be guaranteed that the starter battery will reliably start the engine.

The starter battery must be charged first in the following situations:

- The vehicle's non-operational time must be extended.
- The Battery charge insufficient for standby mode message appears in the media display.

ⓘ Standby mode is automatically deactivated when the ignition is switched on.

Activating/deactivating standby mode (parking up the vehicle)
Requirements:

- The engine is switched off.

Multimedia system:

→ ⌂ ▸▸ Settings ▸▸ Vehicle

▶ Activate or deactivate Standby mode.

▶ Select Yes.

Driving and driving safety systems

Driving systems and your responsibility

Your vehicle is equipped with driving systems which assist you in driving, parking and manoeuvring the vehicle. The driving systems are only aids. They are not a substitute for your attention to the surroundings and do not relieve you of your responsibility pertaining to road traffic law.

The driver is always responsible for maintaining a safe distance to the vehicle in front, for vehicle speed, for braking in good time and for staying in lane. Pay attention to the traffic conditions at all times and intervene when necessary. Be aware of the limitations regarding the safe use of these systems.

Driving systems can neither reduce the risk of accident if you fail to adapt your driving style nor override the laws of physics. They cannot always take into account road, weather or traffic conditions.

Information on vehicle sensors and cameras

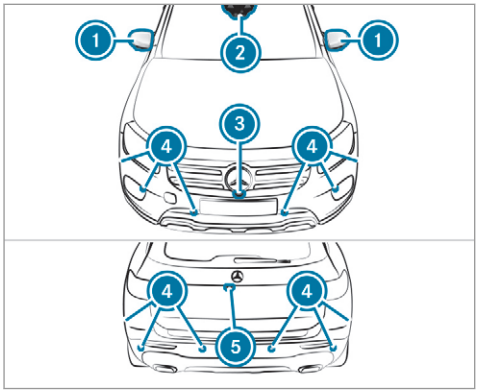

1 Cameras in the outside mirrors
2 Multifunction camera
3 Front camera
4 Ultrasonic sensors
5 Reversing camera

ⓘ Depending on the vehicle's equipment, the radar sensors are integrated behind the bumpers and/or behind the radiator grille.

Some driving and driving safety systems use cameras as well as radar or ultrasonic sensors to monitor the area in front of, behind or next to the vehicle.

Keep the areas around the sensors and cameras free of dirt, ice or slush (→ page 325). The cameras and sensors must not be covered, for example by bicycle racks, overhanging loads, stickers, foil or foils to protect against stone chipping. Additional licence plate brackets can impair the function of the ultrasonic sensors, in particular.

In the event of damage or a severe impact in the area of the sensors, have the function of the sensors checked at a qualified specialist workshop. Have damage or stone chipping in the area of the cameras repaired at a qualified specialist workshop. If the sensors or cameras are damaged, some driving systems and driving safety systems may no longer function properly.

Overview of driving systems and driving safety systems

- ABS (**A**nti-lock **B**raking **S**ystem) (→ page 204)
- Off-road ABS (→ page 204)
- BAS (**B**rake **A**ssist **S**ystem) (→ page 205)
- ESP® (**E**lectronic **S**tability **P**rogram) (→ page 205)
- ESP® Crosswind Assist (→ page 207)
- ESP® trailer stabilisation (→ page 207)
- EBD (**E**lectronic **B**rakeforce **D**istribution) (→ page 207)
- STEER CONTROL (→ page 207)
- Active Brake Assist (→ page 208)[1]
- Adaptive Brake Lights (→ page 212)
- Cruise control (→ page 213)
- Limiter (→ page 213)
- DSR (**D**ownhill **S**peed **R**egulation) (→ page 216)

1 This function includes subfunctions which are only available in conjunction with the Driving Assistance Package.

- Active Distance Assist DISTRONIC (→ page 217)[1]
- Active Speed Limit Assist (→ page 221)[2]
- Route-based speed adaptation (→ page 222)[2]
- Active Steering Assist (→ page 224)[2]
- Active Lane Change Assist (→ page 226)[2]
- Active Emergency Stop Assist (→ page 227)[2]
- Hill Start Assist (→ page 228)
- HOLD function (→ page 228)
- Start-off assist (→ page 229)
- Suspension with adaptive damping adjustment (→ page 230)
- Parking Assist PARKTRONIC (→ page 230)
- Reversing camera (→ page 235)
- 360° Camera (→ page 238)
- Active Parking Assist (→ page 241)
- ATTENTION ASSIST (→ page 247)
- Speed Limit Assist (country-dependent) (→ page 248)
- Traffic Sign Assist (→ page 250)[1]
- Blind Spot Assist and Active Blind Spot Assist with exit warning (→ page 252)[1]
- Active Lane Keeping Assist (→ page 255)[3]

Function of ABS

The Anti-lock Brake System (ABS) regulates the brake pressure in critical driving situations:

- During braking, e.g. at full brake application or insufficient tyre traction, the wheels are prevented from locking.
- Vehicle steerability while braking is ensured.

If ABS intervenes when braking, you will feel a pulsing in the brake pedal. The pulsating brake pedal can be an indication of hazardous road conditions and can serve as a reminder to take extra care while driving.

Functions of Off-road ABS

ⓘ Off-road ABS is activated automatically when you select the drive program.

Off-road ABS is specially adapted for driving off-road:

- The front wheels lock cyclically during braking.
- The braking distance is shortened due to the digging-in effect.

System limits

- Off-road ABS functions at speeds below 40 km/h.
- If Off-road ABS intervenes, the ability to steer may be restricted.

1 This function includes subfunctions which are only available in conjunction with the Driving Assistance Package.
2 This function is country-dependent and only available in conjunction with the Driving Assistance Package.
3 This function includes subfunctions which are only available in conjunction with the Driving Assistance Package or only available depending on the country.

Function of BAS

The Brake Assist System (BAS) supports your emergency braking situation with additional brake force.

If you depress the brake pedal quickly, BAS is activated:

- BAS automatically boosts the brake pressure.
- BAS can shorten the braking distance.
- ABS prevents the wheels from locking.

The brakes will function as usual once you release the brake pedal. BAS is deactivated.

Functions of ESP®

⚠ **WARNING** Risk of skidding if ESP® is deactivated

If you deactivate ESP®, ESP® cannot carry out vehicle stabilisation.

▶ ESP® should only be deactivated in the following situations.

Mercedes-AMG vehicles: observe the notes in the Supplement. You could otherwise fail to recognise dangers.

The Electronic Stability Program (ESP®) can monitor and improve driving stability and traction in the following situations within physical limits:

- When pulling away on wet or slippery carriageways.
- When braking.

If the vehicle deviates from the direction desired by the driver, ESP® can stabilise the vehicle by intervening in the following ways:

- One or more wheels are braked.
- The engine output is adapted according to the situation.

ESP® is deactivated if the OFF ESP® OFF warning lamp lights up continuously in the instrument cluster:

- Driving stability will no longer be improved.
- The drive wheels could spin.
- ETS/4ETS traction control is still active.

ⓘ When ESP® is deactivated, you are still assisted by ESP® when braking.

If the ESP® warning lamp flashes in the instrument cluster, one or several vehicle wheels has reached its grip limit:

- Adapt your driving style to suit the current road and weather conditions.
- Do not deactivate ESP®.
- Only depress the accelerator pedal as far as is necessary when pulling away.

It can be advantageous to deactivate ESP® in the following situations to improve traction:

- When using snow chains.
- In deep snow.
- On sand or gravel.

ⓘ Spinning the wheels results in a cutting action, which enhances traction.

If the ESP® warning lamp lights up continuously, ESP® is not available due to a malfunction.

Observe the following information:

- Indicator and warning lamps (→ page 440)

- Display messages (→ page 386)

ETS/4ETS (Electronic Traction System)

ETS/4ETS traction control is part of ESP® and makes it possible to pull away and accelerate on a slippery carriageway.

If you select the drive program, a special ETS system specifically suited to off-road terrain is automatically activated.

ETS/4ETS can improve the vehicle's traction by intervening in the following ways:

- The drive wheels are braked individually if they spin.
- More drive torque is transferred to the wheel or wheels with traction.

ESP® modes

Depending on the selected drive program, the appropriate ESP® mode will be activated automatically. ESP® adapts to different weather and road conditions as well as the driver's preferred driving style. You can select the drive programs using the DYNAMIC SELECT switch (→ page 180).

ESP® Comfort

- active in drive programs C and E
- balance between traction and stability
- recommended for all road surface conditions
- suitable for both dry and difficult road conditions, such as snow or ice, or when the road is wet from rain

ESP® Sport

- active in drive program S
- continues to offer stability but with a sporty setup
- allows the sporty driver a more active driving style
- only suitable for good road conditions, a dry road surface and a clear stretch of road

Off-road ESP®

- active in drive program
- intervenes later if there is oversteering or understeering, thus improving traction
- suitable for easily negotiable off-road terrain such as dirt tracks, gravel or sandy surfaces

Activating/deactivating ESP® (Electronic Stability Program)

Multimedia system:

Settings Quick access

ESP® can only be activated/deactivated using quick access when at least one other function is available in quick access. ESP® can otherwise be found in the Assistance menu.

Mercedes-AMG vehicles: observe the notes in the Supplement. You could otherwise fail to recognise dangers.

- Select ESP.
- Select On or Off.

ESP® is deactivated if the ESP® OFF warning lamp lights up continuously in the instrument cluster.

Observe the information on warning lamps and display messages which may be shown in the instrument cluster.

Function of ESP® Crosswind Assist

ESP® Crosswind Assist detects sudden gusts of side wind and helps the driver to keep the vehicle in the lane:

- ESP® Crosswind Assist is active at vehicle speeds between approx. 75 km/h and 200 km/h when driving straight ahead or cornering slightly.
- The vehicle is stabilised by means of a targeted and individual brake application on one side.

Function of ESP® trailer stabilisation

⚠ **WARNING** Risk of accident in poor road and weather conditions

In poor road and weather conditions, the trailer stabilisation cannot prevent lurching of the vehicle/trailer combination. Trailers with a high centre of gravity may tip over before ESP® detects this.

▶ Always adapt your driving style to suit the current road and weather conditions.

When driving with a trailer, ESP® can stabilise your vehicle if the trailer begins to swerve from side to side:

- ESP® trailer stabilisation is active above speeds of 65 km/h.
- Slight swerving is reduced by means of a targeted, individual brake application on one side.
- In the event of severe swerving, the engine output is also reduced and all wheels are braked.

ESP® trailer stabilisation may be impaired or may not function if:

- The trailer is not connected correctly or is not detected properly by the vehicle.

Function of EBD

Electronic Breakforce Distribution (EBD) is characterised by the following:

- Monitoring and regulating the brake pressure on the rear wheels.
- Improved driving stability when braking, especially on bends.

Function of STEER CONTROL

STEER CONTROL helps you by transmitting a noticeable steering force to the steering wheel in the direction required for vehicle stabilisation.

This steering recommendation is given particularly in the following situations:

- Both right wheels or both left wheels are on a wet or slippery road surface when you brake.
- The vehicle starts to skid.

System limits

STEER CONTROL may be impaired or may not function in the following situations:

- ESP® is deactivated.
- ESP® is malfunctioning.
- The steering is malfunctioning.

If ESP® is malfunctioning, you will be assisted further by the electric power steering.

Function of Active Brake Assist

Active Brake Assist consists of the following functions:

- Distance warning function
- Autonomous braking function
- Situation-dependent braking assistance
- **Vehicles with Driving Assistance Package:** Evasive Steering Assist and cornering function

Active Brake Assist can help you to minimise the risk of a collision with vehicles, cyclists or pedestrians, or reduce the effects of such a collision.

If Active Brake Assist has detected a risk of collision, a warning tone sounds and the distance warning lamp lights up in the instrument cluster.

Vehicles with PRE-SAFE®: depending on the country, an additional haptic warning occurs in the form of slight, repeated tensioning of the seat belt.

If you do not react to the warning, autonomous braking can be initiated in critical situations.

In especially critical situations, Active Brake Assist can initiate autonomous braking directly. In this case, the warning lamp and warning tone occur simultaneously with the braking application.

If you apply the brake yourself in a critical situation or apply the brake during autonomous braking, situation-dependent braking assistance occurs. The brake pressure increases up to maximum full-stop braking if necessary.

Observe the notes on driving systems and your responsibility; you may otherwise fail to recognise dangers (→ page 202).



If autonomous braking or situation-dependent braking assistance has occurred, display 1 appears in the multifunction display and then automatically goes out after a short time.

If the autonomous braking function or the situation-dependent braking assistance is triggered, additional preventive measures for occupant protection (PRE-SAFE®) may also be initiated.

WARNING Risk of an accident caused by limited detection performance of Active Brake Assist

Active Brake Assist cannot always clearly identify objects and complex traffic situations.

- Always pay careful attention to the traffic situation; do not rely on Active Brake Assist alone. Active Brake Assist is only an aid. The driver is responsible for maintaining a sufficiently safe distance to the vehicle in front, vehicle speed and for braking in good time.
- Be prepared to brake or swerve if necessary.

Also observe the system limits of Active Brake Assist.

The individual subfunctions are available in various speed ranges:

The distance warning function can issue a warning in the following situations:

- From approximately 30 km/h, if over several seconds the distance maintained to the vehicle travelling in front is insufficient for the driven speed, the distance warning lamp lights up in the instrument cluster.
- From approximately 7 km/h, if your vehicle is critically close to a vehicle, cyclist or pedestrian, you will hear an intermittent warning tone and the distance warning lamp lights up in the instrument cluster.

  Vehicles with PRE-SAFE®: depending on the country, an additional haptic warning occurs in the form of slight, repeated tensioning of the seat belt.

Brake immediately or take evasive action, provided it is safe to do so and the traffic situation allows this.

Distance warning function (vehicles without Driving Assistance Package)

The distance warning function can aid you in the following situations with an intermittent warning tone and a warning lamp:

- at speeds up to approximately 250 km/h when approaching vehicles ahead
- at speeds up to approximately 80 km/h when approaching stationary vehicles, moving pedestrians and cyclists ahead
- at speeds up to approximately 60 km/h when approaching crossing cyclists

Distance warning function (vehicles with Driving Assistance Package)

The distance warning function can aid you in the following situations with an intermittent warning tone and a warning lamp:

- at speeds up to approximately 250 km/h when approaching vehicles ahead
- at speeds up to approximately 100 km/h when approaching stationary vehicles

- at speeds up to approximately 80 km/h when approaching moving pedestrians and cyclists ahead
- at speeds up to approximately 70 km/h when approaching stationary pedestrians, crossing vehicles and stationary and crossing cyclists

Autonomous braking function (vehicles without Driving Assistance Package)

If the vehicle is travelling at speeds above approximately 7 km/h, the autonomous braking function may intervene in the following situations:

- at speeds up to approximately 200 km/h when approaching vehicles ahead
- at speeds up to approximately 80 km/h when approaching cyclists ahead
- at speeds up to approximately 60 km/h when approaching moving pedestrians and crossing cyclists
- at speeds up to approximately 50 km/h when approaching stationary vehicles

Autonomous braking function (vehicles with Driving Assistance Package)

If the vehicle is travelling at speeds above approximately 7 km/h, the autonomous braking function may intervene in the following situations:

- at speeds up to approximately 250 km/h when approaching vehicles ahead
- at speeds up to approximately 100 km/h when approaching stationary vehicles
- at speeds up to approximately 80 km/h when approaching cyclists ahead
- at speeds up to approximately 70 km/h when approaching stationary and moving pedestrians, crossing vehicles and stationary and crossing cyclists

Situation-dependent braking assistance (vehicles without Driving Assistance Package)

The situation-dependent braking assistance can intervene from a speed of approximately 7 km/h in the following situations:

- at speeds up to approximately 250 km/h when approaching vehicles ahead
- at speeds up to approximately 80 km/h when approaching stationary vehicles and vehicles ahead
- at speeds up to approximately 60 km/h when approaching moving pedestrians and crossing cyclists

Situation-dependent braking assistance (vehicles with Driving Assistance Package)

The situation-dependent braking assistance can intervene from a speed of approximately 7 km/h in the following situations:

- at speeds up to approximately 250 km/h when approaching vehicles ahead
- at speeds up to approximately 100 km/h when approaching stationary vehicles

- at speeds up to approximately 80 km/h when approaching cyclists ahead
- at speeds up to approximately 60 km/h when approaching stationary and moving pedestrians, crossing vehicles and stationary and crossing cyclists

Cancelling a brake application of Active Brake Assist

You can cancel a brake application of Active Brake Assist at any time by:

- Activating kickdown.
- Releasing the brake pedal.

Active Brake Assist may cancel the brake application when one of the following conditions is fulfilled:

- You manoeuvre to avoid the obstacle.
- There is no longer a risk of collision.
- An obstacle is no longer detected in front of your vehicle.

Evasive Steering Assist (only vehicles with Driving Assistance Package)

Evasive Steering Assist has the following characteristics:

- The ability to detect stationary or moving pedestrians.
- Assistance through power-assisted steering if it detects a swerving manoeuvre.
- Activation by an abrupt steering movement during a swerving manoeuvre.
- Assistance during swerving and straightening of the vehicle.
- Reaction from a speed of approximately 20 km/h up to a speed of approximately 70 km/h.

You can prevent the assistance at any time by actively steering.

Cornering function (only vehicles with Driving Assistance Package)

If a danger of collision from an oncoming vehicle is detected when turning across an oncoming lane, autonomous braking can be initiated at speeds below 15 km/h before you have left the lane in which you are driving.

⚠ **WARNING** Risk of accident despite Evasive Steering Assist

Evasive Steering Assist cannot always recognise objects or complex traffic situations clearly.

Moreover, the steering support provided by Evasive Steering Assist is not sufficient to avoid a collision.

- ▶ Always pay careful attention to the traffic situation; do not rely on Evasive Steering Assist alone.
- ▶ Be prepared to brake or swerve if necessary.
- ▶ End the support by actively steering in non-critical situations.
- ▶ Drive at an appropriate speed if there are pedestrians close to the path of your vehicle.

System limits

Full system performance is not available for a few seconds after switching on the ignition or after driving off.

The system may be impaired or may not function in the following situations:

- In snow, rain, fog, heavy spray, if there is glare, in direct sunlight or in greatly varying light conditions.
- If the sensors are dirty, misted up, damaged or covered.
- If the sensors are impaired due to interference from other radar sources, e.g. strong radar reflections in multi-storey car parks.
- If a loss of tyre pressure or a defective tyre has been detected and displayed.
- If DSR is active.
- In complex traffic situations where objects cannot always be clearly identified.
- If pedestrians or vehicles move quickly into the sensor detection range.
- If pedestrians are hidden by other objects.
- If the typical outline of a pedestrian cannot be distinguished from the background.
- If a pedestrian is not detected as such, e.g. due to special clothing or other objects.
- On bends with a tight radius.

ⓘ The Active Brake Assist sensors adjust automatically while a certain distance is being driven after the vehicle has been delivered. Active Brake Assist is unavailable or only partially available during this teach-in period.

Setting Active Brake Assist

Requirements:

- The ignition is switched on.

Multimedia system:

↳ ⌂ ▸▸ Settings ▸▸ Assistance ▸▸ Active Brake Assist

▶ Select the desired setting.
The setting is retained when the engine is next started.

Deactivating Active Brake Assist

ⓘ It is recommended that you always leave Active Brake Assist activated.

▶ Select Off.
The distance warning function, the autonomous braking function and the Evasive Steering Assist are deactivated.

When the vehicle is next started, the middle setting is automatically selected.

ⓘ If Active Brake Assist is deactivated, the OFF symbol appears in the status bar of the multifunction display.

Function of Adaptive Brake Lights

Adaptive Brake Lights warn following traffic in an emergency braking situation with the following actions:

- By flashing the brake lamps
- By activating the hazard warning lights

If the vehicle is braked sharply from speeds above 50 km/h, the brake lamps flash rapidly.

This provides traffic travelling behind you with an even more noticeable warning.

If the vehicle is travelling at speeds of more than 70 km/h at the beginning of the brake application, the hazard warning lights switch on once the vehicle is stationary. When you pull away again, the hazard warning lights will switch off automatically at approximately 10 km/h. You can also switch off the hazard warning lights using the hazard warning button.

Cruise control and limiter

Function of cruise control

Cruise control regulates the speed to the value selected by the driver.

If you accelerate to overtake, for example, the stored speed is not deleted. If you remove your foot from the accelerator pedal after overtaking, cruise control will resume speed regulation back to the stored speed.

Cruise control is operated using the corresponding steering wheel buttons. You can store any speed above 20 km/h up to the maximum design speed or up to the set winter tyre limit.

Observe the notes on driving systems and your responsibility; you may otherwise fail to recognise dangers (→ page 202).

Mercedes-AMG vehicles: cruise control is available up to a maximum speed of 250 km/h.

Displays on the multifunction display

- (grey): cruise control is selected but not yet active, or temporarily passive.
- (green): cruise control is active.

A stored speed appears along with the display.

ⓘ The segments extending from the current stored speed to the end of the scale, or to the set winter tyre limit, light up in the speedometer.

System limits

Cruise control may be unable to maintain the stored speed on uphill gradients. The stored speed is resumed when the gradient evens out.

Change into a lower gear in good time on long and steep downhill gradients. Take particular note of this when driving a laden vehicle. By doing so, you will make use of the engine's braking effect. This relieves the load on the brake system and prevents the brakes from overheating and wearing too quickly.

Do not use cruise control in the following situations:

- In traffic situations which require frequent changes of speed, e.g. in heavy traffic, on winding roads.
- On slippery roads. Accelerating can cause the drive wheels to lose traction and the vehicle could then skid.
- If you are driving when visibility is poor.

Function of the limiter

The limiter restricts the speed of the vehicle. To reduce the speed to the set speed, the limiter applies the brakes automatically.

You can limit the speed as follows:

- **Variable:** for a short-term speed restriction, e.g. in built-up areas.
- **Permanent:** for a longer-term speed restriction, e.g. in winter tyre mode.

The variable limiter is operated using the corresponding steering wheel buttons. You can store any speed above 20 km/h up to the maximum design speed or up to the set winter tyre limit. You can also perform settings while the vehicle is stationary if the vehicle has been started.

Observe the notes on driving systems and your responsibility; you may otherwise fail to recognise dangers (→ page 202).

Mercedes-AMG vehicles: the limiter is available up to a maximum speed of 250 km/h.

Displays on the multifunction display

- LIM (grey): variable limiter is selected but not yet activated.
- LIM (green): variable limiter is activated.

A stored speed appears along with the LIM display. The segments in the speedometer light up, up to the currently stored speed.

ⓘ When the driving speed is greater than the stored speed, display LIM flashes.

Kickdown

If you depress the accelerator pedal beyond the pressure point (kickdown), the variable limiter switches to passive mode. The Limiter passivemessage appears in the multifunction display.

After completion of kickdown, the variable limiter is activated again in the following situations:

- If the vehicle speed drops below the stored speed.
- If the stored speed is called up.
- If you store a new speed.

Operating cruise control or the variable limiter

⚠ **WARNING** Risk of accident due to stored speed

If you call up the stored speed and this is lower than your current speed, the vehicle decelerates.

▶ Take into account the traffic situation before calling up the stored speed.

Requirements:

Cruise control

- Cruise control is selected.
- ESP® must be activated, but not intervening.
- The vehicle speed is at least 20 km/h.
- The transmission is in position D.

Variable limiter

- The variable limiter is selected.

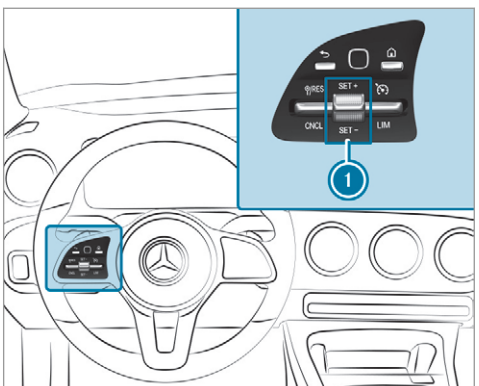

- **To operate cruise control or the variable limiter:** press the rocker switch on the steering wheel control unit up or down to the desired position.

Switching between cruise control and the variable limiter

- **To select cruise control:** select [ ] with the right rocker switch.
- **To select the variable limiter:** select LIM with the right rocker switch.

ⓘ Vehicles with Active Distance Assist DISTRONIC: the variable limiter is selected by a different button (→ page 219).

Activating cruise control or the variable limiter

- Press rocker switch 1 up SET/+ or down SET/–.
  The current vehicle speed is stored and the vehicle maintains this speed (cruise control) or does not exceed it (variable limiter).

or

- Select RES/ with the left rocker switch.
  The last stored speed is called up and the vehicle maintains this speed (cruise control) or does not exceed it (variable limiter).
  If the last stored speed has previously been deleted, the current vehicle speed is stored.

ⓘ When you switch off the vehicle, the last speed stored is cleared.
When you activate cruise control or Active Distance Assist DISTRONIC, the last speed stored for the variable limiter is cleared.

Increasing/decreasing the stored speed

- 1 km/h: press rocker switch 1 up SET/+ or down SET/– to the pressure point, or press and hold (increments of 1-km/h).

or

- 10 km/h: press and hold rocker switch 1 up SET/+ or down SET/– beyond the pressure point (increments of 10 km/h).

or

- Accelerate the vehicle to the desired speed and press rocker switch 1 up SET/+.

Adopting a detected speed

- Activate cruise control or the variable limiter.
- If a traffic sign has been detected and is displayed in the instrument cluster: select RES/ with the left rocker switch.
  The maximum permissible speed shown by the traffic sign is stored and the vehicle maintains or does not exceed this speed.

Deactivating cruise control or the variable limiter

- Select CNCL with the left rocker switch.

ⓘ If you brake, deactivate ESP® or if ESP® intervenes, cruise control is deactivated. The variable limiter is not deactivated.

Permanent limiter

If the vehicle should never exceed a specific speed (e.g. for driving in winter tyre mode), you can set this speed with the permanent limiter.

You do this by limiting the speed to a value between 160 km/h and 240 km/h in the multimedia system (→ page 216).

Shortly before the set speed is reached, it appears in the multifunction display. When you confirm the message, display messages no lon-

ger appear until you switch off the vehicle. The speed will only be displayed again once the vehicle has been restarted or if the set speed is changed.

The permanent limiter does not switch to passive mode even during kickdown and the driven speed remains below the set speed.

Setting the speed limitation for winter tyres
Multimedia system:

→ ⌂ ▸▸ Settings ▸▸ Vehicle ▸▸ Winter tyres limit

▶ Select a speed or deactivate the function.

DSR (Downhill Speed Regulation)

Function of DSR (Downhill Speed Regulation)
DSR is an aid to assist you when driving downhill. It keeps the speed of travel at the selected target speed. The steeper the downhill gradient, the greater the DSR braking effect on the vehicle. On flat stretches of road and uphill gradients, the DSR brakes the vehicle minimally or not at all.

When DSR is activated and the transmission is in position D, R or N, DSR controls the driving speed. The target speed can be set to a value between 2 km/h and 18 km/h. By braking or accelerating, you can drive at a higher or lower speed than the target speed at any time.

DSR is deactivated automatically if you drive at speeds greater than 45 km/h or select drive program S. The DSR off message then appears in the multifunction display. The status indicator in the multifunction display disappears. You also hear a warning tone.

Information on DSR

⚠ **WARNING** Risk of skidding and accident when DSR is activated on slippery road surfaces

If the driven speed and the target speed differ, the wheels may lose traction.

▶ Take into account the road surface and the difference between the driving speed and target speed before activating DSR.

Observe the notes on driving systems and your responsibility; you may otherwise fail to recognise dangers (→ page 202).

You are always responsible for keeping control of the vehicle and for assessing whether the downhill gradient can be negotiated. Depending on road surface and tyres, DSR may not always be able to keep to the target speed. Select a target speed suitable for the environmental conditions and also apply the brakes yourself if required.

Activating or deactivating DSR (Downhill Speed Regulation)
Requirements:

- You are driving at 40 km/h or slower.
  If the current vehicle speed is too high, the Max. speed 40 km/h message appears in the multifunction display.
- Active Distance Assist DISTRONIC is deactivated.

Multimedia system:

↝ ⌂ ▸▸ Settings ▸▸ Quick access

▶ Select DSR.
A status display appears in the multifunction display when the function is activated.

Changing the target speed

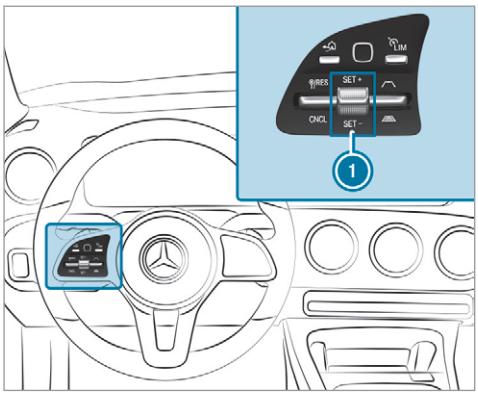

▶ **To increase/reduce the target speed:** press rocker switch 1 up SET/+ or down SET/– to the point of resistance.
The selected target speed increases or decreases by 1 km/h and appears along with the DSR symbol in the multifunction display.

Active Distance Assist DISTRONIC

Function of Active Distance Assist DISTRONIC

Active Distance Assist DISTRONIC maintains the set speed on free-flowing roads. If vehicles in front are detected, the set distance is maintained, if necessary, until the vehicle comes to a halt. The vehicle accelerates or brakes depending on the distance to the vehicle in front and the set speed. The speed and distance to the vehicle in front are set and saved using the steering wheel.

Available speed range:

- **Vehicles without Driving Assistance Package:** 20 km/h - 200 km/h
- **Vehicles with Driving Assistance Package:** 20 km/h - 210 km/h

Other features of Active Distance Assist DISTRONIC:

- Adjusts the driving style depending on the selected drive program (fuel efficient, comfortable or dynamic)
- Initiates acceleration to the stored speed if the turn signal indicator is switched on to change to the overtaking lane
- **Vehicles with Driving Assistance Package:**
  - Reacts to stationary vehicles detected in urban speed ranges (except bicycles and motorcycles)
  - Takes one-sided overtaking restrictions into account on motorways or on multi-lane roads with separate carriageways (country-dependent)

Vehicles with Active Parking Assist and Driving Assistance Package: if the vehicle has been braked to a standstill on multi-lane, separate carriageways by Active Distance Assist DISTRONIC, it can automatically follow the vehicle in front, driving off again within 30 seconds.

If a critical situation is detected when driving off, a visual and acoustic warning is given indicating that the driver must now take control of the vehicle. The vehicle is not accelerated any further.

Observe the notes on driving systems and your responsibility; you may otherwise fail to recognise dangers (→ page 202).

Active Distance Assist DISTRONIC displays in the instrument cluster

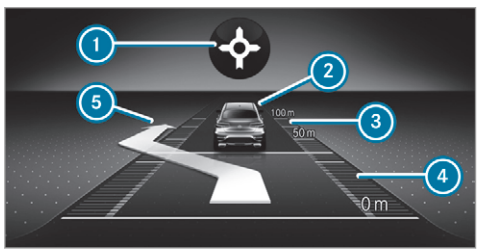

Assistance graphic

1. Route-based speed adaptation: type of route event (→ page 222)
2. Vehicle in front
3. Distance indicator
4. Set specified distance
5. Active Lane Change Assist lane change display

Permanent status display of Active Distance Assist DISTRONIC

- (white): Active Distance Assist DISTRONIC selected, specified distance set
- (green): Active Distance Assist DISTRONIC active, specified distance set and vehicle detected
- : Route-based speed adaptation active (→ page 222).

The stored speed is shown along with the permanent status display and highlighted on the speedometer. When Active Distance Assist DISTRONIC is passive, the speed is greyed out.

ⓘ On motorways or high-speed major roads, the green vehicle symbol is displayed cyclically when the vehicle is ready to pull away.

ⓘ If you depress the accelerator pedal beyond the setting of the Active Distance Assist DISTRONIC, the system is switched to passive mode. The suspendedmessage appears in the multifunction display.

Active Distance Assist DISTRONIC display in the speedometer

The stored speed is highlighted on the speedometer. If the speed of the vehicle in front or the speed adjustment is less than the stored speed due to the route event ahead, the segments in the speedometer light up. Deactivation of Active Distance Assist DISTRONIC, as well as alterations to the speed due to manual or automatic adoption of the maximum permissible speed, are displayed in the control feedback of the multifunction display on a single line.

System limits

The system may be impaired or may not function in the following situations, for example:

- In snow, rain, fog, heavy spray, if there is glare, in direct sunlight or in greatly varying light conditions.
- If there is swirling dust, e.g. when driving offroad or on sandy surfaces.

- The windscreen in the area of the camera is dirty, misted up, damaged or covered.
- If the radar sensors are dirty or covered.
- In multi-storey car parks or on roads with steep uphill or downhill gradients.
- If there are narrow vehicles in front, such as bicycles or motorcycles.

In addition, on slippery roads, braking or accelerating can cause one or several wheels to lose traction and the vehicle could then skid.

Do not use Active Distance Assist DISTRONIC in these situations.

⚠ WARNING Risk of accident from acceleration or braking by Active Distance Assist DISTRONIC

Active Distance Assist DISTRONIC may accelerate or brake in the following cases, for example:

- If the vehicle pulls away using Active Distance Assist DISTRONIC.
- If the stored speed is called up and is considerably faster or slower than the currently driven speed.
- If Active Distance Assist DISTRONIC no longer detects a vehicle in front or does not react to relevant objects.

▶ Always carefully observe the traffic conditions and be ready to brake at all times.

▶ Take into account the traffic situation before calling up the stored speed.

⚠ WARNING Risk of accident due to insufficient deceleration by Active Distance Assist DISTRONIC

Active Distance Assist DISTRONIC brakes your vehicle with up to 50% of the possible deceleration. If this deceleration is not sufficient, Active Distance Assist DISTRONIC alerts you with a visual and acoustic warning.

▶ Adjust your speed and maintain a suitable distance from the vehicle in front.

▶ Brake the vehicle yourself and/or take evasive action.

⚠ WARNING Risk of accident if detection function of Active Distance Assist DISTRONIC is impaired

Active Distance Assist DISTRONIC does not react or has a limited reaction:

- when driving on a different lane or when changing lanes
- to pedestrians, animals, bicycles or stationary vehicles, or unexpected obstacles
- to complex traffic conditions
- to oncoming vehicles and crossing traffic

As a result, Active Distance Assist DISTRONIC may neither give warnings nor intervene in such situations.

▶ Always observe the traffic conditions carefully and react accordingly.

Operating Active Distance Assist DISTRONIC
Requirements:

- The electric parking brake is released.
- ESP® is activated and is not intervening.
- The transmission is in position D.
- The driver's door is closed.
- Check of the radar sensor system has been successfully completed.
- Parking Assist PARKTRONIC is not being used to park the vehicle or to exit from a parking space.
- DSR is deactivated.

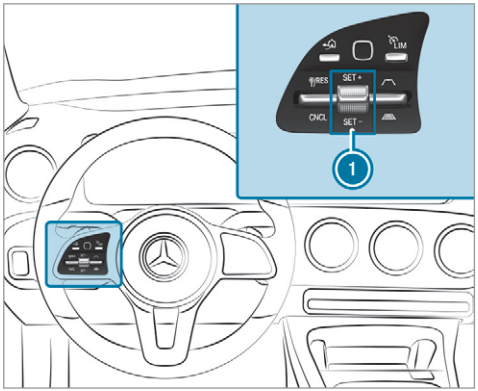

▶ **To operate Active Distance Assist DISTRONIC:** press the rocker switch on the steering wheel control unit up or down to the desired position.

Switching between Active Distance Assist DISTRONIC and the limiter

▶ Press the button.

Activating the variable limiter or Active Distance Assist DISTRONIC

▶ **To activate without a stored speed:** press rocker switch 1 up SET/+ or down SET/–, or select RES/ with the left rocker switch.

or

▶ **To activate with a stored speed:** select RES/ with the left rocker switch.

▶ **Active Distance Assist DISTRONIC:** remove your foot from the accelerator pedal.
The current vehicle speed is stored and maintained (Active Distance Assist DISTRONIC) or limited (variable limiter) by the vehicle.

Adopting a detected speed limit

▶ Activate Active Distance Assist DISTRONIC.

▶ If a traffic sign has been detected and is displayed in the instrument cluster: select RES/ with the left rocker switch.
The maximum permissible speed on the traffic sign is adopted as the stored speed. The vehicle adapts its speed to that of the vehicle in front, but only up to the stored speed.

Pulling away with Active Distance Assist DISTRONIC

- Activate Active Distance Assist DISTRONIC and remove your foot from the brake pedal.
- Select RES/ with the left rocker switch.

or

- Depress the accelerator pedal briefly and firmly.
  The functions of Active Distance Assist DISTRONIC continue to be carried out.

Deactivating Active Distance Assist DISTRONIC

⚠ **WARNING** Risk of accident due to Active Distance Assist DISTRONIC still being activated when you leave the driver's seat

If you leave the driver's seat while the vehicle is being braked by Active Distance Assist DISTRONIC only, the vehicle can roll away.

- Always deactivate Active Distance Assist DISTRONIC and secure the vehicle to prevent it from rolling away before you leave the driver's seat.
- Select CNCL with the left rocker switch.

ⓘ If you brake, deactivate ESP® or if ESP® intervenes, Active Distance Assist DISTRONIC is deactivated.

Increasing/decreasing the stored speed

- 1 km/h: press rocker switch ① up SET/+ or down SET/– to the pressure point, or press and hold (increments of 1 km/h).

or

- 10 km/h: press rocker switch ① up SET/+ or down SET/– beyond the pressure point, or press and hold (increments of 10 km/h).

or

- Accelerate the vehicle to the desired speed and press rocker switch ① up SET/+.

Changing the specified distance to the vehicle in front

- **To reduce the specified distance:** press the right rocker switch up (⟨).
- **To increase the specified distance:** press the right rocker switch down (⟩).

Function of Active Speed Limit Assist

If speed limit change between 20 km/h and 130 km/h is detected and the automatic adoption of speed limits is active, it will be automatically adopted as the stored speed (→ page 251).

The driven speed is adjusted when the vehicle is level with the traffic sign at the latest. In the case of signs indicating entry into an urban area, the speed is adapted according to the speed permitted within the urban area. The speed limit display in the Instrument Display is always updated when the vehicle is level with the traffic sign.

If there is no speed restriction on an unlimited stretch of road (e.g. on a motorway), the recommended speed is automatically adopted as the stored speed. The system uses the speed stored on an unlimited stretch of road as the recommended speed. If you do not alter the stored speed on an unlimited stretch of road, the recommended speed is 130 km/h.

If Active Distance Assist DISTRONIC has been put into passive mode by pressing the accelerator pedal, only speed limits which are higher than the set speed are adopted.

Observe the notes on driving systems and your responsibility; you may otherwise fail to recognise dangers (→ page 202).

System limits

The system limits of Traffic Sign Assist apply to the detection of traffic signs (→ page 250).

Speed limits below 20 km/h are not automatically adopted by the system as the stored speed. Temporary speed restrictions (e.g. for a certain time or due to weather conditions) cannot be properly detected by the system. The maximum permissible speed applying to a vehicle with a trailer is not detected by the system.

Adjust the speed in these situations.

⚠ **WARNING** Risk of accident due to Active Speed Limit Assist adapting the vehicle's speed

The speed adopted by Active Speed Limit Assist may be too high or incorrect in some individual cases, such as:

- at speed limits below 20 km/h
- in wet conditions or in fog
- when towing a trailer

▶ Ensure that the driven speed complies with traffic regulations.

▶ Adjust the driving speed to suit current traffic and weather conditions.

Function of route-based speed adaptation

When Active Distance Assist DISTRONIC is activated, the vehicle speed will be adapted accordingly to the route events ahead. Depending on the drive program selected, the vehicle negotiates a route event ahead in a fuel-saving, comfortable or dynamic manner. When the route event has been passed, the vehicle accelerates again to the stored speed. The set distance to the vehicle in front, vehicles detected ahead and speed restrictions ahead are taken into account.

Route-based speed adaptation can be configured in the multimedia system (→ page 223).

The following route events are taken into account:

- Bends
- T-junctions, roundabouts and toll stations
- Turns and exits
- Traffic jams ahead (only with Live Traffic)

ⓘ When the toll station is reached, Active Distance Assist DISTRONIC adopts the speed as the stored speed.

Also, the speed is reduced if the turn signal indicator to change lanes is switched on and one of the following situations is detected:

- Turning off at junctions
- Driving on slowing-down lanes
- Driving on lanes adjacent to slowing-down lanes

The driver is responsible for choosing the right speed and observing other road users. This applies in particular to junctions, roundabouts and traffic lights, as route-based speed adaptation does not brake the vehicle to a standstill.

When route guidance is active, the first speed adjustment is carried out automatically. If the turn signal indicator is switched on, the selected route is confirmed and further speed adjustment is activated.

Speed adaptation is cancelled in the following cases:

- If the turn signal indicator is switched off before the route event.
- If the driver depresses the accelerator or brake pedal during the process.

System limits

Route-based speed adaptation does not take right of way regulations into account. The driver is responsible for complying with road traffic regulations and driving at a suitable speed.

In difficult conditions, the speed selection made by the system may not always be suitable:

- unclear roads
- road narrowing
- wet road surfaces, snow or ice
- when towing a trailer

In these situations the driver must intervene accordingly.

⚠ **WARNING** Risk of accident in spite of route-based speed adaptation

Route-based speed adaptation can malfunction or be temporarily unavailable in the following situations:

- If the driver does not follow the calculated route
- If map data is not up-to-date or available
- In the event of roadworks
- In bad weather or road conditions
- If the accelerator pedal is depressed
- In the event of electronically displayed speed limitations

▶ Adapt the speed to the traffic situation.

Setting route-based speed adaptation

Requirements:

- Active Distance Assist DISTRONIC is activated.

Multimedia system:

↝ 🏠 ⏩ Settings ⏩ Assistance ⏩ Route-based speed adapt.

▶ Activate or deactivate the function. When the function is active, the vehicle speed is adjusted depending on the route events ahead.

ⓘ Further information on the route-based speed adaptation (→ page 222).

Active Steering Assist

Function of Active Steering Assist

Active Steering Assist is only available up to a speed of 210 km/h. The system helps you to stay in the centre of the lane by means of moderate steering interventions. Depending on the speed driven, Active Steering Assist uses the vehicles ahead and lane markings as a reference.

ⓘ Depending on the country, in the lower speed range Active Steering Assist can use the surrounding traffic as a reference. If necessary, Active Steering Assist can then also provide assistance when driving outside the centre of the lane, for example to form a rescue lane.

If the detection of lane markings and vehicles ahead is impaired, Active Steering Assist switches to passive mode. The system provides no support in this case.

Status display of Active Steering Assist in the multifunction display

- (grey): activated and passive
- (green): activated and active
- (red): system limits detected
- (white, red hands): "hands on the steering wheel" prompt

ⓘ During the transition from active to passive status, the symbol is shown as enlarged and flashing. Once the system is passive, the symbol is shown as grey in the multifunction display.

ⓘ Depending on the selected vehicle settings, Active Steering Assist may be unavailable.

Steering and touch detection

The driver is required to keep their hands on the steering wheel at all times and be able to intervene at any time to correct the course of the vehicle and keep it in lane. The driver must expect a change from active to passive mode or vice versa at any time.

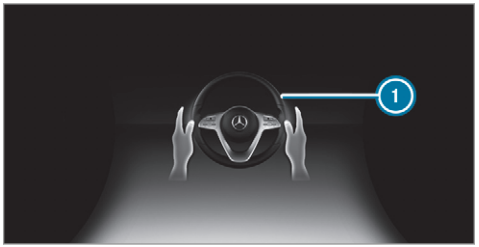

If the system detects that the driver has not steered the vehicle for a considerable period of time or has removed their hands from the steering wheel, display 1 appears. If the driver still does not steer the vehicle, a warning tone sounds in addition to the visual warning message.

If the driver does not react to this warning for a considerable period, an emergency stop is initiated (→ page 227).

The warning is not issued or is stopped when the driver gives confirmation to the system:

- The driver steers the vehicle.

- The driver presses a steering wheel button or operates Touch Control.

If Active Steering Assist detects that a system limit has been reached, a visual warning is issued and a warning tone sounds.

Observe the notes on driving systems and your responsibility; you may otherwise fail to recognise dangers (→ page 202).

System limits

Active Steering Assist has a limited steering torque for lateral guidance. In some cases, the steering intervention is not sufficient to keep the vehicle in the lane or to drive through exits.

The system may be impaired or may not function in the following instances:

- There is poor visibility, e.g. due to snow, rain, fog, heavy spray, greatly varying light conditions or strong shadows on the carriageway.
- There is glare, e.g. from oncoming traffic, direct sunlight or reflections.
- Insufficient road illumination.
- The windscreen is dirty, misted up, damaged or covered in the vicinity of the camera, e.g. by a sticker.
- No, or several, unclear lane markings are present for one lane, or the markings change quickly, for example, in a construction area or junctions.
- The lane markings are worn away, dark or covered up, e.g. by dirt or snow.
- If the distance to the vehicle in front is too short and thus the lane markings cannot be detected.
- The road is narrow and winding.
- There are obstacles on the lane or projecting out into the lane, such as object markers.

The system does not provide assistance in the following conditions:

- On tight bends and when turning.
- When crossing junctions.
- At roundabouts or toll stations.
- When towing a trailer.
- When the tyre pressure is too low.

⚠ WARNING Risk of accident if Active Steering Assist unexpectedly stops functioning

If the system limits of Active Steering Assist are reached there is no guarantee that the system will remain active or will keep the vehicle in lane.

- ▶ Always keep your hands on the steering wheel and observe the traffic carefully.
- ▶ Always steer the vehicle paying attention to traffic conditions.

⚠ WARNING Risk of accident if Active Steering Assist unexpectedly intervenes

The detection of lane markings and objects may malfunction and cause unexpected steering interventions.

- ▶ Steer according to traffic conditions.

Activating/deactivating Active Steering Assist

Requirements:

- ESP® is activated, but is not intervening.

- Active Distance Assist DISTRONIC is activated.

Multimedia system:

→ ⌂ ›› Settings ›› Quick access

▶ Select Act. Steer. Asst.

Function of Active Lane Change Assist

Active Lane Change Assist supports the driver when changing lanes by applying steering torque if the driver operates a turn signal indicator.

Observe the notes on driving systems and your responsibility; you may otherwise fail to recognise dangers (→ page 202).

Assistance when changing lanes is provided if all the following conditions are met:

- You are driving on a motorway or road with multiple lanes in the direction of travel.
- The neighbouring lane is separated by a broken lane marking.
- No vehicle is detected in the adjacent lane.
- Active Lane Change Assist is switched on in the multimedia system.
- Active Steering Assist is activated and active.

If no vehicle is detected in the adjacent lane and a lane change is permitted, the lane change begins after the driver has activated the turn signal indicator. This is shown to the driver with a green arrow next to the steering wheel symbol. The Lane change to the leftmessage, for example, also appears. If Active Lane Change Assist has been activated with the turn signal indicator but a lane change is not immediately possible, a grey arrow appears next to the steering wheel symbol, which remains green.

When the lane change assistance starts, the turn signal indicator is automatically activated along with the display in the multifunction display.

If the assistance graphic is shown when changing lanes, the lane change display appears with an additional arrow pointing towards the adjacent lane (→ page 217)

If a lane change is not possible, the arrow is faded out after a few seconds and a new lane change must be initiated. An immediate lane change is only possible on motorway sections without speed limits.

If the system is impaired, Active Lane Change Assist may be cancelled. The Lane change cancelled message appears in the multifunction display.

In addition, a warning tone may sound.

⚠ WARNING Risk of accident when changing lane to an occupied adjacent lane

Lane Change Assist cannot always clearly detect if the adjacent lane is free.

The lane change might be initiated although the adjacent lane is not free.

▶ Before changing lanes, make sure that the neighbouring lane is free and there is no danger to other road users.

▶ Monitor the lane change.

⚠ WARNING Risk of accident if Lane Change Assist unexpectedly stops functioning

If the system limitations for Lane Change Assist have been reached, there is no guarantee that the system will remain active.

Lane Change Assist cannot then assist you by applying steering torques.

▶ Always monitor the lane change and keep your hands on the steering wheel. Observe the traffic conditions and steer and/or brake if necessary.

System limits

The system limitations of Active Steering Assist apply to Active Lane Change Assist (→ page 224).

The system may also be impaired or may not function in the following situations:

- The sensors in the rear bumper are dirty, damaged or covered by a sticker or ice and snow, for example.
- The exterior lighting shows a defect.

ⓘ The Active Lane Change Assist sensors adjust automatically while a certain distance is being driven after the vehicle has been delivered. Active Lane Change Assist is unavailable or only partially available during this teach-in process; no arrow appears next to the Active Steering Assist symbol when the turn signal indicator is activated.

Activating/deactivating Active Lane Change Assist

Multimedia system:

→ ⌂ ▸▸ Settings ▸▸ Assistance ▸▸ Active Lane Change Assist

▶ Activate or deactivate the function.

Function of Active Emergency Stop Assist



If the system detects that the driver has not steered the vehicle for a considerable period of time or has removed their hands from the steering wheel, display ① appears in the multifunction display. If the driver still does not steer the vehicle, or gives no confirmation to the system, a warning tone sounds in addition to the visual warning message.

If the driver still does not respond to the warning, the Beginning emergency stop message appears in the multifunction display. If the driver still does not respond, Active Distance Assist DISTRONIC reduces the speed. The vehicle is decelerated in stages to a standstill.

Depending on the country, at speeds below 60 km/h the hazard warning lights switch on automatically.

When the vehicle is stationary, the following actions are carried out:

- The vehicle is secured with the electric parking brake.
- Active Distance Assist DISTRONIC is ended
- The vehicle is unlocked.

- If possible, an emergency call is placed to the Mercedes-Benz emergency call centre

The driver can cancel the deceleration at any time by performing one of the following actions:

- Steering
- Braking or accelerating
- Deactivating Active Distance Assist DISTRONIC

Function of Hill Start Assist

Hill Start Assist holds the vehicle for a short time when pulling away on a hill under the following conditions:

- **Vehicles with automatic transmission:** the transmission is in position D or R.
- The electric parking brake is released.

This gives you enough time to move your foot from the brake pedal to the accelerator pedal and depress it before the vehicle begins to roll away.

⚠ WARNING Risk of accident and injury due to the vehicle rolling away

After a short time, Hill Start Assist no longer holds the vehicle.

▶ Swiftly move your foot from the brake pedal to the accelerator pedal. Do not leave the vehicle when it is being held by Hill Start Assist.

HOLD function

HOLD function

The HOLD function holds the vehicle at a standstill without requiring you to depress the brake pedal, e.g. while waiting in traffic.

The HOLD function is only an aid. The responsibility for the vehicle safely standing still remains with the driver.

System limits

The HOLD function is only intended to provide assistance when driving and is not a sufficient means of safeguarding the vehicle against rolling away when stationary.

- The incline must not be greater than 30%.

Activating/deactivating the HOLD function

⚠ WARNING Risk of an accident due to the HOLD function being activated when you leave the vehicle

If the vehicle is only braked with the HOLD function it could, in the following situations, roll away:

- If there is a malfunction in the system or in the power supply.
- If the HOLD function is deactivated by depressing the accelerator pedal or brake pedal, e.g. by a vehicle occupant.

▶ Always secure the vehicle against rolling away before you leave it.

Requirements:

- The vehicle is stationary.
- The driver's door is closed or the seat belt on the driver's side is fastened.

- The engine is running or has been automatically switched off by the ECO start/stop function.
- The electric parking brake is released.
- Active Distance Assist DISTRONIC is deactivated.
- **Vehicles with automatic transmission:** the transmission is in position D, R or N.

Activating the HOLD function

▶ Depress the brake pedal and after a short time quickly depress further until the HOLD display appears in the multifunction display.

▶ Release the brake pedal.

Deactivating the HOLD function

▶ Depress the accelerator pedal to pull away.

or

▶ Depress the brake pedal until the HOLD display disappears from the multifunction display.

The HOLD function is deactivated in the following situations:

- Active Distance Assist DISTRONIC is activated.
- **Vehicles with automatic transmission:** the transmission is switched to position P.
- The vehicle is secured with the electric parking brake.

In the following situations, the vehicle is held by transmission position P and/or by the electric parking brake:

- The seat belt is unfastened and the driver's door is opened.
- The vehicle is switched off.
- There is a malfunction in the system or the power supply is insufficient.

Vehicles with manual transmission:
The Brake immediately message may also appear in the multifunction display:

▶ Immediately depress the brake pedal firmly until the warning message disappears. The HOLD function is deactivated.

A horn sounds at regular intervals if, despite the Brake immediately message, you turn off the engine, remove your seat belt and open the driver's door. If you attempt to lock the vehicle, the horn tone becomes louder. The vehicle cannot be locked until you have deactivated the HOLD function.

ⓘ Once you have switched off the engine, you cannot restart the engine until you have deactivated the HOLD function.

Start-off assist

Function of the start-off assist

The start-off assist enables optimal vehicle acceleration from a standstill. For this, a suitably high-grip road surface is required, the tyres and vehicle must also be in good condition.

Do not activate the start-off assist on public roads.

Be sure to observe the safety notes and information on ESP® (→ page 205).

Activating the start-off assist

WARNING Risk of skidding and having an accident from wheels spinning

When you use start-off assist, individual wheels could spin and you could lose control of the vehicle.

If ESP® is deactivated, there is a risk of skidding and accident!

- Make sure that no persons or obstacles are in the close vicinity of your vehicle.

- Deactivating ESP® (→ page 206).
- Move the steering wheel to the straight-ahead position.
- Depress the brake pedal firmly with your left foot and keep it depressed.
- Engage the D drive position (→ page 186).
- Select the sportiest available drive program S+ or S (→ page 180).
- Rapidly depress the accelerator pedal fully.
- Take your foot off the brake, but keep the accelerator pedal depressed.
  The vehicle pulls away at maximum acceleration.
- Switch on ESP® once the acceleration procedure is complete. ESP® will otherwise not be able to stabilise the vehicle if the vehicle starts to skid or a wheel starts to spin.

Cancelling the start-off assist

- Remove your foot from the accelerator pedal.
- Reactivate the ESP®.

Function of adaptive damping adjustment

Suspension with adaptive damping adjustment continuously adjusts the characteristics of the suspension dampers to the current operating and driving conditions.

The damping is set individually for each wheel and is affected by the following factors:

- the road surface conditions
- vehicle load
- the drive program selected
- the driving style

The drive program can be adjusted using the DYNAMIC SELECT switch.

Parking Assist PARKTRONIC

Function of Parking Assist PARKTRONIC

Parking Assist PARKTRONIC is an electronic parking assistance system with ultrasound. It monitors the area around your vehicle using multiple sensors on the front bumper and on the rear bumper. Parking Assist PARKTRONIC shows you the distance between your vehicle and a detected obstacle visually and audibly.

Parking Assist PARKTRONIC is only an aid. It is not a substitute for your attention to the surroundings. The responsibility for safe manoeuvring and parking remains with you. Make sure that there are no persons, animals or objects in the manoeuvring area while manoeuvring and parking in/exiting parking spaces.

In the standard setting, an intermittent warning tone sounds from a distance of approximately 0.3 m to an obstacle in front and approximately

1.0 m to an obstacle behind. A continuous warning tone sounds from a distance of approximately 0.2 m. Using the Warn early all-round setting in the multimedia system, the warning tones for front and side impact protection can be set to sound at a greater distance of approximately 1.0 m in front and 0.6 m on the sides (→ page 235).

ⓘ The Warn early all-round setting is always active in the rear of the vehicle.

If Parking Assist PARKTRONIC is deactivated, Active Parking Assist is unavailable.

Parking Assist PARKTRONIC display in the multimedia system



Vehicles with Active Parking Assist without a 360° Camera



Vehicles with Active Parking Assist and a 360° Camera

If Active Parking Assist is deactivated and an obstacle is detected in the path of the vehicle, a pop-up window for Parking Assist PARKTRONIC ① appears in the multimedia system at speeds below 10 km/h.

The colour of the individual segments of the warning display is based on the distance to the detected obstacle:

- **Yellow segments:** obstacles at a distance between approx. 0.6 m and 1.0 m

- **Orange segments:** obstacles at a distance between approx. 0.3 m and 0.6 m
- **Red segments:** obstacles at a very short distance of approx. 0.3 m or less

Display of Parking Assist PARKTRONIC in the head-up display

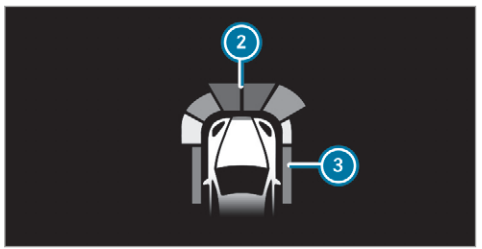

Optionally, obstacles detected by Parking Assist PARKTRONIC from a distance of approximately 1.0 m in front (2) and 0.6 m on the sides (3) can also be displayed in the head-up display.

System limits

Parking Assist PARKTRONIC does not necessarily take into account the following obstacles:

- Obstacles below the detection range, e.g. persons, animals or objects.
- Obstacles above the detection range, e.g. overhanging loads, overhangs or loading ramps of lorries.

The sensors must be free of dirt, ice and slush. Otherwise, they may not function correctly. Clean the sensors regularly, especially after driving off-road, taking care not to scratch or damage them.

Vehicles with trailer hitch: Parking Assist PARKTRONIC is deactivated for the rear zone when you establish an electrical connection between your vehicle and a trailer.

Problems with Parking Assist PARKTRONIC

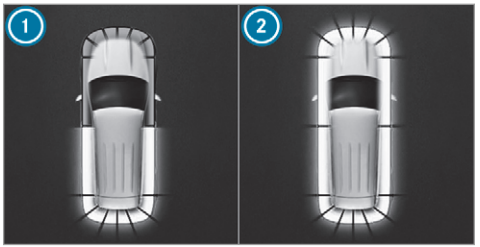

Example: vehicles with 360° Camera

When rear segments (1) or all-round segments (2) light up red and the P symbol appears in the multifunction display, Parking Assist PARKTRONIC may have been deactivated due to signal interference. Start the vehicle again and check if Parking Assist PARKTRONIC is working at a different location.

If a warning tone also sounds for approximately two seconds every time the vehicle is started, it may be due to one of the following causes:

- **The sensors are dirty:** clean the sensors and observe the notes on care of vehicle parts (⟶ page 325).
- **Parking Assist PARKTRONIC has been deactivated due to a malfunction:** restart the vehicle. If the problem persists, consult a qualified specialist workshop.

Function of the passive side impact protection

Passive side impact protection is an additional Parking Assist PARKTRONIC function which warns the driver about obstacles at the side of the vehicle. A warning is issued when obstacles are detected between the front and rear detection range. In order for an object on the side to be detected, the sensors in the front and rear bumper must first detect the object while you are driving past it.

During the parking procedure or manoeuvring, objects are detected as the vehicle drives past. If you steer in the direction of a detected obstacle and there is a risk of a lateral collision, a warning is issued and the segments light up in colour in the display.

The segment colour changes depending on the distance to the detected obstacle:

- **Yellow:** approximately 30 - 60 cm
- **Red:** less than approximately 30 cm

In order for lateral front or rear segments to be displayed, the vehicle must first travel a distance of at least half of the vehicle length. Once the vehicle has travelled the length of the vehicle, all of the lateral front and rear segments can be displayed.

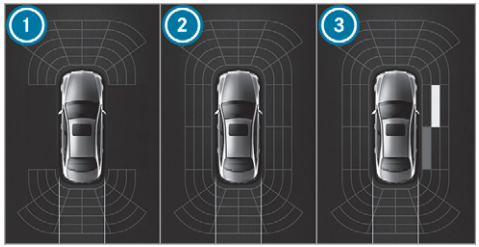

Parking Assist PARKTRONIC display: vehicles without a 360° Camera

1. Operational front and rear
2. Operational front, rear and sides
3. Obstacle detected at the front right (yellow) and rear (red)

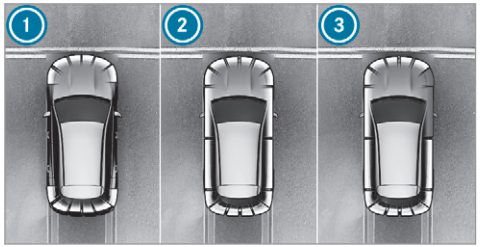

Parking Assist PARKTRONIC display: vehicles with a 360° Camera

① Operational front and rear
② Operational front, rear and sides
③ Obstacles detected at the front right (red)

Saved obstacles on the sides are deleted in the following situations, for example:

- You park the vehicle and switch off the ignition.
- You open the doors.

After the engine is restarted, obstacles on the sides must be detected again before a new warning can be issued.

System limits

The system limits for Parking Assist PARKTRONIC apply to passive side impact protection.

The following objects are not detected, for example:

- Pedestrians who approach the vehicle from the side
- Objects placed next to the vehicle

Activating/deactivating Parking Assist PARKTRONIC

! **NOTE** Risk of an accident from objects at close range

Parking Assist PARKTRONIC may not detect certain objects at close range.

▶ When parking or manoeuvring the vehicle, pay particular attention to any objects which are above or below the sensors, e.g. flowerpots or drawbars. The vehicle or other objects could otherwise be damaged.

Requirements:

- The camera menu is open.
- Or: Active Parking Assist is active.
- Or: the PARKTRONIC pop-up window appears.

ⓘ Make sure that there are no persons, animals or objects in the manoeuvring area while manoeuvring and parking in/exiting parking spaces.

▶ Tap P OFF in the media display.

ⓘ If the P OFF symbol is shown in the multifunction display, Parking Assist PARKTRONIC is not active. Parking Assist PARKTRONIC is automatically activated when the vehicle is started.

Alternatively, Parking Assist PARKTRONIC can be activated or deactivated in the quick access menu.

Adjusting the warning tones of Parking Assist PARKTRONIC
Multimedia system:
↴ ⌂ » Settings » Assistance » Camera & parking

Adjusting the volume of the warning tones

- Select Warning tone volume.
- Set a value.

Adjusting the pitch of the warning tones

- Select Warning tone pitch.
- Set a value.

Specifying the starting point for the warning tones
You can specify whether the Parking Assist PARKTRONIC warning tones should commence when the vehicle is further away from an obstacle.

- Select Warn early all-round.
- Activate or deactivate the function.

Activating/deactivating audio fadeout
You can specify whether the volume of a media source in the multimedia system is to be reduced when Parking Assist PARKTRONIC sounds a warning tone.

- Select Audio fadeout during warning tones.
- Activate or deactivate the function.

Reversing camera

Function of the reversing camera
If you have activated the function in the multimedia system (⟶ page 241), the image from the reversing camera is shown in the media display when the reverse gear is engaged. Dynamic guide lines show the path the vehicle will take with the current steering angle. This helps you to orient yourself and to avoid obstacles when reversing.

The reversing camera is only an aid. It is not a substitute for your attention to the surroundings. The responsibility for safe manoeuvring and parking remains with you. Make sure that there are no persons, animals or objects etc., in the manoeuvring area while manoeuvring and parking.

ⓘ You can open the cover of the reversing camera manually (⟶ page 241).

The guide lines in the media display show the distances to your vehicle. The distances displayed only apply to road level.

Depending on the vehicle equipment, you can select from the following views:

- Normal view
- Wide-angle view
- Trailer view

The area behind the vehicle is displayed as a mirror image, as in the inside rearview mirror.

Vehicles without Active Parking Assist
The following camera views are available in the multimedia system:

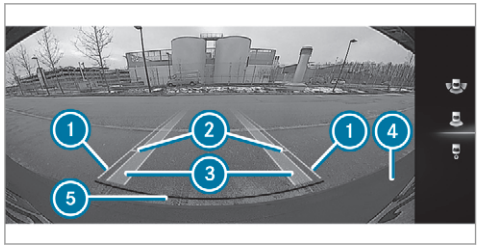

Normal view

1. Yellow guide line, vehicle width (driven surface) depending on the current steering angle (dynamic)
2. Yellow guide line at a distance of approximately 1.0 m from the rear area
3. Yellow lanes marking the course the tyres will take with the current steering angle (dynamic)
4. Bumper
5. Red guide line at a distance of approximately 0.3 m from the rear area



Wide-angle view

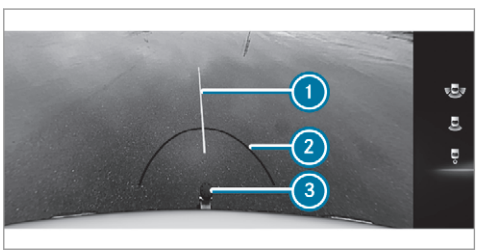

Trailer view (vehicles with a trailer hitch)

1. Yellow guide line, locating aid
2. Red guide line at a distance of approximately 0.3 m from the ball head of the trailer hitch
3. Ball head of the trailer hitch

Vehicles with Active Parking Assist

The following camera views are available in the multimedia system:

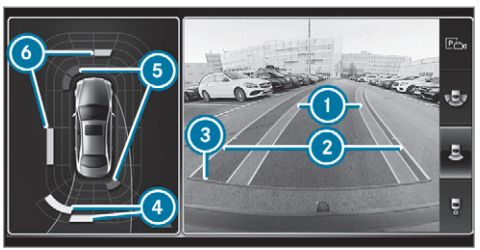

Normal view

1. Yellow lanes marking the course the tyres will take with the current steering angle (dynamic)
2. Yellow guide line, vehicle width (driven surface) depending on the current steering angle (dynamic)

3. Red guide line at a distance of approximately 0.3 m from the rear area
4. Yellow warning indicator of Parking Assist PARKTRONIC: obstacles at a distance between approximately 0.6 m and 1.0 m
5. Red warning display of Parking Assist PARKTRONIC: obstacles are very close (approximately 0.3 m or less)
6. Orange warning display of Parking Assist PARKTRONIC: obstacles are a medium distance away (between approximately 0.3 m and 0.6 m)



Wide-angle view

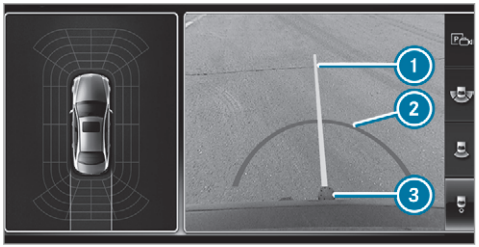

Trailer view (vehicles with a trailer hitch)

1. Yellow guide line, locating aid
2. Red guide line at a distance of approximately 0.3 m from the ball head of the trailer hitch
3. Ball head of the trailer hitch

System failure

If the reversing camera is not operational, the following display appears in the multimedia system.



System limits

The reversing camera will not function or will only partially function in the following situations:

- The tailgate is open.
- There is heavy rain, snow or fog.
- The light conditions are poor, e.g. at night.
- Cameras, or vehicle components in which the cameras are fitted, are damaged, dirty or covered. Observe the information on vehicle sensors and cameras (→ page 203).

ⓘ Do not use the reversing camera in these types of situation. You could otherwise injure others or collide with objects when parking the vehicle.

ⓘ The contrast of the display may be impaired by direct sunlight or by other light sources, e.g. when driving out of a garage. In this case, pay particular attention.

ⓘ Have the display repaired or replaced if, for example, pixel errors considerably restrict its use.

360° Camera

Function of the 360° Camera

The 360° Camera is a system that consists of four cameras. The cameras cover the immediate vehicle surroundings. The system assists you, e.g. when parking or at exits with reduced visibility.

The views of the 360° Camera are always available when driving forwards up to a speed of approx. 16 km/h and when reversing.

The 360° Camera is only an aid and may show a distorted view of obstacles, show them incorrectly or not show them at all. It is not a substitute for your attention to the surroundings. The responsibility for safe manoeuvring and parking remains with you. Make sure that there are no persons, animals or objects etc., in the manoeuvring area while manoeuvring and parking.

The system evaluates images from the following cameras:

- Reversing camera
- Front camera
- Two side cameras in the outside mirrors

ⓘ You can open the cover of the reversing camera manually (→ page 241).

Views of the 360° Camera

You can select from different views:

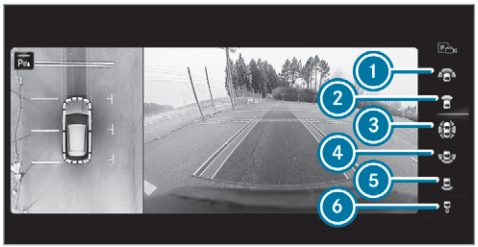

1. Wide-angle view, front
2. Top view with image from the front camera
3. Top view with images from the side cameras in the outside mirrors
4. Wide-angle view, rear
5. Top view with image from the reversing camera
6. Top view with trailer view (vehicles with a trailer hitch)

Top view



1. Lane indicating the route the vehicle will take at the current steering wheel angle
2. Warning display of Parking Assist PARKTRONIC
3. Your vehicle from above

The colour of the individual segments of warning display 2 is based on the distance to the detected obstacle:

- **Yellow segments:** obstacles at a distance between approx. 0.6 m and 1.0 m
- **Orange segments:** obstacles at a distance between approx. 0.3 m and 0.6 m

- **Red segments:** obstacles at a very short distance of approx. 0.3 m or less

When Parking Assist PARKTRONIC is operational and no object is detected, the segments of the warning display are shown in grey.

Guide lines

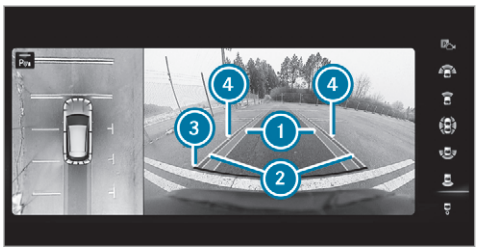

1. Yellow lane marking the course the tyres will take at the current steering wheel angle (dynamic)
2. Yellow guide line, vehicle width (driven surface) depending on the current steering wheel angle (dynamic)
3. Red guide line at a distance of approximately 0.3 m from the rear area
4. Mark at a distance of approx. 1.0 m

ⓘ When Active Parking Assist is active, lane markings ① are displayed in green.
The guide lines in the media display show the distances to your vehicle. The distances apply to road level.
In trailer mode, the guide lines are shown at the level of the trailer hitch.

Trailer view (vehicles with a trailer hitch)

If you select trailer view and no trailer is coupled to the vehicle, the following display appears:

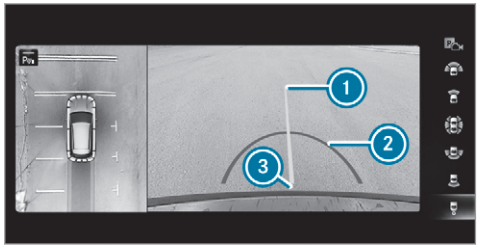

1. Yellow guide line, locating aid
2. Red guide line at a distance of approximately 0.3 m from the ball head of the trailer hitch
3. Ball head of the trailer hitch



When the electrical connection is established between the vehicle and the trailer, the display changes to the side camera view.

This view supports manoeuvring procedures with a trailer.

Side view of the mirror cameras

The sides of the vehicle can be seen in this view.

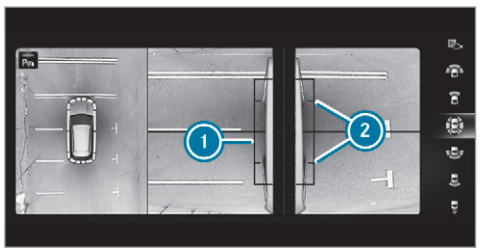

1. Guide line of external vehicle dimensions with outside mirrors folded out
2. Marker of the wheel contact points

System failure

If the system is not ready for operation, the following message appears in the media display:



System limits

The 360° Camera will not function or will only partially function in the following situations:

- The doors are open.
- The outside mirrors are folded in.
- The tailgate is open.
- There is heavy rain, snow or fog.
- The light conditions are poor, e.g. at night.
- Cameras, or vehicle components in which the cameras are fitted, are damaged, dirty or covered. Observe the information on vehicle sensors and cameras (→ page 203).

ⓘ Do not use the 360° Camera under such circumstances. You could otherwise injure others or collide with objects when parking the vehicle.

For technical reasons, the standard height of the vehicle may be altered if the vehicle is carrying a heavy load and can result in inaccuracies in the guide lines and in the display of the generated images.

ⓘ The contrast of the display may be impaired by abrupt, direct sunlight or by other light sources, e.g. when driving out of a garage. In this case, pay particular attention.

ⓘ Have the display repaired or replaced if, for example, pixel errors considerably restrict its use.

See the notes on cleaning the 360° Camera (→ page 325).

Selecting a view for the 360° Camera

Requirements:

- The Auto reversing camera function is activated in the multimedia system (→ page 241).

▶ Shift to reverse gear.

▶ Select the desired view in the multimedia system (→ page 238).

▶ If, after shifting to reverse gear, the image of the reversing camera is not shown: switch off the ignition, press and hold the  button,

switch on the ignition and engage reverse gear again.

Switching reversing camera automatic mode on/off

The reversing camera is only an aid. It is not a substitute for your attention to the surroundings. The responsibility for safe manoeuvring and parking remains with you. Make sure that no persons, animals or objects etc. are in the manoeuvring range. Pay attention to your surroundings and be ready to brake at all times.

Multimedia system:

→ ⌂ » Settings » Assistance » Camera & parking

▶ Switch Auto reversing camera on or off.

Opening the camera cover of the reversing camera

Multimedia system:

→ ⌂ » Settings » Assistance » Camera & parking

▶ Select Open camera cover.

ⓘ The camera cover closes automatically after some time or after an ignition cycle.

Active Parking Assist

Function of Active Parking Assist

Active Parking Assist is an electronic parking assistance system that automatically searches for and measures parking spaces on both sides of the vehicle when travelling forwards up to approx. 35 km/h.

Vehicles with automatic transmission: Active Parking Assist provides assistance when changing gear, accelerating, braking and steering the vehicle.

Vehicles with manual transmission: the active brake application and automatic gear change are only available on vehicles with automatic transmission. You must therefore brake the vehicle and change gear yourself when parking or exiting a parking space.

If all requirements are met, the P display appears in the multifunction display. The system then independently locates and measures parallel and perpendicular parking spaces on both sides of the vehicle.

When Active Parking Assist has detected parking spaces, the P display appears in the multifunction display. The arrows show on which side of the road detected parking spaces are located. They are then shown in the media display. The parking space and, if necessary, the parking direction can be selected as desired. Active Parking Assist calculates a suitable vehicle path, switches on the turn signal indicator and assists you in parking and exiting the parking space.

Active Parking Assist is only an aid. It is not a substitute for your attention to the surroundings. The responsibility for safe manoeuvring and parking remains with you. Make sure that no persons, animals or objects etc. are in the manoeuvring range.

If one of the following actions is carried out, Active Parking Assist is cancelled:

- Parking Assist PARKTRONIC is deactivated.
- You begin steering.
- You apply the parking brake.

- **Vehicles with automatic transmission:** you engage transmission position P.
- ESP® intervenes.
- You open the doors or the tailgate while driving.

System limits

Objects located above or below the detection range of the sensors, e.g. overhanging loads, tail sections or loading ramps of goods vehicles, or the borders of parking spaces, are not detected during measurement of the parking space. These are also then not taken into account when calculating the parking procedure. In some circumstances, Active Parking Assist may therefore guide you into the parking space incorrectly.

WARNING Risk of accident due to objects located above or below the detection range of Active Parking Assist

If there are objects above or below the detection range, the following situations may arise:

- Active Parking Assist may steer too early.
- The vehicle may not stop in front of these objects.

This could cause a collision.

▶ In these situations, do not use Active Parking Assist.

Extreme environmental conditions, such as snowfall or heavy rain, may lead to a parking space being measured inaccurately. Parking spaces that are partially occupied by trailer drawbars might not be identified as such or be measured incorrectly. Only use Active Parking Assist on level, high-grip ground.

Do not use Active Parking Assist in the following situations:

- In extreme weather conditions such as ice, packed snow or in heavy rain.
- When transporting a load that protrudes beyond the vehicle.
- If the parking space is on a steep downhill or uphill gradient.
- When snow chains are fitted.
- When a trailer or bicycle rack is attached.
- Directly after a tyre change or when spare tyres are fitted.
- If the tyre pressure is too low or too high.
- If the suspension is out of alignment, e.g. after bottoming out on a kerb.
- On steep inclines of more than approx. 15%.

Active Parking Assist may also display parking spaces that are not suitable for parking, such as, e.g.:

- Parking spaces where parking is prohibited.
- Parking spaces on unsuitable surfaces.

Parking with Active Parking Assist

ⓘ Depending on the vehicle's equipment, the button may also be located at a different position in the centre console.

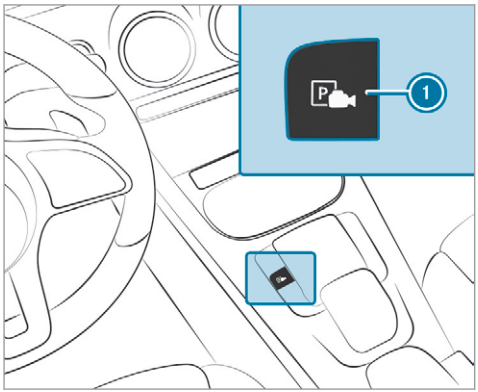

▶ Press button 1.

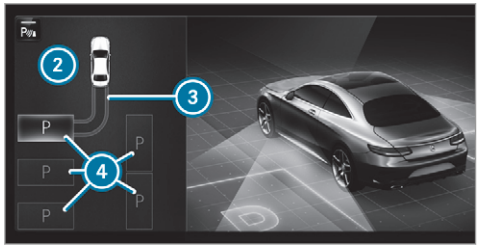

The media display shows the view of Active Parking Assist. Area 2 displays detected parking spaces 4 and vehicle path 3.

ⓘ Vehicle path 3 shown on the media display may differ from the actual vehicle path.

▶ If a parking space is displayed: stop the vehicle.

▶ Select desired parking space 4 and confirm.

▶ If necessary, select the parking direction: forwards or reverse, and confirm.
Vehicle path 3 is shown, depending on selected parking space 4 and the parking direction.

ⓘ The turn signal indicator is switched on automatically when the parking procedure begins.

You are responsible for selecting the turn signal indicator in accordance with the traffic conditions. If necessary, select the turn signal indicator accordingly.

⚠ WARNING Risk of accident due to vehicle swinging out while parking or pulling out of a parking space

While parking or exiting a parking space, the vehicle swings out and can drive onto areas of the oncoming lane.

This could cause you to collide with objects or other road users.

▶ Pay attention to objects and other road users.

▶ Where necessary, stop the vehicle or cancel the parking procedure with Active Parking Assist.

▶ If, for example, the Please engage reverse gear message appears in the media display:

select the corresponding transmission position.
Vehicles with automatic transmission: the vehicle drives into the selected parking space.

ⓘ During the parking procedure with Active Parking Assist, the lane markings are displayed in green in the camera image.

▶ **Vehicles with manual transmission:** stop as soon as Parking Assist PARKTRONIC sounds the continuous warning tone, if not before. Depending on the message or as required, engage forward or reverse gear.

On completion of the parking procedure, the Parking Assist finished, take control of vehicle display message appears. Further manoeuvring may still be necessary.

▶ After completion of the parking procedure, safeguard the vehicle against rolling away. When required by legal requirements or local conditions: turn the wheels towards the kerb.

ⓘ You can stop the vehicle and change the transmission position during the parking procedure. The system then calculates a new vehicle path. If no new vehicle path is available, the system can change the transmission position again or cancel the parking procedure.

Exiting a parking space with Active Parking Assist
Requirements:

- The vehicle has been parked with Active Parking Assist.

Please note that you are responsible for the vehicle and surroundings during the entire parking procedure.

▶ Start the vehicle.

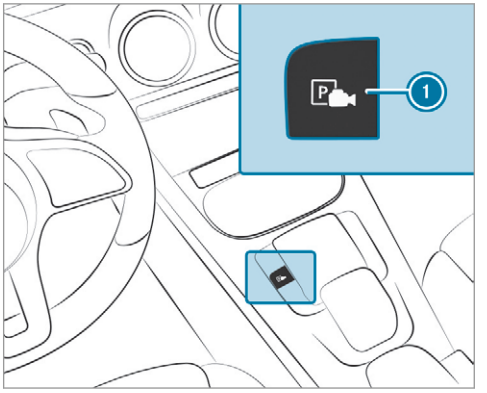

▶ Press button 1.
The media display shows the view of Active Parking Assist.

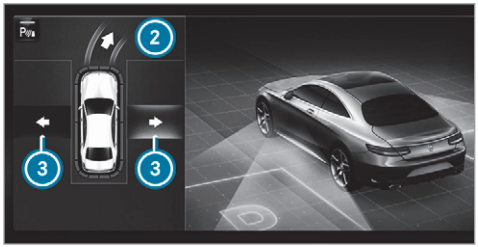

▶ If the vehicle has been parked perpendicular to the direction of travel: in area 2, select direction of travel 3 Left or Right.

ⓘ The vehicle path shown on the media display may differ from the actual vehicle path.

▶ Confirm direction of exit 3 to drive out of the parking space.

ⓘ The turn signal indicator is switched on automatically when the exiting procedure begins.

You are responsible for selecting the turn signal indicator in accordance with the traffic conditions. If necessary, select the turn signal indicator accordingly.

⚠ WARNING Risk of accident due to vehicle swinging out while parking or pulling out of a parking space

While parking or exiting a parking space, the vehicle swings out and can drive onto areas of the oncoming lane.

This could cause you to collide with objects or other road users.

▶ Pay attention to objects and other road users.

▶ Where necessary, stop the vehicle or cancel the parking procedure with Active Parking Assist.

▶ If, for example, the Please engage forward gear message appears in the media display: select the corresponding transmission position.
The vehicle moves out of the parking space. The turn signal indicator is switched off automatically.

After the parking space has been exited, a warning tone and the Parking Assist finished, take control of vehicle message prompt you to take control of the vehicle.

The vehicle is not automatically braked and can roll away. You have to accelerate, brake, steer and change gear yourself again.

Function of Drive Away Assist

ⓘ Drive Away Assist is only available for vehicles with automatic transmission.

Drive Away Assist can reduce the severity of an impact when pulling away. If an obstacle is detected in the direction of travel, the vehicle's speed is briefly reduced to approx. 2 km/h. If a critical situation is detected, the symbol appears in the media display.

ⓘ You can cancel an intervention by Drive Away Assist at any time by pressing the button.

⚠ WARNING Risk of accident caused by limited detection performance of Drive Away Assist

Drive Away Assist cannot always clearly identify objects and traffic situations.

- ▶ Always pay careful attention to the traffic situation; do not rely on Drive Away Assist alone.
- ▶ Be prepared to brake or swerve as necessary, provided the traffic situation permits and that it is safe to take evasive action.

Drive Away Assist is only an aid. It is not a substitute for your attention to the surroundings. The responsibility for safe manoeuvring and parking remains with you. Make sure that no persons, animals or objects etc. are in the manoeuvring range.

A risk of a collision may arise in the following situations, for example:

- If the driver mixes up the accelerator and brake pedals.
- If an incorrect transmission position is engaged.

Drive Away Assist is active under the following conditions:

- If Parking Assist PARKTRONIC is activated.
- If you shift the transmission position to R or D when the vehicle is stationary.
- If the detected obstacle is less than approx. 1.0 m away.
- If the manoeuvring assistant function is activated in the multimedia system.

System limits

The performance of Drive Away Assist is limited on inclines.

When driving with a trailer, Drive Away Assist is not available.

ⓘ Also observe the system limits of Parking Assist PARKTRONIC (→ page 230).

Function of Cross Traffic Alert

ⓘ Also observe the instructions on Blind Spot Assist and Active Blind Spot Assist (→ page 252).

Vehicles with Blind Spot Assist or Active Blind Spot Assist: Cross Traffic Alert can warn drivers of any crossing traffic when reversing and manoeuvring out of a parking space. The radar sensors in the bumper also monitor the area adjacent to the vehicle. If a critical situation is detected, the symbol appears in the media display. If the driver does not respond to the warning, the vehicle's brakes can be applied automatically.

If the radar sensors are obstructed by vehicles or other objects, detection is not possible.

Cross Traffic Alert is active under the following conditions:

- if the vehicle is reversing at walking pace.
- if the manoeuvring assistant function is activated in the multimedia system.

System limits

Cross Traffic Alert is not available on inclines.

Cross Traffic Alert is not available when driving with a trailer.

Activating/deactivating manoeuvring assistance

Multimedia system:

→ ⌂ ▸▸ Settings ▸▸ Assistance ▸▸ Camera & parking

▶ Activate/deactivate Manoeuvring assistance.

ⓘ Manoeuvring assistance must be active for the function of Drive Away Assist (→ page 245) and Cross Traffic Alert (→ page 246).

ATTENTION ASSIST

Function of ATTENTION ASSIST

ATTENTION ASSIST assists you on long, monotonous journeys, e.g. on motorways and trunk roads. If ATTENTION ASSIST detects indicators of fatigue or increasing lapses in concentration on the part of the driver, it suggests taking a break.

ATTENTION ASSIST is only an aid. It cannot always detect fatigue or lapses in concentration in time. The system is not a substitute for a well-rested and attentive driver. On long journeys, take regular breaks in good time that allow for adequate recuperation.

You can choose between two settings:

- **Standard:** normal system sensitivity.
- **Sensitive:** higher system sensitivity. The driver is warned earlier and the attention level detected by ATTENTION ASSIST is adapted accordingly.

If drowsiness or increasing lapses in concentration are detected, the ATTENTION ASSIST: Take a break! warning appears in the Instrument Display. You can acknowledge the message and take a break where necessary. If you do not take a break and ATTENTION ASSIST continues to detect increasing lapses in concentration, you will be warned again after a minimum of 15 minutes.

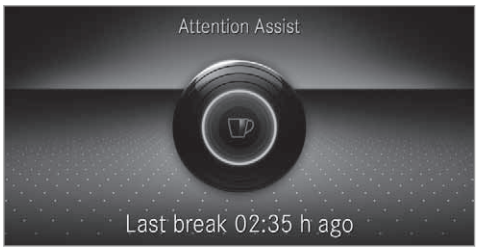

You can have the following status information for ATTENTION ASSIST displayed in the assistance menu of the on-board computer:

- The length of the journey since the last break.
- The attention level determined by ATTENTION ASSIST:
  - the fuller the circle, the higher the attentional level determined
  - as your attention wanes, the circle in the centre of the display becomes smaller

If ATTENTION ASSIST is unable to calculate the attention level and cannot issue a warning, the System suspended message appears.

If a warning is given in the Instrument Display, the multimedia system offers to search for a rest area. You can select a rest area and start navigation to this rest area. This function can be activated and deactivated in the multimedia system.

If ATTENTION ASSIST is deactivated, the symbol appears in the assistance graphic in the Instrument Display when the engine is running. ATTENTION ASSIST is activated automatically

when the engine is re-started. The last selected sensitivity level remains stored.

System limits

ATTENTION ASSIST is active in the 60 km/h to 200 km/h speed range.

The functionality of ATTENTION ASSIST is restricted, and warnings may be delayed or not occur at all in the following situations:

- If you have been driving for less than approximately 30 minutes.
- If the road condition is poor (uneven road surface or potholes).
- If there is a strong side wind.
- If you adopt a sporty driving style (high cornering speeds or high rates of acceleration).
- If the Steering Assist function of Active Distance Assist DISTRONIC is active.
- If the time has been set incorrectly.
- If you change lanes and vary your speed frequently In active driving situations.

The ATTENTION ASSIST tiredness or alertness assessment is deleted and restarted when continuing the journey in the following situations:

- If you switch off the engine.
- If you unfasten your seat belt and open the driver's door (e.g. changing drivers or taking a break).

Setting ATTENTION ASSIST

Multimedia system:

→ ⌂ » Settings » Assistance » Attention Assist

Setting options

▶ Select Standard, Sensitive or Off.

Suggesting a rest area

▶ Select Suggest rest area.

▶ Activate or deactivate the function.
If ATTENTION ASSIST detects fatigue or increasing lack of attention, it suggests a rest area in the vicinity.

▶ Select the suggested rest area.
You are guided to the selected rest area.

Speed Limit Assist

Function of Speed Limit Assist

Speed Limit Assist detects speed limits with multifunction camera and displays them in the instrument cluster and optionally in the head-up display. The camera also detects speed limits with a restriction indicated by an additional sign (e.g. when wet). The system detects stop signs, thereby preventing the engine from being switched off by the ECO start/stop function.

Observe the notes on driving systems and your responsibility; you may otherwise fail to recognise dangers (→ page 202).

Warning when the maximum permissible speed is exceeded

The system can warn you if you unintentionally exceed the maximum permissible speed. To do this, you can specify in the multimedia system by how much the maximum permissible speed can be exceeded before a warning is issued. You can specify whether the warning is to be just a visual warning or an acoustic one as well.

Display in the Instrument Display

ⓘ The illustrations show the Instrument Display in the widescreen cockpit.

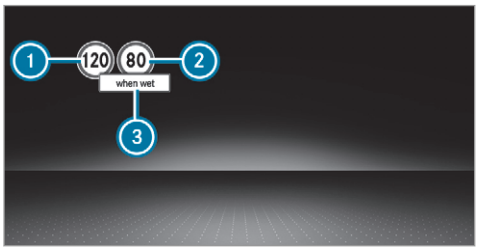

1. Permissible speed
2. Permissible speed when there is a restriction
3. Additional sign with restriction

Speed Limit Assist is not available in all countries. If it is unavailable, the following display is shown in the speedometer:



System limits

The system may be impaired or may not function in the following situations:

- If there is poor visibility, e.g. due to insufficient illumination of the road, if there are highly variable shade conditions or in rain, snow, fog or heavy spray.
- If there is glare, e.g. from oncoming traffic, direct sunlight or reflections.
- If the windscreen in the area of the multifunction camera is dirty, or if the camera is misted up, damaged or covered.
- If the traffic signs are hard to detect, e.g. due to dirt or snow, because they are covered, or due to insufficient lighting.
- If you turn sharply, when passing traffic signs outside the camera's field of vision.

Setting Speed Limit Assist

Multimedia system:

→ ⌂ ▸▸ Settings ▸▸ Assistance ▸▸ Speed Limit Assist

Adjusting the type of warning

▶ Select Visual & audible, Visual or None.

Adjusting the warning threshold

This value determines the speed at which a warning is issued when exceeded.

▶ Select Warning threshold.

▶ Set the desired speed.

ⓘ If one of the following systems is activated, the speed detected can be manually adopted as the speed limit:

- Active Distance Assist DISTRONIC
- Cruise control
- Variable limiter

Further information (→ page 219).

Traffic Sign Assist

Function of Traffic Sign Assist

Traffic Sign Assist detects traffic signs with the multifunction camera (→ page 203). It assists you by displaying detected speed limits and overtaking restrictions in the instrument cluster and optionally in the head-up display or central display.

Observe the notes on driving systems and your responsibility; you may otherwise fail to recognise dangers (→ page 202).

Since Traffic Sign Assist also uses the data stored in the navigation system, it can update the display in the following situations without detecting traffic signs:

- When the vehicle changes roads, e.g. slip road or motorway exit.
- When a village or town boundary which is stored in the digital map is passed.

If the system detects that you are driving onto a section of road in the wrong direction of travel, it triggers a warning.

The camera also detects traffic signs with a restriction indicated by an additional sign (e.g. when wet).

Warning when the maximum permissible speed is exceeded

The system can warn you if you unintentionally exceed the maximum permissible speed. To do this, you can specify in the multimedia system by how much the maximum permissible speed can be exceeded before a warning is issued. You can specify whether the warning is to be just a visual warning or an acoustic one as well.

Display in the Instrument Display

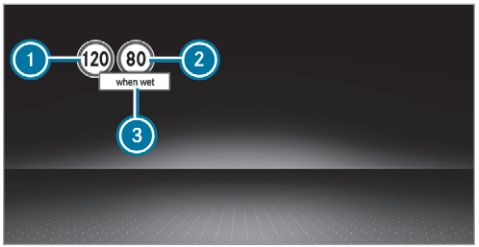

Instrument Display in the widescreen cockpit

1. Permissible speed
2. Permissible speed when there is a restriction
3. Additional sign with restriction

ⓘ **Vehicles with a standard Instrument Display:** a **+** symbol next to a traffic sign in the Instrument Display indicates that additional traffic signs have been detected. These can also be displayed in the media display and optionally in the head-up display.

If Traffic Sign Assist cannot determine the current maximum permissible speed (e.g. due to

missing signs), the following display appears in the Instrument Display:



This is displayed continuously if the vehicle is in a country where Traffic Sign Assist is not supported. Traffic Sign Assist is not available in all countries.

ⓘ Also observe the information on display messages in Traffic Sign Assist (→ page 386).

Warning when approaching pedestrian crossings (vehicles with Driving Assistance Package)

The system can warn you if you approach a pedestrian crossing with your vehicle. The message Watch for pedestrians appears in the instrument cluster.

The warning occurs only if appropriate traffic signs or road markings are detected and pedestrians are present in the danger zone.

System limits

The system may be impaired or may not function in the following situations:

- If there is poor visibility, e.g. due to insufficient illumination of the road, if there are highly variable shade conditions or in rain, snow, fog or heavy spray.
- If there is glare, e.g. from oncoming traffic, direct sunlight or reflections.
- If the windscreen in the area of the multifunction camera is dirty, or if the camera is misted up, damaged or covered.
- If the traffic signs are hard to detect, e.g. due to dirt or snow, because they are covered, or due to insufficient lighting.
- If the information in the navigation system's digital map is incorrect or out-of-date.
- If the signs are ambiguous, e.g. traffic signs on construction sites or in adjacent lanes.
- If you turn sharply, when passing traffic signs outside the camera's field of vision.

Setting Traffic Sign Assist

Requirements:

- **Only vehicles with Driving Assistance Package:**

  Active Distance Assist DISTRONIC must be activated for the automatic adoption of speed limits.

Multimedia system:

→ ⌂ ▸▸ Settings ▸▸ Assistance ▸▸ Traffic Sign Assist

Activating or deactivating automatic adoption of speed limits (only vehicles with Driving Assistance Package)

▶ Select Adopt limit.

▶ Activate or deactivate the function.
The speed limits detected by Traffic Sign Assist are automatically adopted by Active Distance Assist DISTRONIC.

ⓘ If one of the following systems is activated, the detected speed can be manually adopted as the speed limit:

- Active Distance Assist DISTRONIC
- Cruise control
- Variable limiter

Further information (→ page 219).

Displaying detected traffic signs in the media display

- ▶ Select Display in head unit.
- ▶ Activate or deactivate the function.

Adjusting the type of warning

- ▶ Select Visual & audible, Visual or Off.

Adjusting the warning threshold

This value determines the speed at which a warning is issued when exceeded.

- ▶ Select Warning threshold.
- ▶ Set the desired speed.

Blind Spot Assist and Active Blind Spot Assist with exit warning

Function of Blind Spot Assist and Active Blind Spot Assist with exit warning

Blind Spot Assist and Active Blind Spot Assist use two lateral, rear-facing radar sensors to monitor the area up to 40 m behind and 3 m next to your vehicle.

If a vehicle is detected at speeds above approximately 12 km/h and this vehicle subsequently enters the monitoring range directly next to your vehicle, the warning lamp in the outside mirror lights up red.

Permanent status display in the instrument cluster:

-  (grey): system is activated but inoperative
-  (green): system is activated and operational

If a vehicle is detected close to your vehicle and you switch on the turn signal indicator in the corresponding direction, a double warning tone sounds and the red warning lamp in the outside mirror flashes. If the turn signal indicator remains switched on, all other detected vehicles are indicated only by the flashing of the red warning lamp.

If you overtake a vehicle quickly, no warning is given.

⚠ WARNING Risk of accident despite Blind Spot Assist

Blind Spot Assist does not react to vehicles approaching and overtaking you at a greatly different speed.

Blind Spot Assist cannot warn drivers in this situation.

- ▶ Always pay careful attention to the traffic situation and maintain a safe distance at the side of the vehicle.

Observe the notes on driving systems and your responsibility; you may otherwise fail to recognise dangers (→ page 202).

Exit warning

The exit warning is an additional function of Blind Spot Assist and can warn vehicle occupants about approaching vehicles when leaving the vehicle when stationary.

⚠ WARNING Risk of accident despite exit warning

The exit warning neither reacts to stationary objects nor to vehicles approaching you at a greatly differing speed.

The exit warning cannot warn drivers in these situations.

- Always pay particular attention to the traffic situation when opening the doors and make sure there is sufficient clearance.

If there is a vehicle in the monitoring range, this is indicated in the outside mirror. If a vehicle occupant opens the door on the side with the warning, a warning tone sounds and the warning lamp in the outside mirror starts to flash.

This additional function is only available when Blind Spot Assist is active. When the exit warning is activated, it can warn vehicle occupants for up to three minutes after switching the ignition off. The exit warning is no longer available once the warning lamp in the outside mirror flashes three times.

The exit warning is only an aid and not a substitute for the attention of vehicle occupants. The responsibility for opening and closing the doors and for leaving the vehicle remains with the vehicle occupants.

System limits

Blind Spot Assist and Active Blind Spot Assist may be limited in the following situations:

- if there is dirt on the sensors or the sensors are obscured
- in poor visibility, e.g. due to fog, heavy rain or snow
- if there are narrow vehicles, e.g. bicycles or motorbikes
- if the road has very wide or narrow lanes
- if vehicles are not driving in the middle of their lane

Warnings may be issued in error when driving close to crash barriers or similar continuous lane borders. Always make sure that there is sufficient distance to the side for other traffic or obstacles.

Warnings may be interrupted when driving alongside long vehicles, for example lorries, for a prolonged time.

Blind Spot Assist is not operational when reverse gear is engaged.

Blind Spot Assist and the exit warning are not operational when a trailer is coupled to the vehicle and the electrical connection has been correctly established.

The exit warning may be limited in the following situations:

- when the sensors are covered by adjacent vehicles in narrow parking spaces
- when people approach the vehicle
- in the event of stationary or slowly moving objects

Function of brake application (Active Blind Spot Assist)

If Active Blind Spot Assist detects a risk of a side impact in the monitoring range, a course-correcting brake application is carried out. This is designed to help you avoid a collision.

The course-correcting brake application is available in the speed range between approximately 30 km/h and 200 km/h.

WARNING Risk of accident despite brake application of Active Blind Spot Assist

A course-correcting brake application cannot always prevent a collision.

- Always steer, brake or accelerate yourself, especially if Active Blind Spot Assist warns you or makes a course-correcting brake application.
- Always maintain a safe distance at the sides.



If a course-correcting brake application occurs, the red warning lamp flashes in the outside mirror and a warning tone sounds. In addition, a display (1) indicating the danger of a side collision appears in the multifunction display.

In rare cases, the system may make an inappropriate brake application. This brake application may be interrupted at any time if you steer slightly in the opposite direction or accelerate.

System limits

Note the system limitations of Active Blind Spot Assist; you may otherwise not recognise the dangers (→ page 252).

Either a course-correcting brake application appropriate to the driving situation, or none at all, may occur in the following situations:

- Vehicles or obstacles, e.g. crash barriers, are located on both sides of your vehicle.
- A vehicle approaches too closely on the side.
- You have adopted a sporty driving style with high cornering speeds.
- You brake or accelerate significantly.
- A driving safety system intervenes, e.g. ESP®or Active Brake Assist.
- ESP® is deactivated.
- A loss of tyre pressure or a defective tyre is detected.
- You are driving with a trailer and the electrical connection to the trailer hitch has been correctly established.

Activating/deactivating Blind Spot Assist or Active Blind Spot Assist

Multimedia system:

→ ⌂ ▸▸ Settings ▸▸ Assistance

- Activate or deactivate Blind Spot Assist.

or

▶ Activate or deactivate Act. Blind Spot Assist.

Active Lane Keeping Assist

Function of Active Lane Keeping Assist

Active Lane Keeping Assist monitors the area in front of your vehicle by means of the multifunction camera (→ page 203). It serves to protect you against unintentionally leaving your lane. You will be warned by vibration pulses in the steering wheel and guided by a course-correcting brake application back into your lane.

Active Lane Keeping Assist is available in the speed range between 60 km/h and 200 km/h.

Active Lane Keeping Assist can neither reduce the risk of an accident if you fail to adapt your driving style nor override the laws of physics. It cannot take into account road, weather or traffic conditions. Active Lane Keeping Assist is only an aid. You are responsible for maintaining a safe distance to the vehicle in front, for vehicle speed, for braking in good time and for staying in lane.

The status of Active Lane Keeping Assist is displayed in the on-board computer:

- (green): Active Lane Keeping Assist is active and operating.
- (grey): Active Lane Keeping Assist is active but not operating.
- : Active Lane Keeping Assist is deactivated or there is a malfunction.



If a lane-correcting brake application occurs, display 1 appears in the multifunction display.

The system does not intervene if you activate the turn signal indicator. If the system detects an obstacle, such as another vehicle in the adjacent lane, it will intervene regardless of the turn signal indicator.

If you leave the lane without using the turn signal indicator but an obstacle is detected in your lane, the system will not intervene.

You are warned by vibrations in the steering wheel in the following circumstances:

- Active Lane Keeping Assist detects a lane marking.
- A front wheel drives over this lane marking.

Conditions for a course-correcting brake application (vehicles without Driving Assistance Package)

Depending on the setting, a course correcting brake application occurs in the following situations (→ page 257).

ⓘ The availability of this setting is dependent on the country. If the function is activated in countries in which this setting is **not** available, a lane-correcting brake application is initiated in the following situations:

Lane markings were detected on both sides of the lane. The front wheel drives over a continuous lane marking.

Standard Setting

- A lane marking and the edge of a firm road surface were detected. The front wheel drives over a lane marking on the edge of the firm road surface.
- A lane marking and an oncoming vehicle were detected. The front wheel drives over the lane marking.

Sensitive Setting

- All situations described under the Standard setting.
- A continuous lane marking was detected and driven over with the front wheel.

ⓘ A brake application can be interrupted at any time if you steer slightly in the opposite direction.

Conditions for a course-correcting brake application (vehicles with Driving Assistance Package)

Depending on the setting, a course correcting brake application occurs in the following situations (→ page 257).

ⓘ The availability of this setting is dependent on the country. If the function is activated in countries in which this setting is **not** available, a lane-correcting brake application is initiated in all situations described under Sensitive.

Standard Setting

- A lane marking and an approaching vehicle, an overtaking vehicle or vehicles driving parallel to your vehicle were detected in the adjacent lane. The front wheel drives over the lane marking.

Sensitive Setting

- The situations described under the Standard setting.
- A continuous lane marking was detected and driven over with the front wheel.

ⓘ A brake application can be interrupted at any time if you steer slightly in the opposite direction.

System limits

No lane-correcting brake application occurs in the following situations:

- You clearly and actively steer, brake or accelerate.
- If a driving safety system intervenes, such as ESP®, Active Brake Assist or Active Blind Spot Assist.
- You have adopted a sporty driving style with high cornering speeds or high rates of acceleration.
- When ESP® is deactivated.
- When driving with a trailer, the electrical connection to the trailer has been correctly established.
- If a loss of tyre pressure or a defective tyre has been detected and displayed.

If you deactivate the Active Lane Keeping Assist warning and the lane markings cannot be clearly

detected, it is possible that no lane correcting brake application takes place (⟶ page 257).

The system may be impaired or may not function in the following situations:

- If there is poor visibility, e.g. due to insufficient illumination of the road, if there are highly variable shade conditions or in rain, snow, fog or heavy spray.
- If there is glare, e.g. from oncoming traffic, the sun or reflections.
- If the windscreen in the area of the multifunction camera is dirty, or if the camera is misted up, damaged or covered.
- If there are no lane markings, or several unclear lane markings are present for one lane, e.g. around roadworks.
- If the lane markings are worn, dark or covered.
- If the distance from the vehicle in front is too short and thus the lane markings cannot be detected.
- If the lane markings change quickly, e.g. lanes branch off, cross one another or merge.
- If the carriageway is very narrow and winding.
- **Vehicles with Driving Assistance Package:** if the radar sensors in the rear bumper are dirty or covered in snow and an obstacle is detected in your lane, no lane-correcting brake application takes place.

Activating/deactivating Active Lane Keeping Assist

Multimedia system:

⮑ ⌂ ⏩ Settings ⏩ Quick access ⏩ Active Lane Keeping Assist

▶ Activate or deactivate the function.

Setting Active Lane Keeping Assist

Multimedia system:

⮑ ⌂ ⏩ Settings ⏩ Assistance ⏩ Active Lane Keeping Assist

Setting the sensitivity

ⓘ The availability of this function is dependent on the country.

▶ Select Standard, Sensitive or Off.

Activating or deactivating the haptic warning

▶ Select Warning.
Activate or deactivate the function.

Trailer hitch

Notes on trailer operation

Mercedes-AMG vehicles: observe the notes in the Supplement. You could otherwise fail to recognise dangers.

Observe the following notes on the tongue weight:

- Do not use a tongue weight that exceeds or falls below the permissible tongue weight

- Use a tongue weight as close as possible to the maximum tongue weight

Do not exceed the following values:

- Permissible towing capacity
- Permissible rear axle load of the towing vehicle
- Permissible gross mass of the towing vehicle
- Permissible gross mass of the trailer
- Maximum permissible speed of the trailer

Ensure the following before starting a journey:

- The tyre pressure on the rear axle of the towing vehicle is set for a maximum load
- The lighting of the connected trailer is operational
- **Vehicles without LED headlamps or MULTIBEAM LED headlamps:** the headlamps have been set correctly

In the event of increased rear axle load, the car/trailer combination may not exceed a maximum speed of 100 km/h for reasons concerning the operating permit. This also applies in countries in which the permissible maximum speed for car/trailer combinations is above 100 km/h.

Folding the ball neck out or in

⚠ WARNING Risk of accident due to the ball neck not being engaged

If the ball neck is not engaged, the trailer may come loose.

▶ Always engage the ball neck as described.

⚠ WARNING Risk of injury from ball neck swinging outwards

The ball neck may swing outwards when unlocking or when it has not been properly engaged.

There is a risk of injury within the ball neck's range of movement!

▶ Unlock the ball neck only when its range of movement is unobstructed.

▶ Always be sure the ball neck is engaged when folding inwards.

Requirements:

- The vehicle is secured against rolling away.
- The swivel range is clear.
- The trailer cables or adapter plugs have been removed.

Folding the ball neck out

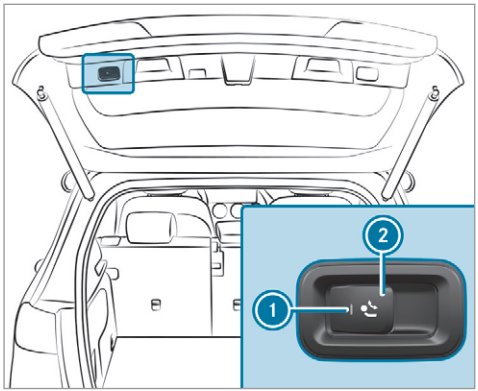

▶ Pull release switch (2) until the ball neck unlocks.
The ball neck will fold out from under the rear bumper.
Indicator lamp (1) will flash.

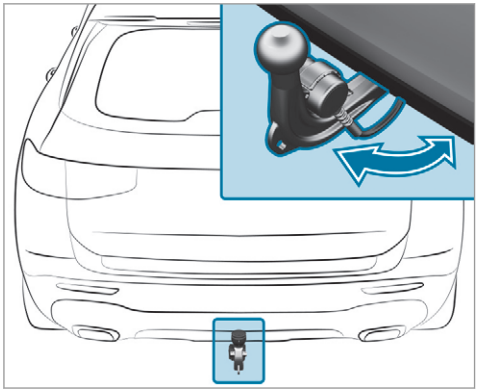

▶ Pull the ball neck in the direction of the arrow until it engages audibly in a vertical position.
Indicator lamp (1) on the ball neck release switch will go out.
If the ball neck is not securely locked in place, the Trailer coupling Check lock message will appear on the multifunction display.

▶ Remove the cover cap from the ball head and store it in a safe place.

Make sure that the ball on the ball neck is clean. Check that it is either greased or dry (grease-free), depending on the instructions for the trailer.

Folding the ball neck in

▶ Pull release switch (2) until the ball neck unlocks.
The ball neck will fold up under the rear bumper.
Indicator lamp (1) will flash.

▶ Push the ball neck in the direction of the arrow until it engages audibly behind the bumper.
Indicator lamp (1) will go out and the message on the multifunction display will disappear.

Observe the information about the displays on the instrument cluster:

- Indicator and warning lamps (→ page 440)
- Display messages (→ page 386)

Folding the ball neck in/out fully electrically (multimedia system)

WARNING Risk of accident due to the ball neck not being engaged

If the ball neck is not engaged, the trailer may come loose.

- Always engage the ball neck as described.

NOTE Damage to the all-electric trailer hitch due to additional pressure

The all-electric trailer hitch could be mechanically damaged by applying additional pressure when the ball neck is being extended or retracted.

- Do not make the ball neck extend/retract faster by applying additional pressure.

Requirements:

- The vehicle is secured against rolling away.
- The swivel range is clear.
- The trailer cables or adapter plugs have been removed.

Multimedia system:

↪ ⌂ » Settings » Quick access

Extending the ball neck fully electrically

- Select ⍾.

The Trailer coupling extending... display message appears in the multifunction display.

The ball neck will extend fully electrically.

- Wait until the ball neck has locked in place.

If the ball neck is not securely locked in place, the Check trailer hitch lock message will appear on the multifunction display.

Retracting the ball neck fully electrically

- Select ⍾.

The Trailer coupling extending... display message appears in the multifunction display.

The ball neck will retract fully electrically.

- Wait until the ball neck has locked in place.

If the ball neck is not securely locked in place, the Check trailer hitch lock message will appear on the multifunction display.

Coupling/uncoupling a trailer

Requirements:

- The ball neck is extended and engaged in a securely locked position.

Trailers with a 7-pin plug can be connected to the vehicle with the following adapters:

- Adapter plug
- Adapter cable

The trailer will be correctly detected by the vehicle only if the following conditions are met:

- The trailer is connected correctly
- The trailer lighting system is in working order

The functions of the following systems will be affected by a correctly connected trailer:

- Active Lane Keeping Assist
- ESP® trailer stabilisation

- Parking Assist PARKTRONIC
- Active Parking Assist
- Blind Spot Assist or Active Blind Spot Assist
- Drive Away Assist
- Cross Traffic Alert
- Reversing camera
- 360° camera

Coupling up a trailer

! NOTE Damage to the starter battery due to full discharge

Charging the trailer battery using the power supply of the trailer can damage the starter battery.

▶ Do not use the vehicle's power supply to charge the trailer battery.

▶ Remove the cover from the ball head and store it in a safe place (→ page 114).

▶ Position the trailer on a level surface behind the vehicle and couple it up to the vehicle.



▶ Open the socket cap.

▶ Insert the plug with lug 1 in groove 3 on the socket.

▶ Turn bayonet coupling 2 to the right as far as it will go.

▶ Let the cap engage.

▶ Secure the cable to the trailer with cable ties (only if you are using an adapter cable).

▶ Make sure that the cable is always slack for ease of movement during cornering.

Under the following conditions, a message may appear on the multifunction display even if the trailer has been connected correctly:

- LEDs have been installed in the trailer lighting system
- The current has fallen below the trailer lighting system's minimum current (50 mA)

ⓘ Accessories can be connected to the permanent power supply up to 180 W and to the power supply that is switched on via the ignition lock.

Uncoupling a trailer

⚠ WARNING Risk of being crushed and becoming trapped when uncoupling a trailer

When uncoupling a trailer with an engaged inertia-activated brake, your hand may become trapped between the vehicle and the trailer drawbar.

▶ Do not uncouple trailers with an engaged overrun brake.

NOTE Damage when uncoupling in a state of overrun

Uncoupling in a state of overrun can damage the vehicle.

- Do not uncouple trailers with an engaged overrun brake.

- Secure the trailer against rolling away.
- Disconnect the electrical connection between the vehicle and the trailer.
- Uncouple the trailer.
- Place the cover cap on the ball head.

Bicycle rack function

WARNING Risk of an accident when using the bicycle rack incorrectly

The bicycle rack may become detached from the vehicle in the following cases:

- the permissible load capacity of the trailer hitch is exceeded.
- the bicycle rack is used incorrectly.
- the bicycle rack is secured to the ball neck beneath the ball head.

Observe the following for your own safety and that of other road users:

- always adhere to the permissible load capacity of the trailer hitch.
- only use the bicycle rack to transport bicycles.
- always properly secure the bicycle rack by attaching it to the ball head.
- only use bicycle racks approved by Mercedes-Benz.
- always observe the bicycle rack operating instructions.

NOTE Damage to, or cracks on, the trailer hitch due to unsuitable bicycle racks or bicycle racks being used incorrectly

- use only bicycle racks approved by Mercedes-Benz.

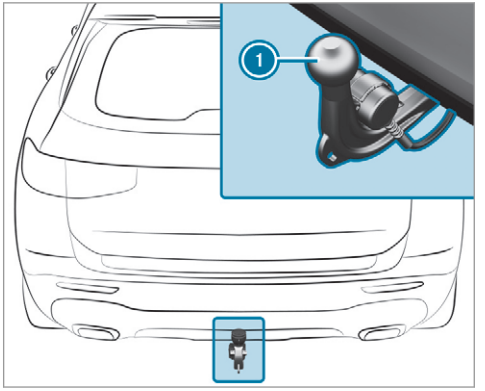

Depending on the bicycle rack's design, up to three bicycles can be transported on the bicycle rack.

When mounted by attaching to ball head (1), the maximum load capacity is 75 kg.

The load capacity is calculated from the weight of the bicycle rack and the bicycle rack load.

The vehicle's driving characteristics will change when a bicycle rack is fitted. Adapt your driving

style accordingly. Drive carefully and maintain a safe distance.

When using a bicycle rack, set the tyre pressure for maximum loading on the rear axle of the vehicle. Further information on the tyre pressure can be found in the tyre pressure table (→ page 352).

Notes on loading

The larger the distance between the load's centre of gravity and the ball head, the greater the load on the trailer hitch.

Therefore, observe the following notes:

- mount heavy bicycles as close to the vehicle as possible
- always distribute the load on the bicycle rack as evenly as possible across the vehicle's longitudinal axis

Mercedes-Benz recommends removing all detachable parts from bicycles (e.g. baskets, child seats, rechargeable batteries) before loading them onto the bicycle rack. This will improve the aerodynamic resistance and centre of gravity of the bicycle rack.

Always secure the bicycles to prevent them from moving around and check them at regular intervals to ensure that they are secure.

Do not use tarpaulins or other covers. The driving characteristics and rear view may be impaired. In addition, aerodynamic resistance and the load on the trailer hitch will increase.

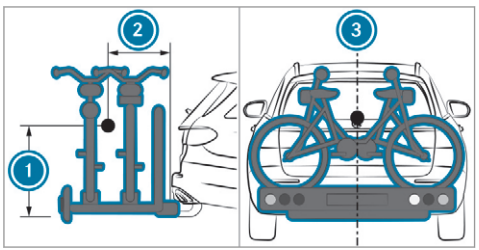

Load distribution on the bicycle rack

1. Vertical distance between centre of gravity and ball head
2. Horizontal distance between centre of gravity and ball head
3. The centre of gravity is on the vehicle's centre axis

Observe the following information when you are loading the bicycle rack with up to three bicycles:

Loading the bicycle rack

Total weight of bicycle rack and load	Max. distance 1	Max. distance 2
Up to 75 kg	420 mm	300 mm

Vehicle towing instructions

The vehicle is not suitable for the use of tow bar systems that are used for flat towing or dinghy towing, for example. Attaching and using tow bar systems can lead to damage on the vehicle. When you are towing a vehicle with tow bar systems, safe driving characteristics cannot be guaranteed for the towing vehicle or the towed vehicle. The vehicle-trailer combination may swerve from side to side. Comply with the permitted towing methods (→ page 341) and the instructions for towing with both axles on the ground (→ page 342).

Notes on the instrument display and on-board computer

WARNING Risk of accident due to an instrument display malfunction

If the instrument display has failed or malfunctioned, the function restrictions applying to safety relevant systems are not visible.

The operating safety of your vehicle may be impaired.

- Drive on carefully.
- Have the vehicle checked immediately at a qualified specialist workshop.

WARNING Risk of distraction from information systems and communications equipment

If you operate information and communication equipment integrated in the vehicle when driving, you will be distracted from the traffic situation. This could also cause you to lose control of the vehicle.

- Only operate this equipment when the traffic situation permits.
- If you cannot be sure of this, stop the vehicle whilst paying attention to road and traffic conditions and operate the equipment with the vehicle stationary.

You must observe the legal requirements for the country in which you are currently driving when operating the on-board computer.

The on-board computer shows only display messages and warnings from specific systems on the multifunction display. You must therefore ensure that your vehicle is always reliable.

If the operating safety of your vehicle is impaired, park the vehicle immediately and safely. Contact a qualified specialist workshop.

Mercedes-AMG vehicles: be sure to observe the notes in the Supplement. You could otherwise fail to recognise dangers.

Instrument display overview

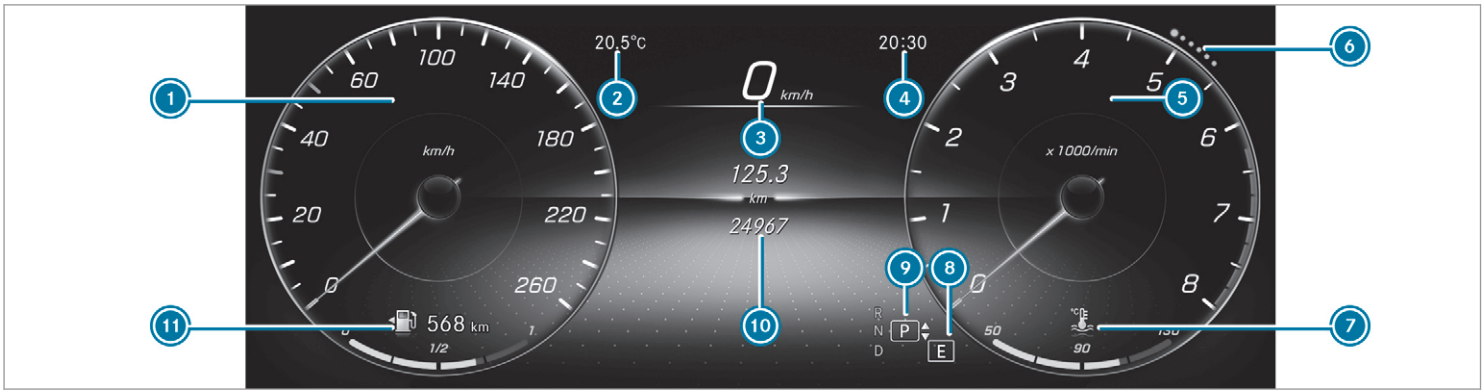

1. Display content on left (example: speedometer): speedometer / time / date / trip computer From start and From reset/ range / audio
   The segments on the speedometer indicate the status of the following systems: cruise control / limiter / Active Distance Assist DISTRONIC
2. Outside temperature
3. Digital speedometer
4. Time
5. Display content on right (example: tachometer): tachometer / average fuel consumption / ECO display / navigation / G-meter / assistant display
   The fuel supply will be interrupted to protect the engine when the red mark on the rev counter (overrevving range) is reached.
6. Index points
   These show the selected display or menu content.
7. Coolant temperature display

The coolant temperature display is permitted to rise to 120 °C during normal operation.

Vehicles with 48 V on-board electrical system: POWER and CHARGE display (electrical drive support and recuperation power of the electric motor)

8 Selected drive program

9 Selected transmission position

10 Multifunction display (example: standard display for trip): Assistance / Telephone / Navigation / Trip / Media / Radio / Styles and displays / Service

11 Fuel level, fuel filler flap location indicator, range

Overview of the buttons on the steering wheel

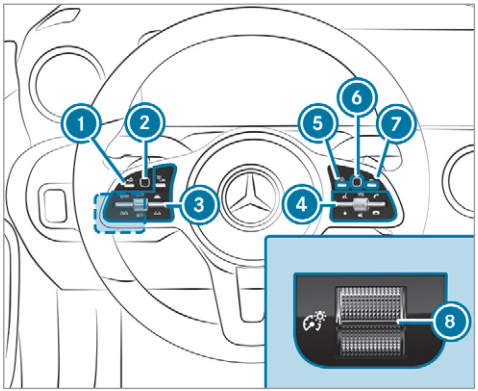

1 Back/Home button (press and hold), on-board computer

2 Touch Control, on-board computer

3 Control panel for cruise control/limiter or Active Distance Assist DISTRONIC

4 Control panel for the MBUX multimedia system (→ page 271)
LINGUATRONIC

5 To call up the home screen of the multimedia system

6 Touch Control multimedia system

7 Back button (multimedia system)

8 Brightness control to adjust the lighting in the Instrument Display and in the control elements of the vehicle interior

Operating the on-board computer

Observe the legal requirements for the country in which you are currently driving when operating the on-board computer.

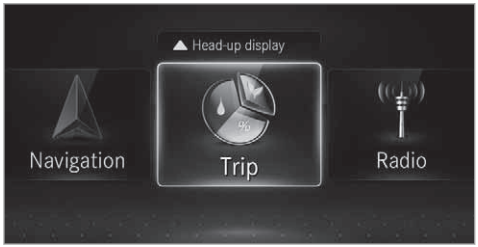

The on-board computer is operated using the left-hand Touch Control and the left-hand back/home button.

When the on-board computer is being operated, different acoustic signals will sound as operating feedback, e.g. when the end of a list is reached or when you are scrolling through a list.

The following menus are available:

- Assistance
- Telephone
- Navigation
- Trip
- Radio
- Media
- Styles & display
- Service

ⓘ You can find information about the possible settings and selections on the menus in the Digital Owner's Manual.

▶ **To call up the menu bar:** press the left-hand back button until the menu bar is displayed.

ⓘ **Vehicles without Active Distance Assist DISTRONIC:** press the ⌂ button to call up the menu bar of the on-board computer.

▶ **To scroll in the menu bar:** swipe left or right on the left-hand Touch Control.

▶ **To call up a menu, submenu or possible settings on the menu, or confirm a selection or setting:** press the left-hand Touch Control.

▶ **To scroll through displays or lists on the menu, or select display content, a function, an entry or a display:** swipe upwards or downwards on the left-hand Touch Control.

▶ **To exit a submenu:** press the left-hand back button.

Selecting the head-up display

▶ **To switch on the head-up display:** switch on the head-up display via the multimedia system or activate it in the menu bar by swiping upwards on the left-hand Touch Control. The head-up display menu has been selected on the head-up display.

▶ **To switch to the head-up display:** press the left-hand Touch Control or swipe upwards on the left-hand Touch Control.

▶ **To select what the head-up display shows:** swipe upwards or downwards on the left-hand Touch Control.

Full-surface menus

Vehicles with an instrument display in the widescreen cockpit: the following menus can be shown in full on the instrument display:

- Assistance
- Trip
- Navigation

- On the corresponding menu, use the left-hand Touch Control to scroll to the end of the list.
- Press the left-hand Touch Control.
The selected menu will be displayed in full.

Overview of what is shown on the multifunction display

Also shown on the multifunction display:

- Active Parking Assist (→ page 243)
- Parking Assist PARKTRONIC deactivated (→ page 234)
- Cruise control (→ page 213)
- LIM Limiter (→ page 213)
- Active Distance Assist DISTRONIC (→ page 217)
- Active Brake Assist (→ page 208)
- Active Steering Assist (→ page 224)
- Active Lane Keeping Assist (→ page 255)
- Active Lane Change Assist (→ page 226)
- ECO start/stop function (→ page 177)
- HOLD HOLD function (→ page 228)
- Adaptive Highbeam Assist (→ page 143)
Adaptive Highbeam Assist Plus (→ page 144)
- 120 km/h! Maximum permissible speed exceeded (for certain countries only)

Vehicles with Speed Limit Assist: detected instructions and traffic signs (→ page 248).

Vehicles with Traffic Sign Assist: detected instructions and traffic signs (→ page 250).

Head-up Display

Function of the head-up display

The head-up display projects the following information above the cockpit into the driver's field of vision:

- Driving speed
- Information from the navigation system
- Information from the driving systems and driving safety systems
- Some warning messages

Depending on the vehicle's equipment, different content can be shown in the three display areas of the head-up display (→ page 269).

Display content

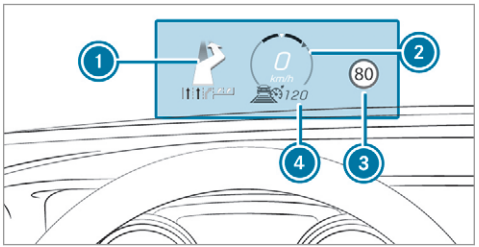

1. Navigation instructions
2. Current speed
3. Detected instructions and traffic signs
4. Set speed in the driving system (e.g. cruise control)

System limits

The visibility of the displays will be affected by the following conditions:

- Seat position
- Image position setting
- Light conditions
- Wet carriageways
- Objects on the display cover
- Polarisation in sunglasses

ⓘ In extreme sunlight, sections of the display may appear washed out. You can correct this by deactivating and reactivating the head-up display.

Setting the head-up display using the on-board computer

On-board computer:

↳ HEAD-UP DISPLAY

The following head-up display settings can be selected:

- Position
- Brightness
- Displays
- Messages
- Assistance status
- Telephone
- Audio
- Linguatronic

▶ **To choose a setting:** swipe to the right on the left-hand Touch Control.
The Settings menu (5) will be selected.

▶ **To call up the Settings menu:** press the left-hand Touch Control.

▶ **To adjust the position:** swipe upwards or downwards on the left-hand Touch Control.

▶ **To adjust the brightness:** swipe to the left or right on the left-hand Touch Control.

▶ **To set messages, assistance status, telephone, audio and LINGUATRONIC:** press the left-hand Touch Control.
The list of setting options will be displayed.

▶ Swipe upwards or downwards on the left-hand Touch Control and select a setting by pressing the left-hand Touch Control.

Selecting what the head-up display shows

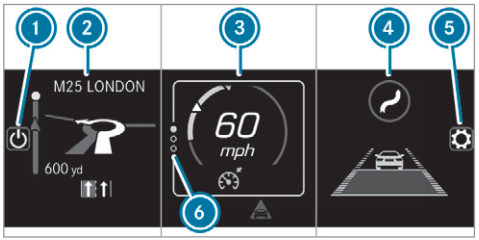

(Example)

(1) Switches the head-up display on/off

(2) Left display area
Navigation system
Average consumption
G-meter

(3) Central display area
Set speed in the driver assistance system, e.g. cruise control

Warnings from driver assistance systems, e.g. distance warning

④ Right display area
Traffic Sign Assist
Assistant display

⑤ Configuring the settings

⑥ Index points

Display areas ② to ④ that are not required can be hidden.

ⓘ In audio mode, the station name or track will be shown temporarily when the audio source is being actively operated. In addition, the latest calls will be displayed when the telephone list on the instrument display is actively operated.

▶ **To select a display:** swipe upwards or downwards on the left-hand Touch Control.

Switching the head-up display on/off via the multimedia system

Multimedia system:

→ ⌂ ▸▸ Settings ▸▸ Quick access

▶ Select HUD.
The head-up-display is activated.

Overview and operation

Notes on the MBUX multimedia system

WARNING Risk of distraction from information systems and communications equipment

If you operate information and communication equipment integrated in the vehicle when driving, you will be distracted from the traffic situation. This could also cause you to lose control of the vehicle.

- Only operate this equipment when the traffic situation permits.
- If you cannot be sure of this, stop the vehicle whilst paying attention to road and traffic conditions and operate the equipment with the vehicle stationary.

You must observe the legal requirements for the country in which you are currently driving when operating the multimedia system.

Overview of the MBUX multimedia system

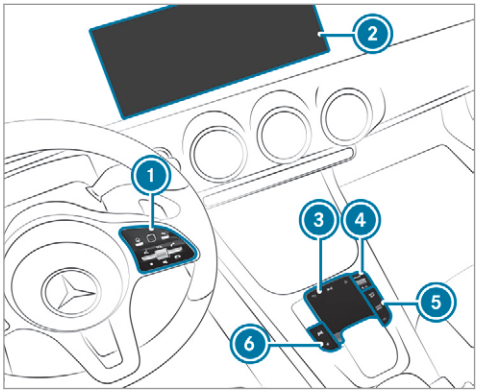

1. Touch Control and control panel for the MBUX multimedia system
2. Media display with touch functionality
3. Touchpad
4. Controller
   Turning: adjusts the volume
   Pressing briefly: switches the mute function on/off
   Pressing and holding: switches the multimedia system or media display on or off
5. Buttons for navigation, radio/media and telephone
6. Buttons for vehicle functions/system settings and favourites/themes

Further operating options:

- Conducting a voice dialogue with LINGUATRONIC.
- Operating functions contact-free with the MBUX Interior Assistant.

ⓘ You can find further information about operation as well as about applications and services in the Digital Owner's Manual.

Anti-theft protection

This device is equipped with technical provisions to protect it against theft. More detailed information about anti-theft protection can be obtained at a qualified specialist workshop.

Home screen overview

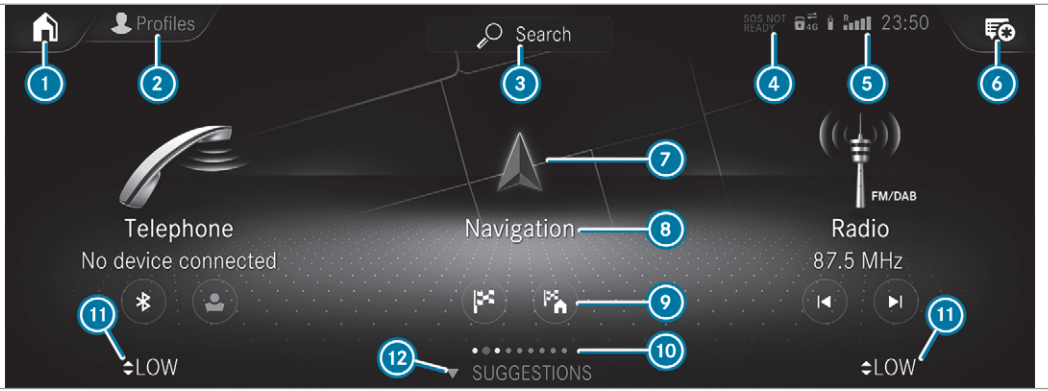

1. Depending on the display, calls up the first three applications or the home screen
2. Calls up the profile
3. Calls up the global search
4. SOS NOT READY (only when the Mercedes-Benz emergency call system is not available)
5. Signal strength of the mobile phone network, network display, battery status of the mobile phone connected, time
6. Calls up the Notifications Centre
7. Calls up an application using the symbol
8. Application and current information
9. Quick-access, e.g. enter home address
10. Index points and selected display area
11. Calls up the air conditioning menu
12. Calls up SUGGESTIONS, THEMES and FAVOURITES

Operating the MBUX multimedia system

Using Touch Control

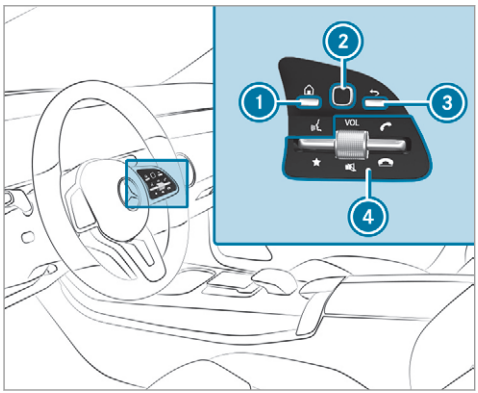

1. ⌂ Calls up the home screen
2. Touch Control
3. ↩ Pressing briefly: returns to the previous display
4. ★ Pressing the rocker switch down briefly: shows favourites

★ Pressing the rocker switch down and holding: adds favourites and themes

VOL: control adjusts the volume or switches the sound off 🔇 (press)

✆ Pressing the rocker switch up: makes or accepts a call

✆ Pressing the rocker switch down: rejects or ends a call

Navigation through the menus is carried out with Touch Control ② with single-finger swipes.

- **To select a menu option:** swipe and press.
- **To move the digital map:** swipe in any direction.

Using the touchscreen

- Select menu options, symbols or characters by pressing briefly.
- **To navigate in menus:** swipe up, down, left or right.
- **To use handwriting to enter characters:** write the character with one finger on the touchscreen.
- **To zoom in and out of the map:** move two fingers together or apart.
- **To call up the global menu:** press and hold on the touchscreen until the OPTIONS menu appears.

Using the touchpad

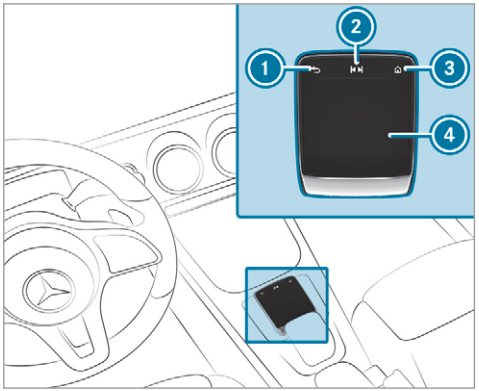

1. ↩ Returns to the previous display
2. ⏮⏭ Calls up the audio control menu

Swiping to the left of right: selects the previous or next radio station/music track

③ ⌂ Calls up the home screen

④ Touchpad

- **To select a menu option:** swipe and press.
- **To use handwriting recognition:** write a character on the touchpad.
- **To open or close the Notifications Centre:** swipe down or up with two fingers.
- **To zoom in and out of the map:** move two fingers together or apart.

Calling up applications using buttons

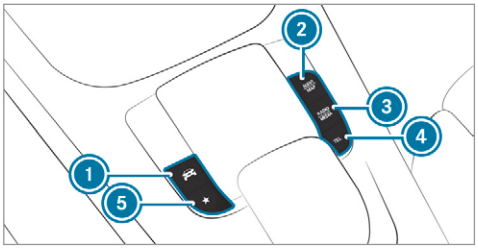

① Calls up vehicle functions

② NAVI MAP Calls up navigation

③ RADIO MEDIA Calls up radio or media

④ TEL Calls up the telephone

⑤ ★ Press briefly: calls up favourites
Press and hold: adds a favourite or theme

- Alternatively, tap ⌂ on the touchscreen.

or

- Press the ⌂ button on the Touch Control or on the touchpad.
The home screen appears.
- Call up the application (→ page 272).

Functions of LINGUATRONIC

With LINGUATRONIC, various applications in the MBUX multimedia system are operable using voice input. LINGUATRONIC is operational approximately thirty seconds after the ignition is switched on and is available for the driver's seat and front passenger seat.

The following multimedia system applications can be operated:

- Navigation
- Telephone
- Radio and TV
- Media player
- Messages
- Vehicle functions

Starting LINGUATRONIC

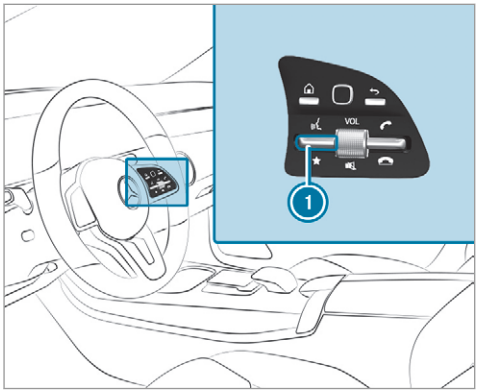

- Press rocker switch (1) up.

or

- Say "Hey Mercedes".

Overview of the MBUX Interior Assistant

WARNING Risk of injury due to laser beams from the camera

This product uses a class 1 laser system If the housing is opened or damaged, invisible laser beams could damage your retina.

- Do not open the housing.
- Always have maintenance work and repairs carried out by a qualified specialist workshop.

This device is a class 1 laser product in accordance with DIN EN 60825-1:2014

The camera is located in the overhead control panel.

If the vehicle is fitted with the MBUX Interior Assistant, selected functions of the multimedia system can be operated contact-free. The MBUX Interior Assistant can differentiate between driver and front passenger interactions and detects specific hand positions (poses).

For further information on system limits, display messages and troubleshooting notes, see the Digital Owner's Manual.

The MBUX Interior Assistant supports the following interactions:

Interaction area	Interaction	Description
In front of the media display or above the touchpad	Proximity to the control element	The Interior Assistant recognises the approach of the hand towards a control element. Depending on the active application, the display will be adjusted in the media display. Some functions differentiate between driver and front passenger. No specific hand position is required.
Above the centre console	Defined poses	With defined poses a function is triggered depending on the application active.
Below the inside rearview mirror	Brief up and down movements	With brief vertical up and down movements below the inside rearview mirror the reading light for the driver or the front passenger is switched on and off.
Front passenger seat	Stretching out a hand above the front passenger seat	By stretching out a hand above the front passenger seat the search light is switched on. If you withdraw a hand from this area, the search light is switched off again.

Switching the reading light and search light and on or off

Requirements:

- **For the reading light:** the function is available when it is dark.
- The hand movement takes place in the interaction area below the inside rearview mirror.
- **For the search light:** the function is available when it is dark.
- The hand movement takes place in the interaction area above the front passenger seat.

- The seat belt on the front passenger seat must **not** be inserted in the seat belt buckle.

Switching the reading light on and off



▶ Briefly move a hand up or down beneath the inside rearview mirror.
The reading light is switched on or off for the driver or front passenger.

Switching the search light on and off

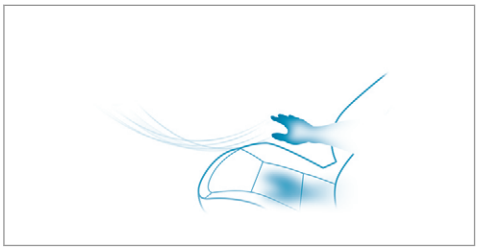

▶ **To switch on:** reach across the front passenger seat with a hand.
The search light is switched on for the driver.
▶ **To switch off:** take a hand back away from the front passenger seat.
The search light is switched off again.

Information on profiles, themes, suggestions and favourites

⚠ **WARNING** Risk of becoming trapped during adjustment of the driver's seat after calling up a driver profile

Selecting a profile may trigger an adjustment of the driver's seat to the position saved under the profile. You or other vehicle occupants could be injured in the process.

▶ Make sure that when the position of driver's seat is being adjusted using the multimedia system, no people or body parts are in the seat's range of movement.

If there is a risk of someone becoming trapped, stop the adjustment process immediately:

▶ a) Tap the warning message on the media display.

or

▶ b) Press a memory position button or a seat adjustment switch on the driver's door.
The adjustment process is stopped.

The driver's seat is equipped with an access preventer.

If the driver's door is open, the driver's seat will **not** be set after calling up the driver's profile.

Profiles store your vehicle settings and settings for the multimedia system. If the vehicle is used by several drivers, the driver can select their own profile without needing to change the settings of other drivers.

ⓘ Information on profiles from Mercedes me connect can be found in the Digital Operator's Manual.

Vehicle settings are, for example, driver's seat, steering wheel and mirror settings, climate control and ambient lighting. For the settings of the multimedia system, you can select, for example, radio stations, previous destinations as well as themes, suggestions and favourites.

For recurring driving situations, such as long drives on the motorway, you can save your preferred settings in a theme in the vehicle. In a theme you can save the display of the digital map, your preferred radio station and preferred drive program, for example.

The vehicle can learn the habits of the driver. It then offers suggestions for the most probable navigation destinations, media sources, radio stations or contacts. The pre-requirements for that are the selection of a profile, your consent to the recording of data and sufficient collected data.

Favourites provide quick access to applications that are used often. You can select favourites from categories or add them directly to an application.

Configuring profiles, themes and suggestions

Multimedia system:
↳ ⌂ » 👤 Profiles

Creating a new profile

▶ Select ＋ Create profile .
▶ Select an avatar.
▶ Enter the name and confirm with OK.
▶ Select Continue ❯ .
▶ Select Current settings.
▶ Select Save.
▶ Activate Bluetooth® and select Connect phone, to connect a mobile phone with the user profile .
▶ Select Finished.

Selecting profile options

▶ Select ••• for a profile.
The following functions are available:
- Editing, resetting or deleting a profile
- Resetting themes or favourites

- Configuring suggestions

Configuring suggestions

- Select [•••] for a profile.
- Select Suggestions settings.
- Switch Allow destination suggestions, Allow music suggestions and Allow contact suggestions on or off.
- **To deactivate the learning function for one day:** activate Deactiv. intelligent learning for 24h.
  For 24 hours no new actions will be trained and no data recorded for the active profile. Suggestions will continue to be shown.
  Example: if the option is switched on and a route to a new destination has been calculated, this destination would not be taken into account for the learning function.

Creating new themes

- Select [⌂].
- Select THEMES.
- Select [+] Set theme.
  The settings which are saved in the theme are shown.
- Select Continue [>].
- Select Audio and Navigation (Navigation) and store the active settings in the theme.
- Select Continue [>].
- Select an entry screen.
- Select Continue [>].
- Select an image.
- Enter the names into the entry field and confirm with [OK].
- Select Save.

System settings

Overview of the system settings menu

In the system settings menu, you can make settings in the following menus and control elements:

- Display
  - Styles
  - Instrument lighting
  - Display brightness
  - Edge lighting
  - Day/night design
- Control elements
  - Keyboard language and handwriting recognition
  - Touchpad sensitivity
  - Sensitivity of the Touch Controls
- LINGUATRONIC
- MBUX Interior Assistant
- Sound
  - Entertainment
  - Navigation and traffic announcements
  - Telephone
  - Voice amplification to the rear
- Connectivity
  - Wi-Fi, Bluetooth, NFC
- MBUX Remote Control
  - Authorising and deauthorising devices

- Time & date
- Language
- Units for distance
- Software updates
- Data import/export
- PIN protection
- System Reset

Information on important system updates

Important system updates may be necessary for the security of your multimedia system's data. Install these updates, or else the security of your multimedia system cannot be ensured.

A system update consists of three steps:

- Downloading or copying of the data required for installation
- Installation of the downloaded system update
- Activation of the downloaded system update by restarting the system

ⓘ If automatic software updates are activated, the system updates will be downloaded automatically.

The multimedia system provides a message when a system update is available.

You have the following selection options:

- Accept and install

  The system update will be downloaded in the background.
- Information

  Information about the pending system update is displayed.
- Later

  The system update can be downloaded manually at a later time.

Deep system updates

Deep system updates access vehicle or system settings and can therefore only be carried out when the vehicle is stationary and the ignition is switched off.

If the download of a deep system update is completed and the downloaded system update is ready for installation, you will be informed of this after the next ignition cycle, for example.

ⓘ Park the vehicle safely in a suitable location before starting the installation.

Requirements for the installation:

- The ignition is switched off.
- Notes and warnings have been read and accepted.
- The electric parking brake is applied.

If all requirements have been fulfilled, the downloaded system update is installed. The multimedia system cannot be operated while the downloaded system update is being installed and vehicle functions are restricted.

If errors should occur during the installation, the multimedia system automatically attempts to restore the previous version. If restoration of the previous version is not possible, a symbol appears on the media display. Consult a qualified specialist workshop to resolve the problem.

Setting up a Wi-Fi hotspot

Requirements:

- **To set up the Wi-Fi connection of the multimedia system with external hotspots:** there is no communication module installed.
- The device to be connected supports at least one of the types of connection described.

Multimedia system:

→ ⌂ ▸▸ Settings ▸▸ System ▸▸ Wi-Fi & Bluetooth

Activating/deactivating Wi-Fi

▶ Select Wi-Fi.

Connecting the multimedia system with an external hotspot using Wi-Fi

The type of connection established must be selected on the multimedia system and on the device to be connected.

ⓘ The connection procedure may differ depending on the device. Follow the instructions that are shown in the display. Further information can be found in the manufacturer's operating instructions.

▶ Select Internet settings.
▶ Select Connect via Wi-Fi.
▶ Select Add hotspot.

Connecting using a security key

▶ Select the options ❯ of the desired Wi-Fi network.
▶ Select Connect using security key.
▶ Have the security key displayed on the device to be connected (see the manufacturer's operating instructions).
▶ Enter this security key on the multimedia system.
▶ Confirm the entry with ok.

Connecting using a WPS PIN

▶ Select the options ❯ of the desired Wi-Fi network.
▶ Select Connect using WPS PIN input.
The multimedia system generates an eight-digit PIN.
▶ Enter this PIN on the device to be connected.
▶ Confirm the entry.

Connecting using a button

▶ Select the options ❯ of the desired Wi-Fi network.
▶ Select Connect via WPS PBC.
▶ Select "Connect via WPS PBC" in the options on the device to be connected (see the manufacturer's operating instructions).
▶ Press the WPS button on the device to be connected.
▶ Select Continue in the multimedia system.

Activating automatic connection

▶ Select Connect via Wi-Fi.
▶ Select the options ❯ of the desired Wi-Fi network.
▶ Activate Permanent Internet connection.

Connecting with a known Wi-Fi

▶ Select Connect via Wi-Fi.
▶ Select a Wi-Fi network.
The connection is established again.

Configuring the multimedia system as a Wi-Fi hotspot for external devices

The type of connection established depends on the device to be connected. The function must be supported by the multimedia system and by the device to be connected. The type of connection established must be selected on the multimedia system and on the device to be connected.

- Select Vehicle hotspot.
- Select Connect device to vehicle hotspot.

Connecting using WPS PIN generation

- Select Connect using WPS PIN generation.
- Enter the PIN shown in the media display on the device to be connected and confirm.

Connecting using WPS PIN entry

- Select Connect using WPS PIN input.
- Enter the PIN that is shown on the external device's display on the multimedia system.

Connecting using a button

- Select Connect via WPS PBC.
- Press the push button on the device to be connected (see the manufacturer's operating instructions).
- Select Continue.

Connecting using a security key

- Select Connect device to vehicle hotspot.
  A security key is displayed.
- Select the vehicle from the device to be connected. The vehicle is displayed with the MB Hotspot XXXXX network name.
- Enter the security key which is shown in the media display on the device to be connected.
- Confirm the entry.

Connecting using NFC

- Select Connect via NFC.
- Activate NFC on the mobile device (see the manufacturer's operating instructions).
- Bring the mobile device into the NFC interface of the vehicle.
- Select Finished.
  The mobile device is now connected to the multimedia system hotspot via NFC.

Generating a new security key

- Select Vehicle hotspot.
- Select Generate security key.
  A connection will be established with the newly created security key.
- **To save a security key:** select Save.
  When a new security key is saved, all existing Wi-Fi connections are then disconnected. If the Wi-Fi connections are being re-established, the new security key must be entered.

Navigation

Notes on navigation

Route guidance with augmented reality

⚠ **WARNING** Risk of accident and injury as a result of distraction, incorrect depiction or wrong interpretation of the display

The camera image of the augmented reality display is not suitable as a guide for driving.

- Always keep an eye on the actual traffic situation.
- Avoid extended observation of the camera image.

WARNING Risk of accident and injury due to imprecise positioning of additional information

The additional information from the augmented reality display is not a substitute for observing the actual driving situation.

- Always keep an eye on the actual traffic situation when carrying out all driving manoeuvres.

Switching navigation on

Multimedia system:

→ ⌂ » Navigation (Navigation)

- Alternatively: press the NAVI MAP button.
  The map displays the current vehicle position. The navigation menu is shown.

The navigation menu is hidden if route guidance is active.

- **To show:** tap on the touchscreen.
  The menu is hidden automatically.

Navigation overview



Example: digital map with navigation menu

1. To enter a POI or address and additional destination entry options
2. To cancel active route guidance
3. To repeat a navigation announcement and switch navigation announcements on or off
4. ON ROUTE menu with Route overview, Alternative routes and Report traffic incident (Car-to-X)
   TRAFFIC menu with Traffic announcements, Area announcements and Live Traffic Subscription Info
   To display Route list
   POSITION menu with Store position, Compass and Qibla
5. Quick access for Traffic, Parking and Motorway information as well as options for View, Announcements and Route via Advanced

Entering a destination

Multimedia system:

→ ⌂ ▸▸ Navigation ▸▸ Where to?



1. Country in which the vehicle is located
2. Entering a POI or address
3. List with additional destination entry options
4. Deletes an entry
5. OK Confirming an entry
6. Switches to handwriting recognition
7. Enters a space
8. Switches to voice input
9. Sets the written language
10. Switches to digits, special characters and symbols
11. Switches to upper-case or lower-case letters

- ▶ Enter the destination in ②. The entries can be made in any order.
  The following entries can be made, for example:
  - City, street, house number
  - Street, town
  - Postcode
  - POI name or POI category, e.g. Parking
  - Contact name
- ▶ Select a search result in list ③.
  The route can be calculated.

ⓘ You can find further information about destination entry, e.g. 3 word addresses, in the Digital Owner's Manual.

Changing country

- ▶ Select the country indicator in ①.
- ▶ Enter the country indicator.
- ▶ Select the country in ③.

Using online search

Destination entry uses online map services. If the on-board search finds no suitable destinations or if you change countries, the online search is available.

For the destination you can enter an address, a POI or a 3 word address.

- ▶ Select country indicator ①.
- ▶ Select the provider for the online service from the countries list.

or

- ▶ If the on-board search delivers no results, enter the destination in input line ②.
- ▶ Select the destination in the list.
  The detailed view for the route is displayed.

Calculating a route and using settings for route guidance

Requirements:

- The destination has been entered.
- The destination address is shown.

Multimedia system:

→ ⌂ ▸▸ Navigation

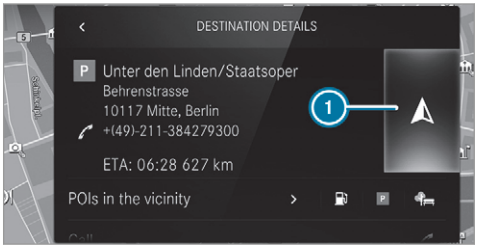

① ⮝ No route yet.
⮝ A route has been mapped.

- ▶ Select ⮝.
  The route to the destination is calculated. Route guidance begins.

or

- ▶ Select ⮝.
- ▶ Select Set as intermediate dest..
  The destination address is set as the next intermediate destination.

or

- Select Start new route guidance.
  The destination address is set as the new destination. The previous destination and the intermediate destinations are deleted. Route guidance to the new destination begins.

Selecting route settings

- Select ⚙.
- Select Advanced.
- Select Route.
- Select the route type.
- Take traffic information into consideration with Dynamic route guidance ›.
- Select route options with Avoid options.
- Activate Suggest alternative route.
  Alternative routes are calculated for every route.
- Activate Activate commuter route.
  If the requirements are met, the multimedia system automatically detects that the vehicle is on a commuter route. Route guidance begins without voice output.

Activating route guidance with augmented reality

- During route guidance, tap on the camera symbol on the media display.
  The camera image will be shown instead of the navigation map before a turning manoeuvre and will show additional information.
- **To return to the navigation map:** tap on the camera symbol again.

Displaying additional information in the camera image

- Select ⚙.
- Select Advanced.
- Select Augmented Reality.
- Activate Street names and House numbers.
  During route guidance, street names and house numbers are shown in the camera image.

Using map functions

Multimedia system:
↳ ⌂ » Navigation

Setting the map scale

- **To zoom in:** tap twice quickly with one finger on the media display.
- **To zoom out:** tap with two fingers on the media display.

Moving the map

- Move one finger in any direction on the touchscreen.
- **To reset the map to the current vehicle position:** press ⌖ briefly.

Selecting map orientation

- Tap repeatedly on the ⊘ compass symbol on the map.
  The view changes in the sequence 3D, 2D heading up to 2D north up.

Switching motorway information on/off

- Select ⚙.

- Switch Motorway information on or off.

Using services

Requirements:

- There is an Internet connection.
- Mercedes me connect is available.
- You have set up a user account in the Mercedes me Portal.
- The vehicle is connected to a user account and you have accepted the conditions of use for the service.

  Further information can be found at: https://www.mercedes.me
- The service is available and has been activated.

Multimedia system:

→ ⌂ » Navigation

Displaying the traffic situation with Live Traffic Information

- Select ☼.
- Activate Traffic.
- Select Advanced.
- Select View.
- Select Map elements.
- Switch on Traffic incidents, Free-flowing traffic and Delay.
  If traffic information has been received, then traffic incidents such as roadworks, road blocks, local area reports (e.g. fog) and warning messages are displayed.

  The traffic delay is displayed for the current route. Traffic delays lasting one minute or longer are taken into consideration.

Displaying hazard warnings with Car-to-X-Communication

If hazard warnings are available these can be shown as symbols on the map. The display depends on the settings for the Traffic and Traffic incidents options.

- Set the options.
  If Traffic is switched off and Traffic incidents is switched on, the symbols are shown on the prospective route.

Displaying weather information and other map contents

- Select ☼.
- Select Advanced.
- Select View.
- Select Map elements.
- Scroll up and show the ONLINE MAP CONTENTS category.
- Switch on a service, e.g. Weather.
  Current weather information is displayed on the navigation map, e.g. temperature or cloud cover.

Telephone

Telephony

Notes on telephony

WARNING Risk of distraction from operating integrated communication equipment while the vehicle is in motion

If you operate communication equipment integrated in the vehicle when driving, you will be distracted from the traffic situation. This could also cause you to lose control of the vehicle.

- Only operate this equipment when the traffic situation permits.
- If you cannot be sure of this, stop the vehicle whilst paying attention to road and traffic conditions and operate the equipment with the vehicle stationary.

WARNING Risk of an accident from operating mobile communication equipment while the vehicle is in motion

Mobile communications devices distract the driver from the traffic situation. This could also cause the driver to lose control of the vehicle.

- As the driver, only operate mobile communications devices when the vehicle is stationary.
- As a vehicle occupant, only use mobile communications devices in the areas intended for this purpose, e.g. in the rear passenger compartment.

You must observe the legal requirements for the country in which you are currently driving when operating mobile communication equipment in the vehicle.

WARNING Risk of injury due to objects being stowed incorrectly

If objects in the vehicle interior are stowed incorrectly, they can slide or be thrown around and hit vehicle occupants. In addition, cup holders, open stowage spaces and mobile phone receptacles cannot always retain all objects within.

There is a risk of injury, particularly in the event of sudden braking or a sudden change in direction.

- Always stow objects so that they cannot be thrown around in such situations.
- Always make sure that objects do not protrude from stowage spaces, luggage nets or stowage nets.
- Close the lockable stowage spaces before starting a journey.
- Always stow and secure heavy, hard, pointed, sharp-edged, fragile or bulky objects in the boot/load compartment.

Observe the additional information on stowing mobile communications devices correctly:

- Loading the vehicle (→ page 114)
- Stowing and securing the mobile phone (→ page 135)

Bluetooth® connection:

The menu view and the available functions in the telephone menu are in part dependent on the Bluetooth® profile of the connected mobile phone. Full functionality is only available if the mobile phone supports both of the following Bluetooth® profiles:

- PBAP (Phone Book Access Profile)
  - The contacts on the mobile phone are shown automatically on the multimedia system.
- MAP (Message Access Profile)
  - The mobile phone message functions can be used on the multimedia system.

Irrespective of this, Bluetooth® audio functionality can by used with any mobile radio unit.

For information on the range of functions of the mobile radio unit to be connected, see the manufacturer's operating instructions.

Network connection:

The following cases can lead to the call being disconnected while the vehicle is in motion:

- You switch into a transmission/reception station, in which no communication channel is free.
- The SIM card used is not compatible with the network available
- a mobile phone with "Twincard" is logged into the network with the second SIM card at the same time

The multimedia system supports calls in HD Voice® for improved speech quality. A requirement for this is that the mobile phone and the mobile phone network provider of the person you are calling support HD Voice® .

Depending on the quality of the connection, the voice quality may fluctuate.

Further information can be obtained from a Mercedes-Benz service centre or at: https://www.mercedes-benz.com/connect

Telephone menu overview

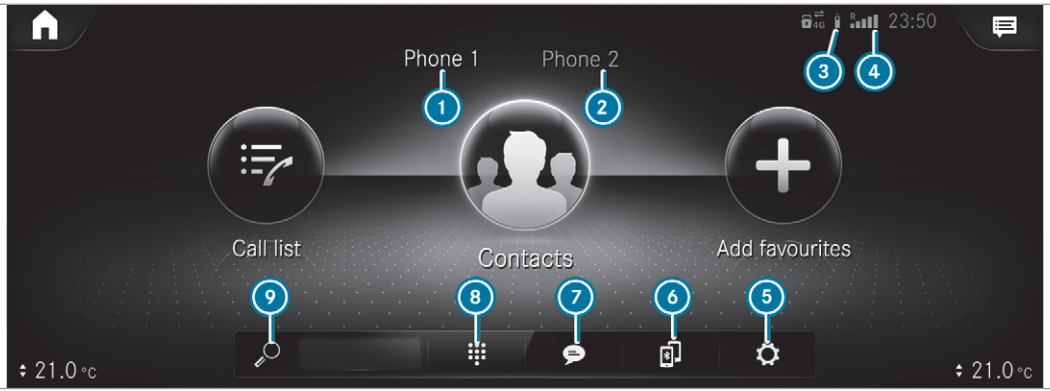

1. Bluetooth® device name of the currently connected mobile phone/of the mobile phone
2. Bluetooth® device name of the currently connected mobile phone/of the mobile phone (two phone mode)
3. Battery status of the connected mobile phone
4. Signal strength of the mobile phone network
5. Options
6. Device manager
7. Messages
8. Numerical pad
9. Contact search

Telephony operating modes overview

Depending on your equipment, the following telephony operating modes are available:

- A mobile phone is connected to the multimedia system via Bluetooth®.

- Two mobile phones are connected with the multimedia system via Bluetooth® (two phone mode).
  - You can use all the functions of the multimedia system with the mobile phone in the foreground.
  - You can receive incoming calls and messages with the mobile phone in the background.

    You can interchange the mobile phone in the foreground and background.

Connecting a mobile phone
Requirements:

- Bluetooth® is activated on the mobile phone (see the manufacturer's operating instructions).
- Bluetooth® is activated on the multimedia system.

Multimedia system:

→ ⌂ ›› Phone

Searching for a mobile phone

▶ Select 📱.

▶ Select Connect new device.

Connecting a mobile phone
Authorisation follows using secure simple pairing.

▶ Select a mobile phone.
A code is displayed in the multimedia system and on the mobile phone.

▶ If both codes match, confirm the code on the mobile phone.

Functions in the telephony menu
In the telephony menu you have the following functions, for example:

- Making calls, e.g.:
  - 📞 Accept a call
  - ☎ End call
  - 👥 Create conf. call
  - Accepting or rejecting a waiting call
- Managing contacts, e.g.:
  - Downloading mobile phone contacts
  - Editing the format of a contact's name
  - Saving a contact as a favourite
- Receiving and sending messages, e.g.:
  - Using the read-aloud function
  - Dictating a new message

Mercedes me and apps

Mercedes me connect

Information on Mercedes me connect

ⓘ Mercedes me connect or individual Mercedes me connect services are not available in every country. Find out at a Mercedes-Benz service centre if these functions are available in your country.

Mercedes me connect consists of multiple services.

You can use the following services via the multimedia system and the overhead control panel, for example:

- Accident and Breakdown Management (me button or situation-dependent display in the multimedia system)
- Mercedes-Benz emergency call system (automatic emergency call and SOS button)

The Mercedes me connect Accident and Breakdown Management and the Mercedes-Benz emergency call centre are available to you around the clock.

The me button and the SOS button can be found on the vehicle's overhead control panel (→ page 294).

You can also call the Mercedes-Benz Customer Centre using the multimedia system (→ page 295).

Please note that Mercedes me connect is a Mercedes-Benz service. In emergencies, first call the national emergency services using the standard national emergency service telephone numbers. In emergencies, you can also use the Mercedes-Benz emergency call system (→ page 303).

Observe the conditions of use for Mercedes me connect and other services. These can be obtained in the Mercedes me Portal: https://me.secure.mercedes-benz.com

Further information about Mercedes me connect, the provided service scope and operation: https://moba.i.daimler.com/markets/ece-row/baix/cars/connectme/en_GB/#emotions/Startseite.html

Information on Mercedes me connect Accident and Breakdown Management

The Accident and Breakdown Management can include the following functions:

- Supplement to the Mercedes-Benz emergency call system (→ page 303)

  If necessary, the contact person at the Mercedes-Benz emergency call centre forwards the call to Mercedes me connect Accident and Breakdown Management. Forwarding the call is however not possible in all countries.

- Breakdown assistance by a technician on location and/or the towing away of the vehicle to the nearest Mercedes-Benz service centre

  You may be charged for these services.

- Addition to the emergency guide after automatic accident or breakdown detection (→ page 295)

  In the event of a breakdown or accident, further vehicle data is sent which enables optimal support by the Mercedes-Benz Customer Centre and the authorised service partner or breakdown assistance.

- Addition to the Mercedes me connect service Telediagnostics

  With the Telediagnostics function, specific wear and failure reports are recorded by the service provider, in so far as these can be clearly interpreted and are available through the monitoring of components that are subject to diagnostics.

  If your vehicle detects a breakdown or threat of a breakdown, you may be prompted via the multimedia system to contact the

Mercedes-Benz Customer Centre for further help. This prompt in the multimedia system only appears when the vehicle is stationary.

ⓘ These services are subject to technical restrictions such as the mobile phone coverage, mobile network quality and the ability of the processing systems to interpret the transferred data. In some circumstances, this can result in delays or the failure of the information to appear in the multimedia system.

More information about Mercedes me connect services can be obtained in the Mercedes me Portal: https://me.secure.mercedes-benz.com

Data transferred during Mercedes me connect call services

The data transferred during a Mercedes me connect call depends on:

- The reason for initiation of the call
- The service that is selected in the voice control system
- The activated Mercedes me connect services

Which data is transferred for the services can be taken from the currently valid terms of use. These can be obtained in the Mercedes me portal: https://me.secure.mercedes-benz.com

Mercedes me calls

Making a call via the overhead control panel

ⓘ Mercedes me calls are not possible in every country. Find out at a Mercedes-Benz service centre if these functions are available in your country.

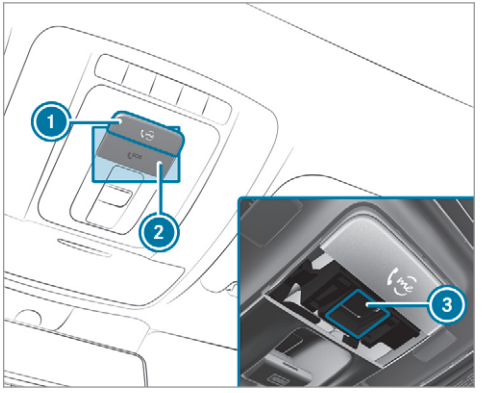

1 me button for service or information calls
2 SOS button cover
3 SOS button (emergency call system)

▶ **To make a Mercedes me call:** press me button 1.

▶ **To make an emergency call:** press SOS button cover 2 briefly to open.

▶ Press and hold SOS button ③ for at least one second.

If a Mercedes me call is active, an emergency call can still be triggered. This has priority over all other active calls.

Information about the Mercedes me call using the me button

A call to the Mercedes-Benz Customer Centre has been initiated via the me button in the overhead control panel or the multimedia system (→ page 294).

Using the voice dialogue system you access the desired service:

- Accident and Breakdown Management
- Mercedes-Benz Customer Centre for general information about the vehicle

You can find information on the following topics:

- Activation of Mercedes me connect
- Operating the vehicle
- Nearest Mercedes-Benz service centre
- Other products and services from Mercedes-Benz

Data is transferred during the connection to the Mercedes-Benz Customer Centre (→ page 297).

Calling the Mercedes-Benz Customer Centre using the multimedia system

Requirements:

- Access to a GSM network is available.
- The contract partner's GSM network coverage is available in the respective region.
- The ignition must be switched on so that vehicle data can be transferred automatically.

Multimedia system:

↳ ⌂ ▸▸ Phone ▸▸ 👥

▶ Call Mercedes me connect.
After confirmation, the multimedia system sends the required vehicle data. The data transfer is shown in the media display.

Then, you can select a service and be connected to a specialist at the Mercedes-Benz Customer Centre.

Calling the Mercedes-Benz Customer Centre after automatic accident or breakdown detection

Requirements:

- The vehicle has detected an accident or breakdown situation.
- The vehicle is stationary.
- The hazard warning lights are switched on.

ⓘ This function is not available in all countries.

The vehicle can detect accident or breakdown situations under certain circumstances.

In the event an accident or breakdown is detected, the emergency guide shows safety notes in the multimedia system display.

After quitting the emergency guide display on the multimedia system, a prompt appears asking whether you wish to get support from the Mercedes-Benz Customer Centre.

▶ Select Call.
- After your agreement, or if the Mercedes me connect service "Accident and Breakdown Management" is active, the vehicle

data is transferred automatically (→ page 293).

- The Mercedes-Benz Customer Centre takes your call and organises the breakdown and accident assistance.

You may be charged for these services.

ⓘ Depending on the severity of the accident, an automatic emergency call can be initiated. This has priority over all other active calls.

ⓘ In addition, if the Mercedes me connect service "Telediagnostics" is active, a similar prompt can appear after a delay in the event of a breakdown. If you are already in contact with the Mercedes-Benz Customer Centre or have already received support, this prompt can be ignored or declined.

ⓘ If you answer the prompt for support from the Mercedes-Benz Customer Centre with Later, the message will be hidden and appear again later.
The prompt triggered by the Mercedes me connect service "Telediagnostics", can either be confirmed or declined. After being declined, this will not be shown again.

Arranging a service appointment via a Mercedes me call

If you have activated the maintenance management service, relevant vehicle data is transferred automatically to the Mercedes-Benz Customer Centre. You will then receive individual recommendations regarding the maintenance of your vehicle.

Regardless of whether you have consented to the maintenance management service, the multimedia system reminds you after a certain amount of time that a service is due. A prompt appears asking if you would like to make an appointment.

▶ **To arrange a service appointment:** select Call.
After your agreement, the vehicle data is transferred and the Mercedes-Benz customer centre takes your preferred appointment date. The information is then sent to your desired service outlet.
This will contact you to confirm the appointment and if necessary consult about the details.

ⓘ If you select Later after the service message appears, the message is hidden and reappears at a later time.

Giving consent to data transfer during a Mercedes me call
Requirements:

- There is an active Mercedes me call via the multimedia system or the me button in the overhead control panel (→ page 294).

ⓘ The prompt to confirm data transfer does not appear in all countries.

If the Accident and Breakdown Management services are not activated on Mercedes me, the Do you want to transmit vehicle data and the vehicle's position to the Mercedes-Benz Customer Centre in order to improve the processing of your request? message is shown.

▶ Select Yes.
Relevant identification data is transmitted automatically.

More information on Mercedes me: https://www.mercedes.me

Transferred data during a Mercedes me call

If you initiate a service call using Mercedes me, data is transferred to enable targeted advice and an efficient service.

The following requirements must be fulfilled for the transfer of the data:

- The ignition is switched on.
- The required data transfer technology is supported by the mobile service operator.
- The quality of the mobile connection is sufficient.

Multi-stage transfer depends on the following factors:

- Reason for the initiation of the call
- The available mobile phone transmission technology.
- The activated Mercedes me connect services.
- The service selected in the voice control system.

ⓘ A prompt for consent to the data transmission only occurs if the corresponding Mercedes me connect service is not activated.

Data transfer if Mercedes me connect services are not activated

If no Mercedes me connect services are activated and the data protection prompt has been confirmed the following data is transmitted:

- Vehicle identification number
- Time of the call
- Reason for the initiation of the call
- Confirmation of the data protection prompt
- Country indicator of the vehicle
- Set language for the multimedia system
- Telephone number of the communication platform installed in the vehicle

If a call is made for a service appointment via the service reminder, the following data is also transmitted:

- Current mileage and maintenance data

If a call is made after automatic accident or breakdown detection using the multimedia system, the following data is also transmitted:

- Current mileage and maintenance data
- Current vehicle location

If Accident and Breakdown Management is called via the voice control system and no service has been activated, but the data protection query has been confirmed, the following data can also be called up from the vehicle by the Mercedes-Benz Customer Centre:

- Current vehicle location

If the data protection prompt has been rejected, the following data is transmitted to enable targeted advice and an efficient service:

- Reason for the initiation of the call
- Rejection of the data protection prompt
- Country indicator of the vehicle
- Set language for the multimedia system
- Telephone number of the communication platform installed in the vehicle

Data transfer if Mercedes me connect services are activated
Only if the respective service is activated will additional incident-specific data be transmitted in the second stage to enable an optimal service.

An overview of the data transmitted can be found in the respective terms of use for Mercedes me connect services. These can be obtained in the Mercedes me Portal: https://me.secure.mercedes-benz.com

Data processing
The data transmitted within the scope of the call is deleted from the processing system after the call is finished, in so far as this data is not being used for other activated Mercedes me connect services.

The incident-specific data is processed and stored in the Mercedes-Benz Customer Centre and, if required to process the incident, forwarded to the service partner authorised by the Mercedes-Benz Customer Centre. Please take note of the data protection information on the Mercedes me Internet page at https://www.mercedes.me or in the recorded message immediately after calling the Mercedes-Benz Customer Centre.

ⓘ The recorded message is not available in every country.

Overview of the Mercedes me & Apps menu

When you log in with a user account to the Mercedes me Portal, then services and offers from Mercedes-Benz will be available to you.

For more information consult a Mercedes-Benz service centre or visit the Mercedes me portal: https://me.secure.mercedes-benz.com

ⓘ Make sure you always keep the Mercedes me apps updated.

You can call up the menu using Mercedes me & Apps in the multimedia system.

In the Mercedes me & Apps menu, the following options can be available:

- Connecting the vehicle with the Mercedes me user account
- Deleting a connection between a Mercedes me user account and the vehicle
- Calling up the Mercedes me services
- Calling up apps such as, In-Car Office or the web browser depending on availability

In-Car Office

Using In-Car Office, you can connect your online services with the multimedia system.

Requirements for In-Car Office:

- Your mobile phone is connected with the multimedia system.
- You have a user account in the Mercedes me Portal.
- The In-Car Office service is activated in the Mercedes me Portal.
- You have a user account with an online service, e.g. Office 365, and have connected the online service with your user account in the Mercedes me Portal.

In-Car Office functions:

- Displaying pending appointments in the calendar
  - Reading out calendar entries
  - Calling (requirement being that a telephone number is saved)
  - Navigating to appointments (requirement being that the appointment contains a navigable destination)
  - Deleting a calendar entry
- Displaying and selecting Tasks & Calls to be dealt with
  - Reading aloud
  - Calling (requirement being that a telephone number is saved.)
  - Deleting
- Marking an entry as completed in Tasks & Calls ☑
- Managing e-mails
  - Showing/reading e-mails
  - Writing and forwarding e-mails

ⓘ You can start the In-Car Office function using the Mercedes me & Apps menu. Please note that certain functions are only available when the vehicle is stationary.

Web browser overview

You can call up websites with the web browser. The web browser is started using the Mercedes me & Apps menu.

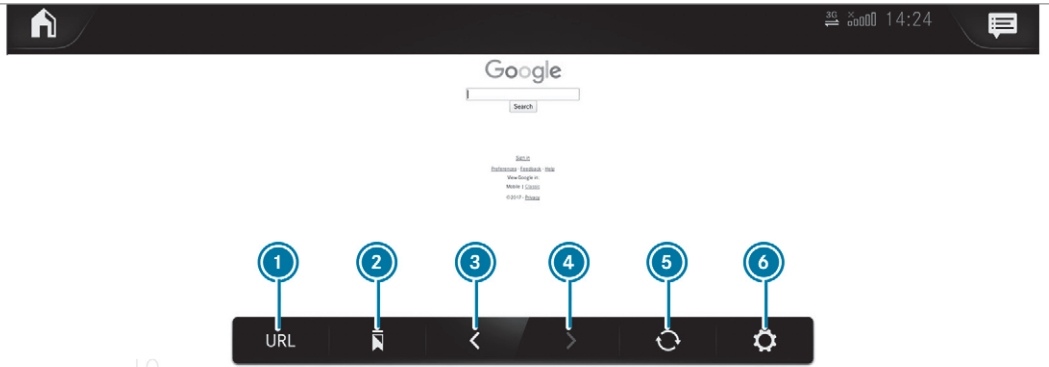

1. URL entry
2. Bookmarks
3. Web page, back
4. Web page, forwards
5. To refresh/stop
6. Options

Websites cannot be shown while the vehicle is in motion.

Smartphone integration

With Smartphone Integration, you can use certain functions on your mobile phone via the multimedia system display.

Only one mobile phone at a time can be connected via Smartphone Integration to the multimedia system. Also for use with two phone mode with smartphone integration, only one additional mobile phone can be connected using Bluetooth® with the multimedia system.

The full range of functions for Smartphone Integration is only possible with an Internet connection. The appropriate application must be downloaded on the mobile phone to use Smartphone Integration. The mobile phone must be switched on and connected to a USB port with the symbol on the multimedia system using a suitable cable.

Apps for Smartphone Integration

- Mercedes-Benz Link (implementation of the function using the Mercedes-Benz Link control box)
- Apple CarPlay®
- Android Auto

You can start Smartphone Integration using the Mercedes me & Apps menu.

You can end Smartphone Integration by disconnecting the connecting cable between the mobile phone and multimedia system.

Overview of transferred vehicle data

When using Smartphone Integration, certain vehicle data is transferred to the mobile phone. This enables you to get the best out of selected mobile phone services. Vehicle data is not directly accessible.

The following system information is transmitted:

- Software release of the multimedia system
- System ID (anonymised)

The transfer of this data is used to alter how content is displayed to correspond to the driving situation.

The following position data is transmitted:

- Coordinates
- Speed
- Compass direction
- Acceleration direction

This data is used by the mobile phone to improve the accuracy of the navigation (e.g. for continuation in a tunnel).

Mercedes-Benz emergency call system

Information on available emergency call systems

Two types of emergency call system are available to you in the vehicle:

- Mercedes-Benz emergency call system
- 112 emergency call system (EU eCall)

The Mercedes-Benz emergency call system is not available in all countries. You can find more information on the regional availability of eCall at: https://www.mercedes-benz-mobile.com/extra/ecall/

The following applies for both emergency call systems:

- The transfer of specific data is required for the intended function of both emergency call systems. This will be explained in the "Data transfer" section (→ page 304).
- Both emergency call systems are included as standard equipment in your vehicle and are activated at the factory.
- The use of both emergency call systems is exempt from charges.
- Both emergency call systems only function in areas in which the mobile phone network providers offer mobile phone coverage.

  For both systems, insufficient network coverage from the mobile phone network providers can result in an emergency call not being transmitted.

Differences between the Mercedes-Benz emergency call system and 112 emergency call system (EU eCall)

Mercedes-Benz emergency call system	112 emergency call system (EU eCall)
• The Mercedes-Benz emergency call system is permanently logged in to the mobile phone network. • Automatic and manual Mercedes-Benz emergency calls are transmitted to a Mercedes-Benz emergency call centre. In the event that the emergency call centre of the Mercedes-Benz emergency call system cannot be reached (e.g. due to a lack of network coverage), the 112 emergency call is carried out automatically.	• If you decide on the 112 emergency call system (EU eCall), then the system only logs in to the mobile phone network after the triggering of a manual or automatic emergency call. • The 112 emergency call system (EU eCall) transmits automatic and manual emergency calls directly to public coordination centres.

ⓘ The 112 emergency call system (EU eCall) in your vehicle meets the delegated regulation EU 2017/79. Proper and full functionality of the 112 emergency call system (EU eCall) depends on circumstances beyond the influence of Mercedes-Benz AG. This includes mobile network coverage and the technical infrastructure of the public reception centres in the respective countries.

ⓘ Please observe that in the event of a repair genuine Mercedes-Benz batteries must be used which have been certified pursuant to the delegated regulation EU 2017/79 (Appendix I). Other manufacturers are also permitted provided their batteries are certified according to the delegated regulation EU 2017/79.

There is the option of deactivating the Mercedes-Benz emergency call system and using only the 112 emergency call system (EU eCall). Contact address for carrying out deactivation of the Mercedes-Benz emergency call system are the local dealers.

Mercedes-Benz recommends the activation of the Mercedes-Benz emergency call system for the following reasons:

- In emergency situations when abroad, you can also get support in a language you speak.
- Several transmission technologies are used to accelerate the transfer of the accident data and improve reliability of the transmission.
- The Mercedes-Benz emergency call system is permanently logged in to the mobile phone

network, which ensures faster placement of the emergency call and faster transfer of the accident data.

Measures for rescue, recovery or towing away can then be initiated in quickly.

- With a Mercedes-Benz emergency call, the accident data is only transferred to the public coordination centre with the approval of the customer.

  In the event of an automatically triggered emergency call in which there is no voice contact, the accident data is transmitted immediately to the public emergency call centre.
- Should the Mercedes-Benz emergency call centre not be available, the 112 emergency call is carried out automatically.

Overview of emergency call systems

Both the Mercedes-Benz emergency call system as well as the 112 emergency call system (EU eCall) can help to reduce the time between an accident and the arrival of emergency services at the site of the accident. They help locate an accident site in places that are difficult to access.

Both emergency call systems can initiate an emergency call automatically (→ page 303) or manually .

Only make emergency calls if you or others are in need of rescue. Do not make an emergency call in the event of a breakdown or a similar situation.

Messages on the display

The following messages appear in the display of both emergency call systems:

- SOS NOT READY: the ignition is not on or eCall is not available. This does not necessarily indicate complete failure of the emergency call system. Emergency calls call still be transmitted.

  The display only refers to the vehicle and does not take account of the availability of mobile phone networks and the Mercedes-Benz emergency call centre.

  The functional readiness of the emergency call system on the vehicle can be seen when the SOS NOT READY display disappears once the ignition is switched on.
- SOS: The icon appears in the display during an active emergency call.

ⓘ If there is a malfunction in the emergency call system (e.g. a fault with the speaker, microphone, airbag, SOS button), a corresponding message appears in the multifunction display of the instrument cluster.

Triggering an automatic emergency call

Requirements:

- The ignition is switched on.
- The starter battery is sufficiently charged.

Both the Mercedes-Benz emergency call system as well as the 112 emergency call system (EU eCall) automatically initiate an emergency call in the following situations:

- After activation of the restraint systems such as airbags or seat belt tensioners after an accident.
- After an automatically initiated emergency stop by Active Emergency Stop Assist.

The emergency call has been made:

- A voice connection is established with the emergency call centre.
- A message with accident data is transmitted to the emergency call centre.

The SOS button in the overhead control panel flashes until the emergency call is finished.

If no connection can be made to the public emergency services, a corresponding message appears in the display.

▶ Dial the **112** emergency number or an appropriate local emergency call number on your mobile phone.

If an emergency call has been initiated:

- Remain in the vehicle if the road and traffic conditions permit you to do so until a voice connection is established with the emergency call centre.
- On the basis of the call, the emergency call centre decides whether it is necessary to call rescue teams and/or the police to the accident site.
- If no vehicle occupant answers, an ambulance is sent to the vehicle immediately.

Triggering a manual emergency call

▶ **To use the SOS button in the overhead control panel:** press the SOS button at least one second long (→ page 294).

▶ **To use voice control:** use the LINGUATRONIC voice commands.

The emergency call has been made:

- A voice connection is established with an emergency call centre.
- Remain in the vehicle if the road and traffic conditions permit you to do so until a voice connection is established with the emergency call centre.
- On the basis of the call, the emergency call centre decides whether it is necessary to call rescue teams and the police to the accident site.
- A message with accident data is transmitted to the emergency call centre.

If no connection can be made to the public emergency services, a corresponding message appears in the media display.

▶ Dial the **112** emergency number or an appropriate local emergency call number on your mobile phone.

Emergency call system data transmission

For both the Mercedes-Benz emergency call system as well as the 112 emergency call system (EU eCall) data is transferred to the Mercedes-Benz emergency call centre or the public emergency services call centre.

Depending on the emergency call system (→ page 301) activated different data is transmitted to the appropriate emergency call centre.

Transmitted data according to activated emergency call system:

Mercedes-Benz emergency call	112 emergency call
• Vehicle's GPS position data • GPS position data on the route (a few hundred metres before the accident) • Direction of travel • Vehicle identification number • Drive type of the vehicle (e.g. petrol, CNG, LPG, electric or hydrogen) • Number of people determined to be in the vehicle • Whether the emergency call was initiated manually or automatically • Time of the accident • Language setting on the multimedia system • Whether Mercedes me connect is available or not This is a requirement for the option of forwarding the call to the Mercedes-Benz Customer Centre if necessary.	• Vehicle's GPS position data • GPS position data on the route (a few hundred metres before the accident) • Direction of travel • Vehicle identification number • Drive type of the vehicle (e.g. petrol, CNG, LPG, electric or hydrogen) • Number of people determined to be in the vehicle • Whether the emergency call was initiated manually or automatically • Time of the accident

ⓘ If only the 112 emergency call system (EU eCall) is activated in the vehicle, the accident data is transmitted directly to the public emergency call centre.

For accident clarification purposes, the following measures can be taken up to an hour after the emergency call has been initiated:

- The current vehicle position can be determined.
- A voice connection to the vehicle occupants can be established.
- Emergency call data can be called up.

ⓘ For Russia: various functions, e.g. receiving traffic information, cannot be performed for up to two hours after sending an emergency call.

Function of the emergency call system self-diagnosis (Russia)

Your car verifies the operability of the emergency call system each time the ignition is ON. In case of system failure, you will be informed with text message on the instrument cluster and with red indicator SOS NOT READY on the display.

Please, make sure, that during 30 seconds after switching ignition ON the red indicator SOS NOT READY in the upper right corner of display is switched OFF, this means the emergency call system passed diagnostics successfully.

Starting/ending ERA-GLONASS test mode (Russia)

Requirements:

- The starter battery is sufficiently charged.
- The ignition is switched on.
- The vehicle has been stationary for at least one minute.

▶ **To start the test mode:** press and hold the button on the multifunction steering wheel for at least five seconds.
The test mode is started and automatically ends after the language test has been performed.

▶ **To end the test mode manually:** switch off the ignition.
The test mode is ended.

Information on data processing

Processing of personal data via the Mercedes-Benz emergency call system

All processing of personal data via the Mercedes-Benz emergency call system corresponds with the specifications in the EU Regulation 2016/679 "on the protection of individuals with regard to the processing of personal data (GDPR)".

The data is solely used by the Mercedes-Benz emergency call system for rescue and recovery in the event of an accident.

The owner of a vehicle, that is equipped with a Mercedes-Benz emergency call system in addition to the 112 emergency call system (EU eCall), has the right to use the 112 emergency call system instead of the Mercedes-Benz emergency call system.

Contact address for carrying out deactivation of the Mercedes-Benz emergency call system are the local dealers.

Processing of personal data via the 112 emergency call system (EU eCall)
All processing of personal data via the 112 emergency call system (EU eCall) corresponds with the specifications in the EU Regulation 2016/679 "on the protection of individuals with regard to the processing of personal data (GDPR)" and is based particularly on the necessity of upholding the vital interests of the affected person in accordance with Article 6, Clause 1, Letter d of the GDPR.

The processing of this type of data is strictly limited to the purpose of operating the emergency calls to the standard European emergency call number 112.

Data recipient
The recipients of data that is processed using the 112 emergency call system (EU eCall) are the relevant emergency call inquiry terminals that are specified to first receive and handle emergency calls to the standard European emergency call number 112 by the respective country authorities in whose territory you are located.

Arrangements for data processing

Both emergency call systems are designed so that the following requirements are fulfilled:

- The data contained in the system memory is not accessible outside the system prior to the initiation of an emergency call.
- Both emergency call systems cannot be traced and there is no continuous tracking in normal operation.
- The data in the system's internal memory is automatically and continuously deleted.
- The location data of the vehicle is continuously overwritten in the system's internal memory, so that no more than the last three current locations required for the normal function of the system are available.
- The record of the activity data of both emergency call systems is only kept for as long as is required to fulfil the purpose of handling the emergency call, and under no circumstances for more than 13 hours after the time that an emergency call is initiated.

Rights of persons affected by the data processing
The person affected by the data processing (the vehicle owner) has the right to access the data and if applicable can demand the correction, deletion or barring of data that affects him or her and that the processing of which does not correspond with the GDPR regulations. Each correction, deletion or barring carried out according to this regulation must be shared with the third party to which the data has been transmitted, provided this does not prove to be infeasible and does not incur disproportionate expenditure.

The person affected by the data processing has the right to complain to the appropriate data protection authority should they be of the opinion that their rights have been infringed by the processing of their personal data.

Responsible contact point for the processing of access rights: Konzernbeauftragter für den Datenschutz, Daimler AG, HPC G353, D-70546 Stuttgart, Germany

Radio & media

Overview of the symbols and functions in the media menu

Symbol	Designation	Function
	Play	Select to start or continue playback.
	Rest	Select to pause the playback.
	Repeating a track	Select to repeat the current track or the active playlist. • Select once: the active playlist is repeated. • Select twice: the current track is repeated. • Select three times: the function is deactivated.
	Random playback	Select to play back tracks in random order.
	Skip forwards/back	Select to skip to the next or to the previous track.
	Options	Select to show additional options.
	Categories	Select to show or search through available categories (e.g. playback lists, albums, artists, etc.).
	Search	Select to search in the active menu. You can search for artists, genres, moods or videos, for example.

Symbol	Designation	Function
	Settings	Select to make settings.
	Home	Select to return to the home screen.
	Messaging	Select to call up messaging.
	Full screen	Select to switch to full screen mode

The following functions and settings are available in the media menu:

- Connecting external data storage media with the multimedia system (e.g. using USB or Bluetooth®)
- Playing back audio or video files
- Streaming music online

Authorising a Bluetooth® audio device for media playback

Requirements:

- Bluetooth® is activated on the multimedia system and audio equipment.
- The audio equipment supports the Bluetooth® audio profiles A2DP and AVRCP.
- The audio equipment is "visible" for other devices.

Multimedia system:

Media ▸▸ Bluetooth ▸▸

With Bluetooth® audio, you can play back music files from an external data storage medium, e.g. your smartphone, using the MBUX multimedia system.

▶ To play back audio files using the multimedia system, authorise the external data storage medium on the MBUX multimedia system.

Authorising a new Bluetooth® audio device

▶ Select Connect new device.

▶ Select an audio device.
Authorisation starts. A code is displayed on the multimedia system and on the mobile phone.

▶ If the codes are identical, confirm on the audio equipment.

▶ Select Only as Bluetooth audio device.
The Bluetooth® audio equipment is connected with the multimedia system.

Connecting previously authorised Bluetooth® audio equipment

▶ Select a Bluetooth® audio device from the list.
The connection is being established.

Overview of the symbols and functions in the radio menu

Symbol	Designation	Function
	Home	Select to return to the home screen.
	Messaging	Select to call up messaging.
	Skip forwards/back	Select to skip to the next or to the previous station.

Symbol	Designation	Function
	Options	Select to have further options shown. Settings can be made to the following additional functions, for example: • Navigation and traffic announcements • Frequency Fix function • Radio additional text • Emergency warnings The setting options are country-dependent.
	Full screen	Select to switch to the DAB slide show This function is not available in all countries.
	Mute function	Select to switch off the sound
	Storing radio stations	Select to save a station in the presets
	Station list	Select to have the station list shown.
	Search	Select to search in the active menu. You can search for artists, genres, moods or videos, for example.

Additional functions of TuneIn Radio

ⓘ A relatively large volume of data can be transmitted when using TuneIn Radio.

Symbol	Designation	Function
	Options	The following additional settings are available in the TuneIn Radio menu: • Selecting stream • Logging on to/out of the TuneIn account
	Favourites	Select during playback to save the station currently set as a favourite.
	Play/Stop	Select to start, stop or continue playback.
	Browse	Select to choose a category and then a radio station.

Depending on the frequency band selected, different functions are available to you.

Select the desired frequency band in the radio menu head runner.

Calling up TuneIn Radio

Requirements:

- A Mercedes me account is available.
- The vehicle is connected with the Mercedes me account.
- The TuneIn Radio service is activated in the Mercedes me portal.
- The data volume is available.

Depending on the country, data volume may need to be purchased.

- A fast Internet connection for data transmission free of interference.

ⓘ New data volume can be purchased **directly from a mobile phone network provider** via the Mercedes me Portal.

ⓘ The functions and services are country-dependent. For more information, consult a Mercedes-Benz service centre.

Multimedia system:

→ ⌂ » Radio

▶ Select TuneIn Radio.
The TuneIn menu appears. The last station set starts playing.

ⓘ The connection quality depends on the local mobile phone reception.

Sound settings

Overview of functions in the sound menu

The setting options and functions available depend on the sound system fitted. You can find out which sound system is fitted in your vehicle in the Digital Owner's Manual.

Standard sound system and Advanced sound system

The following functions are available:

- Equaliser
  - Treble, mid-range and bass
- Balance and fader
- Volume
  - Automatic adjustment

Burmester® surround sound system and Burmester® high-end 3D surround sound system

The following functions are available:

- Equaliser
  - Treble, mid-range and bass
- Balance and fader
- Sound focus
- VIP seats (Burmester® high-end 3D surround sound system)
- Sound profiles
- Volume
  - Automatic adjustment

ASSYST PLUS service interval display

Function of the ASSYST PLUS service interval display

The ASSYST PLUS service interval display on the instrument display provides information on the remaining time or distance before the next service due date.

You can hide this service display using the back button on the left-hand side of the steering wheel.

Depending on how the vehicle is used, the ASSYST PLUS service interval display may shorten the service interval, e.g. in the following cases:

- mainly short-distance driving
- when the engine is often left idling for long periods
- in the event of frequent cold start phases
- **vehicles with a diesel particulate filter:** in the event of frequently interrupted regeneration of the diesel particulate filter

Mercedes-Benz recommends avoiding such operating conditions.

You can obtain information concerning the servicing of your vehicle from a qualified specialist workshop, e.g. a Mercedes-Benz Service Centre.

Displaying the service due date

On-board computer:

↳ Service ⏩ ASSYST PLUS

The next service due date is displayed.

▶ **To exit the display:** press the back button on the left-hand side of the steering wheel.

Bear in mind the following related topic:

- Operating the on-board computer (→ page 266).

Information on regular maintenance work

NOTE Premature wear through failure to observe service due dates

Service work which is not carried out at the right time or incompletely can lead to increased wear and damage to the vehicle.

▶ Always observe the prescribed service intervals.

▶ Always have the prescribed service work carried out at a qualified specialist workshop.

Special service requirements

The prescribed service interval is based on normal operation of the vehicle. Maintenance work will need to be performed more often if the vehicle is operated under arduous conditions or increased loads.

The ASSYST PLUS service interval display is only an aid. The driver of the vehicle bears responsibility as regards to whether maintenance work needs to be performed more often than speci-

fied based on the actual operating conditions and/or loads.

Examples of arduous operating conditions:

- regular city driving with frequent intermediate stops
- mainly short-distance driving
- frequent operation in mountainous terrain or on poor road surfaces
- when the engine is often left idling for long periods
- operation in particularly dusty conditions and/or if air-recirculation mode is frequently used

In these or similar operating conditions, have the interior air filter, engine air cleaner, engine oil and oil filter etc. changed more frequently. The tyres must be checked more frequently if the vehicle is operated under increased loads. Further information can be obtained at a qualified specialist workshop.

Battery disconnection periods

The ASSYST PLUS service interval display can only calculate the service due date when the battery is connected.

▶ Note down the service due date displayed on the instrument display before disconnecting the battery (→ page 314).

Engine compartment

Active bonnet (pedestrian protection)

Operation of the active bonnet (pedestrian protection)

In certain accident situations, the risk of injury to pedestrians can be reduced by the actuation of the active bonnet. The rear area of the engine bonnet is raised by approximately 70 mm.

For the drive to the workshop, reset the triggered active bonnet yourself (→ page 315).

After the active bonnet has been triggered, pedestrian protection may be limited.

A qualified specialist workshop must re-instate the full functionality of the active bonnet.

Resetting the active bonnet

⚠ **WARNING** Risk of burns from hot component parts in the engine compartment

Certain components in the engine compartment can be very hot, e.g. the engine, the radiator and parts of the exhaust system.

▶ Allow the engine to cool down and only touch component parts described in the following.

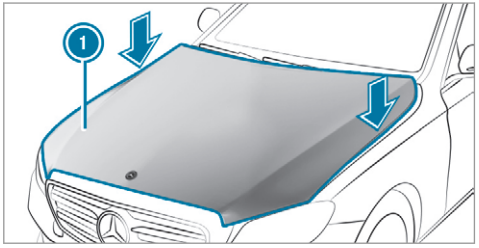

- With your hand flat, push down active bonnet (1) in the area around the hinges on both sides (arrows).
  In doing so, the actuator is depressurised and you may hear a hissing sound.
  The engine bonnet must engage in position.
- If active bonnet (1) can be raised slightly at the rear in the area of the hinges, repeat the step until it engages correctly.

Opening/closing the bonnet

WARNING Risk of accident due to driving with the bonnet unlocked

The bonnet may open and block your view.

- Never release the bonnet when driving.
- Before every trip, ensure that the engine bonnet is locked.

WARNING Risk of accident and injury when opening and closing the bonnet

The bonnet may suddenly drop into the end position.

There is a risk of injury for anyone in the bonnet's range of movement.

- Open or close the bonnet only when there is nobody in the bonnet's range of movement.

WARNING Danger of burns when opening the bonnet

If you open the engine bonnet when the engine has overheated or during a fire in the engine compartment, you could come into contact with hot gases or other escaping operating fluids.

- Before opening the bonnet, allow the engine to cool down.
- In the event of a fire in the engine compartment, keep the engine bonnet closed and call the fire service.

WARNING Risk of injury due to moving parts

Components in the engine compartment may continue running or start up suddenly, even if the ignition is switched off.

Make sure of the following before performing tasks in the engine compartment:

- Switch the ignition off.
- Never reach into the danger zone surrounding moving components, e.g. the rotation area of the fan.
- Remove jewellery and watches.
- Keep items of clothing and hair away from moving parts.

WARNING Risk of injury from touching components under voltage

The ignition system and the fuel injection system work under high voltage. You could receive an electric shock.

- Never touch components of the ignition system or the fuel injection system when the ignition is switched on.

⚠ WARNING Risk of burns from hot component parts in the engine compartment

Certain components in the engine compartment can be very hot, e.g. the engine, the radiator and parts of the exhaust system.

- Allow the engine to cool down and only touch component parts described in the following.

⚠ WARNING Risk of injury from using the windscreen wipers while the engine bonnet is open

When the engine bonnet is open, and the windscreen wipers are set in motion, you can be trapped by the wiper linkage.

- Always switch off the windscreen wipers and ignition before opening the engine bonnet.

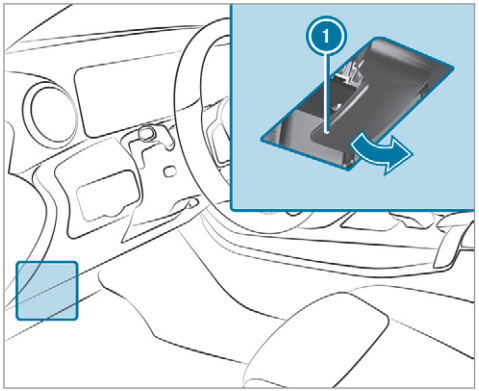

- **To open:** pull lever (1) to release the bonnet.

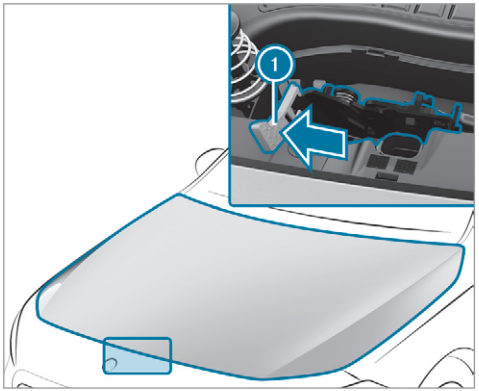

- Push yellow handle (1) on the bonnet catch to the left as far as it will go (palm downwards). Lift the bonnet until it is automatically raised by the pneumatic spring.
- **To close:** lower the bonnet and let it fall from a height of approximately 20 cm.
- If the bonnet can still be lifted slightly, open the bonnet again and close it with a little force until it engages correctly.

Engine oil

Checking the engine oil level using the on-board computer
Requirements:

- The engine has been warmed up.
- The vehicle is parked on a level surface.
- The engine is running at idle speed.

The engine oil level is determined during driving. Determining the engine oil level can take up to 30 minutes with a normal driving style and even longer with an active driving style.

On-board computer:

Service ›› Engine oil level

You will see one of the following messages on the multifunction display:

- Engine oil level Measuring now: measurement of the oil level is not yet possible.

▶ Repeat the request after a maximum of 30 minutes' driving.

- Engine oil level OK and the bar display for indicating the oil level on the multifunction display is green and is between "min" and "max": the oil level is correct.
- Engine oil level Add 1,0 l and the bar display for indicating the oil level on the multifunction display is orange and is below "min":

▶ Add 1 l of engine oil.

- Reduce engine oil level and the bar display for indicating the oil level on the multifunction display is orange and is above "max":

▶ Drain off any excess engine oil that has been added. To do so, consult a qualified specialist workshop.

- For engine oil level turn on ignition

▶ Switch on the ignition to check the engine oil level.

- Engine oil level System inoperative: The oil level sensor is defective or not connected.

▶ Consult a qualified specialist workshop.

- Engine oil level System currently unavail.

▶ Close the bonnet.

Topping up engine oil

WARNING Risk of burns from hot component parts in the engine compartment

Certain components in the engine compartment can be very hot, e.g. the engine, the radiator and parts of the exhaust system.

▶ Allow the engine to cool down and only touch component parts described in the following.

WARNING Risk of fire and injury from engine oil

If engine oil comes into contact with hot component parts in the engine compartment, it may ignite.

▶ Make sure that no engine oil is spilled next to the filler opening.

▶ Allow the engine to cool off and thoroughly clean the engine oil from component parts before starting the vehicle.

NOTE Engine damage caused by an incorrect oil filter, incorrect oil or additives

- Do not use engine oils or oil filters which do not correspond to the specifications explicitly prescribed for the service intervals.
- Do not alter the engine oil or oil filter in order to achieve longer change intervals than prescribed.
- Do not use additives.
- Follow the instructions in the service interval display regarding the oil change.

NOTE Damage caused by topping up too much engine oil

Too much engine oil can damage the engine or the catalytic converter.

- Have excess engine oil removed at a qualified specialist workshop.

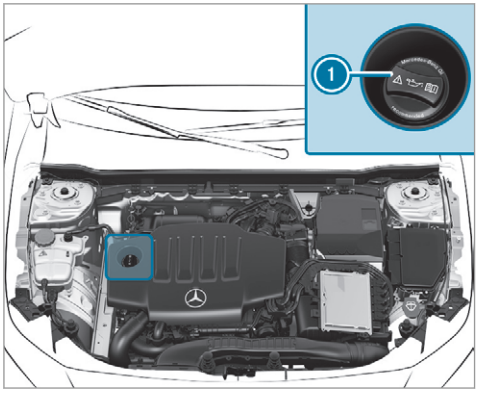

- Turn cap (1) anti-clockwise and remove it.
- Top up the engine oil.
- Replace cap (1) and turn it clockwise until it engages.
- Check the oil level again (→ page 318).

Checking the coolant level

WARNING Risk of burns from hot component parts in the engine compartment

Certain components in the engine compartment can be very hot, e.g. the engine, the radiator and parts of the exhaust system.

- Allow the engine to cool down and only touch component parts described in the following.

WARNING Risk of scalding from hot coolant

If you open the cap, you could be scalded.

- Let the motor cool down before opening the cap.
- When opening the cap, wear protective gloves and safety glasses.
- Open the cap slowly to release pressure.

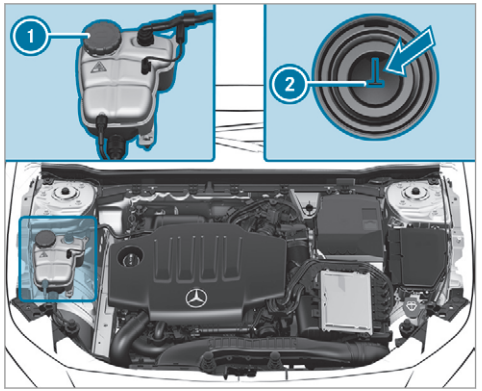

- Park the vehicle on a level surface.
- Check the coolant temperature display in the instrument cluster.
  The coolant temperature must be below 70 °C.
- Slowly turn cap (1) anti-clockwise to release overpressure.
- Continue turning cap (1) anti-clockwise and remove it.

The coolant level is correct in the following cases:

- if the engine is cold, the coolant is up to marker bar (2).
- if the engine is warm, the coolant is up to 1.5 cm over the marker bar (2).

- If necessary, top up with coolant that has been approved for Mercedes-Benz.
- Further information on coolant (→ page 379).

Topping up the windscreen washer system

WARNING Risk of burns from hot component parts in the engine compartment

Certain components in the engine compartment can be very hot, e.g. the engine, the radiator and parts of the exhaust system.

- Allow the engine to cool down and only touch component parts described in the following.

WARNING Danger of burns when opening the bonnet

If you open the engine bonnet when the engine has overheated or during a fire in the engine compartment, you could come into contact with hot gases or other escaping operating fluids.

- Before opening the bonnet, allow the engine to cool down.
- In the event of a fire in the engine compartment, keep the engine bonnet closed and call the fire service.

WARNING - Risk of fire and injury due to windscreen washer concentrate

Windscreen washer concentrate is highly flammable. It could ignite if it comes into contact with hot engine component parts or the exhaust system.

- Make sure that no windscreen washer concentrate spills out next to the filler opening.

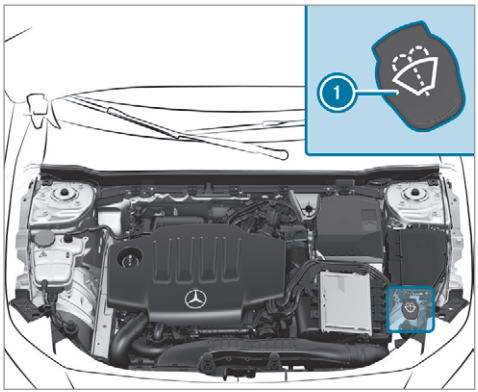

- Remove the cap (1) by the tab.
- Top up the washer fluid.

Keeping the air-water duct free

- Keep the area between the bonnet and the windscreen free of deposits, e.g. ice, snow and leaves.

Cleaning and care

Information on washing the vehicle in a car wash

WARNING Risk of an accident due to reduced braking power after washing the vehicle

Braking efficiency is reduced after washing the vehicle.

- After the vehicle has been washed, brake carefully while paying attention to the traffic conditions until braking power has been fully restored.

NOTE Damage from automatic braking

If one of the following functions is switched on, the vehicle brakes automatically in certain situations:

- Active Brake Assist
- Active Distance Assist DISTRONIC
- HOLD function
- Active Parking Assist

To avoid damage to the vehicle, deactivate these systems in the following or similar situations:

- During towing
- In a car wash

NOTE Damage due to unsuitable car wash

- Before driving into a car wash make sure that the car wash is suitable for the vehicle dimensions.

- ▶ Ensure there is sufficient ground clearance between the underbody and the guide rails of the car wash.
- ▶ Ensure that the clearance width of the car wash, in particular the width of the guide rails, is sufficient.

To avoid damage to your vehicle when using a car wash, ensure the following beforehand:

- Active Distance Assist DISTRONIC and the HOLD function are deactivated.
- the side windows and sliding sunroof are completely closed.
- the blower for the ventilation/heating is switched off.
- the windscreen wiper switch is in position 0.
- the key is at a minimum distance of 3 m away from the vehicle, otherwise the tailgate could open unintentionally.
- in car washes with a conveyor system: neutral N is engaged.

ⓘ In car washes with a conveyor system: if you would like to leave the vehicle while it is being washed, make sure the key is located in the vehicle. The park position P is otherwise automatically engaged.

ⓘ If, after the car wash, you remove the wax from the windscreen and wiper rubbers, this will prevent smearing and reduce wiper noise.

Automatic car wash mode

In car wash mode, the vehicle is prepared for driving into the automatic car wash. Car wash mode can be activated at a speed of up to 20 km/h (→ page 323).

The following settings are made when car wash mode is activated:

- the outside mirrors are folded in.
- the rain sensor is deactivated to prevent the windscreen washer system from starting up automatically.
- the rear window wiper is deactivated.
- the windows and the sliding sunroof are closed.
- the air conditioning system is set to air-recirculation mode.
- Parking Assist PARKTRONIC is deactivated.
- **Vehicles with 360° Camera:** the front image is activated after approx. eight seconds.

If one of the settings cannot be selected, this is displayed by a X behind the respective setting.

Above a speed of 20 km/h car wash mode is automatically deactivated.

The following settings are reset when car wash mode is deactivated:

- the outside mirrors are folded out.
- the rain sensor is activated.
- the rear window wiper is activated.
- the air conditioning system is set to fresh air mode.
- Parking Assist PARKTRONIC is reset to the previously selected setting.
- the windows and the sliding sunroof remain closed.

- **Vehicles with 360° Camera:** the front image is deactivated at speeds above 18 km/h.

Activating/deactivating automatic car wash mode

Requirements:

- the vehicle is stationary.
- the engine is running.

Multimedia system:

→ ⌂ ▸▸ Settings ▸▸ Quick access

Activating automatic car wash mode

▶ Select Car wash mode.

▶ Select Start.

If one of the settings cannot be selected, this is displayed by a X behind the respective setting.

ⓘ For an overview of the settings made when activating automatic car wash mode (→ page 321).

Deactivating automatic car wash mode

▶ Select Stop.
The automatic car wash settings are reset.

ⓘ The automatic car wash mode is automatically deactivated as soon as a speed of 20 km/h is exceeded.

Information on using a high-pressure cleaner

⚠ **WARNING** Risk of an accident when using high-pressure cleaners with round-spray nozzles

The water jet can cause externally invisible damage.

Components damaged in this way may unexpectedly fail.

▶ Do not use a high-pressure cleaner with round-spray nozzles.

▶ Have damaged tyres or chassis parts replaced immediately.

To avoid damage to your vehicle, observe the following when using a high-pressure cleaner:

- keep the key at least 3 m away from the vehicle. Otherwise the tailgate could open unintentionally.
- maintain a distance of at least 30 cm to the vehicle.
- **vehicles with decorative foil:** parts of your vehicle are covered with a decorative foil. Maintain a distance of at least 70 cm between the foil-covered parts of the vehicle and the nozzle of the high-pressure cleaner. Move the high-pressure cleaner nozzle around whilst cleaning. The water temperature of the high-pressure cleaner must not exceed 60 °C.
- observe the information on the correct distance in the equipment manufacturer's operating instructions.
- do not point the nozzle of the high-pressure cleaner directly at sensitive parts such as tyres, gaps, electrical components, batteries, light sources and ventilation slots.

Washing the vehicle by hand

Observe the legal requirements, e.g. in a number of countries, washing by hand is only permitted in specially designated wash bays.

- ▶ Use a mild cleaning agent, e.g. car shampoo.
- ▶ Wash the vehicle with lukewarm water using a soft car sponge. When doing so, do not expose the vehicle to direct sunlight.
- ▶ Carefully hose the vehicle off with water and dry using a chamois. Take care not to point the water jet directly towards the air inlet grille below the bonnet.

Notes on paintwork/matt finish paintwork care

Observe the notes on cleaning and care to avoid damaging the paintwork.

Paint

- Insect remains: soak with insect remover and rinse off the treated areas afterwards.
- Bird droppings: soak with water and rinse off afterwards.
- Tree resin, oils, fuels and greases: remove by rubbing gently with a cloth soaked in petroleum ether or lighter fluid.
- Coolant and brake fluid: remove with a damp cloth and clean water.
- Tar stains: use tar remover.
- Wax: use silicone remover.
- Do not attach stickers, films or similar materials.
- Remove dirt immediately, where possible.

Matt finish

- Only use care products approved for Mercedes-Benz.
- Do not polish the vehicle and light-alloy wheels.
- Only use car washes that correspond to the latest engineering standards.
- Do not use car wash programmes with a final hot wax treatment.
- Do not use paint cleaners, buffing or polishing products, gloss preservers, e.g. wax.
- Always have paintwork repairs carried out at a qualified specialist workshop.

Notes on cleaning decorative foils

Observe the notes on matt finish care in the chapter "Notes on paintwork/matt finish paintwork care" (→ page 324). They also apply to matt decorative foils.

Observe the notes on cleaning decorative foils to avoid vehicle damage.

Cleaning

- For cleaning, use plenty of water and a mild cleaning agent without additives or abrasive substances, e.g. a car shampoo approved for Mercedes-Benz.
- Remove dirt immediately, where possible, whilst avoiding rubbing too hard. There is otherwise a risk of damaging the decorative foil irreparably.
- If there is dirt on the finish or if the decorative foil is dull: use the Paint Cleaner recommended and approved for Mercedes-Benz.

- Insect remains: soak with insect remover and rinse off the treated areas afterwards.
- Bird droppings: soak with water and rinse off afterwards.
- To prevent water stains, dry a foil-wrapped vehicle with a soft, absorbent cloth after every car wash.

Avoiding damage to the decorative foil

- The service life and colouring of decorative foils are impaired by:
  - sunlight
  - temperature, e.g. hot air blower
  - weather conditions
  - stone chippings and dirt
  - chemical cleaning agents
  - oily products
- Do not use polish on matt decorative foil. Polishing will have the effect of shining the foil-wrapped surface.
- Do not treat matt or structured decorative foils with wax. Permanent stains may occur.

Scratches, corrosive deposits, areas affected by corrosion and damage caused by incorrect care cannot always be completely repaired. In such cases, visit a qualified specialist workshop.

You can obtain more information on care and cleaning products from the manufacturer.

In the case of foil-wrapped surfaces, optical differences may occur between the surfaces that were not protected by a decorative foil after removing a decorative foil.

ⓘ Have work or repairs to decorative foils carried out at a qualified specialist workshop, e.g. in a Mercedes-Benz Service Centre.

Notes on care of car parts

⚠ **WARNING** Risk of entrapment if the windscreen wipers are switched on while the windscreen is being cleaned

If the windscreen wipers are set in motion while you are cleaning the windscreen or wiper blades, you can be trapped by the wiper arm.

▶ Always switch off the windscreen wipers and the ignition before cleaning the windscreen or wiper blades.

⚠ **WARNING** Risk of burns from the tailpipe and tailpipe trims

The exhaust tailpipe and tailpipe trims can become very hot. If you come into contact with these parts of the vehicle, you could burn yourself.

▶ Always be particularly careful around the tailpipe and the tailpipe trims and supervise children especially closely in this area.

▶ Allow vehicle parts to cool down before touching them.

Observe the notes on cleaning and care of the following vehicle parts to avoid damage.

Wheels/rims

- Use water and acid-free wheel cleaners.

- Do not use acidic wheel cleaners to remove brake dust. This could damage wheel bolts and brake components.
- To avoid corrosion of the brake discs and brake pads, drive the vehicle for a few minutes after cleaning before parking it. The brake discs and brake pads warm up and dry out.

Windows

- Clean windows inside and outside with a damp cloth and with a cleaning agent recommended for Mercedes-Benz.
- Do not use dry cloths or abrasive or solvent-based cleaning agents to clean the inside of windows.

Wiper blades

- Fold out the wiper blades and clean them using a damp cloth.
- Do not clean the wiper blades too often.

Exterior lighting

- Clean the lenses with a wet sponge and mild cleaning agent, e.g. car shampoo.
- Only use cleaning agents or cleaning cloths that are suitable for plastic lenses.

Sensors

- Clean the sensors in the front and rear bumper and in the radiator grille with a soft cloth and car shampoo.
- When using a high-pressure cleaner, maintain a minimum distance of 30 cm.

Reversing camera and 360° Camera

- Use clean water and a soft cloth to clean the camera lens.
- Do not use a high-pressure cleaner.

Tailpipes

- Clean with a cleaning agent recommended for Mercedes-Benz, especially in the winter and after washing the vehicle.
- Do not use acidic cleaning agents.

Trailer hitch

- Remove traces of rust on the ball, e.g. with a wire brush.
- Remove dirt with a lint-free cloth.
- After cleaning, oil or grease the ball head lightly.
- Observe the notes on care in the trailer hitch manufacturer's operating instructions.
- Do not clean the ball neck with a high-pressure cleaner or solvent.

Notes on care of the interior

WARNING Risk of injury from plastic parts breaking off after the use of solvent-based care products

Care and cleaning products containing solvents can cause surfaces in the cockpit to become porous. When the airbags are deployed, plastic parts may break away.

▶ Do not use any care or cleaning products containing solvents to clean the cockpit.

WARNING Risk of injury or death from bleached seat belts

Bleaching or dyeing seat belts can severely weaken them.

This can, for example, cause seat belts to tear or fail in an accident.

▶ Never bleach or dye seat belts.

Observe the notes on cleaning and care to avoid vehicle damage.

Seat belts

- Clean with lukewarm and soapy water.
- Do not use chemical cleaning agents.
- Do not dry seat belts by heating them to over 80 °C or exposing them to direct sunlight.

Display

- Switch off the display and let it cool down.
- Clean the surface carefully with a microfibre cloth and a suitable display care product (TFT/LCD).
- Do not use any other agents.

Plastic trim

- Clean with a damp microfibre cloth.
- For heavy soiling: use a care product recommended for Mercedes-Benz.
- Do not attach stickers, films or similar materials.
- Do not allow cosmetics, insect repellent or sun cream to come in contact with the plastic trim.

Real wood/trim elements

- Clean with a microfibre cloth.
- Black piano-lacquer look: clean with a damp cloth and soapy water.
- For heavy soiling: use a care product recommended for Mercedes-Benz.
- Do not use solvent-based cleaning agents, polishes or waxes.

Roof lining

- Clean with a brush or dry shampoo.

Carpet

- Use a carpet and textile cleaning agent recommended for Mercedes-Benz.

Genuine leather seat covers

- Clean with a damp cloth and then wipe with a dry cloth.
- Leather care: use a leather care agent that has been recommended for Mercedes-Benz.
- Do not allow the leather to become too damp.
- Do not use a microfibre cloth.

DINAMICA seat covers

- Clean with a damp cloth.
- Do not use a microfibre cloth.

Imitation leather seat covers

- Clean with a damp cloth and 1% soapy water.
- Do not use a microfibre cloth.

Cloth seat covers

- Clean with a damp microfibre cloth and 1% soap solution and allow to dry.

Emergency

Removing the safety vest

The safety vests are located in the stowage compartments in the driver and front passenger door.

- ▶ **To remove:** pull out the safety vest bag by the loop.
- ▶ Open the safety vest bag and pull out the safety vest.

ⓘ There are also safety vest compartments in the rear door stowage compartments in which safety vests can be stored.

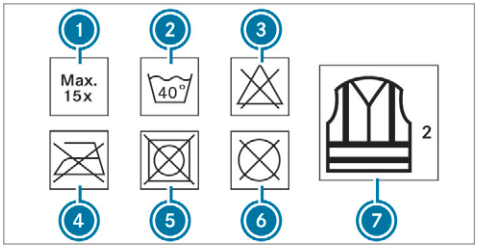

1. Maximum number of washes
2. Maximum wash temperature
3. Do not bleach
4. Do not iron
5. Do not tumble dry
6. Do not dry clean
7. Class 2 safety vest

The requirements defined by the legal standard are only fulfilled if the safety vest is the correct size and is fully closed.

The safety vest must be replaced in the following situations:

- the reflective strips are damaged or dirty
- the maximum permissible number of washes is exceeded
- the fluorescence has faded

Warning triangle

Removing the warning triangle

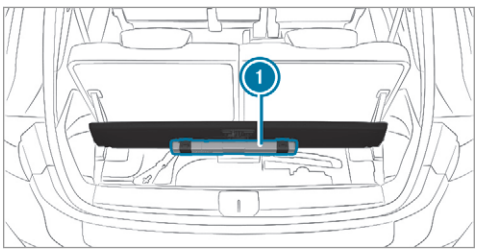

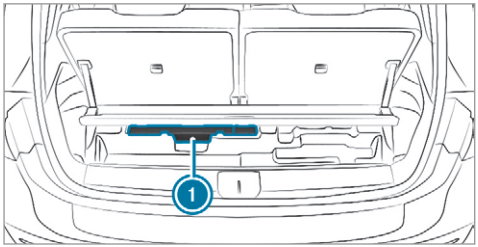

Vehicles with three rows of seats

- Open the load compartment floor.
- Remove warning triangle (1).

Setting up the warning triangle

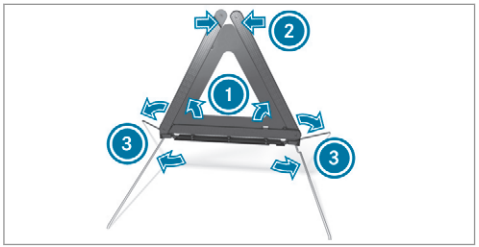

- Fold side reflectors (1) upwards to form a triangle and attach at the top using upper press-stud (2).
- Fold legs (3) down and out to the side.

First-aid kit (soft-sided) overview

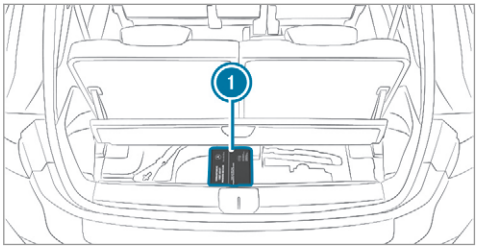

First-aid kit (soft sided) (1) is under the load compartment floor.

Removing the fire extinguisher

WARNING Risk of accident due to an incorrectly secured fire extinguisher in the driver's footwell

A fire extinguisher may impede pedal travel or block a depressed pedal.

This jeopardises the operating and road safety of the vehicle.

The fire extinguisher can be flung around and injure the driver or other vehicle occupants.

- Always store and secure the fire extinguisher in the bracket.
- Do not remove the fire extinguisher while driving.

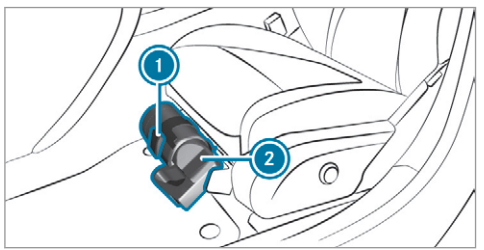

- **Left-hand drive vehicle:** pull tab (1) upwards.
- **Right-hand drive vehicle:** pull tab (1) downwards.
- Remove fire extinguisher (2).

Flat tyre

Notes on flat tyres

WARNING Risk of accident due to a flat tyre

A flat tyre severely affects the driving characteristics as well as the steering and braking of the vehicle.

Tyres without run-flat characteristics:

- Do not drive with a flat tyre.
- Change the flat tyre immediately with an emergency spare wheel or spare wheel. Alternatively, consult a qualified specialist workshop.

Tyres with run-flat characteristics:

- Observe the information and warning notes on MOExtended tyres (run-flat tyres).

In the event of a flat tyre, the following options are available depending on your vehicle's equipment:

- **Vehicles with MOExtended tyres:** it is possible to continue the journey for a short period of time. Make sure you observe the notes on MOExtended tyres (run-flat tyres) (→ page 331).
- **Vehicles with a TIREFIT kit:** you can repair the tyre so that it is possible to continue the journey for a short period of time. To do this, use the TIREFIT kit (→ page 332).
- **Vehicles with Mercedes me connect:** you can make a call for breakdown assistance via the overhead control panel in the case of a breakdown (→ page 294).
- **All vehicles:** change the wheel (→ page 360).

Notes on MOExtended tyres (run-flat tyres)

WARNING Risk of accident when driving in limp-home mode

Driving in emergency mode impairs the handling characteristics of the vehicle.

- ▶ Do not exceed the permissible maximum speed of the MOExtended tyres.
- ▶ Avoid any abrupt steering and driving manoeuvres as well as driving over obstacles (kerbs, pot holes, off-road). This applies, in particular, to a loaded vehicle.
- ▶ Stop driving in the emergency mode if you notice:
  - banging noise
  - vehicle vibration
  - smoke which smells like rubber
  - continuous ESP® intervention
  - cracks in the tyre sidewalls
- ▶ After driving in emergency mode, have the rims checked by a qualified specialist workshop with regard to their further use.
- ▶ The defective tyre must be replaced in every case.

With MOExtended tyres (run-flat tyres), you can continue to drive your vehicle even if there is a total loss of pressure in one or more tyres. However, the tyre affected must not show any clearly visible damage.

You can recognise MOExtended tyres by the MOExtended marking which appears on the side wall of the tyre.

Vehicles with tyre pressure loss warning system: MOExtended tyres may only be used in conjunction with an activated tyre pressure loss warning system.

Vehicles with tyre pressure monitoring system: MOExtended tyres may only be used in conjunction with an activated tyre pressure monitoring system.

If a pressure loss warning message appears in the multifunction display, proceed as follows:

- Check the tyre for damage.
- If driving on, observe the following notes.

Driving distance possible in emergency mode after the pressure loss warning:

Load condition	Driving distance possible in emergency mode
Partially laden	80 km
Fully laden	30 km

The driving distance possible in emergency mode may vary depending on the driving style. Observe the maximum permissible speed of 80 km/h.

If a tyre has gone flat and cannot be replaced with an MOExtended tyre, you can use a standard tyre as a temporary measure.

TIREFIT kit storage location

The TIREFIT kit is located under the load compartment floor.

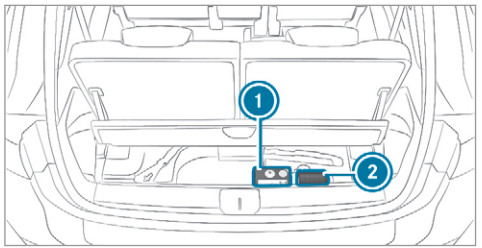

1 Tyre inflation compressor
2 Tyre sealant bottle

ⓘ You can find information on the power category (LK) and/or electrical data on the back of the tyre inflation compressor:

- LK2 – 12 V/15 A, 180 W, 0.8 kg

At a distance of approximately 1 m to the tyre inflation compressor and approximately 1.6 m above the ground, the following sound pressure levels apply:

- Emission sound pressure level L_{PA} 83 dB (A)
- Sound power level L_{WA} 91 dB (A)

The tyre inflation compressor is maintenance-free. If there is a malfunction, please contact a qualified specialist workshop.

Using the TIREFIT kit

Requirements:

Required tools:

- Tyre sealant bottle
- TIREFIT sticker
- Sticker with details of the maximum permissible speed
- Tyre inflation compressor
- Gloves

TIREFIT kit storage location: (→ page 332)

You can use TIREFIT tyre sealant to seal perforation damage of up to 4 mm, particularly those in the tyre contact surface. You can use TIREFIT in outside temperatures down to -20 °C.

⚠ WARNING Risk of accident when using tyre sealant

The tyre sealant may be unable to seal the tyre properly, especially in the following cases:

- there are cuts or punctures in the tyre larger than damage previously mentioned.
- the wheel rim is damaged.
- you have driven at very low tyre pressures or on a flat tyre.

▶ Do not drive on.
▶ Consult a qualified specialist workshop.

⚠ WARNING Risk of injury and poisoning from tyre sealant

Tyre sealant is hazardous to health and causes irritation. Do not allow it to come into contact with your skin, eyes or clothing, and do not swallow it. Do not inhale any vapours. Keep the tyre sealant away from children.

Observe the following if you come into contact with the tyre sealant:

- Rinse off the tyre sealant from your skin using water immediately.
- If tyre sealant gets into your eyes, thoroughly rinse them using clean water immediately.
- If tyre sealant has been swallowed, thoroughly rinse out your mouth immediately and drink plenty of water. Do not induce vomiting and seek medical attention immediately.
- Change out of clothing which has come into contact with tyre sealant immediately.
- If an allergic reaction occurs, seek medical attention immediately.

! NOTE Overheating due to the tyre inflation compressor running too long

- Do not run the tyre inflation compressor for longer than ten minutes without interruption.

Comply with the manufacturer's safety notes on the sticker on the tyre sealant bottle.

Have the tyre sealant bottle replaced in a qualified specialist workshop every five years.

- Do not remove any foreign objects which have entered the tyre.

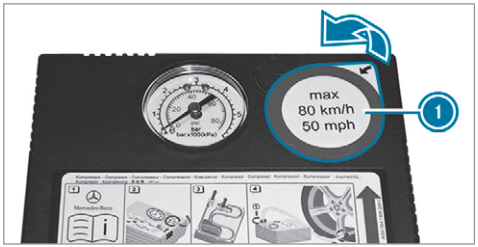

- Remove sticker (1) from the tyre inflation compressor housing and affix it to the instrument cluster within the driver's field of vision.

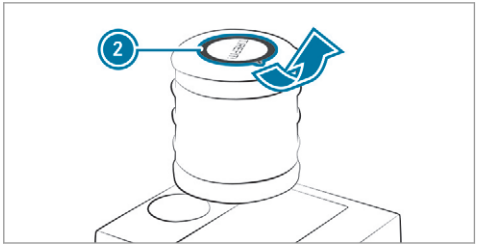

- Remove sticker (2) from the tyre sealant bottle and affix it near the valve on the wheel with the defective tyre.

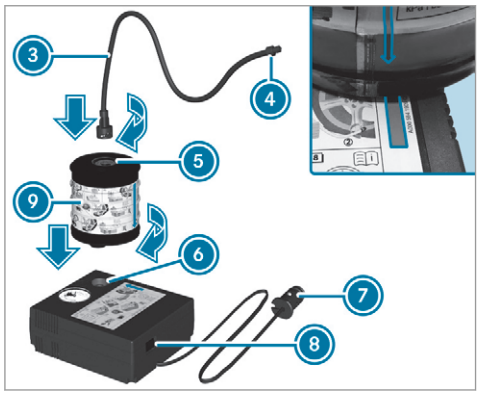

- Pull plug (7) with the cable and filler hose (3) out of the tyre inflation compressor housing.
- Insert tyre sealant bottle (9) in socket (6) of the tyre inflation compressor in such a way that the red arrow on tyre sealant bottle (9) matches the red arrow on the tyre inflation compressor.
- Turn tyre sealant bottle (9) a quarter turn clockwise.
- Insert the plug of filler hose (3) in socket (5) of tyre sealant bottle (9).
- Turn filler hose (3) a quarter turn clockwise.

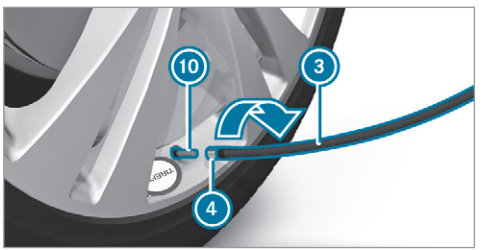

- Remove the valve cap from valve (10) on the faulty tyre.
- Screw union nut (4) of filler hose (3) onto valve (10).
- Insert plug (7) into a 12 V socket in your vehicle.
- Turn the key to position 1 in the ignition lock.
- Press on and off switch (8) on the tyre inflation compressor.
  The tyre inflation compressor is switched on. The tyre is inflated. First, tyre sealant is pumped into the tyre. The pressure may briefly rise to approximately 500 kPa (5 bar/73 psi).

Do not switch off the tyre inflation compressor during this phase!

- Let the tyre inflation compressor run for a maximum of ten minutes.
  The tyre should then have attained a tyre pressure of at least 200 kPa (2.0 bar/29 psi).

If tyre sealant leaks out, make sure you clean the affected area as quickly as possible. It is preferable to use clean water.

If you get tyre sealant on your clothing, have it cleaned as soon as possible with perchloroethylene.

If, after ten minutes, a tyre pressure of 200 kPa (2.0 bar/29 psi) has not been attained:

- Switch off the tyre inflation compressor.
- Unscrew the filling hose from the valve of the defective tyre.

Please note that tyre sealant may leak out when unscrewing the filling hose.

- Drive forwards or in reverse very slowly for approximately 10 m.
- Pump up the tyre again.
  After a maximum of ten minutes the tyre pressure must be at least 200 kPa (2.0 bar/29 psi).

⚠ **WARNING** Risk of accident due to the specified tyre pressure not being attained

If the minimum tyre pressure is not reached after the specified time, the tyre is too badly damaged. The tyre sealant cannot repair the tyre in this instance.

The braking and driving characteristics may be greatly impaired.

- Do not continue driving.
- Consult a qualified specialist workshop.

! **NOTE** Staining from leaking tyre sealant

After use, excess tyre sealant may leak out from the filling hose.

- Therefore, place the filling hose in the plastic bag that contained the TIREFIT kit.

If, after ten minutes, a tyre pressure of 200 kPa (2.0 bar/29 psi) has been attained:

- Switch off the tyre inflation compressor.
- Unscrew the filling hose from the valve of the defective tyre.

Please note that tyre sealant may leak out when unscrewing the filling hose.

⚠ **WARNING** Risk of accident from driving with sealed tyres

A tyre temporarily sealed with tyre sealant impairs the handling characteristics and is not suitable for higher speeds.

- Adapt your driving style accordingly and drive carefully.
- Do not exceed the maximum speed limit with a tyre that has been repaired using tyre sealant.

- Observe the maximum permissible speed for a tyre sealed with tyre sealant 80 km/h.
- The sticker with details of the maximum permissible speed must be affixed to the instrument cluster where it can be easily seen by the driver.

! **NOTE** Staining from leaking tyre sealant

After use, excess tyre sealant may leak out from the filling hose.

- Therefore, place the filling hose in the plastic bag that contained the TIREFIT kit.

ENVIRONMENTAL NOTE Environmental pollution caused by environmentally irresponsible disposal

Tyre sealant contains pollutants.

- Have the tyre sealant bottle disposed of professionally, e.g. at a Mercedes-Benz Service Centre.

- Stow the tyre sealant bottle, the tyre inflation compressor and the warning triangle.
- **Pull away immediately.**
- Stop driving after approximately ten minutes and check the tyre pressure using the tyre inflation compressor.
  The tyre pressure must now be at least 130 kPa (1.3 bar/19 psi).

WARNING Risk of accident due to the specified tyre pressure not being attained

If the specified tyre pressure is not reached, the tyre is too badly damaged. The tyre sealant cannot repair the tyre in this instance.

The braking and driving characteristics may be greatly impaired.

- Do not continue driving.
- Consult a qualified specialist workshop.

Countries that have Mercedes-Benz Service24h: you will find a sticker with the telephone number, e.g. on the B-pillar on the driver's side.

- Correct the tyre pressure if it is still at least 130 kPa (1.3 bar/19 psi). See the tyre pressure table on the fuel filler flap for values.
- **To increase the tyre pressure:** switch on the tyre inflation compressor.
- **To reduce the tyre pressure:** remove the tyre sealant bottle from the tyre inflation compressor.
- Insert the filler hose in the socket of the tyre inflation compressor and turn it a quarter turn clockwise.

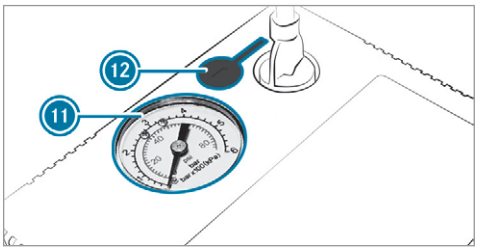

- Press pressure release button (12) next to manometer (11).
- When the tyre pressure is correct, unscrew the filling hose from the valve of the sealed tyre.
- Screw the valve cap onto the valve of the sealed tyre.
- Stow the tyre sealant bottle and the tyre inflation compressor.

▶ Drive to the nearest qualified specialist workshop and have the tyre, tyre sealant bottle and filling hose replaced there.

Battery (vehicle)

Notes on the 12 V battery

⚠ WARNING Risk of an accident due to work carried out incorrectly on the battery

Work carried out incorrectly on the battery can, for example, lead to a short circuit. This can restrict functions relevant for safety systems and impair the operating safety of your vehicle.

You could lose control of the vehicle in the following situations in particular:

- when braking
- in the event of abrupt steering manoeuvres and/or when the vehicle's speed is not adapted to the road conditions

▶ In the event of a short circuit or a similar incident, contact a qualified specialist workshop immediately.

▶ Do not drive on.

▶ Always have work on the battery carried out at a qualified specialist workshop.

- Further information on ABS (⟶ page 204)
- Further information on ESP® (⟶ page 205)

For safety reasons, Mercedes-Benz recommends that you only use batteries which have been tested and approved for your vehicle by Mercedes-Benz. These batteries provide increased impact protection to prevent vehicle occupants from suffering acid burns should the battery be damaged in the event of an accident.

⚠ WARNING Risk of explosion due to electrostatic charge

Electrostatic charge can ignite the highly explosive gas mixture in the battery.

▶ To discharge any electrostatic charge that may have built up, touch the metal vehicle body before handling the battery.

The highly flammable gas mixture is created while the battery is charging and during starting assistance.

⚠ WARNING Danger of chemical burns from the battery acid

Battery acid is caustic.

▶ Avoid contact with the skin, eyes or clothing.

▶ Do not lean over the battery.

▶ Do not inhale battery gases.

▶ Keep children away from the battery.

▶ Immediately rinse battery acid off thoroughly with plenty of clean water and seek medical attention immediately.

ENVIRONMENTAL NOTE Environmental damage due to improper disposal of batteries



Batteries contain pollutants. It is illegal to dispose of them with the household rubbish.

▶ 

Dispose of batteries in an environmentally responsible manner. Take discharged batteries to a qualified specialist workshop or to a collection point for used batteries.

If you have to disconnect the 12 V battery, contact a qualified specialist workshop.

Comply with safety notes and take protective measures when handling batteries.



Risk of explosion.



Fire, naked flames and smoking are prohibited when handling the battery. Avoid creating sparks.



Electrolyte or battery acid is corrosive. Avoid contact with the skin, eyes or clothing. Wear suitable protective clothing, in particular gloves, an apron and a face mask. Immediately rinse electrolyte or acid splashes off with clean water. Consult a doctor if necessary.



Wear safety glasses.



Keep children away.



Observe this Owner's Manual.

If you do not intend to use the vehicle over an extended period of time:

- activate standby mode, or
- connect the battery to a battery charger approved by Mercedes-Benz, or
- consult a qualified specialist workshop to disconnect the battery

Notes on starting assistance and charging the 12 V battery

When charging the battery and during starting assistance, always use the jump-start connection point in the engine compartment.

NOTE Damage to the battery from overvoltage

When charging using a battery charger without a restriction of the maximum charging

voltage, the battery or the on-board electronics can be damaged.

- Only use battery chargers with a maximum charging voltage of 14.8 V.

⚠ WARNING Risk of explosion from hydrogen gas igniting

There is a danger of hydrogen gas igniting when charging the battery if there is a short circuit or sparks start to form.

- Make sure that the positive terminal of the connected battery does not come into contact with vehicle parts.
- Never place metal objects or tools on a battery.
- The described order of the battery clamps must be observed when connecting and disconnecting the battery.
- When giving starting assistance, always make sure that you only connect battery terminals with identical polarity.
- During starting assistance, you must observe the described order for connecting and disconnecting the jump lead.
- Do not connect or disconnect the battery clamps while the engine is running.

⚠ WARNING Risk of explosion during charging process and starting assistance

During the charging process and starting assistance, the battery may release an explosive gas mixture.

- Avoid fire, naked flames, creating sparks and smoking.
- Make sure there is sufficient ventilation.
- Do not lean over a battery.

⚠ WARNING Risk of explosion from a frozen battery

A discharged battery may freeze at temperatures slightly above or below freezing point.

During starting assistance or battery charging, battery gas can be released.

- Always allow a battery to thaw before charging it or performing starting assistance.

If the indicator/warning lamps in the instrument cluster do not light up at low temperatures, it is very likely that the discharged battery has frozen. In this case you may neither jump-start the vehicle nor charge the battery.

The service life of a battery that has been thawed may be dramatically shortened. The starting characteristics may be impaired, especially at low temperatures.

It is recommended that you have a thawed battery checked at a qualified specialist workshop.

! NOTE Damage caused by numerous or extended attempts to start the engine

Numerous or extended attempts to start the engine may damage the catalytic converter due to non-combusted fuel.

- Avoid numerous and extended attempts to start the engine.

Observe the following points during starting assistance and when charging the battery:

- Only use undamaged jump lead/charging cables with a sufficient cross-section and insulated terminal clamps.
- Non-insulated parts of the terminal clamps must not come into contact with other metal parts while the jump lead/charging cable is connected to the battery/jump-start connection point.
- The jump lead/charging cable must not come into contact with any parts which may move when the engine is running.
- Always make sure that neither you nor the battery is electrostatically charged.
- Keep away from fire and naked flames.
- Do not lean over the battery.

Observe the additional following points when charging the battery:

- Only use battery chargers tested and approved for Mercedes-Benz.
- Read the battery charger's operating instructions before charging the battery.

Observe the additional following points during starting assistance:

- For starting assistance, only use batteries with a nominal voltage of 12 V.
- The vehicles must not touch.
- **Petrol engine:** only accept starting assistance if the engine and exhaust system are cold.

Starting assistance and charging the 12 V battery

Requirements:

- The vehicle is secured with the electric parking brake.
- **Automatic transmission:** the transmission is in position P.
- **Manual transmission:** the transmission is in neutral.
- The ignition and all electrical consumers are switched off.
- The bonnet is open.

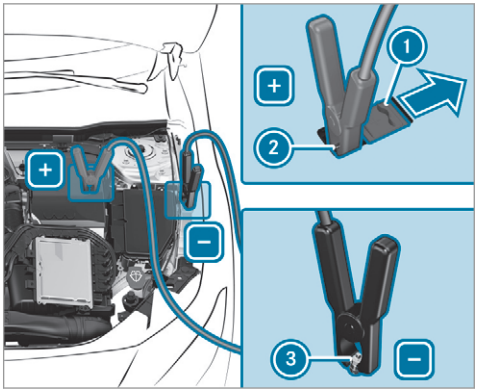

▶ Slide cover 1 of positive clamp 2 on the jump-starting connection point in the direction of the arrow.

▶ Connect positive clamp 2 on your vehicle to the positive pole of the donor battery using the jump lead/charging cable. Always begin with positive clamp 2 on your own vehicle first.

- **During starting assistance:** start the engine of the donor vehicle and run at idle speed.
- Connect the negative pole of the donor battery and earth point (3) of your own vehicle by using the jump lead/charging cable. Begin with the donor battery first.
- **During starting assistance:** start the engine of your own vehicle.
- **During the charging process:** start the charging process.
- **During starting assistance:** let the engines run for several minutes.
- **During starting assistance:** before disconnecting the jump lead, switch on an electrical consumer in your own vehicle, e.g. the rear window heater or lighting.

When the starting assistance/charging process is complete:

- First, remove the jump lead/charging cable from earth point (3) and the negative pole of the donor battery, then from positive clamp (2) and the positive pole of the donor battery. Begin each time with the contacts on your own vehicle first.
- After removing the jump lead/charging cable, close cover (1) of positive clamp (2).

Further information can be obtained at a qualified specialist workshop.

Replacing the 12 V battery

- Observe the notes on the 12 V battery (→ page 337).

Mercedes-Benz recommends that you have the 12 V battery replaced at a qualified specialist workshop, e.g. at a Mercedes-Benz Service Centre.

Observe the following notes if you want to replace the battery yourself:

- Always replace a faulty battery with a battery which meets the specific vehicle requirements.

  The vehicle is equipped with an AGM technology battery (Absorbent Glass Mat). Full vehicle functionality is only guaranteed with an AGM battery. For safety reasons, Mercedes-Benz recommends that you only use batteries which have been tested and approved for your vehicle by Mercedes-Benz.
- Use detachable parts such as vent hoses, elbow fittings or terminal covers from the battery which is to be replaced.
- Make sure that the vent hose is always connected to the original opening on the side of the battery.

  Fit any existing or supplied cell caps.

  Otherwise, gases or battery acid could escape.
- Make sure that detachable parts are reconnected in the same way.

Tow-starting or towing away

Permitted towing methods

Permitted towing methods

Mercedes-Benz recommends transporting your vehicle in the case of a breakdown, rather than towing it away.

For towing, use a tow rope or tow bar with both axles on the ground. Do not use tow bar systems.

WARNING Risk of accident when towing with steering wheel lock

You will no longer be able to steer the vehicle if the steering wheel lock is engaged.

- Always switch on the ignition when towing the vehicle with a tow cable or a tow bar.

NOTE Damage to the vehicle due to towing away incorrectly

- Observe the instructions and notes on towing away.

Vehicles with manual transmission	
Both axles on the ground	Yes, maximum 50 km at 50 km/h
Front axle raised	Yes, maximum 50 km at 50 km/h
Rear axle raised	Yes, maximum 50 km at 50 km/h

Vehicles with automatic transmission	
Both axles on the ground	Yes, maximum 50 km at 50 km/h
Front axle raised	Yes, maximum 50 km at 50 km/h
Rear axle raised	Yes, maximum 50 km at 50 km/h

4MATIC vehicles	
Both axles on the ground	Yes, maximum 50 km at 50 km/h
Front axle raised	No
Rear axle raised	No

Towing with a raised axle: towing should be performed by a towing company.

Towing the vehicle with both axles on the ground

- Observe the notes on the permitted towing methods (→ page 341).
- Make sure that the battery is connected and charged.

Observe the following points when the battery is discharged:

- the engine cannot be started

- the electric parking brake cannot be released or applied
- **vehicles with automatic transmission:** the automatic transmission cannot be shifted to position N or P

ⓘ **Vehicles with automatic transmission:** if the automatic transmission cannot be shifted to position N, or the multifunction display in the instrument cluster does not show anything, have the vehicle transported away (→ page 344). A towing vehicle with lifting equipment is required for vehicle transportation.

! NOTE Damage due to towing away at excessively high speeds or over long distances

The drivetrain could be damaged when towing at excessively high speeds or over long distances.

▶ A towing speed of 50 km/h must not be exceeded.

▶ A towing distance of 50 km must not be exceeded.

⚠ WARNING Risk of accident when towing a vehicle which is too heavy

If another vehicle is tow-started or towed away, its weight must not exceed the permissible gross mass of your own vehicle, otherwise the following could occur:

- the towing eye may become detached.
- the vehicle/trailer combination may swerve or even overturn.

▶ If another vehicle is tow-started or towed away, its weight must not exceed the permissible gross mass of your own vehicle.

If a vehicle must be tow-started or towed away, its permissible gross weight must not exceed the permissible gross weight of the towing vehicle.

▶ Information on the permissible gross mass of the vehicle can be found on the vehicle identification plate (→ page 370).

▶ **Vehicles with automatic transmission:** do not open the driver's door or front passenger door, otherwise the automatic transmission automatically shifts to position P.

▶ Fit the towing eye (→ page 345).

▶ Fasten the tow bar.

! NOTE Damage due to incorrect connection of the tow bar

▶ Only connect the tow rope or tow bar to the towing eyes.

▶ Deactivate the automatic locking mechanism (→ page 80).

▶ Do not activate the HOLD function.

▶ Deactivate tow-away protection (→ page 97).

▶ Deactivate Active Brake Assist (→ page 212).

▶ **Vehicles with automatic transmission:** shift the automatic transmission to position N.

▶ **Vehicles with manual transmission:** shift to neutral N.

▶ Release the electric parking brake.

⚠ WARNING Risk of accident due to limited safety-related functions during the towing process

Safety-related functions are limited or no longer available in the following situations:

- the ignition is switched off.
- the brake system or power steering system is malfunctioning.
- the energy supply or the on-board electrical system is malfunctioning.

When your vehicle is then towed away, significantly more effort may be required to steer and brake than is normally required.

▶ Use a tow bar.

▶ Make sure that the steering wheel can move freely before towing the vehicle away.

! NOTE Damage due to excessive tractive power

If you pull away sharply, the tractive power may be too high and the vehicles could be damaged.

▶ Pull away slowly and smoothly.

Loading the vehicle for transport

▶ Observe the notes on towing away (→ page 342).

▶ Connect the tow bar to the towing eye in order to load the vehicle.

ⓘ You can also attach the tow bar to the trailer hitch.

▶ **Vehicles with automatic transmission:** shift the automatic transmission to position N.

ⓘ **Vehicles with automatic transmission:** the automatic transmission may be locked in position P in the event of damage to the electrical system. To shift to N, provide the on-board electrical system with power (→ page 340).

▶ **Vehicles with manual transmission:** shift to neutral.

▶ Load the vehicle onto the transporter.

▶ **Vehicles with automatic transmission:** shift the automatic transmission to position P.

▶ **Vehicles with manual transmission:** engage first or reverse gear.

▶ Use the electric parking brake to secure the vehicle against rolling away.

▶ Only secure the vehicle by the wheels.

Vehicles with ADS PLUS (Adaptive Damping System PLUS)

⚠ WARNING Risk of an accident when transporting vehicles with Adaptive Damping System PLUS

When transporting vehicles with Adaptive Damping System PLUS, the vehicle/trailer combination may begin to rock and start to skid.

- When transporting, ensure that:
  - the vehicle has been loaded onto the transporter correctly
  - the vehicle is secured at all four wheels with suitable tensioning straps
  - the maximum permissible speed of 60 km/h is not exceeded when transporting

NOTE Damage to the vehicle from securing it incorrectly

- After loading, the vehicle must be secured on all four wheels. Otherwise, the vehicle could be damaged.
- A minimum distance of 20 cm upwards and 10 cm downwards must be kept to the transport platform.

- Secure the vehicle on all four wheels after loading.

4MATIC vehicles/vehicles with automatic transmission

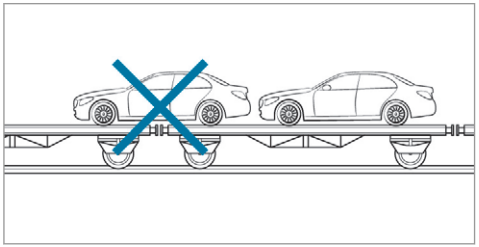

- Make sure that the front and rear axles come to rest on the same transportation vehicle.

NOTE Damage to the drivetrain due to incorrect positioning

- Do not position the vehicle above the connection point of the transport vehicle.

Towing eye storage location

Towing eye is under the load compartment floor.

Installing the towing eye

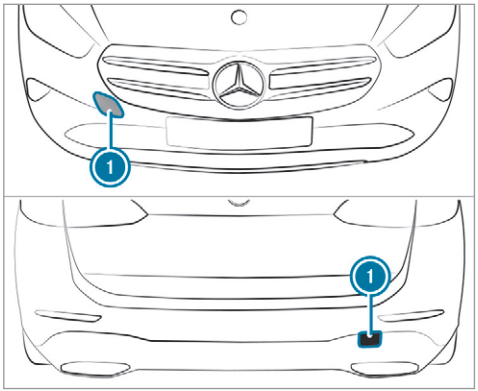

- Press the mark on cover (1) inwards and remove.
- Screw in the towing eye clockwise as far as it will go and tighten.

Vehicles with a trailer hitch: vehicles with a trailer hitch do not have a rear bracket for the

towing eye. Fasten the tow bar to the trailer hitch.

ⓘ Make sure that cover (1) engages in the bumper when you remove the towing eye.

! NOTE Damage to the vehicle due to incorrect use of the towing eye

When a towing eye is used to recover a vehicle, the vehicle may be damaged in the process.

- Only use the towing eye to tow away or tow start the vehicle.

Tow starting the vehicle (emergency engine start)

Vehicles with automatic transmission

! NOTE Damage to the automatic transmission due to tow-starting

The automatic transmission may be damaged in the process of tow-starting vehicles with automatic transmission.

- Vehicles with automatic transmission must not be tow-started.

- Vehicles with automatic transmission must not be tow-started.

Vehicles with manual transmission

- Observe the notes on towing away (→ page 342).
- If necessary, allow the engine and exhaust system to cool down.
- Switch the ignition on.
- Engage second gear.
- Release the electric parking brake.
- Tow-start the vehicle while the clutch pedal is fully depressed.
- Slowly release the clutch pedal.
- Immediately shift to neutral if the engine starts.
- Pull over and stop the vehicle, paying attention to road and traffic conditions.
- Remove the tow bar.
- Remove the towing eye.
- Have the vehicle checked at a qualified specialist workshop.

Electrical fuses

Notes on electrical fuses

⚠ WARNING Risk of accident and injury due to overloaded lines

If you manipulate or bridge a faulty fuse or if you replace it with a fuse with a higher amperage, the electric line could be overloaded.

This could result in a fire.

- Always replace faulty fuses with specified new fuses containing the correct amperage.

! NOTE Damage due to incorrect fuses

Electrical components or systems may be damaged by incorrect fuses, or their functionality may be significantly impaired.

▶ Only use fuses that have been approved by Mercedes-Benz and which have the correct fuse rating.

Blown fuses must be replaced with fuses of the same rating, which you can recognise by the colour and fuse rating. The fuse ratings and further information to be observed can be found in the fuse assignment diagram.

Fuse assignment diagram: on the fuse box in the engine compartment (→ page 347).

! NOTE Damage or malfunctions caused by moisture

Moisture may cause damage to the electrical system or cause it to malfunction.

▶ When the fuse box is open, make sure that no moisture can enter the fuse box.

▶ When closing the fuse box, make sure that the seal of the lid is positioned correctly on the fuse box.

If the newly inserted fuse also blows, have the cause traced and rectified at a qualified specialist workshop.

Ensure the following before replacing a fuse:

- The vehicle is secured against rolling away.
- All electrical consumers are switched off.
- The ignition is switched off.

The electrical fuses are located in various fuse boxes:

- Fuse box in the engine compartment on the left-hand side of the vehicle, when viewed in the direction of travel (→ page 347)
- Fuse box in the front passenger footwell (→ page 348)
- Fuse box in the centre of the load compartment (→ page 349)

Opening and closing the fuse box in the engine compartment

Requirements:

- A dry cloth and a screwdriver are available.

Observe the notes on electrical fuses (→ page 346).

Opening

⚠ WARNING Risk of injury from using the windscreen wipers while the engine bonnet is open

When the engine bonnet is open, and the windscreen wipers are set in motion, you can be trapped by the wiper linkage.

▶ Always switch off the windscreen wipers and ignition before opening the engine bonnet.

▶ Open the bonnet.

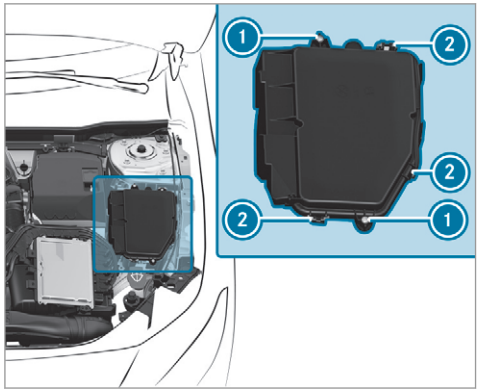

- Remove any existing moisture from the fuse box using a dry cloth.
- Loosen screws (1).
- Press clamps (2) and lift the fuse box lid up and out.

The fuse assignment diagram is in a recess on the side of the fuse box.

Closing

- Check whether the seal is positioned correctly in the lid.
- Place the lid on the fuse box.
- Make sure that clamps (2) engage.
- Tighten screws (1).
- Close the bonnet.

Opening and closing the fuse box in the front passenger footwell

Observe the notes on electrical fuses (→ page 346).

Opening

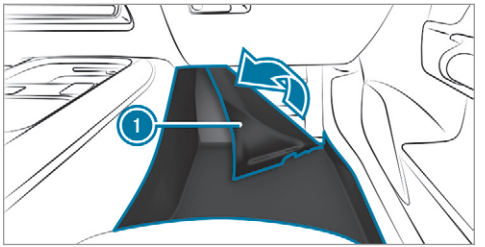

- Lift carpet (1) in the direction of the arrow.

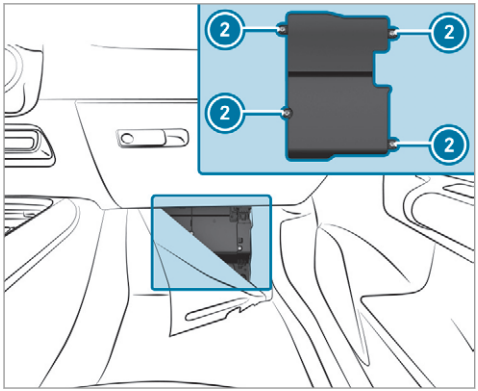

▶ Loosen screws (2) and remove the fuse box lid from the top.

Closing

▶ Place the lid on the fuse box.

▶ Tighten screws (2).

▶ Fold back the carpet.

Opening and closing the fuse box in the load compartment

Observe the notes on electrical fuses (→ page 346).

▶ Open the load compartment floor .

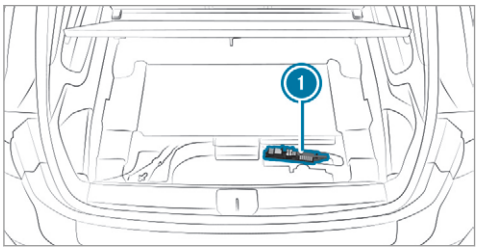

Fuse box (1) is located underneath the load compartment floor.

Notes on noise or unusual handling characteristics

Make sure there are no vibrations, noises or unusual handling characteristics when the vehicle is in motion. This may indicate that the wheels or tyres are damaged. Hidden tyre damage could also be causing the unusual handling characteristics.

If you suspect that a tyre is defective, reduce your speed immediately and have the tyres and wheels checked at a qualified specialist workshop.

Notes on regularly inspecting wheels and tyres

⚠ WARNING Risk of injury through damaged tyres

Damaged tyres can cause tyre pressure loss.

▶ Check the tyres regularly for signs of damage and replace any damaged tyres immediately.

⚠ WARNING Risk of aquaplaning due to insufficient tyre tread

Insufficient tyre tread will result in reduced tyre grip.

The risk of aquaplaning is increased on wet roads, especially when the speed of the vehicle is not adapted to suit the conditions.

▶ Thus, you should regularly check the tread depth and the condition of the tyre contact surface across the entire width of all tyres.

Minimum tread depth for:

- Summer tyres: 3 mm
- M+S tyres: 4 mm

▶ For safety reasons, replace the tyres before the legally-prescribed limit for the minimum tread depth is reached.

Carry out the following checks on all wheels regularly, at least once a month or as required, for example, prior to a long journey or driving off-road:

- Check the tyre pressure (→ page 351).
- Visually inspect wheels and tyres for damage.
- Check the valve caps.
- Visual check of the tyre tread depth and the tyre contact surface across the entire width.

  The minimum tread depth for summer tyres is 3 mm and for winter tyres 4 mm.

Notes on snow chains

⚠ WARNING Risk of accident due to incorrect snow chain fitting

If you fit snow chains to the rear wheels, the snow chains may grind against the vehicle body or chassis components.

This could cause damage to the vehicle or the tyres.

- Never fit snow chains to the rear wheels.
- Always fit snow chains to the front wheels in pairs.

! NOTE Damage to components of the vehicle body or chassis due to fitted snow chains

If you fit snow chains to the front wheels of 4MATIC vehicles, you may damage components of the vehicle body or chassis.

- Only fit snow chains to the rear wheels of 4MATIC vehicles.

! NOTE Damage to the wheel trim from fitted snow chains

If snow chains are fitted to steel wheels, the wheel trims can be damaged.

- Remove the wheel trims of steel wheels before fitting snow chains.

Observe the following notes when using snow chains:

- Snow chains are only permissible for certain wheel/tyre combinations. You can obtain information about this from a Mercedes-Benz Service Centre.
- For safety reasons, only use snow chains that have been specifically approved for your vehicle by Mercedes-Benz, or snow chains with the same quality standard.
- If snow chains are fitted, the maximum permissible speed is 50 km/h.
- **Vehicles with Active Parking Assist:** do not use Active Parking Assist when snow chains are fitted.

ⓘ You can permanently limit the maximum vehicle speed for driving with winter tyres (→ page 215).

ⓘ You can deactivate ESP® to pull away (→ page 206). This allows the wheels to spin, achieving an increased driving force.

Tyre pressure

Notes on tyre pressure

⚠ WARNING Risk of accident due to insufficient or excessive tyre pressure

Underinflated or overinflated tyres pose the following risks:

- The tyres may burst, especially as the load and vehicle speed increase.
- The tyres may wear excessively and/or unevenly, which may greatly impair tyre traction.
- The driving characteristics, as well as steering and braking, may be greatly impaired.

- Comply with the recommended tyre pressure and check the tyre pressure of all tyres including the spare wheel regularly:

- at least once a month
- when the load changes

- before embarking on a longer journey
- if operating conditions change, e.g. off-road driving

▶ Adjust the tyre pressure as necessary.

Tyre pressure which is too high or too low can:

- Shorten the service life of the tyres.
- Cause increased tyre damage.
- Adversely affect driving characteristics and thus driving safety, e.g. due to aquaplaning.

⚠ **WARNING** Risk of accident from repeated tyre pressure drop

If the tyre pressure drops repeatedly, the wheel, valve or tyre may be damaged.

Insufficient tyre pressure can cause the tyres to burst.

▶ Inspect the tyre for signs of foreign objects.

▶ Check whether the wheel or valve has a leak.

▶ If you are unable to rectify the damage, contact a qualified specialist workshop.

Information on the recommended tyre pressure for the vehicle's factory-fitted tyres can be found on the tyre pressure table on the inside of the fuel filler flap (→ page 352).

Use a suitable pressure gauge to check the tyre pressure. The outer appearance of a tyre does not permit any reliable conclusion about the tyre pressure.

Only correct tyre pressures when the tyres are cold. Conditions for cold tyres:

- The vehicle has been parked with the tyres out of direct sunlight for at least three hours.
- The vehicle has travelled less than 1.6 km.

The vehicle's tyres heat up when driving. As the temperature of the tyres increases, so too does the tyre pressure.

Vehicles with a tyre pressure monitoring system: you can also check the tyre pressure using the on-board computer.

Notes on trailer operation

Always inflate the rear axle tyres to the recommended tyre pressures on the tyre pressure table for increased load.

Tyre pressure table

The tyre pressure table is on the inside of the fuel filler flap.

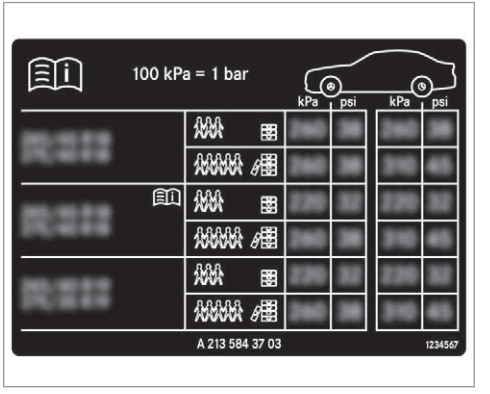

If one or more tyre sizes precede a tyre pressure, the following tyre pressure information is only valid for those tyre sizes and their respective load condition.

If the preceding tyre sizes are complemented by the symbol, the tyre pressure information following shows alternative tyre pressures. Fuel consumption may then increase slightly.

The load conditions "partially laden" and "fully laden" are defined in the table for different numbers of passengers and amounts of luggage. The actual number of seats may differ from this.

Tyre pressure monitoring system

Function of the tyre pressure monitoring system

The system checks the tyre pressure and the tyre temperature of the tyres fitted to the vehicle by means of a tyre pressure sensor.

The tyre pressure and the tyre temperature appear in the multifunction display (→ page 353).

If there is a substantial pressure loss or if the tyre temperature is excessive, you will be warned in the following ways:

- via display messages (→ page 431)
- via the warning lamp in the instrument cluster (→ page 452)

The tyre pressure monitoring system is only an aid. It is the driver's responsibility to set the tyre pressure to the recommended cold tyre pressure suitable for the operating situation.

In most cases, the tyre pressure monitoring system will automatically update the new reference values after you have changed the tyre pressure. You can, however, also update the reference values by restarting the tyre pressure monitoring system manually (→ page 354).

System limits

The system may be impaired or may not function in the following situations:

- the tyre pressure has been set incorrectly
- there is a sudden pressure loss caused, for example, by a foreign object penetrating the tyre
- there is a malfunction caused by another radio signal source

Checking the tyre pressure with the tyre pressure monitoring system

Requirements:

- The ignition is switched on.

On-board computer:

Service ▸▸ Tyres

One of the following displays appears:

- Current tyre pressure and tyre temperature of the individual wheels:

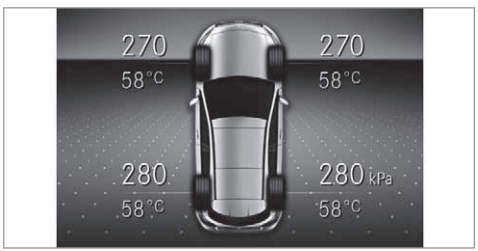

- Tyre pressures will be displayed after a few minutes of driving
- Tyre pressure monitor active: the teach-in process of the system is not yet complete. The tyre pressures are already being monitored.

▶ Compare the tyre pressure with the recommended tyre pressure for the current operating condition (→ page 352). Observe the notes on tyre temperature (→ page 351).

ⓘ The values displayed in the multifunction display may deviate from those of the tyre pressure gauge as they refer to sea level. At high altitudes, the tyre pressure values indicated by a pressure gauge are higher than those shown by the on-board computer. In this case, do not reduce the tyre pressure.

Restarting the tyre pressure monitoring system

Requirements:

- The recommended tyre pressure is correctly set for the respective operating status on all of the wheels (→ page 351).

Restart the tyre pressure monitoring system in the following situations:

- The tyre pressure has changed.
- The wheels or tyres have been changed or newly fitted.

On-board computer:

→ Service ▸▸ Tyres

▶ Swipe downwards on Touch Control on the left-hand side of the steering wheel.
The Use current pressures as new reference values? message is shown in the multifunction display.

▶ To restart, press Touch Control on the left-hand side of the steering wheel.
The Tyre press. monitor restarted message is shown in the multifunction display.

Current warning messages are deleted and the yellow (!) warning lamp goes out.

After you have been driving for a few minutes, the system checks whether the current tyre pressures are within the specified range. The current tyre pressures are then accepted as reference values and monitored.

Be sure to also pay attention to the following related topic:

- Notes on tyre pressure (→ page 351)

Tyre pressure loss warning system

Function of the tyre pressure loss warning system

The tyre pressure loss warning system warns the driver by means of display messages when there is a severe tyre pressure loss.

System limits

The system may be impaired or may not function particularly in the following situations:

- incorrectly set tyre pressure
- sudden pressure loss caused, for example, by a foreign object penetrating the tyre
- steady pressure loss in several tyres

The system has a restricted or delayed function particularly in the following situations:

- poor ground conditions, e.g. snow or gravel
- driving with snow chains

- when adopting a very sporty driving style with high cornering speeds or sudden acceleration
- driving with a very heavy or large trailer
- driving with a high load

The tyre pressure loss warning system is only an aid. It is the driver's responsibility to set the tyre pressure to the recommended cold tyre pressure suitable for the operating situation and to check it.

Be sure to also observe the following further related subjects:

- Notes on tyre pressure (→ page 351)
- Display messages about the tyres (→ page 431)

Restarting the tyre pressure loss warning system
Requirements:

- The recommended tyre pressure is correctly set for the respective operating status on all wheels.

Restart the tyre pressure loss warning system in the following situations:

- The tyre pressure has changed.
- The wheels or tyres have been changed or newly fitted.

On-board computer:

↴ Service ▸▸ Tyres

▶ Swipe downwards on Touch Control on the left-hand side of the steering wheel.
The Run Flat Indicator active Restart message is shown in the multifunction display.

▶ To begin restart, press Touch Control on the left-hand side of the steering wheel.
The Tyre pressure now OK? message is shown in the multifunction display.

▶ Select Yes.

▶ To confirm restart, press Touch Control on the left-hand side of the steering wheel.
The Run Flat Indicator restarted message is shown in the multifunction display.

After you have driven for a few minutes, the tyre pressure loss warning system monitors the set tyre pressures of all the tyres.

Be sure to also pay attention to the following related topic:

- Notes on tyre pressure (→ page 351)

Wheel change

Notes on selecting, fitting and replacing tyres

Mercedes-AMG vehicles: observe the notes in the Supplement. You could otherwise fail to recognise dangers.

⚠ **WARNING** Risk of accident due to incorrect dimensions of wheels and tyres

If wheels and tyres of the wrong size are used, the wheel brakes or wheel suspension components may become damaged.

▶ Always replace wheels and tyres with those that fulfil the specifications of the original part.

When replacing wheels, make sure to fit the correct:

- Designation
- Type

When replacing tyres, make sure to fit the correct:

- Designation
- Manufacturer
- Type

WARNING Risk of injury through exceeding the specified tyre load-bearing capacity or the permissible speed rating

Exceeding the load-bearing capacity of the tyres can lead to tyre damage and could cause the tyres to explode.

- ▶ Therefore, only use tyre types and sizes approved for your vehicle model.
- ▶ Observe the tyre load-bearing capacity rating and speed rating required for your vehicle.

NOTE Vehicle and tyre damage through tyre types and sizes that have not been approved

For safety reasons, only use tyres, wheels and accessories which have been specially approved by Mercedes-Benz for your vehicle.

These tyres are specially adapted to the control systems, such as ABS, ESP® and 4MATIC, and marked as follows:

- MO = Mercedes-Benz Original
- MOE = Mercedes-Benz Original Extended (run-flat tyres only for certain wheels)
- MO1 = Mercedes-Benz Original (only certain AMG tyres)

Certain characteristics, such as handling, vehicle noise emissions, consumption, etc. may otherwise be adversely affected. Furthermore, other tyre sizes could result in the tyres rubbing against the body and axle components when loaded. This could result in damage to the tyre or the vehicle.

Only use tyres, wheels and accessories that have been checked and recommended by Mercedes-Benz.

NOTE Risk to driving safety from retreaded tyres

Retreaded tyres are neither tested nor recommended by Mercedes-Benz, since previous damage cannot always be detected on retreaded tyres.

For this reason driving safety cannot be guaranteed.

- ▶ Do not use used tyres if you have no information about their previous usage.

NOTE Possible damage to wheels or tyres when driving over obstacles

Large wheels have a lower tyre section width. The lower the tyre section width, the greater is the risk of damage to wheels or tyres when driving over obstacles.

▶ Avoid obstacles or drive particularly carefully.

! NOTE Possible wheel and tyre damage when parking on kerbs or in potholes

Parking on kerbs or in potholes may damage the wheels and tyres.

▶ If possible, park only on flat surfaces.
▶ Avoid kerbs and potholes when parking.

! NOTE Damage to electronic component parts from the use of tyre-fitting tools

Vehicles with a tyre pressure monitoring system: electronic component parts are located in the wheel. Tyre-fitting tools should not be applied in the area of the valve.

The tools could damage the electronic component parts.

▶ Have the tyres changed at a qualified specialist workshop only.

! NOTE Damage to summer tyres at low ambient temperatures

At low ambient temperatures, tears could form when driving with summer tyres, causing permanent damage to the tyre.

▶ At temperatures below 7 °C, use M+S tyres.

Accessory parts that are not approved for your vehicle by Mercedes-Benz or are not being used correctly can impair the operating safety.

Before purchasing and using non-approved accessories, visit a qualified specialist workshop and enquire about:

- Suitability
- Legal stipulations
- Factory recommendations

⚠ WARNING Risk of accident with high performance tyres

There is an increased risk of skidding and aquaplaning when using sport tyres on wet roads.

In addition, the tyre grip is greatly reduced at a low outside temperature and tyre running temperature.

▶ Activate ESP® and adapt your driving style accordingly.
▶ Use M+S tyres at outside temperatures below 10 °C.
▶ Only use the tyres for their intended purpose.

Observe the following when selecting, fitting and replacing tyres:

- Country-specific requirements for tyre approval that define a specific tyre type for your vehicle.
- Furthermore, the use of certain tyre types in certain regions and areas of operation can be highly beneficial.
- Only use tyres and wheels of the same type (summer tyres, winter tyres, MOExtended tyres) and the same make.
- Only fit wheels of the same size on one axle (left and right).

It is only permissible to fit a different wheel size in the event of a flat tyre in order to drive to the specialist workshop.

- Do not make any modifications to the brake system, the wheels or the tyres.

  The use of shims or brake dust shields is not permitted and may invalidate the vehicle's general operating permit.
- **Vehicles with a tyre pressure monitoring system:** all fitted wheels must be equipped with functioning sensors for the tyre pressure monitoring system.
- At temperatures below 7 °C use winter tyres or all-season tyres marked M+S for all wheels.

  Winter tyres bearing the  snowflake symbol in addition to the M+S marking provide the best possible grip in wintry road conditions.
- For M+S tyres, only use tyres with the same tread.
- Observe the maximum permissible speed for the M+S tyres fitted.

  If the tyre's maximum speed is below that of the vehicle, this must be indicated by an appropriate label in the driver's field of vision.
- Run in new tyres at moderate speeds for the first 100 km.
- Replace the tyres after six years at the latest, regardless of wear.
- **When replacing with tyres that do not feature run-flat characteristics:** vehicles with MOExtended tyres are not equipped with a TIREFIT kit at the factory. Equip the vehicle with a TIREFIT kit after replacing with tyres that do not feature run-flat characteristics, e.g. winter tyres.

ⓘ You can permanently limit the maximum vehicle speed for driving with winter tyres (→ page 215).

For more information on wheels and tyres, contact a qualified specialist workshop.

Be sure to also observe the following further related subjects:

- Notes on tyre pressure (→ page 351)
- Tyre pressure table (→ page 352)
- Notes on the emergency spare wheel (→ page 365)

Notes on interchanging wheels

⚠ WARNING Risk of injury through different wheel sizes

Interchanging the front and rear wheels if the wheels or tyres have different dimensions may severely impair the driving characteristics.

The disk brakes or wheel suspension components may also be damaged.

▶ Rotate front and rear wheels only if the wheels and tyres are of the same dimensions.

Interchanging the front and rear wheels if the wheels or tyres have different dimensions can render the general operating permit invalid.

The wear patterns on the front and rear wheels differ:

- Front wheels wear more on the shoulder of the tyre
- Rear wheels wear more in the centre of the tyre

Do not drive with tyres that have too little tread depth. This significantly reduces traction on wet roads (aquaplaning).

On vehicles with the same front and rear wheel size, you can interchange the wheels every 5,000 to 10,000 km, depending on the wear. Ensure the direction of rotation is maintained for the wheels.

Observe the instructions and safety notes on "Changing a wheel" when doing so (→ page 360).

Notes on storing wheels

When storing wheels, observe the following notes:

- After removing wheels, store them in a cool, dry and preferably dark place.
- Protect the tyres from contact with oil, grease or fuel.

Overview of the tyre-change tool kit

Plug-in hybrid: be sure to observe the notes in the Supplement. You could otherwise fail to recognise dangers.

Mercedes-AMG vehicles: observe the notes in the Supplement. You could otherwise fail to recognise dangers.

Apart from some country-specific variants, vehicles are not equipped with a tyre-change tool kit. For more information on which tyre-changing tools are required and approved for performing a wheel change on your vehicle, consult a qualified specialist workshop.

You require the following tools, for example, to change a wheel:

- Jack
- Chock
- Wheel wrench
- Centring pin

ⓘ The jack weighs approximately 3.4 kg. The maximum load capacity of the jack can be found on the sticker affixed to the jack. The jack is maintenance-free. If there is a malfunction, please contact a qualified specialist workshop.

The tyre-change tool kit is located in tool bag ⓘ in the load compartment.

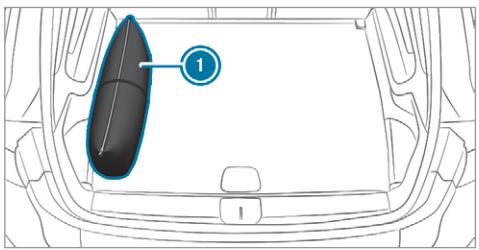

The tool bag contains:

- Jack
- Gloves
- Wheel wrench
- Centring pin

- Folding chock
- Ratchet for jack

Preparing the vehicle for a wheel change

Requirements:

- The required tyre-change tool kit is available. If your vehicle is not equipped with the tyre-change tool kit, consult a qualified specialist workshop to find out about suitable tools.
- The vehicle is not on a slope.
- The vehicle is on solid, non-slippery and level ground.

▶ Apply the electric parking brake manually.
▶ Move the front wheels to the straight-ahead position.
▶ **Vehicles with manual transmission:** engage first or reverse gear.
▶ **Vehicles with automatic transmission:** shift into position P.
▶ Switch off the engine.
▶ Make sure that the engine cannot be started.
▶ Place chocks or other suitable items under the front and rear of the wheel that is diagonally opposite the wheel you wish to change.
▶ Remove the hub caps if necessary (→ page 360).
▶ Raise the vehicle (→ page 361).

Removing and fitting hub caps

Requirements:

- The vehicle is prepared for a wheel change (→ page 360).

Vehicles with steel wheels

The wheel trim covers the wheel bolts. Before unscrewing the wheel bolts, remove the wheel trim.

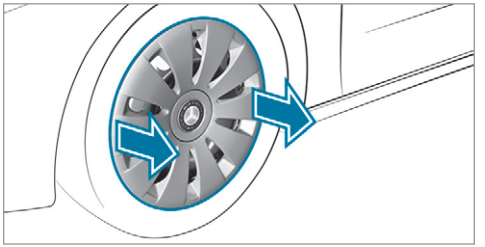

▶ **To remove:** using both hands, carefully reach into two wheel trim openings and remove the wheel trim.

Plastic hub cap

▶ **To remove:** turn the centre cover of the hub cap anti-clockwise and remove the hub cap.
▶ **To fit:** make sure that the centre cover of the hub cap is turned anti-clockwise.
▶ Position the hub cap and turn the centre cover clockwise until the hub cap engages physically and audibly.

Raising the vehicle when changing a wheel

Requirements:

- There are no persons in the vehicle.
- The vehicle has been prepared for a wheel change (⟶ page 360).
- The hub caps have been removed (⟶ page 360).

Important notes on using the jack:

- Use only a vehicle-specific jack that has been approved by Mercedes-Benz to raise the vehicle.
- The jack is only designed for raising and holding the vehicle for a short time while a wheel is being changed and not for maintenance work under the vehicle.
- The jack must be placed on a firm, flat and non-slip surface. If necessary, use a large, flat, load-bearing, non-slip underlay.
- The foot of the jack must be positioned vertically under the jack support point.

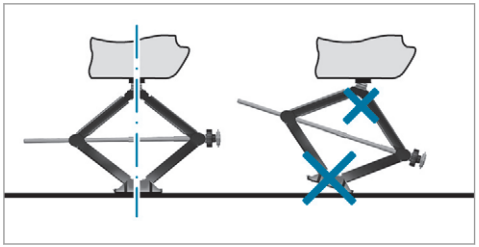

Rules of conduct when the vehicle is raised:

- Never place your hands or feet under the vehicle.
- Never lie under the vehicle.
- Do not start the engine and do not release the electric parking brake.
- Do not open or close any doors or the tailgate.

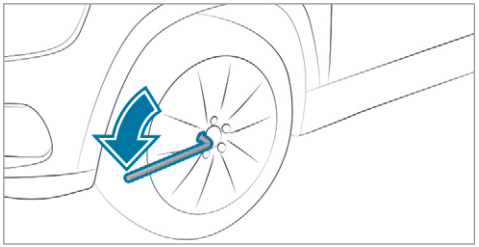

▶ Using the wheel wrench, loosen the wheel bolts on the wheel you wish to change by about one full turn. Do not unscrew the bolts completely.

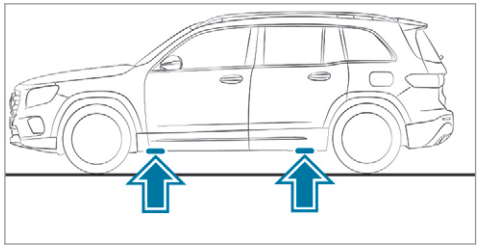

Position of jack support points

Mercedes-AMG vehicles: observe the notes in the Supplement. You could otherwise fail to recognise dangers.

⚠ WARNING Risk of injury from incorrect positioning of the jack

If you do not position the jack correctly at the appropriate jacking point of the vehicle, the jack could tip with the vehicle raised.

- Only position the jack at the appropriate jacking point of the vehicle. The base of the jack must be positioned vertically under the jacking point of the vehicle.

! NOTE Vehicle damage from the jack

If you do not position the jack correctly at the appropriate jack support point of the vehicle, the jack could tip over with the vehicle raised.

- The jack is designed exclusively for jacking up the vehicle at the jack support points.

- Take the ratchet out of the tyre-change tool kit and place it on the hexagon nut of the jack so that the letters "AUF" are visible.

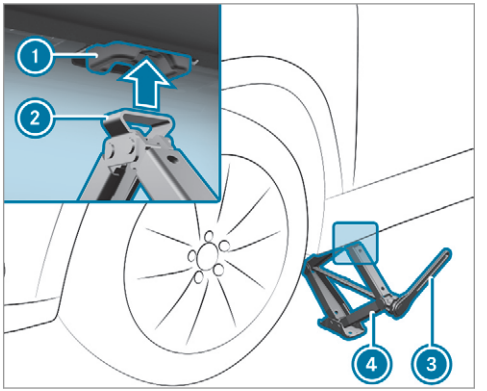

- Position jack (2) at jack support point (1).
- Turn ratchet (3) clockwise until jack (2) sits completely on jack support point (1) and the base of the jack lies evenly on the ground.
- Turn ratchet (3) until the tyre is raised a maximum of 3 cm from the ground.
- Loosen and remove the wheel (→ page 363).

Removing a wheel

Requirements:

- The vehicle is raised (→ page 361).

When changing a wheel, avoid applying any force to the brake discs, since this could impair the level of comfort when braking.

NOTE Damage to threading from dirt on wheel bolts

- Do not place wheel bolts in sand or on a dirty surface.

- Unscrew the uppermost wheel bolt completely.

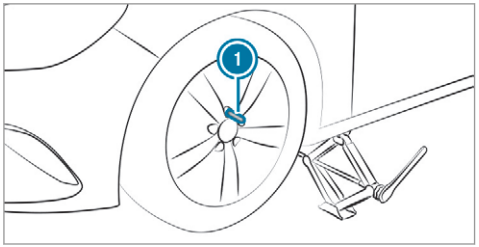

- Screw centring pin (1) into the thread instead of the wheel bolt.
- Unscrew the remaining wheel bolts completely.
- Remove the wheel and, if necessary, store it in the load compartment.
- Notes on removing an emergency spare wheel (→ page 365).

Fitting a new wheel

Requirements:

- The wheel is removed (→ page 363).

WARNING Risk of accident from losing a wheel

Oiled, greased or damaged wheel bolt/wheel nut threads or wheel hub/wheel mounting bolt threads can cause the wheel bolts/wheel nuts to come loose.

As a result, you could lose a wheel while driving.

- Never oil or grease the threads.
- In the event of damage to the threads, contact a qualified specialist workshop immediately.
- Have the damaged wheel bolts or damaged hub threads replaced.
- Do not continue driving.

- Observe the information on the choice of tyres (→ page 355).

For tyres with a specified direction of rotation, an arrow on the side wall of the tyre indicates the correct direction of rotation. Observe the direction of rotation when fitting.

- Slide the wheel to be mounted onto the centring pin and push it on.
- Notes on fitting an emergency spare wheel (→ page 365).

⚠ WARNING Risk of injury from tightening wheel bolts and nuts

If you tighten the wheel bolts or wheel nuts when the vehicle is raised, the jack could tip.

- Only tighten wheel bolts or wheel nuts when the vehicle is on the ground.

- Be sure to observe the instructions and safety notes on "Changing a wheel" (→ page 355).
- For safety reasons, only use wheel bolts which have been approved by Mercedes-Benz and for the wheel in question.
- Tighten the wheel bolts evenly in a diagonal pattern in the order indicated until they are finger-tight.
- Unscrew the centring pin.
- Tighten the last wheel bolt until it is finger-tight.
- Lower the vehicle (→ page 364).

Lowering the vehicle after a wheel change

Requirements:

- The new wheel has been fitted (→ page 363).

- **To lower the vehicle:** place the ratchet onto the hexagon nut of the jack so that the letters "AB" are visible and turn the ratchet of the jack to the left.

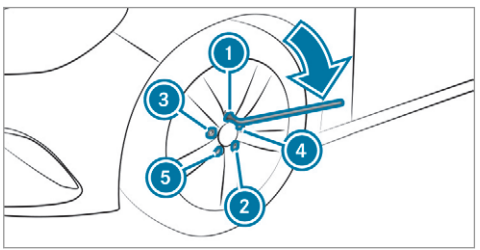

- Tighten the wheel bolts evenly in a diagonal pattern in the order indicated ① to ⑤ with a maximum of 80 Nm.
- Tighten the wheel bolts evenly in a diagonal pattern in the order indicated ① to ⑤ the specified tightening torque of 130 Nm.

⚠ WARNING Risk of injury through incorrect tightening torque

The wheels could come loose if the wheel bolts or wheel nuts are not tightened to the prescribed tightening torque.

- Ensure that the wheel bolts or nuts are tightened to the prescribed tightening torque.
- If you are not sure, do not move the vehicle. Consult a qualified specialist workshop and have the tightening torque checked immediately.

- Check the tyre pressure of the newly fitted wheel and adjust it if necessary.

- **Vehicles with tyre pressure loss warning system:** restart the tyre pressure loss warning system (→ page 355).
  Exception: the new wheel is an emergency spare wheel.
- **Vehicles with a tyre pressure monitoring system:** restart the tyre pressure monitoring system (→ page 354).
  Exception: the new wheel is an emergency spare wheel.

Emergency spare wheel

Notes on the emergency spare wheel

⚠ **WARNING** Risk of accident caused by incorrect wheel and tyre dimensions

The wheel or tyre size and the tyre type of the emergency spare wheel or spare wheel and the wheel to be replaced may differ. The emergency spare wheel or spare wheel can significantly impair driving characteristics of the vehicle.

To prevent hazardous situations:

- Drive carefully.
- Never fit more than one emergency spare wheel or spare wheel that differs in size.
- Only use an emergency spare wheel or spare wheel briefly.
- Do not deactivate ESP®.
- Have the emergency spare wheel or spare wheel of a different size replaced at the nearest qualified specialist workshop. The new wheel must have the correct dimensions.

ⓘ The deflated emergency spare wheel is secured in the emergency spare wheel bag in the load compartment and is secured to the adjustable load compartment floor in the lower position.

Observe the following notes on removing an emergency spare wheel:

- Before stowing the emergency spare wheel, make sure there is no air left in the tyre.
  If necessary, allow the air to escape.
- **To release air from the tyre:** remove the valve cap of the tyre.
- Press down the metal insert in the valve using a pointed object, e.g. a pen.
- Screw the valve cap onto the valve.

Observe the following notes on fitting an emergency spare wheel:

- Check the tyre pressure of the emergency spare wheel fitted. Correct the pressure as necessary.
- The maximum permissible speed with an emergency spare wheel fitted is 80 km/h.
- Do not fit the emergency spare wheel with snow chains.
- Replace the emergency spare wheel after six years at the latest, regardless of wear.

ⓘ **Vehicles with a tyre pressure loss warning system:** if an emergency spare wheel is fitted, the tyre pressure loss warning system cannot function reliably. Only restart the system again when the emergency spare wheel has been replaced with a new wheel.

Vehicles with a tyre pressure monitoring system: if an emergency spare wheel is fitted, the tyre pressure monitoring system cannot function reliably. For a few minutes after an emergency spare wheel is fitted, the system may still display the tyre pressure of the removed wheel. Only restart the system again when the emergency spare wheel has been replaced with a new wheel.

Be sure to also observe the following further related subjects:

- Notes on tyre pressure (→ page 351)
- Tyre pressure table (→ page 352)
- Notes on fitting tyres (→ page 355)

Inflating the emergency spare wheel

NOTE Overheating due to the tyre inflation compressor running too long

▶ Do not run the tyre inflation compressor for longer than ten minutes without interruption.

Requirements:

Comply with the manufacturer's safety notes on the sticker of the emergency spare wheel and on the tyre inflation compressor.

▶ Remove sticker with the label 80 km/h from the tyre inflation compressor housing and affix it to the instrument cluster within the driver's field of vision.

▶ Remove the tyre inflation compressor from the stowage space under the luggage compartment floor . (→ page 332)

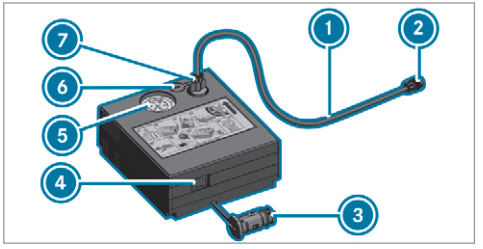

▶ Pull filler hose 1 and plug 3 out of the tyre inflation compressor housing.

▶ Insert plug 7 of filler hose 1 in the socket on the tyre inflation compressor and then turn it until plug 7 engages.

▶ Unscrew the cap from the valve on the emergency spare wheel.

▶ Screw union nut 2 of filler hose 1 onto valve .

▶ Make sure on and off switch 4 of the tyre inflation compressor is set to **0**.

▶ Insert plug 3 in a socket in your vehicle.

- Cigarette lighter socket
- 12 V socket: (→ page 131)

- Observe the notes on the cigarette lighter.
- Observe the notes on sockets: (→ page 131)

▶ Press the start/stop button once to switch on the power supply. (→ page 167)

▶ Press On/Off switch 4 on the tyre inflation compressor to **I**.
The tyre inflation compressor is switched on. The tyre is inflated. The tyre pressure is shown on manometer 5.

- Pump the tyre to the specified tyre pressure.

ⓘ The specified tyre pressure is stated on the label of the emergency spare wheel.

- When the specified tyre pressure has been reached, press on and off switch (4) on the tyre inflation compressor to **0**.
  The tyre inflation compressor is switched off.
- Press the start/stop button to switch off the power supply.
- If the tyre pressure is higher than the specified pressure, press pressure release valve button (6) until the correct tyre pressure has been reached.
- Unscrew union nut (2) of filler hose (1) from the valve.
- Screw the valve cap of the emergency spare wheel onto the valve again.
- Stow filler hose (1) and plug (3) in the lower section of the tyre inflation compressor housing.
- Stow the tyre inflation compressor in the vehicle.

Notes on technical data

Mercedes-AMG vehicles: be sure to observe the notes in the Supplement. Otherwise, you may fail to recognise dangers.

The technical data was determined in accordance with EU Directives. The data stated only applies to vehicles with standard equipment. You can obtain further information from a Mercedes-Benz Service Centre.

Only for certain countries: you can find vehicle-specific vehicle data in the EC-Certificate of Conformity (CERTIFICATE OF CONFORMITY). These documents are delivered with your vehicle.

On-board electronics

Notes on tampering with the engine electronics

NOTE Premature wear through improper maintenance

Improper maintenance may cause vehicle components to wear more quickly and the vehicle's operating permit may be invalidated.

- Always have work on the engine electronics and related components carried out at a qualified specialist workshop.

Two-way radios

Notes on fitting two-way radios

WARNING Risk of accident due to improper work on two-way radios

If two-way radios are manipulated or retrofitted incorrectly, the electromagnetic radiation from the two-way radios can interfere with the vehicle electronics and jeopardise the operating safety of the vehicle.

- You should have all work on electrical and electronic components carried out at a qualified specialist workshop.

WARNING Risk of accident from incorrect operation of two-way radios

If you operate two-way radios incorrectly in the vehicle, the electromagnetic radiation could interfere with the on-board electronics, forexample, if:

- the tow-way radio is not connected to an exterior aerial
- if the exterior aerial is not correctly mounted or is not of low reflection

This could jeopardise the operating safety of the vehicle.

- Have the low-reflection exterior aerial fitted at a qualified specialist workshop.

- When operating two-way radios in the vehicle, always connect them to the low-reflection exterior aerial.

! NOTE Invalidation of the operating permit due to failure to comply with the instructions for installation and use

The operating permit may be invalidated if the instructions for installation and use of two-way radios are not observed.

- Only use approved frequency bands.
- Observe the maximum permissible output power in these frequency bands.
- Only use approved aerial positions.

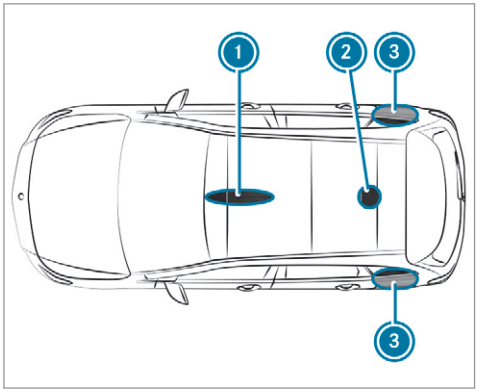

1. Front roof area
2. Rear roof area
3. Rear wings

On vehicles with a panoramic sliding sunroof, fitting an aerial to the front or rear roof area is not permitted.

On the rear wings, it is recommended that you fit the aerial on the side of the vehicle closest to the centre of the road.

Use Technical Specification ISO/TS 21609 (Road Vehicles – "EMCs for installation of aftermarket radio frequency transmitting equipment") when retrofitting two-way radios. Comply with the legal requirements for detachable parts.

If your vehicle has fittings for two-way radio equipment, use the power supply and aerial connectors provided in the pre-installation. Observe the manufacturer's supplements when fitting.

Two-way radio transmission output

The maximum transmission output (PEAK) at the base of the aerial must not exceed the values in the following table.

Frequency band and maximum transmission output

Frequency band	Maximum transmission output
Short wave 3 - 54 MHz	100 W
4 m frequency band 74 - 88 MHz	30 W
2 m frequency band 144 - 174 MHz	50 W
Terrestrial Trunked Radio (TETRA) 380 - 460 MHz	10 W
70 cm frequency band 420 - 450 MHz	35 W
Two-way radio (2G/3G/4G)	10 W

The following can be used in the vehicle without restrictions:

- two-way radios with a maximum transmission output of up to 100 mW
- RF transmitters with transmitter frequencies in the 380 - 410 MHz frequency band and a maximum transmission output of up to 2 W (trunked radio system/Tetra)
- mobile phones (2G/3G/4G)

There are no restrictions when positioning the aerial on the outside of the vehicle for some wavebands.

- Terrestrial Trunked Radio (TETRA)
- 70 cm frequency band
- 2G/3G/4G

Vehicle identification plate, VIN and engine number overview

Vehicle identification plate

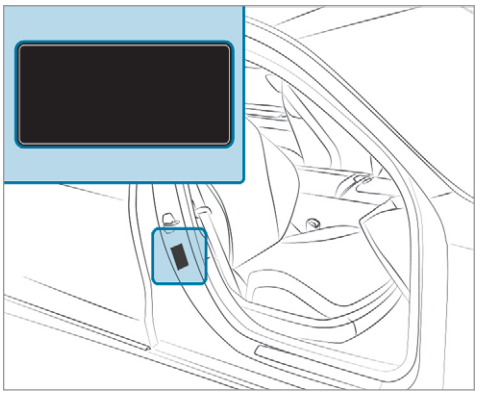

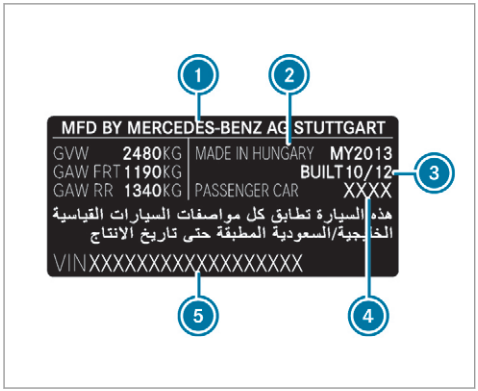

Vehicle identification plate (example: Kuwait)

1. Vehicle manufacturer
2. Place of manufacture
3. Manufacturing date
4. Vehicle model
5. VIN

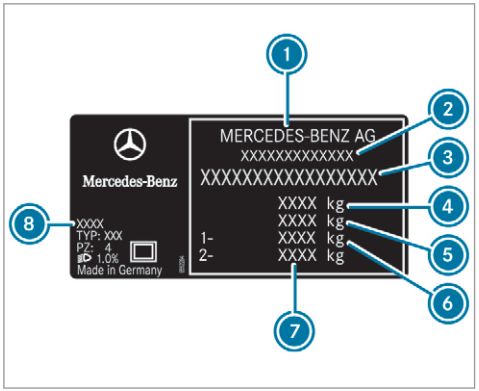

Vehicle identification plate (example: all other countries)

1. Vehicle manufacturer
2. EU general operating permit number (only for certain countries)
3. VIN (vehicle identification number)
4. Maximum permissible gross vehicle weight (kg)
5. Maximum permissible gross weight of vehicle combination (kg) (only for specific countries)
6. Maximum permissible front axle load (kg)
7. Maximum permissible rear axle load (kg)
8. Paint code

ⓘ The data shown in the illustration is example data.

VIN and engine number

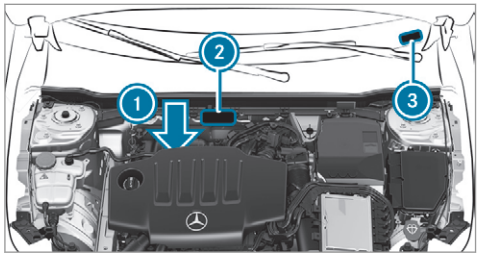

1. Engine number stamped into the crankcase
2. VIN (vehicle identification number) stamped into the crossmember
3. VIN (vehicle identification number) as a label at the lower edge of the windscreen

The VIN as a label at the lower edge of the windscreen 3 is only available in some countries. Further information can be obtained at a qualified specialist workshop.

Operating fluids

Notes on operating fluids

Mercedes-AMG vehicles: be sure to observe the notes in the Supplement. You could otherwise fail to recognise dangers.

⚠ **WARNING** Risk of injury from operating fluids harmful to your health

Operating fluids may be poisonous and harmful to your health.

- ▶ Observe the text on the original containers when using, storing or disposing of operating fluids.
- ▶ Always store operating fluids sealed in their original containers.
- ▶ Always keep children away from operating fluids.

ENVIRONMENTAL NOTE Environmental pollution caused by environmentally irresponsible disposal

- ▶ Dispose of operating fluids in an environmentally responsible manner.

Operating fluids include the following:

- fuels
- DeNOx agent AdBlue® for exhaust gas aftertreatment
- lubricants
- coolant
- brake fluid
- windscreen washer fluid
- climate control system refrigerant

Only use products approved by Mercedes-Benz. Damage caused by the use of products that have not been approved is not covered by the Mercedes-Benz warranty or goodwill gestures.

You can identify operating fluids approved by Mercedes-Benz by the following inscriptions on the container:

- MB-Freigabe (e.g. MB-Freigabe 229.51)
- MB-Approval (e.g. MB-Approval 229.51)

Further information on approved operating fluids is available at the following locations:

- in the Mercedes-Benz Specifications for Operating Fluids by entering the designation
  - at https://bevo.mercedes-benz.com
  - in the Mercedes-Benz BeVo app
- at a qualified specialist workshop

⚠ WARNING Risk of fire or explosion from fuel

Fuels are highly flammable.

- ▶ Fire, naked flames, smoking and creation of sparks must be avoided.
- ▶ Switch off the ignition and, if available, the stationary heater, before and while refuelling the vehicle.

⚠ WARNING Risk of injury from fuels

Fuels are poisonous and hazardous to your health.

- ▶ Do not swallow fuel or let it come into contact with skin, eyes or clothing.
- ▶ Do not inhale fuel vapour.
- ▶ Keep children away from fuel.
- ▶ Keep doors and windows closed during the refuelling process.

If you or other people come into contact with fuel, observe the following:

- ▶ Immediately rinse fuel off your skin with soap and water.
- ▶ If fuel comes into contact with your eyes, immediately rinse them thoroughly with clean water. Seek medical attention immediately.
- ▶ If you swallow fuel, seek medical attention immediately. Do not induce vomiting.
- ▶ Change immediately out of clothing that has come into contact with fuel.

Fuel

Information on fuel grades for vehicles with petrol engines

Observe the notes on operating fluids (→ page 372).

! NOTE Damage caused by the wrong fuel

Even small amounts of the wrong fuel could result in damage to the fuel system, the engine and the emission control system.

- ▶ Only refuel using unleaded, sulphur-free fuel that conforms to European EN 228, or an equivalent specification.

Fuel of this specification may contain up to 10% ethanol by volume. Your vehicle is suitable for use with E10 fuel.

Never refuel with one of the following fuels:

- diesel
- regular petrol with an octane number lower than 91 RON
- petrol with more than 10 vol.% ethanol e.g. E15, E20, E85, E100
- petrol with more than 3% methanol by volume, e.g. M15, M30
- petrol with additives containing metal

If you have accidentally refuelled with the wrong fuel:

▶ do not switch the ignition on.

▶ Consult a qualified specialist workshop.

The following compatibility indications for fuel apply to your vehicle:

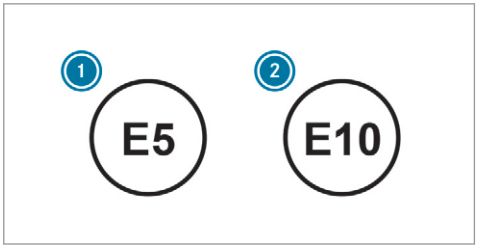

① For petrol with maximum 5% ethanol by volume

② For petrol with maximum 10% ethanol by volume

According to European standard EN 16942 you can find the compatibility indications at the following locations:

- on the vehicle on the information label on the fuel filler flap (→ page 189).
- on the fuel pump or pump nozzle suitable for your vehicle throughout Europe.

If the available fuel is not sufficiently low in sulphur, this can produce unpleasant odours.

The recommended octane number for your vehicle can also be found on the information label in the fuel filler flap (→ page 189).

As a temporary measure, if the recommended fuel is not available, you may also use regular unleaded petrol with at least 91 RON. This may reduce engine output and increase fuel consumption.

Never refuel using petrol with an even lower RON.

Further information on fuel can be obtained at a filling station or a qualified specialist workshop.

Information on additives in petrol

Observe the notes on operating fluids (→ page 372).

NOTE Damage from use of unsuitable additives

Even small amounts of the wrong additive may lead to malfunctions occurring.

▶ Only add cleaning additives recommended by Mercedes-Benz to the fuel.

Mercedes-Benz recommends that you use fuel brands that have additives.

In some countries, the fuel available may not have sufficient additives. Residue could build up in the fuel injection system as a result. In this case, in consultation with a Mercedes-Benz service centre, the fuel may be mixed with the cleaning additive recommended by Mercedes-Benz. Be sure to observe the notes and mixing ratios specified on the container.

Information on fuel grades for vehicles with a diesel engine

General notes

Observe the notes on operating fluids (→ page 372).

⚠ WARNING Risk of fire from fuel mixture

If you mix diesel fuel with petrol, the flash point of the fuel mixture is lower than that of pure diesel fuel.

- ▶ Never refuel using petrol in diesel engines.
- ▶ Never mix petrol with diesel fuel.

! NOTE Damage caused by the wrong fuel

Even small amounts of the wrong fuel could result in damage to the fuel system, the engine and the emission control system.

- ▶ Only refuel using sulphur-free diesel fuel that conforms to European standard EN 590, or an equivalent specification.
  In countries without sulphur-free diesel fuel, refuel using only low-sulphur diesel fuel with a sulphur content less than 50 ppm.

Never refuel with one of the following fuels:

- petrol
- marine diesel
- heating oil
- pure bio-diesel fuel or vegetable oil
- paraffin or kerosene

If you have accidentally refuelled with the wrong fuel:

- ▶ Do not switch the ignition on.
- ▶ Consult a qualified specialist workshop.

The following compatibility indication for fuel applies to your vehicle:

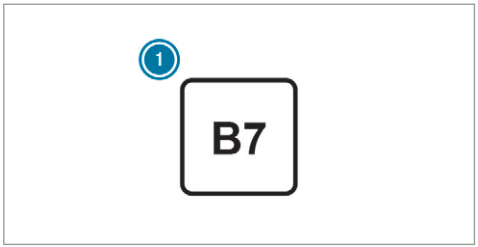

① For diesel fuel with a maximum of 7% by volume bio-diesel (fatty acid methyl ester)

According to European standard EN 16942 you can find the compatibility indications at the following locations:

- on the vehicle on the information label in the fuel filler flap (→ page 189)
- on the fuel pump or pump nozzle suitable for your vehicle throughout Europe

Information on low outside temperatures
Refuel your vehicle with as much winter diesel fuel as possible at the beginning of winter.

Before changing over to winter diesel fuel, the fuel tank should be empty, if possible. When first refuelling with winter diesel fuel, only refuel using a small amount, e.g. to reserve level. The fuel tank can be filled as usual when next refuelling.

Further information on fuel can be obtained at a filling station or a qualified specialist workshop.

Tank content and reserve fuel

Model	Total capacity
GLB 200 4MATIC GLB 200 d 4MATIC GLB 220 d 4MATIC GLB 250 4MATIC	60.0 litres
All other models	52.0 litres
Model	**of which reserve fuel**
All models	6.0 litres

AdBlue®

Notes on AdBlue®
Observe the notes on operating fluids (→ page 372).

AdBlue® is a water-soluble fluid for the NOx exhaust gas aftertreatment of diesel engines.

It may be improper or punishable in some countries to operate a vehicle that uses no AdBlue® or one that does not comply with the specifications of these operating instructions.

! NOTE Malfunctions due to the dilution of AdBlue® or the use of additive-enhanced AdBlue®

The function of the NOx exhaust gas aftertreatment can be impaired by the use of unsuitable denoxification agents.

- ▶ Only use AdBlue® in accordance with ISO 22241.
- ▶ Do not dilute AdBlue® with water.
- ▶ Do not use additive-enhanced AdBlue®.

! NOTE Damage and malfunctions due to impurities in AdBlue®

Consequences of impurities in AdBlue®:

- increased emission values
- damage to the catalytic converter
- NOx exhaust gas aftertreatment malfunctions

▶ Avoid impurities in AdBlue®.

AdBlue® residues crystallise after a period of time, and contaminate the surfaces with which they come into contact. Clean the dirty surfaces with water as soon as possible.

When you open the AdBlue® tank, small amounts of ammonia vapour may escape. Do not inhale any ammonia vapours that may be released. Only fill the AdBlue® tank in well-ventilated areas.

AdBlue® filling capacity and consumption

Model	Total capacity
All models	23.8 litres

AdBlue® consumption

The average AdBlue® consumption is between 1% and 5% of fuel consumption. Like fuel consumption, AdBlue® consumption is highly dependent upon driving style and operating conditions. For this reason, your vehicle's actual consumption figures under day-to-day operating conditions may differ from the consumption figures calculated. The frequency at which you will have to top up AdBlue® will also vary. Have the AdBlue® supply checked at a qualified specialist workshop before making journeys outside of Europe. Before a longer stay outside of Europe, consult a qualified specialist workshop.

AdBlue® range and fill level

The AdBlue® fill level and range can be displayed via the on-board computer. The AdBlue® range shown depends strongly on the driving style and operating conditions. The actual range can therefore deviate from the range currently displayed in the on-board computer. The information supplied in the Owner's Manual regarding the reserve quantity at the first display warning and on the minimum top-up quantity when the fuel tank is empty is also to be understood as guide values.

Engine oil

Notes on engine oil

Observe the notes on operating fluids (→ page 372).



! **NOTE** Engine damage caused by an incorrect oil filter, incorrect oil or additives

▶ Do not use engine oils or oil filters which do not correspond to the specifications explicitly prescribed for the service intervals.

- ▶ Do not alter the engine oil or oil filter in order to achieve longer change intervals than prescribed.
- ▶ Do not use additives.
- ▶ Have the engine oil renewed at regular intervals.

Mercedes-Benz recommends that you have the oil change carried out at a qualified specialist workshop.

Only use engine oils approved by Mercedes-Benz.

Petrol engines: for certain countries, different engine oils can be used in conjunction with reduced maintenance intervals.

ⓘ Further information on different engine oils can be obtained at a qualified specialist workshop.

Quality and capacity of engine oil

Petrol engines	MB-Freigabe or MB-Approval
GLB 250 GLB 250 4MATIC	229.71*
All other models	229.51, 229.52, 229.61 229.71*

Diesel engines	MB-Freigabe or MB-Approval
All models	229.52, 229.61 229.71*

* recommended for lowest possible fuel consumption (lowest SAE viscosity class in each case; observe possible restrictions of the approved SAE viscosity classes)

To achieve the lowest possible fuel consumption, it is recommended to use the engine oil specifications marked in the table for the lowest SAE viscosity class. Possible restrictions of the approved SAE viscosity classes must be observed.

ⓘ If the engine oils listed in the table are not available, you may add a maximum of 1.0 litre of the following engine oils once only.

Engine oils for one-time filling only in exceptional cases:

- **vehicles with a petrol engine:** MB-Freigabe or MB-Approval 229.31 or ACEA C3
- **vehicles with a diesel engine:** ACEA C3

The following values refer to an oil change, including the oil filter.

Model	Capacity
GLB 180 GLB 200 GLB 200 4MATIC	5.1 litres
GLB 250 GLB 250 4MATIC	5.5 litres
All other models	6.8 litres

Notes on brake fluid

Observe the notes on operating fluids (→ page 372).

⚠ WARNING Risk of an accident due to vapour pockets forming in the brake system

The brake fluid constantly absorbs moisture from the air. This lowers the boiling point of the brake fluid. If the boiling point is too low, vapour pockets may form in the brake system when the brakes are applied hard. This impairs the braking effect.

- Have the brake fluid renewed at the specified intervals.

Have the brake fluid regularly replaced at a qualified specialist workshop.
Only use a brake fluid approved by Mercedes-Benz according to MB-Freigabe or MB-Approval 331.0.

Coolant

Notes on coolant
Observe the notes on operating fluids (→ page 372).

⚠ WARNING Risk of fire- and injury from antifreeze

If antifreeze comes into contact with hot component parts in the engine compartment, it may ignite.

- Allow the engine to cool down before you top up the antifreeze.
- Make sure that no antifreeze spills out next to the filler opening.
- Thoroughly clean the antifreeze from component parts before starting the vehicle.

! NOTE Damage caused by incorrect coolant

- Only add coolant that has been premixed with the required antifreeze protection.

Information on coolant is available at the following locations:

- in the Mercedes-Benz Specifications for Operating Fluids 310.1
  - at https://bevo.mercedes-benz.com
  - in the Mercedes-Benz BeVo App
- at a qualified specialist workshop

NOTE Overheating at high outside temperatures

If an inappropriate coolant is used, the engine cooling system is not sufficiently protected against overheating and corrosion at high outside temperatures.

- Always use coolant approved by Mercedes-Benz.
- Observe the instructions in the Mercedes-Benz Specifications for Operating Fluids 310.1.

Have the coolant regularly replaced at a qualified specialist workshop.

The proportion of corrosion inhibitor/antifreeze concentrate in the engine cooling system should be:

- a minimum of 50% (antifreeze protection down to approximately -37 °C)
- a maximum of 55% (antifreeze protection down to -45 °C)

Notes on windscreen washer fluid

Observe the notes on operating fluids (→ page 372).

WARNING - Risk of fire and injury due to windscreen washer concentrate

Windscreen washer concentrate is highly flammable. It could ignite if it comes into contact with hot engine component parts or the exhaust system.

- Make sure that no windscreen washer concentrate spills out next to the filler opening.

NOTE Damage to the exterior lighting due to unsuitable windscreen washer fluid

Unsuitable windscreen washer fluids may damage the plastic surface of the exterior lighting.

- Only use windscreen washer fluids which are also suitable for use on plastic surfaces, e.g. MB SummerFit or MB WinterFit.

NOTE Blocked spray nozzles caused by mixing windscreen washer fluids

- Do not mix MB SummerFit and MB WinterFit with other windscreen washer fluids.

Do not use distilled or de-ionised water as the fill level sensor may be triggered erroneously.

Recommended windscreen washer fluid:

- Above freezing point: e.g. MB SummerFit
- Below freezing point: e.g. MB WinterFit

For the correct mixing ratio, refer to the information on the antifreeze container.

Mix the washer fluid with the windscreen washer fluid all year round.

Vehicle data

Vehicle dimensions

The heights specified may vary as a result of the following factors:

- tyres
- load
- condition of the suspension
- optional equipment

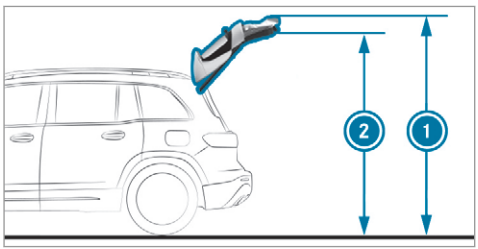

Height when opened and headroom

Model	1 Height when opened	2 Headroom
All models	2082 mm	1929 mm

Vehicle dimensions

All models	
Vehicle length	4634 mm
Vehicle width including outside mirrors	2020 mm
Vehicle width excluding outside mirrors	1834 mm
Vehicle height	1659 mm
Wheelbase	2829 mm

Weights and loads

Please observe the following notes for the specified vehicle data:

- Items of optional equipment increase the unladen weight and reduce the payload.
- Vehicle-specific weight information can be found on the vehicle identification plate (→ page 370).

Model	Maximum roof load
All models	75 kg

Off-road driving

Angle of approach/departure

The specified values are maximum values for vehicles that are ready to drive – fuel tank full, all fluids topped up, with driver. The values depend on the vehicle tyres and vehicle weight.

Observe the notes on driving in mountainous terrain (→ page 175).

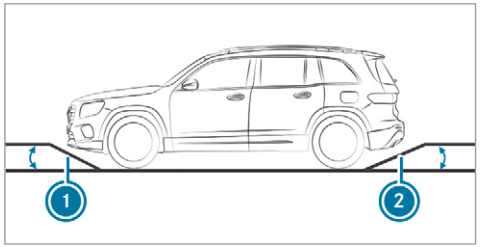

Model	① Front	② Rear
All models	19.4°	24.8°

Maximum gradient climbing ability
The vehicle's gradient climbing ability depends on the weight distribution in the vehicle, the terrain conditions and the road surface conditions.

The specified value applies in the following cases:

- the vehicle is ready to drive – fuel tank full, all fluids topped up, driver in the vehicle
- the road surface conditions and thus traction are good

A gradient climbing ability of 100% corresponds to an incline of 45°.

Observe the notes on driving in mountainous terrain (→ page 175).

Missing values were not available at the time of going to press.

Model	Maximum gradient climbing ability
All models	

Trailer hitch

General notes on the trailer hitch

Modifications to the engine cooling system may be necessary, depending on the vehicle model. The retrofitting of a trailer hitch is only permissible if a towing capacity is specified in your vehicle documents.

Further information can be obtained at a qualified specialist workshop.

Mounting dimensions of the trailer hitch

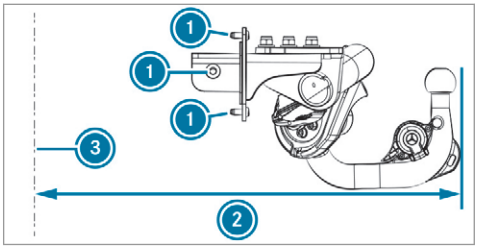

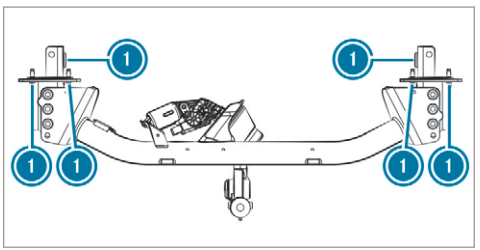

① Fastening points
② Overhang dimension
③ Rear axle centre line

The overhang dimension and fastening points are valid for a trailer hitch installed at the factory.

Overhang dimension

Model	(2) Overhang dimension
All models	1010 mm

Towing capacity

The tongue weight is not included in the towing capacity.

Missing values were not available at the time of going to press.

Towing capacity, braked (at a minimum start-off gradeability of 8%)

Model	Towing capacity, braked
GLB 180 GLB 180 d, automatic transmission	1800 kg
GLB 180 d, manual transmission GLB 200 d, manual transmission	
All other models	2000 kg

Towing capacity, braked (at a minimum start-off gradeability of 12%)

Model	Towing capacity, braked
GLB 180 GLB 180 d	1600 kg
GLB 180 d, manual transmission GLB 200 d, manual transmission	
GLB 200 GLB 200 4MATIC GLB 200 d, automatic transmission	1800 kg
All other models	2000 kg

Towing capacity, unbraked

Model	Towing capacity, unbraked
GLB 180 d, manual transmission GLB 200 d, manual transmission	
All other models	750 kg

Maximum tongue weight and load capacity

NOTE Damage caused by the trailer coming loose

If the tongue weight used is too low, the trailer may come loose.

- The tongue weight must not be below 50 kg.
- Use a tongue weight that is as close as possible to the maximum permissible tongue weight.

NOTE Damage caused by the bicycle rack coming loose

When using a bicycle rack, both the maximal tongue weight and the maximal load capacity should be observed.

- Do not exceed the permissible load capacity.

Observe the additional notes on load capacity (→ page 262).

Tongue weight

Model	Maximum tongue weight
All models	100 kg

Missing values were not available at the time of going to press.

Load capacity

Model	Maximum load
All models	

Permissible rear axle load (trailer operation)

Missing values were not available at the time of going to press.

Model	Axle load
GLB 180	1040 kg
GLB 180 d 4MATIC	1195 kg
GLB 200	1035 kg
GLB 180 d, manual transmission GLB 200 d, manual transmission	
GLB 180 d, automatic transmission GLB 200 d, automatic transmission	1060 kg
GLB 200 4MATIC	1085 kg
GLB 200 d 4MATIC GLB 220 d 4MATIC	1200 kg

Model	Axle load
GLB 220 d	1165 kg
GLB 250	1130 kg
GLB 250 4MATIC	1170 kg

Display messages

Introduction

Information about display messages

Display messages appear on the multifunction display.

Display messages with graphic symbols are simplified in the Owner's Manual and may differ from the symbols on the multifunction display. The multifunction display shows high-priority display messages in red. Certain display messages are accompanied by a warning tone.

Please act in accordance with the display messages and follow the additional notes in the Owner's Manual.

For some display messages, a symbol will also be shown:

- ⓘ Further information
- × Hide display message

With the left-hand Touch Control, you can select the respective symbol by swiping to the left or right. Press the ⓘ symbol to show further information on the multifunction display. Press the × symbol to hide the display message.

You can hide low-priority display messages by pressing the button or the left-hand Touch Control. The display messages will then be stored in the message memory.

Rectify the cause of a display message as quickly as possible.

High-priority display messages cannot be hidden. The multifunction display shows these display messages continuously until the cause of the display message has been rectified.

Calling up saved display messages

On-board computer:

Service ▸▸ 1 message

If there are no display messages, No messages will appear on the multifunction display.

- Scroll through the display messages by swiping upwards or downwards on the left-hand Touch Control.
- **To exit the message memory:** press the button.

Occupant safety

Display messages	Possible causes/consequences and ▶ Solutions
 Restraint sys. malfunction Consult workshop	* The restraint system is malfunctioning (→ page 37). **⚠ WARNING** Risk of injury due to malfunctions in the restraint system Components in the restraint system may be activated unintentionally or not deploy as intended in an accident. ▶ Have the restraint system checked and repaired immediately at a qualified specialist workshop.
 Front left malfunction Consult workshop (example)	* The corresponding restraint system is malfunctioning (→ page 37). **⚠ WARNING** Risk of injury due to malfunctions in the restraint system Components in the restraint system may be activated unintentionally or not deploy as intended in an accident. ▶ Have the restraint system checked and repaired immediately at a qualified specialist workshop.
 Left windowbag malfunction Consult workshop (example)	* The corresponding window airbag is malfunctioning (→ page 37). **⚠ WARNING** Risk of injury or fatal injury due to a malfunction in the windowbag The windowbag might be triggered unintentionally or might not be triggered at all in the event of an accident. ▶ Have the windowbag checked and repaired immediately at a qualified specialist workshop.

Display messages	Possible causes/consequences and ▶ Solutions
Front-passenger airbag disabled See Owner's Manual	* The front passenger airbag has been disabled even though an adult or a person with an adult stature is on the front passenger seat. If additional forces are applied to the seat, the weight the system detects may be too low. **⚠ WARNING** - Risk of injury or even fatal injury when the front passenger airbag is disabled If the front passenger airbag is disabled, It will not be deployed in the event of an accident and cannot perform its intended protective function. A person in the front passenger seat could then, for example, come into contact with the vehicle interior, especially if the person is sitting too close to the dashboard. ▶ Be aware of the status of the front passenger airbag both before and during the journey. ▶ Stop the vehicle immediately in accordance with the traffic conditions. ▶ Check the status of the automatic front passenger airbag actuation (→ page 46). ▶ If necessary, consult a qualified specialist workshop immediately.
Front-passenger airbag enabled See Owner's Manual	* The front passenger airbag is enabled while the vehicle is in motion: • even when a child, a small adult or an object weighing less than the system weight threshold is located on the front passenger seat • even when the front passenger seat is not occupied The system may detect objects or forces that are adding to the weight applied to the seat.

Display messages	Possible causes/consequences and ▶ Solutions
	⚠ **WARNING** Risk of injury or fatal injury when using a child restraint system while the front passenger airbag is enabled If you secure a child in a child restraint system on the front passenger seat and the front passenger airbag is enabled, the front passenger airbag may deploy in the event of an accident. The child could be struck by the airbag. ▶ Both before and during the journey, ensure that the status of the front passenger airbag is correct. NEVER use a rearward facing child restraint on a seat protected by an ACTIVE AIRBAG in front of it, DEATH or SERIOUS INJURY to the child can occur. ▶ Stop the vehicle immediately in accordance with the traffic conditions. ▶ Check the status of the automatic front passenger airbag actuation (→ page 46). ▶ If necessary, consult a qualified specialist workshop immediately.
PRE-SAFE inoperative See Owner's Manual	* The PRE-SAFE® functions are malfunctioning. ▶ Consult a qualified specialist workshop.

Key

Display messages	Possible causes/consequences and ▶ Solutions
 Replace key See Owner's Manual	* **Vehicles with a digital vehicle key :** only a few or no authorisations remain for starting the engine. ▶ Make sure that the internet connection is not restricted by certain mobile phone settings. ▶ Open Mercedes me connect https://www.mercedes.me and call up the Digital Vehicle Key service. ▶ Deactivate the service first and then activate it again. ▶ If the display message still appears, contact the Mercedes-Benz Customer Assistance Center (CAC). * **Vehicles with a digital vehicle key sticker:** only a few or no authorisations remain for starting the engine. ▶ Order a new digital vehicle key sticker from a Mercedes-Benz Service Centre or at the https://www.mercedes-benz-mobile.com/.
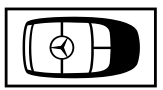 Replace key	* The key needs to be replaced. ▶ Consult a qualified specialist workshop.
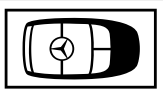 Change key batteries	* The key battery is discharged. ▶ Replace the battery (→ page 76).

Display messages	Possible causes/consequences and ▶ Solutions
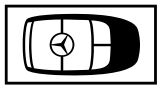 Key not detected (white display message)	* The key is currently undetected. ▶ Change the location of the key in the vehicle. ▶ If the key is still not recognised, place it in the slot for starting with the key (→ page 169).
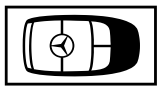 Key not detected (red display message)	* The key cannot be detected and may no longer be in the vehicle. The key is no longer in the vehicle and you switch off the engine: • You can no longer start the engine. • You cannot centrally lock the vehicle. ▶ Ensure that the key is in the vehicle. If the key detection function has a malfunction due to a strong radio signal source: ▶ Stop the vehicle immediately in accordance with the traffic conditions. ▶ Place the key in the slot for starting the engine with the key (→ page 169).
Place the key in the marked space See Owner's Manual	* Key detection is malfunctioning. ▶ Change the location of the key in the vehicle. ▶ Place the key in the slot for starting the engine with the key (→ page 169).

Lights

Display messages	Possible causes/consequences and ▶ Solutions
 Left dipped beam (example)	* The corresponding light source is defective. ▶ Drive on carefully. ▶ Consult a qualified specialist workshop immediately. or ▶ Check whether you are permitted to replace the light source yourself (→ page 148). ⓘ LED light sources: the display message for the corresponding light appears only when all the light-emitting diodes in the light are faulty.
 Malfunction See Owner's Manual	* The exterior lighting is malfunctioning. ▶ Consult a qualified specialist workshop. * **Vehicles with a trailer hitch:** a fuse may have blown. ▶ Stop the vehicle in accordance with the traffic conditions. ▶ Check the fuses and replace them if necessary (→ page 346).
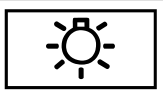 Automatic driving lights inoperative	* The light sensor is malfunctioning. ▶ Consult a qualified specialist workshop.

Display messages	Possible causes/consequences and ▶ Solutions
 Active Light System inoperative	* The active headlamps are malfunctioning. ▶ Consult a qualified specialist workshop.
 Switch on headlamps	* You are driving without low-beam headlamps. ▶ Turn the light switch to the ≡D or AUTO position.
 Switch off lights	* You are leaving the vehicle and the lights are still switched on. ▶ Turn the light switch to the AUTO position.
 Intelligent Light System inoperative	* The Intelligent Light System is malfunctioning. The lighting system continues to function properly without the functions of the Intelligent Light System. ▶ Consult a qualified specialist workshop.

Display messages	Possible causes/consequences and ▶ Solutions
Adaptive Highbeam Assist currently unavailable See Owner's Manual	* Adaptive Highbeam Assist is temporarily unavailable. The system limits have been reached (⟶ page 143). ▶ Drive on. Once the cause of the problem is no longer present, the system will be available again. The Adaptive Highbeam Assist available again display message will appear.
Adaptive Highbeam Assist inoperative	* Adaptive Highbeam Assist is malfunctioning. ▶ Consult a qualified specialist workshop.
Adaptive Highbeam Assist Plus currently unavailable See Owner's Manual	* Adaptive Highbeam Assist Plus is temporarily unavailable. The system limits have been reached (⟶ page 144). ▶ Drive on. Once the cause of the problem is no longer present, the system will be available again. The Adaptive Highbeam Assist Plus available again display message will appear.
Adaptive Highbeam Assist Plus inoperative	* Adaptive Highbeam Assist Plus is malfunctioning. ▶ Consult a qualified specialist workshop.
Hazard warning lamps malfunctioning	* The hazard warning lamp switch is malfunctioning. ▶ Consult a qualified specialist workshop.

Climate control

Display messages	Possible causes/consequences and ▶ Solutions
 inoperative See Owner's Man.	* The stationary heater is temporarily malfunctioning. ▶ When the vehicle is stationary on a level surface and the engine has cooled down, make up to four attempts to switch on the stationary heater, waiting several minutes between each attempt. ▶ If the stationary heater does not switch on, consult a qualified specialist workshop.
 inoperative Battery low	* The on-board electrical system voltage is too low. The stationary heater has switched itself off. ▶ Drive an extended distance until the battery has reached a sufficient charge level again.
 inoperative Refuel vehicle	* There is too little fuel in the fuel tank. The stationary heater cannot be switched on. ▶ Refuel the vehicle.

Vehicle

Display messages	Possible causes/consequences and ▶ Solutions
 Vehicle is operational Switch off ignition before exiting	* You are leaving the vehicle when it is in a ready-to-drive state. ▶ When you leave the vehicle, switch off the ignition, secure the vehicle against rolling away and take the key with you. ▶ If you do not leave the vehicle, switch off the electrical consumers, e.g. the seat heating. Otherwise, the 12 V battery may discharge and it will then be possible to start the vehicle only with the aid of a second battery (starting assistance).
 Operation only possible in transmission position N	* **Vehicles with manual transmission:** you attempted to swivel the ball neck and the transmission is not in neutral N. ▶ Shift the transmission to neutral N.
 Check trailer hitch lock (white display message)	* The trailer hitch is not operational during a journey with a trailer. ⚠ **WARNING** Risk of an accident if the ball neck is not locked The trailer may become detached. ▶ Stop the vehicle immediately in accordance with the traffic conditions. Do not continue driving. ▶ Uncouple the trailer and secure it against rolling away. ▶ Initiate a new swivel movement and do not re-couple the trailer until the warning/indicator lamp goes out.

Display messages	Possible causes/consequences and ▶ Solutions
	▶ Initiate a new swivel movement and, at the same time, pull and hold the button on the tailgate until the ball neck engages beneath the bumper (→ page 258). ▶ When the display message disappears, couple up the trailer and drive on. If the display message does not disappear, the trailer hitch is malfunctioning and the ball neck is not locked. ▶ Do not couple up the trailer. Drive on without the trailer. Note the reduced ground clearance due to the unlocked ball neck. ▶ Consult a qualified specialist workshop. * The trailer hitch will not be operational when the vehicle is stationary. ▶ Uncouple the coupled trailer and secure it against rolling away. ▶ **If the ball neck is retracted:** initiate a new swivel movement and, at the same time, pull and hold the button on the tailgate until the ball neck engages vertically in the locked position and then engages beneath the bumper (→ page 258). ▶ **If the ball neck is extended:** pull and hold the button on the tailgate until the ball neck engages beneath the bumper. If the display message does not disappear, the trailer hitch is malfunctioning and the ball neck is not locked. ▶ Do not couple up the trailer. Drive on without the trailer. Note the reduced ground clearance due to the unlocked ball neck. ▶ Consult a qualified specialist workshop.

Display messages	Possible causes/consequences and ▶ Solutions
 Steering malfunction Increased physical effort See Owner's Manual	* The power steering assistance is malfunctioning. **⚠ WARNING** Risk of an accident due to altered steering characteristics If the power assistance of the steering fails partially or completely, you will need to use more force to steer. ▶ If safe steering is possible, drive on carefully. ▶ Visit or consult a qualified specialist workshop immediately.
 Steering malfunction Stop immediately See Owner's Manual	* The steering is malfunctioning. Steering capability is significantly impaired. **⚠ WARNING** Risk of accident if steering capability is impaired If the steering does not function as intended, the vehicle's operating safety is jeopardised. ▶ Pull over and stop the vehicle safely as soon as possible, paying attention to road and traffic conditions. Do not continue driving under any circumstances. ▶ Consult a qualified specialist workshop.
 Steering malfunction See Owner's Manual	* The electric steering lock is malfunctioning. The steering may be locked by the electric steering lock. **⚠ WARNING** Risk of accident if steering capability is impaired If the steering does not function as intended, the vehicle's operating safety is jeopardised.

Display messages	Possible causes/consequences and ▶ Solutions
	▶ Pull over and stop the vehicle safely as soon as possible, paying attention to road and traffic conditions. Do not continue driving under any circumstances. ▶ Consult a qualified specialist workshop. ▶ Stop the vehicle immediately in accordance with the traffic conditions. Do not continue driving. ▶ Consult a qualified specialist workshop.
 Before starting the engine, turn the steering wheel.	* The electric steering lock could not unlock the steering. ▶ Switch the ignition off. ▶ To unlock the steering, move the steering wheel slightly to the left and right. ▶ Switch the ignition back on.
Active bonnet malfunction See Owner's Manual	* The active bonnet (pedestrian protection) is malfunctioning or inoperative after having already been triggered. ▶ Consult a qualified specialist workshop.
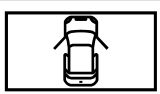	* At least one door is open. ▶ Close all doors.
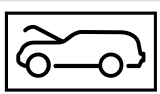	* The bonnet is open.

Display messages	Possible causes/consequences and ▶ Solutions
	⚠ WARNING Risk of accident due to driving with the bonnet unlocked The bonnet may open and block your view. ▶ Never release the bonnet when driving. ▶ Before every trip, ensure that the engine bonnet is locked. ▶ Stop the vehicle immediately, paying attention to road and traffic conditions. ▶ Close the bonnet.
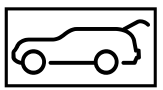	* The tailgate is open. **⚠ DANGER** Risk of exhaust gas poisoning Combustion engines emit poisonous exhaust gases such as carbon monoxide. Exhaust gases can enter the vehicle interior if the tailgate is open when the engine is running, especially if the vehicle is in motion. ▶ Always switch off the engine before opening the tailgate. ▶ Never drive with the tailgate open. ▶ Close the tailgate.
Anti-theft alarm system Malfunction	* The anti-theft alarm system is malfunctioning. ▶ Consult a qualified specialist workshop.

Display messages	Possible causes/consequences and ▶ Solutions
 2nd seat row, left Not locked	* The left-hand seat or the seat backrest in the second row of seats is not engaged. ▶ Fold the corresponding seat backrest back until it engages and push the row of seats back (→ page 105). ▶ Make sure that the seat is engaged (→ page 105).
 2nd seat row, right Not locked	* The right-hand seat or the seat backrest in the second row of seats is not engaged. ▶ Fold the corresponding seat backrest back until it engages and push the row of seats back (→ page 105). ▶ Make sure that the seat is engaged (→ page 105).
 Top up washer fluid	* The washer fluid level in the washer fluid reservoir has dropped below the minimum. ▶ Top up the washer fluid (→ page 320).

Engine

Display messages	Possible causes/consequences and ▶ Solutions
To switch off the engine, press the Start/Stop button for at least 3 seconds or 3 times.	* You have pressed the start/stop button while the vehicle is in motion. ▶ Information about switching off the engine while driving (→ page 168).
 Top up coolant See Owner's Manual	* The coolant level is too low. **! NOTE** Engine damage due to insufficient coolant ▶ Avoid long journeys with insufficient coolant. ▶ Add coolant (→ page 319). ▶ Have the engine cooling system checked at a qualified specialist workshop.
 Coolant Stop vehicle Switch engine off	* The coolant is too hot. ▶ Stop the vehicle immediately in accordance with the traffic conditions and switch off the engine. **⚠ WARNING** Danger of burns when opening the bonnet If you open the engine bonnet when the engine has overheated or during a fire in the engine compartment, you could come into contact with hot gases or other escaping operating fluids. ▶ Before opening the bonnet, allow the engine to cool down.

Display messages	Possible causes/consequences and ▶ Solutions
	▶ In the event of a fire in the engine compartment, keep the engine bonnet closed and call the fire service. ▶ Wait until the engine has cooled down. ▶ Make sure that the air supply to the radiator is not obstructed. ▶ Avoiding high loads on the engine, drive to the nearest qualified specialist workshop. In doing so, ensure that the coolant temperature display remains below 120 °C.
	* The fan motor is defective. ▶ Avoiding high loads on the engine, drive to the nearest qualified specialist workshop. In doing so, ensure that the coolant temperature display remains below 120 °C.
 Reserve fuel level	* The fuel supply has dropped into the reserve range. ▶ Refuel.
 Clean the fuel filter	* **Vehicles with diesel engines:** the fuel filter is dirty or the water in the fuel filter needs to be drained. ▶ Consult a qualified specialist workshop.

Display messages	Possible causes/consequences and ▶ Solutions
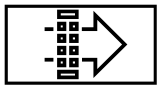 Replace air cleaner	* **Vehicles with diesel engines:** the engine air filter is dirty and must be replaced. ▶ Consult a qualified specialist workshop.
Drive system Malfunction Visit workshop	* The drive system is malfunctioning. ▶ Consult a qualified specialist workshop.
Drive system Malfunction Stop Switch engine off	* The drive system is malfunctioning. ▶ Stop the vehicle immediately in accordance with the traffic conditions and switch off the engine. ▶ Consult a qualified specialist workshop.

Transmission

Display messages	Possible causes/consequences and ▶ Solutions
Only select Park (P) when vehicle is stationary	* Park position P can be engaged only when the vehicle is stationary. ▶ To stop, depress the brake pedal. ▶ Shift the transmission to park position P while the vehicle is stationary.
Apply brake to deselect Park (P) position	* You have attempted to shift the transmission out of park position P and into another transmission position. ▶ Depress the brake pedal.

Display messages	Possible causes/consequences and ▶ Solutions
	▶ Select transmission position D, R or neutral N.
To shift out of P or N, depress brake and start engine	* You have attempted to shift the transmission out of park position P or neutral N and into another transmission position. ▶ Depress the brake pedal. ▶ Change the transmission position. ▶ Start the engine.
Apply brake to select D or R	* You have attempted to select transmission position D or R. ▶ Depress the brake pedal. ▶ Select transmission position D or R.
Apply brake to select R	* You have attempted to select transmission position R. ▶ Depress the brake pedal. ▶ Select transmission position R.
Risk of vehicle rolling Driver door open and transmission not in P	* The driver's door is not fully closed and transmission position D, R or neutral N is selected. ▶ Select park position P when switching off the vehicle.
N permanently active Risk of vehicle rolling	* While the vehicle is rolling or while you are driving, neutral N has been engaged. ▶ To stop, depress the brake pedal. ▶ Shift the transmission to park position P while the vehicle is stationary.

Display messages	Possible causes/consequences and ▶ Solutions
	▶ To continue driving, select transmission position D or R.
Without changing gear, consult workshop	* The transmission is malfunctioning. The transmission position can no longer be changed. ▶ When transmission position D is selected, consult a qualified specialist workshop and do not change the transmission position. ▶ For all other transmission positions, park the vehicle safely. ▶ Consult a qualified specialist workshop.
Reversing not poss. Consult workshop	* The transmission is malfunctioning. The transmission position R cannot be selected. ▶ Consult a qualified specialist workshop.
Transmission Malfunction Stop	* The transmission is malfunctioning. The transmission shifts to neutral N automatically. ▶ Stop the vehicle immediately in accordance with the traffic conditions. ▶ Depress the brake pedal. ▶ Engage park position P. ▶ Consult a qualified specialist workshop.
Auxiliary battery malfunction	* The auxiliary battery for the transmission is no longer being charged. ▶ Consult a qualified specialist workshop. ▶ Until then, always select park position P manually before you switch off the engine. ▶ Before leaving the vehicle, apply the electric parking brake.

Display messages	Possible causes/consequences and ▶ Solutions
Transmission Malfunction	* The transmission is malfunctioning. The cause could be an overheated clutch or blocked gears. ▶ Let the transmission cool down. ▶ If the display message still appears following a restart, consult a qualified specialist workshop.
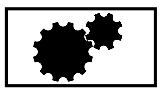 Trans. oil overheated Drive on with care	* The transmission is overheating. When the display message is active, start-up and driving characteristics may be temporarily impaired. ▶ Drive at low engine speed. ▶ Avoid sporty driving. ▶ Before pulling away on uphill gradients, let the transmission cool down until the display message disappears.
Parking lock inoperative Apply the parking brake	* The transmission is malfunctioning. The park position P cannot be selected. ▶ Park the vehicle safely. ▶ Use the electric parking brake to secure the vehicle against rolling away.
Teaching in transmission Operate selector lever Brake for XX seconds Risk of vehicle rolling	* The transmission is being taught in. There is a risk of the vehicle rolling. ▶ Depress and hold the brake pedal until the teach-in process has been completed. The electric parking brake is also applied automatically during the teach-in process. ▶ Switch on the ignition. ▶ Select park position P, transmission position R or neutral N.

Display messages	Possible causes/consequences and ▶ Solutions
Risk of vehicle rolling away Apply parking brake See Owner's Manual	* The transmission position cannot be reliably identified. ▶ Use the electric parking brake to secure the vehicle against rolling away.
Teaching in transmission complete	* The transmission's teach-in process is complete. All transmission positions can be selected again.
Transmission Malfunction Visit workshop	* The transmission is malfunctioning. Consult a qualified specialist workshop.
Depress clutch fully to start engine	* You have attempted to start the engine without depressing the clutch pedal. ▶ Depress the clutch pedal and then start the engine. * The engine has stalled while the vehicle was pulling away, e.g. because the clutch pedal was released too quickly. ▶ Depress the clutch pedal again. The engine will start automatically. ▶ Slowly release the clutch pedal to pull away.
Clutch overheated Avoid pulling away until the warning goes out	* The clutch is under considerable load and is overheating. Avoid frequent pulling away and driving at walking pace over longer distances. ▶ Stop the vehicle, paying attention to road and traffic conditions, and leave the engine running. The clutch will cool more quickly when the engine is running. or

Display messages	Possible causes/consequences and ▶ Solutions
	▶ If possible, continue driving at a steady speed and remove your foot from the clutch pedal. Do not let the clutch drag. The clutch will cool while the vehicle is in motion. When the clutch has cooled down, the display message will disappear.

Brakes

Display messages	Possible causes/consequences and ▶ Solutions
 Parking brake See Owner's Manual	* The yellow (P) indicator lamp is lit. The electric parking brake is malfunctioning. **To apply:** ▶ Switch the ignition off and switch it back on. ▶ Apply the electric parking brake manually (→ page 200). If it is not possible to apply the electric parking brake: ▶ Consult a qualified specialist workshop. ▶ Where necessary, also secure the parked vehicle against rolling away. * The yellow (P) indicator lamp and the red (P) indicator lamp are lit. The electric parking brake is malfunctioning. **To release:**

Display messages	Possible causes/consequences and ▶ Solutions
	▶ Switch the ignition off and switch it back on. ▶ Release the electric parking brake manually (→ page 200). or ▶ Release the electric parking brake automatically (→ page 200). If it is still not possible to release the electric parking brake: ▶ Do not continue driving. Consult a qualified specialist workshop.
	* The yellow (P) indicator lamp is lit and the red (P) indicator lamp is flashing. The electric parking brake is malfunctioning. The electric parking brake could not be applied or released. ▶ Switch the ignition off and switch it back on. **To apply:** ▶ Release and then apply the electric parking brake manually (→ page 200). **To release:** ▶ Apply and then release the electric parking brake manually. If it is not possible to apply the electric parking brake or the red (P) indicator lamp continues to flash: ▶ Do not continue driving. Consult a qualified specialist workshop. ▶ Where necessary, also secure the parked vehicle against rolling away.

Display messages	Possible causes/consequences and ▶ Solutions
	* The yellow (P) indicator lamp is lit and the red (P) indicator lamp flashes for approximately ten seconds after the electric parking brake has been applied or released. It then remains lit or goes out. The electric parking brake is malfunctioning. **If the charge level is too low:** ▶ Charge the 12 V battery. **To apply:** ▶ Switch the ignition off. The electric parking brake will be applied automatically. If the electric parking brake is not to be applied, e.g. at an automatic car wash or when the vehicle is being towed, leave the ignition switched on. This does not include having the vehicle towed with the rear axle raised. If the electric parking brake is not applied automatically: ▶ Switch the ignition off and switch it back on. ▶ Release and then apply the electric parking brake manually (→ page 200). If it is still not possible to apply the electric parking brake: ▶ Consult a qualified specialist workshop. ▶ Where necessary, also secure the parked vehicle against rolling away. **To release:**

Display messages	Possible causes/consequences and ▶ Solutions
	▶ If the conditions for automatic release are fulfilled and the electric parking brake is not released automatically, release the electric parking brake manually (→ page 200). If it is still not possible to release the electric parking brake: ▶ Do not continue driving. Consult a qualified specialist workshop.
 Release parking brake	* The red (P) indicator lamp is flashing. The electric parking brake is applied while you are driving: • A condition for automatic release of the electric parking brake has not been fulfilled (→ page 200). • You are performing emergency braking using the electric parking brake (→ page 201). ▶ Check the conditions for automatic release of the electric parking brake. ▶ Release the electric parking brake manually.
 Turn on the ignition to release the parking brake	* The red (P) indicator lamp is lit. You have attempted to release the electric parking brake with the ignition switched off. ▶ Switch on the ignition.
Risk of vehicle rolling away Parking brake not applied See Owner's Manual	* **Vehicles with manual transmission:** the electric parking brake has not been applied and you open the driver's door. ▶ Apply the electric parking brake.

Display messages	Possible causes/consequences and ▶ Solutions
 Brake immediately	* **Vehicles with manual transmission:** a malfunction has occurred while the HOLD function was activated. A horn may also sound at regular intervals. If you attempt to lock the vehicle, the horn will become louder. You cannot start the engine. ▶ Immediately depress the brake pedal firmly until the display message disappears. You can restart the engine.
 Check brake fluid level	* There is insufficient brake fluid in the brake fluid reservoir. ⚠ **WARNING** Risk of an accident due to low brake fluid level If the brake fluid level is too low, the braking effect and the braking characteristics may be impaired. ▶ Stop the vehicle as soon as possible, paying attention to road and traffic conditions. Do not continue driving. ▶ Consult a qualified specialist workshop. ▶ Do not top up the brake fluid.
 Check brake pads See Owner's Manual	* The brakepads have reached the wear limit. ▶ Consult a qualified specialist workshop.

Driving systems

Display messages	Possible causes/consequences and ▶ Solutions
 ATTENTION ASSIST inoperative	* ATTENTION ASSIST is malfunctioning. ▶ Consult a qualified specialist workshop.
 ATTENTION ASSIST: Take a break!	* ATTENTION ASSIST has detected fatigue or an increasing lack of concentration on the part of the driver (→ page 247). ▶ If necessary, take a break.
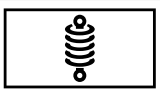 Fault Drive at max. 80 km/h	* The adjustable damping is malfunctioning. The vehicle's handling characteristics may be affected. ▶ Do not drive at speeds greater than 80 km/h. ▶ Consult a qualified specialist workshop.
Active Steering Assist currently unavailable See Owner's Manual	* Active Steering Assist is temporarily unavailable. The ambient conditions are outside the system limits (→ page 224).

Display messages	Possible causes/consequences and ▶ Solutions
	▶ Drive on. As soon as the ambient conditions are within the system limits, the system will become available again. ▶ If necessary, clean the windscreen in the camera's field of vision. ▶ Check the tyre pressure if necessary.
Active Steering Assist inoperative	* Active Steering Assist is malfunctioning. Active Distance Assist DISTRONIC remains available. ▶ Consult a qualified specialist workshop.
	* Active Steering Assist has reached the system limits(→ page 224). You have not steered independently for a considerable period of time. ▶ Take over the steering and drive on in accordance with the traffic conditions.
Beginning emergency stop	* Your hands are not on the steering wheel. An emergency stop is being initiated (→ page 227). ▶ Put your hands back on the steering wheel. You can cancel the deceleration at any time by performing one of the following actions: • Steering • Depressing the brake or accelerator pedal • Pressing a steering-wheel button • Operating Touch Control • Deactivating Active Distance Assist DISTRONIC

Display messages	Possible causes/consequences and ▶ Solutions
Active Steering Assist currently unavailable due to multiple emergency stops	* Active Steering Assist is temporarily unavailable due to multiple emergency stops. ▶ Take over the steering and stop in accordance with the traffic conditions. ▶ Switch the ignition off and switch it back on. Active Steering Assist is available once more.
Active Lane Keeping Assist currently unavailable See Owner's Manual	* Active Lane Keeping Assist is temporarily unavailable. The ambient conditions are outside the system limits (⟶ page 255). ▶ Drive on. As soon as the ambient conditions are within the system limits, the system will become available again.
Active Lane Keeping Assist inoperative	* Active Lane Keeping Assist is malfunctioning. ▶ Consult a qualified specialist workshop.
Blind Spot Assist currently unavailable See Owner's Manual	* Blind Spot Assist is temporarily unavailable. The system limits have been reached (⟶ page 252). ▶ Drive on. Once the cause of the problem is no longer present, the system will be available again. or ▶ If the display message does not disappear, stop the vehicle in accordance with the traffic conditions and restart the engine.
Blind Spot Assist inoperative	* Blind Spot Assist is malfunctioning. ▶ Consult a qualified specialist workshop.

Display messages	Possible causes/consequences and ▶ Solutions
Blind Spot Assist not available when towing a trailer See Owner's Manual	* When you establish the electrical connection to the trailer, Blind Spot Assist is unavailable. ▶ Press the left-hand Touch Control and acknowledge the display message.
Active Blind Spot Assist currently unavailable See Owner's Manual	* Active Blind Spot Assist is temporarily unavailable. The system limits have been reached (→ page 252). ▶ Drive on. Once the cause of the problem is no longer present, the system will be available again. or ▶ If the display message does not disappear, stop the vehicle in accordance with the traffic conditions and restart the engine.
Active Blind Spot Assist inoperative	* Active Blind Spot Assist is malfunctioning. ▶ Consult a qualified specialist workshop.
Active Blind Spot Assist not available when towing a trailer See Owner's Manual	* When you establish the electrical connection to the trailer, Active Blind Spot Assist is unavailable. ▶ Press the left-hand Touch Control and acknowledge the display message.
Active Parking Assist and PARKTRONIC inoperative See Owner's Manual	* Active Parking Assist and Parking Assist PARKTRONIC are malfunctioning. ▶ Stop the vehicle in accordance with the traffic conditions and restart the engine. ▶ If the display message still appears, consult a qualified specialist workshop.

Display messages	Possible causes/consequences and ▶ Solutions
Traffic Sign Assist currently unavailable See Owner's Manual	* Traffic Sign Assist is temporarily unavailable. ▶ Drive on. Once the cause of the problem is no longer present, the system will be available again.
Traffic Sign Assist inoperative	* Traffic Sign Assist is malfunctioning. ▶ Stop the vehicle in accordance with the traffic conditions and restart the engine. ▶ If the display message still appears, consult a qualified specialist workshop.
Speed Limit Assist currently unavailable See Owner's Manual	* Speed Limit Assist is temporarily unavailable. ▶ Drive on. Once the cause of the problem is no longer present, the system will be available again.
Speed Limit Assist inoperative	* Speed Limit Assist is malfunctioning. ▶ Consult a qualified specialist workshop.

Display messages	Possible causes/consequences and ▶ Solutions
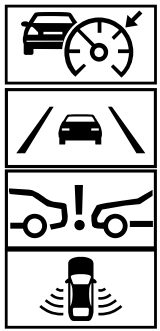 Currently unavailable Radar sensors dirty	* The radar sensor system is malfunctioning. Possible causes: • dirt on the sensors • heavy rain or snow • extended country driving without other traffic, e.g. in the desert Driving systems and driving safety systems may be malfunctioning or temporarily unavailable. Once the cause of the problem is no longer present, the driving systems and driving safety systems will be available again. If the display message does not disappear: ▶ Stop the vehicle in accordance with the traffic conditions. ▶ Clean all sensors (→ page 325). ▶ Restart the engine.

Display messages	Possible causes/consequences and ▶ Solutions
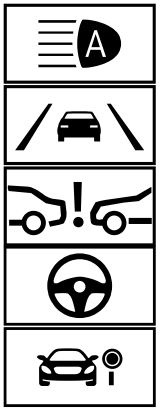 Currently unavailable Camera view restricted	* The camera view is restricted. Possible causes: • Dirt on the windscreen in the camera's field of vision • Heavy rain, snow or fog • Mist on the windscreen in front of the camera ⓘ Mist detected on the windscreen will be automatically removed using a built-in heater within approximately 12 minutes. Driving systems and driving safety systems may be malfunctioning or temporarily unavailable. Once the cause of the problem is no longer present, the driving systems and driving safety systems will be available again. If the display message does not disappear: ▶ Stop the vehicle in accordance with the traffic conditions. ▶ Clean the windscreen if necessary.
 Off	* The HOLD function is deactivated because the vehicle is slipping or a condition for activation is not fulfilled. ▶ Reactivate the HOLD function later or check the activation conditions for the HOLD function (→ page 228).

Display messages	Possible causes/consequences and ▶ Solutions
 inoperative	* The Downhill Speed Regulation is malfunctioning. ▶ Consult a qualified specialist workshop.
 Not in curr. drive prog.	* The Downhill Speed Regulation is not available in the currently selected drive program. ▶ Change the drive program (→ page 179).
 Max. speed 40 km/h	* The maximum speed of 40 km/h for the Downhill Speed Regulation has been exceeded. ▶ Drive more slowly.
 - - - km/h	* Active Distance Assist DISTRONIC cannot be activated as not all activation conditions are fulfilled. ▶ Comply with the activation conditions of Active Distance Assist DISTRONIC (→ page 219).

Display messages	Possible causes/consequences and ▶ Solutions
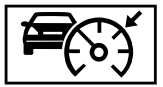 suspended	* If you depress the accelerator pedal beyond the Active Distance Assist DISTRONIC setting, the system will switch to passive mode (→ page 217).
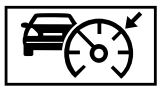 Off	* Active Distance Assist DISTRONIC was deactivated. If a warning tone also sounds, Active Distance Assist DISTRONIC has deactivated automatically (→ page 219).
Active Distance Assist currently unavailable See Owner's Manual	* Active Distance Assist DISTRONIC is temporarily unavailable. The ambient conditions are outside the system limits (→ page 217). ▶ Drive on. As soon as the ambient conditions are within the system limits, the system will become available again.
Active Distance Assist inoperative	* Active Distance Assist DISTRONIC is malfunctioning. Other driving systems and driving safety systems may also be malfunctioning. ▶ Consult a qualified specialist workshop.
Active Distance Assist available again	* Active Distance Assist DISTRONIC is operational again and can be activated (→ page 219).

Display messages	Possible causes/consequences and ▶ Solutions
 --- km/h	* Cruise control cannot be activated as not all activation conditions are fulfilled. ▶ Observe the activation conditions for cruise control (→ page 214).
Cruise control inoperative	* Cruise control is malfunctioning. ▶ Consult a qualified specialist workshop.
Cruise control and Limiter inoperative	* Cruise control and the limiter are malfunctioning. ▶ Consult a qualified specialist workshop.
Cruise control off	* Cruise control has been deactivated. If there is an additional warning tone, cruise control has been deactivated automatically (→ page 213).
Limiter passive	* If you depress the accelerator pedal beyond the pressure point (kickdown), the limiter is switched to passive mode (→ page 214).
 --- km/h	* The limiter cannot be activated as not all activation conditions have been fulfilled. ▶ Observe the activation conditions of the limiter (→ page 214).
Limiter inoperative	* The limiter is malfunctioning. ▶ Consult a qualified specialist workshop.

Display messages	Possible causes/consequences and ▶ Solutions
Speed limit (winter tyres) XXX km/h	* You have reached the maximum permissible stored speed for winter tyres. It is not possible to exceed this speed.
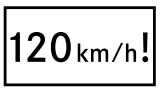 Maximum speed exceeded	* You have exceeded the maximum permissible speed (for certain countries only). ▶ Drive more slowly.

Driving safety systems

Display messages	Possible causes/consequences and ▶ Solutions
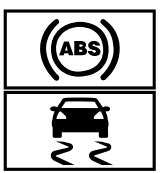 currently unavailable See Owner's Manual	* ABS and ESP® are temporarily unavailable. Other driving systems and driving safety systems (e.g. BAS) may also be temporarily unavailable. The brake system will continue to operate normally. Braking distance may increase in an emergency braking situation. **⚠ WARNING** Risk of skidding if ABS and ESP® are malfunctioning The wheels may block during braking and ESP® does not perform any vehicle stabilization. The steerability and braking characteristics are heavily impaired and the braking distance may increase. In addition, other driving safety systems are switched off.

Display messages	Possible causes/consequences and ▶ Solutions
	▶ Drive on carefully. ▶ Have ABS and ESP® checked immediately at a qualified specialist workshop. ▶ Drive carefully on a suitable stretch of road, making slight steering movements at a speed above 30 km/h. ▶ If the display message does not disappear, consult a qualified specialist workshop immediately. Drive carefully.
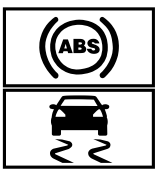 inoperative See Owner's Manual	* ABS and ESP® are malfunctioning. Other driving systems and driving safety systems (e.g. BAS) may also be malfunctioning. The brake system will continue to operate normally. Braking distance may increase in an emergency braking situation. ⚠ **WARNING** Risk of skidding if ABS and ESP® are malfunctioning The wheels may block during braking and ESP® does not perform any vehicle stabilization. The steerability and braking characteristics are heavily impaired and the braking distance may increase. In addition, other driving safety systems are switched off. ▶ Drive on carefully. ▶ Have ABS and ESP® checked immediately at a qualified specialist workshop.

Display messages	Possible causes/consequences and ▶ Solutions
 currently unavailable See Owner's Manual	* ESP® is temporarily unavailable. Other driving systems and driving safety systems (e.g. BAS) may also be malfunctioning. **⚠ WARNING** Risk of skidding if ESP® is malfunctioning If ESP® is malfunctioning, ESP® cannot carry out vehicle stabilisation. In addition, other driving safety systems are switched off. ▶ Drive on carefully. ▶ Have ESP® checked at a qualified specialist workshop. ▶ Drive carefully on a suitable stretch of road, making slight steering movements at a speed above 30 km/h. ▶ If the display message does not disappear, consult a qualified specialist workshop immediately. Drive carefully.
 inoperative See Owner's Manual	* ESP® is malfunctioning. Other driving systems and driving safety systems (e.g. BAS) may also be malfunctioning. The brake system will continue to operate normally. Braking distance may increase in an emergency braking situation. **⚠ WARNING** Risk of skidding if ESP® is malfunctioning If ESP® is malfunctioning, ESP® cannot carry out vehicle stabilisation. In addition, other driving safety systems are switched off.

Display messages	Possible causes/consequences and ▶ Solutions
	▶ Drive on carefully. ▶ Have ESP® checked at a qualified specialist workshop.
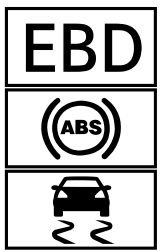 inoperative See Owner's Manual	* EBD, ABS and ESP® are malfunctioning. Other driving systems and driving safety systems (e.g. BAS) may also be malfunctioning. ⚠ **WARNING** Risk of skidding if EBD, ABS and ESP® are malfunctioning The wheels may block during braking and ESP® does not perform any vehicle stabilization. The steerability and braking characteristics are heavily impaired and the braking distance may increase. In addition, other driving safety systems are switched off. ▶ Drive on carefully. ▶ Have the brake system checked immediately at a qualified specialist workshop.
Active Brake Assist Functions currently limited See Owner's Manual	* **Vehicles with the Driving Assistance Package:** Active Brake Assist with cross-traffic function, Evasive Steering Assist or PRE-SAFE® PLUS are temporarily unavailable or only partially available. **Vehicles without the Driving Assistance Package:** Active Brake Assist is temporarily unavailable or only partially available. The ambient conditions are outside the system limits (→ page 208).

Display messages	Possible causes/consequences and ▶ Solutions
	▶ Drive on. As soon as the ambient conditions are within the system limits, the system will become available again. ▶ If the display message does not disappear, stop the vehicle in accordance with the traffic conditions and restart the engine.
Active Brake Assist Functions limited See Owner's Manual	* **Vehicles with Driving Assistance Package:** Active Brake Assist with cross-traffic function, Evasive Steering Assist or PRE-SAFE® PLUS is malfunctioning. **Vehicles without Driving Assistance Package:** Active Brake Assist is malfunctioning. ▶ Consult a qualified specialist workshop.

Mercedes me connect

Display messages	Possible causes/consequences and ▶ Solutions
Mercedes me connect Services limited See Owner's Manual	* The vehicle functions for fault detection are restricted. At least one of the main functions of the Mercedes me connect system is malfunctioning. ▶ Observe the notes on the diagnostics connection (→ page 30). ▶ Consult a qualified specialist workshop.

Display messages	Possible causes/consequences and ▶ Solutions
 Inoperative	* At least one of the main functions of the Mercedes me connect system or of the SOS emergency call system is malfunctioning. ▶ Consult a qualified specialist workshop.

Battery

Display messages	Possible causes/consequences and ▶ Solutions
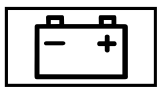 12 V battery See Owner's Manual	* The engine is off and the charge level is too low. ▶ Switch off electrical consumers that are not required. To charge the battery: ▶ Leave the engine running for a few minutes, or drive an extended distance. * If the message appears while the engine is running, this indicates an on-board electrical system malfunction. ▶ Consult a qualified specialist workshop.
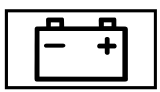 See Owner's Manual	* The battery is not being charged. **NOTE** Possible engine damage if you continue driving ▶ Do not continue driving under any circumstances.

Display messages	Possible causes/consequences and ▶ Solutions
	▶ Consult a qualified specialist workshop. ▶ Stop the vehicle immediately, paying attention to road and traffic conditions, and switch off the engine. ▶ Consult a qualified specialist workshop.
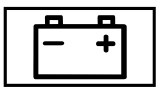 Stop vehicle See Owner's Manual	* The battery is no longer being charged and the charge level is too low. ! **NOTE** Possible engine damage if you continue driving ▶ Do not continue driving under any circumstances. ▶ Consult a qualified specialist workshop. ▶ Stop the vehicle immediately in accordance with the traffic conditions. Do not continue driving. ▶ Switch off the engine. ▶ Consult a qualified specialist workshop.
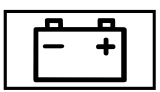 Stop vehicle Leave engine running	* The battery charge level is too low. ▶ Stop the vehicle immediately in accordance with the traffic conditions. Do not continue driving. ▶ Leave the engine running. ▶ Wait until the display message disappears before pulling away. ▶ **If the display message does not disappear:** consult a qualified specialist workshop.

Tyre pressure monitor

Display messages	Possible causes/consequences and ▶ Solutions
Tyre press. monitor currently unavailable	* There is interference from a powerful radio signal source. As a result, no signals from the tyre pressure sensors are being received. The tyre pressure monitor is temporarily unavailable. ▶ Drive on. The tyre pressure monitor will restart automatically as soon as the cause has been rectified.
Tyre press. monitor inoperative	* The tyre pressure monitor is malfunctioning. ⚠ **WARNING** There is a risk of an accident if the tyre pressure monitoring system is malfunctioning The tyre pressure monitoring system cannot issue a warning if there is pressure loss in one or more of the tyres. Tyres with insufficient tyre pressure may impair the driving characteristics as well as steering and braking. ▶ Have the tyre pressure monitoring system checked at a qualified specialist workshop.
Tyre press. monitor inoperative No wheel sensors	* The wheels fitted do not have suitable tyre pressure sensors. The tyre pressure monitor is deactivated. ▶ Fit wheels with suitable tyre pressure sensors.
 Wheel sensor(s) missing	* There is no signal from the tyre pressure sensor of one or more wheels. No pressure value is displayed for the affected tyre. ▶ Have the faulty tyre pressure sensor replaced at a qualified specialist workshop.

Display messages	Possible causes/consequences and ▶ Solutions
 Check tyre(s)	* The tyre pressure in one or more tyres has dropped significantly. The wheel position will be displayed. ⚠ **WARNING** Risk of an accident due to insufficient tyre pressure • The tyres can burst. • The tyres can wear excessively and/or unevenly. • The driving characteristics as well as the steering and braking may be greatly impaired. You could then lose control of the vehicle. ▶ Observe the recommended tyre pressures. ▶ Adjust the tyre pressure if necessary. ▶ Stop the vehicle in accordance with the traffic conditions. ▶ Check the tyre pressure (→ page 351) and the tyres.
 Rectify tyre pressure	* The tyre pressure is too low in at least one of the tyres, or the difference in tyre pressure between the individual wheels is too great. ▶ Check the tyre pressure and add air, if necessary. ▶ When the tyre pressure is correct, restart the tyre pressure monitoring system (→ page 354).

Display messages	Possible causes/consequences and ▶ Solutions
 Warning tyre defect	* The tyre pressure in one or more tyres has dropped suddenly. The wheel position will be displayed. **⚠ WARNING** Risk of an accident from driving with a flat tyre • The tyres can overheat and cause a fire. • The driving characteristics as well as the steering and braking may be greatly impaired. You could then lose control of the vehicle. ▶ Do not drive on with a flat tyre. ▶ Observe the notes on flat tyres. Notes on flat tyres (→ page 330). ▶ Stop the vehicle in accordance with the traffic conditions. ▶ Check the tyres.
Tyre(s) overheated	* At least one tyre is overheating. The affected tyres are displayed in red. At temperatures close to the limit value, the tyres are displayed in yellow. **⚠ WARNING** Risk of an accident from driving with overheated tyres Overheated tyres can burst. ▶ Reduce speed so that the tyres cool down.

Display messages	Possible causes/consequences and ▶ Solutions
Reduce speed	* At least one tyre is overheating. The affected tyres are displayed in red. At temperatures close to the limit value, the tyres are displayed in yellow. ⚠ **WARNING** Risk of an accident from driving with overheated tyres Overheated tyres can burst. ▶ Reduce speed so that the tyres cool down.

Tyre pressure loss warning system

Display messages	Possible causes/consequences and ▶ Solutions
Tyre pressure Check tyres	* The tyre pressure loss warning system has detected a significant loss of pressure. ⚠ **WARNING** Risk of an accident due to insufficient tyre pressure • The tyres can burst. • The tyres can wear excessively and/or unevenly. • The driving characteristics as well as the steering and braking may be greatly impaired. You could then lose control of the vehicle. ▶ Observe the recommended tyre pressures. ▶ Adjust the tyre pressure if necessary.

Display messages	Possible causes/consequences and ▶ Solutions
	▶ Stop the vehicle in accordance with the traffic conditions. ▶ Check the tyre pressure (→ page 351) and the tyres. ▶ When the tyre pressure is correct, restart the tyre pressure loss warning system (→ page 354).
Check tyre pressures then restart Run Flat Indicator	* The tyre pressure loss warning system generated a display message and has not been restarted since. ▶ When the tyre pressure is correct, restart the tyre pressure loss warning system (→ page 354).
Run Flat Indicator inoperative	* The tyre pressure loss warning system is malfunctioning. ▶ Consult a qualified specialist workshop.

Exhaust gas aftertreatment

Display messages	Possible causes/consequences and ▶ Solutions
 Refill AdBlue See Owner's Manual	* The AdBlue® level has fallen below the reserve range. ▶ Add at least 5 l of AdBlue® (→ page 193).

Display messages	Possible causes/consequences and ▶ Solutions
 Top up AdBlue Emergency op. in XXX miles See Owner's Manual	* The low AdBlue® level will lead to limited performance after the remaining distance displayed has been driven. ▶ Add at least 5 l of AdBlue® (→ page 193).
 XX,X l Top up AdBlue Emer. op.: max. XXX km/h Start not poss. in XXX km	* The low AdBlue® level will lead to limited performance starting from the speed displayed. After the remaining distance displayed has been covered, it will no longer be possible to start the engine. ▶ Add at least the amount of AdBlue® displayed (→ page 193).
 XX,X l Top up AdBlue Switch on ignition, wait 60 sec. or eng. start not poss.	* The AdBlue® tank is empty. You can no longer start the engine. ▶ Add at least the amount of AdBlue® displayed (→ page 193). ▶ Switch on the ignition and wait for approximately 60 seconds. ▶ Start the engine.

Display messages	Possible causes/consequences and ▶ Solutions
 AdBlue system fault See Owner's Manual	* The AdBlue® system is malfunctioning. ▶ Consult a qualified specialist workshop immediately.
 AdBlue system fault Emergency op. in XXX miles See Owner's Manual	* The AdBlue® system is malfunctioning. Performance will be reduced once the remaining distance displayed has been covered. ▶ Consult a qualified specialist workshop immediately.
 AdBlue system fault Emer. op.: max. XXX km/h Start not poss. in XXX km	* Power restriction due to the AdBlue® system fault. After the distance displayed has been covered, it will no longer be possible to start the engine. ▶ Consult a qualified specialist workshop immediately.

Display messages	Possible causes/consequences and ▶ Solutions
 AdBlue system fault Engine start not possible	* The AdBlue® system is malfunctioning. You can no longer start the engine. ▶ Consult a qualified specialist workshop immediately.

Engine oil

Display messages	Possible causes/consequences and ▶ Solutions
 Add 1 litre engine oil when next refuelling	* Display message only for certain engines: The engine oil level has dropped to the minimum level. **! NOTE** Engine damage caused by driving with insufficient engine oil ▶ Avoid long journeys with insufficient engine oil. ▶ When next refuelling, add 1 litre of engine oil (→ page 318). Notes on engine oil (→ page 377).

Display messages	Possible causes/consequences and ▶ Solutions
 Engine oil level Reduce oil level	* Display message only for certain engines: The engine oil level is too high. **!** **NOTE** Engine damage caused by driving with excess engine oil ▶ Avoid long journeys with excess engine oil. ▶ Consult a qualified specialist workshop immediately and have the engine oil level reduced.
 Engine oil level Stop vehicle Switch engine off	* Display message only for certain engines: The engine oil level is too low. **!** **NOTE** Engine damage caused by driving with insufficient engine oil ▶ Avoid long journeys with insufficient engine oil. ▶ Stop the vehicle immediately in accordance with the traffic conditions. Do not continue driving. ▶ Switch off the engine. ▶ Add 1 l of engine oil (→ page 318). ▶ Check the engine oil level. Notes on engine oil (→ page 377).

Display messages	Possible causes/consequences and ▶ Solutions
 Engine oil pressure Stop Switch off engine	* Display message only for certain engines: The oil pressure is too low. **! NOTE** Engine damage caused by driving with insufficient oil pressure ▶ Avoid driving with insufficient oil pressure. ▶ Stop the vehicle immediately in accordance with the traffic conditions. Do not continue driving. ▶ Consult a qualified specialist workshop.
 Engine oil level cannot be measured	* The electrical connection to the oil level sensor has been interrupted or the oil level sensor is faulty. ▶ Consult a qualified specialist workshop.

Warning and indicator lamps

Overview of indicator and warning lamps

Some systems will perform a self-test when the ignition is switched on. Some indicator and warning lamps may briefly light up or flash. This behaviour is non-critical. These indicator and warning lamps indicate a malfunction only if they light up or flash after the engine has been started or during a journey.

Instrument display (standard)



Widescreen cockpit instrument display

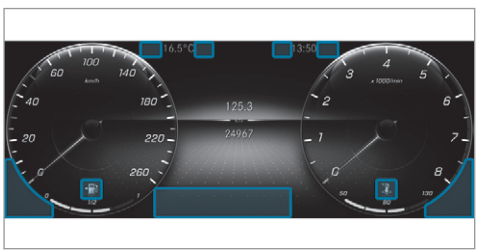

Depending on the display setting, the positions of the indicator lamps on the instrument display may differ from the example shown.

Indicator and warning lamps:

- Restraint system (→ page 442)
- Seat belt (→ page 442)
- Trailer hitch (→ page 443)
- Electric power steering (→ page 443)
- **Vehicles with a widescreen cockpit:** coolant temperature (→ page 444)
- Engine diagnostics (→ page 444)
- Preglow
- Electrical fault (→ page 444)
- Reserve fuel with fuel filler flap location indicator (→ page 444)
- Electric parking brake (red) (→ page 447)
- Electric parking brake (yellow) (→ page 447)
- Brakes (yellow) (→ page 447)
- Brakes (red) (→ page 447)
- Distance warning (→ page 449)
- ABS (→ page 450)
- ESP®(→ page 450)
- ESP® OFF (→ page 450)
- Tyre pressure monitor (→ page 452)
- Standing lights (→ page 138)
- Low beam (→ page 138)
- High beam (→ page 140)
- Turn signal lights (→ page 140)
- Front fog lamps (→ page 138)
- Rear fog light (→ page 138)

Occupant safety

Warning/indicator lamp	Possible causes/consequences and ▶ Solutions
 Restraint system warning lamp	The red restraint system warning lamp is lit while the engine is running. *The restraint system is malfunctioning (→ page 37). **⚠ WARNING** Risk of injury due to malfunctions in the restraint system Components in the restraint system may be activated unintentionally or not deploy as intended in an accident. ▶ Have the restraint system checked and repaired immediately at a qualified specialist workshop. ▶ Drive on carefully. ▶ Note the messages on the multifunction display. ▶ Consult a qualified specialist workshop immediately.
 Seat belt warning lamp flashes	The red seat belt warning lamp flashes and an intermittent warning tone sounds. * The driver or front passenger has not fastened their seat belt while the vehicle is in motion. ▶ Fasten your seat belt(→ page 40). * There are objects on the front passenger seat. ▶ Remove the objects from the front passenger seat.

Warning/indicator lamp	Possible causes/consequences and ▶ Solutions
 Seat belt warning lamp lights up	The red seat belt warning lamp will light up once the engine has started. In addition, a warning tone may sound. *The seat belt warning lamp reminds the driver and front passenger to fasten their seat belts. ▶ Fasten your seat belt (→ page 40). If you have placed objects on the front passenger seat, the seat belt warning lamp may remain lit.

Vehicle

Warning/indicator lamp	Possible causes/consequences and ▶ Solutions
 Trailer tow hitch warning lamp	The red trailer hitch warning lamp is lit. *The trailer hitch is not operational or is swivelling. ⚠ **WARNING** Risk of an accident if the ball neck is not locked The trailer may become detached. ▶ Stop the vehicle immediately in accordance with the traffic conditions. Do not continue driving. ▶ Uncouple the trailer and secure it against rolling away. ▶ Initiate a new swivel movement and do not re-couple the trailer until the warning/indicator lamp goes out. ▶ Note the messages on the multifunction display.

Warning/indicator lamp	Possible causes/consequences and ▶ Solutions
	If the trailer hitch is swivelling: ▶ Wait until the ball neck has reached the operational position.
 Electric power steering warning lamp (red)	The red electric power steering warning lamp is lit while the engine is running. *The power assistance or the steering itself is malfunctioning. **⚠ WARNING** Risk of accident if steering capability is impaired If the steering does not function as intended, the vehicle's operating safety is jeopardised. ▶ Pull over and stop the vehicle safely as soon as possible, paying attention to road and traffic conditions. Do not continue driving under any circumstances. ▶ Consult a qualified specialist workshop. ▶ Note the messages on the multifunction display.

Engine

Warning/indicator lamp	Possible causes/consequences and ▶ Solutions
 Coolant warning lamp	The red coolant warning lamp is lit while the engine is running. *Possible causes: • The temperature sensor is malfunctioning

Warning/indicator lamp	Possible causes/consequences and ▶ Solutions

- The coolant level is too low
- The air supply to the radiator is obstructed
- The radiator fan is faulty

If there is an additional warning tone, the coolant temperature has exceeded 120 °C.

⚠ WARNING Danger of burns when opening the bonnet

If you open the engine bonnet when the engine has overheated or during a fire in the engine compartment, you could come into contact with hot gases or other escaping operating fluids.

▶ Before opening the bonnet, allow the engine to cool down.

▶ In the event of a fire in the engine compartment, keep the engine bonnet closed and call the fire service.

▶ Stop the vehicle immediately in accordance with the traffic conditions and switch off the engine. Do not continue driving.

▶ Note the messages on the multifunction display.

If the coolant temperature display is at the lower end of the temperature scale:

▶ Consult a qualified specialist workshop.

or

▶ Exit the vehicle and keep a safe distance from it until the engine has cooled down.

▶ Check the coolant level (→ page 319).

Warning/indicator lamp	Possible causes/consequences and ▶ Solutions
	▶ Make sure that the air supply to the radiator is not obstructed. ▶ Avoiding high loads on the engine, drive to the nearest qualified specialist workshop. In doing so, ensure that the coolant temperature display remains below 120 °C.
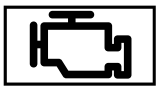 Engine diagnosis warning lamp	The yellow engine diagnostics warning lamp is lit while the engine is running. *A malfunction has occurred in the engine, the exhaust system or the fuel system. The emissions limit value may have been exceeded and the engine may be running in emergency operation mode. ▶ Have the vehicle checked as soon as possible at a qualified specialist workshop. ***Vehicles with a diesel engine:** the fuel tank may have been run dry. ▶ Start the engine three to four times after refuelling. If the yellow engine diagnosis warning lamp goes out, emergency operation mode is cancelled. The vehicle need not be checked.
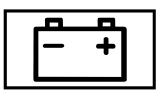 Electrical fault warning lamp	The red electrical fault warning lamp is lit. * There is a fault in the electrics. ▶ Note the messages on the multifunction display.

Warning/indicator lamp	Possible causes/consequences and ▶ Solutions
 Fuel reserve warning lamp lights up	The yellow fuel reserve warning lamp lights up while the engine is running. * The fuel supply has dropped into the reserve range. ▶ Refuel.

Brakes

Warning/indicator lamp	Possible causes/consequences and ▶ Solutions
 Electric parking brake indicator lamp (red)  The electric parking brake (yellow) indicator lamp	The red electric parking brake indicator lamp flashes or is lit. The yellow electric parking brake indicator lamp also lights up in the event of a malfunction. * ▶ Note the messages on the multifunction display.

Warning/indicator lamp	Possible causes/consequences and ▶ Solutions
 Brake system warning lamp (yellow)	The yellow brake system warning lamp is lit while the engine is running. * ⚠ **WARNING** Risk of an accident due to a brake system malfunction If the brake system is malfunctioning, braking characteristics may be impaired. ▶ Drive on carefully. ▶ Have the brake system checked immediately at a qualified specialist workshop. ▶ Adjust your speed and drive on carefully, leaving a suitable distance to the vehicle in front. ▶ If the multifunction display shows a display message, observe it. ▶ Consult a qualified specialist workshop.
 Brake system warning lamp (red)	The red brake system warning lamp is lit while the engine is running. *Possible causes: • The brake force boosting is malfunctioning and the braking characteristics may be affected. • There is insufficient brake fluid in the brake fluid reservoir. ▶ Note the messages on the multifunction display. ⚠ **WARNING** Risk of accident and injury if brake force boosting is malfunctioning If brake force boosting is malfunctioning, increased brake pedal force may be necessary for braking. The braking characteristics may be impaired. The braking distance can increase in emergency braking situations.

Warning/indicator lamp	Possible causes/consequences and ▶ Solutions
	▶ Stop in a safe location immediately. Do not continue driving! ▶ Consult a qualified specialist workshop. ⚠ **WARNING** Risk of an accident due to low brake fluid level If the brake fluid level is too low, the braking effect and the braking characteristics may be impaired. ▶ Stop the vehicle as soon as possible, paying attention to road and traffic conditions. Do not continue driving. ▶ Consult a qualified specialist workshop. ▶ Do not top up the brake fluid.

Driving systems

Warning/indicator lamp	Possible causes/consequences and ▶ Solutions
 Warning lamp for distance warning function	The red distance warning lamp lights up while the vehicle is in motion. * The distance to the vehicle in front is too small for the speed selected. If there is an additional warning tone, you are approaching an obstacle at too high a speed. ▶ Be prepared to brake immediately. ▶ Increase the distance.

Warning/indicator lamp	Possible causes/consequences and ▶ Solutions
	Function of Active Brake Assist (→ page 208).

Driving safety systems

Warning/indicator lamp	Possible causes/consequences and ▶ Solutions
 ABS warning lamp	The yellow ABS warning lamp is lit while the engine is running. *ABS is malfunctioning. If there is an additional warning tone, EBD is malfunctioning. Other driving systems and driving safety systems may also be malfunctioning. ▶ Note the messages on the multifunction display. **⚠ WARNING** There is a risk of skidding if EBD or ABS is malfunctioning The wheels may lock during braking. The steerability and braking characteristics are heavily impaired and the braking distance may increase. In addition, other driving safety systems are switched off. ▶ Drive on carefully. ▶ Have the brake system checked immediately at a qualified specialist workshop.

Warning/indicator lamp	Possible causes/consequences and ▶ Solutions
 ESP® warning lamp flashes	The yellow ESP® warning lamp flashes while the vehicle is in motion. * One or more wheels has reached its grip limit (→ page 205). ▶ Adapt your driving style to suit the road and weather conditions.
 ESP® warning lamp lights up	The yellow ESP® warning lamp is lit while the engine is running. *ESP® is malfunctioning. Other driving systems and driving safety systems (e.g. BAS) may also be malfunctioning. ▶ Note the messages on the multifunction display. ⚠ **WARNING** Risk of skidding if ESP® is malfunctioning If ESP® is malfunctioning, ESP® cannot carry out vehicle stabilisation. In addition, other driving safety systems are switched off. ▶ Drive on carefully. ▶ Have ESP® checked at a qualified specialist workshop.
 ESP® OFF warning lamp	The yellow ESP® OFF warning lamp is lit while the engine is running. *ESP® is deactivated. Other driving systems and driving safety systems may also be inoperative.

Warning/indicator lamp	Possible causes/consequences and ▶ Solutions
	⚠ **WARNING** Risk of skidding when driving with ESP® deactivated ESP® does not act to stabilise the vehicle. The availability of further driving safety systems is also limited. ▶ Drive on carefully. ▶ Deactivate ESP® only for as long as the situation requires. If ESP® cannot be activated, ESP® is malfunctioning. ▶ Have ESP® checked immediately at a qualified specialist workshop. ▶ Observe the notes on deactivating ESP® (→ page 205).

Tyre pressure monitor

Warning/indicator lamp	Possible causes/consequences and ▶ Solutions
 Tyre pressure monitoring system warning lamp flashes	The yellow tyre pressure monitor warning lamp (pressure loss/malfunction) flashes for approximately one minute and then remains lit. *The tyre pressure monitor is malfunctioning. ⚠ **WARNING** There is a risk of an accident if the tyre pressure monitoring system is malfunctioning The tyre pressure monitoring system cannot issue a warning if there is pressure loss in one or more of the tyres.

Warning/indicator lamp	Possible causes/consequences and ▶ Solutions
	Tyres with insufficient tyre pressure may impair the driving characteristics as well as steering and braking. ▶ Have the tyre pressure monitoring system checked at a qualified specialist workshop.
 Tyre pressure monitoring system warning lamp lights up	The yellow tyre pressure monitoring system warning lamp (pressure loss/malfunction) is lit. *The tyre pressure monitoring system has detected tyre pressure loss in at least one of the tyres. ⚠ **WARNING** Risk of an accident due to insufficient tyre pressure • The tyres can burst. • The tyres can wear excessively and/or unevenly. • The driving characteristics as well as the steering and braking may be greatly impaired. You could then lose control of the vehicle. ▶ Observe the recommended tyre pressures. ▶ Adjust the tyre pressure if necessary. ▶ Stop the vehicle in accordance with the traffic conditions. ▶ Check the tyre pressure and the tyres.

1, 2, 3 ...

4MATIC 188
Function 188

12 V battery
see Battery (vehicle)

12 V socket
see Socket (12 V)

115 V socket
see Socket (115 V)

230 V socket
see Socket (230 V)

360° Camera 238
Care 325
Function 238
Opening the camera cover (reversing camera) 241
Selecting a view 240
Switching automatic operation on/off (reversing camera) 241

A

A/C function
Activating/deactivating (MBUX multimedia system) 159
Switching on/off (control panel) 158

ABS (Anti-lock Braking System) 204

Acceleration
see Kickdown

Accident and breakdown management
Mercedes me connect 293

Acoustic locking verification signal
Activating/deactivating 75

Active Blind Spot Assist 252
Activating/deactivating 254
Brake application 253
Function 252
System limitations 252
Trailer operation 253

Active bonnet (pedestrian protection) ... 315
Operation 315
Resetting 315

Active Brake Assist
Function/notes 208
Setting 212

Active Distance Assist DISTRONIC 217
Active Emergency Stop Assist 227
Active Lane Change Assist 226
Calling up a speed 219
Function 217
Increasing/decreasing speed 219
Requirements: 219
Route-based speed adaptation 222
Selecting 219
Steering wheel buttons 219
Storing a speed 219
Switching off/deactivating 219
Switching on/activating 219
System limitations 217

Active Emergency Stop Assist 227

Active headlamps 141

Active Lane Change Assist 226
Activating/deactivating 227
Function 226

Active Lane Keeping Assist 255
Activating/deactivating 257

Activating/deactivating the warning ... 257
Function ... 255
Setting the sensitivity ... 257
System limits ... 255
Trailer operation ... 255

Active Parking Assist ... 241
Cross Traffic Alert ... 246
Drive Away Assist ... 245
Exiting a parking space ... 244
Function ... 241
Manoeuvring assistance ... 246
Parking ... 243
System limitations ... 241

Active Service System PLUS
see ASSYST PLUS

Active Speed Limit Assist ... 221
Display ... 221
Function ... 221

Active Steering Assist ... 224
Activating/deactivating ... 225
Active Emergency Stop Assist ... 227
Active Lane Change Assist ... 226
Function ... 224
System limits ... 224

Adaptive brake lights ... 212

Adaptive cruise control
see Active Distance Assist DISTRONIC

Adaptive Highbeam Assist
Function ... 143
Switching on/off ... 144

Adaptive Highbeam Assist Plus
Function ... 144
Switching on/off ... 145

AdBlue® ... 376
Additives ... 376
Capacity ... 377
Notes ... 192
Purity ... 376
Topping up ... 193

Additional door lock ... 77

Additives ... 377
AdBlue® ... 376
Engine oil ... 377
Fuel ... 374

Additives (AdBlue®)
see AdBlue®

Additives (engine oil)
see Additives

Additives (fuel)
see Fuel

Adjustable load compartment floor ... 129

Adjusting the headlamp range ... 139

After-sales service centre
see ASSYST PLUS

Air conditioning menu
Calling up ... 159

Air conditioning system
see Climate control

Air distribution
Setting ... 157
Setting (MBUX multimedia system) ... 159

Air inlet
see Air-water duct

Air pressure
see Tyre pressure

Air vents ... 165
Adjusting (front) ... 165
Adjusting (rear) ... 166

Air vents
see Air vents
Air-recirculation mode 160
Air-water duct 321
Keeping free 321
Airbag 42
Activation 37
Front airbag (driver, front passenger) 42
Installation locations 42
Knee airbag 42
Overview 42
PASSENGER AIR BAG indicator lamp 46
Protection 43
Reduced protection 44
Side airbag 42
Window airbag 42
Airflow
Setting 157
Alarm system
see ATA (anti-theft alarm system)
All-wheel drive
see 4MATIC
Ambient lighting
Setting (multimedia system) 146
Android Auto
see Smartphone integration®
Animals
Pets in the vehicle 72
Anti-lock braking system
see ABS (Anti-lock Braking System)
Anti-skid chains
see Snow chains
Anti-theft protection
Additional door lock 77
Immobiliser 95
Anticipatory occupant protection
see PRE-SAFE® (anticipatory occupant protection)
see PRE-SAFE® PLUS (anticipatory occupant protection plus)
Apple CarPlay
see Smartphone integration®
Assistance systems
see Driving safety system
ASSYST PLUS 314
Battery disconnection periods 315
Displaying the service due date 314
Function/notes 314
Regular maintenance work 314
Special service requirements 314
ATA (anti-theft alarm system) 96
Deactivating the alarm 96
Function 96
Function of interior protection 97
Priming/deactivating interior protection 98
Priming/deactivating tow-away protection 97
Tow-away protection function 96
ATTENTION ASSIST 247, 248
Function 247
Setting 248
System limitations 247
Attention assistant
see ATTENTION ASSIST
Authorised workshop
see Qualified specialist workshop

Automatic car wash mode
Activating ... 323
Automatic distance control
see Active Distance Assist DISTRONIC
Automatic driving lights ... 139
Automatic engine start (ECO start/stop function) ... 177
Automatic engine stop (ECO start/stop function) ... 177
Automatic front passenger front airbag deactivation system
see Automatic front passenger front airbag shutoff
Automatic front passenger front airbag shutoff ... 45, 46
Function of the automatic front passenger front airbag deactivation system ... 45
PASSENGER AIR BAG indicator lamp ... 46
Automatic measures after an accident ... 50
Automatic mirror folding function
Activating/deactivating ... 156
Automatic transmission
DIRECT SELECT lever ... 184
Drive program display ... 180
Drive programs ... 179
DYNAMIC SELECT switch ... 179
Engaging drive position ... 186
Engaging neutral ... 185
Engaging park position ... 185
Engaging reverse gear ... 185
Kickdown ... 187
Manual gear changing ... 186
Steering wheel gearshift paddles ... 186
Transmission position display ... 184
Transmission positions ... 184
Automatic transmission (problem)
see Transmission (problem)
Axle load
Permissible ... 370
Trailer operation ... 384

B

Bag hook ... 128
Baidu CarLife
see Smartphone integration®
Ball coupling
Folding in/out (MBUX multimedia system) ... 260
Ball neck
Folding out/in ... 258
BAS (Brake Assist System) ... 205
Battery
Key ... 76
Remote control (stationary heater) ... 163
Battery
see Battery (vehicle)
Battery (vehicle) ... 341
Charging ... 340
Charging (Remote Online) ... 170
Notes ... 337
Notes (starting assistance and charging) ... 338
Replacing ... 341
Starting assistance ... 340
Belt
see Seat belt
Bicycle rack
Load capacity ... 384

Trailer operation 262
Blind Spot Assist 252
Activating/deactivating 254
Function 252
System limitations 252
Blower
see Climate control
BlueTEC
see AdBlue®
Bonnet
Resetting (active bonnet) 315
Boot lid
see Tailgate
Brake Assist System
see BAS (Brake Assist System)
Brake fluid
Notes 379
Brake force distribution
EBD (Electronic Brake force Distribution) 207
Brakes
ABS (Anti-lock Braking System) 204
Active Brake Assist 208
Adaptive brake lights 212
BAS (Brake Assist System) 205
Driving tips 172
EBD (Electronic Brake force Distribution) 207
HOLD function 228
Limited braking effect (salt-treated roads) 172
New/replaced brakepads/brake discs 171
Post-collision brake 50
Running-in notes 171
Braking assistance
see BAS (Brake Assist System)
Breakdown
Overview of the help functions 18
Tow-starting 346
Towing away 342
Transporting the vehicle 344
Wheel change 360
Breakdown
see Flat tyre
Buttons
Steering wheel 266

C

Calls
Mercedes me 294
Camera
see 360° Camera
see Reversing camera
Car key
see Key
Car wash
see Care
Car wash (care) 321
Car-to-X-Communication
Displaying hazard warnings 288
Care 326
360° camera 325
Air-water duct 321
Car wash 321
Carpet 326
Decorative foil 324
Display 326
Exterior lighting 325
High-pressure cleaner 323
Matt finish 324

Paintwork ... 324
Plastic trim ... 326
Real wood/trim elements ... 326
Reversing camera ... 325
Roof lining ... 326
Seat belt ... 326
Seat cover ... 326
Sensors ... 325
Tailpipes ... 325
Trailer hitch ... 325
Washing by hand ... 324
Wheels/rims ... 325
Windows ... 325
Wiper blades ... 325

Carpet (Care) ... 326

Changing bulbs ... 147
Dipped beam ... 149
Fitting/removing cover (front wheel arch) ... 148
Main beam ... 149
Notes ... 147
Overview ... 148
Reversing lights ... 149
Turn signal lights (rear) ... 149

Changing gears ... 186
Manually ... 186

Changing hub caps ... 360

Changing the lights
Driving abroad (symmetrical low beam) ... 138

Charging
Battery (vehicle) ... 340
USB port ... 133

Child safety lock
Rear door ... 70
Rear side windows ... 72

Child seat
Approval categories ... 56
Attaching (notes) ... 56
Basic instructions ... 51
Front passenger seat (notes) ... 69
Front passenger seat (without automatic airbag shutoff) ... 68
ISOFIX/i-Size (fitting) ... 60
Notes on risks and dangers ... 52
Recommended child restraint systems ... 55
Seats suitable for belt-secured child restraint systems ... 65
Seats suitable for i-Size child restraint systems ... 60
Seats suitable for ISOFIX child restraint systems ... 58
Securing on the co-driver seat ... 69
Securing on the rear seat ... 67
Top Tether ... 63

Children
Avoiding dangers in the vehicle ... 52
Basic instructions ... 51

Chock ... 359
Storage location ... 359

Chock
see Chock

City lighting ... 142

Cleaning
see Care

Climate control ... 157
Activating/deactivating the A/C function (control panel) ... 158
Activating/deactivating the A/C function (MBUX multimedia system) ... 159

Activating/deactivating the synchronisation function (control panel) 159
Activating/deactivating the synchronisation function (MBUX multimedia system) 159
Air-recirculation mode 160
Automatic control 159
Calling up the air conditioning menu ... 159
Defrosting the windscreen 157
Demisting windows 160
Front air vents 165
Note 157
Rear air vents 166
Residual heat 160
Sets the airflow 157
Setting (MBUX multimedia system) 159
Setting the air distribution 157
Setting the temperature 157
Stationary heater/ventilation 160
Switching on/off 158
Switching the rear window heater on/off 157
THERMATIC control panel 157
THERMOTRONIC control panel 157
Ventilating the vehicle (convenience opening) 90

Coat hook 129
Coat hook on the tailgate 129
Cockpit 6
Overview 6
Coffee cup symbol
see ATTENTION ASSIST
Collision detection (parked vehicle) 201
Combination switch 140
Computer
see On-board computer
Consumption indicator
Calling up 182
Convenience closing 90
Convenience opening 90
Coolant (engine)
Check level 319
Notes 379
Cooling
see Climate control
Copyright 35
Cornering light 142

Cross Traffic Alert 246
Crosswind Assist
Function/notes 207
Cruise control 213
Activating 214
Buttons 214
Calling up a speed 214
Deactivating 214
Function 213
Requirements 214
Selecting 214
Setting a speed 214
Storing a speed 214
System limitations 213

D

Damping adjustment 230
Dashboard
see Cockpit
Data acquisition
Vehicle 33
Data storage
Electronic control units 33
Online services 34

Vehicle 33
Deactivating the alarm (ATA) 96
Dealership
see Qualified specialist workshop
Declaration of conformity
Electromagnetic compatibility 25
Jack 29
TIREFIT kit 30
Wireless vehicle components 25
Decorative foil (cleaning instructions) .. 324
DeNOx agent
see AdBlue®
Destination entry 285
Entering a POI or address 285
Detecting inattentiveness
see ATTENTION ASSIST
Diagnostics connection 30
Diesel
Low outside temperatures 375
Notes 375
Digital Owner's Manual 20
Digital Vehicle Key sticker
Locking the vehicle 79
Starting the vehicle 169
Unlocking the vehicle 79
Dinghy towing
see Tow-bar system
Dipped beam
Changing bulbs 149
DIRECT SELECT lever 184
Engaging drive position 186
Engaging neutral 185
Engaging park position 185
Engaging park position automatically .. 185
Engaging reverse gear 185
Function 184
Display (Care) 326
Display (MBUX multimedia system)
Home screen 272
Display (multimedia system) 273
Operating 273
Display (on-board computer)
Displays on the multifunction display .. 268
Display message 386
Calling up (on-board computer) 386
Notes 386
Display messages
--- km/h 423
--- km/h 421
LIM --- km/h 423
2nd seat row, left Not locked 401
2nd seat row, right Not locked ... 401
12 V battery See Owner's Manual 429
Active Light System inoperative 393
AdBlue system fault Emer. op.: max. XXX km/h Start not poss. in XXX km 437
AdBlue system fault Emergency op. in XXX miles See Owner's Manual 437
AdBlue system fault Engine start not possible 438

AdBlue system fault See Owner's Manual 437
Add 1 litre engine oil when next refuelling 438
ATTENTION ASSIST inoperative .. 414
ATTENTION ASSIST: Take a break! 414
Automatic driving lights inoperative 392
Before starting the engine, turn the steering wheel. 399
Brake immediately 413
Change key batteries 390
Check brake fluid level 413
Check brake pads See Owner's Manual 413
Check trailer hitch lock (white display message) 396
Check tyre(s) 432
Clean the fuel filter 403
Coolant Stop vehicle Switch engine off 402
Currently unavailable Camera view restricted 420
Currently unavailable Radar sensors dirty 419
currently unavailable See Owner's Manual 424
currently unavailable See Owner's Manual 426
Engine oil level cannot be measured 440
Engine oil level Reduce oil level 439
Engine oil level Stop vehicle Switch engine off 439
Engine oil pressure Stop Switch off engine 440
Fault Drive at max. 80 km/h 414
Front left malfunction Consult workshop (example) 387
inoperative Battery low 395
inoperative Refuel vehicle 395
inoperative See Owner's Man. ... 395
inoperative See Owner's Manual 425
inoperative See Owner's Manual 426
EBD inoperative See Owner's Manual 427
SOS Inoperative 429
DSR inoperative 421
Intelligent Light System inoperative 393
Key not detected (red display message) 391
Key not detected (white display message) 391
Left dipped beam (example) 392

Left windowbag malfunction Consult workshop (example) 387
Malfunction See Owner's Manual 392
Max. speed 40 km/h 421
Maximum speed exceeded 424
Not in curr. drive prog. 421
Off 422
Off 420
Operation only possible in transmission position N 396
Parking brake See Owner's Manual 409
Rectify tyre pressure 432
Refill AdBlue See Owner's Manual 435
Release parking brake 412
Replace air cleaner 404
Replace key See Owner's Manual 390
Replace key 390
Reserve fuel level 403
Restraint sys. malfunction Consult workshop 387
See Owner's Manual 429
Steering malfunction Increased physical effort See Owner's Manual 398
Steering malfunction See Owner's Manual 398
Steering malfunction Stop immediately See Owner's Manual 398
Stop vehicle Leave engine running 430
Stop vehicle See Owner's Manual 430
suspended 422
Switch off lights 393
Switch on headlamps 393
Top up AdBlue Emergency op. in XXX miles See Owner's Manual 436
Top up coolant See Owner's Manual 402
Top up washer fluid 401
Trans. oil overheated Drive on with care 407
Turn on the ignition to release the parking brake 412
..... 436
Vehicle is operational Switch off ignition before exiting 396
Warning tyre defect 433
Wheel sensor(s) missing 431
XX,X l Top up AdBlue Switch on ignition, wait 60 sec. or eng. start not poss. 436
Active Blind Spot Assist currently unavailable See Owner's Manual 417
Active Blind Spot Assist inoperative 417

Active Blind Spot Assist not available when towing a trailer See Owner's Manual ... 417
Active bonnet malfunction See Owner's Manual ... 399
Active Brake Assist Functions currently limited See Owner's Manual ... 427
Active Brake Assist Functions limited See Owner's Manual ... 428
Active Distance Assist available again ... 422
Active Distance Assist currently unavailable See Owner's Manual ... 422
Active Distance Assist inoperative ... 422
Active Lane Keeping Assist currently unavailable See Owner's Manual ... 416
Active Lane Keeping Assist inoperative ... 416
Active Parking Assist and PARKTRONIC inoperative See Owner's Manual ... 417
Active Steering Assist currently unavailable due to multiple emergency stops ... 416
Active Steering Assist currently unavailable See Owner's Manual ... 414
Active Steering Assist inoperative ... 415
Adaptive Highbeam Assist currently unavailable See Owner's Manual ... 394
Adaptive Highbeam Assist inoperative ... 394
Adaptive Highbeam Assist Plus currently unavailable See Owner's Manual ... 394
Adaptive Highbeam Assist Plus inoperative ... 394
Anti-theft alarm system Malfunction ... 400
Apply brake to deselect Park (P) position ... 404
Apply brake to select D or R ... 405
Apply brake to select R ... 405
Auxiliary battery malfunction ... 406
Beginning emergency stop ... 415
Blind Spot Assist currently unavailable See Owner's Manual ... 416
Blind Spot Assist inoperative ... 416
Blind Spot Assist not available when towing a trailer See Owner's Manual ... 417
Check tyre pressures then restart Run Flat Indicator ... 435
Clutch overheated Avoid pulling away until the warning goes out ... 408
Cruise control and Limiter inoperative ... 423
Cruise control inoperative ... 423
Cruise control off ... 423
Depress clutch fully to start engine ... 408

Drive system Malfunction Stop Switch engine off ... 404
Drive system Malfunction Visit workshop ... 404
Front-passenger airbag disabled See Owner's Manual ... 388
Front-passenger airbag enabled See Owner's Manual ... 388
Hazard warning lamps malfunctioning ... 394
Limiter inoperative ... 423
Limiter passive ... 423
Mercedes me connect Services limited See Owner's Manual ... 428
N permanently active Risk of vehicle rolling ... 405
Only select Park (P) when vehicle is stationary ... 404
Parking lock inoperative Apply the parking brake ... 407
Place the key in the marked space See Owner's Manual ... 391
PRE-SAFE inoperative See Owner's Manual ... 389
Reduce speed ... 434
Reversing not poss. Consult workshop ... 406
Risk of vehicle rolling away Apply parking brake See Owner's Manual ... 408
Risk of vehicle rolling away Parking brake not applied See Owner's Manual ... 412
Risk of vehicle rolling Driver door open and transmission not in P ... 405
Run Flat Indicator inoperative ... 435
Speed limit (winter tyres) XXX km/h ... 424
Speed Limit Assist currently unavailable See Owner's Manual ... 418
Speed Limit Assist inoperative ... 418
Teaching in transmission complete ... 408
Teaching in transmission Operate selector lever Brake for XX seconds Risk of vehicle rolling ... 407
To shift out of P or N, depress brake and start engine ... 405
To switch off the engine, press the Start/Stop button for at least 3 seconds or 3 times. ... 402
Traffic Sign Assist currently unavailable See Owner's Manual ... 418
Traffic Sign Assist inoperative ... 418
Transmission Malfunction ... 407
Transmission Malfunction Stop ... 406
Transmission Malfunction Visit workshop ... 408
Tyre press. monitor currently unavailable ... 431
Tyre press. monitor inoperative ... 431
Tyre press. monitor inoperative No wheel sensors ... 431

Tyre pressure Check tyres 434
Tyre(s) overheated 433
Without changing gear, consult workshop 406

Display on the windscreen
see Head-up display

Distance control
see Active Distance Assist DISTRONIC

DISTRONIC
see Active Distance Assist DISTRONIC

Door
Additional door lock 77
Child safety lock (rear door) 70
Locking (emergency key) 81
Opening (from the inside) 78
Unlocking (emergency key) 81
Unlocking (from the inside) 78

Door control panel 16

Downhill driving assistance
see DSR

Drawbar
see Tow-bar system

Drive Away Assist 245

Drive Away Assist
see Protection against collision

Drive position
Engaging 186

Drive program display 180

Drive programs
see DYNAMIC SELECT

Driver's seat
see Seat

Driving abroad
Symmetrical low beam 138

Driving safety system 202
ABS (Anti-lock Braking System) 204
Active Brake Assist 208
Adaptive brake lights 212
BAS (Brake Assist System) 205
Cameras 203
EBD (Electronic Brake force Distribution) 207
ESP® Crosswind Assist 207
ESP® trailer stabilisation 207
Off-road ABS 204
Overview 203
Radar and ultrasonic sensors 203
Responsibility 202
STEER CONTROL 207

Driving system
Suspension with adaptive damping adjustment 230

Driving system
see 360° Camera
see Active Blind Spot Assist
see Active Distance Assist DISTRONIC
see Active Emergency Stop Assist
see Active Lane Change Assist
see Active Lane Keeping Assist
see Active Parking Assist
see Active Speed Limit Assist
see Active Steering Assist
see ATTENTION ASSIST
see Blind Spot Assist
see Cruise control
see Driving safety system
see DSR
see HOLD function
see Limiter
see Parking Assist PARKTRONIC

see Reversing camera
see Speed Limit Assist
see Start-off assist
see Traffic Sign Assist

Driving tips
Driving abroad (symmetrical low beam) ... 138
General driving tips ... 172
Running-in notes ... 171

Drowsiness detection
see ATTENTION ASSIST

DSR ... 216
Activating/deactivating ... 216
Changing the target speed ... 217
Function ... 216
Notes ... 216

Dynamic handling control system
see ESP® (Electronic Stability Program)

DYNAMIC SELECT ... 179
Configuring drive program I ... 181
Displaying engine data ... 182
Displaying vehicle data ... 181
Drive program display ... 180
Drive programs ... 179
Function ... 179
Operating (DYNAMIC SELECT switch) ... 180
Selecting the drive program ... 180

DYNAMIC SELECT switch
Damping adjustment ... 230

E

E10 ... 373

Easy entry feature
Function/notes ... 112
Setting ... 113

Easy exit feature
Function/notes ... 112
Setting ... 113

EBD (Electronic Brake force Distribution)
Function/notes ... 207

ECO display
Function ... 179

ECO start/stop function ... 177
Automatic engine start ... 177
Automatic engine stop ... 177
Operation ... 177
Switching off/on ... 178

Electric parking brake ... 198
Applying automatically ... 198
Applying or releasing manually ... 200
Emergency braking ... 201
Releasing automatically ... 200

Electrical fuses
see Fuses

Electromagnetic compatibility
Declaration of conformity ... 25

Electronic Stability Program
see ESP® (Electronic Stability Program)

Emergency
Fire extinguisher ... 329
First-aid kit (soft sided) ... 329
Overview of the help functions ... 18
Removing the warning triangle ... 328
Safety vest ... 328
Setting up the warning triangle ... 329

Emergency braking ... 201

Emergency braking
see BAS (Brake Assist System)

Emergency call system
see Mercedes-Benz emergency call system
Emergency engine start 346
Emergency key
Inserting/removing 76
Locking a door 81
Unlocking a door 81
Unlocking the tailgate 87
Emergency operation mode
Starting the vehicle 169
Emergency spare wheel 365
Inflating 366
Notes 365
Engine
ECO start/stop function 177
Engine number 370
Starting (Digital Vehicle Key sticker) 169
Starting (emergency operation mode) 169
Starting (mobile phone) 169
Starting (Remote Online) 171
Starting (start/stop button) 168
Starting assistance 340
Switching off (start/stop button) 195
Engine bonnet
Function (active bonnet) 315
Opening/closing 316
Engine data
Displaying 182
Engine electronics
Notes 368
Engine number 370
Engine oil 318
Additives 377
Capacity 378
Checking the oil level using the on-board computer 318
MB-Freigabe or MB-Approval 378
Quality 378
Topping up 318
ERA-GLONASS test mode
Starting/ending 306
ESC (Electronic Stability Control)
see ESP® (Electronic Stability Program)
ESP®
Crosswind Assist 207
Trailer stabilisation 207
ESP® (Electronic Stability Program) 205
Activating/deactivating 206
Function/notes 205
EU general operating permit number 370
Exterior lighting
see Lights
Exterior lighting (Care) 325

F

Fatigue detection
see ATTENTION ASSIST
Fault message
see Display message
Fire extinguisher 329
First-aid kit (soft sided) 329
Flat towing
see Tow-bar system
Flat tyre 330
MOExtended tyres 331
Notes 330
TIREFIT kit 332
Wheel change 360

Floor mats 136
Foil covering
Radar and ultrasonic sensors 203
Free software 35
Frequencies
Mobile phone 369
Two-way radio 369
Front airbag (driver, front passenger) 42
Front passenger seat
see Load compartment
see Seat
Front wheel arch 148
Fitting/removing the cover 148
Front wheel arch cover
Fitting/removing 148
Fuel 374
Additives 374
Diesel 375
E10 373
Fuel reserve 376
Low outside temperatures 375
Petrol 373
Quality (diesel) 375
Quality (petrol) 373
Refuelling 189
Sulphur content 373
Tank content 376
Function seat
see Door control panel
Fuses 346
Before replacing a fuse 346
Fuse assignment diagram 346
Fuse box in the engine compartment .. 347
Fuse box in the front passenger footwell 348
Fuse box in the load compartment 349
Notes 346

G

Garage door opener
Clearing the memory 198
Opening or closing the door 198
Programming buttons 196
Resolving problems 197
Synchronising the rolling code 197
Gearshift recommendation 183, 187
General operating permit number (EU) 370
Genuine parts 23
Glide mode 188

H

Handbrake
see Electric parking brake
Handling characteristics (unusual) 350
HANDS-FREE ACCESS 86
Hazard warning lights 141
Head restraint
Front (adjusting mechanically) 107
Rear (adjusting) 108
Rear (fitting/removing) 108
Head-up display 269
Adjusting display elements (on-board computer) 269
Adjusting the brightness (on-board computer) 269
Function 268
Menu (on-board computer) 269
Operating the memory function 113

Setting the position (on-board computer) ... 269
Switching on/off ... 270
Headlamp flashing ... 140
Headlamps
see Automatic driving lights
Heating
see Climate control
High beam
Activating/deactivating ... 140
Adaptive Highbeam Assist ... 143
Adaptive Highbeam Assist Plus ... 144
High-pressure cleaner (care) ... 323
Hill Start Assist ... 228
HOLD function ... 228
Function/notes ... 228
Switching on/off ... 228
Home screen (media display)
Overview ... 272

I

i-Size child seat securing system
Fitting ... 60
i-Size child seat securing system
Seats suitable for attaching ... 60
Identification plate
Engine ... 370
Vehicle ... 370
Ignition
Switching on (Start/Stop button) ... 167
Ignition key
see Key
Immobiliser ... 95
Implied warranty
Vehicle ... 32
In-Car Office ... 298
Features ... 298
Indicator lamps
see Warning/indicator lamps
Individual drive program
Configuring ... 181
Selecting ... 180
Inspection
see ASSYST PLUS
Instrument cluster
Function/notes ... 264, 265
Instrument display
Function/notes ... 265
Instrument cluster ... 10
Warning/indicator lamps ... 440
Instrument display and on-board computer
Function/notes ... 264
Intelligent Light System
Active headlamps ... 141
Adaptive Highbeam Assist ... 143
Adaptive Highbeam Assist Plus ... 144
City lighting ... 142
Cornering light ... 142
Motorway mode ... 142
Overview ... 141
Switching on/off ... 143
Interior lighting ... 146
Ambient lighting ... 146
Reading light ... 146
Setting ... 146
Switch-off delay time ... 147
Interior protection
Function ... 97
Priming/deactivating ... 98

Internet radio
see TuneIn
iPhone®
see Smartphone integration®
ISOFIX child seat securing system
Fitting 60
Seats suitable for attaching 58

J

Jack
Declaration of conformity 29
Storage location 359
Jump-start connection 340
General notes 338

K

Key 74
Acoustic locking verification signal 75
Battery 76
Emergency key 76
Energy consumption 75
Features 74
Key ring attachment 76
Overview 74
Problem 77
Unlocking setting 75
Key functions
Deactivating 75
KEYLESS-GO
Locking the vehicle 79
Problem 80
Unlocking setting 75
Unlocking the vehicle 79
Kickdown 187
Using 187
Knee airbag 42

L

Lamp
see Interior lighting
Lamps (instrument display)
see Warning/indicator lamps
Lane detection (automatic)
see Active Lane Keeping Assist
Lane Keeping Assist
see Active Lane Keeping Assist
Light switch
Overview 138
Lighting
see Interior lighting
see Lights
Lights 138
Active headlamps 141
Adaptive Highbeam Assist 143
Adaptive Highbeam Assist Plus 144
Automatic driving lights 139
Changing bulbs 147
City lighting 142
Combination switch 140
Cornering light 142
Driving abroad (symmetrical low beam) 138
Hazard warning lights 141
Headlamp flashing 140
Headlamp range 139
High beam 140
Intelligent Light System 141
Light switch 138
Low beam 138
Motorway mode 142
Off-road light 142

Parking lights 138
Rear fog light 138
Responsibility for lighting systems 138
Setting the exterior lighting switch-off delay time 145
Standing lights 138
Switching the surround lighting on/off 146
Turn signal indicator 140

Limiter 213
Activating 214
Buttons 214
Calling up a speed 214
Deactivating 214
Function 213
Passive mode 213
Permanent setting 215
Requirements 214
Selecting 214
Setting a speed 214
Storing a speed 214
System limitations 213

Limiting speed
see Limiter

Limiting the opening angle (tailgate) 87

LINGUATRONIC
Function 274
Starting 275

Live Traffic Information
Switching the traffic information display on 288

Load compartment 117
Expanding 117

Load compartment cover
Extending/retracting 125
Notes 124
Removing/fitting 125

Load compartment floor
Adjustable 129

Loading 128
Adjustable load compartment floor 129
Bag hook 128
Coat hook 129
Notes 114
Roof luggage rack 130
Tie-down eyes 128

Loading guidelines 114

Loads
Securing 114

Locking/unlocking
Activating/deactivating the automatic locking feature 80
Additional door lock 77
Digital Vehicle Key sticker 79
Emergency key 81
KEYLESS-GO 79
Mobile phone 79
Opening the tailgate 82
Smartphone 79
Unlocking/opening the doors from the inside 78

Low beam
Switching on/off 138
Symmetrical low beam 138

Lubricant additives
see Additives

Luggage
Securing 114

Lumbar support
see Lumbar support (4-way)

Lumbar support (4-way) 103

M

Main beam
Changing bulbs 149
Maintenance
see ASSYST PLUS
Malfunction
Restraint system 37
Manual transmission
Operating the gearshift lever 182
Map 287
Displaying online map contents 288
Displaying weather information 288
Moving 287
Selecting the map orientation 287
Setting the map scale 287
Switching motorway information on/off 287
Massage programmes
Resetting the settings 109
Massage programs
Selecting the front seats 109
Massage settings
Resetting 109
Matt finish (cleaning instructions) 324
Maximum gross vehicle weight 370
Maximum speed
see Limiter
MBUX Interior Assistant
Switching the reading light for the driver and front passenger on/off contact-free 276
Switching the search light for the driver on/off 276
MBUX Interior Assistant (multimedia system) 275
Overview 275
MBUX multimedia system 271
Activating/deactivating standby mode 202
Configuring drive program I 181
Notes 271
Overview 271
Setting route-based speed adaptation 223
Standby mode function 201
Media
Overview of the functions and symbols 308
Media mode
Connecting Bluetooth® audio equipment 309
Medical aids 32
Memory function
Head-up display – Calling up stored settings 113
Head-up display – Storing settings 113
Operating 113
Outside mirrors – Calling up stored settings 113
Outside mirrors – Storing settings 113
Seat – Calling up stored settings 113
Seat – Storing settings 113
Menu (on-board computer)
Head-up display 269
Overview 266
Mercedes me app
Information 298
Mercedes me calls
Arranging a service appointment 296

Calling the Mercedes-Benz Customer Centre ... 295
Calling the Mercedes-Benz Customer Centre after automatic accident or breakdown detection ... 295
Consenting to data transfer ... 296
Information ... 295
Making a call via the overhead control panel ... 294
Transferred data ... 297

Mercedes me connect
Accident and breakdown management ... 293
Information ... 292
Transferred data ... 294

Mercedes-AMG vehicles
Notes ... 167

Mercedes-Benz emergency call system ... 301
Automatic emergency call ... 303
Information ... 301
Information on data transfer ... 304, 306
Manual emergency call ... 304
Overview ... 303
Self-diagnosis (Russia) ... 306
Starting/ending ERA-GLONASS test mode ... 306

Mercedes-Benz Link
see Smartphone integration®

Mercedes-Benz service centre
see Qualified specialist workshop

Message (multifunction display)
see Display message

Message memory ... 386

Mirrors
see Outside mirrors

Mobile phone
Frequencies ... 369
Locking the vehicle ... 79
Starting the vehicle ... 169
Transmission output (maximum) ... 369
Unlocking the vehicle ... 79
Wireless charging ... 135

Mobile phone
see Smartphone integration®
see Telephone

Model series
see Vehicle identification plate

MOExtended tyres ... 331

Motorway mode ... 142

MULTIBEAM LED ... 141

Multifunction display
Overview of the displays ... 268

Multifunction steering wheel
Overview of buttons ... 266

Multifunction steering wheel
see Steering wheel

Multimedia system
Activating/deactivating DSR ... 216
Collision detection (parked vehicle) ... 201

Multimedia system
see Display (multimedia system)
see MBUX Interior Assistant (multimedia system)
see MBUX multimedia system
see Touchpad

N

Navigation
Notes ... 282
Overview ... 284

Showing/hiding the menu 283
Switching on 283

Navigation
see Destination entry
see Map
see Route

Near Field Communication (NFC)
Locking the vehicle (digital vehicle key sticker) 79
Locking the vehicle (mobile phone) 79
Starting the vehicle (Digital Vehicle Key sticker) 169
Starting the vehicle (mobile phone) 169
Unlocking the vehicle (digital vehicle key sticker) 79
Unlocking the vehicle (mobile phone) 79

Neutral
Engaging 185

O

Occupant safety
see Airbag
see Automatic front passenger front airbag shutoff
see Automatic measures after an accident
see Pets in the vehicle
see Post-collision brake
see PRE-SAFE® (anticipatory occupant protection)
see PRE-SAFE® PLUS (anticipatory occupant protection plus)
see Restraint system
see Seat belt

Off-road driving 175

Off-road driving
see Off-road driving

Off-road light 142

Oil
see Engine oil

On-board computer 266
Displaying the service due date 314
Head-up display menu 269
Multifunction display 268
Operating 266
Overview of menus 266

On-board diagnostics interface
see Diagnostics connection

On-board electronics
Engine electronics 368
Notes 368
Two-way radios 368

Online services
Data storage 34

Online services
see In-Car Office

Open-source software 35

Opening the tailgate using your foot
HANDS-FREE ACCESS 86

Operating fluids
AdBlue® 376
Additives (fuel) 374
Brake fluid 379
Coolant (engine) 379
Engine oil 377
Fuel (diesel) 375
Fuel (petrol) 373
Notes 372
Windscreen washer fluid 380

Operating safety
Declaration of conformity (electromagnetic compatibility) 25

Declaration of conformity (jack) 29
Declaration of conformity (TIREFIT kit) .. 30
Declaration of conformity (wireless vehicle components) 25
Information 24
Operating system
see On-board computer
Outside mirrors 154, 155
Anti-dazzle mode (automatic) 155
Automatic mirror folding function 156
Folding in/out 154
Operating the memory function 113
Parking position 155
Setting 154
Overhead control panel
Overview 14
Owner's Manual
Vehicle equipment 24
Owner's Manual (digital) 20

P

Paint code 370
Paintwork (cleaning instructions) 324
Panorama sliding sunroof
see Sliding sunroof
Park position
Inserting 185
Selecting automatically 185
Parking
see Electric parking brake
Parking aid
see Parking Assist PARKTRONIC
Parking Assist PARKTRONIC 230
Activating 234
Adjusting warning tones 235
Deactivating 234
Function 230
Side impact protection 233
System limitations 230
Parking assistance systems
see Active Parking Assist
Parking brake
see Electric parking brake
Parking lights 138
Parking position
Outside mirrors 155
Storing the position of the passenger outside mirror using reverse gear 156
Parking up 201
Partitioning net
Attaching 126
PASSENGER AIR BAG status display
see Automatic front passenger front airbag shutoff
Pedestrian protection
see Active bonnet (pedestrian protection)
Period out of use
Activating/deactivating standby mode 202
Standby mode function 201
Permissible axle load 370
Permitted towing methods 341
Petrol 373
Petrol station prices 288
Pets in the vehicle 72
Plastic trim (Care) 326
Post-collision brake 50

Power supply
Switching on (Start/Stop button) 167
Power windows
see Side windows
PRE-SAFE® (anticipatory occupant protection) 49
Function 49
PRE-SAFE® Sound 49
Reversing measures 49
PRE-SAFE® PLUS (anticipatory occupant protection plus) 50
Function 50
Reversing measures 49
Preventative occupant protection system
see PRE-SAFE® (anticipatory occupant protection)
Profile 277
Creating a new profile 278
Notes 277
Selecting profile options 278
Programs
see DYNAMIC SELECT
Protection against collision 245
Protection of the environment
Notes 22
Take-back of end-of-life vehicles 22

Q

QR code
Rescue card 33
Qualified specialist workshop 31

R

Radar and ultrasonic sensors
Damage 203
Radio
Overview of the functions and symbols 310
Rain-closing feature
Side windows 89
Sliding sunroof 94
REACH regulation 32
Reading light
Switching on/off with hand movements 276
Reading light
see Interior lighting
Real wood (Care) 326
Rear door (child safety lock) 70
Rear fog light
Switching on/off 139
Rear seat
see Seat
see Third row of seats
Rear seat belt
Status display 41
Rear seat belt status display 41
Rear window
Changing the wiper blade 153
Rear window heater 157
Rear window wipers
Activating/deactivating 150
Rear-view mirror
see Outside mirrors
Recycling
see Take-back of end-of-life vehicles

Reducing agent
see AdBlue®
Refuelling
Refuelling the vehicle ... 189
Topping up AdBlue® ... 193
Registration
Vehicle ... 31
Remote control (stationary heater/ventilation)
Displays ... 163
Problems ... 164
Replacing the battery ... 163
Setting ... 162
Remote Online
Charging the starter battery ... 170
Cooling or heating the vehicle interior ... 170
Starting the vehicle ... 171
Replacing a bulb
see Changing bulbs
Rescue card ... 33
Reserve
Fuel ... 376
Residual heat ... 160
Restraint system ... 36
Basic instructions for children ... 51
Function in an accident ... 37
Functionality ... 36
Malfunction ... 37
Protection ... 36
Reduced protection ... 36
Self-test ... 36
Warning lamp ... 36
Reverse gear
Inserting ... 185
Reversing camera ... 235
Care ... 325
Function ... 235
Opening the camera cover (360° Camera) ... 241
Switching automatic operation on/off (360° Camera) ... 241
Reversing lights (changing bulbs) ... 149
Rims (Care) ... 325
Roll away protection
see HOLD function
Roller sunblind
Panorama sliding sunroof ... 91
Roof lining (care) ... 326
Roof load ... 381
Roof load display
Information ... 180
Roof luggage rack
Loading ... 130
Securing ... 130
Route ... 286
Calculating ... 286
Selecting options ... 286
Route guidance with augmented reality
Activating ... 286
Displaying street names and house numbers ... 286
Route-based speed adaptation
Function ... 222
Setting ... 223
Run-flat characteristics
MOExtended tyres ... 331
Running-in notes ... 171

S

Safety systems
see Driving safety system
Safety vest 328
Search light
Switching on/off with hand movements 276
Seat 99, 118
4-way lumbar support 103
Adjusting (electrically) 103
Adjusting (Seat Comfort) 102
Adjusting the backrest (rear) 105
Adjusting the rear seat (mechanically) 103
Adjusting the seat backrest angle (rear) 124
Adjustment (without Seat Comfort Package) 100
Configuring the settings 109
Correct driver's seat position 99
Folding back the backrest on the third row of seats 123
Folding the backrest (front passenger seat) forwards 117
Folding the backrest (rear) back 120
Folding the backrest (rear) forwards 118
Folding the backrest (rear) forwards to get in (third row of seats) 105
Folding the backrest on the third row of seats forwards 121
Operating the memory function 113
Resetting the settings 109
Setting options 16
Seat belt 38, 41
Activating/deactivating seat belt adjustment 41
Care 326
Fastening 40
Protection 38
Rear seat belt status display 41
Reduced protection 39
Releasing 41
Seat belt adjustment (function) 41
Warning lamp 41
Seat belt adjustment
Activating/deactivating 41
Function 41
Seat belt tensioners
Activation 37
Seat belt warning
see Seat belt
Seat cover (Care) 326
Seat heater
Activating/deactivating 109
Seat ventilation
Switching on/off 110
Selecting a gear
see Changing gears
Selector lever
see DIRECT SELECT lever
Self-test
Automatic front passenger front airbag shutoff 46
Sensors (Care) 325
Service
see ASSYST PLUS
Service centre
see Qualified specialist workshop
Service interval display
see ASSYST PLUS

Setting a speed
see Cruise control
Setting the map scale
see Map
Shift paddles
see Steering wheel gearshift paddles
Shifting gears
Gearshift recommendation 183, 187
Side airbag 42
Side impact protection 233
Side windows 88
Automatic function 89
Child safety lock in the rear 72
Closing 88
Closing using the key 90
Convenience closing 90
Convenience opening 90
Opening 88
Opening with the key 90
Problem 91
Rain-closing feature 89
Sliding sunroof 91
Automatic features 94
Closing 91
Closing using the key 90
Opening 91
Opening with the key 90
Problem 95
Rain-closing feature 94
Smartphone
Locking the vehicle 79
Unlocking the vehicle 79
Smartphone
see Smartphone integration®
see Telephone
Smartphone integration® 300
Overview 300
Snow chains 350
Socket (12 V) 131
Front centre console 131
Socket (115 V) 131
Rear 131
Socket (230 V) 132
Rear 132
Software update
System updates 280
Sound
PRE-SAFE® Sound 49
Wheels and tyres 350
Sound menu
Functions overview 313
Spare wheel
see Emergency spare wheel
Speed Limit Assist 248
Function/notes 248
Setting 249
System limitations 248
Speed limit for winter tyres
Setting 216
Standby mode
Activating/deactivating 202
Function 201
Standing lights 138
Start-off assist 230
Activating 230
Function 229
Start/stop button
Parking the vehicle 195
Starting the vehicle 168

Switching on the power supply or ignition 167
Start/stop function
see ECO start/stop function
Starter battery
Charging (Remote Online) 170
Starting assistance
see Jump-start connection
Starting the engine
see Vehicle
Starting-off aid
see Hill Start Assist
Stationary heater/ventilation
Displays (remote control) 163
Problems (remote control) 164
Replacing the battery (remote control) 163
Setting (MBUX multimedia system) 162
Setting (remote control) 162
Switching on/off (control panel) 160
STEER CONTROL
Function/notes 207
Steering wheel 266
Adjusting (manually) 111
Buttons 266
Steering wheel heater 111
Steering wheel gearshift paddles 186
Steering wheel heater
Switching on/off 111
Stowage areas
see Loading
see Stowage compartment
Stowage compartment 117
Armrest 117
Centre console 117
Door 117
Glove compartment 117
Stowage compartments
see Loading
see Stowage compartment
Stowage spaces
USB ports 117
Suggestions
Configuring 278
Sulphur content 373
Surround lighting
Switching on/off 146
Surround View
see 360° Camera
Suspension
Adaptive damping adjustment 230
Damping characteristics 230
SVHC (substances of very high concern) 32
Switch-off delay time
Exterior 145
Interior 147
Synchronisation function
Activating/deactivating (MBUX multimedia system) 159
Switching on/off (control panel) 159
System settings
Overview of the system settings menu 279

T

Tailgate 82
Closing 83

HANDS-FREE ACCESS 86
Limiting the opening angle 87
Opening 82
Opening dimensions 381
Unlocking (emergency key) 87

Tailpipes (Care) 325

Take-back of end-of-life vehicles 22
Protection of the environment 22

Tank content
AdBlue® 377
Fuel 376
Reserve (fuel) 376

Technical data
Axle load (trailer operation) 384
Fastening points (trailer hitch) 382
Information 368
Mounting dimensions (trailer hitch) 382
Notes (trailer hitch) 382
Overhang dimension (trailer hitch) 382
Tongue weight 384
Towing capacity (trailer operation) 383
Vehicle identification plate 370

Telephone 289, 291
Connecting a mobile phone (Passkey) 292
Connecting a mobile phone (Secure Simple Pairing) 292
Functions in the telephone menu 292
Locking the vehicle (mobile phone) 79
Notes 289
Operating modes 291
Starting the vehicle (mobile phone) 169
Telephone menu overview 291
Unlocking the vehicle (mobile phone) 79
Wireless charging (mobile phone) 135

Telephony operating modes
Bluetooth® Telephony 291

Temperature 157

Themes
Fastening 278

Third row of seats 121
Folding back the backrest on the third row of seats 123
Folding the backrest on the third row of seats forwards 121
Getting in/out 105
Height limit 100

Through-loading feature
see Load compartment
see Seat
see Third row of seats

Tie-down eyes 128

TIREFIT kit 332
Declaration of conformity 30
Storage location 332
Using 332

Tongue weight 384

Tool
see Vehicle tool kit

Top Tether 63

Touch Control
On-board computer 266
Operating 273

Touchpad 273
Operating 273

Touchscreen (media display)
Operating 273

Tow-away protection
Function ... 96
Priming/deactivating ... 97
Tow-bar system ... 263
Tow-starting ... 346
Towing away ... 342
Towing eye
Installing ... 345
Storage location ... 345
Towing methods ... 341
Traffic information
Switching on the display ... 288
Traffic Sign Assist ... 250
Function/notes ... 250
Setting ... 251
System limitations ... 250
Trailer hitch
Axle load ... 384
Bicycle rack ... 262
Care ... 325
Coupling up/uncoupling a trailer ... 260
Fastening points ... 382
Folding the ball neck out/in ... 258
General notes ... 382
Mounting dimensions ... 382
Notes ... 257
Overhang dimension ... 382
Socket ... 260
Tongue weight ... 384
Towing capacity ... 383
Trailer operation
Active Blind Spot Assist ... 253
Active Lane Keeping Assist ... 255
Bicycle rack ... 262
Coupling up/uncoupling a trailer ... 260
Folding the ball coupling in/out (MBUX multimedia system) ... 260
Folding the ball neck out/in ... 258
Notes ... 257
Socket ... 260
Trailer stabilisation
Function/notes ... 207
Trailer tow hitch
Folding the ball coupling in/out (MBUX multimedia system) ... 260
Transmission (problem) ... 186
Transmission position display ... 184
Transporting
Vehicle ... 344
Trim element (Care) ... 326
TuneIn ... 312
Calling up ... 312
Turn signal indicator ... 140
Activating/deactivating ... 140
Turn signal lights
Changing bulbs (rear) ... 149
Two-way radios
Frequencies ... 369
Notes on installation ... 368
Transmission output (maximum) ... 369
Tyre inflation compressor
see TIREFIT kit
Tyre pressure ... 352
Checking (tyre pressure monitoring system) ... 353
Notes ... 351
Restarting the tyre pressure loss warning system ... 355
Restarting the tyre pressure monitoring system ... 354

TIREFIT kit ... 332
Tyre pressure loss warning system (function) ... 354
Tyre pressure monitoring system (function) ... 353
Tyre pressure table ... 352

Tyre pressure loss warning system
Function ... 354
Restarting ... 355

Tyre pressure monitor
Function ... 353

Tyre pressure monitoring system
Checking the tyre pressure ... 353
Checking the tyre temperature ... 353
Restarting ... 354

Tyre pressure table ... 352

Tyre temperature
Checking (tyre pressure monitoring system) ... 353
Tyre pressure monitoring system (function) ... 353

Tyre tread ... 350

Tyre-change tool kit
Overview ... 359

Tyres
Changing hub caps ... 360
Checking ... 350
Checking the tyre pressure (tyre pressure monitoring system) ... 353
Fitting ... 363
Flat tyre ... 330
Interchanging ... 358
MOExtended tyres ... 331
Noise ... 350
Notes on fitting ... 355
Removing ... 363
Replacing ... 355, 360
Restarting the tyre pressure loss warning system ... 355
Restarting the tyre pressure monitoring system ... 354
Selection ... 355
Snow chains ... 350
Storing ... 359
TIREFIT kit ... 332
Tyre pressure (Notes) ... 351
Tyre pressure loss warning system (function) ... 354
Tyre pressure monitoring system (function) ... 353
Tyre pressure table ... 352
Unusual handling characteristics ... 350

U

Unlocking setting ... 75

Updates
Important system updates ... 280

USB port ... 133

V

Vehicle ... 169
Activating/deactivating standby mode ... 202
Additional door lock ... 77
Collision detection (parking) ... 201
Correct use ... 32
Data acquisition ... 33
Data storage ... 33
Diagnostics connection ... 30
Equipment ... 24

Implied warranty 32
Locking (automatically) 80
Locking (digital vehicle key sticker) 79
Locking (from inside) 78
Locking (KEYLESS-GO) 79
Locking (mobile phone) 79
Locking/unlocking (emergency key) 81
Lowering 364
Medical aids 32
Parking up 201
QR code rescue card 33
Qualified specialist workshop 31
Raising 361
REACH regulation 32
Registration 31
Standby mode function 201
Starting (Digital Vehicle Key sticker) 169
Starting (emergency operation mode) 169
Starting (mobile phone) 169
Starting (Remote Online) 171
Starting (start/stop button) 168
Switching off (start/stop button) 195
Towing 263
Unlocking (digital vehicle key sticker) 79
Unlocking (from inside) 78
Unlocking (KEYLESS-GO) 79
Unlocking (mobile phone) 79
Ventilating (convenience opening) 90

Vehicle data
Angle of approach/departure 381
Displaying (DYNAMIC SELECT) 181
Maximum gradient climbing ability 381
Roof load 381
Vehicle height 381
Vehicle length 381
Vehicle width 381
Wheelbase 381

Vehicle dimensions 381

Vehicle identification number
see VIN

Vehicle identification plate 370
EU general operating permit number ... 370
Paint code 370
Permissible axle load 370
Permissible gross mass 370
VIN 370

Vehicle interior
Cooling or heating (Remote Online) 170

Vehicle key
see Key

Vehicle maintenance
see ASSYST PLUS

Vehicle tool kit 332
TIREFIT kit 332
Towing eye 345

Ventilating
Convenience opening 90

Ventilation
see Climate control

Vents
see Air vents

VIN 370
Engine compartment 370
Identification plate 370
Windscreen 370

Vision
Demisting windows 160

W

Warning lamps
see Warning/indicator lamps

Warning system
see ATA (anti-theft alarm system)
Warning triangle
Removing 328
Setting up 329
Warning/indicator lamp
ABS warning lamp 450
Brake system warning lamp (red) 448
Brake system warning lamp (yellow) 448
Coolant warning lamp 444
Electric parking brake indicator lamp (red) 447
Electric power steering warning lamp (red) 444
Electrical fault warning lamp 446
Engine diagnosis warning lamp .. 446
ESP® OFF warning lamp 451
ESP® warning lamp flashes 451
ESP® warning lamp lights up 451
Fuel reserve warning lamp lights up 447
Restraint system warning lamp .. 442
Seat belt warning lamp flashes .. 442
Seat belt warning lamp lights up 443
The electric parking brake (yellow) indicator lamp 447
Trailer tow hitch warning lamp ... 443
Tyre pressure monitoring system warning lamp flashes 452
Tyre pressure monitoring system warning lamp lights up 453
Warning lamp for distance warning function 449
Warning/indicator lamps 440
Overview 440
PASSENGER AIR BAG 46
Warranty 32
Washer fluid
see Windscreen washer fluid
Washing by hand (care) 324
Water tank
see Air-water duct
Weather information 288
Web browser
Overview 299
Wheel change
Fitting a new wheel 363
Lowering the vehicle 364
Preparation 360
Raising the vehicle 361
Removing a wheel 363
Removing/fitting hub caps 360
Wheel change
see Emergency spare wheel
Wheel rotation 358
Wheels
Care 325
Changing hub caps 360
Checking 350
Checking the tyre pressure (tyre pressure monitoring system) 353
Fitting 363

Flat tyre 330
Interchanging 358
MOExtended tyres 331
Noise 350
Notes on fitting 355
Removing 363
Replacing 355, 360
Restarting the tyre pressure loss warning system 355
Restarting the tyre pressure monitoring system 354
Selection 355
Snow chains 350
Storing 359
TIREFIT kit 332
Tyre pressure (Notes) 351
Tyre pressure loss warning system (function) 354
Tyre pressure monitoring system (function) 353
Tyre pressure table 352
Unusual handling characteristics 350

Wi-Fi
Setting 281

Widescreen cockpit instrument display
Instrument cluster 12

Window airbag 42

Windows
see Side windows

Windows (Care) 325

Windscreen 157
Defrosting 157

Windscreen
see Windscreen
see Windshield

Windscreen washer fluid 380
Notes 380

Windscreen washer system
Topping up 320

Windscreen wipers
Changing the wiper blades 151
Switching on/off 150

Windshield 151
Changing the wiper blades 151

Wing
see Front wheel arch

Winter operation
Snow chains 350

Winter tyres
Setting the permanent speed limit 216

Wiper blades
Care 325
Replacing 151

Wireless charging
Function/notes 134
Mobile phone 135

Wireless vehicle components
Declaration of conformity 25

Workshop
see Qualified specialist workshop

Publication details

Internet
Further information about Mercedes-Benz vehicles and about Mercedes-Benz AG can be found on the following websites:

https://www.mercedes-benz.com

https://www.daimler.com

Documentation team
You are welcome to forward any queries or suggestions you may have regarding this Owner's Manual to the technical documentation team at the following address:

Mercedes-Benz AG, HPC: CAC, Customer Service, 70546 Stuttgart, Germany

©Mercedes-Benz AG: Not to be reprinted, translated or otherwise reproduced, in whole or in part, without written permission from Mercedes-Benz AG.

Vehicle manufacturer
Mercedes-Benz AG

Mercedesstraße 120

70372 Stuttgart

Germany

As at 23.09.2019

Digital – in the vehicle

Familiarise yourself with the contents of the Owner's Manual directly via the vehicle's multimedia system (menu item "Vehicle information"). Start with the quick guide or broaden your knowledge with practical tips.

Vehicle document wallet

Here you can find comprehensive information about operating your vehicle and about services and guarantees in printed form.

Digital – on the Internet

You can find the Owner's Manual on the Mercedes-Benz homepage.

Digital – as an App

The Mercedes-Benz Guides App is available free-of-charge in familiar App stores.

2475844006Z102

Order no. P247 0409 02 Part no. 247 584 40 06 Z102
Edition ÄJ2020-1a

Apple® iOS

Android™