A-Class

Operator's Manual +

Mercedes-Benz

F177 0066 02

Front passenger airbag warning

WARNING Risk of injury or death due to an enabled co-driver airbag

If the co-driver airbag is enabled, a child on the co-driver seat may be struck by the co-driver airbag during an accident.

- NEVER use a rearward-facing child restraint system on a seat with an ENABLED FRONT AIRBAG. DEATH or SERIOUS INJURY to the CHILD can occur.

Observe the chapter "Children in the vehicle".

Welcome to the world of Mercedes-Benz

Before your first drive, please read this Owner's Manual carefully and familiarise yourself with your vehicle. For your own safety and a longer service life of the vehicle, follow the instructions and warning notices in this Owner's Manual. Disregarding them may lead to damage to the vehicle or injury to people.

The standard equipment and product description of your vehicle may vary and depends on the following factors:

- Model
- Order
- National version
- Availability

Your vehicle may therefore differ from that shown in the descriptions and illustrations in individual cases.

The illustrations in this Owner's Manual show a left-hand drive vehicle. On right-hand drive vehicles, the layout of vehicle parts and controls differs accordingly.

Mercedes-Benz is constantly developing its vehicles further.

Mercedes-Benz therefore reserves the right to introduce changes in the following areas:

- Design
- Equipment
- Technical features

The following documents are components of the vehicle:

- Digital Owner's Manual
- Printed Owner's Manual
- Service Booklet
- Supplementary manuals relating to specific equipment
- Supplementary documents

Keep these documents in the vehicle at all times. Ensure that all documents are in the vehicle or passed on in the event of sale or rental.

Disclaimer

The following online version of the Owner's Manual describes all models as well as all the standard and optional equipment of your vehicle. Country-specific differences in the language variants are possible. Note that your vehicle may not be fitted with all features described. This is also the case for safety-relevant systems and functions.

Please contact your authorised Mercedes-Benz dealer if you would like to have a printed Owner's Manual for other vehicle models and vehicle model years. The online version is the current valid Owner's Manual version. Possible variations to your vehicle may not be taken into account as Mercedes-Benz constantly updates their vehicles and equipment to the state of the art and introduces changes in design and equipment.

Please also read the printed Owner's Manual, any supplementary documents and the digital Owner's Manual in the vehicle.

Copyright
All Rights Reserved. All texts, images, graphics, are subject to Copyright and other laws for the protection of intellectual property. They may not be copied for commercial purposes or for transmission, nor changed and used on other websites.

Symbols 6

Quick start and Tips 7
Children in the vehicle 7
Touch-sensitive controls 8
Radio 9
Wi-Fi hotspot 9
Connecting a mobile phone 10
MBUX Interior Assistant 10
MBUX Voice Assistant 11
ENERGIZING Packages 12
Driving Assistance package 12
Parking Package 13
High-voltage battery AC charging (mode 2 or 3) 13
High-voltage battery direct current charging (mode 4) 13
Destination entry navigation 14
New multimedia system features 15
At the filling station 22
Preparing for a holiday 31
Luggage and loading 35
Ice and snow 42
Help in the event of a breakdown 48
Expert tips 56

At a glance 62
Cockpit 62
Cockpit (plug-in hybrid) 64
Indicator and warning lamps (standard) 66
Indicator and warning lamps 68
Overhead control panel 70
Door operating unit and seat adjustment 72
Emergencies and breakdowns 74

Digital Owner's Manual 76
Calling up the Digital Owner's Manual 76

General notes 77
Protection of the environment 77
Take-back of end-of-life vehicles 77
Mercedes-Benz GenuineParts 78
Touch-sensitive control elements 79
Mercedes me App 79
Operating safety 80
Fitting the licence plate onto the front licence plate bracket 83
Declarations of conformity and notes on driving in different countries 83
Diagnostics connection 90
Qualified specialist workshop 91
Vehicle registration 92
Correct use of the vehicle 92
REACH regulation 92
Notes for persons with electronic medical aids 93
Implied warranty 93
QR code for rescue card 94
Data storage 94
Copyright 97

Occupant safety 98
Brief overview of most important points 98
Information on the automatic functions of the restraint system 105
Purpose and function of the restraint system 108
Seat belts 113
Airbags 114

Children in the vehicle **115**
Brief overview of most important points 115
Important safety notes 116
Suitable child restraint systems for the transport of children 122
Suitable seats for attaching child restraint systems 127
Securing the child restraint system 131
Child safety locks 137
Occupant presence reminder 139

Opening and closing **141**
Key 141
Doors 145
Boot 150
Side windows 153
Sliding sunroof 157
Anti-theft protection 161

Seats and stowing **164**
Notes on the correct driver's seat position .. 164
Notes on grab handles 165
Seats 165
Steering wheel 178
Easy entry and exit feature 179
Memory function 181
Stowage areas 183
Cup holders 191
Sockets 194
Wireless charging of the mobile phone and connection with the exterior aerial 195
Fitting/removing the floor mats 198

Light and sight **199**
Exterior lighting 199
Interior lighting 208
Changing bulbs (only for vehicles with halogen headlamps) 209
Windscreen wipers and windscreen washer system 211
Mirrors 213

Climate control **217**
Overview of climate control systems 217
Operating the climate control system 220

Driving and parking **229**
Driving 229
DYNAMIC SELECT 251
Automatic transmission 257
Function of 4MATIC 265
Refuelling 266
Charging the high-voltage battery (plug-in hybrid) 273
Parking 290
Driving and driving safety systems 302
Trailer hitch 371
Bicycle rack function 376
Vehicle towing instructions 378

Driver's display **379**
Notes on the driver's display 379
Operating the driver's display 379
Driver display menus 380
Head-up display 393
Vehicles with a 48 V on-board electrical system 395
Function of the power meter 396
Overview of status indicators on the driver's display 396

Overview of status indicators on the driver's display (Mercedes-AMG vehicles) 397

MBUX Voice Assistant 399
Notes on operating safety 399
Operation 399
Using MBUX Voice Assistant effectively 401
Essential voice commands 402

MBUX multimedia system 407
Overview and operation 407
System settings 432
AMG TRACK PACE 441
Plug-in hybrid settings 446
Fit & Healthy 447
Navigation and traffic 451
Telephone 493
Online and Internet functions 528
Media 536
Radio 544
Sound 548

Maintenance and care 552
ASSYST PLUS service interval display 552
Maintenance Management 553
Telediagnostics 553
Engine compartment 554
Cleaning and care 563

Breakdown assistance 572
Emergency 572
Flat tyre 574
Battery (vehicle) 581
Tow-starting or towing away 588
Electrical fuses 594

Wheels and tyres 598
Notes on noise or unusual handling characteristics 598
Notes on regularly inspecting wheels and tyres 598
Notes on snow chains 598
Tyre pressure 599
Wheel change 603
Emergency spare wheel 613

Technical data 616
Notes on technical data 616
On-board electronics 616
Regulatory radio information 618
Vehicle identification plate, VIN and engine number overview 734
Operating fluids 735
Vehicle data 746
Trailer hitch 751

Display messages and warning/indicator lamps 755
Display messages 755
Warning and indicator lamps 838

Index 859

In this Owner's Manual, you will find the following symbols:

WARNING Danger due to not observing the warning notices

Warning notices draw your attention to hazards that may endanger your health or life, or the health or life of others.

▶ Observe the warning notices.

ENVIRONMENTAL NOTE Environmental damage due to failure to observe environmental notes

Environmental notes include information on environmentally responsible behaviour or environmentally responsible disposal.

▶ Observe environmental notes.

NOTE Damage to property due to failure to observe notes on material damage

Notes on material damage inform you of risks which may lead to your vehicle being damaged.

▶ Observe notes on material damage.

ⓘ These symbols indicate useful instructions or further information that could be helpful to you.

▶	Instruction
(⟶ page)	Further information on a topic
Display	Display in the central display
⤳▶	Highest menu level, which is to be selected in the multimedia system
▶▶	Relevant submenus, which are to be selected in the multimedia system
*	Indicates a cause

Children in the vehicle

Safe transportation of children in the vehicle

- ▶ Always observe when children are travelling in the vehicle (→ page 116)
- ▶ Important warning notices (→ page 117)
- ▶ Recommended child restraint systems (→ page 124)
- ▶ Suitable seats in the vehicle for fitting a child restraint system (→ page 115)
- ▶ Approval categories for child restraint systems (→ page 122)
- ▶ Suitability of seats for attaching ISOFIX child restraint systems (→ page 127)
  - Fitting the ISOFIX child restraint system on the rear seat (→ page 133)
- ▶ Fastening a Top Tether belt (→ page 134)
- ▶ Suitability of seats for attaching belt-secured child restraint systems (→ page 129)
  - Notes on vehicles without automatic front passenger airbag shutoff (→ page 122)
  - Notes on rearward-facing and forward-facing child restraint systems on the front passenger seat (→ page 120)
  - Securing the child restraint system with the seat belt (→ page 136)
- ▶ Automatic front passenger airbag shutoff (→ page 120)
- ▶ Child safety locks for the rear side windows (→ page 138)
- ▶ Child safety locks for the rear doors (→ page 137)

Touch-sensitive controls

Overview of touch-sensitive controls

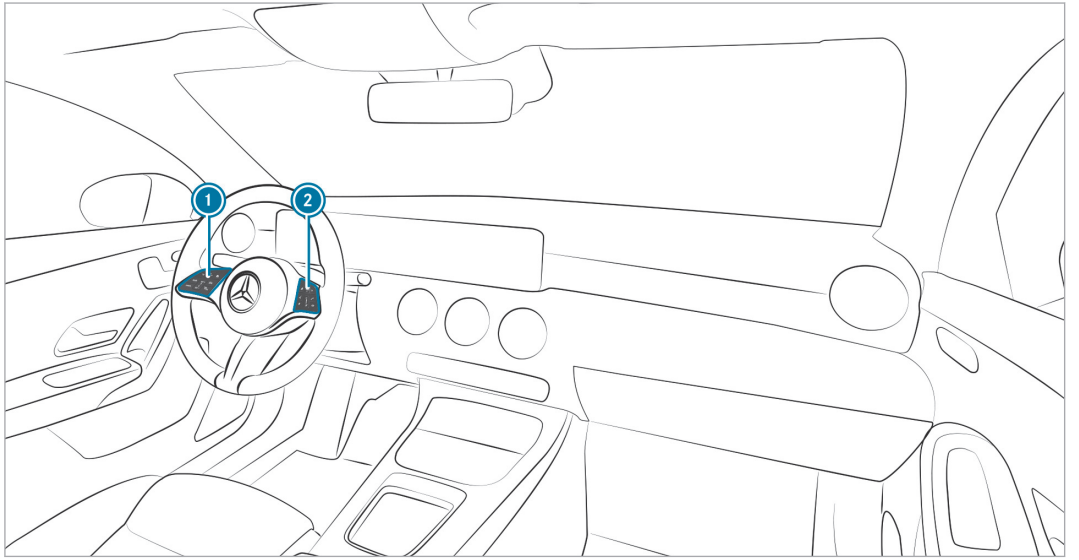

F177 0066 02

1. Control panel:
   Driver's display
   [LIM] Active Distance Assist DISTRONIC and variable limiter
2. Control panel for the MBUX multimedia system

▶ Observe the notes on the touch-sensitive controls (→ page 79).

Radio

Operating radio

▶ **To switch to radio:**
- Briefly press [⌂] on the multimedia system display.
- Tap on [♯].

▶ **To set the frequency band:**
- Briefly press [⌂] on the multimedia system display.
- Tap on [♯].
- Select a frequency band or a favourite.

▶ **To set a radio station:**
- Briefly press [⌂] on the multimedia system display.
- Tap on [♯].
- Swipe to the left or right on the control element or select a radio station.

▶ **To call up the radio station list:**
- Briefly press [⌂] on the multimedia system display.
- Tap on [♯].
- Select [≡].

▶ **To search for radio stations using station names or frequency entry:**
- Briefly press [⌂] on the multimedia system display.
- Tap on [♯].
- Select [🔍].
- Enter a station name or frequency.
- Select a station.

▶ **To store radio stations:**
- Briefly press [⌂] on the multimedia system display.
- Tap on [♯].
- Select [☆].

▶ **To set the traffic information service volume increase:**
- Briefly press [⌂] on the multimedia system display.
- Tap on [⚙].
- Select System.
- Select Audio.
- Select Navigation & traffic announcements.
- Set a value for Traffic announc. vol. increase.

Wi-Fi hotspot

Setting up a Wi-Fi hotspot

Generally, two types of Wi-Fi connection are available:

- Using the multimedia system as a Wi-Fi hotspot

The multimedia system serves as a Wi-Fi hotspot for mobile communication devices such as a smartphone or tablet PC.

The data volume of the vehicle or an already connected tethering device is used for the data connection.

Data volumes must be purchased via the Mercedes me Portal.

The use of the vehicle data tariff by external devices is not available in all countries.

- Using a mobile communication device as a Wi-Fi hotspot (tethering)

  An external Wi-Fi hotspot is accessed for the Internet connection of the multimedia system.

  The data tariff of the mobile communication device via Acquired package is used for the data connection.

Options for setting up a connection:

- QR code

  The connection is set up by scanning the QR code shown on the multimedia system.

- NFC

  The connection is set up by placing the mobile communication device in the NFC interface of the vehicle.

- Security key

  The connection is established by entering the security key displayed on the multimedia system.

Connecting a mobile phone

Connecting a mobile phone

▶ **Activating Bluetooth®:**
- Make sure that the mobile phone Bluetooth® is switched on.
- Tap on [⌂] on the central display or media display.
- Select Settings.
- Select System.
- Select Internet and Bluetooth.
- Activate Bluetooth®.

▶ **Searching for a mobile phone:**
- Tap on [⌂] on the central display or media display.
- Select Phone.
- Select [⚙].
- Select Devices.
- Select Devices.
- Select Connect new device.

▶ **Authorising a mobile phone:**
- Select a mobile phone.

A code is displayed in the multimedia system and on the mobile phone.

▶ If the codes match, confirm the code on the mobile phone.

MBUX Interior Assistant

Using the MBUX Interior Assistant

If the vehicle is fitted with the MBUX Interior Assistant, selected functions of the multimedia system can be operated contact-free

The Assistant recognises driver and front passenger interactions.

The Assistant supports vehicle and infotainment functions at three interaction levels:

- INTELLIGENT

  The Assistant recognises vehicle occupants and objects automatically and activates functions.
- REACTIVE

  The Assistant recognises the natural body language of a vehicle occupant and carries out functions automatically, appropriate to the situation.
- CONTACTLESS

  The vehicle occupant actively requests a function using a hand movement or pose.

The Assistant offers functions for the following:

- SAFETY

  The Assistant supports vehicle occupants with the use of restraint systems.
- COMFORT

  The Assistant enhances comfort by automating functions inside the vehicle and supporting natural interaction with the vehicle.
- INFOTAINMENT

  The Assistant facilitates operation of the Infotainment functions.

One application example is switching the reading light on or off.

Carrying out operation of the reading light for the driver and front passenger

▶ Move your hand up and down under the inside rearview mirror.
The reading light is switched on or off.

MBUX Voice Assistant

Operating the MBUX Voice Assistant

You can use the MBUX Voice Assistant to operate the following functions depending on the vehicle equipment:

- Telephone
- Text message and e-mail
- Navigation
- Radio and media
- Vehicle functions
- Online functions

Examples of possible voice commands:

- To operate the phone: **Call my father.**
- To manage e-mails: **Show me my new e-mails.**
- To operate the navigation: **Search for an Asian restaurant, but not Japanese, in South London.**
- To operate the radio: **Which station am I currently listening to?**
- To operate media: **Play a similar track.**

- To operate climate control: **My feet are cold.**
- To operate vehicle functions: **Open the window.**
- To call up the weather: **Will it be sunny tomorrow?**
- To ask a general knowledge question: **Who painted the picture "The Scream"?**

ENERGIZING Packages

Operating ENERGIZING COMFORT

▶ **To start an ENERGIZING programme:**
- Briefly press [⌂] in the multimedia system display.
- Select Comfort.
- Select ENERGIZING COMFORT.
- Select a programme and start with [▶].

▶ **To configure an ENERGIZING programme:**
- Select a programme.
- Select Settings.
- Switch the functions included in the programme on or off.

▶ **To start a training programme:**
- Select Training.
- Select a programme and start with [▶].
- To activate fragrancing for training, select Air freshener.

▶ **To start tips:**
- Select Tips.
- Select an area of the body and start with [▶].

Driving Assistance package

Functions of the Driving Assistance Package

The Driving Assistance Package contains various functions that assist you when driving. For this purpose, your vehicle uses cameras and radar sensors to monitor the area in front of, behind, or beside the vehicle.

The following functions are included in the Driving Assistance Package, depending on country-specific availability:

▶ Active Distance Assist DISTRONIC (→ page 318)

You can watch an animation on this topic via the following link:

▶ Active Speed Limit Assist (country-dependent) (→ page 324)

You can watch an animation on this topic via the following link:

▶ Route-based speed adaptation (country-dependent) (→ page 325)

▶ Active Brake Assist (→ page 330)

You can watch an animation on this topic via the following link:

▶ Evasive Steering Assist function of Active Brake Assist (→ page 330)

You can watch an animation on this topic via the following link:

▶ Active Steering Assist (country-dependent) (→ page 327)

You can watch an animation on this topic via the following link:

- Active Emergency Stop Assist (country-dependent) (→ page 329)
- Active Stop-and-Go Assist (country-dependent)
- Active Blind Spot Assist with exit warning (→ page 343)
- Active Lane Keeping Assist (→ page 345)

You can watch an animation on this topic via the following link:

Parking Package

Functions of the Parking Package

Depending on country-specific availability, your vehicle may be equipped with various functions to assist you with parking and Manoeuvering. For this purpose, your vehicle uses cameras and ultrasonic sensors to monitor the area around the vehicle.

You can watch an animation on this topic via the following link:

Depending on the equipment level, the following systems and functions are part of your Parking Package:

- **Reversing camera:** monitors the area to the rear of the vehicle and displays this in the driver display (→ page 350).
- **360° Camera:** a system that consists of four cameras which cover the immediate surroundings of the vehicle and display this in the driver display (→ page 353).
- **Parking Assist PARKTRONIC:** an electronic parking assistance system which monitors the area surrounding your vehicle and the distance to obstacles in the vicinity using ultrasound (→ page 358).
- **Active Parking Assist:** is an electronic parking assistance system which assists you when parking or leaving a parking space by changing gears, accelerating, braking and steering the vehicle (→ page 362).

You can watch an animation on this topic via the following link:

High-voltage battery AC charging (mode 2 or 3)

AC charging (mode 2 or 3)

Starting and ending the charging process

- More notes on charging the high-voltage battery (→ page 273)
- Overview of the charging cable control panel (→ page 280)

High-voltage battery direct current charging (mode 4)

DC charging (mode 4)

Starting and ending the charging process

- Further notes on charging the high-voltage battery (→ page 273)
- Overview of the charging cable control panel (→ page 280)

Destination entry navigation

Entering a navigation destination

▶ Briefly press [⌂] on the multimedia system display.
The zero layer is shown.

▶ Select [🔍].

Select the following options for destination entry:

- Enter a POI, an address or a three-word address in the input line.

  Online search results for POIs (if available) may contain additional information, for example opening times and prices. The information is provided by an online map service.

  You can find further information about 3 word addresses at: http://+what3words.com

- Select a destination suggestion.

  Requirements:

  The Navigation option is switched on in the user settings for Suggestions.

  The multimedia system has gathered sufficient data in order to show destination suggestions.

- Select Previous destinations.

  Select a previous destination.

  You can save the destination as a favourite .

- Select POIs.

  Select a POI category, e.g. [P] or enter a POI name or POI category in the input line.

  If search results are displayed, limit them with Filter, for example by search position or the desired travel time.

- Select Contacts.

  Requirements:

  A mobile phone is connected to the multimedia system and contacts have been downloaded.

  The contact contains a navigable address.

- Enter the geocoordinates as latitude and longitude in the input line.

  Example 1: 47°58'11"N 7°57'25"E (degrees, minutes, seconds and compass direction)

  Example 2: 47.969722 7.956944 (decimal degrees)

- Select a destination on the map.

- Select Favourites.

  Requirements:

  The destinations have been saved as favourites.

- Select Received destinations.

  Requirements:

  There is an Internet connection for receiving external destinations.

  The destinations have been sent to the vehicle.

New multimedia system features

Information about the telephone menu

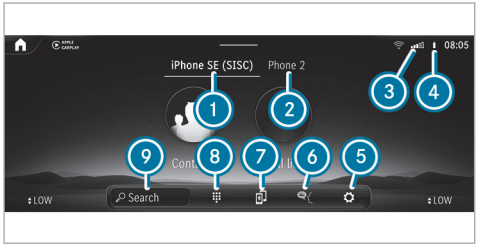

1. Bluetooth® device name of the currently connected mobile phone/of the mobile phone
2. Bluetooth® device name of the other currently connected mobile phone/of the mobile phone
3. Signal strength of the mobile phone network
4. Battery status of the connected mobile phone
5. Options
6. Messages
7. Calls up my devices
8. Numerical pad
9. Starts contact search

Telephone menu overview

Via the telephone menu you can use the functions in connection with your mobile phone.

The following functions can be used:

- Call lists
- Contacts
- Messages
- Device manager

Using call lists

If your mobile phone supports the PBAP Bluetooth® profile, the call lists from the mobile phone are displayed in the multimedia system.

The following functions are available:

- Making calls from the call list
- Opening contacts on the call list

Messages

In the message menu you can receive text messages and create and send them with the help of the MBUX voice assistant. In addition, you can conveniently use the read-aloud function during the journey.

Device manager

In the device manager, you can connect your mobile phone with the multimedia system.

You have the option of using your mobile phone alone in single telephone mode or together with another mobile phone in two phone mode.

Using contacts

If you permit the multimedia system to access the contacts in your mobile phone, you can use these in the vehicle. You can store up to 8,000 contacts.

The following options are available to you via the contacts menu:

- Making telephone calls (calling a contact)
- Navigation
- Composing messages with the help of the MBUX voice assistant
- Additional options

The contacts from your mobile phone can be downloaded automatically or manually.

Conducting a call

When conducting a call, additional functions are available apart from making, accepting or rejecting a call. For example, you can switch between calls, conduct a call with several participants or conference calls.

It is also possible to accept or reject waiting calls. If you receive a call while already in a call, a message is displayed.

During a call you can activate the following functions:

- Microphone off
- Fade in the numerical pad to send DTMF tones
- Add a call
- Hands-free mode to transfer the call to the front or rear passenger compartment
- Privacy mode to transfer the call to the telephone or headphones

Information about navigation

Zero layer with digital map

1. Navigation module (reduced view)
   Route guidance active:
   The navigation module shows the information relevant to the route in the zoomed-out view, e.g. the destination or a traffic delay
   [⊗] ends the current route guidance
   Tapping opens the navigation module in the expanded view with the route overview
2. Enters a destination
3. Searches for a parking space
4. Sets map orientation [⊘] and map type
5. Current vehicle position (vehicle symbol or arrow)
6. Display area with entertainment sources, phone, active applications and suggestions
7. Navigation window shows the next manoeuvre (zoomed out view) or the route monitor (zoomed in view)
   Route guidance active: route monitor shows, e.g. route sections, upcoming driving manoeuvres with lane recommendations, destination, traffic delays, 3D images at motorway exits, online content
   [🔊] Switches off navigation announcements
   [🔇] Switches on navigation announcements

When you switch on the multimedia system or after selecting [⌂], the digital map is shown in the zero layer.

The navigation system offers many options for destination entry, route planning and route guidance. The traffic situation is taken into account during route guidance. When using route guidance with augmented reality, additional information can be shown in a camera image before a turning manoeuvre. Services and apps help you reach the destination quickly, safely and in comfort.

Start entering the destination via ② on the digital map. You can enter the POI, address or contact as the destination on-board or search online using a map service. Or you select a previous destination. The destination can be stored here as a favourite or be saved as an address for home and work. When the Allow destination suggestions option is switched on, the vehicle makes suggestions based on your visited navigation destinations. If external destinations and routes are received from apps or services, these are also available.

The following options are available for route planning, for example:

- Route options:
  e.g. avoid or use toll roads, tunnels, unpaved roads or areas
- Intermediate destinations
- Alternative routes
- Commuter route
- Automatic filling station and service station search

You can record and save routes then select or share them with a USB device.

Lane recommendations are shown during route guidance on multi-lane roads. When driving on a motorway, service facilities on the route ahead can be shown and used for route guidance.

The Live Traffic Information service takes the current traffic situation into account. The map can show the current traffic flow, traffic incidents or warning messages, e.g. before the end of traffic jams that pose a risk.

Hazardous situations on public roads are detected automatically by the vehicle via Car-to-X-Communication or these can be reported by the driver. The early warning makes it possible to adapt your driving characteristics in good time. Accidents, broken-down vehicles, weather hazards or a vehicle with activated hazard warning lights are shown on the map.

For route guidance with augmented reality, information objects such as arrows indicating a turn, street names and house numbers are shown in a video image during the driving manoeuvre or at traffic lights.

The map shows map data from the database or from an online map service. In small map scales, buildings are shown as realistic images. The online map update service makes possible the updating of the map data.

Weather information and data from other services can be shown on the map. Multi-storey car parks with the corresponding equipment, deliver data about the current occupancy and about parking charges, for example.

The options offered vary depending on the country, vehicle equipment and available services.

Navigation module (expanded view) with route overview

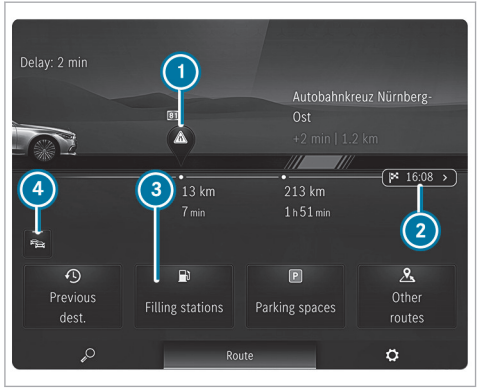

Example: route guidance is active

1. Traffic incident on the route
   Distance from current vehicle position and remaining driving time
2. Destination
3. Searches for a filling station
4. Switches traffic information display on or off

Information on radio

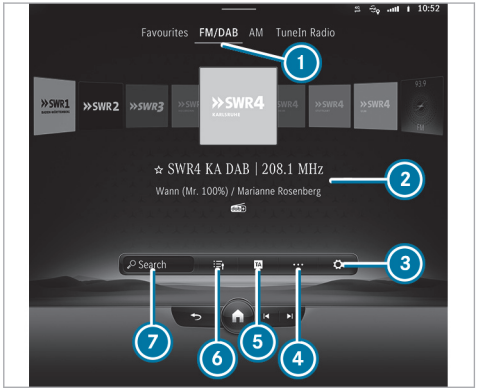

1. Active frequency band
2. Station name or set frequency
3. Settings
4. Additional options
5. Switches on traffic reports
6. Station list
7. Search

Using the radio menu you can play a multitude of radio stations and use the Internet Radio TuneIn. Search for your preferred stations and save these as favourites or in station lists.

ⓘ The function of TuneIn Internet radio is country-dependent.

Radio text: this function shows you the station name, the track and the artist for the song currently playing, for example.

DAB: with the DAB function, graphically formatted extra information about a station can be shown, e.g. logos, album covers, music tracks, programmes, news or also service information.

Traffic announcements: Traffic messages can be displayed by pressing TA.

Information on media

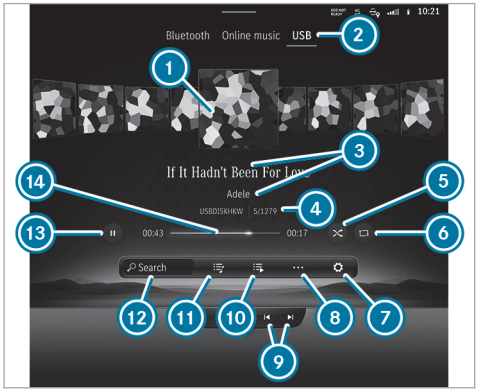

1. Album cover
2. Active media source
3. Track and artist
4. Active data storage medium and current track number/track in playback list
5. Random playback
6. Repeat
7. Settings
8. Additional options
9. Previous or next track and fast rewind or fast forward
10. Additional categories
11. Playlists and categories
12. Media search
13. Controls playback
14. Timeline

Using the Media application, you can set and use the audio and video functions of your multimedia system. You can listen to music or look at videos, for example.

USB: Using the USBmenu, you can play back your own audio or video data from a data storage medium connected by USB.

Bluetooth®: Using the Bluetooth menu, you can connect Bluetooth® audio equipment with the multimedia system and play back the available tracks on the audio equipment. Connecting the device can be conveniently handled in the device manager, so you can complete all settings with just a few clicks.

Online music: The Online music menu allows you to access music streaming services.

Notes on comfort

The Comfort menu makes all the functions available that contribute to your comfort when driving or taking a break.

Seat Comfort

The Seat menu allows you to flexibly adjust the contours of the seats to your needs by adjusting the side bolsters and lumbar support independently. You can save these settings in your Mercedes me profile, so they can be called up each time you drive. With the Seat kinetics function, you can start a programme that causes slight modifications of the seat position when you are driving. These modifications promote a healthy back.

Massage

In the Massage menu you will find the massage programmes that are available for your vehicle. By selecting the desired program you start it directly and it runs for a period of approximately ten

minutes, depending on the program selected. With the High intensity function you can increase the effect of the massage programme.

Ambient light

In the Ambient light menu you can set the colour and brightness for your ambient lighting. Using the Link zones function, the ambience, accent and impression zones can be regulated separately so that you can set the lighting of your vehicle individually.

Information about smartphone integration

Using the Smartphone Integration menu, various applications are available that can bring the functions of your mobile phone to the multimedia system display. Operation can by carried out via the touchscreen or voice control, for example.

Only one mobile phone at a time can be connected via Smartphone Integration to the multimedia system. Also for use with two phone mode with Smartphone Integration, only one additional mobile phone can be connected using Bluetooth® with the multimedia system.

Use Android Auto for mobile phones with the Android operating system and use Apple CarPlay® with your iPhone®. The full functionality of Android Auto and Apple CarPlay® is only possible with an Internet connection.

Information on AMG Performance

Using the AMG Performance menu, you can call up information about the performance of your vehicle.

Depending on the vehicle the following menus are available:

- Energy flow

  Visualisation of the energy flow in the vehicle
- Consumption

  Display of the current and average consumption values of the vehicle
- Vehicle

  Display of vehicle data
- Engine

  Display of engine data such as current power and torque
- Drive

  Display of current data of various drive elements such as current, voltage and temperature

Information about vehicle info

You can have important vehicle information displayed in the Info menu. At a glance you will have an overview of vehicle and engine data or current consumption values, for example. In addition, you can call up the Digital Owner's Manual via the Owner's Manual menu item.

Vehicle data

The following data will be shown, for example:

- Activity of the acceleration and brake pedal
- Activity of the suspension strut
- Wheel angle
- G-force display for the linear and lateral acceleration

Engine data

The following data is shown:

- Transmission oil temperature
- Engine/coolant temperature
- Performance
- Torque
- Boost pressure

Consumption data

Depending on your driving style, this display shows the current and average fuel consumption. Together with the displays of vehicle and engine data, you can adapt your driving style to be as efficient and economical as possible.

Information about In-Car Office

Using the In-Car Office menu, you can connect your online services with the multimedia system.

You then have multiple options available:

- Organising your meetings and telephone conferences.
- Managing your e-mails and appointments.
- Have navigation to the location for a meeting.

Information about Mercedes me Apps

Using the Mercedes me Apps menu, various services and online functions are available to you:

- Managing Mercedes me services
- Using the dashcam
- Using the web browser to surf the Internet

You require a user account, and have to connect your vehicle with the user account, in order to be able to use services.

ⓘ If the Mercedes me App is available on a mobile phone, the vehicle connection can be accomplished using the QR code shown.

Please not that the available features are country-dependent.

Information on settings

In the Settings you can set the basic configuration for your multimedia system and the vehicle. You have access to all functions in this menu, from switching the driver assistance systems on and off to display and language settings.

The settings are structured in the following menus:

- Assistance
- Vehicle
- Lights
- System

Assistance menu

With the Assistance menu you have direct access to the driver assistance systems which are installed in your vehicle and can either switch these on or off, or configure according to your wishes.

Vehicle menu

Here you can activate the following functions, for example:

- Automatic folding in of the outside mirrors when parking the vehicle
- Automatic adjustment of the seat and steering wheel, for comfortable entry and exit from the vehicle

- Automatic activation of the 360° camera when selecting reverse gear

Light menu

All the light settings can be carried out in the Lights menu. You can activate or deactivate the Intelligent Light System here, set for how long your vehicle should remain lit after parking or unlocking or switch the function off.

System menu

All important settings for the multimedia system can be carried out in the System menu.

You can carry out the following settings, for example:

- Setting the system language
- The configuration of Wi-Fi and Bluetooth®
- Setting of time and date

At the filling station

Refuelling the vehicle

WARNING Risk of fire or explosion from fuel

Fuels are highly flammable.

- ▶ Fire, naked flames, smoking and creating sparks must be avoided.
- ▶ Before refuelling, switch off the vehicle and, if fitted, the stationary heater and keep switched off during filling.

WARNING Risk of injury from fuels

Fuels are poisonous and hazardous to your health.

- ▶ Do not swallow fuel or let it come into contact with skin, eyes or clothing.
- ▶ Do not inhale fuel vapour.
- ▶ Keep children away from fuel.
- ▶ Keep doors and windows closed during the refuelling process.

If you or other people come into contact with fuel, observe the following:

- ▶ Immediately rinse fuel off your skin with soap and water.
- ▶ If fuel comes into contact with your eyes, immediately rinse them thoroughly with clean water. Seek medical attention immediately.
- ▶ If you swallow fuel, seek medical attention immediately. Do not induce vomiting.
- ▶ Change immediately out of clothing that has come into contact with fuel.

WARNING Risk of fire and explosion due to electrostatic charge

Electrostatic charge can ignite fuel vapour.

- ▶ Before you open the fuel filler cap or take hold of the pump nozzle, touch the metallic vehicle body.

▶ To avoid creating another electrostatic charge, do not get into the vehicle again during the refuelling process.

⚠ WARNING Risk of fire from fuel mixture

Vehicles with a diesel engine:

If you mix diesel fuel with petrol, the flash point of the fuel mixture is lower than that of pure diesel fuel.

While the vehicle is running, component parts in the exhaust system may overheat without warning.

▶ Never refuel using petrol.

▶ Never mix petrol with diesel fuel.

! NOTE Damage caused by the wrong fuel

Vehicles with a petrol engine:

Even small amounts of the wrong fuel could result in damage to the fuel system, the engine and the emission control system.

▶ Refuel only using unleaded, sulphur-free spark-ignition engine fuel that conforms to European EN 228, or an equivalent specification.

Petrol can contain up to 25 %- of ethanol by volume.

▶ See the information label in the fuel filler flap for compatible fuels.

Further information about compatible fuels can be obtained at a qualified specialist workshop.

Throughout Europe, you can find compatibility markings on fuel pumps or pump nozzles suitable for your vehicle.

Never refuel with one of the following fuels:

- Diesel
- regular petrol with an octane number lower than 91 RON
- petrol with more than 3 % methanol by volume-, e. g. M15, M30
- petrol with metallic additives

If you have accidentally refuelled with the wrong fuel:

▶ Do not switch on the vehicle.

▶ Consult a qualified specialist workshop.

! NOTE Damage caused by the wrong fuel

Vehicles with a diesel engine:

Even small amounts of the wrong fuel could result in damage to the fuel system, the engine and the emission control system.

▶ Only refuel with sulphur-free diesel fuel. In countries without sulphur-free diesel fuel, only refuel with low-sulphur diesel fuel with a sulphur content below 50 ppm.

Never refuel with one of the following fuels:

- Petrol
- Marine diesel
- Heating oil
- Pure biodiesel or vegetable oil

- Petroleum or kerosene

If you have accidentally refuelled with the wrong fuel:

▶ Do not switch on the vehicle.

▶ Consult a qualified specialist workshop.

! **NOTE** Do not use diesel to refuel vehicles with a petrol engine

If you have accidentally refuelled with the wrong fuel:

- Do not switch on the vehicle. Otherwise fuel can enter the engine.

  Even small amounts of the wrong fuel could result in damage to the fuel system and the engine. The repair costs are high.

▶ Consult a qualified specialist workshop.

▶ Have the fuel tank and fuel lines drained completely.

! **NOTE** Do not refuel diesel-engined vehicles with petrol

If you have accidentally refuelled with the wrong fuel:

- Do not switch on the vehicle. Otherwise fuel can enter the engine.

  Even small amounts of the wrong fuel could result in damage to the fuel system and the engine. The repair costs are high.

▶ Consult a qualified specialist workshop.

▶ Have the fuel tank and fuel lines drained completely.

! **NOTE** Damage to the fuel system due to overfilling the fuel tank

▶ Only fill the fuel tank until the pump nozzle switches off.

If too much fuel has been added due, for example, to a faulty filling pump:

▶ Do not switch on the vehicle.

▶ Consult a qualified specialist workshop.

! **NOTE** Fuel may spray out when you remove the fuel pump nozzle

▶ Only fill the fuel tank until the pump nozzle switches off.

Requirements

- The vehicle is unlocked.
- **Plug-in hybrid with petrol engine:** the fuel tank was bled before refuelling (→ page 269).

Observe the notes on service fluids and fuel.

The recommended octane number for your vehicle can be found on the information label in the fuel filler flap.

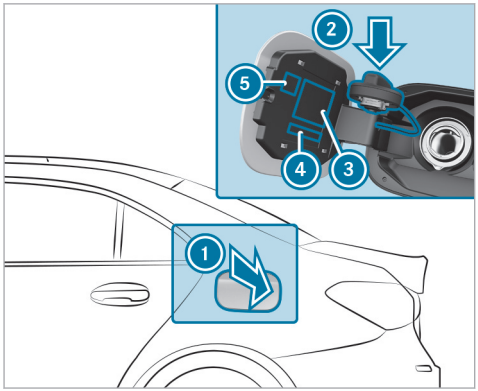

1. Fuel filler flap
2. Bracket for fuel cap
3. Tyre pressure table
4. Fuel type
5. QR code for rescue card

ⓘ **Plug-in hybrid with petrol engine:** the fuel filler flap opens automatically after bleeding the tank (→ page 269).

- Press on the back area of the fuel filler flap ①.
- Turn the fuel filler cap anti-clockwise and remove it.
- Insert fuel filler cap into bracket ② from above.
- Completely insert the pump nozzle into the tank filler neck, hook in place and refuel.
- Only fill the fuel tank until the pump nozzle switches off.

ⓘ **Vehicles with a diesel engine:** the tank filler neck is designed for refuelling at diesel filling pumps.
To prevent refuelling with the wrong fuel, your vehicle is equipped with a locking mechanism. This function may be deactivated in some countries owing to local circumstances. For more information, consult a Mercedes-Benz service centre.

ⓘ **Vehicles with a diesel engine:** do not run the tank dry.
If the fuel tank is completely empty, top up with at least 5 litres of diesel.

ⓘ **Vehicles with a diesel engine:** use a filler neck with a large diameter for vehicles with a diesel engine when topping up fuel from a fuel can. Otherwise, the filler neck cannot slide into the tank.
To prevent refuelling with the wrong fuel, your vehicle is equipped with a locking mechanism. This function may be deactivated in some countries owing to local circumstances. For more information, consult a Mercedes-Benz service centre.

- Replace the cap on the filler neck and turn clockwise until it engages audibly.
- Close fuel filler flap ①.

Refilling AdBlue®

! **NOTE** Engine damage due to AdBlue® being in the fuel

- AdBlue® must not be used to fill the fuel tank.

- ▶ Only use AdBlue® to fill the AdBlue® tank.
- ▶ Do not overfill the AdBlue® tank.

! NOTE Contamination of the vehicle interior due to AdBlue® leakage

- ▶ After topping up, carefully close the AdBlue® refill container.
- ▶ Avoid carrying AdBlue® refill containers permanently in the vehicle.

Requirements

- The vehicle is unlocked.

The following messages appear in order in the driver display when the AdBlue® tank requires refilling:

- Refill AdBlue See Owner's Manual. The AdBlue® level has fallen below the reserve range. Add at least 5 l of AdBlue®.
- Top up AdBlue Emergency op. in XXX km See Owner's Manual. The low AdBlue® level will lead to limited performance after the remaining distance displayed has been driven. Add at least 5 l of AdBlue®.
- Top up AdBlue XX,X l Emerg. op.: max. XXX km/h Start not poss. in XXX km. The low AdBlue® level will lead to limited performance from the speed displayed. After the remaining distance displayed has been covered, it will no longer be possible to start the vehicle. Top up at least the displayed quantity of AdBlue®.
- Top up XX,X l AdBlue Switch vehicle on, wait 60 sec. or engine start not possThe AdBlue® tank is empty. You can no longer start the vehicle. Top up at least the displayed quantity of AdBlue®. Switch on the vehicle and wait approx. 60 seconds. Start the vehicle.

You can see the AdBlue® range and level in the driver display Service.

ⓘ The AdBlue® range shown depends strongly on the driving style and operating conditions. The actual range can therefore deviate from the calculated range.

Opening the AdBlue® filler cap

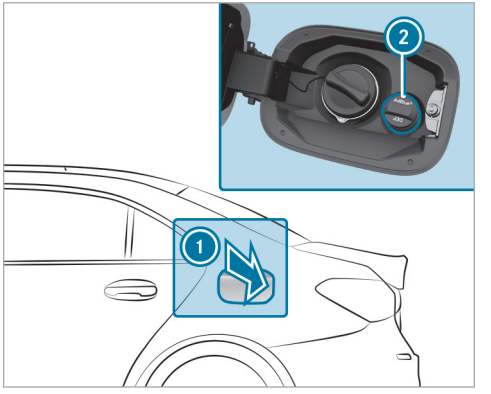

- ▶ Press on the centre of the back area of fuel filler flap ①.
- ▶ Turn AdBlue® filler cap ② anti-clockwise and remove it.

ⓘ You can also place the AdBlue® filler cap in the filler cap holder in the hinge arm of the fuel filler flap.

Refilling AdBlue®

Mercedes-Benz recommends that you top up AdBlue® at a pump. If no AdBlue® pump is available, you can also top up AdBlue® with a canister.

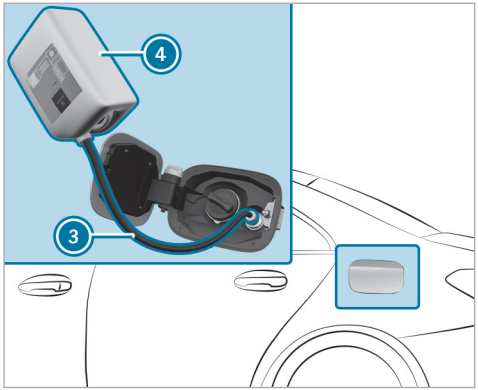

- Screw on the fastener of AdBlue® refill canister 4.
- Screw disposable hose 3 onto the opening of AdBlue® refill canister 4 until hand-tight.
- Screw disposable hose 3 onto the filler neck of the vehicle until hand-tight.
- Lift up and tip AdBlue® refill canister 4. The filling process stops when the AdBlue® container is completely full.

  AdBlue® refill canister 4 can be removed when it has been only partially emptied.
- Unscrew and close disposable hose 3 and AdBlue® refill canister 4 in reverse order.
- Replace the AdBlue filler cap® 2 and turn it clockwise until it audibly engages.
- Close fuel filler flap 1.
- Switch on the vehicle for at least 60 seconds.

ⓘ If it was no longer possible to start the vehicle due to the empty AdBlue® tank, it takes up to 60 seconds for topping up to be detected.

- Start the vehicle.

ⓘ Avoid storing AdBlue® refill containers permanently in the vehicle.

Topping up the windscreen washer system

⚠ **DANGER** Risk of fatal injuries when carrying out maintenance work during the charging process

During the charging process, the high-voltage on-board electrical system is under high voltage.

- Do not perform any maintenance work during the charging process.

⚠ **WARNING** Risk of burns when opening the bonnet

If you open the bonnet in the event of an overheated engine or fire in the engine compartment, the following situations may occur:

- You may come into contact with hot gases.
- You may come into contact with other escaping hot operating fluids.

- Before opening the bonnet, allow the engine to cool down.

- In the event of a fire in the engine compartment, keep the bonnet closed and call the fire service.

WARNING Risk of injury due to moving parts

Components in the engine compartment may continue to run or start unexpectedly even when the drive system is switched off.

Observe the following if you must open the bonnet:

- Switch off the vehicle.
- Never touch the danger zones surrounding moving components, e.g. the rotation area of the fan.
- Remove jewellery and watches.
- Keep items of clothing and hair away from moving parts.

WARNING Risk of burns from hot component parts in the engine compartment

Certain component parts in the engine compartment can be very hot, e.g. the engine, the cooler and parts of the exhaust system.

- Allow the engine to cool down and only touch component parts described in the following.

WARNING - Risk of fire and injury due to windscreen washer concentrate

Windscreen washer concentrate is highly flammable. It could ignite if it comes into contact with hot engine component parts or the exhaust system.

- Make sure that no windscreen washer concentrate spills out next to the filler opening.

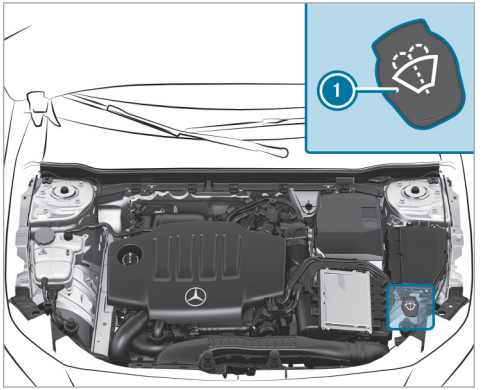

- Remove cap 1 by the tab.
- Top up the washer fluid.

Replacing the windscreen wiper blades

⚠ **WARNING** Risk of becoming trapped if the windscreen wipers are switched on while wiper blades are being replaced

If the windscreen wipers begin to move while you are changing the wiper blades, you can be trapped by the wiper arm.

▶ Always switch off the windscreen wipers and vehicle before changing the wiper blades.

Moving the wiper arms into the replacement position

▶ Switch the vehicle on and then off again immediately.

▶ Within around 15 seconds, press and hold the button on the combination switch for approximately three seconds (→ page 211). The wiper arms will move into the replacement position.

ⓘ Check the condition of the wiper blades regularly and replace them in the event of visible damage or ongoing smearing.

▶ Observe the information about the service indicator.

Service indicator

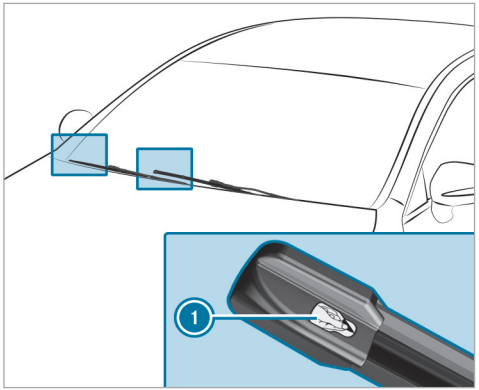

F177 0066 02

▶ Remove protective film ① from the service indicators on the tips of the newly fitted wiper blades.

When the colour of the service indicators changes from black to yellow, replace the wiper blades.

ⓘ The time until the colour changes varies depending on the usage conditions.

Checking the engine oil level using the driver's display

Requirements

- The engine has been warmed up.
- The vehicle is parked on a level surface.
- The engine is running at idle speed.
- The bonnet is closed.

Determining the engine oil level can take up to 30 minutes with a normal driving style and even longer with an active driving style.

Driver's display:

→ Service

The engine oil level is shown.

One of the following messages will appear on the driver's display:

- Engine oil level Measuring now...: the engine oil level cannot be determined yet.

▶ Repeat the request after a maximum of 30 minutes' driving.

- Engine oil level OK and the bar display for indicating the engine oil level on the driver's display is green and is between "min" and "max": the engine oil level is correct.
- Engine oil level Top up 1,0 l and the bar display for indicating the engine oil level on the driver's display is yellow and is below "min":

▶ Add 1 l of engine oil.

- Engine oil level Reduce and the bar display for indicating the engine oil level on the driver's display is yellow and is above "max":

▶ Drain off any excess engine oil that has been added. To do so, consult a qualified specialist workshop.

- For engine oil level, switch on vehicle

▶ Switch on the vehicle to check the engine oil level.

- Engine oil level System inoperative: The oil level sensor is defective or not connected.

▶ Consult a qualified specialist workshop.

- Engine oil level System currently inoperative

▶ Close the bonnet.

Information on washing the vehicle in a car wash

⚠ **WARNING** Risk of an accident due to reduced braking power after washing the vehicle

Braking efficiency is reduced after washing the vehicle.

▶ After the vehicle has been washed, brake carefully while paying attention to the traffic conditions until braking power has been fully restored.

! **NOTE** Damage from automatic braking

If one of the following functions is activated, the vehicle will brake automatically in certain situations:

- Active Brake Assist
- Active Distance Assist DISTRONIC
- HOLD function
- Active Parking Assist

To avoid damaging the vehicle, deactivate these systems e.g. during towing or in the car wash.

! **NOTE** Damage due to unsuitable car wash

▶ Before driving into a car wash make sure that the car wash is suitable for the vehicle dimensions.

▶ Ensure there is sufficient ground clearance between the underbody and the guide rails of the car wash.

▶ Ensure that the clearance width of the car wash, in particular the width of the guide rails, is sufficient.

To avoid damage to your vehicle when using a car wash, ensure the following beforehand:

- Active Distance Assist DISTRONIC is deactivated.

- the HOLD function is switched off.
- the 360° Camera or the reversing camera is switched off.
- the side windows and sliding sunroof are completely closed.
- the blower for the ventilation and heating is switched off.
- the windscreen wiper switch is in position [0].
- the key is at a minimum distance of 3 m away from the vehicle. Otherwise the boot lid could open unintentionally.
- for car washes with a conveyor system:
  - neutral [N] is engaged.
  - If you would like to leave the vehicle while it is being washed, make sure the key is located in the vehicle. The park position [P] is otherwise automatically engaged.

ⓘ If, after the car wash, you remove the wax from the windscreen and wiper rubbers, this will prevent smearing and reduce wiper noise.

Preparing for a holiday

Notes on adjusting the lights when driving abroad

It is not necessary to adjust the headlamps. The legal requirements are also met in countries in which traffic drives on the other side of the road.

Notes on regularly inspecting wheels and tyres

⚠ **WARNING** Risk of injury due to damaged tyres

Damaged tyres can cause tyre pressure loss.

▶ Check the tyres regularly for signs of damage and replace any damaged tyres immediately.

⚠ **WARNING** Risk of aquaplaning due to insufficient tyre tread

Insufficient tyre tread will result in reduced tyre grip.

The risk of aquaplaning is increased on wet roads, especially when the speed of the vehicle is not adapted to suit the conditions.

▶ Thus, you should regularly check the tread depth and the condition of the tread across the entire width of all tyres.

Minimum tread depth for:

- Summer tyres: 3 mm
- M+S tyres: 4 mm

▶ For safety reasons, replace the tyres before the legally-prescribed limit for the minimum tread depth is reached.

Carry out the following checks on all wheels regularly, at least once a month or as required, for example, prior to a long journey or driving off-road:

- Check the tyre pressure (→ page 599).
- Visually inspect wheels and tyres for damage.
- Check the valve caps.
- Visual check of the tyre tread depth and the tyre contact surface across the entire width.

  The minimum tread depth for summer tyres is 3 mm and for winter tyres 4 mm.

Removing the safety vest

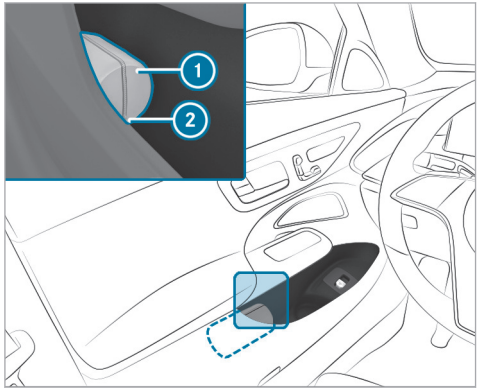

There is a high-visibility waistcoat compartment on the door shelves of all doors for storing a high-visibility waistcoat.

- ▶ To remove: pull out safety vest bag ① by loop ②.
- ▶ Open the safety vest bag ① and pull out the safety vest.
- ▶ Replace: Fold up the safety vest, roll it up and place it in the safety vest ①.
- ▶ Slide the safety vest bag ① along the lower edge of the armrest into the safety vest compartment. Ensure that the loop ② hangs out so that it is easy to reach.

ⓘ Remove the packaging film before sliding it into the safety vest compartment for a new safety vest. Otherwise, it may cause unintentional slipping or make removing difficult. Observe the legal requirements in the individual countries.

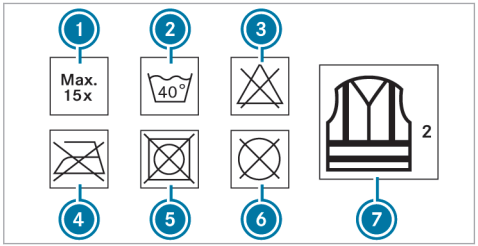

① Maximum number of washes
② Maximum wash temperature
③ Do not bleach
④ Do not iron
⑤ Do not tumble dry
⑥ Do not dry clean
⑦ Class 2 safety vest

The requirements defined by the legal standard are only fulfilled if the safety vest is the correct size and is fully closed.

Replace the safety vest in the following cases:

- The reflective strips are damaged or dirty
- The maximum permissible number of washes is exceeded
- The fluorescence property decreases, e.g. due to permanent exposure to sunlight.

Dispose of the safety vest in an environmentally friendly way:

- Please contact your local waste disposal company.

Removing the warning triangle

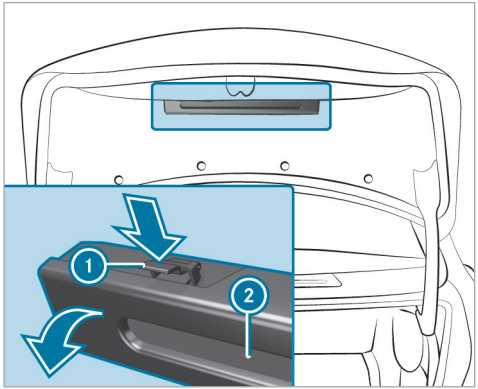

- Push both sides of warning triangle holder (1) in the direction of the arrow and open it.
- Remove warning triangle (2).

First-aid kit (soft-sided) overview

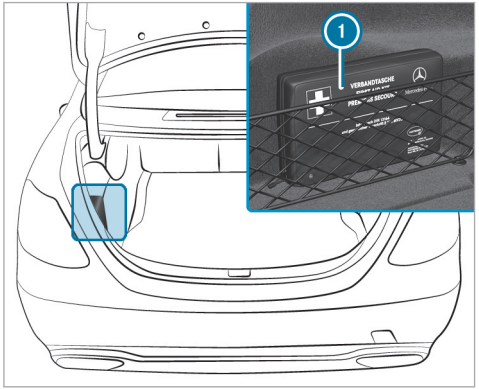

First-aid kit (soft-sided) (1) is located in the stowage net on the left-hand side of the boot.

Depending on the vehicle version, the first-aid kit (soft-sided) (1) may be located in other positions in the boot.

Map data update overview

As the content of a digital road map has a short life, outdated data may have a negative effect on all navigation functions. For the best MBUX navigation experience, you should install all of the map updates offered by Mercedes-Benz.

The following options are available for the update of map data:

- Online map update
- Updates from the Mercedes me Portal
- Update at a Mercedes-Benz service centre

  Additional costs can be incurred in this process.

Online map update

Requirements:

- Mercedes me connect is available.
- You have a Mercedes me user account.
- The Online Map Update service is available for your region.
- The service has been activated.

ⓘ The Online Map Update service is only available in certain countries.

Installation takes place in the background as an automatic map update.

The MBUX multimedia system installs all of the available map updates for the European regions in which the vehicle is located or is moved.

The online map update is activated at the latest after the next time the vehicle is switched on.

Updates from the Mercedes me Portal

The map data for several regions can also be updated manually. Log in with your Mercedes me user account at: https://www.mercedes-benz.de/

Follow the menu path My Mercedes Me account > My vehicles > Selection of car > Online Map Update. Select the regions to be downloaded to a storage medium.

After the map data has been copied, connect the storage medium with your vehicle. Select the notification with information about a new version of the map data and start the installation. After the MBUX multimedia system has been restarted, the updated map data is used.

Entering a POI or address

Requirements

- For the online search:
  - There is an Internet connection.
  - Mercedes me connect is available.
  - You have set up a user account in the Mercedes me Portal.
  - The vehicle is connected with the user account and you have accepted the terms of use.
  - Further information can be found at: https://www.mercedes.me
  - The service is available and has been activated.

ⓘ If Online Search is not available, the search is performed using the data of the digital map.

Multimedia system:

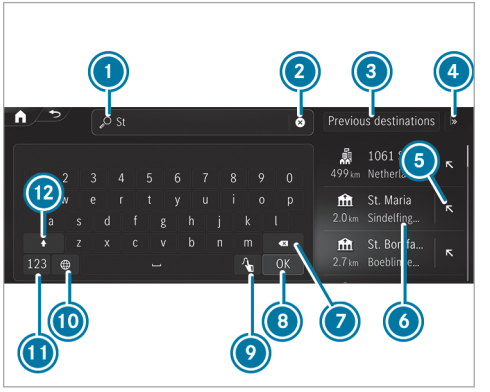

Example: entering a POI or address

1. Input line with current entry
2. Deletes an entry
3. Selects previous destinations
4. Displays and selects additional destination searches

⑤ Adopts the search result in the input line and continues the search
⑥ Search result
⑦ Deletes the last character entered
⑧ Hides the keypad
⑨ Switches to handwriting recognition (→ page 430)
⑩ Sets the written language
⑪ Switches to digits and special characters
⑫ Switches to upper-case or lower-case letters

If available, selecting the [ ] symbol starts the MBUX voice assistant.

▶ Enter a destination. The entries can be made in any order.
The search results are displayed in a list.

ⓘ Online search results for POIs may contain additional information, for example opening times and ratings. The information is provided by an online map service.
This online function is not available in all countries.

The following entries can be made, for example in ①:

- Town, street, house number or street, town
- Postcode
- POI name or POI category, e.g. Restaurants
- Town, POI name
- Contact name
- Geo-coordinates (→ page 456)
- Three-word addresses from what3words (→ page 456)
  Entering three-word addresses is possible in the online search .

▶ Hide the keyboard with [OK].
▶ Select the destination in the list.
The following menu shows the selected destination with the address information and a corresponding map section.
The menu enables the route to be calculated.

Searching for radio stations using station names or frequency entry

Multimedia system:

→ [⌂] » [ ] Radio

▶ Select [🔍].
▶ Enter a station name or frequency.
▶ Select a station.

Luggage and loading

Attaching a roof luggage rack

⚠ **WARNING** Risk of accident due to exceeding the maximum roof load

The vehicle centre of gravity and the usual driving characteristics as well as the steering and braking characteristics alter.

If you exceed the maximum roof load, the driving characteristics, as well as steering and braking, will be greatly impaired.

▶ Never exceed the maximum roof load and adjust your driving style.

You will find information on the maximum roof load in the "Technical data" section in the printed Owner's Manual.

NOTE Vehicle damage due to failure to observe the maximum permissible clearance height

If the vehicle height exceeds the maximum permissible clearance height, the roof and other vehicle parts may be damaged.

- Please observe the indicated maximum clearance height.
- If the vehicle exceeds the permissible clearance height, do not drive in.
- Take the modified vehicle height in the case of roof superstructures or other carrier systems into account.

NOTE Vehicle damage from non-approved roof luggage racks

The vehicle could be damaged by roof luggage racks that have not been tested and approved for Mercedes-Benz.

- Use only roof luggage racks tested and approved for Mercedes-Benz.
- Depending on the vehicle equipment, ensure that the sliding sunroof can be fully raised when the roof luggage rack is fitted.
- Depending on the vehicle equipment, ensure that the boot lid can be fully opened when the roof luggage rack is fitted.
- Position the load on the roof luggage rack in such a way that the vehicle will not sustain damage even when it is in motion.

NOTE Damage to the panorama sliding sunroof due to non-approved roof luggage racks

The panorama sliding sunroof may be damaged by the roof luggage rack if you attempt to open it when using a roof luggage rack not tested and approved for Mercedes-Benz.

- When a roof luggage rack is fitted, open the panorama sliding sunroof only if this has been tested and approved for Mercedes-Benz.

The panorama sliding sunroof may be raised to allow ventilation of the vehicle interior.

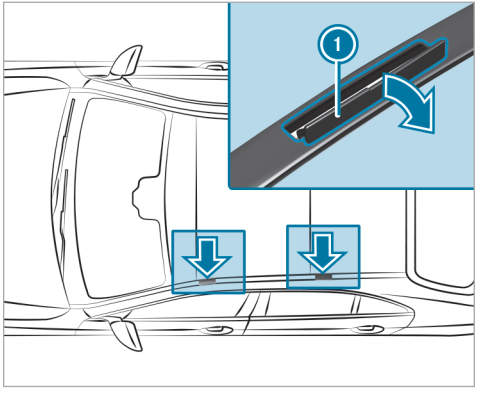

NOTE Damage to the covers

The covers may be damaged and scratched when being opened.

▶ Do not use metallic or hard objects.

▶ Fold covers (1) carefully upwards in the direction of the arrow.

▶ Secure the roof luggage rack to the fastening points beneath covers (1).

▶ Comply with the installation instructions of the roof luggage rack manufacturer.

▶ Secure the load on the roof luggage rack.

Folding the rear seat backrest forwards

WARNING Risk of accident if the rear bench seat, rear seat and seat backrest are not engaged

The rear bench seat, rear seat and seat backrest may fold forwards, even while the vehicle is in motion.

- As a result, the vehicle occupant will be pressed into the seat belt with increased force. The seat belt will not be able to protect as intended and could cause additional injury.
- Objects or loads in the boot or load compartment cannot be restrained by the seat backrest.

▶ Make sure that the rear bench seat, the rear seat and the seat backrest are engaged before every trip.

If the seat backrests are not engaged and locked in place, the lock verification indicator will be red.

Requirements

- To fold the centre seat backrest forwards: the centre seat backrest has been unlocked.

You can fold the centre and outer seat backrests forwards separately.

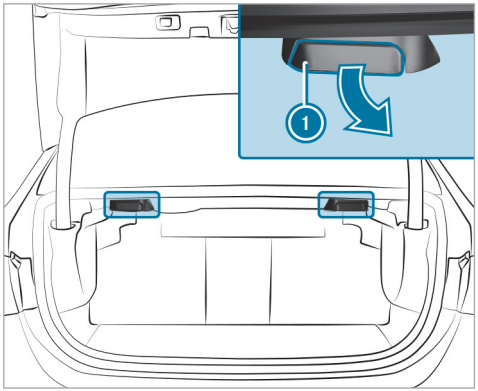

Vehicles with a memory function: if necessary, when the seat backrest in the rear is folded forward, the front seat will move forwards slightly to avoid a collision.

▶ If necessary, fully insert the head restraints in the rear seat backrest.

The release handles are located beneath the rear shelf.

▶ **To fold the left and right seat backrests forward:** pull right or left release handle ① and fold the corresponding seat backrest forwards.

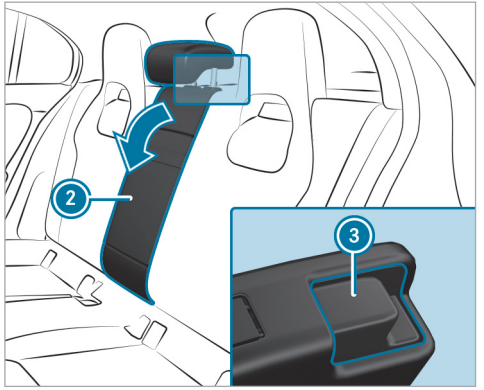

▶ **To fold the centre seat backrest forwards:** pull release catch ③ of seat backrest ② forwards.

▶ Fold seat backrest ② forwards.

▶ If necessary, reset the driver's or front passenger seat.

Folding back the rear seat backrest

⚠ WARNING Risk of becoming trapped when adjusting the seats

When you adjust a seat, you may trap yourself or a vehicle occupant.

▶ When adjusting a seat, make sure that no one has any body parts in the sweep of the seat.

⚠ WARNING Risk of accident if the rear bench seat, rear seat and seat backrest are not engaged

The rear bench seat, rear seat and seat backrest may fold forwards, even while the vehicle is in motion.

- As a result, the vehicle occupant will be pressed into the seat belt with increased force. The seat belt will not be able to protect as intended and could cause additional injury.
- Objects or loads in the boot or load compartment cannot be restrained by the seat backrest.

▶ Make sure that the rear bench seat, the rear seat and the seat backrest are engaged before every trip.

If the seat backrests are not engaged and locked in place, the red lock verification indicator will be visible.

! NOTE Damage caused by trapping the seat belt when folding back the seat backrest

The seat belt could become trapped and thus be damaged when the seat backrest is folded back.

▶ Make sure that the seat belt is not trapped when folding back the seat backrest.

▶ Move the driver's or front passenger seat forwards, if necessary.

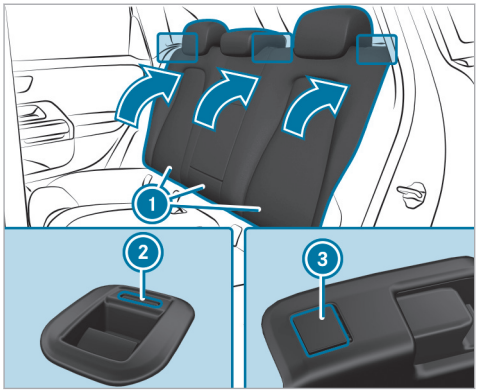

▶ Fold corresponding seat backrest ① back until it engages.
Left and right seat backrests: if the seat backrest is not engaged and locked in place, red lock verification indicator ② will be visible.

Centre seat backrest: if the seat backrest is not engaged and locked in place, red lock verification indicator ③ will be visible.

Opening and closing the stowage space under the boot floor

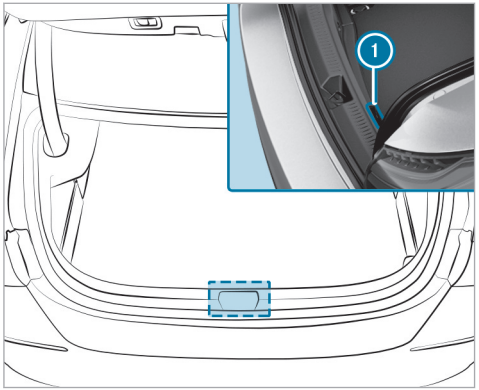

▶ **To open:** lift the boot floor at recess ① and swing it upwards.

▶ **To close:** fold the boot floor downwards.

Folding the ball neck out and in

⚠ **WARNING** Risk of accident due to the ball neck not being engaged

If the ball neck is not engaged, the trailer may come loose.

▶ Always engage the ball neck as described.

⚠ **WARNING** Risk of injury from ball neck swinging outwards

The ball neck may swing outwards when unlocking or when it has not been properly engaged.

There is a risk of injury within the ball neck's range of movement!

▶ Unlock the ball neck only when its range of movement is unobstructed.

▶ Always be sure the ball neck is engaged when folding inwards.

NOTE Increased risk of damage to property due to folded-out ball neck

- When the trailer is not coupled or the bicycle rack is attached, fold in the ball neck or, in the case of a fully electric trailer hitch, retract the ball neck.

NOTE Damage to the vehicle due to incorrect use of the trailer hitch

If a trailer hitch is used to recover the vehicle, the vehicle or the trailer hitch itself may be damaged in the process.

- Use the trailer hitch only for pulling a trailer or attaching approved carrier systems (e.g. a bicycle rack).
  Exception: Since vehicles with a trailer hitch do not have a fixture for a towing eye at the rear, towing or tow-starting is permitted.
- When towing or tow-starting with the trailer hitch, observe the information in the section "Fitting and removing the towing eye."

Folding the ball neck out

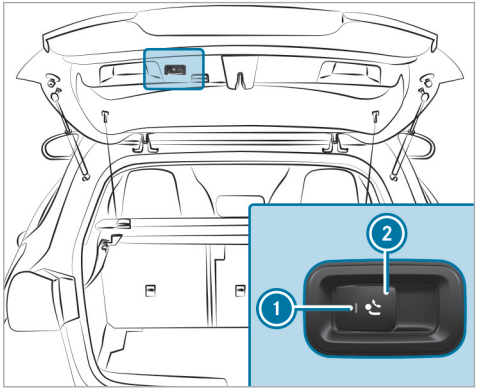

- Secure the vehicle against rolling away.
- Keep the swivel range clear.
- Remove the trailer cable or adapter plug.
- Pull switch (2) until the ball neck unlocks. The ball neck will fold out from under the rear bumper.
  Indicator lamp (1) will flash.

F177 0066 02

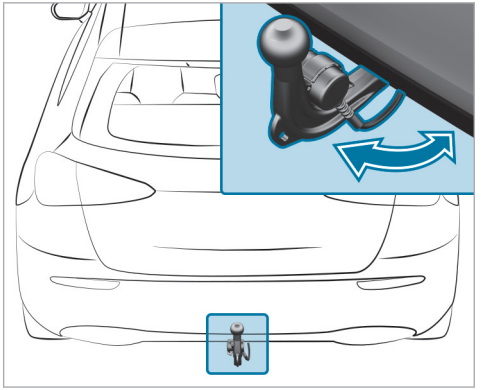

- Pull the ball neck in the direction of the arrow until it engages audibly in a vertical position. Indicator lamp (1) on the ball neck release switch will go out.
  If the ball neck is not securely locked in place, a message reading Trailer coupling Check lock will appear on the driver's display.
- Remove the cover cap from the ball head and store it in a safe place.

Make sure that the ball on the ball neck is clean. Check that it is either greased or dry (grease-free), depending on the instructions for the trailer.

Folding the ball neck in

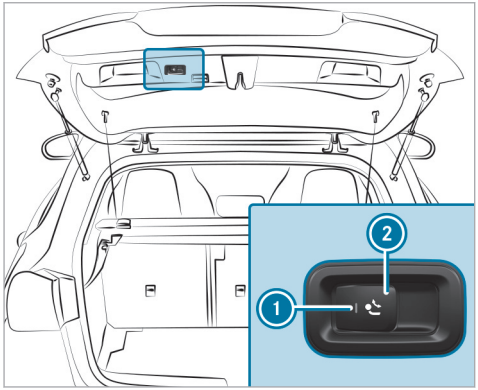

▶ Pull switch ② until the ball neck unlocks. The ball neck will fold up under the rear bumper.

Indicator lamp ① will flash.

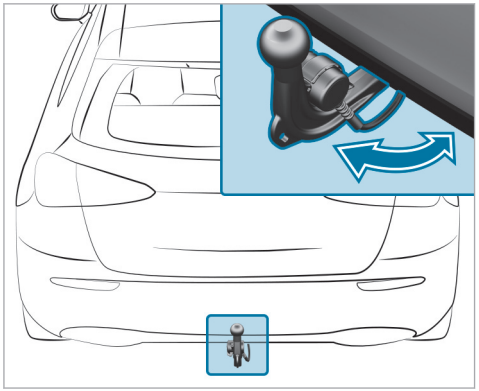

▶ Push the ball neck in the direction of the arrow until it engages audibly behind the bumper.
Indicator lamp ① will go out and the message on the driver's display will disappear.

Observe the information about indicators on the driver's display:

- Indicator and warning lamps (→ page 838)
- Display messages (→ page 755)

Overview of tie-down eyes

Observe the notes on loading the vehicle (→ page 183).

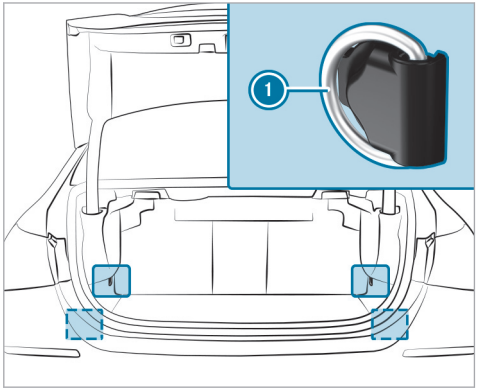

① Tie-down eyes (vehicles with through-loading feature in the rear bench seat)

Overview of the front storage compartments

WARNING Risk of injury due to objects being stowed incorrectly

If objects in the vehicle interior are stowed incorrectly, they can slide or be thrown around and hit vehicle occupants. In addition, cup holders, open stowage spaces and mobile phone receptacles cannot always retain all objects within.

There is a risk of injury, particularly in the event of sudden braking or a sudden change in direction.

- Always stow objects so that they cannot be thrown around in such situations.
- Always make sure that objects do not protrude from stowage spaces, luggage nets or stowage nets.
- Close the lockable stowage spaces before starting a journey.
- Always stow and secure heavy, hard, pointed, sharp-edged, fragile or bulky objects in the boot/load compartment.

Observe the notes on loading the vehicle.

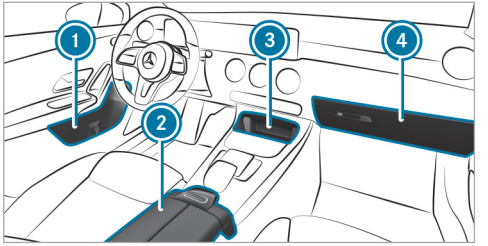

1. Stowage spaces in the doors
2. Storage compartment in the armrest with a multimedia and USB connection
3. Storage compartment in the front centre console with a USB port
4. Glove compartment

Ice and snow

Notes on regularly inspecting wheels and tyres

WARNING Risk of injury due to damaged tyres

Damaged tyres can cause tyre pressure loss.

- Check the tyres regularly for signs of damage and replace any damaged tyres immediately.

WARNING Risk of aquaplaning due to insufficient tyre tread

Insufficient tyre tread will result in reduced tyre grip.

The risk of aquaplaning is increased on wet roads, especially when the speed of the vehicle is not adapted to suit the conditions.

- Thus, you should regularly check the tread depth and the condition of the tread across the entire width of all tyres.

Minimum tread depth for:

- Summer tyres: 3 mm
- M+S tyres: 4 mm

▶ For safety reasons, replace the tyres before the legally-prescribed limit for the minimum tread depth is reached.

Carry out the following checks on all wheels regularly, at least once a month or as required, for example, prior to a long journey or driving off-road:

- Check the tyre pressure (→ page 599).
- Visually inspect wheels and tyres for damage.
- Check the valve caps.
- Visual check of the tyre tread depth and the tyre contact surface across the entire width.

  The minimum tread depth for summer tyres is 3 mm and for winter tyres 4 mm.

Setting the speed limit for winter tyres

Multimedia system:

→ [⌂] ▸▸ Settings ▸▸ Vehicle ▸▸ Driving ▸▸ Winter tyre limit

▶ Activate or deactivate Winter tyre limit.

Setting a speed

▶ Select Winter tyre limit.

▶ Select a speed.

Notes on snow chains

⚠ **WARNING** Risk of accident due to incorrectly fitted snow chains

If you have fitted snow chains to the rear wheels, they may drag against the vehicle body or chassis components.

▶ Never fit snow chains on the rear wheels.

▶ Only fit snow chains on the front wheels in pairs.

! **NOTE** Damage to vehicle body or suspension components caused by fitted snow chains

On 4MATIC vehicles, if you fit snow chains on the rear wheels, you can damage vehicle body or suspension components.

▶ On 4MATIC vehicles, only fit snow chains on the front wheels.

Observe the following notes when using snow chains:

- Snow chains are only permissible for certain wheel/tyre combinations. You can obtain information about this from a Mercedes-Benz Service Centre.
- For safety reasons, only use snow chains that have been specifically approved for your vehicle by Mercedes-Benz, or snow chains with the same quality standard.
- If snow chains are fitted, the maximum permissible speed is 50 km/h.

- **Vehicles with Active Parking Assist:** do not use Active Parking Assist when snow chains are fitted.

ⓘ You can permanently limit the maximum speed for driving with winter tyres (→ page 318).

ⓘ You can deactivate ESP® to pull away (→ page 309). This allows the wheels to spin, achieving an increased driving force.

Notes on windscreen washer fluid

Observe the notes on operating fluids (→ page 735).

⚠ WARNING - Risk of fire and injury due to windscreen washer concentrate

Windscreen washer concentrate is highly flammable. It could ignite if it comes into contact with hot engine component parts or the exhaust system.

▶ Make sure that no windscreen washer concentrate spills out next to the filler opening.

! NOTE Damage to the exterior lighting due to unsuitable windscreen washer fluid

Unsuitable windscreen washer fluids may damage the plastic surface of the exterior lighting.

▶ Only use windscreen washer fluids which are also suitable for use on plastic surfaces, e.g. MB SummerFit or MB WinterFit.

! NOTE Blocked spray nozzles caused by mixing windscreen washer fluids

▶ Do not mix MB SummerFit and MB WinterFit with other windscreen washer fluids.

Do not use distilled or de-ionised water. Otherwise, the fill level sensor may be triggered erroneously.

Recommended windscreen washer fluid:

- above freezing point: e.g. MB SummerFit
- below freezing point: e.g. MB WinterFit

For the correct mixing ratio, refer to the information on the antifreeze container.

Mix washer fluid with windscreen washer fluid all year round.

Topping up the windscreen washer system

⚠ DANGER Risk of fatal injuries when carrying out maintenance work during the charging process

During the charging process, the high-voltage on-board electrical system is under high voltage.

▶ Do not perform any maintenance work during the charging process.

WARNING Risk of burns when opening the bonnet

If you open the bonnet in the event of an overheated engine or fire in the engine compartment, the following situations may occur:

- You may come into contact with hot gases.
- You may come into contact with other escaping hot operating fluids.

▶ Before opening the bonnet, allow the engine to cool down.

▶ In the event of a fire in the engine compartment, keep the bonnet closed and call the fire service.

WARNING Risk of injury due to moving parts

Components in the engine compartment may continue to run or start unexpectedly even when the drive system is switched off.

Observe the following if you must open the bonnet:

▶ Switch off the vehicle.

▶ Never touch the danger zones surrounding moving components, e.g. the rotation area of the fan.

▶ Remove jewellery and watches.

▶ Keep items of clothing and hair away from moving parts.

WARNING Risk of burns from hot component parts in the engine compartment

Certain component parts in the engine compartment can be very hot, e.g. the engine, the cooler and parts of the exhaust system.

▶ Allow the engine to cool down and only touch component parts described in the following.

WARNING - Risk of fire and injury due to windscreen washer concentrate

Windscreen washer concentrate is highly flammable. It could ignite if it comes into contact with hot engine component parts or the exhaust system.

▶ Make sure that no windscreen washer concentrate spills out next to the filler opening.

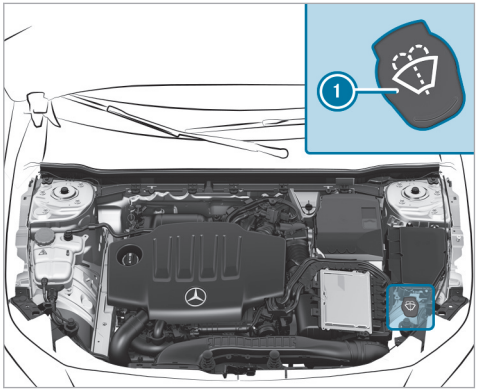

▶ Remove cap 1 by the tab.

▶ Top up the washer fluid.

Replacing the windscreen wiper blades

WARNING Risk of becoming trapped if the windscreen wipers are switched on while wiper blades are being replaced

If the windscreen wipers begin to move while you are changing the wiper blades, you can be trapped by the wiper arm.

- Always switch off the windscreen wipers and vehicle before changing the wiper blades.

Moving the wiper arms into the replacement position

- Switch the vehicle on and then off again immediately.
- Within around 15 seconds, press and hold the button on the combination switch for approximately three seconds (→ page 211). The wiper arms will move into the replacement position.

ⓘ Check the condition of the wiper blades regularly and replace them in the event of visible damage or ongoing smearing.

- Observe the information about the service indicator.

Service indicator

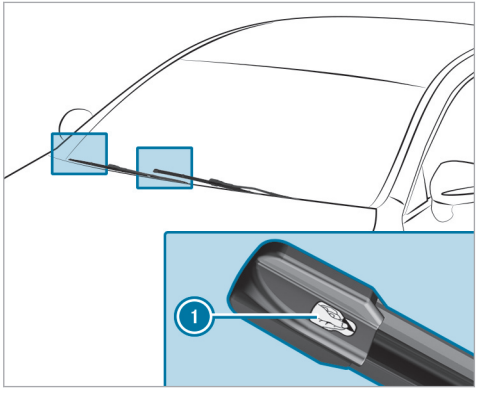

- Remove protective film (1) from the service indicators on the tips of the newly fitted wiper blades.

When the colour of the service indicators changes from black to yellow, replace the wiper blades.

F177 0066 02

ⓘ The time until the colour changes varies depending on the usage conditions.

Switching the stationary heater/ventilation on/off via the operating unit

DANGER Risk of fatal injury due to poisonous exhaust gases

If the tailpipe is blocked or sufficient ventilation is not possible, poisonous exhaust gases such as carbon monoxide may enter the vehicle. This is the case in enclosed spaces or if the vehicle gets stuck in snow, for example.

- Always switch the stationary heater off in enclosed spaces without an air extraction system, e.g. in garages.
- Keep the tailpipe and the area around the vehicle free from snow when the engine or the stationary heater is running.
- Open a window on the side of the vehicle facing away from the wind to ensure an adequate supply of fresh air.

WARNING Risk of fire due to hot stationary heater components and exhaust gases

Flammable materials such as leaves, grass or twigs may ignite.

▶ When the stationary heater is switched on, make sure that:
- hot vehicle parts do not come into contact with flammable materials.
- the exhaust gas can flow out of the stationary heater exhaust pipe unhindered.
- the exhaust gas does not come into contact with flammable materials.

NOTE Battery discharge caused by stationary heater or stationary ventilation operation

Operating the stationary heater or stationary ventilation drains the battery.

▶ After heating or ventilating the vehicle twice, drive for a longer period of time.

Requirements
- The fuel tank is at least ¼ full.

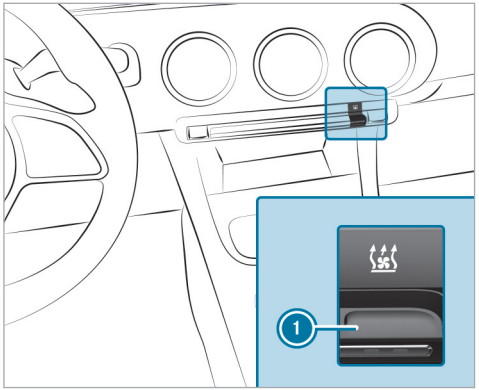

▶ Set the desired temperature using the ▼▲ button.

▶ Press button 1.
The red or blue indicator lamp on button 1 will light up or go out.

The colours of the indicator lamp have the following meanings:
- **Blue:** stationary ventilation is switched on.
- **Red:** the stationary heater is switched on.
- **Yellow:** the departure time is preselected.

The stationary heater/ventilation will switch off automatically after 50 minutes.

Help in the event of a breakdown

Activating/deactivating the hazard warning lights

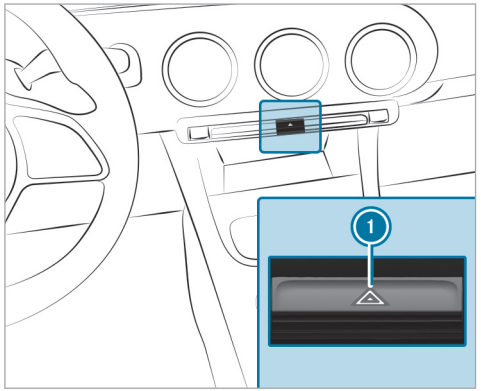

▶ Press button 1.

The hazard warning lights will switch on automatically if:

- the airbag has been deployed.
- the vehicle is braked heavily from a speed of more than 70 km/h to a standstill.

When you pull away again, the hazard warning light system will switch off automatically at approximately 10 km/h. You can also switch off the hazard warning light system using button 1.

Removing the fire extinguisher

⚠ **WARNING** Risk of accident due to an incorrectly secured fire extinguisher in the driver's footwell

A fire extinguisher may impede pedal travel or block a depressed pedal.

This jeopardises the operating and road safety of the vehicle.

The fire extinguisher can be flung around and injure the driver or other vehicle occupants.

▶ Always store and secure the fire extinguisher in the bracket.

▶ Do not remove the fire extinguisher while driving.

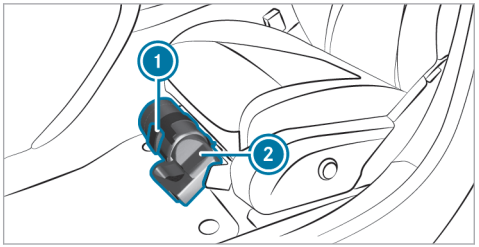

▶ **Left-hand drive vehicle:** pull tab 1 upwards.

▶ **Right-hand drive vehicle:** pull tab 1 downwards.

▶ Remove fire extinguisher 2.

Removing the safety vest

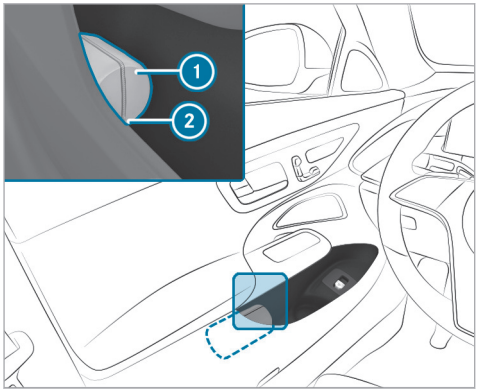

There is a high-visibility waistcoat compartment on the door shelves of all doors for storing a high-visibility waistcoat.

- To remove: pull out safety vest bag ① by loop ②.
- Open the safety vest bag ① and pull out the safety vest.
- Replace: Fold up the safety vest, roll it up and place it in the safety vest ①.
- Slide the safety vest bag ① along the lower edge of the armrest into the safety vest compartment. Ensure that the loop ② hangs out so that it is easy to reach.

ⓘ Remove the packaging film before sliding it into the safety vest compartment for a new safety vest. Otherwise, it may cause unintentional slipping or make removing difficult. Observe the legal requirements in the individual countries.

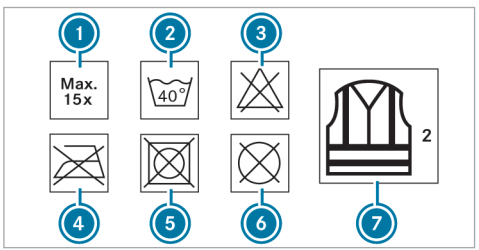

① Maximum number of washes
② Maximum wash temperature
③ Do not bleach
④ Do not iron
⑤ Do not tumble dry
⑥ Do not dry clean
⑦ Class 2 safety vest

F177 0066 02

The requirements defined by the legal standard are only fulfilled if the safety vest is the correct size and is fully closed.

Replace the safety vest in the following cases:

- The reflective strips are damaged or dirty
- The maximum permissible number of washes is exceeded
- The fluorescence property decreases, e.g. due to permanent exposure to sunlight.

Dispose of the safety vest in an environmentally friendly way:

- Please contact your local waste disposal company.

Removing the warning triangle

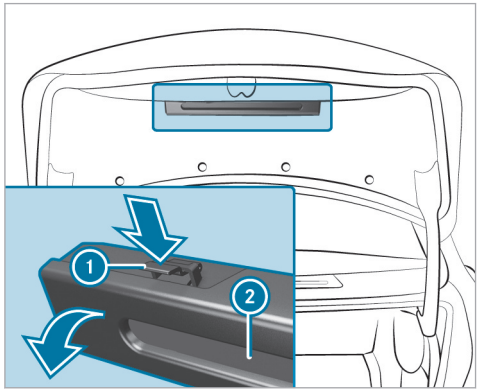

- Push both sides of warning triangle holder 1 in the direction of the arrow and open it.
- Remove warning triangle 2.

First-aid kit (soft-sided) overview

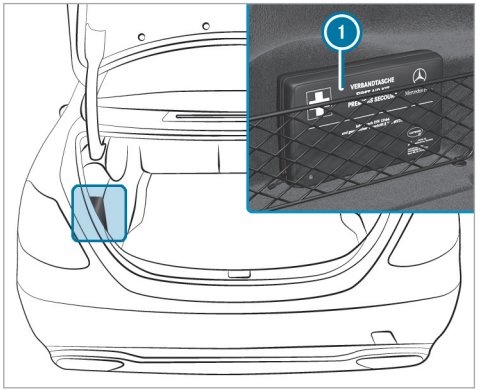

First-aid kit (soft-sided) 1 is located in the stowage net on the left-hand side of the boot.

Depending on the vehicle version, the first-aid kit (soft-sided) 1 may be located in other positions in the boot.

QR code for rescue card

QR codes are attached in the fuel filler flap and on the opposite side on the B-pillar. In the event of an accident, rescue services can use the QR code to quickly find the appropriate rescue card for your vehicle. The current rescue card contains the most important information about your vehicle (e.g. the routing of the electric lines) in compact form.

Further information can be obtained at https://www.mercedes-benz.de/qr-code

Starting assistance and charging the 12 V battery

Starting assistance/preparation for charging

Plug-in hybrid: to be started, the vehicle requires an adequate state of charge in the high-voltage battery and sufficient power in the 12 V onboard electrical system.

- Secure the vehicle with the electric parking brake.
- Shift the transmission to position P.

- Switch the vehicle and all electrical consumers off.
- Open the bonnet.

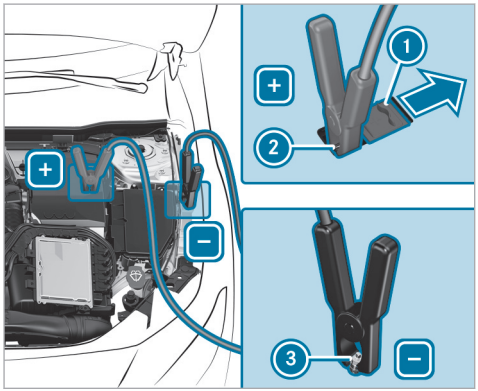

- Slide the cover ① of the positive terminal ② on the jump-start connection point in the direction of the arrow.

Starting assistance

- Connect the jump lead to the positive terminal of your vehicle.
- Connect the jump lead to the positive terminal of the donor battery.
- Run the engine of the assisting vehicle at idling speed.
- Connect the jump lead to the negative terminal of the donor battery.
- Connect the jump lead to the earth point ③ of your vehicle.
- Start the engine of your vehicle.
- Let the engine run for a few minutes.
- Before disconnecting the jump leads, switch on an electrical consumer in your vehicle, e.g. the rear window heating or lights.

When the starting assistance has been completed:

- Disconnect the jump lead from the earth point ③ of your vehicle.
- Disconnect the jump lead from the negative terminal of the donor battery.
- Disconnect the jump lead from the positive terminal of your own vehicle.
- Disconnect the jump lead from the positive terminal of the donor battery.
- After removing the jump leads, close the cover ① of the positive terminal ②.

Plug-in hybrid: if the vehicle has been jump-started, the electric drive system may not be available for around 30 minutes.

Further information can be obtained at a qualified specialist workshop.

Charging the 12 V battery

- Connect the charging cable to the positive terminal of your vehicle.
- Connect the charging cable to the positive terminal of the charger.
- Connect the charging cable to the negative terminal of the charger.
- Connect the charging cable to the earth point ③ of your vehicle.

▶ Start the charging procedure.

When the charging procedure has been completed:

▶ Disconnect the charging cable from the earth point ③ of your vehicle.

▶ Disconnect the charging cable from the negative terminal of the charger.

▶ Disconnect the charging cable from the positive terminal of your vehicle.

▶ Disconnect the charging cable from the positive terminal of the charger.

▶ After removing the charging cables, close the cover ① of the positive terminal ②.

Notes on electrical fuses

⚠ WARNING Risk of accident and injury due to overloaded lines

If you manipulate or bridge a faulty fuse or if you replace it with a fuse with a higher amperage, the electric line could be overloaded.

This could result in a fire.

▶ Always replace faulty fuses with specified new fuses containing the correct amperage.

! NOTE Damage due to incorrect fuses

Using incorrect fuses can result in damage to electrical components or systems or their functions being considerably restricted.

▶ Use only fuses approved for Mercedes-Benz with the respective specified fuse rating.

Blown fuses must be replaced with fuses of the same rating, which you can recognise by the colour and the label. The fuse ratings and further information to be observed can be found in the fuse assignment diagram.

Fuse assignment diagram: on the fuse box in the engine compartment (→ page 595).

! NOTE Damage or malfunctions caused by moisture

Moisture may cause damage to the electrical system or cause it to malfunction.

▶ When the fuse box is open, make sure that no moisture can enter the fuse box.

▶ When closing the fuse box, make sure that the seal of the lid is positioned correctly on the fuse box.

If the newly inserted fuse also blows, have the cause traced and rectified at a qualified specialist workshop.

Ensure the following before replacing a fuse:

- The vehicle is secured against rolling away.
- All electrical consumers are switched off.
- The vehicle is switched off.

The electrical fuses are located in various fuse boxes:

- Fuse box in the engine compartment on the left-hand side of the vehicle, when viewed in the direction of travel (→ page 595)

- Fuse box in the front passenger footwell (→ page 596)
- Fuse box in the centre of the boot (→ page 597)

Notes on flat tyres

⚠ **WARNING** Risk of accident due to a flat tyre

A flat tyre severely affects the driving characteristics as well as steering and braking.

tyres that do not feature run-flat characteristics:

▶ Do not drive on with a flat tyre.

▶ Change the flat tyre immediately with an emergency spare wheel or spare wheel. Alternatively, consult a qualified specialist workshop.

Run-flat tyres:

▶ Observe the information and warning notes on MOExtended tyres (run-flat tyres).

In the event of a flat tyre, the following options are available depending on your vehicle's equipment:

- **Vehicles with MOExtended tyres:** it is possible to continue the journey for a short period of time. Make sure you observe the notes on MOExtended tyres (run-flat tyres) (→ page 575).
- **Vehicles with a TIREFIT kit:** you can seal the tyre so that it is possible to continue the journey for a short period of time. To do this, use the TIREFIT kit (→ page 577).
- (→ page 514)**Vehicles with Mercedes me connect:** you can make a call for breakdown assistance via the overhead control panel in the case of a breakdown .
- **All vehicles:** change the wheel (→ page 608).

ⓘ (→ page 613)The emergency spare wheel is only available in certain countries.

Overview of the tyre-change tool kit

Apart from some country-specific variants, vehicles are not equipped with a tyre-change tool kit.

Consult a qualified specialist workshop to find out which wheel change tool is necessary and approved for a wheel change on your vehicle.

You require the following tools, forexample, to change a wheel:

- Jack
- Chock
- Wheel wrench
- Centring pin

ⓘ The jack weighs approximately 3.4 kg. The maximum load capacity of the jack can be found on the sticker affixed to the jack. The jack is maintenance-free. If there is a malfunction, please contact a qualified specialist workshop.

The tyre-change tool kit is located in tool bag ① in the boot.

ⓘ Depending on the vehicle equipment, the tool bag may be located at other positions in the boot.

ⓘ When stowing the tool bag, make sure that it is adequately secured.

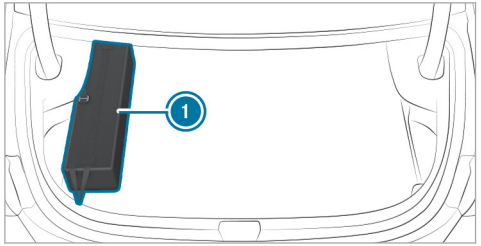

The tool bag contains:

- Jack
- Gloves
- Wheel wrench
- Centring pin
- Folding chock
- Ratchet for jack

TIREFIT kit storage location

The TIREFIT kit is located under the boot floor.

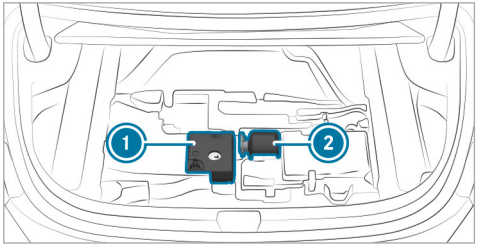

1. Tyre sealant bottle
2. Tyre inflation compressor

The TIREFIT kit may be located in other positions under the boot floor depending on the vehicle version.

ⓘ You can find information on the power category (LK) and/or electrical data on the back of the tyre inflation compressor:

- LK2 – 12 V/15 A, 180 W, 0.8 kg

At a distance of approximately 1 m to the tyre inflation compressor and approximately 1.6 m above the ground, the following sound pressure levels apply:

- Emission sound pressure level L_{PA} 83 dB (A)
- Sound power level L_{WA} 91 dB (A)

The tyre inflation compressor is maintenance-free. If there is a malfunction, please contact a qualified specialist workshop.

Towing the vehicle with both axles on the ground

▶ Observe the notes on the permitted towing methods.

▶ Make sure that the battery is connected and charged.

Observe the following points when the battery is discharged:

- The vehicle cannot be started.
- The electric parking brake cannot be released or applied.

- **Vehicles with automatic transmission:** the transmission cannot be shifted to position N or P.

ⓘ **Vehicles with automatic transmission:** if the transmission cannot be shifted to position N or if the display does not show anything, transport the vehicle (→ page 592). A towing vehicle with lifting equipment is required for vehicle transportation.

! NOTE Damage due to towing away at excessively high speeds or over long distances

The drivetrain could be damaged when towing at excessively high speeds or over long distances.

▶ A towing speed of 50 km/h must not be exceeded.

▶ A towing distance of 50 km must not be exceeded.

⚠ WARNING Risk of accident when towing a vehicle which is too heavy

If the vehicle to be tow-started or towed away is heavier than the permissible gross mass of your vehicle, the following situations can occur:

- the towing eye may become detached.
- the vehicle/trailer combination may swerve or overturn.

▶ Before tow-starting or towing away, check if the vehicle to be tow-started or towed away exceeds the permissible gross mass.

If a vehicle has to be tow-started or towed away, its permissible gross mass must not exceed the permissible gross mass of the towing vehicle.

▶ Information on the permissible gross mass of the vehicle can be found on the vehicle identification plate (→ page 734).

▶ **Vehicles with automatic transmission:** do not open the driver's door or front-passenger door; the transmission otherwise automatically shifts to position P.

▶ Fit the towing eye (→ page 593).

▶ Fasten the towing device.

! NOTE Damage due to incorrect connection of the tow bar

▶ Only connect the tow rope or tow bar to the towing eyes.

▶ Deactivate the automatic locking mechanism (→ page 148).

▶ Do not activate the HOLD function.

▶ Deactivate tow-away protection (→ page 162).

▶ Deactivate Active Brake Assist (→ page 334).

▶ **Vehicles with automatic transmission:** shift to position N.

▶ Release the electric parking brake.

▶ Switch on the vehicle; the steering wheel lock may otherwise engage.

WARNING Risk of accident due to limited safety-related functions during the towing process

Safety-related functions are limited or no longer available in the following situations:

- the vehicle is switched off.
- the brake system or power steering system is malfunctioning.
- the energy supply or the on-board electrical system is malfunctioning.

When your vehicle is towed away, significantly more effort may be required to steer and brake than is normally required.

▶ Use a tow bar.

▶ Make sure that the steering wheel can move freely before towing the vehicle away.

NOTE Damage due to excessive tractive power

If you pull away sharply, the tractive power may be too high and the vehicles could be damaged.

▶ Pull away slowly and smoothly.

Expert tips

Additional functions of buttons

Opening and closing the windows using the air-recirculation button (convenience closing/opening)

When air-recirculation mode is activated, the side windows close automatically, for example, before entering a tunnel. When the air-recirculation mode is deactivated, the side windows move back to their original position.

WARNING Risk of entrapment due to not paying attention during convenience closing

When the convenience closing feature is operating, parts of the body could become trapped in the closing area of the side window and the sliding sunroof.

▶ When the convenience closing feature is operating, monitor the entire closing process and make sure that no body parts are in the closing area.

WARNING Risk of entrapment due to not paying attention during convenience closing

When the convenience closing feature is operating, parts of the body could become trapped in the closing area of the side windows.

▶ When the convenience closing feature is operating, monitor the entire closing process and make sure that no body parts are in the closing area.

▶ **To close the windows:** press and hold the button until the windows start to move. The windows close and air-recirculation mode switches on.

⚠ **WARNING** Risk of entrapment from the convenience opening feature

During convenience opening parts of the body could be drawn in or become trapped between the side window and window frame.

- When opening, make sure that nobody is touching the side windows.
- If someone becomes trapped, immediately press the button in the door to open the side windows. The side windows stop.
- To continue closing the side windows, pull on the button.

▶ **To reopen closed windows:** press and hold the button until the windows start to move. The windows move back to their original position and air-recirculation mode switches off.

Vehicles with a sliding sunroof: the sliding sunroof closes or opens simultaneously.

If body parts become entrapped in the sliding sunroof:

▶ **To stop:** press the button.

▶ **To open:** pull the button back.

Resetting the climate control settings

▶ Press and hold the AUTO button on the front control panel for four seconds. The climate control settings will be reset to the basic settings.

Activating/deactivating traffic announcements

Multimedia system:

Radio

▶ Select Radio announcements. The traffic information is switched on or off.

Useful vehicle functions

Storing the parking position of the front-passenger outside mirror using the memory button

Requirements:

- Reverse gear has not been engaged.

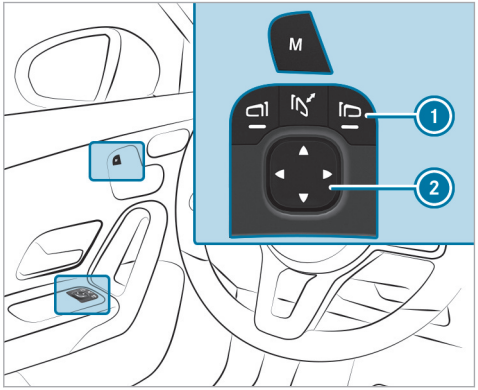

- ▶ Select the front-passenger outside mirror using button ①.
- ▶ Move the front-passenger outside mirror into the desired parking position using button ②.
- ▶ Press the M button.
- ▶ Confirm immediately using button ② to store the setting.

ⓘ No more than three seconds may pass between the M button and button ② being pressed. The mirror adjustment will be cancelled after three seconds.

Tips for on the move

Vehicle conditions for automatic engine stop or start

Conditions for automatic engine stop:

- The ECO start/stop function is switched on.
- The brake system does not require a running engine.
- The outside temperature is within the range that is suitable for the system.
- The atmospheric air pressure is within the range that is suitable for the system.
- The engine is at normal operating temperature.
- Engine diagnostics are not active.
- The engine speed is within the range that is suitable for the system.
- The transmission oil temperature is within the range that is suitable for the system.
- The temperature in the vehicle interior is within the set range.
- The fuel tank is sufficiently full.
- The system detects that there is no moisture on the windscreen when the air conditioning system is switched on.
- The state of charge and the voltage of the battery are sufficient.
- The battery temperature is within the range that is suitable for the system.
- The system does not detect a steep gradient.
- The bonnet is closed.

Conditions for automatic engine start:

- The vehicle is rolling.
- The brake system requires a running engine.
- The outside temperature has exceeded the range that is suitable for the system.
- The atmospheric air pressure has exceeded the range that is suitable for the system.
- Engine diagnostics require a running engine.
- The transmission oil temperature has exceeded the range that is suitable for the system.
- The temperature in the vehicle interior deviates from the set range.
- The system detects moisture on the windscreen when the air conditioning system is switched on.
- The state of charge of the battery is too low.
- The battery temperature has exceeded the range that is suitable for the system.

Good to know

Deactivating the function of the key

Vehicles with KEYLESS-GO: if you deactivate the function of the key, the KEYLESS-GO functions are also deactivated. Access or drive authorization via KEYLESS-GO is then no longer possible with that key. Activate the function of the key so that all of its functions are available once again.

You can also deactivate the key's function to reduce the key's energy consumption if you do not use the vehicle or a key for an extended period of time.

▶ Press and hold the key button [🔒].

▶ With the key button [🔒] pressed, immediately press key button [🔓] twice in quick succession.
The indicator light of the key lights up once briefly, and then again for longer.

ⓘ You have the following options to reactivate the key:

- Press any button on the key.
- Start the vehicle with the key in the centre console storage compartment(→ page 234).

Overview of emergency call systems

Both the Mercedes-Benz emergency call system as well as the 112 emergency call system (EU eCall) can help to reduce the time between an accident and the arrival of emergency services at the site of the accident. They help locate an accident site in places that are difficult to access.

Both emergency call systems can initiate an emergency call automatically (→ page 524) or manually (→ page 524).

Only make emergency calls if you or others are in need of rescue. Do not make an emergency call in the event of a breakdown or a similar situation.

Indicators in the displays

The following messages appear on the central display or the media display of both emergency call systems:

- SOS NOT READY: the vehicle is not switched on or the emergency call system is malfunctioning. This does not necessarily indicate complete failure of the emergency call system. Emergency calls can still be transmitted.

  The display only refers to the vehicle and does not take account of the availability of mobile phone networks and the Mercedes-Benz emergency call centre.

  The functional readiness of the emergency call system on the vehicle can be seen when the SOS NOT READY display disappears once the vehicle is switched on.
- [SOS]: the icon appears in the display during an active emergency call.

ⓘ If there is a malfunction of the emergency call system, the loudspeakers, microphone, airbag or the SOS button, for example, are faulty.

You can recognise a fault in the emergency call system by the following displays:

- A corresponding message will also appear in the driver's display.
- The SOS button lights up red continuously.

Emergency guide

In the event of an accident or breakdown, the emergency guide shows safety notes on the central display.

These include, for example:

- Recommended actions when leaving the vehicle
- Procedure for safely removing seat belts in the event of an accident whereby the vehicle comes to rest on its roof

The emergency guide is activated in the following situations:

- Occupant protection system has been triggered
- An emergency call is made
- Certain breakdown situations

ⓘ The availability as well as the scope of the emergency guide can vary depending in the country and vehicle equipment.

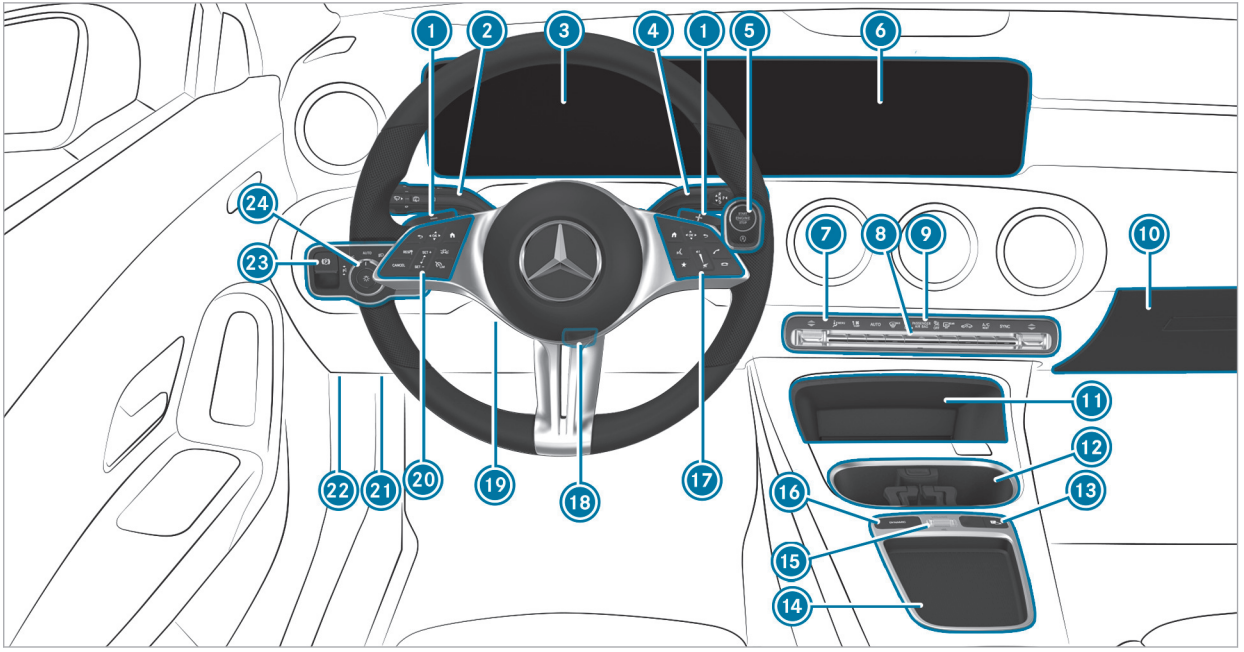

Left-hand-drive vehicles

F177 0066 02

1	Steering wheel gearshift paddles	→	263
2	Combination switch	→	201
3	Driver's display	→	397
4	DIRECT SELECT lever	→	257
5	ENGINE START / STOP Start/stop button	→	232
	ECO start/stop function	→	242
6	Central display		
7	Climate control systems	→	220
8	Hazard warning light system	→	48
9	PASSENGER AIR BAG indicator lamps	→	103
10	Glove compartment	→	42
11	Stowage compartment	→	42
12	Cup holder	→	191
13	Active Parking Assist	→	364
14	Stowage space		
15	Controller for volume and switching sound on/off		
	Switches the MBUX multimedia system on/off		
16	DYNAMIC SELECT button	→	253
17	Control panel for the MBUX multimedia system		
18	Adjusts the steering wheel	→	178
19	Switches the steering wheel heater on/off	→	179
20	Control panel:		
	Driver's display	→	397
	Cruise control or variable limiter	→	316
	LIM Active Distance Assist DISTRONIC	→	321
21	Diagnostics connection	→	90
22	Opening the bonnet	→	555
23	Electric parking brake	→	297
24	Light switch	→	199

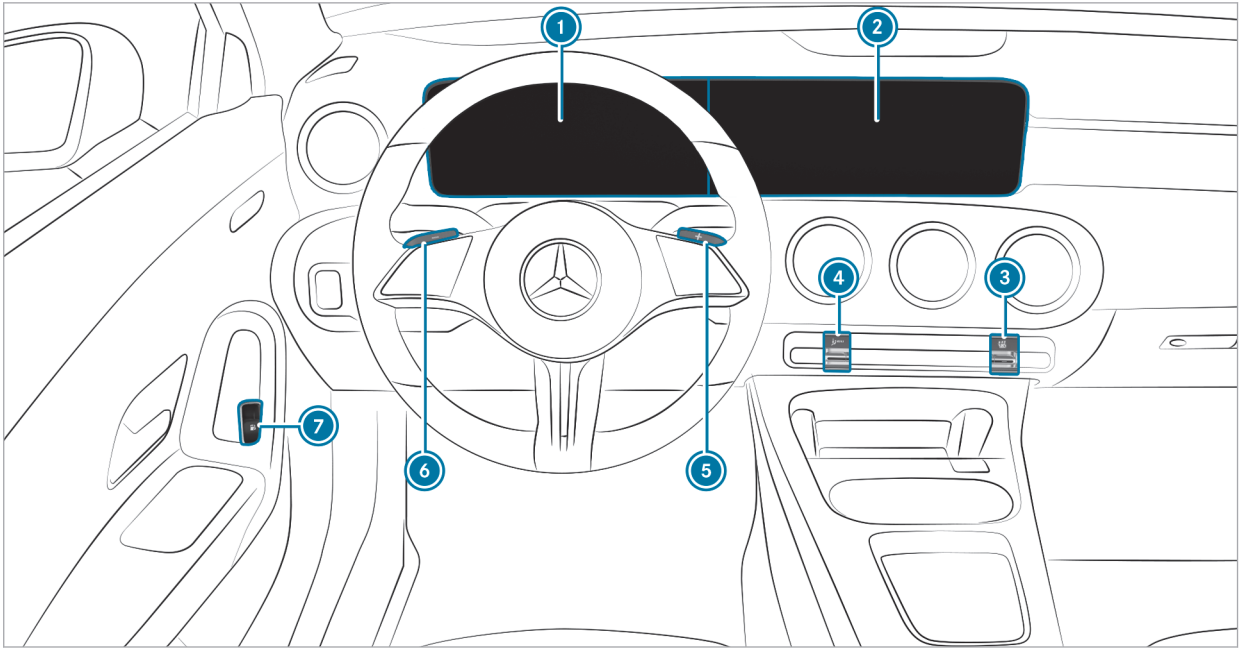

Left-hand-drive vehicles

F177 0066 02

1	Driver's display:		
	READY Operational readiness	→	395
	Power availability display	→	395
	Power meter	→	396
	Trip computer		
	ECO Assist	→	247
2	Central display:		
	Plug-in hybrid settings	→	446
	Energy flow display	→	447
3	Switches immediate pre-entry climate control on/off	→	225
4	MENU Sets pre-entry climate control at departure time	→	225
5	+ Reduces recuperation	→	246
6	– Increases recuperation	→	246
7	Depressurises the fuel tank	→	22

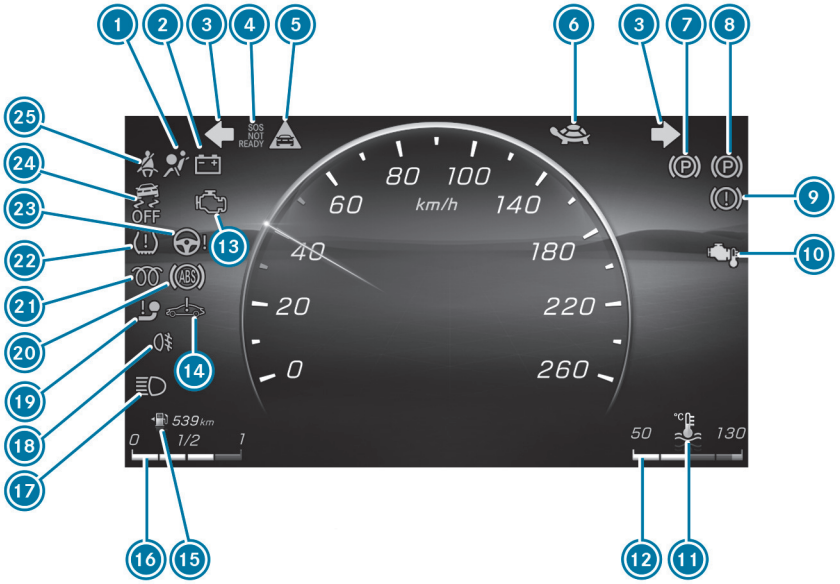

Standard driver's display

F177 0066 02

1	Restraint system	→	840
2	Electrical fault	→	845
3	Turn signal lights	→	201
4	Mercedes-Benz emergency call system	→	857
5	Distance warning	→	851
6	Plug-in hybrid: reduced power	→	842
7	Electric parking brake (yellow)	→	849
8	Electric parking brake (red)	→	849
9	Brakes (yellow)	→	849
	Brakes (red)	→	849
10	Petrol engine: reduced power	→	255
11	Coolant temperature	→	845
12	Coolant temperature display		
13	Engine diagnostics	→	845
14	System error	→	842
15	Reserve fuel with fuel filler flap location indicator	→	845
16	Fuel level		
17	High beam	→	201
	Low beam	→	199
	Side lights	→	199
18	Rear fog light	→	200
19	Trailer hitch	→	843
20	ABS	→	851
21	Diesel engine: preglow		
22	Tyre pressure monitoring system	→	857
23	Power steering	→	843
24	ESP® OFF	→	851
	ESP®	→	851
25	Seat belt	→	840

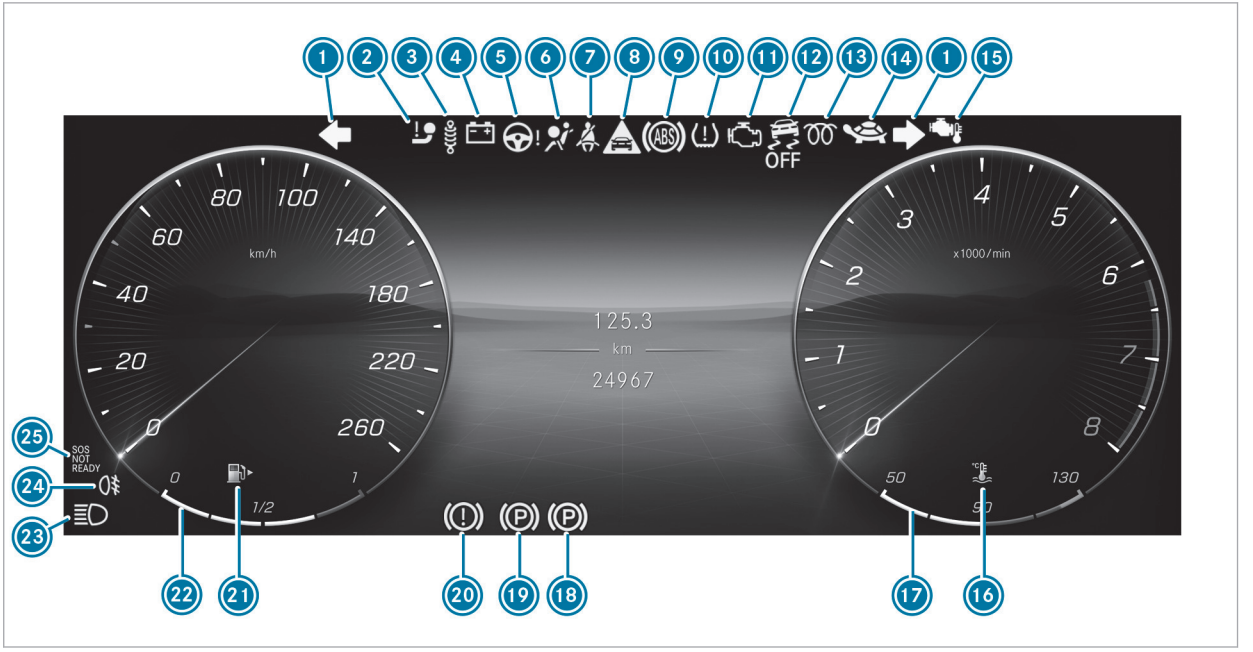

Widescreen driver's display

F177 0066 02

1	Turn signal lights	→	201
2	Trailer hitch	→	843
3	Suspension (red)	→	851
	Suspension (yellow)	→	851
4	Electrical fault	→	845
5	Power steering (red)	→	843
	Power steering (yellow)	→	843
6	Restraint system	→	840
7	Seat belt	→	840
8	Distance warning	→	851
9	ABS	→	851
10	Tyre pressure monitoring system	→	857
11	Engine diagnostics	→	845
12	ESP® OFF	→	851
	ESP®	→	851
13	Diesel engine: preglow		
14	Plug-in hybrid: reduced power	→	842
15	Petrol engine: reduced power	→	255
16	Coolant temperature	→	845
17	Coolant temperature display	→	382
18	Electric parking brake (yellow)	→	849
19	Electric parking brake (red)	→	849
20	Brakes (red)	→	849
	Brakes (yellow)	→	849
21	Reserve fuel with fuel filler flap location indicator	→	845
22	Fuel level	→	382
23	High beam	→	201
	Low beam	→	199
	Parking lights	→	199
24	Rear fog light	→	200
25	Mercedes-Benz emergency call system	→	857

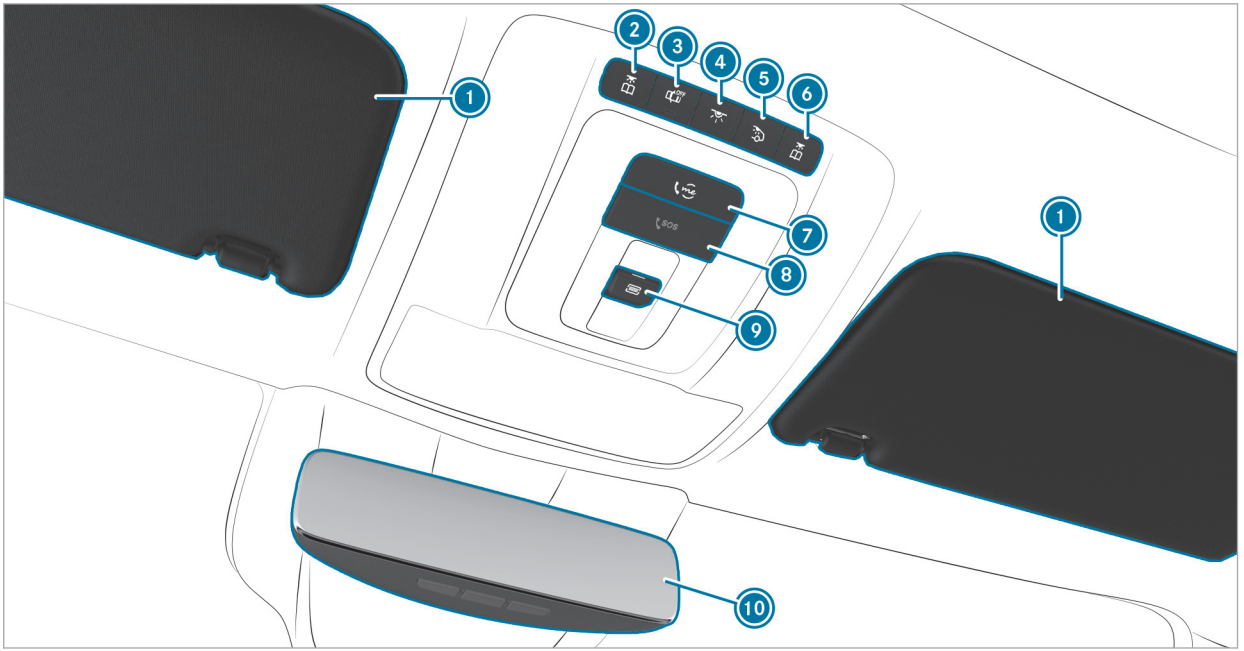

F177 0066 02

1	Sun visors		
2	Switches the left-hand reading lamp on/off	→	208
3	Switches automatic interior lighting control on/off	→	208
4	Switches the front interior lighting on/off	→	208
5	Switches the rear interior lighting on/off	→	208
6	Switches the right-hand reading lamp on/off	→	208
7	me button	→	514
8	SOS button	→	514
9	Opens/closes the panorama sliding sunroof	→	157
	Opens/closes the roller sunblind	→	157
10	Inside rear-view mirror	→	215

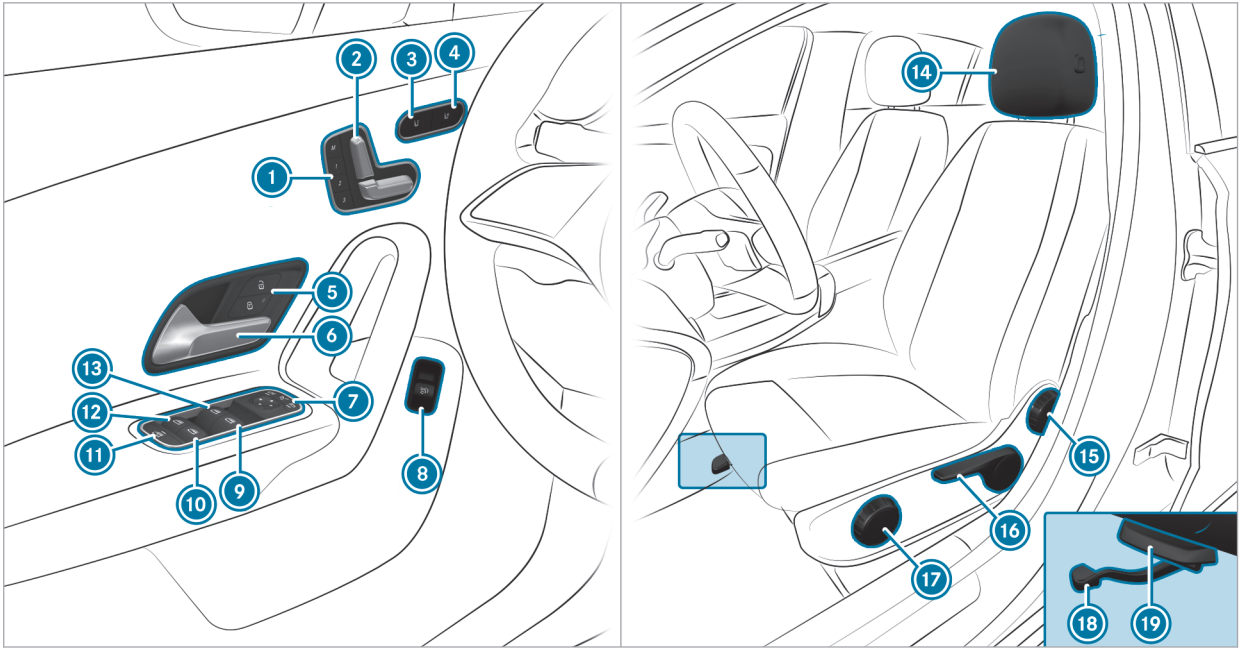

F177 0066 02

1	M Operating the memory function	→	181
2	Adjusts the seats electrically	→	170
3	Switching the seat heating on/off	→	177
4	Mercedes-AMG vehicles only: switches seat ventilation on/off		
5	Locks/unlocks the vehicle	→	146
6	Opens the door	→	146
7	Operating the outside mirrors	→	213
8	Opening the boot lid	→	150
9	Opens/closes the right side window	→	153
10	Opens/closes the rear right side window	→	153
11	Child safety lock for the rear side windows	→	138
12	Opens/closes the rear left side window	→	153
13	Opens/closes the left side window	→	153
14	Adjusting the head restraints	→	173
15	Adjusting the seat backrest inclination	→	168
16	Adjusting the seat height	→	168
17	Adjusts the seat cushion inclination	→	168
18	Adjusts the seat fore-and-aft position	→	168
19	Adjusts the seat cushion length	→	168

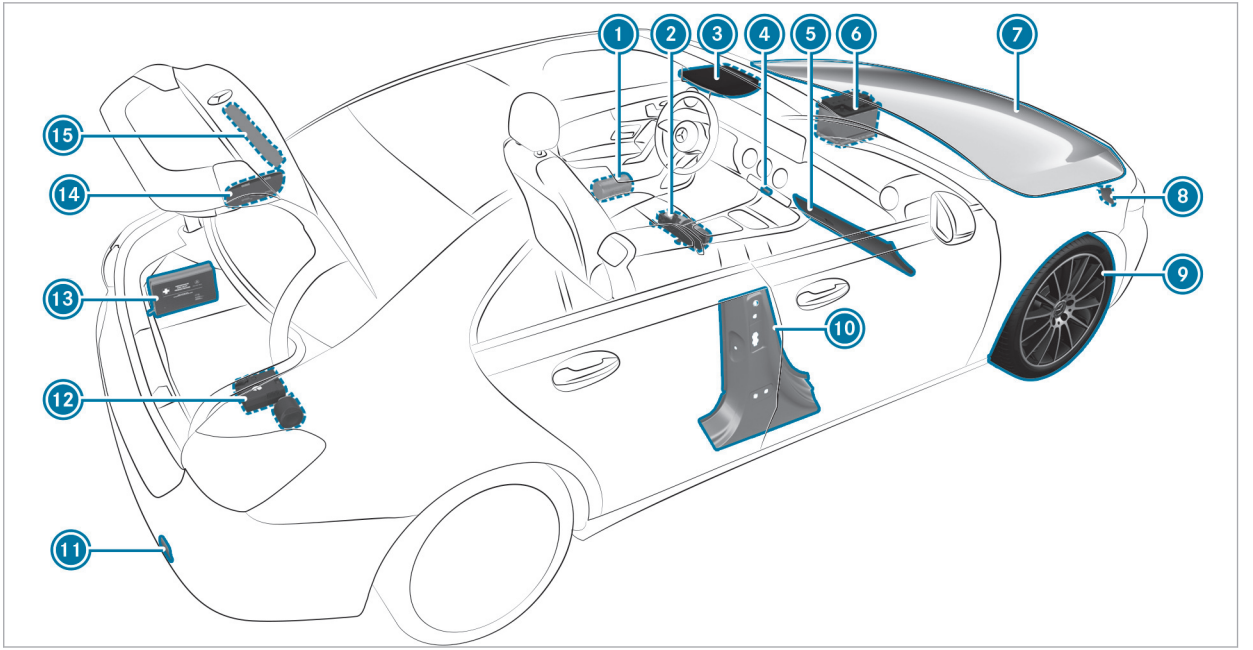

F177 0066 02

1	Safety vests	→	32
2	Fire extinguisher	→	48
3	me button	→	514
	SOS button	→	514
4	Hazard warning light system	→	48
5	Stowage compartment for customer literature	→	185
6	Starting assistance	→	50
7	Checking and topping up service products	→	735
8	Tow-starting or towing away	→	54
9	Flat tyre	→	53
10	B-pillar with:		
	QR code for accessing the rescue card	→	50
11	Tow-starting or towing away	→	54
12	TIREFIT kit	→	577
13	First-aid kit (soft-sided)	→	33
14	Fuel filler flap with:		
	Information label on fuel type	→	22
	Information label on tyre pressure	→	600
	QR code for accessing the rescue card	→	50
15	Warning triangle	→	33

Calling up the Digital Owner's Manual

Multimedia system:

→ [⌂] ▸▸ Settings ▸▸ Info
▸▸ Owner's Manual
▸▸ Open Digital Owner's Manual

The Digital Owner's Manual describes the functions and operation of the vehicle and the multimedia system.

▶ Select one of the following menu items in the Digital Owner's Manual:

- Quick start: find the first steps towards adjusting your seat (driver's side).
- Tips: find information that prepares you for certain everyday situations with your vehicle.
- Animations: watch animations of the vehicle functions.
- Messages: receive additional information about the messages in the driver's display.
- Language: select the language for the Digital Owner's Manual.

You can search for keywords using the search field Search, in order to find quick answers to questions about the operation of the vehicle.

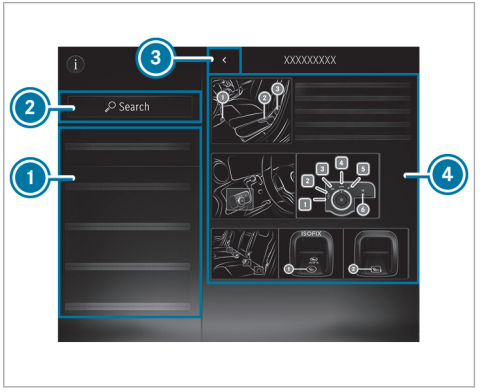

1. Menu
2. Search
3. Back
4. Contents section

Some sections in the Digital Owner's Manual, suchas warning notes, can be expanded and collapsed.

Additional methods of calling up the Digital Owner's Manual:

Driver's display: call up brief information as display messages in the driver's display

MBUX Voice Assistant: call up via the voice control system

Global search: call up search results for contents of the Digital Owner's Manual in the home screen

For safety reasons, the Digital Owner's Manual is deactivated while driving.

Protection of the environment

ENVIRONMENTAL NOTE Environmental damage due to operating conditions and personal driving style

The pollutant emission of the vehicle is directly related to the way you operate the vehicle.

Operate your vehicle in an environmentally responsible manner to help protect the environment. Please observe the following recommendations on operating conditions and personal driving style.

Operating conditions:

- ▶ Make sure that the tyre pressure is correct.
- ▶ Do not carry any unnecessary weight (e.g. roof luggage racks once you no longer need them).
- ▶ Adhere to the service intervals. A regularly serviced vehicle will contribute to environmental protection.
- ▶ Always have maintenance work carried out at a qualified specialist workshop.

Personal driving style:

- ▶ Do not depress the accelerator pedal when starting the engine.
- ▶ Do not warm up the vehicle while stationary.
- ▶ Drive carefully and maintain a suitable distance from the vehicle in front.
- ▶ Avoid frequent, sudden acceleration and braking.
- ▶ Change gear in good time and use each gear only up to ⅔ of its maximum engine speed.
- ▶ Switch off the vehicle in stationary traffic, e.g. by using the ECO start/stop function.
- ▶ Drive in a fuel-efficient manner. Observe the ECO display for an economical driving style.

Plug-in hybrid

ENVIRONMENTAL NOTE Environmental pollution caused by irresponsible disposal of the high-voltage battery

A high-voltage battery contains materials which are harmful to the environment.

- ▶ Dispose of faulty high-voltage batteries at a qualified specialist workshop.

Take-back of end-of-life vehicles

EU countries only:
Mercedes-Benz will take back your end-of-life vehicle for environment-friendly disposal in accordance with the European Union (EU) End-Of-Life Vehicles Directive.

A network of vehicle take-back points and dismantlers has been established for you to return your vehicle. You can leave it at any of these points free of charge. This makes an important contribution to closing the recycling circle and conserving resources.

For further information about the recycling and disposal of end-of-life vehicles, and the take-back conditions, please visit the national Mercedes-Benz website for your country.

Mercedes-Benz GenuineParts

ENVIRONMENTAL NOTE Environmental damage caused by not using recycled reconditioned components

Mercedes-Benz AG offers recycled reconditioned components and parts with the same quality as new parts. The same entitlement from the implied warranty is valid as for new parts.

▶ Recycled reconditioned components and parts from Mercedes-Benz AG.

NOTE Impairment of the operating efficiency of the restraint systems from installing accessory parts or from repairs or welding

Airbags and seat belt tensioners, as well as control units and sensors for the restraint systems, may be installed in the following areas of your vehicle:

- doors
- door pillars
- Sill
- Seats
- Cockpit
- Driver's display
- Centre console
- lateral roof frame

▶ Do not install accessory parts such as audio systems in these areas.

▶ Do not carry out repairs or welding.

▶ Have accessories retrofitted at a qualified specialist workshop.

You could jeopardise the operating safety of your vehicle if you use parts, tyres and wheels as well as accessories relevant to safety that have not been approved by Mercedes-Benz. Safety-critical systems (e.g. the brake system) may malfunction. Use only Mercedes-Benz GenuineParts or parts of equal quality. Use only tyres, wheels and accessory parts that have been specifically approved for your vehicle model.

Mercedes-Benz tests original parts and conversion parts and accessory parts that have been specifically approved for your vehicle model for their reliability, safety and suitability. Despite ongoing market research, Mercedes-Benz is unable to assess other parts. Mercedes-Benz therefore accepts no responsibility for the use of such parts in Mercedes-Benz vehicles, even if they have been officially approved or independently approved by a testing centre.

Certain parts are officially approved for installation or modification only if they comply with legal requirements. All Mercedes-Benz GenuineParts

meet the approval requirements. The use of non-approved parts may invalidate the vehicle's general operating permit.

This will be the case in the following situations:

- The vehicle type is different from that for which the vehicle's general operating permit was granted.
- Other road users could be endangered.
- The emissions or noise levels get worse.

Always specify the vehicle identification number (VIN) (→ page 734) when ordering Mercedes-Benz GenuineParts.

Touch-sensitive control elements

In addition to conventional switches and buttons, your vehicle is equipped with touch-sensitive control elements.

These are located in the following areas of your vehicle:

- Roof and door operating unit
- Climate control
- Steering wheel
- MBUX multimedia system

The control elements feature touch-sensitive user interface surfaces. These surfaces are controlled by pressing or swiping to adjust settings or trigger functions, forexample.

In the touchscreen area, haptic acknowledgement is relayed through the touch-sensitive surface, forexample in the form of a pulse or a vibration, or a change in user interface surface structure.

Haptic acknowledgement is relayed in the following situations, forexample:

- When pressing a button on the user interface surface
- When scrolling in a list or table
- When reaching a new area on the user interface surface, e.g. a pop-up window

When using touch-sensitive user interface surfaces, observe the following points to avoid operational problems:

- Do not affix stickers orsimilar objects on the surfaces
- Do not attach a smartphone- or other holders to the surface of the central display.
- Protect the surfaces against moisture and wet conditions.
- Keep the surfaces free of dust and dirt (→ page 568).

In addition to a symbol, some touch-sensitive control elements also feature integrated indicator lamps. Ensure that the symbol of the control element is pressed during use.

Mercedes me App

Notes about the on-demand feature

You can also activate various functions (on-demand feature) subsequently via Mercedes me after purchasing your vehicle.

Information is available at any Mercedes-Benz Service Centre.

Activating on-demand feature using Mercedes me

Requirements

- The vehicle has a wireless connection.
- The vehicle is linked to the Mercedes me user account.

Ordering and activating on-demand feature

▶ Add the desired on-demand feature for the vehicle to the shopping basket in the Mercedes me Store.

▶ Complete the order.
The on-demand feature is activated when operating the vehicle.

Speeding up activation

▶ Switch the vehicle off and lock it.

▶ Unlock the vehicle after about two minutes and switch on the vehicle.
The on-demand feature has been activated. For some features, a notification also appears in the vehicle's multimedia system.

If the activation was not successful, repeat the process.

Operating safety

⚠ **WARNING** Risk of accident due to malfunctions or system failures

If you do not have the prescribed service/maintenance work or any required repairs carried out, this could result in malfunctions or system failures.

▶ Always have the prescribed service- and maintenance work or any required repairs carried out in a qualified workshop.

⚠ **WARNING** Risk of accident or injury due to improper modifications to electronic components

Modifications to electronic components, their software or wiring can impair their functionality and/or the functionality of other networked components or safety-relevant systems.

This can endanger the vehicle's operating safety.

▶ You must not tamper with wiring, electronic components, or their software.

▶ Always have work on electrical and electronic devices carried out at a qualified specialist workshop.

If you modify the on-board electronics, the general operating permit is rendered invalid.

Observe the "On-board electronics" section in "Technical data".

⚠ **WARNING** Risk of fire due to flammable material coming into contact with hot parts of the exhaust system

If combustible materials, e.g. leaves, grass or twigs, come into contact with hot parts of the exhaust system, they may ignite.

▶ When driving off-road or on unpaved surfaces, check the underside of the vehicle at regular intervals.

▶ In particular, remove any trapped parts of plants or other flammable material.

▶ If damage should occur, immediately inform a qualified specialist workshop.

! **NOTE** Damage to the vehicle due to driving too fast and due to impacts to the vehicle underbody or suspension components

In the following situations, in particular, there is a risk of damage to the vehicle:

- the vehicle becomes grounded, e.g. on a high kerb or an unpaved road
- the vehicle is driven too fast over an obstacle, e.g. a kerb, speed bump or pothole
- a heavy object strikes the underbody or suspension components

In situations such as these, damage to the body, underbody, suspension components, wheels or tyres may not be visible. Components damaged in this way can unexpectedly fail or, in the case of an accident, may no longer absorb the resulting force as intended.

If the underbody panelling is damaged, flammable materials such as leaves, grass or twigs can collect between the underbody and the underbody panelling. These materials may ignite if they come into contact with hot parts of the exhaust system.

▶ Have the vehicle checked and repaired immediately at a qualified specialist workshop.

or

▶ If driving safety is impaired while continuing your journey, pull over and stop the vehicle immediately, while paying attention to road and traffic conditions, and contact a qualified specialist workshop.

Plug-in hybrid

Hybrid vehicles have a combustion engine and at least one electric motor. The energy supply for operating the vehicle electrically is provided by the high-voltage on-board electrical system.

⚠ **DANGER** Risk of death and fire due to modified and/or damaged components of the high-voltage on-board electrical system

The vehicle's high-voltage on-board electrical system is under high voltage. If you modify component parts in the vehicle's high-voltage on-board electrical system or touch damaged component parts, you may be electrocuted. In addition, modified and/or damaged components may cause a fire.

In the event of an accident or impact to the underbody, components of the high-voltage on-board electrical system may be damaged although the damage is not visible.

▶ Never make any modifications to the high-voltage on-board electrical system.

▶ Do not switch on or use the vehicle if its high-voltage on-board electrical system components have been modified or damaged.

- ▶ Never touch damaged components of the high-voltage on-board electrical system.
- ▶ After an accident, do not touch any components of the high-voltage on-board electrical system.
- ▶ After an accident, have the vehicle transported away.
- ▶ Have the components of the high-voltage on-board electrical system checked at a qualified specialist workshop and replaced if necessary.

The components of the high-voltage on-board electrical system are marked with yellow warning stickers. The cables of the high-voltage on-board electrical system are orange.

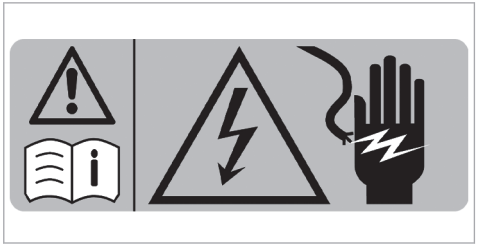

Example

High-voltage components which can become very hot are marked with a separate warning sticker:

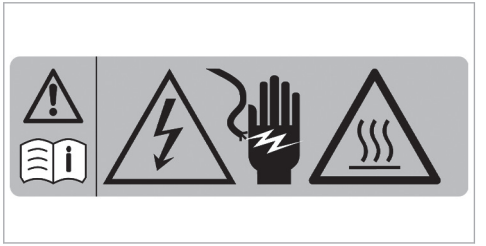

vehicles with hybrid systems generate significantly less noise than vehicles with combustion engines.

When driving in electric mode, the vehicle may not be heard by other road users due to the significantly reduced noise generated.

It is for this reason that the vehicle is equipped with a sound generator, which serves as an acoustic vehicle alerting system (AVAS). This protective device is prescribed by law.

The exterior noise of the sound generator (AVAS) is perceptible at low speeds in the vehicle interior and is not a malfunction.

Vehicles with a 48 V on-board electrical system

⚠ **DANGER** Risk of fatal injury by touching damaged high-voltage components

Vehicles with a 48 V on-board electrical system contain individual high-voltage components. These high-voltage components are under high voltage.

If you modify component parts of these high-voltage components or touch damaged component parts, you may be electrocuted.

High voltage components may be damaged in an accident, although the damage may not be visible.

- ▶ Never perform modifications to component parts of high-voltage components.
- ▶ Never touch damaged component parts of high-voltage components.
- ▶ Never touch component parts of high-voltage components after an accident.

Vehicles with a 48 V on-board electrical system contain high voltage components. These components are marked with a high voltage label:

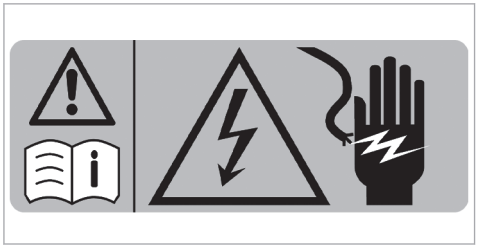

Example

All work on high voltage components must be carried out at a qualified specialist workshop.

Fitting the licence plate onto the front licence plate bracket

! **NOTE** Malfunctions and system failures due to incorrect assembly of the licence plate on the front licence plate holder

If the licence plate is incorrectly assembled on the front licence plate holder, sensors, cameras or driving and safety systems may malfunction or fail.

Observe the following points when assembling the licence plate on the front licence plate holder:

- ▶ Assemble the licence plate directly on the licence plate holder without advertising media or other holders.
- ▶ Assemble the licence plate so that it does not protrude above or to the side of the licence plate adapter.

Declarations of conformity and notes on driving in different countries

Electromagnetic compatibility

The electromagnetic compatibility of the vehicle components has been checked and certified according to the currently valid version of Regulation UN-R 10.

Country-specific information for regulatory radio components

Notes when crossing national borders

You must observe the radio regulatory provisions for the country in which you are currently driving when operating the vehicle.

Wireless vehicle components

Only for EU and EFTA countries and countries that recognise the EU manufacturer's declaration of conformity:

The following information applies to all wireless components of the vehicle and of the information systems and communication devices integrated in the vehicle:

The manufacturers of the wireless components ensure that all wireless components installed in the vehicle comply with Directive 2014/53/EU. The full texts of the EU declarations of conformity are available at the following web address:

https://moba.i.mercedes-benz.com/markets/ece-row/baix/cars/certificates-of-conformity/en_GB/index.html

You can obtain further information from a Mercedes-Benz service centre.

For Israel only:

It is prohibited to make any change to a vehicle-installed radio component that could affect the wireless specifications of the device, including software changes, replacement of the original antenna, or adding the option to connect the device to an external antenna, without first obtaining approval from the Communica-tions Ministry, because of concern about wireless interference.

For the United Kingdom only:

The following information applies to all wireless components of the vehicle and of the information systems and communication devices integrated in the vehicle:

The manufacturers of the radio components declare that all radio equipment installed in the vehicle is in compliance with the relevant statutory requirements. The full texts of the declarations of conformity are available at the following web address:

https://moba.i.mercedes-benz.com/markets/ece-row/baix/cars/certificates-of-conformity/en_GB/index.html

For Brazil only:

ANATEL

Note on two-way radio systems in the vehicle:

These systems are not protected against harmful interference and must not cause interference in properly approved systems.

For Jamaica only:
All wireless vehicle components have received type approval from the SMA.

For Nigeria only:

Connection and use of this communications equipment is permitted by the Nigerian Communications Commission

Connection and use of the radio communications equipment in this vehicle is permitted by the Nigerian Communications Commission

For Russia only:

EAC EAC

The manufacturers of the wireless components installed in the vehicle hereby declare that all wireless components installed in the vehicle comply with the technical regulations for two-way radios. You can obtain further information from a Mercedes-Benz service centre.

For Ukraine only:

The manufacturers of the wireless components installed in the vehicle hereby declare that the wireless components installed in the vehicle comply with the technical regulations for two-way radios. You can obtain further information from a Mercedes-Benz service centre.

Jack

Only for EU and EFTA countries and countries that recognize the EU manufacturer's Declaration of Conformity:
CE Declaration of Conformity

Copy and translation of the original Declaration of Conformity:

EC Declaration of Conformity

1.

The signatory, as a representative

Manufacturer:

BRANO a.s.

747 41 Hradec nad Moravicí, Opavská 1000,

Czech Republic

ID No.: 64-387-5933

VAT Reg. No.: CZ64-387-5933

declares, as our sole responsibility, that the product:

2. a)

Description:

Jack

Type, number:

A) A 164 580 02 18, A 166 580 01 18

B) A 240 580 00 18

C) A 639 580 02 18

D) A 639 580 03 18

E) A 910 580 00 00

F) A 247 580 00 00, A 293 580 00 00

G) A 247 580 01 00, A 293 580 01 00

H) A 247 580 02 00, A 293 580 02 00

Manufacture year: 2022

Fulfils all relevant conditions

Directive No. 2006/42/EC

b)

Description and intended use:

The sole intended use of the jack is raising the specified vehicle in accordance with the operating instructions affixed to the jack.

3.

Reference data of the harmonised standards or specifications

ISO 4063, EN ISO 14341-A, AS 2693, DBL 8230.10, DBL 7382.20, DBL 7392.10, DBL 8451.15, MBN 10435,

The technical documentation of the product is stored at the manufacturer's plant. Representative for compilation of the technical documentation: Director of the Technical Department Brano a.s.

4.

Hradec nad Moravicí

City

5.

14/03/2022

Date

Dipl. Engineer Michal Koberský

[Signature]

Director SBU-CJ

UKCA Declaration of Conformity

Copy and translation of the original Declaration of Conformity:

UK Declaration of Conformity

1.

The signatory, as a representative

Manufacturer:

BRANO a.s.

74741 Hradec nad Moravicí, Opavská 1000, Czech Republic

ID No.: 64-387-5933

VAT Reg. No.: CZ64-387-5933

declares, as our sole responsibility, that the product:

2. a)

Description:

Jack

Type, number:

A) A 164 580 02 18, A 166 580 01 18

B) A 240 580 00 18

C) A 639 580 02 18

D) A 639 580 03 18

E) A 910 580 00 00

F) A 247 580 00 00, A 293 580 00 00

G) A 247 580 02 00, A 293 580 02 00

Manufacture year: 2022

Fulfils all relevant conditions

Supply of Machinery (Safety) Regulations 2008

b)

Description and intended use:

The sole intended use of the jack is raising the specified vehicle in accordance with the operating instructions affixed to the jack.

3.

Reference data of the harmonised standards or specifications

ISO 4063, EN ISO 14341-A, DBL 8230.10, DBL 7382.20, DBL 7392.10, DBL 8451.15, MBN 10435,

The technical documentation of the product is stored at the manufacturer's plant. Representative for compilation of the technical documentation: Director of the Technical Department Brano a.s.

4. Hradec nad Moravicí	5. 04/07/2022	[Signature] Dipl. Engineer Michal Koberský
City	Date	Director SBU-CJ

TIREFIT kit

For EU and EFTA countries only:

Copy and translation of the original declaration of conformity:

EU Declaration of Conformity CE

We,

Aircom Automotive Sp. z o.o. Sp.k.

ul. Fabryczna 20B

55-080 Pietrzykowice

Poland (1)

Hereby declare that the product

Electric air pump (2)

Models: (3)

A0005838505	A0005839205

complies with all essential requirements of the directives listed opposite (4)

2006/42/EC (EC Machinery Directive)

2014/30/EU (EC EMC Directive)

2000/14/EG & 2005/88/EG (EC noise emissions)

2011/65/EU & 2015/863/EU (RoHS)

Authorised person for the compilation of technical documentation according to Annex VII A of Directive 2006/42/EC

Aircom Automotive Sp. z o.o. Sp.k.

Dominik Gschwender (5)

ul. Fabryczna 20B

55-080 Pietrzykowice

Poland

Applied harmonised standards (6)

DIN EN 60204-1: 2019-06

DIN EN 60335-1: 2020-08

DIN EN 1012-1: 2011-02

DIN EN 55012: 2010-04

DIN EN 50498: 2011-04

EN 50498:2010

DIN EN ISO 12100:2011-03

DIN EN ISO 3744:2011-02

DIN EN ISO 2151:2009-01

DIN EN ISO 4871:2009-11

DIN EN ISO 13732-1:2008-12

Other technical standards and specifications applied

None (7)

Pietrzykowice, 06.07.2021

[Signature, D. Gschwender]

Dominik Gschwender, general management

Note: this declaration loses its validity if technical or operational changes are made without the consent of the manufacturer.

For the United Kingdom only:
Copy and translation of the original declaration of conformity:

UKCA - Declaration of conformity UKCA

We,

Aircom Automotive Sp. z o.o. Sp.k.

ul. Fabryczna 20B

55-080 Pietrzykowice

Poland

Herby declare that the product model:

Electric air compressor

A0005838505	A0005839205

Is in conformity with the requirements of following regulations:

Supply of Machinery (safety) Regulations 2008

Electromagnetic Compatibility Regulations 2016

Noise Emission in the Environment by Equipment for use Outdoors Regulations 2001

The Restriction of the Use of Certain Hazardous Substances in Electrical and Electronic Equipment Regulations 2012

Ref. No.	Title	Edition/date
EN 60204-1	Safety of machinery – Electrical equipment of machines	2019-06
EN 60335-1	Household and similar electrical appliances	2020-08

Ref. No.	Title	Edition/date
EN 1012-1	Vehicles, boats and internal combustion engines – Radio disturbance characteristics	2011-02
EN 50498	Electromagnetic compatibility (EMC) – Product family standard for aftermarket electronic equipment in vehicles	2011-04
EN ISO 12100	Safety of machinery – General principles for design	2011-03

Ref. No.	Title	Edition/date
EN ISO 3744	Acoustics – Determination of sound power levels and sound energy levels of noise sources using sound pressure	2011-02
EN ISO 2151	Acoustics – Noise test code for compressors and vacuum pumps	2009-01

Ref. No.	Title	Edition/date
EN ISO 4871	Acoustics – Declaration and verification of noise emission values of machinery and equipment (ISO 4871:1996)	2009-11
EN ISO 13732-1	Ergonomics of the thermal environment – Methods for the assessment of human responses to contact with surface	2008-12

I hereby declare that the equipment named above has been designed to comply with the relevant sections of the above referenced specifications and is in accordance with the requirements of the Regulations

Aircom Automotive Sp. z o.o. Sp.k. ul. Fabryczna 20B 55-080 Pietrzykowice Poland	[signature D. Gschwender]
Date and location 06.07.2021, Pietrzykowice	Dominik Gschwender, Chief Executive Officer

Note: This declaration loses its validity if technical or operational changes are made without the consent of the manufacturer.

UK Importers Names and Address:

Mercedes-Benz Parts Logistics UK Limited

Delaware Drive

Tongwell

Milton Keynes

MK15 8BA

Diagnostics connection

The diagnostics connection is a technical interface in the vehicle. It is used, for example, during repair and maintenance work or for reading out vehicle data in a specialist workshop. Diagnostic devices should therefore be connected only at a qualified specialist workshop.

WARNING Risk of accident due to connecting devices to the diagnostics connection

If you connect devices to the diagnostics connection of the vehicle, the function of vehicle systems and operating safety may be impaired.

▶ For safety reasons, we recommend that you only use and connect products approved by a Mercedes-Benz service centre.

WARNING Risk of accident due to objects in the driver's footwell

Objects in the driver's footwell may impede pedal travel or block a depressed pedal.

This jeopardises the operating and road safety of the vehicle.

- Stow all objects in the vehicle securely so that they cannot get into the driver's footwell.
- Always fit the floor mats securely and as prescribed in order to ensure that there is always sufficient room for the pedals.
- Do not use loose floor mats and do not place floor mats on top of one another.

NOTE Battery discharging from using devices connected to the diagnostics connection

Using devices at the diagnostics connection drains the battery.

- Check the charge level of the battery.
- If the charge level is low, charge the battery, e.g. by driving a considerable distance.

Please also note the information about the 12 V battery and short-distance trips in the "Driving and Parking" chapter (→ page 238).

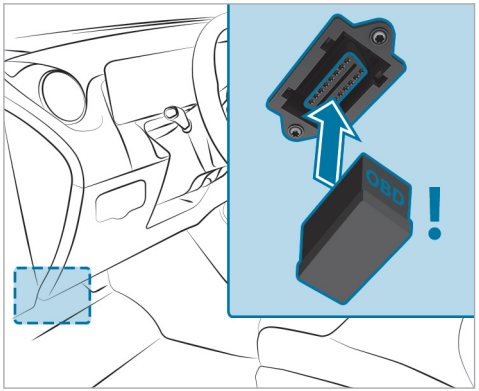

Connecting and using another device with the diagnostics connection can have the following effects:

- Malfunctions in the vehicle system
- Permanent damage to vehicle components

Please refer to the warranty terms and conditions for this matter.

Moreover, connecting equipment to the diagnostics connection can lead to emissions monitoring information being reset, for example. This may lead to the vehicle failing to meet the requirements of the next emissions inspection during the main inspection.

Qualified specialist workshop

A qualified specialist workshop has the necessary special skills, tools and qualifications to correctly carry out any necessary work on your vehicle. This particularly applies to safety-relevant work.

Always have the following work carried out on your vehicle at a qualified specialist workshop:

- Safety-relevant work

- Service and maintenance work
- Repair work
- Modifications as well as installations and conversions
- Work on electronic components
- **Plug-in hybrid:** work on the hybrid system
- **Vehicles with 48 V on-board electrical system:** work on the high-voltage component of the 48 V on-board electrical system

Mercedes-Benz recommends a Mercedes-Benz service centre.

Vehicle registration

Mercedes-Benz may ask its service centres to carry out technical inspections on certain vehicles. The quality or safety of the vehicle is improved as a result of the inspection.

Mercedes-Benz can only inform you about vehicle checks if Mercedes-Benz has your registration data.

It is possible that your vehicle has not yet been registered in your name in the following cases:

- if your vehicle was not purchased at an authorised specialist dealer.
- if your vehicle has not yet been examined at a Mercedes-Benz service centre.

It is advisable to register your vehicle with a Mercedes-Benz service centre.

Inform Mercedes-Benz as soon as possible about any change in address or vehicle ownership. You can do this at a Mercedes-Benz service centre, for example.

Correct use of the vehicle

If you remove any warning stickers, you or others could fail to recognise certain dangers. Leave warning stickers in position.

Observe the following information in particular when driving your vehicle:

- the safety notes in this Owner's Manual, vehicle-specific supplements and further supplementary documents
- technical data for the vehicle
- Traffic rules and -regulations of the country you are currently in
- Motor vehicle laws and safety standards of the country you are currently in
- Radio regulatory requirements of the country you are currently in

REACH regulation

For EU and EFTA countries only:

The REACH Regulation (Regulation (EC) No. 1907/2006, Article 33) stipulates a duty to supply information about substances of very high concern (SVHCs).

Mercedes-Benz AG acts to the best of its knowledge to prevent these SVHCs from being used and to enable customers to safely handle these substances. According to supplier information and internal product information, there are SVHCs known to Mercedes-Benz AG that are found in individual components of this vehicle in quantities of over 0.1 percent by weight.

Further information can be obtained at the following addresses:

- https://reach.mercedes-benz.com/de/home/
- https://reach.mercedes-benz.com/en/home/

Notes for persons with electronic medical aids

Mercedes-Benz AG cannot, despite carefully developing vehicle systems, completely rule out the interaction of vehicle systems with electronic medical aids such as cardiac pacemakers.

In addition, there are components installed in the vehicle that, regardless of the operating status of the vehicle, can generate magnetic fields on a par with permanent magnets. These fields can be found, for example, in the area around the multimedia and sound system or also in the area of the seats, depending on the vehicle equipment.

For this reason, the following can occur in isolated cases, depending on the aids used:

- Medical aids malfunctioning
- Adverse health effects

Observe the notes and warnings of the manufacturer of the medical aids; if in doubt, contact the device manufacturer and/or your doctor. If there is continuing uncertainty concerning the possibility of medical aids malfunctioning, Mercedes-Benz AG recommends using only few electrical vehicle systems and/or maintaining a distance from the components.

Plug-in hybrid

When charging the high-voltage battery, keep a distance of at least an arm's length between the medical aid and the following components:

- the power supply equipment

  This includes charging stations in the form of a wallbox or a public charging point, for example.
- vehicle components carrying live voltage

  This includes the charging cable and the charging control box, for example.

Only have repairs and maintenance work in the area of the following components carried out at a qualified specialist workshop:

- vehicle components carrying live voltage
- transmission aerials
- multimedia system and sound system

If you have any queries or suggestions, consult a qualified specialist workshop.

Implied warranty

! **NOTE** Damage to the vehicle arising from violation of these operating instructions.

Damage to the vehicle can arise from violation of these operating instructions.

This damage is not covered either by the Mercedes-Benz implied warranty or by the New- or Used-Vehicle Warranty.

▶ Follow the instructions in these operating instructions on proper operation of your vehicle as well as on possible vehicle damage.

QR code for rescue card

QR codes are attached in the fuel filler flap and on the opposite side on the B-pillar. In the event of an accident, rescue services can use the QR code to quickly find the appropriate rescue card for your vehicle. The current rescue card contains the most important information about your vehicle (e.g. the routing of the electric lines) in compact form.

Further information can be obtained at https://www.mercedes-benz.de/qr-code

Data storage

Data processing in the vehicle

Electronic control units

Electronic control units are fitted in your vehicle. Control units process data they receive, generate themselves or exchange with each other, forexample from vehicle sensors. Some control units are required for the safe operation of your vehicle. For example, some assist you when driving, suchas driver assistance systems, while others enable convenience or infotainment functions.

The following section provides general information about data processing in the vehicle. Additional information regarding which vehicle data is collected, saved and transmitted to third parties and for what purpose can be found in the information directly related to the relevant functional characteristics in the respective Owner's Manual. This information is available online and digitally, depending on the vehicle's equipment.

Personal data

A unique vehicle identification number identifies every vehicle. Depending on the country, this vehicle identification number can also be used to determine the identity of the vehicle keeper, e.g.by the authorities. There are also other ways of tracing data collected from the vehicle back to the keeper or driver, suchas the license plate number.

The data generated or processed by control units may therefore be attributable to a person or, in certain circumstance, become attributable to a person. Depending on which vehicle data are available, it may be possible to make inferences about, forexample, your driving behaviour, location, route or use patterns.

Legal requirements regarding the disclosure of data

If legally required to do so, manufacturers are generally obliged to provide the authorities with data stored by the manufacturer upon request and to the extent required. Forexample, this may be the case during the investigation of a criminal offence.

State authorities are themselves authorised to read out data from the vehicle in individual cases and within the applicable legal framework. In the case of an accident, information that can help with an investigation can be taken from the airbag control unit, forexample.

Operational data in the vehicle

To operate the vehicle, control units process data.

This includes the following data, forexample:

- Vehicle status information suchas the speed, longitudinal acceleration, lateral acceleration, number of wheel revolutions or the fastened seat belts display
- Ambient conditions, suchas temperature, rain sensor or distance sensor

Generally, this data is volatile and will not be stored beyond the period of operation and will only be processed within the vehicle itself. Control units, forexample, vehicle keys, often contain data memories. Their use permits the temporary or permanent documentation of technical information about the vehicle's operating state, component loads, maintenance requirements and technical events or faults.

Depending on the technical equipment, the following data are stored:

- Operating status of system components, suchas fill levels, tyre pressure or battery status
- Malfunctions or faults in important system components, suchas lights or brakes
- System reactions in special driving situations, suchas an airbag deployment or the intervention of stability control systems
- Information on events leading to vehicle damage

In certain cases, storing data that would have otherwise been temporary may be required. This may be the case if the vehicle has detected a malfunction, forexample.

If you make use of services, e.g.repair services, maintenance work,– the stored operating data can be read out and used together with the vehicle identification number – if necessary. Service network employees suchas workshops and manufacturers, and third parties suchas breakdown services can read out the data. The same is true in the event of warranty claims and quality assurance measures.

In general, the readout is performed via the legally prescribed port for the diagnostics connection in the vehicle. The selected operating data document the vehicle's or individual components' technical conditions, help with fault diagnosis, compliance with warranty obligations and quality improvement. To that end, these data, particularly information about component loads, technical events, malfunctions and other faults, may be transmitted to the manufacturer along with the vehicle identification number. Furthermore, the manufacturer is subject to product liability. For this reason, the manufacturer also uses operational data from the vehicle, e.g. for recalls. This data can also be used to review the customer's warranty and guarantee claims.

Fault memories in the vehicle can be reset by a service outlet or at your request as part of repair or maintenance work.

Convenience and infotainment functions

You can store the vehicle's convenience and individual settings and change or reset them at any time.

Depending on the vehicle equipment, this includes the following settings, forexample:

- Seat and steering wheel positions
- Suspension tuning and climate control settings
- Individual settings, suchas interior lighting

Depending on the selected equipment, you can import data into vehicle infotainment functions yourself.

Depending on the vehicle equipment, this includes the following data, forexample:

- Multimedia data, suchas music, films or photos for playback in an integrated multimedia system
- Address book data for use in connection with an integrated hands-free system or an integrated navigation system
- Entered navigation destinations
- Data about the use of Internet services

This data for convenience and infotainment functions may be saved locally in the vehicle or on a device connected to the vehicle, suchas a smartphone, USB flash drive or MP3 player. If you have entered this data yourself, you can delete it at any time.

This data is transmitted only from the vehicle to third parties at your request. This applies in particular when you use online services per your selected settings.

Smartphone integration (e.g. Android Auto or Apple CarPlay®)

If your vehicle is equipped accordingly, you can connect your smartphone or another mobile end device to the vehicle. You can then control them using the control elements integrated into the vehicle. Images and audio from the smartphone can be output via the multimedia system. Certain information is simultaneously transferred to your smartphone. Depending on the type of integration, thisincludes position data, day/night mode and other general vehicle statuses. For more information, please consult the vehicle Owner's Manual/infotainment system.

This integration allows the use of selected smartphone apps, suchas navigation or music player apps. There is no further interaction between the smartphone and the vehicle; in particular, vehicle data is not directly accessible. The type of additional data processing is determined by the provider of the app being used. The settings you can make, if any, depend on the specific app and your smartphone's operating system.

Online services

Wireless network connection

If your vehicle has a wireless network connection, it enables data to be exchanged between your vehicle and additional systems. The wireless network connection is made possible by the vehicle's own transmitter and receiver or by a mobile end device that you have brought into the vehicle, forexample, a smartphone. Online functions can be used via the wireless network connection. This includes online services and applications/apps provided to you by the manufacturer or by other providers.

Manufacturer's services

Regarding the manufacturer's online services, the individual functions are described by the manufacturer in a suitable place, forexample, in the Owner's Manual or on the manufacturer's website, where the relevant data protection information is also given. Personal data may be used for the provision of online services. Data are exchanged via a secure connection, suchas the manufacturer's designated IT systems. Any personal data which are collected, processed and

used, other than for the provision of services, is done so exclusively on the basis of legal permission. This is the case, forexample, for a legally prescribed emergency call system, a contractual agreement or when consent has been given.

You can have services and functions, some of which are subject to a fee, activated or deactivated. This excludes legally prescribed functions and services, suchas an emergency call system.

Third party services

If you use online services from other providers (third parties), these services are the responsibility of the provider in question and subject to that provider's data protection conditions and terms of use. As a general rule, the manufacturer has no influence on the content exchanged.

For this reason, when services are provided by third parties, please ask the service provider in question for information about the type, extent and purpose of the collection and use of personal data.

Data protection rights

Depending on your country or the equipment and range of functions of your vehicle as well as the services you use and the services on offer, you are entitled to different data protection rights. Further information on data protection and your data protection rights can either be found on the manufacturer's website or you will receive this information as part of the various services and service offers. There you will also find the contact information for the manufacturer and its data protection officers.

At a workshop, forexample, with the support of a specialist and possibly for a fee, you can have data read out which is stored only locally in the vehicle.

Copyright

Information on licences for free and open-source software used in your vehicle can be found on the data carrier in your vehicle document wallet and with updates on the following website:

https://www.mercedes-benz.com/opensource

Brief overview of most important points

Basic information

Make sure that the following prerequisites in particular have been met so that the components of the restraint system are able to provide the intended level of protection:

- Sit correctly (→ page 99).
- Fasten the seat belt correctly (→ page 100).
  - Function of the seat belt warning lamp (→ page 102).
  - Function of the rear seat belt status display (→ page 102).
- The restraint system warning lamp has gone out after the self-test (→ page 101).
- The PASSENGER AIR BAG indicator lamps display the correct status of the front passenger airbag (→ page 103).

For clear understanding
The chapter "Occupant safety" includes information on equipment, functions and behaviours that contribute directly to safety of vehicle occupants.

The information is structured as follows:

- **The most important information in brief:** in this chapter, you are provided with an overview of the relationship between the restraint system and the correct behaviour of all vehicle occupants.
- **Specific information:** in further sections of the chapter "Occupant safety", you can find specific information on the equipment and functions of the restraint system.
- **Keyword directory:** you can also find certain subjects in this Owner's Manual using the keyword directory.

Information on the following subjects, among others, are not provided in the chapter "Occupant safety":

- Children in the vehicle (→ page 115)
- Driving and driving safety systems (→ page 302)
- Stowage areas (→ page 183)

Defining generic terms clearly

In this Owner's Manual, the following generic terms are used:

- **Occupant safety:** comprises the components and system functions which help to minimise, as much as possible, the stresses on and consequences for vehicle occupants during an accident.
- **Restraint system:** comprises those components which, along with the vehicle structure, help prevent vehicle occupants from potentially coming into contact with parts of the vehicle interior. The seat belts and airbags, for example, are components of the restraint system.
- **Child restraint system:** you can find all information on this subject in the chapter "Children in the vehicle" (→ page 115).

Be diligent
For the components of the restraint system to provide the intended level of protection, it is essential that your posture is correct and that the seat belt is correctly fastened.

Bear in mind that negligence when adjusting your sitting position and fastening the seat belt may have serious consequences. Be diligent and make sure that all vehicle occupants are sitting correctly and have fastened their seat belts properly before starting every journey (→ page 99).

Information on the correct seat position

The seat position must be correct in order for the components of the restraint system to provide the intended level of protection.

The seat position influences both the protection provided by the seat belt and the additional protection provided by the airbag.

A correct seat position in which the seat is nearly perfectly upright and a correctly fastened seat belt reduce the risks posed by the airbag when it is deployed.

Keep space considerations in mind when choosing a seat. With the seat in the correct, nearly upright position, your head should not touch the roof.

⚠ WARNING Risk of injury or death due to an incorrect seat position

If you deviate from the correct seat position, the airbag cannot provide its intended protective function.

Each vehicle occupant must make sure of the following.

- ▶ Put the seat in the correct position.
- ▶ Fasten seat belts correctly. Pregnant women must take particular care to ensure that the lap belt never lies across the abdomen.
- ▶ Observe the following information.

In order for the restraint system to provide the intended level of protection, observe the following information:

- Before starting your journey, adjust your seat correctly (→ page 164).

  When doing so, make sure you are able to fasten your seat belt correctly. The shoulder belt strap must be routed forward from the seat belt outlet over the centre of your shoulder.

- Keep your distance from the airbags, especially the front airbags. Set the driver's seat and front passenger seat as far back as possible while making sure the seat belt is fastened correctly.
- If persons are sitting on the rear seats, vehicle occupants should maintain an sufficient distance to the parts of the vehicle interior in front of them.
- Make sure there are no people, animals or objects between the vehicle occupants and an airbag.
- If you are the driver, observe the following information on the correct position of the driver's seat (→ page 164).

  Only hold the steering wheel by the steering wheel rim. This allows the driver's airbag to fully deploy.
- Assume a nearly upright sitting posture, with your buttocks positioned as far back as possible in the gap between the seat cushion and the seat backrest.

  Your back must lie as flatly and as firmly as possible against the seat backrest.

- While driving, do not lean forward and do not lean against the door or side window. You may otherwise be in the deployment area of the airbags.
- Sit with their feet resting on the floor, if possible. Your thighs are slightly supported by the seat cushion

  Do not put your feet on the cockpit, for example. Your feet may otherwise be in the deployment area of the airbag.
- Fasten the seat belt correctly (→ page 100).

Notes on wearing the seat belt correctly

Always fasten your seat belt correctly before starting a journey. A seat belt can only provide the best level of protection if it is worn correctly.

⚠ WARNING Risk of injury or death due to incorrectly fastened seat belt

If the seat belt is not worn correctly, it cannot perform its intended protective function.

In addition, an incorrectly fastened seat belt can also cause injuries, for example, in the event of an accident or when braking or changing direction suddenly.

▶ Always ensure that all vehicle occupants have their seat belts fastened correctly and are sitting properly.

⚠ WARNING Risk of injury or death when additional restraint systems are not used for persons with a smaller stature

Persons under 1.50 m tall cannot wear the seat belt correctly without a suitable additional restraint system.

▶ Always secure persons under 1.50 m tall in a suitable restraint system.

Observe the following information on the correct seat position and posture (→ page 99).

Each vehicle occupant must observe the following notes in particular:

- The seat belt must not be twisted.
- The shoulder belt strap must be routed forward from the seat belt outlet over the centre of your shoulder.
- The shoulder belt strap should neither touch your neck nor be routed under your arm or behind your back.
- The lap belt must be routed as low down across the hips as possible.

  In addition, push the lap belt down as far as possible across your hips and pull tight with the shoulder belt strap. Never route the lap belt across your abdomen.

  Pregnant women must also take particular care with this.
- After being tightened, the shoulder belt strap and lap belt must fit snugly against the body.
- Avoid wearing bulky clothing, e.g. a winter coat.
- Never route the seat belt across sharp, pointed, abrasive or fragile objects.
- Only one person should use each seat belt at any one time.

- Never secure objects with a seat belt if the seat belt is also being used by one of the vehicle's occupants.

  Also ensure that no objects, e.g. a cushion, are ever placed between a person and the seat.

If you are driving with a child in the vehicle, observe the information in the chapter "Children in the vehicle" (→ page 115)

Observe the instructions for loading the vehicle when securing objects, luggage or loads (→ page 183).

Fastening seat belts

If the seat belt is pulled quickly or sharply, the seat belt retractor locks. The seat belt strap cannot be pulled out any further.

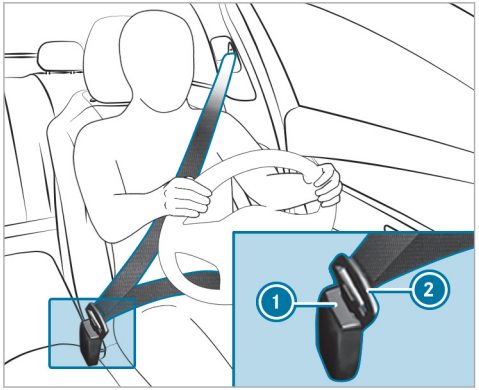

▶ Always engage seat belt tongue ② of the seat belt into seat belt buckle ① of the corresponding seat.

! **NOTE** Deployment of components of the restraint system when the front passenger seat is unoccupied and a seat belt is buckled

When the front passenger seat is unoccupied and the seat belt tongue of the seat belt is engaged in the seat belt buckle, components of the restraint system may deploy unnecessarily on the front passenger side, e.g. the seat belt tensioner.

▶ Only buckle the seat belts as intended.

Function of the restraint system warning lamp

When the vehicle is switched on, a self-test is performed, during which the restraint system warning lamp lights up. It goes out no later than a few seconds after the vehicle is started. The components of the restraint system are then functional.

A malfunction has occurred in the restraint system if:

- the [ ] restraint system warning lamp does not light up or is lit continuously when the vehicle is switched on
- the [ ] restraint system warning lamp lights up continuously or repeatedly during a journey

If components of the restraint system have been deployed, the [ ] restraint system warning lamp lights up continuously.

WARNING Risk of injury due to malfunctions in the restraint system

Components in the restraint system may be activated unintentionally or not deploy as intended in an accident.

▶ Have the restraint system checked and repaired immediately at a qualified specialist workshop.

Plug-in hybrid: if the restraint system is malfunctioning, the automatic high voltage emergency shutoff may not function.

DANGER Risk of fatal injury due to malfunctioning automatic high-voltage emergency shutoff

In the event of an accident, the high-voltage on-board electrical system may not be deactivated as intended.

You may receive an electric shock if you touch the damaged components of the high-voltage on-board electrical system.

▶ Have the automatic high-voltage emergency shutoff checked and repaired immediately at a qualified specialist workshop.

▶ After an accident, switch off the vehicle immediately.

Mercedes-Benz recommends that you have the vehicle towed to a qualified specialist workshop.

Function of the seat belt warning lamp

The [ ] seat belt warning lamp in the Instrument Display is a reminder that all vehicle occupants must wear their seat belts correctly.

In addition, a warning tone may sound.

As soon as the driver and front passenger fasten their seat belts, the seat belt warning goes out.

Function of the rear seat belt status display

The rear seat belt status display is only available for certain countries.

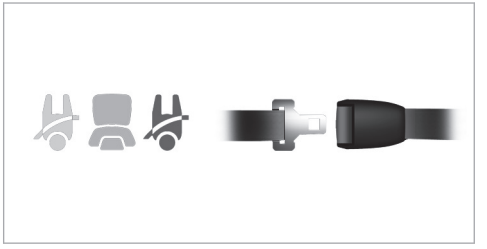

When the vehicle is switched on, the rear seat belt status display informs you for a certain amount of time which rear seat belt is not fastened.

The status of the rear seat belt can be recognised by the colour of the symbol in the driver's display:

- Grey: the seat belt tongue of a rear seat belt is not engaged in the seat belt buckle of the corresponding seat.
- Green: the seat belt tongue of a rear seat belt is engaged in the seat belt buckle of the corresponding seat.

  Every vehicle occupant must always fasten their seat belt correctly before starting a journey.
- Red: a vehicle occupant in the rear passenger compartment has released the seat belt buckle using the release button and may not be properly secured.

If a vehicle occupant unfastens a seat belt in the rear, the rear seat belt status display appears again.

In addition, a warning tone may sound.

Function of the PASSENGER AIR BAG indicator lamps (front passenger airbag)

Vehicles without automatic front passenger airbag shutoff have a special sticker affixed to the side of the cockpit on the front passenger side (→ page 122).

The PASSENGER AIR BAG indicator lamps display the status of the front passenger airbag.

If the front passenger seat is occupied or a child restraint system is fitted on the front passenger seat, you must make sure both before, and also during the journey, that the status of the front passenger airbag is correct for the situation.

WARNING Risk of potentially fatal injuries due to objects trapped under the front passenger seat

Objects trapped under the front passenger seat may interfere with the function of the automatic front passenger airbag shutoff or damage the system.

- ▶ Do not stow any objects under the front passenger seat.
- ▶ When the front passenger seat is occupied, ensure that no objects have become trapped beneath the front passenger seat.

Self-test: when the vehicle is switched on, both the PASSENGER AIR BAG ON and OFF indicator lamps light up simultaneously for several seconds.

After the self-test, you can determine the status of the front passenger airbag as follows:

- **Front passenger airbag disabled:** PASSENGER AIR BAG OFF lights up continuously.

  The front passenger airbag will not be deployed in the event of an accident. If PASSENGER AIR BAG OFF is lit, no one may use the front passenger seat.

  If a rearward-facing child restraint system is fitted on the front passenger seat, PASSENGER AIR BAG OFF must be lit continuously.
- **Front passenger airbag enabled:** PASSENGER AIR BAG ON lights up for up to 60 seconds or until both the PASSENGER AIR BAG ON and OFF indicator lamps go out.

  The front passenger airbag may be deployed during an accident. If the front passenger airbag is in this status, no rearward-facing child restraint system may be fitted on the front passenger seat.

ⓘ If you are driving with a child in the vehicle, observe the information in the chapter "Children in the vehicle" (→ page 115)

WARNING Risk of injury or death due to a disabled front passenger airbag

The front passenger airbag is disabled when the PASSENGER AIR BAG OFF indicator lamp is lit.

A person in the front passenger seat could then, for example, come into contact with the vehicle interior, especially if the person is sitting too close to the cockpit.

If the front passenger seat is occupied, always ensure that:

- the classification of the person in the front passenger seat is correct and the front passenger airbag is enabled or disabled in accordance with the person in the front passenger seat.
- the front passenger seat has been moved as far back as possible.
- the person is seated correctly.

▶ Both before and during the journey, ensure that the status of the front passenger airbag is correct.

Malfunction of the automatic front passenger airbag shutoff

The PASSENGER AIR BAG OFF indicator lamp and the restraint system indicator lamp light up simultaneously.

In this case, no one may use the front passenger seat and no child restraint system may be fitted on the front passenger seat.

Have the automatic front passenger airbag shutoff checked and repaired immediately at a qualified specialist workshop.

Disabling or enabling the front passenger airbag

The automatic front passenger airbag shutoff can disable or enable the front passenger airbag according to the situation.

This happens automatically as a result of the classification of the person or child restraint system on the front passenger seat.

You cannot manually disable or enable the front passenger airbag.

Information on the child restraint system

When fitting a child restraint system, observe the notes in "Children in the vehicle" (→ page 115).

Notes on the child restraint system on the front passenger seat

WARNING Risk of injury or death due to an enabled co-driver airbag

If the co-driver airbag is enabled, a child on the co-driver seat may be struck by the co-driver airbag during an accident.

▶ NEVER use a rearward-facing child restraint system on a seat with an ENABLED FRONT AIRBAG. DEATH or SERIOUS INJURY to the CHILD can occur.

Also pay particular attention to the notes on rearward-facing or forward-facing child restraint systems on the front passenger seat (→ page 120).

Information on the automatic functions of the restraint system

Function of the automatic front passenger airbag shutoff

A person on the front passenger seat must observe the following information:

- Sit correctly (→ page 99).
- Fasten the seat belt correctly (→ page 100).

The automatic front passenger airbag shutoff can disable or enable the front passenger airbag according to the situation.

Make sure you observe the following information:

- The status of the front passenger airbag, see "Function of the PASSENGER AIR BAG indicator lamps"(→ page 103).
- When fitting a child restraint system to the front passenger seat, observe the vehicle-specific information (→ page 120).

Status of the front passenger airbag in relation to the stature of the person:

- **Front passenger airbag disabled:** PASSENGER AIR BAG OFF lights up continuously.

The front passenger airbag will not be deployed in the event of an accident. If PASSENGER AIR BAG OFF is lit, no one may use the front passenger seat.

- **Front passenger airbag enabled:** PASSENGER AIR BAG ON lights up for up to 60 seconds or until both the PASSENGER AIR BAG ON and OFF indicator lamps go out.

  The front passenger airbag may be deployed during an accident. Observe the following information on the correct seat position (→ page 99).

  Vehicles with rear seats: a person of smaller stature should use a rear seat.

System limits

The front passenger airbag may otherwise be disabled by mistake, for example, in the following situation:

- The front passenger transfers their weight by supporting themselves on a vehicle armrest.
- The front passenger sits in such a way that their weight is raised from the seat surface.

! NOTE Deployment of components of the restraint system when the front passenger seat is unoccupied

In an accident, the components of the restraint system may deploy unnecessarily on the front passenger side if:

- There are heavy objects on the front passenger seat.
- The seat belt tongue is engaged in the seat belt buckle of the front passenger seat and the front passenger seat is unoccupied.

▶ Stow objects in a suitable place.

▶ Only one person should use each seat belt at any one time.

Depending on the detected accident situation, the window airbag on the front passenger side may deploy. The airbag is deployed regardless of whether the front passenger seat is occupied.

Function of PRE-SAFE® (anticipatory occupant protection)

PRE-SAFE® is able to detect certain critical driving situations and implement pre-emptive measures to protect the vehicle occupants.

PRE-SAFE® can implement the following measures independently of each other:

- Tightening the seat belts on the driver's seat and front passenger seat.
- Closing the side windows.
- **Vehicles with sliding sunroof:** closing the sliding sunroof.
- **Vehicles with memory function:** moving the front passenger seat to a more favourable seat position.
- **PRE-SAFE® Sound:** provided that the multimedia system is switched on, generating a brief noise signal to stimulate the innate protective mechanism of a person's hearing.

NOTE Damage caused by objects in the footwell or behind the seat

The automatic adjustment of the seat position may result in damage to the seat and/or the object.

▶ Stow objects in a suitable place.

Reversing the PRE-SAFE® system measures

If an accident did not occur, the pre-emptive measures that were taken are reversed.

You will need to perform certain settings yourself.

▶ If the seat belt pre-tensioning is not reduced, move the seat backrest slightly backwards. The seat belt pre-tensioning releases.

Seat belt adjustment function

Vehicles with PRE-SAFE®: after you have fastened the seat belt of the front seat, it may adjust itself against your body by pulling at the shoulder until somewhat tight. Do not hold the seat belt tightly while it is adjusting.

This function is a reminder that all vehicle occupants must wear their seat belts correctly.

You can activate and deactivate the seat belt adjustment function using the multimedia system (→ page 107).

Activating/deactivating seat belt adjustment via the multimedia system

Multimedia system:

⮌ ⌂ ▸▸ Settings ▸▸ Vehicle ▸▸ Occupant protection

▶ Activate or deactivate Belt adjustment.

Overview of the automatic measures after an accident

Depending on the type and severity of the accident, and depending on the vehicle's equipment, the following measures can be implemented, for example:

- automatic braking (post-collision brake) (→ page 107)
- activating the hazard warning lights
- triggering an automatic emergency call (→ page 59)
- switching off the engine

  To start the vehicle again, switch the vehicle off and on once more (→ page 232). Depending on the type and severity of the accident, you may no longer be able to start the vehicle.
- switching off the fuel supply
- **Plug-in hybrid:** switching off the hybrid system and high-voltage on-board electrical system
- unlocking the vehicle doors
- lowering the side windows
- displaying the emergency guide in the central display (→ page 60)
- switching on the interior lighting

Function of the post-collision brake after an accident

Depending on the accident situation, the post-collision brake can minimise the severity of a further collision or even avoid it.

If an accident is detected, the post-collision brake can initiate automatic braking. When the vehicle has come to a standstill, the electric parking brake is automatically applied.

The driver can cancel automatic braking by taking the following actions:

- braking more strongly than automatic braking
- fully depressing the accelerator pedal with force

Purpose and function of the restraint system

Overview of deployment situations (restraint system)

In particular ensure the following conditions to enable the components of the restraint system to deploy their protective potential:

- Seat correctly (→ page 99).
- Fasten seat belts correctly (→ page 100).
  - Function of the seat belt warning lamp (→ page 102).
  - Function of the rear seat belt status display (→ page 102).
- The restraint system warning lamp [ ] does not light up after the self-check (→ page 101).
- The indicator lamps PASSENGER AIR BAG display the correct status of the front passenger airbag (→ page 103).

Depending on the detected deployment situation, the components of the restraint system can be activated or deployed independently of each other:

- Seat belt tensioner: frontal impact, rear impact, side impact, rollover[1]
- Driver's airbag, front passenger airbag: frontal impact
- Knee airbag: frontal impact
- Side airbag: side impact
- Window airbag: side impact, rollover[1], frontal impact

[1] Only for certain countries.

The installation location of an airbag is identified by the symbol AIRBAG (→ page 114).

Observe the information on how the restraint system works (→ page 108).

Information on how the restraint system works

How the restraint system functions depends on the severity of the impact detected and the apparent type of accident.

For more information about types of accidents, see "Overview of deployment situations" (→ page 108).

The activation thresholds for the components of the restraint system are determined based on the evaluation of the sensor values measured at various points in the vehicle. This process is pre-emptive in nature. The triggering/deployment of the components of the restraint system must take place in good time at the start of the collision.

Factors which can only be seen and measured after a collision has occurred cannot play a decisive role in airbag deployment. Nor do they provide an indication of airbag deployment.

The vehicle may be deformed significantly without an airbag being deployed. This is the case if only parts which are relatively easily deformed are affected and the rate of vehicle deceleration is not high. Conversely, an airbag may be deployed even though the vehicle suffers only minor deformation. If very rigid vehicle parts such as longitudinal members are hit, this may result in sufficiently high levels of vehicle deceleration.

Depending on the apparent type of accident and the detected deployment situation, seat belt tensioners and/or airbags supplement the protection offered by a correctly worn seat belt.

When enabled, an airbag can provide additional protection for the respective vehicle occupant.

Potential protection provided by each airbag:

- Knee airbag: thigh, knee and lower leg
- Driver's airbag, front passenger airbag: head and ribcage
- Window airbag: head
- Side airbag: ribcage and pelvis

Vehicles with AMG Performance seat: the side airbag provides possible protection for the ribcage.

However, no system available today can completely eliminate injuries and fatalities in every accident situation. In particular, the seat belt and airbag generally do not protect against objects penetrating the vehicle from the outside. It is also not possible to completely rule out the risk of injury caused by the airbag deploying.

Mercedes-Benz recommends that you have the vehicle towed to a qualified specialist workshop after an accident. Take this into account, particularly if a seat belt tensioner is triggered or an airbag deployed.

If the seat belt tensioners are triggered or an airbag is deployed, you will hear a bang, and a small amount of powder may also be released:

- The bang will not generally affect your hearing.
- In general, the powder released is not hazardous to health but may cause short-term breathing difficulties to persons suffering from asthma or other pulmonary conditions.

  Provided it is safe to do so, leave the vehicle immediately or open the window in order to prevent breathing difficulties.

Information on the limited protection provided by the restraint system

Risk due to the incorrect behaviour of vehicle occupants

Every vehicle occupant must make sure of the following in particular:

- They observe the information on the correct seat position (→ page 99).
- There are no heavy, sharp-edged or fragile objects in the pockets of their clothing. Store such objects in a suitable place.

⚠ **WARNING** Risk of injury or death due to incorrect seat position

The seat belt will not offer the intended level of protection if you have not moved the seat backrest to an almost vertical position.

In particular, you may slip under the seatbelt and injure yourself.

▶ Adjust the seat properly before beginning your journey.

- Always ensure that the seat backrest is in an almost vertical position and that the shoulder section of your seat belt is routed across the centre of your shoulder.

Risk due to objects in the vehicle interior

Every vehicle occupant must make sure of the following in particular:

- They observe the information on the correct seat position (→ page 99).
- There are no objects between the seat, door and door pillar (B-pillar).
- There are no hard objects, e.g. coat hangers, hanging on the grab handles or coat hooks.
- There are no heavy, sharp-edged or fragile objects in the pockets of their clothing. Store such objects in a suitable place.

WARNING Risk of injury or death due to blocked seat belt buckle or seat belt anchorage

Objects next to the front seat that block the seat belt buckle or the moving seat belt anchorage on the front seat impair the function of the seat belt tensioners.

- Before starting the journey, make sure that there are no objects around the seat belt buckle or between the front seat and door.

WARNING Risk of injury from objects in the deployment area of an airbag

Objects in the deployment area of an airbag can hinder or prevent the correct deployment of the airbag.

The airbag may then deploy in an uncontrolled manner and may even cause additional injuries to the vehicle occupants by deploying. This may be the case in particular if the airbag is integrated into the seat.

- Always stow and secure objects correctly.
- Before commencing your journey, make sure that no objects are stowed in the deployment area of an airbag.

The installation location of an airbag is identified by the AIRBAG (→ page 114) symbol.

Risk due to fitting accessories

Do not attach accessories such as mobile navigation devices, mobile phones or cup holders, within the deployment area of an airbag, e.g. on the cockpit, on the door, on the side window or on the side trim.

In addition, no connecting cables, tensioning straps or retaining straps must be routed or attached to the vehicle within the deployment area of an airbag. Always comply with the accessory manufacturer's installation instructions and, in particular, the notes on suitable places for installation.

WARNING Risk of injury or death due to unsuitable protective covers

Due to unsuitable protective covers, the airbags cannot protect vehicle occupants as they are designed to do.

- You should only use protective covers that have been approved for the corresponding seat by Mercedes-Benz.

In addition, the function of the automatic front passenger airbag shutoff could be restricted due to an unsuitable protective cover. If the front passenger seat is occupied, ensure that the PASSENGER AIR BAG indicator lamps display the correct status of the front passenger airbag (→ page 103).

Risk due to pets in the vehicle interior

WARNING Risk of accident and injury due to animals left unsecured or unattended in the vehicle

If you leave animals in the vehicle unattended or unsecured, they could press buttons or switches, for instance.

An animal may:

- activate vehicle equipment and become trapped, for example
- switch systems on or off and endanger other road users

Unsecured animals may be thrown about the vehicle in the event of an accident, or sudden steering and braking manoeuvres, and injure vehicle occupants.

- Never leave animals unattended in the vehicle.
- Always correctly secure animals while driving, e.g. using a suitable animal carrier.

Risk due to modification, damage or wear to the components of the restraint system

WARNING Risk of injury or death due to modifications to the restraint system

Vehicle occupants may no longer be protected as intended if alterations are made to the restraint system.

- Never alter the parts of the restraint system.
- Never tamper with the wiring or any electronic component parts or their software.

If it is necessary to modify the vehicle to accommodate a person with disabilities, contact a qualified specialist workshop.

Mercedes-Benz recommends that you use driving aids which have been approved for your vehicle by Mercedes-Benz.

WARNING Risk of injury or death due to damaged or modified seat belts

Seat belts cannot provide protection in the following situations:

- the seat belt is damaged, has been modified, is extremely dirty, bleached or dyed
- the seat belt buckle is damaged or extremely dirty
- modifications have been made to the seat belt tensioner, seat belt anchorage or seat belt retractor

Seat belts may sustain non-visible damage in an accident, e.g. due to glass splinters.

Modified or damaged seat belts could tear or fail in the event of an accident, for example.

Modified seat belt tensioners could accidentally trigger or fail to function as intended.

▶ Never modify the seat belt system, for example the seat belt, seat belt buckle, seat belt tensioner, seat belt anchorage and seat belt retractor.

▶ Make sure that the seat belts are undamaged, not worn and clean.

▶ Always have the seat belts checked immediately after an accident at a qualified specialist workshop.

Mercedes-Benz recommends that you use seat belts which have been approved for your vehicle by Mercedes-Benz.
The seat is designed for the standard three-point seat belt. If you fit a different multipoint seat belt, for example a four-point seat belt, the restraint system cannot provide the intended level of protection.

Depending on the type of vehicle, there may be openings in the seat backrest. These openings have no function.

WARNING Risk of injury or fatal injury due to modified seat belt systems

If you feed seat belts through the opening in the seat backrest, the seat backrest may be damaged or may even break in the event of an accident.

▶ Only use the standard three-point seat belt.

▶ Never modify the seat belt system.

WARNING Risk of injury due to modifications to the cover of an airbag

If you modify the cover of an airbag or affix objects such as stickers to it, the airbag can no longer function as intended.

▶ Never modify the cover of an airbag.

▶ Do not attach any objects to the cover.

The installation location of an airbag is identified by the AIRBAG symbol (→ page 114).

WARNING Risk of injury due to malfunctioning sensors in the door

The function of the airbags can be impaired due to modifications or incorrect work performed on the doors or door trim, or if the doors are damaged.

- Never modify the doors or parts of the doors.
- Always have work on the doors or door trim carried out at a qualified specialist workshop.

Risk due to components of the restraint system which have already been deployed
Mercedes-Benz recommends that you have the vehicle towed to a qualified specialist workshop after an accident.

WARNING Risk of burns from hot airbag components

The airbag parts are hot after an airbag has been deployed.

- Do not touch the airbag parts.
- Have a deployed airbag replaced at a qualified specialist workshop as soon as possible.

WARNING Risk of injury due to deployed airbag

A deployed airbag no longer offers any protection.

- Have the vehicle towed to a qualified specialist workshop in order to have the deployed airbag replaced.

Have deployed airbags replaced immediately.

WARNING Risk of injury or death from deployed pyrotechnic seat belt tensioners

Pyrotechnic seat belt tensioners that have been deployed are no longer operational and are unable to perform their intended protective function.

- Therefore, have deployed pyrotechnic seat belt tensioners immediately replaced at a qualified specialist workshop.

Seat belts

Releasing the seat belts

- Press the release button in the seat belt buckle and guide the seat belt back with the seat belt tongue.

NOTE Damage caused by trapping the seat belt

If an unused seat belt is not fully retracted, it may become trapped in the door or in the seat mechanism.

- Always ensure that an unused seat belt is fully retracted.

Airbags

Overview of airbags

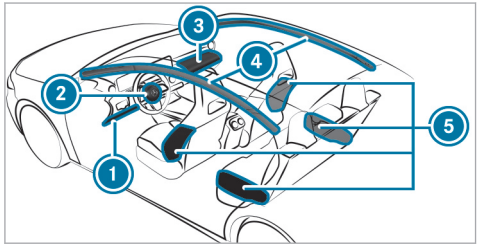

1. Knee airbag
2. Driver's airbag
3. Front passenger airbag
4. Window airbag
5. Side airbag

The installation location of an airbag is identified by the AIRBAG symbol.

Please observe the information under "Overview of deployment situations“ (→ page 108).

Brief overview of most important points

Safely transporting children in the vehicle

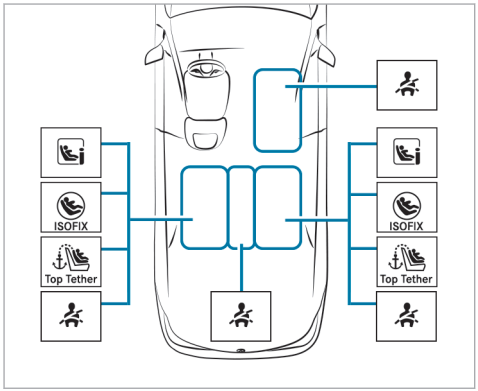

Always observe the following when transporting children:

- Never leave children unattended in the vehicle (→ page 117).
- Secure children up to a height of 1.50 m on the seat (see illustration above) properly with a suitable and approved child restraint system (→ page 122), and secure small children in a rearward-facing child restraint system.
- Observe the child restraint system manufacturer's installation instructions.

Left/right rear seat (preferred seats)

Preferred securing system:

LATCH-type (ISOFIX) securing rings (→ page 127)

or

i-Size securing rings (→ page 129)

and

Also secure Top Tether if present (→ page 134).

Alternative securing system:

Vehicle seat belt (→ page 136)

Additionally attach Top Tether if recommended by the manufacturer of the child restraint system (→ page 134).

The following child restraint systems within the Universal category are approved: U, UF, i-U, IUF. Observe the other alternatives for use (→ page 127).

Front passenger seat

Securing system:

Vehicle seat belt (→ page 136)

Be sure to observe:

- If the front passenger seat is occupied, ensure that the status of the front passenger airbag is correct for the current situation (→ page 103).

The following child restraint systems within the Universal category are approved: U(*), UF. Observe the other alternatives for use (→ page 129).

(*) rearward-facing child restraint systems only in combination with automatic airbag shutoff

Centre rear seat

Securing system:

Vehicle seat belt (→ page 136)

The following belt-secured child restraint systems within the Universal category are approved: U, UF. Observe the other alternatives for use (→ page 136).

Important safety notes

Basic information

Be diligent

Bear in mind that negligence when securing a child in the child restraint system may have serious consequences. Always be diligent in securing a child carefully before every journey.

Never allow babies and children to travel sitting on the lap of another vehicle occupant.

To improve protection for children younger than 12 years old or under 1.50 m in height, Mercedes-Benz recommends you observe the following information:

- Always secure the child in a child restraint system suitable for this Mercedes-Benz vehicle.
- The child restraint system must be appropriate to the age, weight and size of the child.
- The vehicle seat must be suitable for the child restraint system to be fitted:
  - LATCH-type (ISOFIX) securing rings: (→ page 127)
  - i-Size securing rings: (→ page 129)
  - Securing with the vehicle seat belt: (→ page 129)

Accident statistics show that children secured on the rear seats are generally safer than children secured on the front seats. For this reason, Mercedes-Benz strongly advises that you fit a child restraint system to a rear seat.

The generic term child restraint system

The generic term child restraint system is used in this Owner's Manual. A child restraint system is, for example:

- a baby car seat
- a rearward-facing child seat
- a forward-facing child seat
- a child booster seat – Mercedes-Benz recommends using a child booster seat **with** a backrest and seat belt guide

Observe laws and legal requirements

Always observe the legal requirements when using a child restraint system in the vehicle.

Make sure that the child restraint system is approved in accordance with the valid test specifications and guidelines. Further information can be obtained at a qualified specialist workshop. Mercedes-Benz recommends that you use a Mercedes-Benz Service Centre for this purpose.

Securing systems for child restraint systems in the vehicle

Only use the following securing systems for child restraint systems:

- the ISOFIX/LATCH or i-Size securing rings
- the vehicle's seat belt system
- the Top Tether anchorages

Simply attaching to the ISOFIX/LATCH securing rings or i-Size securing rings on the vehicle can reduce the risk of fitting the child restraint system incorrectly.

When securing a child with the integrated seat belt of the ISOFIX/LATCH or i-Size child restraint system, always comply with the permissible gross weight for the child and child restraint system (→ page 133).

Important warning notices

Always secure a child restraint system correctly

WARNING Risk of injury or death due to incorrect installation of the child restraint system

The child can then not be protected or restrained as intended.

- ▶ Be sure to comply with the manufacturer's installation instructions for the child restraint system and its correct use.
- ▶ Make sure that the entire base of the child restraint system always rests on the sitting surface of the seat.
- ▶ Never place objects (e.g. cushions) under or behind the child restraint system.
- ▶ Use child restraint systems only with the original cover designed for them.
- ▶ Always replace damaged covers with genuine covers.

- Always observe the vehicle-specific information.
  - Fitting an ISOFIX or i-Size child restraint system on the rear seat (→ page 133).
  - Securing the child restraint system with the seat belt (→ page 136).
- Observe the warning labels in the vehicle interior and on the child restraint system.

WARNING Risk of injury or death due to unsecured child restraint systems in the vehicle

If the child restraint system is incorrectly fitted or not secured, it can become detached.

The child cannot then be protected or restrained as intended.

The unused child restraint system can be become detached and strike vehicle occupants.

- ▶ Always comply with the manufacturer's installation instructions for the child restraint system and its correct use.

- Always fit child restraint systems correctly, even if they are transported unused in the vehicle.

Do not modify the child restraint system

WARNING Risk of injury due to modifications to the child restraint system

The child restraint system can no longer function properly. This poses an increased risk of injury.

- Never modify a child restraint system.
- Only affix accessories which have been specially approved for this child restraint system by the child restraint system's manufacturer.

Only use child restraint systems which are in proper working condition

WARNING Risk of injury or death caused by the use of damaged child restraint systems

Child restraint systems or their retaining systems that have been subjected to stress in an accident may not be able to perform their intended protective function.

It may be the case that the child cannot be properly restrained.

- Always immediately replace child restraint systems that have been damaged or involved in an accident.
- Have the securing systems for the child restraint systems checked at a qualified specialist workshop before installing a child restraint system again.

Avoid direct sunlight

WARNING Risk of burns when the child seat is exposed to direct sunlight

If the child restraint system is exposed to direct sunlight or heat, parts could heat up.

Children could suffer burns from these parts, particularly on metallic parts of the child restraint system.

- Always make sure that the child restraint system is not exposed to direct sunlight.
- Protect the child restraint system with a blanket, for example.
- If the child restraint system has been exposed to direct sunlight, allow it to cool before securing a child into it.
- Never leave children unattended in the vehicle.

Observe when stopping or parking

WARNING Risk of fatal injury due to exposure to extreme heat or cold in the vehicle

If persons, particularly children, are subjected to prolonged exposure to intense heat or cold, there is a risk of severe injury or even death.

▶ Never leave persons, particularly children, unattended in the vehicle.

WARNING Risk of accident- and injury due to children left unattended in the vehicle

When children are left unattended in the vehicle, they can be expected in particular to

- open doors, thereby endangering other persons or road users.
- get out and be struck by oncoming traffic.
- operate vehicle equipment and become trapped, for example.

In addition, the children could also set the vehicle in motion, for example by:

- releasing the parking brake.
- changing the drive range.
- starting the vehicle.

▶ Never leave children unattended in the vehicle.

▶ When leaving the vehicle, always take the key with you and lock the vehicle.

▶ Keep the key out of reach of children.

Overview of warning stickers in the vehicle

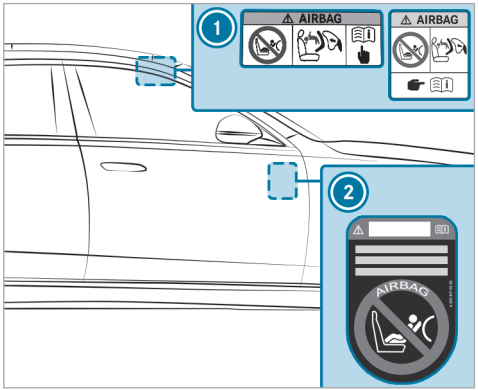

1. Front passenger airbag warning (on the front passenger sun visor) (→ page 120)
2. Vehicles without automatic front passenger airbag shutoff warning (visible when the front passenger door is open) (→ page 122)

Notes on rearward-facing and forward-facing child restraint systems on the front passenger seat

WARNING Risk of injury or death when using a rearward-facing child restraint system while the front passenger airbag is enabled

If you secure a child in a rearward-facing child restraint system on the front passenger seat and the PASSENGER AIR BAG OFF indicator lamp is off, the front passenger airbag can deploy in the event of an accident.

The child could be struck by the airbag.

- Always ensure that the front passenger airbag is disabled. The PASSENGER AIR BAG OFF indicator lamp must be lit.
- NEVER use a rearward-facing child restraint system on a seat with an ENABLED FRONT AIRBAG. This can result in the DEATH of or SERIOUS INJURY to the CHILD.

Observe the specific instructions for the rearward-facing and forward-facing child restraint systems (→ page 131).

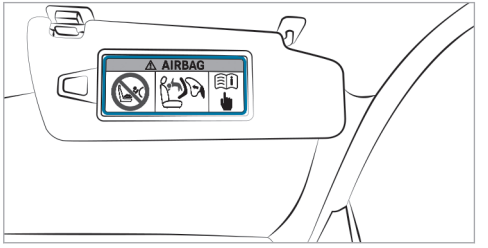

Warning notice on the front passenger sun visor

If it is absolutely necessary to install a child restraint system on the front passenger seat, always observe the additional notes.

- the notes on automatic front passenger airbag shutoff (→ page 104).
- When using a rearward-facing child restraint system on the front passenger seat, the front passenger airbag must always be disabled. This is only the case if the PASSENGER AIR BAG OFF indicator lamp is lit continuously (→ page 103).
- The front passenger airbag is enabled when the PASSENGER AIR BAG OFF indicator lamp is not lit. The front passenger airbag may be deployed during an accident. In that case, do not use rearward-facing child restraint systems.

Information on the automatic front passenger airbag shutoff

If the front passenger seat is occupied, ensure, both before and during the journey, that the status of the front passenger airbag is correct for the current situation.

WARNING Risk of injury or death due to objects between the seat surface and the child restraint system

Objects between the seat surface and the child restraint system could affect the function of the automatic co-driver airbag shutoff.

- Do not place any objects between the seat surface and the child restraint system.
- Make sure that the entire base of the child restraint system is always resting on the seat surface of the co-driver seat.
- The backrest of the forward-facing child restraint system must, as far as possible, be resting on the seat backrest of the co-driver seat.
- It is essential to comply with the child restraint system manufacturer's installation instructions.

When fitting a child restraint system to the front passenger seat, observe the vehicle-specific information (→ page 120).

Rearward-facing child restraint system on the front passenger seat

If a rearward-facing child restraint system is fitted on the front passenger seat, the front passenger airbag must be disabled. The PASSENGER AIR BAG OFF indicator lamp must light up continuously (→ page 103).

WARNING Risk of injury or death when using a rearward-facing child restraint system while the front passenger airbag is enabled

If you secure a child in a rearward-facing child restraint system on the front passenger seat and the PASSENGER AIR BAG OFF indicator lamp is off, the front passenger airbag can deploy in the event of an accident.

The child could be struck by the airbag.

- Always ensure that the front passenger airbag is disabled. The PASSENGER AIR BAG OFF indicator lamp must be lit.
- NEVER use a rearward-facing child restraint system on a seat with an ENABLED FRONT AIRBAG. This can result in the DEATH of or SERIOUS INJURY to the CHILD.

ⓘ The front passenger airbag is enabled depending on the child restraint system and the stature of the child. The PASSENGER AIR BAG OFF indicator lamp does not light up.

The front passenger airbag may be deployed during an accident. If the front passenger airbag is in this status, no rearward-facing child restraint system may be fitted on the front passenger seat.
Instead, fit the rearward-facing child restraint system to a suitable rear seat.

Forward-facing child restraint system on the front passenger seat

If a forward-facing child restraint system is fitted on the front passenger seat, the front passenger airbag may be automatically enabled or disabled. The status of the front passenger airbag depends on the child restraint system and the stature of the child.

The PASSENGER AIR BAG OFF indicator lamp is either lit continuously, or it is not lit (→ page 103). Always observe the following information.

WARNING Risk of injury or death caused by incorrect positioning of the child restraint system

If you secure a child in a forward-facing child restraint system on the front passenger seat and you position the front passenger seat too close to the cockpit, in the event of an accident, the child could:

- Come into contact with the vehicle interior if the PASSENGER AIR BAG OFF indicator lamp is lit, for example.
- Be struck by the airbag if the PASSENGER AIR BAG OFF indicator lamp is off.

▶ Always move the front passenger seat as far back as possible. In doing so, always make sure that the shoulder belt strap is correctly routed from the seat belt outlet of the vehicle to the shoulder belt guide on the child restraint system. The shoulder belt strap must be routed forwards and downwards from the seat belt outlet.

If necessary, adjust the passenger seat accordingly.

▶ Always comply with the child restraint system manufacturer's installation instructions.

Notes on vehicles without automatic front passenger airbag shutoff

Vehicles without automatic front passenger airbag shutoff have a special sticker affixed to the side of the cockpit on the front passenger side (→ page 119).

Make sure you observe the following information:

- Never fit a rearward-facing child restraint system to the front passenger seat
- Always fit a rearward-facing child restraint system to a suitable rear seat
- Notes on rearward-facing and forward-facing child restraint systems on the front passenger seat (→ page 120)

Suitable child restraint systems for the transport of children

Information on the advantage of a rearward-facing child restraint system

Transport a baby in a suitable rearward-facing child restraint system only. It is also preferable to transport a small child in a suitable rearward-facing child restraint system. In this case, the child sits in the opposite direction to the direction of travel and faces backwards.

Babies and small children have comparatively weak neck muscles in relation to the size and weight of their head. The risk of injury to the cervical spine during an accident can be reduced in a rearward-facing child restraint system.

Approval categories for child restraint systems

Only child restraint systems that meet the following UNECE standards are permitted for use in the vehicle:

- UN-R44
- UN-R129

Identification on the child restraint system

The following information, e.g., is available on the approval label on the child restraint system:

- Approval category
- Child weight group
- Authorisation number
- Child restraint size class

Approval categories in accordance with UN-R44

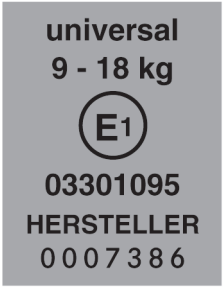

Example of an approval label

- **Universal:** child restraint systems in the "Universal" category are approved for installation in vehicles. They can be used, in accordance with overviews of the suitability of seats for securing child restraint systems, on seats labelled U, UF or IUF.

  The identification IUF refers to ISOFIX child restraint systems in the "Universal" category.

  F177 0066 02

  These child restraint systems must also be secured using Top Tether or support points.
- **Semi-Universal:** child restraint systems in the "Semi-Universal" category may only be used if the vehicle and vehicle seat are listed in the child restraint system manufacturer's vehicle model list.
- **Vehicle-specific:** child restraint systems in the "vehicle-specific" category may only be used if the vehicle and vehicle seat are listed in the child restraint system manufacturer's vehicle model list.

Approval categories in accordance with UN-R129

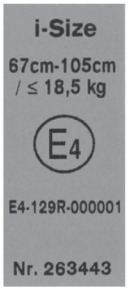

Example of an approval label

- **i-Size**child restraint systems and booster seats with backrest: suitable for attachment to i-Size mounting brackets. They can be used on the seats marked i-U.

  Child restraint systems in this category can also be attached to ISOFIX bars if approved by the manufacturer of the child restraint system. i-Size booster seats with backrest can be used on seats marked U if the seat is approved for category B2/B3.
- Belted child restraint systems and belted booster seats without backrest of the **Universal**category: suitable for attachment to the seats marked U.
- **Vehicle-specific** child restraint systems (ISOFIX or belted attachment as well as child booster seats with and without backrest): suitable for attachment to the seats marked i-U or U if this is approved by the child restraint system manufacturer.

Observe the suitability of vehicle seats

- Suitability of the seats for attaching ISOFIX child restraint systems (→ page 127)
- Suitability of seats for securing i-Size child restraint systems (→ page 129).
- Suitability of seats for attaching belt-secured child restraint systems (→ page 129)

Overview of recommended child restraint systems

ⓘ Further information on the correct child restraint system can be obtained at a qualified specialist workshop. Mercedes-Benz recommends that you use a Mercedes-Benz Service Centre for this purpose.

Securing with ISOFIX

Weight category 0+ (up to 13 kg and up to approximately 15 months)

Type[1]	BABY SAFE plus (including base)
Size category	E
Approval	E1 04 301 146
Order number[2]	B6 6 86 8224
1 Manufacturer: Britax Römer.	2 With colour code 9H95.

Weight category I (9 to 18 kg and from approximately 9 months to 4 years)

Type[1]	DUO plus
Size category	B1
Approval	E1 04 301 133

Type[1]	DUO plus
Order number[2]	A 000 970 43 02
1 Manufacturer: Britax Römer.	2 With colour code 9H95.

Securing with i-Size (R129 child restraint systems)

Weight up to 13 kg, height from 40 to 83 cm, and aged up to about 15 months

Type[1]	Baby Safe 3 i-Size
Size category	R2
Approval	E1*129R03/04*0060 *02
Order number	A 000 970 68 02
Order number FlexBase iSense	A 000 970 73 02
1 Manufacturer: Britax Römer.	

Weight up to 18 kg, height from 61 to 105 cm, and aged from about 3 months to 4 years

Type[1]	Dualfix 3 i-Size
Size category	F2X/R2
Approval	E1*129R03/04*0060 *02
Order number	A000 970 93 02
Order number FlexBase iSense	A000 970 73 02
1 Manufacturer: Britax Römer.	

Weight from 15 to 36 kg, height from 100 to 150 cm, and aged from about 3.5 to 12 years

Type[1]	KIDFIX M i-Size
Size category	B2
Approval	E1*129R03/04*0061 *02
Order number	A 000 970 89 02
1 Manufacturer: Britax Römer.	

Weight from 15 to 36 kg, height from 100 to 150 cm, and aged from about 3.5 to 12 years

Type[1]	AMG KIDFIX M i-Size
Size category	B2
Approval	E1*129R03/04*0061 *02
Order number	A 000 970 91 02
1 Manufacturer: Britax Römer.	

Securing with the vehicle seat belt

Weight category 0 (up to 10 kg and approximately 6 months) and weight category 0+ (up to 13 kg and approximately 15 months)

Type[1]	BABY SAFE plus II
Approval	E1 04 301 146
Order number[2]	A 000 970 38 02
1 Manufacturer: Britax Römer.	2 With colour code 9H95.

R129 child restraint system (weight up to 13 kg, height from 40 to 83 cm, and aged up to about 15 months)

Type[1]	Baby Safe 3 i-Size
Size category	R2
Approval	E1*129R03/04*0060*02
Order number	A 000 970 68 02
1 Manufacturer: Britax Römer.	

Weight category I (9 to 18 kg and from approximately 9 months to 4 years)

Type[1]	DUO plus
Approval	E1 04 301 133
Order number[2]	A 000 970 43 02
1 Manufacturer: Britax Römer.	2 With colour code 9H95.

Weight category II/III (15 to 36 kg and from approximately 3 to 12 years)

Type[1]	KIDFIX XP
Approval	E1 04 301 304
Order number[2]	A 000 970 49 02
1 Manufacturer: Britax Römer.	2 With colour code 9H95.

Weight category II/III (15 to 36 kg and from approximately 3 to 12 years)

Type[1]	AMG KIDFIX XP
Approval	E1 04 301 304
Order number[2]	A 000 970 33 02
1 Manufacturer: Britax Römer.	2 With colour code 9H95.

R129 child restraint systems (weight from 15 to 36 kg, height from 100 to 150 cm, and aged from about 3.5 to 12 years)

Type[1]	KIDFIX M i-Size
Size category	B2
Approval	E1*129R03/04*0061*02
Order number	A 000 970 89 02
1 Manufacturer: Britax Römer.	

R129 child restraint systems (weight from 15 to 36 kg, height from 100 to 150 cm, and aged from about 3.5 to 12 years)

Type[1]	AMG KIDFIX M i-Size
Size category	B2
Approval	E1*129R03/04*0061*02
Order number	A 000 970 91 02
1 Manufacturer: Britax Römer.	

Suitable seats for attaching child restraint systems

Overview of suitability of the seats for attaching ISOFIX child restraint systems

ISOFIX is a standardised securing system for specially designed child restraint systems.

The symbol indicates seats suitable for attaching an ISOFIX child restraint system in accordance with UN R44 (→ page 122).

ISOFIX child restraint systems can also be installed on seats with i-Size markings (→ page 129).

Attach only ISOFIX child restraint systems that are approved in accordance with UN R44 as per the following ISOFIX tables.

Carry cot

Size class – Equipment	Left/right rear seat
F – ISO/L1	X
G – ISO/L2	X
X Not suitable for an ISOFIX child restraint system in this weight category and/or size class.	

Weight category 0 (up to 10 kg and up to approx. 6 months)

Size class – Equipment	Left/right rear seat
E – ISO/R1	IL
IL Suitable for ISOFIX child restraint systems according to the table in "Overview of the recommended child restraint systems", or if the vehicle and the seat are listed on the child restraint system manufacturer's vehicle model list.	

Weight category 0+ (up to 13 kg and up to approx. 15 months)

Size class – Equipment	Left/right rear seat
E – ISO/R1	IL
D – ISO/R2, ISO/R2X	IL

Size class – Equipment	Left/right rear seat
C – ISO/R3	IL (1)
IL Suitable for ISOFIX child restraint systems according to the table in "Overview of the recommended child restraint systems", or if the vehicle and the seat are listed on the child restraint system manufacturer's vehicle model list. (1) When using a child restraint system of size class (ISO/R3), move the front seat into the highest position. Make sure that the seat backrest of the front seat does not rest against the child restraint system.	

Weight category 1 (9–18 kg and approx. 9 months to 4 years)

Size class – Equipment	Left/right rear seat
D – ISO/R2, ISO/R2X	IL
C – ISO/R3	IL (1)
B – ISO/F2	IUF
B1 – ISO/F2X	IUF
A – ISO/F3	IUF
IL Suitable for ISOFIX child restraint systems according to the table in "Overview of the recommended child restraint systems", or if the vehicle and the seat are listed on the child restraint system manufacturer's vehicle model list. IUF Suitable for forward-facing ISOFIX child restraint systems of the "Universal" category in this weight category. (1) When using a child restraint system of size class (ISO/R3), move the front seat into the highest position. Make sure that the seat backrest of the front seat does not rest against the child restraint system.	

Overview of suitability of the seats for attaching i-Size child restraint systems

i-Size is a standardised securing system for specially designed child restraint systems.

i-Size child restraint systems can be attached to a seat with the i-Size marking (→ page 122).

Child restraint systems that are approved in accordance with the following i-Size table may be attached.

Left and right rear seat

i-Size child restraint systems (ISO/R1, ISO/R2, ISO/R2X, ISO/R3, ISO/F2, ISO/F2X, ISO/F3, ISO/B2, ISO/B3)	i-U
i-U Suitable for forward-facing and rearward-facing i-Size child restraint systems in the "Universal" category.	

Front passenger seat

i-Size child restraint systems (ISO/R1, ISO/R2, ISO/R2X, ISO/R3, ISO/F2, ISO/F2X, ISO/F3, ISO/B2, ISO/B3)	X
X Not suitable for an i-Size child restraint system in the "Universal" category.	

Overview of the suitability of seats for attaching belt-secured child restraint systems

Suitability of seats for attaching belt-secured child restraint systems

Rear seats

Weight category 0: to 10 kg	
Left/right rear seat	U, L
Centre rear seat[1]	U, L
Weight category 0+: to 13 kg	
Left/right rear seat	U, L
Centre rear seat[1]	U, L
Weight category I: 9 to 18 kg	
Left/right rear seat	U, L
Centre rear seat[1]	U, L
Weight category II: 15 to 25 kg	
Left/right rear seat	U, L
Centre rear seat[1]	U, L
Weight category III: 22 to 36 kg	
Left/right rear seat	U, L
Centre rear seat[1]	U, L
1 Child restraint systems with a supporting bracket are not suitable for this seat.	

U Suitable for child restraint systems of the "Universal" category in this weight category.	
L Suitable for semi-universal child restraint systems according to the table in "Recommended child restraint systems", or if the vehicle and the seat are listed in the child restraint system manufacturer's vehicle model list.	

Notes on child restraint systems on the front passenger seat

- If it is absolutely necessary for you to fit a child restraint system to the front passenger seat, be sure to observe the information on child restraint systems on the front passenger seat (→ page 120).
- Observe the specific instructions for the rearward-facing and forward-facing child restraint systems. If the front passenger seat is occupied, ensure, both before and during the journey, that the status of the front passenger airbag is correct for the current situation (→ page 103).

Front passenger seat

Weight category 0: to 10 kg	
Front passenger airbag enabled[1]	X
Front passenger airbag disabled[1, 2]	U, L
Weight category 0+: to 13 kg	
Front passenger airbag enabled[1]	X
Front passenger airbag disabled[1, 2]	U, L
Weight category I: 9 to 18 kg	
Front passenger airbag enabled[1]	UF, L
Front passenger airbag disabled[1, 2]	U, L
Weight category II: 15 to 25 kg	
Front passenger airbag enabled[1]	UF, L
Front passenger airbag disabled[1, 2]	U, L
Weight category III: 22 to 36 kg	
Front passenger airbag enabled[1]	UF, L
Front passenger airbag disabled[1, 2]	U, L

1 Adjust the seat cushion inclination so that the front edge of the seat cushion is in the highest position and the rear edge of the seat cushion is in the lowest position.	
2 The vehicle is equipped with automatic front passenger airbag shutoff. The PASSENGER AIR BAG OFF indicator lamp must be lit.	
X Not suitable for children in this weight category.	
U Suitable for child restraint systems of the "Universal" category in this weight category.	
L Suitable for semi-universal child restraint systems according to the table in "Recommended child restraint systems", or if the vehicle and the seat are listed in the child restraint system manufacturer's vehicle model list.	
UF Suitable for forward-facing child restraint systems of the "Universal" category in this weight category.	

Securing the child restraint system

Adjusting the seat correctly

When fitting a child restraint system on the left or right rear seat, always observe the following:

- Make sure that the child's feet do not touch the front seat. If necessary, move the front seat slightly forwards.

If the head restraint of the child restraint system cannot be fully extended when it is installed in the vehicle, this will result in restrictions on the maximum size setting for certain child restraint systems. Observe the child restraint system manufacturer's installation instructions.

ⓘ Contact with the roof when the head restraint is fully extended and locked in place will not result in any restrictions on use.

When fitting an ISOFIX/LATCH or i-Size child restraint system, also observe the following:

- **When using a rearward-facing child restraint system on a rear seat:** adjust the front seat so that it does not touch the child restraint system.
- **When using a forward-facing child restraint system with integrated child seat belt:** adjust the head restraint of the respective seat so that it does not push the child restraint system forwards. If necessary, the respective head restraint can be removed. In addition, the backrest of the child restraint system must lie as flat as possible against the backrest of the

vehicle seat. After the child restraint system has been removed, replace the vehicle head restraint immediately and adjust correctly.

- The child restraint system must not be put under strain between the roof and the seat cushion and/or be fitted facing the wrong direction. Where possible, adjust the seat cushion inclination accordingly.
- Adjust the vehicle head restraints so that the child restraint system is not put under strain by the head restraint.

When fitting a belt-secured child restraint system, also observe the following:

- **When using a rearward-facing child restraint system on a rear seat:** adjust the front seat so that it does not touch the child restraint system.
- **When using a forward-facing child restraint system with integrated child seat belt:** adjust the head restraint of the respective seat so that it does not push the child restraint system forwards. If necessary, the respective head restraint can be removed. In addition, the backrest of the child restraint system must lie as flat as possible against the backrest of the vehicle seat. After the child restraint system has been removed, replace the vehicle head restraint immediately and adjust correctly.
- The backrest of the forward-facing child restraint system must, as far as possible, be resting on the seat backrest of the rear seat.
- The child restraint system must not be put under strain between the roof and the seat cushion and/or be fitted facing the wrong direction. Where possible, adjust the seat cushion inclination accordingly.
- Adjust the vehicle head restraints so that the child restraint system is not put under strain by the head restraint.
- Make sure that the child's feet do not touch the front seat. If necessary, move the front seat slightly forwards.

Depending on the vehicle equipment, always observe the following when fitting a belt-secured child restraint system on the front passenger seat:

- Observe the notes on rearward-facing and forward-facing child restraint systems on the front passenger seat (→ page 120).
- **When using a forward-facing child restraint system integrated child seat belt:** remove the head restraint from the respective seat, if possible. After the child restraint system has been removed, immediately replace the head restraint and adjust correctly.
- The backrest of the forward-facing child restraint system must, as far as possible, be resting on the seat backrest of the front passenger seat.
- The child restraint system must not be put under strain between the roof and the seat cushion and/or be fitted facing the wrong direction.

- Adjust the vehicle head restraints so that the child restraint system is not put under strain by the head restraint.
- Never place objects (e.g. cushions) under or behind the child restraint system.
- Set the front passenger seat as far back as possible and move the seat into the highest position if possible. Always make sure that the shoulder belt strap is correctly routed from the seat belt outlet of the vehicle to the shoulder belt guide on the child restraint system. The shoulder belt strap must be routed forwards from the seat belt outlet and, where possible, downwards to the child restraint system.
- Fully retract the seat cushion length adjustment.
- Adjust the seat cushion inclination so that the front edge of the seat cushion is in the highest position and the rear edge of the seat cushion is in the lowest position.
- Set the seat backrest to the most vertical position possible.

Fitting an ISOFIX or i-Size child restraint system

⚠ **WARNING** Risk of accident if the rear bench seat, rear seat and seat backrest are not engaged

The rear bench seat, rear seat and seat backrest may fold forwards, even while the vehicle is in motion.

- As a result, the vehicle occupant will be pressed into the seat belt with increased force. The seat belt will not be able to protect as intended and could cause additional injury.
- Objects or loads in the boot or load compartment cannot be restrained by the seat backrest.

- Make sure that the rear bench seat, the rear seat and the seat backrest are engaged before every trip.

If the rear seat backrest is not engaged and locked in place, the red lock verification indicator will be visible.

⚠ **WARNING** Risk of injury or death if the permissible gross mass of the child and child restraint system together is exceeded.

Too much load may be placed on the ISOFIX or i-Size child restraint systems and the child may not be restrained correctly in the event of an accident, for example.

- If the child is secured in an ISOFIX or i-Size child restraint system with integrated seat belts, the total mass of the child and child restraint system must not exceed 33 kg.

Always observe the information on the mass of the child restraint system:

- in the installation and operating instructions of the manufacturer of the child restraint system
- on a label on the child restraint system, if present

Regularly check that the permitted total mass of the child and child restraint system is still being adhered to.

When fitting a child restraint system, also always observe the following:

☑ Always observe the area of use and the suitability of the seats for mounting a child restraint system.

ISOFIX mounting brackets (→ page 127).

or

i-Size mounting brackets (→ page 129)

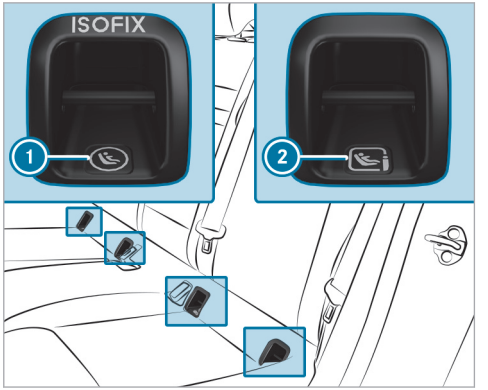

① ISOFIX mounting bracket
② i-Size mounting brackets

▶ Always be sure to check before every journey that the ISOFIX child restraint system or the i-Size child restraint system is correctly locked in place in both on-board mounting brackets.

! **NOTE** Damage to the seat belt for the centre seat during installation of the child restraint system

▶ Make sure that the seat belt is not trapped.

▶ Attach the ISOFIX or i-Size child restraint system to both mounting brackets in the vehicle.

Fastening a Top Tether

⚠ **WARNING** Risk of injury or death if the rear seat backrests are not locked after Top Tether belts are fitted

The rear seat backrests may fold forwards when you are driving.

As a result, child restraint systems will no longer be able to perform their intended protective function. This may also cause additional injuries.

▶ Always lock rear seat backrests after fitting Top Tether belts.

▶ Observe the lock verification indicator.

If the rear seat backrest is not engaged and locked in place, the red lock verification indicator will be visible.

If the child restraint system is equipped with a Top Tether belt:

The risk of injury may be reduced by Top Tether. The Top Tether belt enables an additional connection between the child restraint system attached with ISOFIX or i-Size and the vehicle.

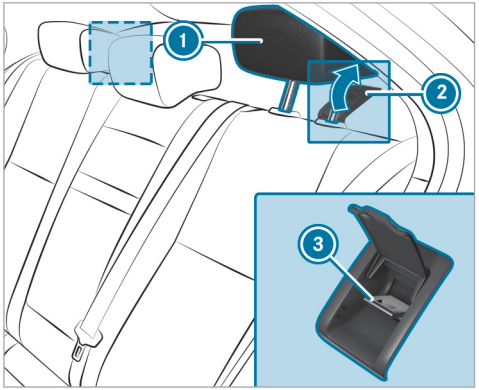

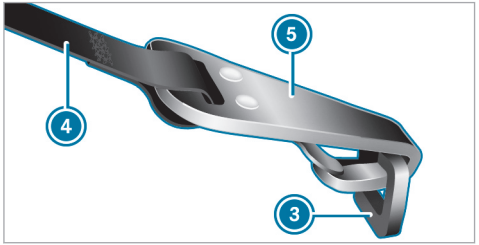

F177 0066 02

▶ Fold up cover ② of Top Tether anchorage ③.

Vehicles with adjustable head restraints:

▶ If necessary, slide head restraint ① upwards (→ page 174).

▶ Guide Top Tether belt ④ under head restraint ① between the two head restraint bars.

Vehicles without adjustable head restraints:

▶ Top Tether belt with one seat belt strap: guide Top Tether belt ④ over the centre of head restraint ①.

or

▶ Top Tether belt with two seat belt straps: guide one Top Tether belt ④ past head restraint ① on the right and left sides respectively.

All vehicles:

▶ Fit the ISOFIX or i-Size child restraint system with Top Tether. In doing so, comply with the child restraint system manufacturer's installation instructions.

- Hook Top Tether hook ⑤ of Top Tether belt ④ into Top Tether anchorage ③ without twisting.
- Tension Top Tether belt ④. In doing so, comply with the child restraint system manufacturer's installation instructions.
- Fold down cover ② of Top Tether anchorage ③.

Vehicles with adjustable head restraints:

- If necessary, slide head restraint ① downwards (→ page 174). Make sure that you do not interfere with the correct routing of Top Tether belt ④.

Securing the child restraint system with the seat belt

WARNING Risk of accident if the rear bench seat, rear seat and seat backrest are not engaged

The rear bench seat, rear seat and seat backrest may fold forwards, even while the vehicle is in motion.

- As a result, the vehicle occupant will be pressed into the seat belt with increased force. The seat belt will not be able to protect as intended and could cause additional injury.
- Objects or loads in the boot or load compartment cannot be restrained by the seat backrest.

- Make sure that the rear bench seat, the rear seat and the seat backrest are engaged before every trip.

If the rear seat backrest is not engaged and locked in place, the red lock verification indicator will be visible.

- For a child restraint system of the category "Universal" or "Semi-Universal" ensure that this is approved for the vehicle seat.
- Fit the child restraint system.
  The entire base of the child restraint system must always rest on the sitting surface of the seat.
- Always make sure that the shoulder belt strap is correctly routed from the seat belt outlet of the vehicle to the shoulder belt guide on the child restraint system.
  The shoulder belt strap must be routed forwards from the seat belt outlet and, where possible, downwards to the child restraint system.
- **When fitting on the rear seat:** also secure Top Tether to the front passenger seat, if present.
- **When fitting on the front passenger seat:** if necessary, adjust the seat belt outlet as appropriate.

Child safety locks

Activating or deactivating the child safety lock for the rear doors

⚠ **WARNING** Risk of accident- and injury due to children left unattended in the vehicle

When children are left unattended in the vehicle, they can be expected in particular to

- open doors, thereby endangering other persons or road users.
- get out and be struck by oncoming traffic.
- operate vehicle equipment and become trapped, for example.

In addition, the children could also set the vehicle in motion, for example by:

- releasing the parking brake.
- changing the drive range.
- starting the vehicle.

▶ Never leave children unattended in the vehicle.

▶ When leaving the vehicle, always take the key with you and lock the vehicle.

▶ Keep the key out of reach of children.

⚠ **WARNING** Risk of fatal injury due to exposure to extreme heat or cold in the vehicle

If persons, particularly children, are subjected to prolonged exposure to intense heat or cold, there is a risk of severe injury or even death.

▶ Never leave persons, particularly children, unattended in the vehicle.

⚠ **WARNING** Risk of accident and injury due to children left unattended in the vehicle

If children are travelling in the vehicle, they could, in particular:

- open doors, thereby endangering other persons or road users.
- get out and be struck by oncoming traffic.
- operate vehicle equipment and become trapped, for example.

▶ Always activate the installed child safety locks if children are travelling in the vehicle.

▶ Never leave children unattended in the vehicle.

▶ When leaving the vehicle, always take the key with you and lock the vehicle.

Vehicles for the United Kingdom: observe the important safety notes in the "Notes on the additional door lock" section.

There are child safety locks for the rear doors and the rear side windows.
The child safety lock on the rear doors secures each door separately. The doors can no longer be opened from the inside.

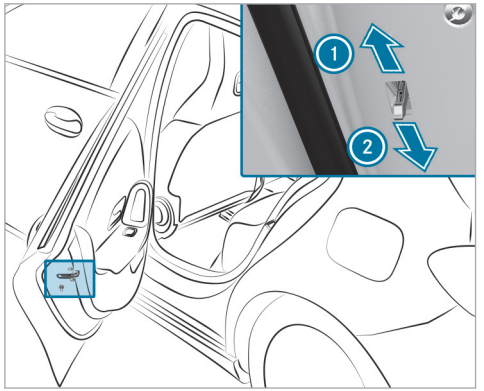

- Press the lever in direction 1 (activate) or 2 (deactivate).
- Check the functionality of the child safety lock.

Activating and deactivating the child safety lock for the rear side windows

WARNING Risk of accident- and injury due to children left unattended in the vehicle

When children are left unattended in the vehicle, they can be expected in particular to

- open doors, thereby endangering other persons or road users.
- get out and be struck by oncoming traffic.
- operate vehicle equipment and become trapped, for example.

In addition, the children could also set the vehicle in motion, for example by:

- releasing the parking brake.
- changing the drive range.
- starting the vehicle.

- Never leave children unattended in the vehicle.
- When leaving the vehicle, always take the key with you and lock the vehicle.
- Keep the key out of reach of children.

WARNING Risk of fatal injury due to exposure to extreme heat or cold in the vehicle

If persons, particularly children, are subjected to prolonged exposure to intense heat or cold, there is a risk of severe injury or even death.

- Never leave persons, particularly children, unattended in the vehicle.

WARNING Risk of accident and injury due to children left unattended in the vehicle

If children are travelling in the vehicle, they could, in particular:

- open doors, thereby endangering other persons or road users.
- get out and be struck by oncoming traffic.
- operate vehicle equipment and become trapped, for example.

- Always activate the installed child safety locks if children are travelling in the vehicle.
- Never leave children unattended in the vehicle.
- When leaving the vehicle, always take the key with you and lock the vehicle.

Vehicles for the United Kingdom: observe the important safety notes in the "Notes on the additional door lock" section.

There are child safety locks for the rear doors and the rear side windows.

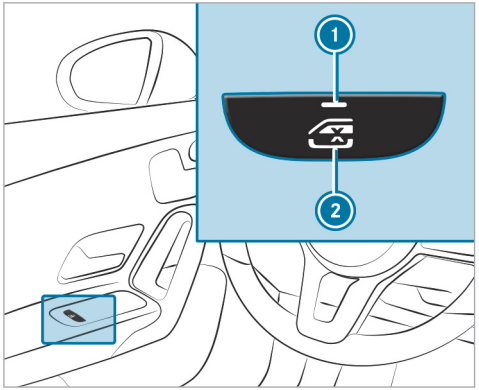

- **To activate/deactivate:** press button 2.

  The rear side window can be opened or closed in the following cases:

  - Indicator lamp 1 is lit: via the switch on the driver's door
  - Indicator lamp 1 is off: via the switch on the corresponding rear door or driver's door

F177 0066 02

Occupant presence reminder

Function of the occupant presence reminder

The occupant presence reminder can help to remind you about a child who may have been forgotten in the rear compartment of the vehicle. It activates and deactivates automatically when the rear door is open for an extended period of time and a child which the system presumes to be present could enter or exit the vehicle.

When the vehicle is switched off, the Do not leave persons or animals in the vehicle message appears on the driver's display if the system was already automatically activated.

You can permanently deactivate the function in the multimedia system (→ page 140). When the system is deactivated, the OFF indicator lamp in the driver's display lights up.

Activating or deactivating the occupant presence reminder in the multimedia system

Multimedia system:

→ [⌂] ▸▸ Settings ▸▸ Vehicle ▸▸ Occupant protection

▶ Activate or deactivate the function.

Key

Overview of key functions

WARNING Accident- and risk of injury with unsupervised children in the vehicle

If you leave children unattended in the vehicle, they can in particular

- Open doors and thereby endanger other persons or road users.
- get out of the car and are hit by traffic.
- Operate vehicle equipment and become trapped, forexample.

In addition, the children could also set the vehicle in motion, for exampleby:

- releasing the parking brake.
- change the gearbox setting.
- start the vehicle.

▶ Never leave children unattended in the vehicle.

▶ When leaving the vehicle, always take the SmartKey with you and lock the vehicle.

▶ Keep the key out of reach of children.

NOTE Damage to the key caused by magnetic fields

▶ Keep the key away from strong magnetic fields.

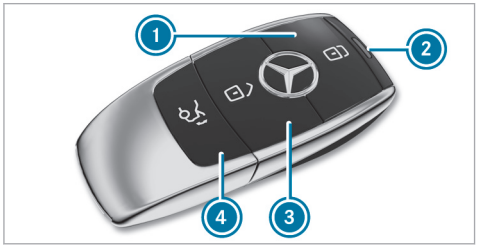

Vehicle key

1. Locking
2. Indicator lamp
3. Unlocking
4. Opening the boot lid

ⓘ If indicator lamp 2 does not light up after pressing the [ ] or [ ] button, the battery is weak or possibly discharged. Replace the battery as soon as possible.

Replace the key battery (→ page 144).

The key locks and unlocks the following components:

- Doors
- Fuel filler flap
- Socket flap (plug-in hybrid)
- Boot lid

If the vehicle is not opened within approximately 40 seconds after unlocking, it locks again. Anti-theft protection is primed again.

Do not keep the key together with electronic devices or metal objects. This can affect the key's functionality.

Activating/deactivating the acoustic locking verification signal

Multimedia system:

→ [⌂] ▸▸ Settings ▸▸ Vehicle ▸▸ Open/close

▶ Activate or deactivate the Acoustic lock.

ⓘ **Please observe:**
The selected setting for the acoustic locking verification signal must comply with the relevant national road and traffic regulations. In some countries, including Germany, using the acoustic locking verification signal is forbidden by traffic laws (in accordance with §16 Para. 1 and §30 Para. 1 of the German national road traffic regulations). The driver of the vehicle must comply with these regulations. In countries where the use of this function is forbidden, this function is not activated in the vehicle and must not be activated.

Changing the unlocking settings

Possible unlocking functions of the key:

- Central unlocking
- Unlocking the driver's door and fuel filler flap
- **Plug-in hybrid:** unlocking the driver's door and fuel filler flap/socket flap

▶ **To switch between settings:** press the [🔓] and [🔓] buttons simultaneously for approximately six seconds until the indicator lamp flashes twice.

Options if the unlocking function for the driver's door and fuel filler flap has been selected:

- **To unlock the vehicle centrally:** press the [🔓] button twice.
- **Vehicles with KEYLESS-GO:** if you touch the inner surface of the door handle on the driver's door, only the driver's door and the fuel filler flap are unlocked.

Options if the unlocking function for the driver's door and fuel filler flap/socket flap has been selected (plug-in-hybrid):

- **To unlock the vehicle centrally:** press the [🔓] button twice.
- **Vehicles with KEYLESS-GO:** if you touch the inner surface of the door handle on the driver's door, only the driver's door and the fuel filler flap/socket flap are unlocked.

Deactivating the function of the key

Vehicles with KEYLESS-GO: if you deactivate the function of the key, the KEYLESS-GO functions are also deactivated. Access or drive authorization via KEYLESS-GO is then no longer possible with that key. Activate the function of the key so that all of its functions are available once again.

You can also deactivate the key's function to reduce the key's energy consumption if you do not use the vehicle or a key for an extended period of time.

▶ Press and hold the key button [🔓].

- With the key button [ ] pressed, immediately press key button [ ] twice in quick succession.
  The indicator light of the key lights up once briefly, and then again for longer.

ⓘ You have the following options to reactivate the key:

- Press any button on the key.
- Start the vehicle with the key in the centre console storage compartment(→ page 234).

Removing/inserting the emergency key

Removing the emergency key

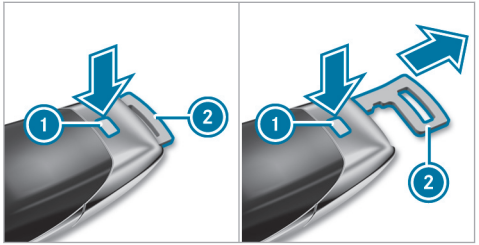

- Press the release button ①.
  The emergency key ② is pushed out slightly.
- Pull out the emergency key ② until it engages in the intermediate position.

ⓘ Depending on the vehicle's equipment, the intermediate position is not available.

- Press the release button ① again and fully remove the emergency key ②.

Inserting the emergency key

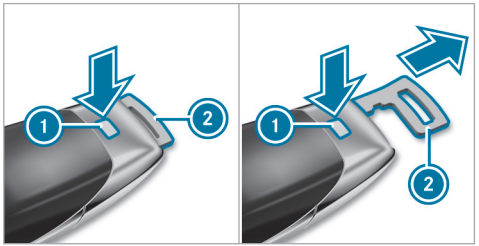

- Press the release button ①.
- Insert the emergency key ② to the intermediate position or fully until it engages.

ⓘ You can use the intermediate position of the emergency key ② to attach the key to a key ring.

Replacing the key battery

DANGER Risk of fatal injury due to swallowing batteries

Batteries contain toxic and corrosive substances. If batteries are swallowed or otherwise enter the body, severe internal burns can occur within two hours.

There is a risk of fatal injury!

- Keep the batteries out of the reach of children.
- If the lid and/or the battery compartment do not close securely, stop using the key and keep it away from children.
- If batteries are swallowed or otherwise enter the body, seek immediate medical attention.

ENVIRONMENTAL NOTE Environmental damage due to improper disposal of batteries

Batteries contain pollutants. It is illegal to dispose of them with the household rubbish.

- Dispose of batteries in an environmentally responsible manner. Take discharged batteries to a qualified specialist workshop or to a collection point for used batteries.

Requirements

- You require a CR 2032 3 V cell battery.

Mercedes-Benz recommends that you have the battery replaced at a qualified specialist workshop.

- Remove the emergency key (→ page 143).

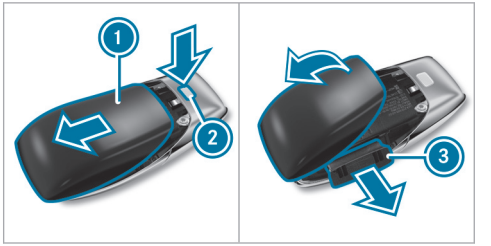

- Press release knob ② down fully and slide cover ① in the direction of the arrow.
- Fold out cover ① in the direction of the arrow and remove.
- Remove battery compartment ③ and take out the discharged battery.
- Insert the new battery into battery compartment ③. Observe the positive pole marking in the battery compartment and on the battery when doing this.
- Push in battery compartment ③.
- Re-attach cover ① and push it until it engages.

Problems with the key, troubleshooting

You can no longer lock or unlock the vehicle

Possible causes:

- The key battery is weak or discharged.

▶ Check the battery using the indicator lamp (→ page 141).
▶ Replace the key battery, if necessary (→ page 144).
▶ Use the replacement key.
▶ Use the emergency key to lock or unlock (→ page 149).
▶ Have key checked at a qualified specialist workshop.

There is interference from a powerful radio signal source

Possible causes if the function of the key is impaired:

- high voltage power lines
- mobile phones
- electronic devices (notebooks, tablets)
- shielding due to metal objects or induction loops for electrical gate systems or automatic barriers

▶ Make sure that there is sufficient distance between the key and the potential source of interference.

You have lost a key

▶ Have the key deactivated at a qualified specialist workshop.
▶ If necessary, have the mechanical lock replaced as well.

Doors

Notes on the additional door lock

The additional door lock is only available for vehicles for the United Kingdom.

⚠ **WARNING** Risk of injury to persons inside the vehicle when the additional door lock is activated

If the additional door lock is activated, the doors can no longer be opened from the inside.

▶ Never leave persons, in particular children, unattended in the vehicle.
▶ If there are persons in the vehicle, do not activate the additional door lock.

The additional door lock is automatically activated in the following situations:

- The vehicle is locked using the key.
- The vehicle is locked using KEYLESS-GO.

If the vehicle has been locked via Mercedes me connect, the additional door lock is not activated (→ page 518).

If the additional door lock is activated, the doors cannot be opened from the inside.

ⓘ After locking you can issue a signal with the horn.

You can prevent the additional door lock from being activated by deactivating interior protection before locking the vehicle (→ page 163).

Unlocking/opening the doors from the inside

▶ **United Kingdom only:** observe the notes on the additional door lock (→ page 145).

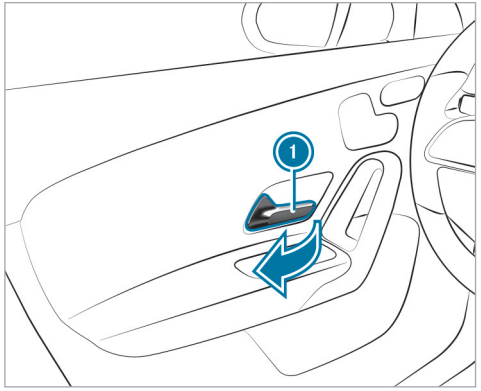

▶ Pull the door ① handle.

Centrally locking and unlocking the vehicle from the inside

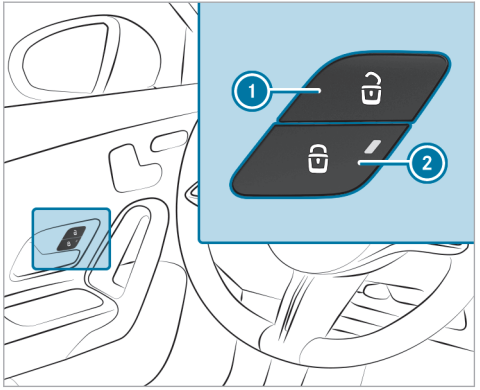

▶ **To unlock:** press ① button.

▶ **To lock:** press button ②.
The red indicator lamp on button ② lights up once the vehicle is locked.

This does not lock or unlock the fuel filler flap.

Plug-in hybrid: the socket flap is also locked and unlocked. The socket flap can be opened even if a key is detected in the car.

The vehicle is not unlocked:

- if you have locked the vehicle using the key
- if you have locked the vehicle using KEYLESS-GO

Locking/unlocking the vehicle with KEYLESS-GO

Requirements

- The key is outside the vehicle.
- The distance between the key and the vehicle does not exceed 1 m.
- The driver's door and the door on which the door handle is used are closed.

! **NOTE** Damage to the vehicle caused by unintentionally opening the boot lid

- when using an automatic car wash
- when using a high pressure cleaner

▶ Deactivate the function of the key in these situations.

or

▶ Make sure that the key is at a minimum distance of 3 m away from the vehicle.

Observe the notes:

- on washing the vehicle in a car wash (→ page 30)
- on using a high pressure cleaner (→ page 564)

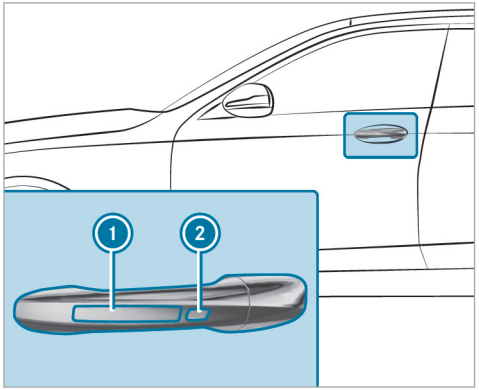

▶ **To unlock the vehicle:** touch the inner surface of the door handle.

▶ **To lock the vehicle:** touch sensor surface ① or ②.

▶ **Convenience closing:** touch recessed sensor surface ② until the closing process has been completed.

ⓘ Further information on convenience closing (→ page 156).

If you open the boot lid from outside, the boot lid is automatically unlocked.

Problems with KEYLESS-GO, troubleshooting

You can no longer lock or unlock the vehicle using KEYLESS-GO

Possible causes:

- The function of the key has been deactivated.
- The key battery is weak or discharged.

▶ Activate the function of the key (→ page 59).

▶ Check the battery using the indicator lamp (→ page 141).

▶ Replace the key battery, if necessary (→ page 144).

▶ Use the replacement key.

▶ Use the emergency key to lock or unlock (→ page 149).

▶ Have the vehicle and key checked at a qualified specialist workshop.

There is interference from a powerful radio signal source

Possible causes if the function of KEYLESS-GO is impaired:

- high voltage power lines
- mobile phones
- electronic devices (notebooks, tablets)
- shielding due to metal objects or induction loops for electrical gate systems or automatic barriers

▶ Make sure that there is sufficient distance between the key and the potential source of interference.

Activating/deactivating the automatic locking feature

The vehicle is locked automatically when the vehicle is switched on and the wheels are turning faster than walking pace.

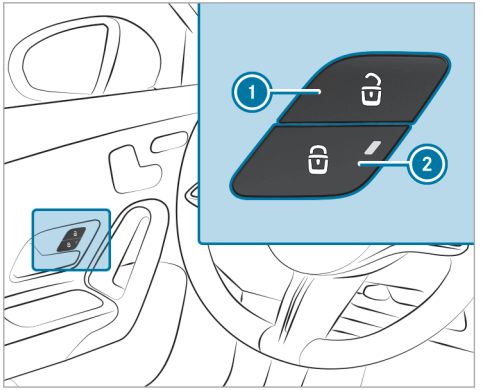

▶ **To activate:** press and hold button ② for approximately five seconds until an acoustic signal sounds.

▶ **To deactivate:** press and hold button ① for approximately five seconds until an acoustic signal sounds.

The red indicator lamp on button ② lights up once the vehicle is locked.

In the following situations, there is a danger of being locked out when the function is activated:

- while the vehicle is being tow-started or pushed
- if the vehicle is being tested on a roller dynamometer

Activating or deactivating the automatic locking function

Multimedia system:

→ [⌂] ▸▸ Settings ▸▸ Vehicle ▸▸ Open/close

ⓘ The vehicle is locked automatically when the vehicle is switched on and the wheels are turning faster than walking pace.

▶ Activate or deactivate Automatic locking.

In the following situations, there is a risk of being locked out when the function is activated:

- The vehicle is being towed or pushed.
- If the vehicle is being tested on a roller dynamometer.

Locking/unlocking the vehicle with the emergency key

Locking/unlocking the driver's door with the emergency key

ⓘ If you wish to lock the vehicle entirely using the emergency key, first press the button for locking from the inside while the driver's door is open. Then proceed to lock the driver's door using the emergency key.

ⓘ If you unlock and open the driver's door with the emergency key, this triggers the burglar alarm system.

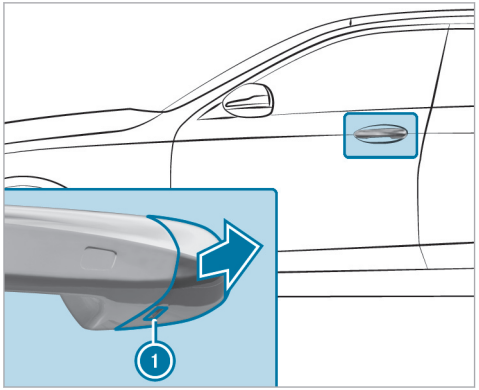

- Remove the emergency key (→ page 143).
- Insert the emergency key as far as it will go into opening ① in the cover.
- Pull and hold the door handle.
- Pull the cover on the emergency key as straight as possible away from the vehicle until it releases.
- Release the door handle.

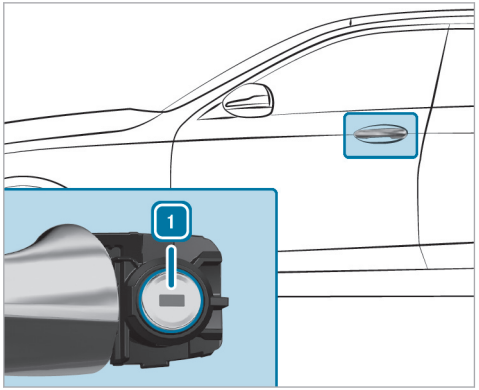

- **To unlock:** turn the emergency key anti-clockwise to position 1.
- **To lock:** turn the emergency key clockwise to position 1.
- Carefully press the cover onto the lock cylinder until it engages and is seated firmly.

F177 0066 02

Locking the front passenger door and rear doors

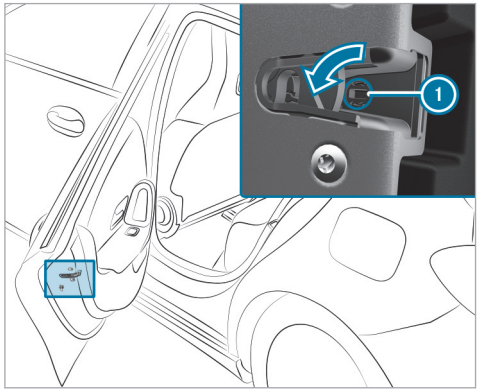

- Insert a suitable object, e.g. the emergency key, into opening (1) on the door lock.
- **To lock the left-hand side of the vehicle:** turn the emergency key anti-clockwise as far as it will go.
- **To lock the right-hand side of the vehicle:** turn the emergency key clockwise as far as it will go.

If the locked door is then closed, it can no longer be opened from the outside.

Boot

Opening the boot lid

DANGER Risk of exhaust gas poisoning

Combustion engines emit poisonous exhaust gases such as carbon monoxide. Exhaust gases can enter the vehicle interior if the boot lid is open when the engine is running, especially if the vehicle is in motion.

- Always switch off the engine before opening the boot lid.
- Never drive with the boot lid open.

NOTE Damage to the boot lid by obstacles above the vehicle

The boot lid swings upwards when it is opened.

- Therefore, make sure that there is sufficient clearance above the boot lid.

- Pull the boot lid handle.
- **Vehicles with HANDS-FREE ACCESS:** make a kicking movement with your foot below the bumper (→ page 151).

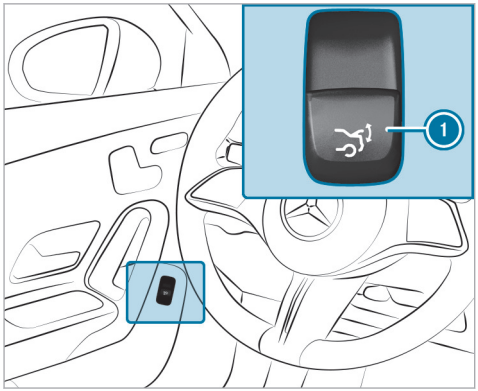

▶ Pull remote operating switch ① until the boot lid opens.

or

▶ Press and hold the button on the key.

Closing the boot lid

⚠ **WARNING** Risk of injury from unsecured items in the vehicle

If objects, luggage or loads are not secured or not secured sufficiently, they could slip, tip over or be thrown around and thereby hit vehicle occupants.

There is a risk of injury, particularly in the event of sudden braking or a sudden change in direction.

▶ Always stow objects in such a way that they cannot be thrown around.

▶ Before the journey, secure objects, luggage or loads against slipping or tipping over.

Observe the notes on loading the vehicle.

Notes on closing the boot lid: your vehicle is equipped with automatic key recognition. If a key belonging to the vehicle is detected in the vehicle, the boot lid will not be locked and will pop open again.

Note that the boot lid will not be locked if the following situation occurs:

- You have locked the vehicle and close the boot lid while a key belonging to the vehicle is inside the vehicle.

  and

- A second key belonging to the vehicle is not detected outside the vehicle.

Automatic key recognition is only an aid and is not a substitute for your attentiveness.

▶ Before locking, ensure that at least one key belonging to the vehicle is outside the vehicle.

▶ **To close the boot lid:** pull the boot lid downwards using the handle recess and push it closed.

HANDS-FREE ACCESS function

HANDS-FREE ACCESS allows you to open the boot lid by performing a kicking motion under the bumper. The transmission must be in position P for this function.

Observe the notes when opening the boot lid (→ page 150).

WARNING Risk of burns caused by a hot exhaust system

The vehicle exhaust system can become very hot. If you use HANDS-FREE ACCESS, you could burn yourself by touching the exhaust system.

▶ Always ensure that you only make a kicking movement within the detection range of the sensors.

NOTE Damage to the vehicle caused by unintentionally opening the boot lid

- when using an automatic car wash
- when using a high pressure cleaner

▶ Deactivate the function of the key in these situations.

or

▶ Make sure that the key is at a minimum distance of 3 m away from the vehicle.

Ensure that you are standing firmly on the ground before attempting a kicking motion . You could otherwise lose your balance, e.g. on ice.

Observe the following notes:

- The key is behind the vehicle.

  If the key is not recognised:

  - Take the key in your hand.

    or

  - Ensure that the function of the key is activated (→ page 59).
- Stand at least 30 cm away from the vehicle when performing the kicking motion.
- Do not come into contact with the bumper when performing the kicking motion.
- Do not carry out the kicking motion too slowly.
- The kicking motion must be towards the vehicle and back again.
- **Vehicles with trailer hitch:** Perform the kicking motion to the left or right of the ball head.

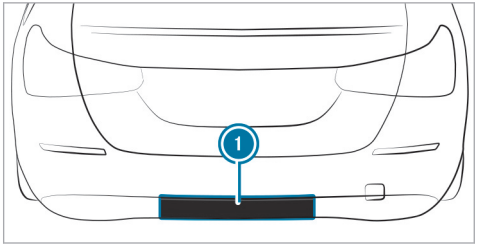

1 Detection range of the sensors

If several consecutive kicking motions are not successful, wait ten seconds.

System limits

The system may be impaired or inoperative in the following cases:

- The sensors are dirty, e.g. due to road salt or snow.
- The kicking motion is made using a prosthetic leg.

The boot lid could be opened unintentionally, in the following situations:

- A person's arms or legs are moving in the sensor detection range, e.g. when polishing the vehicle or picking up objects.
- Objects are moved or placed behind the vehicle, e.g. the hose of a fuel dispenser, a charging cable or luggage
- Tension belts, tarps or other covers are pulled over the bumper.
- A protective mat with a length reaching over the loading sill down into the detection range of the sensors is used.
- The protective mat is not secured correctly.
- **Vehicles with trailer hitch:** Work is being carried out on the trailer hitch, trailers or rear bicycle racks.

Deactivate the function of the key (→ page 59) or do not carry the key about your person in such situations.

You can watch an animation on this topic via the following link:

Activating/deactivating the boot lid opening limiter

Multimedia system:

→ ⌂ ▸▸ Settings ▸▸ Vehicle ▸▸ Other functions

▶ Activate or deactivate Opening height limiter.

This function prevents the boot lid from hitting a low garage ceiling, for example.

Side windows

Opening and closing the side windows

⚠ WARNING Risk of becoming trapped when opening a side window

When you open a side window, parts of the body could be drawn in or become trapped between the side window and window frame.

▶ When opening, make sure that nobody is touching the side window.

▶ If someone is trapped, release the button immediately or pull it in order to close the side window again.

⚠ WARNING Risk of becoming trapped when closing a side window

When closing a side window, body parts could be trapped in the closing area in the process.

▶ When closing, make sure that no body parts are in the closing area.

▶ If someone is trapped, release the button immediately or press the button in order to reopen the side window.

⚠ WARNING Risk of becoming trapped when children operate the side windows

Children could become trapped if they operate the side windows, particularly when unattended.

▶ Activate the child safety lock for the rear side windows.

- When leaving the vehicle, always take the key with you and lock the vehicle.
- Never leave children unattended in the vehicle.

Requirements

- The power supply or the vehicle has been switched on.

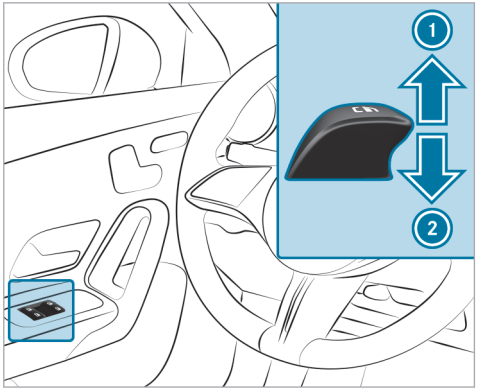

1 Closing
2 Opening

The buttons on the driver's door take precedence.

- **To start automatic operation:** press the button beyond the point of resistance or pull and release it.
- **To interrupt automatic operation:** press or pull the button again.

When the vehicle is switched off, you can continue to operate the side windows.

This function will be available for around four minutes or until a front door is opened.

Automatic reversing function of the side windows

If an obstacle impedes a side window during the closing process, the side window will open again automatically. The automatic reversing function is only an aid and is not a substitute for your attentiveness.

- During the closing process, make sure that no body parts are in the closing area.

WARNING Risk of becoming trapped despite there being reversing protection on the side window

The reversing function does not react:

- to soft, light and thin objects, e.g. fingers.
- during resetting.

The reversing function cannot prevent someone from becoming trapped in these situations.

- ▶ During the closing process, make sure that no body parts are in the closing area.
- ▶ If someone becomes trapped, press the [ ] button to open the side window again.

Automatic function of the side windows

In the following cases, the side windows will be closed automatically when the vehicle is switched off:

- if it starts to rain

  Rain will be detected by a rain sensor on the windscreen.
- in extreme temperatures
- after a certain time (depending on the on-board electrical system voltage)
- if there is a malfunction in the power supply

The side windows will be closed as far as the ventilation position.

Vehicles with a panorama sliding sunroof: the side windows will be closed completely if the sliding sunroof is open.

If the side windows are obstructed during automatic closing, the side window concerned will open again slightly. After another automatic closing process, the automatic function may be deactivated. The automatic function will be active again the next time the vehicle is started.

Convenience opening (ventilating the vehicle before starting a journey)

⚠ **WARNING** Risk of entrapment when opening a side window

When opening a side window, parts of the body could be drawn in or become trapped between the side window and window frame.

- ▶ When opening, make sure that nobody is touching the side window.
- ▶ Release the button immediately if somebody becomes trapped.

Requirements

- The key is near the vehicle.

▶ Press and hold the [ ] button on the key.

The following functions are performed:

- The vehicle is unlocked.
- The side windows are open.
- The panoramic sunroof opens.
- The driver's seat ventilation is switched on (vehicles with AMG performance seats).

ⓘ If the roller sunblind of the panoramic sliding sunroof is closed, the roller sunblind is opened first.

▶ **Interrupt convenience opening:** Release the key [ ].

▶ **Continue convenience opening:** Press key [ ] again and keep it pressed.

Convenience closing (closing the vehicle from outside)

⚠ **WARNING** Risk of entrapment due to not paying attention during convenience closing

When the convenience closing feature is operating, parts of the body could become trapped in the closing area of the side window and the sliding sunroof.

▶ When the convenience closing feature is operating, monitor the entire closing process and make sure that no body parts are in the closing area.

Requirements

- The key is near the vehicle.

▶ Press and hold the [🔒] button on the key.

The following functions are performed:

- The vehicle is locked.
- The side windows are closed.
- The panoramic sliding roof is closed.

▶ **To interrupt convenience closing:** release the [🔒] button.

▶ **To continue convenience closing:** press and hold the [🔒] button again.

ⓘ Convenience closing also functions with KEYLESS-GO (→ page 146).

Resolving problems with the side windows

⚠ **WARNING** Risk of becoming trapped or fatally injured if reversing protection is not activated

If you close a side window again immediately after it has been blocked, the side window will close with increased or maximum force. The reversing function is then not active and body parts may become trapped.

▶ Make sure that no parts of the body are in the closing area.

▶ To stop the closing process, release the button or press the button again to reopen the side window.

A side window cannot be closed and you cannot see the cause.

▶ Check to see whether any objects are in the window guide.

▶ Adjust the side windows.

Adjusting the side windows

If a side window is obstructed during closing and reopens again immediately:

▶ Immediately after this, pull and hold the corresponding button again until the side window has closed and hold the button for at least one more second (re-adjustment).
The side window will be closed without the automatic reversing function.

If the side window is obstructed again and reopens again immediately:

▶ Immediately after this, pull and hold the corresponding button again until the side window has closed and hold the button for at least one more second (follow-up adjustment).
The side window will be closed without the automatic reversing function.

The side windows cannot be opened or closed using the convenience opening feature.

Possible causes:

- The key battery is weak or discharged.

▶ Check the battery using the indicator lamp (→ page 141).

▶ Replace the key battery, if necessary (→ page 144).

Sliding sunroof

Opening and closing the sliding sunroof

ⓘ The term "sliding sunroof" also refers to the panorama sliding sunroof.

⚠ **WARNING** Risk of becoming trapped when the sliding sunroof is being opened and closed

Body parts may become trapped in the range of movement.

▶ During opening and closing, make sure that no body parts are in the range of movement.

▶ Release the button immediately if somebody becomes trapped.

or

▶ Briefly press the button in any direction during automatic operation.
The opening or closing process will be stopped.

⚠ **WARNING** Risk of entrapment if the sliding sunroof is operated by children

Children operating the sliding sunroof could get caught in the moving parts, particularly if unattended.

▶ Never leave children unattended in the vehicle.

▶ When leaving the vehicle, always take the key with you and lock the vehicle.

⚠ **WARNING** Risk of becoming trapped when the roller sunblind is being opened and closed

Body parts may become trapped between the roller sunblind and frame or sliding roof.

▶ When opening or closing, make sure that no body parts are in the roller sunblind's range of movement.

▶ Release the button immediately if somebody becomes trapped.

or

▶ Briefly press the button in any direction during automatic operation.
The opening or closing process will be stopped.

! **NOTE** Malfunction due to snow and ice

Snow and ice may cause the sliding sunroof to malfunction.

▶ Open the sliding sunroof only if it is free of snow and ice.

NOTE Damage caused by protruding objects

Objects that protrude from the sliding sunroof may damage the seals.

▶ Do not allow anything to protrude from the sliding sunroof.

NOTE Damage to the panorama sliding sunroof due to non-approved roof luggage racks

The panorama sliding sunroof may be damaged by the roof luggage rack if you attempt to open it when using a roof luggage rack not tested and approved for Mercedes-Benz.

▶ When a roof luggage rack is fitted, open the panorama sliding sunroof only if this has been tested and approved for Mercedes-Benz.

The panorama sliding sunroof may be raised to allow ventilation of the vehicle interior.

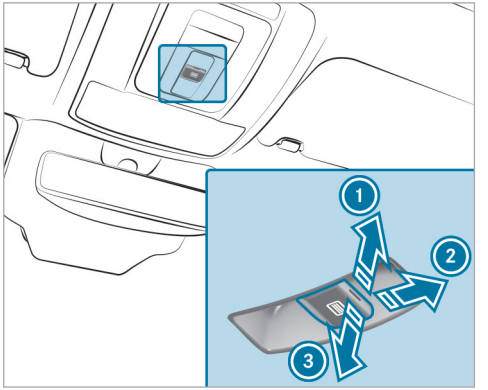

1. Raise
2. Open
3. Close/lower

Use the [≡] button to operate the panorama sliding sunroof and the roller sunblind.

The panorama sliding sunroof can be operated only when the roller sunblind is open.

▶ Check whether the sliding sunroof can be raised or opened when a roof luggage rack is fitted.

▶ **To start automatic operation:** press the [≡] button beyond the point of resistance or pull and release it.

▶ **To interrupt automatic operation:** briefly press the [≡] button in any direction.
The opening/closing process will be stopped.

Automatic reversing function of the sliding sunroof

If an obstacle obstructs the sliding sunroof during the closing process, the sliding sunroof will open again automatically. The automatic reversing function is only an aid and is not a substitute for your attentiveness.

▶ During the closing process, make sure that no body parts are in the closing area.

⚠ **WARNING** Risk of becoming trapped despite the reversing function being active

In particular, the reversing function does not react:

- to soft, light and thin objects, e.g. fingers.
- towards the end of the closing procedure.
- during resetting.

▶ During the closing process, make sure that no body parts are in the closing area.
▶ Release the button immediately if somebody becomes trapped.

or

▶ Briefly press the button in any direction during automatic operation.
The closing process will be stopped.

Automatic reversing function of the roller sunblind

If an obstacle obstructs the roller sunblind during the closing process, the roller sunblind will open again automatically. The automatic reversing function is only an aid and is not a substitute for your attentiveness.

▶ When closing the roller sunblind, make sure that no body parts are in the area of movement.

⚠ **WARNING** Risk of becoming trapped despite reversing function

In particular, the reversing function does not react to soft, light and thin objects, e.g. fingers.

▶ When closing the roller sunblind, make sure that no body parts are in the range of movement.
▶ Release the button immediately if somebody becomes trapped.

or

▶ Briefly press the button in any direction during the automatic closing process.
The closing process will be stopped.

Automatic functions of the sliding sunroof

ⓘ The term "sliding sunroof" also refers to the panorama sliding sunroof.

The sliding sunroof will be closed automatically when the vehicle has been switched off in the following situations:

- if it starts to rain
  Rain is detected by a rain sensor on the windscreen.
- in extreme temperatures
- after a certain time (depending on the onboard electrical system voltage)
- if there is a malfunction in the power supply

The sliding sunroof will rise at the rear in order to continue ventilating the vehicle interior.

If the sliding sunroof is obstructed during an automatic closing procedure, it will be opened again slightly. The automatic function for the sliding sunroof and the side windows will then be deactivated.

Rain closing function when driving
Vehicles with a panorama sliding sunroof: if it starts to rain, the raised sliding sunroof will automatically be lowered while the vehicle is in motion.

Automatic lowering function
Vehicles with a panorama sliding sunroof: if the sliding sunroof is raised at the rear, it will automatically be lowered slightly at higher speeds. At low speeds, it will be raised again automatically.

WARNING Risk of becoming trapped by automatic lowering of the sliding sunroof

At higher speeds, the raised sliding sunroof will automatically be lowered slightly at the rear.

- Make sure that nobody reaches into the sliding sunroof's range of movement while the vehicle is in motion.
- If somebody becomes trapped, briefly push the sliding sunroof button forwards or backwards.

ⓘ By pushing or pulling the button, you can interrupt the automatic functions "Rain closing function when driving" and "Automatic lowering".

Rectifying problems with the sliding sunroof

WARNING Risk of becoming trapped or fatal injuries when the sliding sunroof is closed again

If the sliding sunroof is closed again immediately after it has been blocked or reset, it will close with increased force.

- Make sure that no parts of the body are in the closing area.
- Release the button immediately if somebody becomes trapped.

or

- Briefly press the button in any direction during the automatic closing process.
  The closing process will be stopped.

The sliding sunroof cannot be closed and you cannot see the cause.

ⓘ The term "sliding sunroof" also refers to the panorama sliding sunroof.

If the sliding sunroof is obstructed during closing and reopens again slightly:

- Immediately after automatic reversing, pull and hold the button down again to the point of resistance until the sliding sunroof is closed.
  The sliding sunroof will be closed with increased force.

If the sliding sunroof is obstructed again and opens again slightly:

- Repeat the previous step.
  The sliding sunroof will be closed again with increased force.

Vehicles with a panorama sliding sunroof: the sliding sunroof or the roller sunblind is not operating smoothly.

- Reset the sliding sunroof and the roller sunblind.

Resetting the sliding sunroof and the roller sunblind

- Pull and hold the button little by little until the sliding sunroof is fully closed.
- Pull and hold the button little by little until the roller sunblind is fully closed.
- Use automatic operation to fully open and then close the sliding sunroof.

Anti-theft protection

Function of the immobiliser

The immobiliser prevents your vehicle from being started without the correct key.

The immobiliser is automatically activated when the vehicle is switched off, and deactivated when the vehicle is switched on.

ATA (Anti-Theft Alarm system)

Function of the ATA system

If the ATA system is primed, a visual and audible alarm is triggered in the following situations:

- when a door is opened
- when the boot lid is opened
- when the bonnet is opened
- when interior protection is triggered (→ page 162)
- when tow-away protection is triggered (→ page 162)

The ATA system is primed automatically after approximately ten seconds in the following situations:

- After locking the vehicle with the key
- After locking the vehicle using KEYLESS-GO

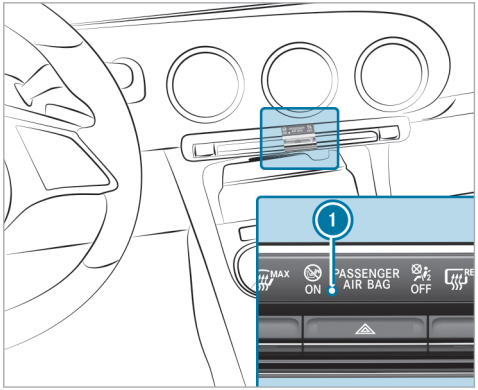

Indicator lamp 1 flashes when the ATA system is primed.

The ATA system is deactivated automatically in the following situations:

- after unlocking the vehicle with the key
- After unlocking the vehicle using KEYLESS-GO

- after pressing the start/stop button with the key in the storage compartment (→ page 234)

Deactivating the ATA

▶ Press the [ ], [ ] or [ ] button on the key.

or

▶ Press the start/stop button with the key in the stowage compartment (→ page 234)

Deactivating the alarm using KEYLESS-GO

▶ Grasp the outside door handle with the key outside the vehicle.

Function of tow-away protection

An audible and visual alarm is triggered if an alteration to your vehicle's angle of inclination is detected while tow-away protection is primed.

Tow-away protection is automatically primed after about 60 seconds:

- After locking the vehicle with the key
- After locking the vehicle using KEYLESS-GO

Tow-away protection is only primed when the following components are closed:

- Doors
- Trunk lid

Tow-away protection is automatically deactivated:

- After pressing the [ ] or [ ] button on the key
- After pressing the start/stop button with the key in the storage compartment (→ page 234)
- After unlocking the vehicle using KEYLESS-GO
- When using HANDS-FREE ACCESS

Information on collision detection on a parked vehicle (→ page 300).

Priming/deactivating tow-away protection

Multimedia system:

→ [ ] ▸▸ Settings ▸▸ Vehicle ▸▸ Opening/closing ▸▸ Vehicle protection

▶ Prime or deactivate Tow-away protection.

Tow-away protection is primed again in the following cases:

- The vehicle is unlocked again.
- A door is opened.
- The vehicle is locked again.

Function of interior protection

When interior protection is primed, a visual and audible alarm is triggered if movement is detected in the vehicle interior.

Interior protection is primed automatically after approximately ten seconds:

- after locking the vehicle with the key
- after locking the vehicle using KEYLESS-GO

Interior protection is only primed when the following components are closed:

- Doors
- Boot lid

Interior protection is automatically deactivated:

- after pressing the [ ] or [ ] button on the key
- after pressing the start/stop button with the key in the stowage compartment (→ page 234)
- after unlocking the vehicle using KEYLESS-GO
- when using HANDS-FREE ACCESS

The following situations can lead to a false alarm:

- when there are moving objects suchas mascots in the vehicle interior
- if a side window is open
- if the panoramic sunroof is open

Priming/deactivating interior protection

Multimedia system:

→ [ ] ▸▸ Settings ▸▸ Vehicle ▸▸ Opening/closing ▸▸ Vehicle protection

▶ Prime or deactivate Interior motion sensor.

Interior protection is primed again in the following cases:

- The vehicle is unlocked again.
- A door is opened.
- The vehicle is locked again.

Notes on the correct driver's seat position

⚠ **WARNING** Risk of accident due to adjusting the vehicle settings while the vehicle is in motion

You could lose control of the vehicle in the following situations in particular:

- if you adjust the driver's seat, the head restraint, the steering wheel or the mirror while the vehicle is in motion
- if you fasten your seat belt while the vehicle is in motion

▶ Before starting the vehicle: in particular, adjust the driver's seat, head restraint, steering wheel and mirror, and fasten your seat belt.

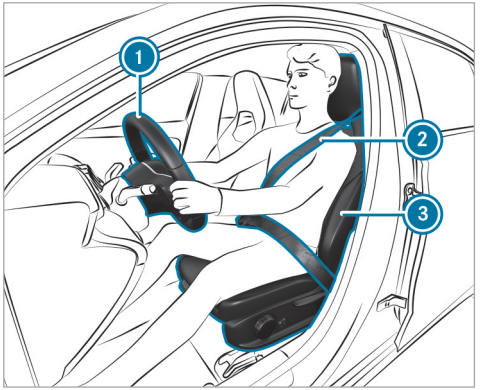

Ensure the following when adjusting steering wheel ①, seat belt ② and driver's seat ③:

- You are sitting as far away from the driver's airbag as possible, taking the following points into consideration:
- You are sitting in an upright position
- Your thighs are slightly supported by the seat cushion
- Your legs are not fully extended and you can depress the pedals properly
- The back of your head is supported at eye level by the centre of the head restraint
- You can hold the steering wheel with your arms slightly bent
- You can move your legs freely
- You can see all the indicators on the driver's display clearly
- You have a good overview of the traffic conditions
- Observe the notes on correctly fastening the seat belt (→ page 100).

Vehicles with AMG Performance seats: if the front passenger seat is unoccupied, this may lead to noise caused by the seat belt tongue knocking against the seat. You can prevent this by sliding the seat belt tongue upwards with the seat belt adjuster clip. When the front passenger seat is occupied again, ensure that the seat belt adjuster clip is pushed down. Only then will the seat belt fit snugly against the body.

Notes on grab handles

⚠ **WARNING** Risk of injury due to excessive load on the grab handles

If you apply your full body weight to the grab handle or pull it abruptly, the grab handle may be damaged or come loose from its anchorage. This may result in injuries.

▶ Use the grab handles only to stabilise the seating position or to assist in getting in and out of the seat.

Seats

Adjusting the front seat mechanically (without Seat Comfort Package)

⚠ **WARNING** Risk of becoming trapped if the seats are adjusted by children

Children could become trapped if they adjust the seats, particularly when unattended.

▶ When leaving the vehicle, always take the key with you and lock the vehicle.

▶ Never leave children unattended in the vehicle.

This also applies to the Digital Vehicle Key.

⚠ **WARNING** Risk of becoming trapped during seat adjustment

When you adjust a seat, you or other vehicle occupants could become trapped, e.g. on the seat guide rail.

▶ Make sure when adjusting a seat that no one has any body parts in the sweep of the seat.

Observe the safety notes on "Airbags" and "Children in the vehicle".

⚠ **WARNING** Risk of accident due to the driver's seat not being engaged

The driver's seat may move unexpectedly while driving.

This could cause you to lose control of the vehicle.

▶ Always make sure that the driver's seat is engaged before starting the vehicle.

⚠ **WARNING** Risk of accident due to adjusting the vehicle settings while the vehicle is in motion

You could lose control of the vehicle in the following situations in particular:

- if you adjust the driver's seat, the head restraint, the steering wheel or the mirror while the vehicle is in motion
- if you fasten your seat belt while the vehicle is in motion

▶ Before starting the vehicle: in particular, adjust the driver's seat, head restraint, steering wheel and mirror, and fasten your seat belt.

WARNING Risk of becoming trapped if the seat height is adjusted carelessly

If you adjust the seat height carelessly, you or other vehicle occupants could be trapped and thereby injured.

Children in particular could accidentally press the electrical seat adjustment buttons and become trapped.

- While moving the seats, make sure that hands or other body parts do not get under the lever assembly of the seat adjustment system.

WARNING Risk of injury due to head restraints not being fitted or being adjusted incorrectly

If head restraints have not been installed or have not been adjusted correctly, there is an increased risk of injury in the head and neck area, e.g. in the event of an accident or when braking.

- Always drive with the head restraints fitted.
- Before driving off, make sure for every vehicle occupant that the centre of the head restraint supports the back of the head at about eye level.

Do not interchange the head restraints of the front and rear seats. Otherwise, you will not be able to adjust the height and angle of the head restraints correctly.

Adjust the head restraint fore-and-aft position so that it is as close as possible to the back of your head.

WARNING Risk of injury or death due to incorrect seat position

The seat belt will not offer the intended level of protection if you have not moved the seat backrest to an almost vertical position.

In particular, you may slip under the seatbelt and injure yourself.

- Adjust the seat properly before beginning your journey.
- Always ensure that the seat backrest is in an almost vertical position and that the shoulder section of your seat belt is routed across the centre of your shoulder.

WARNING Risk of injury due to excessive load on the grab handles

If you apply your full body weight to the grab handle or pull it abruptly, the grab handle may be damaged or come loose from its anchorage. This may result in injuries.

- Use the grab handles only to stabilise the seating position or to assist in getting in and out of the seat.

WARNING Risk of potentially fatal injuries due to objects trapped under the front passenger seat

Objects trapped under the front passenger seat may interfere with the function of the automatic front passenger airbag shutoff or damage the system.

- Do not stow any objects under the front passenger seat.
- When the front passenger seat is occupied, ensure that no objects have become trapped beneath the front passenger seat.

Adjusts the seat fore-and-aft position

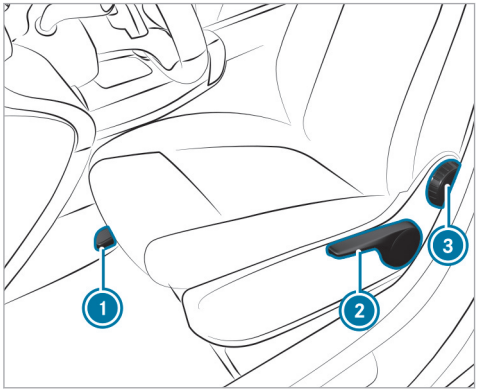

- Lift lever ① and slide the seat into the desired position.
- Make sure that the seat is engaged.

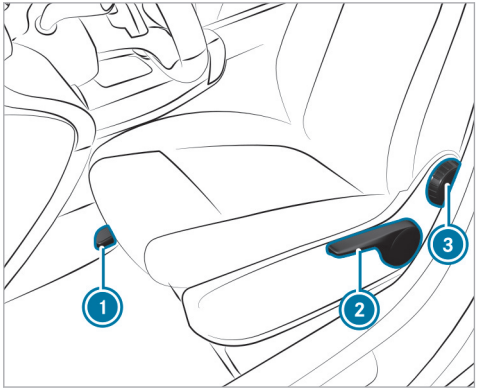

- **To adjust the seat height:** push or pull lever ② until the desired position has been reached.
- **To adjust the seat backrest inclination:** turn handwheel ③ forwards and backwards until the desired position has been reached.

Adjusting the front seat mechanically (with Seat Comfort Package)

WARNING Risk of becoming trapped if the seats are adjusted by children

Children could become trapped if they adjust the seats, particularly when unattended.

- When leaving the vehicle, always take the key with you and lock the vehicle.
- Never leave children unattended in the vehicle.

This also applies to the Digital Vehicle Key.

WARNING Risk of becoming trapped during seat adjustment

When you adjust a seat, you or other vehicle occupants could become trapped, e.g. on the seat guide rail.

- Make sure when adjusting a seat that no one has any body parts in the sweep of the seat.

Observe the safety notes on "Airbags" and "Children in the vehicle".

WARNING Risk of accident due to the driver's seat not being engaged

The driver's seat may move unexpectedly while driving.

This could cause you to lose control of the vehicle.

- Always make sure that the driver's seat is engaged before starting the vehicle.

WARNING Risk of accident due to adjusting the vehicle settings while the vehicle is in motion

You could lose control of the vehicle in the following situations in particular:

- if you adjust the driver's seat, the head restraint, the steering wheel or the mirror while the vehicle is in motion
- if you fasten your seat belt while the vehicle is in motion

- Before starting the vehicle: in particular, adjust the driver's seat, head restraint, steering wheel and mirror, and fasten your seat belt.

WARNING Risk of becoming trapped if the seat height is adjusted carelessly

If you adjust the seat height carelessly, you or other vehicle occupants could be trapped and thereby injured.

Children in particular could accidentally press the electrical seat adjustment buttons and become trapped.

- While moving the seats, make sure that hands or other body parts do not get under the lever assembly of the seat adjustment system.

WARNING Risk of injury due to head restraints not being fitted or being adjusted incorrectly

If head restraints have not been installed or have not been adjusted correctly, there is an increased risk of injury in the head and neck area, e.g. in the event of an accident or when braking.

- Always drive with the head restraints fitted.
- Before driving off, make sure for every vehicle occupant that the centre of the head restraint supports the back of the head at about eye level.

Do not interchange the head restraints of the front and rear seats. Otherwise, you will not be able to adjust the height and angle of the head restraints correctly.

Adjust the head restraint fore-and-aft position so that it is as close as possible to the back of your head.

WARNING Risk of injury or death due to incorrect seat position

The seat belt will not offer the intended level of protection if you have not moved the seat backrest to an almost vertical position.

In particular, you may slip under the seatbelt and injure yourself.

- Adjust the seat properly before beginning your journey.
- Always ensure that the seat backrest is in an almost vertical position and that the shoulder section of your seat belt is routed across the centre of your shoulder.

WARNING Risk of injury due to excessive load on the grab handles

If you apply your full body weight to the grab handle or pull it abruptly, the grab handle may be damaged or come loose from its anchorage. This may result in injuries.

- Use the grab handles only to stabilise the seating position or to assist in getting in and out of the seat.

WARNING Risk of potentially fatal injuries due to objects trapped under the front passenger seat

Objects trapped under the front passenger seat may interfere with the function of the automatic front passenger airbag shutoff or damage the system.

- Do not stow any objects under the front passenger seat.
- When the front passenger seat is occupied, ensure that no objects have become trapped beneath the front passenger seat.

Adjusts the seat fore-and-aft position

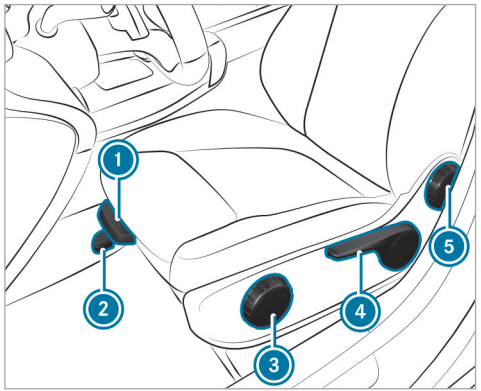

- Lift lever ② and slide the seat into the desired position.
- Make sure that the seat is engaged.

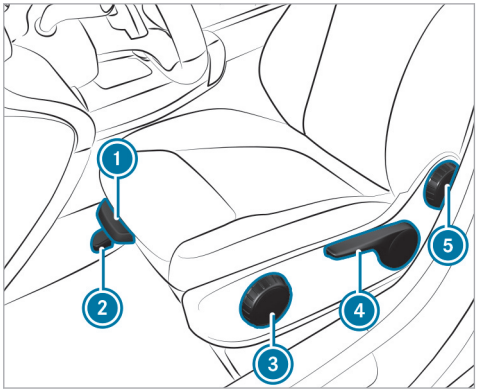

- **To adjust the seat cushion length (driver's seat only):** lift lever ① and slide the front section of the seat cushion forwards or backwards.
- **To adjust the seat cushion inclination:** turn handwheel ③ forwards and backwards until the desired position has been reached.
- **To adjust the seat height:** push or pull lever ④ until the desired position has been reached.
- **To adjust the seat backrest inclination:** turn handwheel ⑤ forwards and backwards until the desired position has been reached.

Adjusting the front seat electrically

WARNING Risk of becoming trapped if the seats are adjusted by children

Children could become trapped if they adjust the seats, particularly when unattended.

- When leaving the vehicle, always take the key with you and lock the vehicle.
- Never leave children unattended in the vehicle.

You can adjust the seats when the vehicle is switched off.

WARNING Risk of becoming trapped during seat adjustment

When you adjust a seat, you or other vehicle occupants could become trapped, e.g. on the seat guide rail.

▶ Make sure when adjusting a seat that no one has any body parts in the sweep of the seat.

Observe the safety notes on "Airbags" and "Children in the vehicle".

⚠ **WARNING** Risk of accident due to adjusting the vehicle settings while the vehicle is in motion

You could lose control of the vehicle in the following situations in particular:

- if you adjust the driver's seat, the head restraint, the steering wheel or the mirror while the vehicle is in motion
- if you fasten your seat belt while the vehicle is in motion

▶ Before starting the vehicle: in particular, adjust the driver's seat, head restraint, steering wheel and mirror, and fasten your seat belt.

⚠ **WARNING** Risk of becoming trapped if the seat height is adjusted carelessly

If you adjust the seat height carelessly, you or other vehicle occupants could be trapped and thereby injured.

Children in particular could accidentally press the electrical seat adjustment buttons and become trapped.

▶ While moving the seats, make sure that hands or other body parts do not get under the lever assembly of the seat adjustment system.

⚠ **WARNING** Risk of injury due to head restraints not being fitted or being adjusted incorrectly

If head restraints have not been installed or have not been adjusted correctly, there is an increased risk of injury in the head and neck area, e.g. in the event of an accident or when braking.

▶ Always drive with the head restraints fitted.

▶ Before driving off, make sure for every vehicle occupant that the centre of the head restraint supports the back of the head at about eye level.

Do not interchange the head restraints of the front and rear seats. Otherwise, you will not be able to adjust the height and angle of the head restraints correctly.

Adjust the head restraint fore-and-aft position so that it is as close as possible to the back of your head.

⚠ **WARNING** Risk of injury or death due to incorrect seat position

The seat belt will not offer the intended level of protection if you have not moved the seat backrest to an almost vertical position.

In particular, you may slip under the seatbelt and injure yourself.

- Adjust the seat properly before beginning your journey.
- Always ensure that the seat backrest is in an almost vertical position and that the shoulder section of your seat belt is routed across the centre of your shoulder.

WARNING Risk of injury due to excessive load on the grab handles

If you apply your full body weight to the grab handle or pull it abruptly, the grab handle may be damaged or come loose from its anchorage. This may result in injuries.

- Use the grab handles only to stabilise the seating position or to assist in getting in and out of the seat.

WARNING Risk of potentially fatal injuries due to objects trapped under the front passenger seat

Objects trapped under the front passenger seat may interfere with the function of the automatic front passenger airbag shutoff or damage the system.

- Do not stow any objects under the front passenger seat.
- When the front passenger seat is occupied, ensure that no objects have become trapped beneath the front passenger seat.

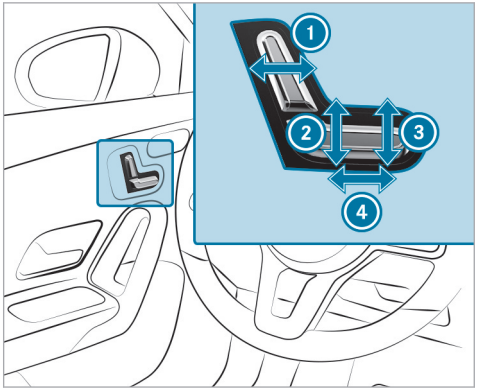

1. Seat backrest inclination
2. Seat height
3. Seat cushion inclination
4. Seat fore-and-aft position

- Save the settings with the memory function (→ page 181).

Adjusting the 4-way lumbar support

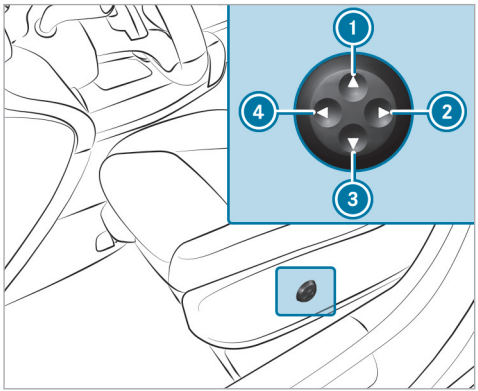

1. Higher
2. Softer
3. Lower
4. Firmer

▶ Use buttons 1 to 4 to adjust the contour of the backrest.

Switching the seat ventilation of the AMG Performance seats on or off

Requirements

- The power supply is switched on.

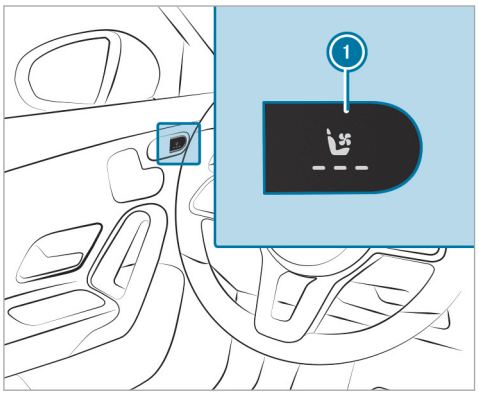

▶ Press button 1 repeatedly until the desired blower setting has been reached.
Depending on the blower setting, up to three indicator lamps will light up. If all indicator lamps are off, the seat ventilation is switched off.

Head restraints

Adjusting the front seat head restraints manually

⚠ **WARNING** Risk of accident due to adjusting the vehicle settings while the vehicle is in motion

You could lose control of the vehicle in the following situations in particular:

- if you adjust the driver's seat, the head restraint, the steering wheel or the mirror while the vehicle is in motion
- if you fasten your seat belt while the vehicle is in motion

▶ Before starting the vehicle: in particular, adjust the driver's seat, head restraint, steering wheel and mirror, and fasten your seat belt.

WARNING Risk of injury due to head restraints not being fitted or being adjusted incorrectly

If head restraints have not been installed or have not been adjusted correctly, there is an increased risk of injury in the head and neck area, e.g. in the event of an accident or when braking.

- Always drive with the head restraints fitted.
- Before driving off, make sure for every vehicle occupant that the centre of the head restraint supports the back of the head at about eye level.

Do not interchange the head restraints of the front and rear seats. Otherwise, you will not be able to adjust the height and angle of the head restraints correctly.

Adjust the head restraint fore-and-aft position so that it is as close as possible to the back of your head.

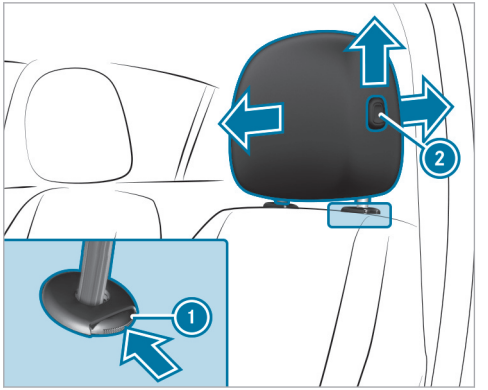

- **To raise:** pull the head restraint up.
- **To lower:** press release knob 1 in the direction of the arrow and push the head restraint down.
- **To move forwards:** press release knob 2 and pull the head restraint forwards.
- **To move backwards:** press release knob 2 and push the head restraint backwards.

Adjusting the head restraints of the rear seats manually

WARNING Risk of injury due to head restraints not being fitted or being adjusted incorrectly

If head restraints have not been installed or have not been adjusted correctly, there is an increased risk of injury in the head and neck area, e.g. in the event of an accident or when braking.

- Always drive with the head restraints fitted.
- Before driving off, make sure for every vehicle occupant that the centre of the head restraint supports the back of the head at about eye level.

Do not interchange the head restraints of the front and rear seats. Otherwise, you will not be able to adjust the height and angle of the head restraints correctly.

Adjust the head restraint fore-and-aft position so that it is as close as possible to the back of your head.

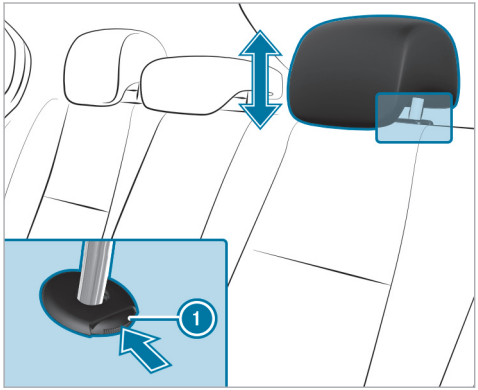

- **To raise:** pull the head restraint up.
- **To lower:** press release button (1) and push the head restraint down.

Fitting/removing the rear seat head restraints

WARNING Risk of injury due to head restraints not being fitted or being adjusted incorrectly

If head restraints have not been installed or have not been adjusted correctly, there is an increased risk of injury in the head and neck area, e.g. in the event of an accident or when braking.

- Always drive with the head restraints fitted.
- Before driving off, make sure for every vehicle occupant that the centre of the head restraint supports the back of the head at about eye level.

Do not interchange the head restraints of the front and rear seats. Otherwise, you will not be able to adjust the height and angle of the head restraints correctly.

Adjust the head restraint fore-and-aft position so that it is as close as possible to the back of your head.

Removing

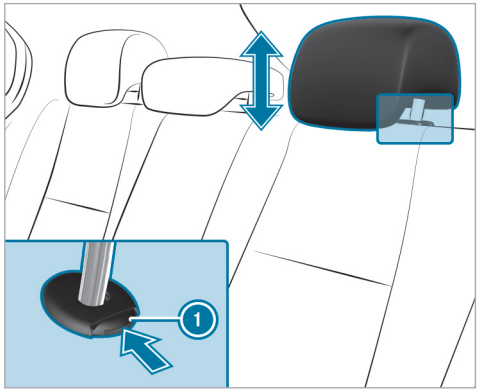

- Release the rear seat backrest and fold it forwards slightly (→ page 37).
- Pull the head restraint upwards as far as it will go.
- Push release knob (1) in the direction of the arrow and pull out the head restraint.

Fitting

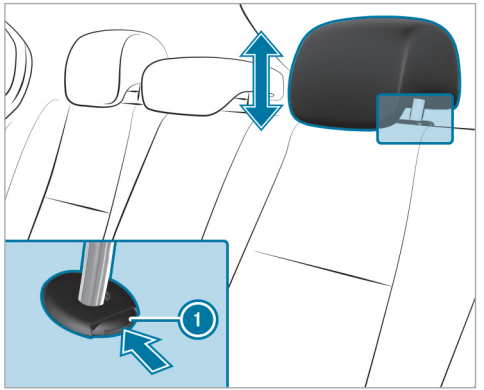

- Insert the head restraint such that the notches on the bar are on the left when viewed in the direction of travel.
- Push the head restraint down until it engages.
- Fold the rear seat backrest back until it engages.

Setting automatic seat adjustment

WARNING Risk of becoming trapped during adjustment of the driver's seat after calling up a driver profile

Selecting a user profile may trigger an adjustment of the driver's seat to the position saved under the user profile. You or other vehicle occupants could be injured in the process.

- Make sure that when the position of driver's seat is being adjusted using the multimedia system, no people or body parts are in the seat's range of movement.

If there is a risk of someone becoming trapped, immediately stop the adjustment process by:

- a) Pressing the warning message on the central display.

or

- b) Pressing a position button of the memory function or a seat adjustment switch in the driver's door.
  The adjustment process is stopped.

Multimedia system:

→ ⌂ ▸▸ Comfort ▸▸ Seat ▸▸ Position seat automatically

Manually adjusting driver's seat and steering wheel position to body size

The vehicle calculates a suitable driver's seat and steering wheel position on the basis of the driver's body size and sets this directly.

- **To set the unit of measurement:** select cm or ft/in.
- Set the size using the scale.
- Select Start positioning.
  The driver's seat and steering wheel position is adjusted to the body size that has been set.

ⓘ You can also configure these settings via the Mercedes me user account for your user profile. By synchronising the profiles in the vehicle and the Mercedes me connect profiles, you can carry over these settings for your vehicle. Further information about synchronising user profiles (→ page 423).

ⓘ If the driver's seat and steering wheel position calculated by the vehicle is not practical or comfortable, it can be manually adapted at any time via the control buttons.
The outside mirrors are not set via this function. Instead, they have to be set manually via the operating switches.

Resetting seat settings

Multimedia system:

→ [⌂] ▸▸ Comfort ▸▸ Seat

▶ Select Reset.

▶ Select [↻] for the desired seat.
The settings for the selected seat are reset.

Switching the seat heating on/off

⚠ **WARNING** Risk of burns due to repeatedly switching on the seat heating

Repeatedly switching on the seat heating can cause the seat cushion and seat backrest padding to become very hot.

In particular, the health of persons with limited temperature sensitivity or a limited ability to react to high temperatures may be affected or they may even suffer burn-like injuries.

▶ Do not repeatedly switch on the seat heating.

To protect against overheating, the seat heating may be temporarily deactivated after it has been switched on repeatedly.

! **NOTE** Damage to the seats caused by objects or documents when the seat heater is switched on

When the seat heater is switched on, overheating may occur due to objects or documents placed on the seats e.g. seat cushions or child seats. This could cause damage to the seat surface.

▶ Make sure that no objects or documents are on the seats when the seat heater is switched on.

Requirements

- The power supply is switched on.

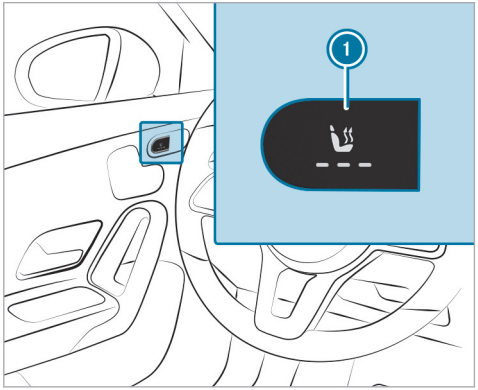

▶ Press button ① repeatedly until the desired heating level is set.
Depending on the heating level, up to three indicator lamps will light up. If all indicator lamps are off, the seat heating is switched off.

ⓘ The seat heating will automatically switch down from the three heating levels after 8, 10 and 20 minutes until the seat heating switches off.

Steering wheel

Adjusting the steering wheel manually

⚠ **WARNING** Risk of accident due to adjusting the vehicle settings while the vehicle is in motion

You could lose control of the vehicle in the following situations in particular:

- if you adjust the driver's seat, the head restraint, the steering wheel or the mirror while the vehicle is in motion
- if you fasten your seat belt while the vehicle is in motion

▶ Before starting the vehicle: in particular, adjust the driver's seat, head restraint, steering wheel and mirror, and fasten your seat belt.

⚠ **WARNING** Risk of entrapment for children when adjusting the steering wheel

Children could injure themselves if they adjust the steering wheel.

▶ Never leave children unattended in the vehicle.

▶ When leaving the vehicle, always take the key with you and lock the vehicle.

Unlocking

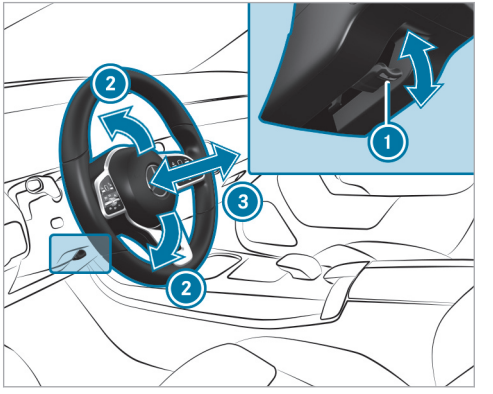

▶ Fold release lever ① down as far as it will go.

▶ Adjust height ② and distance ③ to the steering wheel.

Locking

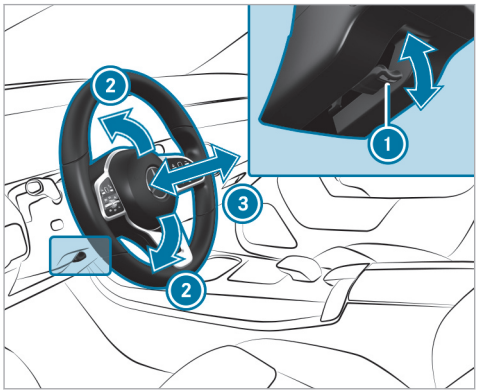

- Fold release lever ① up as far as it will go.
- Check and make sure that the steering column is locked by moving the steering wheel.

Switching the steering wheel heater on/off

Depending on the vehicle version, the steering wheel heater can be switched on/off via a switch on the steering wheel.

Requirements:

- The vehicle is switched on.

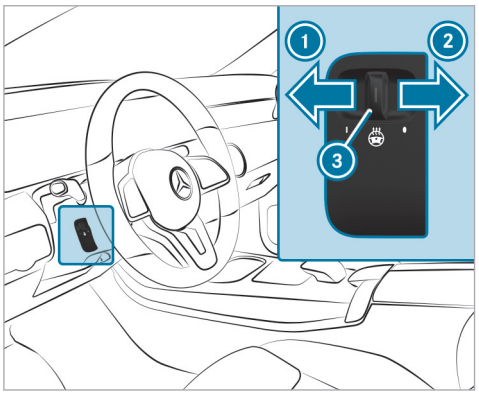

- **To switch on:** push the switch to position ①. If the indicator lamp ③ lights up, the steering wheel heater is switched on.
- **To switch off:** push the switch to position ②.

When you switch the vehicle off, the steering wheel heater will switch off.

Easy entry and exit feature

Using the easy entry and exit feature

WARNING Risk of accident when pulling away during the adjustment process of the easy entry and exit feature

You could lose control of the vehicle.

- Always wait until the adjustment process is complete before driving off.

WARNING Risk of becoming trapped during adjustment of the easy entry and exit feature

You and other vehicle occupants could become trapped.

▶ Ensure that no-one has any body parts in the range of movement of the seat.

If there is a risk of becoming trapped by the driver's seat:

▶ Press the seat adjustment switch.
The adjustment process will be stopped.

You can stop the adjustment process by pressing one of the memory function position switches.

WARNING Risk of becoming trapped if children activate the easy entry and exit feature

Children could become trapped if they activate the easy entry and exit feature, particularly when unattended.

▶ Never leave children unattended in the vehicle.

▶ When leaving the vehicle, always take the key with you and lock the vehicle.

When the easy entry and exit feature is active, the driver's seat will move into an ideal position for getting in or out of the vehicle and the seat backrest will be moved to a more upright position if:

- you switch off the vehicle when the driver's door is open.
- you open the driver's door when the vehicle is switched off.

ⓘ The driver's seat will only move forwards or backwards if it is not already in the ideal position for getting in or out of the vehicle.
The seat backrest will then move forwards only if it is not already at the front of the backrest adjustment range.

The driver's seat will move back to the last drive position if:

- you switch the vehicle on when the driver's door is closed.
- you close the driver's door when the vehicle is switched on.

The last drive position will be saved when:

- you switch off the vehicle.
- you call up the seat settings via the memory function.
- you save the seat settings via the memory function.

Setting the easy entry and exit feature

Requirements

- The automatic seat adjustment has been activated (→ page 176).

Multimedia system:

⌐→ ⌂ ▸▸ Settings ▸▸ Vehicle ▸▸ Comfort ▸▸ Easy entry and exit feature

▶ Select Steering wheel and seat, Steering wheel only or Off.

ⓘ If you are using an individual user profile, this information is used for the easy entry and exit feature. This will cause the driver's seat and steering wheel to move into the correct position automatically (→ page 420).

Memory function

Memory function

WARNING Risk of an accident if the memory function is used while driving

If you use the memory function on the driver's side while driving, you could lose control of the vehicle as a result of the adjustments being made.

▶ Only use the memory function on the driver's side when the vehicle is stationary.

WARNING Risk of entrapment when adjusting the seat with the memory function

When the memory function adjusts the seat, you and other vehicle occupants – particularly children – could become trapped.

▶ During the adjustment process of the memory function, make sure that no one has any body parts in the sweep of the seat.

▶ If someone becomes trapped, press a preset position button or seat adjustment switch immediately.

WARNING Danger of entrapment when memory function is activated by children

When children activate the memory function, they can get trapped, especially if they are unsupervised.

▶ Never leave children unattended in the vehicle.

▶ When leaving the vehicle, always take the key with you and lock the vehicle.

You can use the memory function when the vehicle is switched off.
Seat adjustments for up to three people can be stored and called up using the memory function.

You can save settings for the following systems:

- Seat
- Seat contour
- Outside mirrors

Operating the memory function

WARNING Risk of an accident if the memory function is used while driving

If you use the memory function on the driver's side while driving, you could lose control of the vehicle as a result of the adjustments being made.

▶ Only use the memory function on the driver's side when the vehicle is stationary.

WARNING Risk of entrapment when adjusting the seat with the memory function

When the memory function adjusts the seat, you and other vehicle occupants – particularly children – could become trapped.

▶ During the adjustment process of the memory function, make sure that no one

has any body parts in the sweep of the seat.

- If someone becomes trapped, press a preset position button or seat adjustment switch immediately.

WARNING Danger of entrapment when memory function is activated by children

When children activate the memory function, they can get trapped, especially if they are unsupervised.

- Never leave children unattended in the vehicle.
- When leaving the vehicle, always take the key with you and lock the vehicle.

You can use the memory function when the ignition is switched off.

Storing

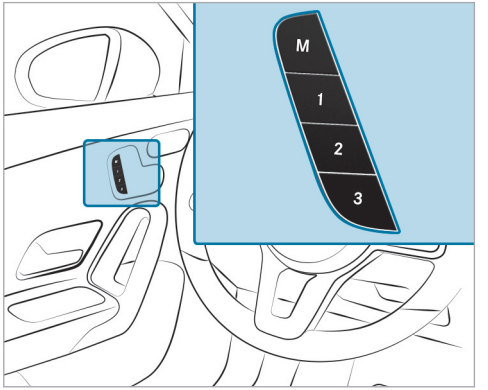

- Set the desired position for all systems.
- Briefly press memory button M and then press preset position 1, 2 or 3 within three seconds.

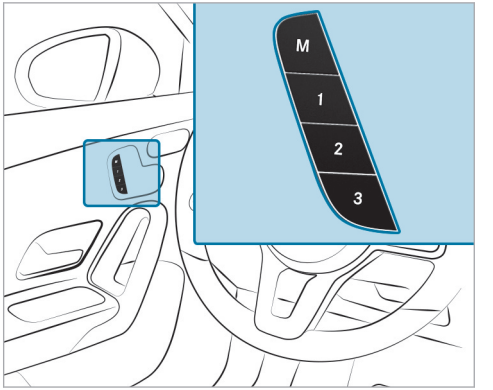

- **To call up:** press and briefly hold one of preset position buttons 1, 2 or 3. After releasing the button, all systems are moved into the stored position.

Stowage areas

Notes on loading the vehicle

DANGER Risk of exhaust gas poisoning

Combustion engines emit poisonous exhaust gases such as carbon monoxide. Exhaust gases can enter the vehicle interior if the boot lid is open when the engine is running, especially if the vehicle is in motion.

- Always switch off the engine before opening the boot lid.
- Never drive with the boot lid open.

Objects in the deployment area of an airbag may prevent the airbag from functioning correctly. Observe the notes on airbags (→ page 114) .

WARNING Risk of injury from unsecured items in the vehicle

If objects, luggage or loads are not secured or not secured sufficiently, they could slip, tip over or be thrown around and thereby hit vehicle occupants.

There is a risk of injury, particularly in the event of sudden braking or a sudden change in direction.

- Always stow objects in such a way that they cannot be thrown around.
- Before the journey, secure objects, luggage or loads against slipping or tipping over.

WARNING Risk of injury due to objects being stowed incorrectly

If objects in the vehicle interior are stowed incorrectly, they can slide or be thrown around and hit vehicle occupants. In addition, cup holders, open stowage spaces and mobile phone brackets cannot always retain all objects they contain.

There is a risk of injury, particularly in the event of sudden braking or a sudden change in direction.

- Always stow objects in such a way that they cannot be thrown around in such situations.
- Always make sure that objects do not protrude from stowage spaces, luggage nets or stowage nets.
- Close the lockable stowage spaces before starting a journey.
- Always stow and secure heavy, hard, pointed, sharp-edged, fragile or bulky objects in the boot.

WARNING Risk of accident from objects in the driver's footwell and front-passenger footwell

Objects in the driver's footwell and front-passenger footwell may impede pedal travel or block a depressed pedal.

This jeopardises the operating and road safety of the vehicle.

- Stow all objects in the vehicle securely so that they cannot get into the driver's footwell or front-passenger footwell.
- Always fit the floor mats securely and as prescribed in order to ensure that there

is always sufficient clearance for the pedals.

▶ Do not use loose floor mats and do not lay multiple floor mats on top of one another.

Vehicles with automatic front passenger airbag shutoff: Objects trapped under the front passenger seat may interfere with the function of the automatic front passenger airbag shutoff or damage the system. Therefore observe the notes on the function of the automatic front passenger airbag shutoff (→ page 104).

⚠ **WARNING** Risk of burns from the tailpipe and tailpipe trims

The exhaust tailpipe and tailpipe trims can become very hot. If you come into contact with these parts of the vehicle, you could burn yourself.

▶ Always be particularly careful around the tailpipe and the tailpipe trims and supervise children especially closely in this area.

▶ Allow vehicle parts to cool down before touching them.

ⓘ Leather is a natural product. It has natural surface properties, such as differences in structure, marks caused by growth and injury or subtle colour differences. These surface properties are special features of leather and not material defects. Also, leather is subject to a natural ageing process in which the surface properties change.

The driving characteristics of your vehicle are dependent on the distribution of the load within the vehicle. You should bear the following in mind when loading the vehicle:

- never exceed the maximum permissible gross mass or the permissible axle loads for the vehicle (including occupants).

  See the information on the vehicle identification plate (→ page 734).
- the load must not protrude above the upper edge of the seat backrests.
- always place the load behind unoccupied seats if possible.
- secure the load using the lashing eyelets and distribute the load evenly.

Notes on driving with a roof load

- Distribute roof load and vehicle load evenly and place heavy objects towards the bottom. (→ page 183)Also observe the notes on loading the vehicle in this regard.
- Drive carefully, avoid abrupt starting off, braking and steering and fast cornering.
- When transporting a roof load and with a fully laden or fully occupied vehicle, select one of the drive programs E or C. These have an emphasis on stability (→ page 251).

ⓘ For more information on storage compartments and stowage facilities, please refer to the Digital Owner's Manual.

Stowage spaces in the vehicle interior

Overview of the front storage compartments

WARNING Risk of injury due to objects being stowed incorrectly

If objects in the vehicle interior are stowed incorrectly, they can slide or be thrown around and hit vehicle occupants. In addition, cup holders, open stowage spaces and mobile phone receptacles cannot always retain all objects within.

There is a risk of injury, particularly in the event of sudden braking or a sudden change in direction.

- Always stow objects so that they cannot be thrown around in such situations.
- Always make sure that objects do not protrude from stowage spaces, luggage nets or stowage nets.
- Close the lockable stowage spaces before starting a journey.
- Always stow and secure heavy, hard, pointed, sharp-edged, fragile or bulky objects in the boot/load compartment.

Observe the notes on loading the vehicle.

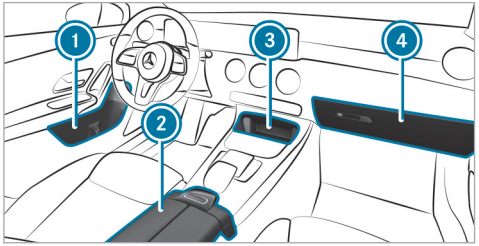

1. Stowage spaces in the doors
2. Storage compartment in the armrest with a multimedia and USB connection
3. Storage compartment in the front centre console with a USB port
4. Glove compartment

Opening the stowage compartment for customer documents in the glove compartment

WARNING Risk of injury due to objects being stowed incorrectly

If objects in the vehicle interior are stowed incorrectly, they can slide or be thrown around and hit vehicle occupants. In addition, cup holders, open stowage spaces and mobile phone brackets cannot always retain all objects they contain.

There is a risk of injury, particularly in the event of sudden braking or a sudden change in direction.

- Always stow objects in such a way that they cannot be thrown around in such situations.
- Always make sure that objects do not protrude from stowage spaces, luggage nets or stowage nets.
- Close the lockable stowage spaces before starting a journey.

▶ Always stow and secure heavy, hard, pointed, sharp-edged, fragile or bulky objects in the boot.

Observe the notes on loading the vehicle.

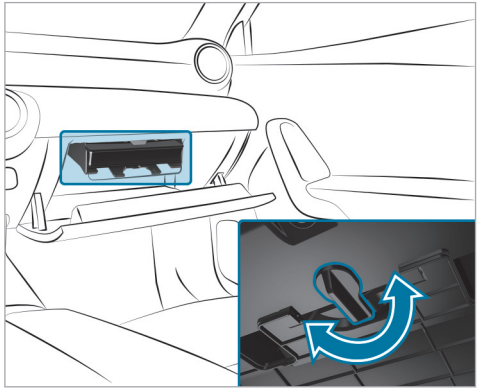

▶ **To open:** turn the handle to the left or right.

Through-loading feature in the rear bench seat (EASY-PACK Quickfold)

Folding the rear seat backrest forwards

⚠ **WARNING** Risk of accident if the rear bench seat, rear seat and seat backrest are not engaged

The rear bench seat, rear seat and seat backrest may fold forwards, even while the vehicle is in motion.

- As a result, the vehicle occupant will be pressed into the seat belt with increased force. The seat belt will not be able to protect as intended and could cause additional injury.
- Objects or loads in the boot or load compartment cannot be restrained by the seat backrest.

▶ Make sure that the rear bench seat, the rear seat and the seat backrest are engaged before every trip.

If the seat backrests are not engaged and locked in place, the lock verification indicator will be red.

Requirements

- To fold the centre seat backrest forwards: the centre seat backrest has been unlocked.

You can fold the centre and outer seat backrests forwards separately.

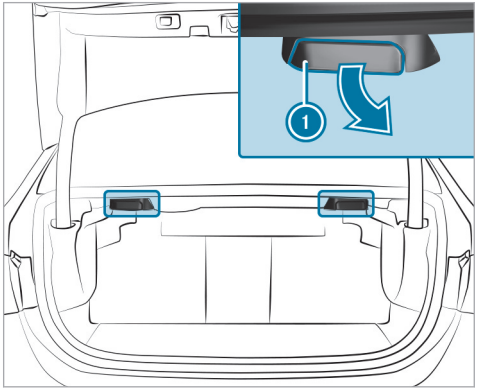

Vehicles with a memory function: if necessary, when the seat backrest in the rear is folded forward, the front seat will move forwards slightly to avoid a collision.

▶ If necessary, fully insert the head restraints in the rear seat backrest.

The release handles are located beneath the rear shelf.

▶ **To fold the left and right seat backrests forward:** pull right or left release handle ① and fold the corresponding seat backrest forwards.

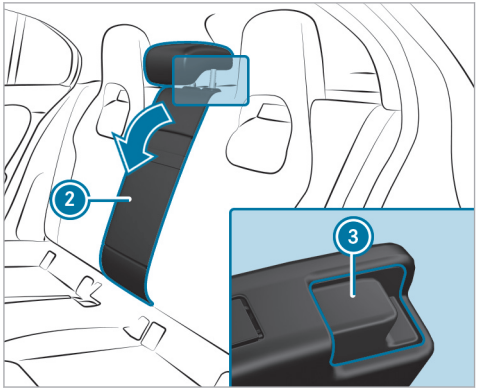

▶ **To fold the centre seat backrest forwards:** pull release catch ③ of seat backrest ② forwards.

▶ Fold seat backrest ② forwards.

▶ If necessary, reset the driver's or front passenger seat.

Folding back the rear seat backrest

⚠ **WARNING** Risk of becoming trapped when adjusting the seats

When you adjust a seat, you may trap yourself or a vehicle occupant.

▶ When adjusting a seat, make sure that no one has any body parts in the sweep of the seat.

⚠ **WARNING** Risk of accident if the rear bench seat, rear seat and seat backrest are not engaged

The rear bench seat, rear seat and seat backrest may fold forwards, even while the vehicle is in motion.

- As a result, the vehicle occupant will be pressed into the seat belt with increased force. The seat belt will not be able to protect as intended and could cause additional injury.

- Objects or loads in the boot or load compartment cannot be restrained by the seat backrest.

▶ Make sure that the rear bench seat, the rear seat and the seat backrest are engaged before every trip.

If the seat backrests are not engaged and locked in place, the red lock verification indicator will be visible.

! NOTE Damage caused by trapping the seat belt when folding back the seat backrest

The seat belt could become trapped and thus be damaged when the seat backrest is folded back.

▶ Make sure that the seat belt is not trapped when folding back the seat backrest.

▶ Move the driver's or front passenger seat forwards, if necessary.

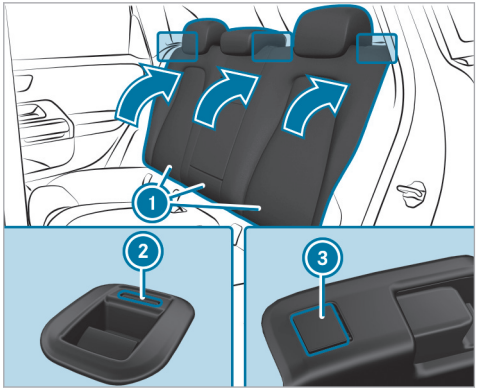

▶ Fold corresponding seat backrest ① back until it engages.
Left and right seat backrests: if the seat backrest is not engaged and locked in place, red lock verification indicator ② will be visible.

Centre seat backrest: if the seat backrest is not engaged and locked in place, red lock verification indicator ③ will be visible.

Locking the release catch of the centre rear seat backrest

⚠ WARNING Risk of accident if the rear bench seat, rear seat and seat backrest are not engaged

The rear bench seat, rear seat and seat backrest may fold forwards, even while the vehicle is in motion.

- As a result, the vehicle occupant will be pressed into the seat belt with increased force. The seat belt will not be able to protect as intended and could cause additional injury.
- Objects or loads in the boot or load compartment cannot be restrained by the seat backrest.

▶ Make sure that the rear bench seat, the rear seat and the seat backrest are engaged before every trip.

If the seat backrests are not engaged and locked in place, the lock verification indicator will be red.

Requirements
- The left and centre seat backrests are engaged and joined together.

You can lock the centre seat backrest release catch if you want to secure the boot against unauthorised access. The centre seat backrest can then be folded forwards only together with the left seat backrest.

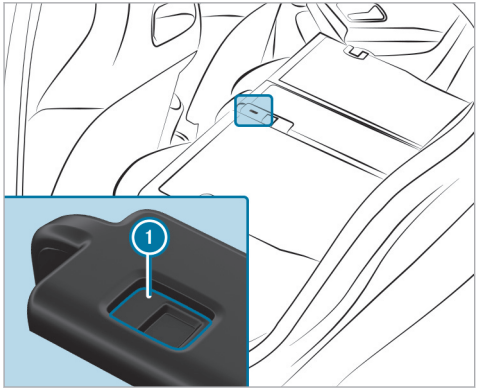

▶ Fold the centre and left seat backrests forwards.

▶ **To lock or unlock:** slide catch (1) upwards or downwards.

Overview of tie-down eyes

Observe the notes on loading the vehicle (→ page 183).

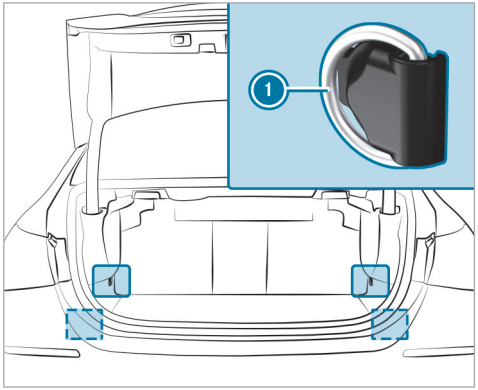

(1) Tie-down eyes (vehicles with through-loading feature in the rear bench seat)

Opening and closing the stowage space under the boot floor

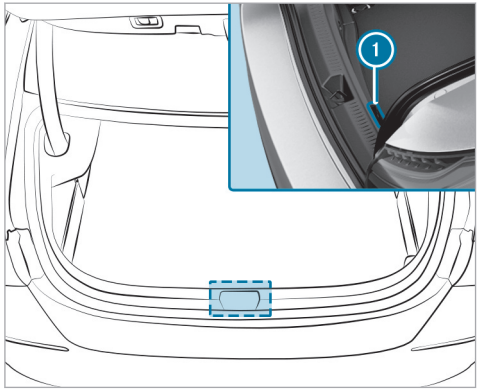

- **To open:** lift the boot floor at recess (1) and swing it upwards.
- **To close:** fold the boot floor downwards.

Attaching a roof luggage rack

WARNING Risk of accident due to exceeding the maximum roof load

The vehicle centre of gravity and the usual driving characteristics as well as the steering and braking characteristics alter.

If you exceed the maximum roof load, the driving characteristics, as well as steering and braking, will be greatly impaired.

- Never exceed the maximum roof load and adjust your driving style.

You will find information on the maximum roof load in the "Technical data" section in the printed Owner's Manual.

NOTE Vehicle damage due to failure to observe the maximum permissible clearance height

If the vehicle height exceeds the maximum permissible clearance height, the roof and other vehicle parts may be damaged.

- Please observe the indicated maximum clearance height.
- If the vehicle exceeds the permissible clearance height, do not drive in.
- Take the modified vehicle height in the case of roof superstructures or other carrier systems into account.

NOTE Vehicle damage from non-approved roof luggage racks

The vehicle could be damaged by roof luggage racks that have not been tested and approved for Mercedes-Benz.

- Use only roof luggage racks tested and approved for Mercedes-Benz.
- Depending on the vehicle equipment, ensure that the sliding sunroof can be fully raised when the roof luggage rack is fitted.
- Depending on the vehicle equipment, ensure that the boot lid can be fully

opened when the roof luggage rack is fitted.

▶ Position the load on the roof luggage rack in such a way that the vehicle will not sustain damage even when it is in motion.

! **NOTE** Damage to the panorama sliding sunroof due to non-approved roof luggage racks

The panorama sliding sunroof may be damaged by the roof luggage rack if you attempt to open it when using a roof luggage rack not tested and approved for Mercedes-Benz.

▶ When a roof luggage rack is fitted, open the panorama sliding sunroof only if this has been tested and approved for Mercedes-Benz.

The panorama sliding sunroof may be raised to allow ventilation of the vehicle interior.

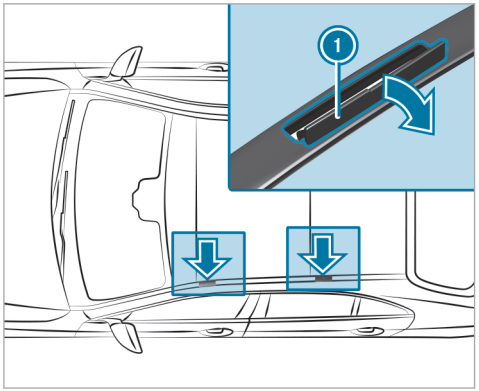

! **NOTE** Damage to the covers

The covers may be damaged and scratched when being opened.

▶ Do not use metallic or hard objects.

▶ Fold covers (1) carefully upwards in the direction of the arrow.

▶ Secure the roof luggage rack to the fastening points beneath covers (1).

▶ Comply with the installation instructions of the roof luggage rack manufacturer.

▶ Secure the load on the roof luggage rack.

Cup holders

Fitting the cup holder in or removing it from the centre console

⚠ **WARNING** - Risk of accident or injury when using the cup holder while the vehicle is in motion

The cup holder cannot hold a container secure while the vehicle is in motion.

If you use a cup holder while the vehicle is in motion, the container may be flung around and liquids could be spilled. The vehicle occupants may come into contact with the liquid and if it is hot, they could be scalded. You could be distracted from traffic conditions and you may lose control of the vehicle.

- Only use the cup holder when the vehicle is stationary.
- Only use the cup holder for containers of the right size.
- Always close the container, particularly if the liquid is hot.

Removing

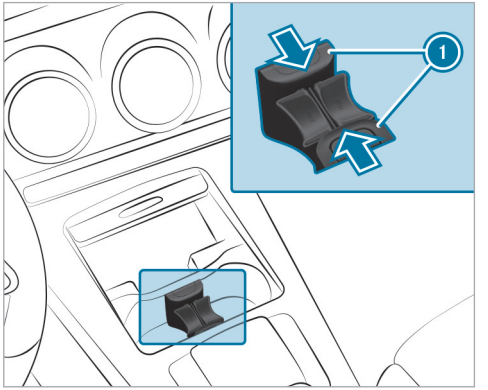

Cup holder in the stowage compartment with cover

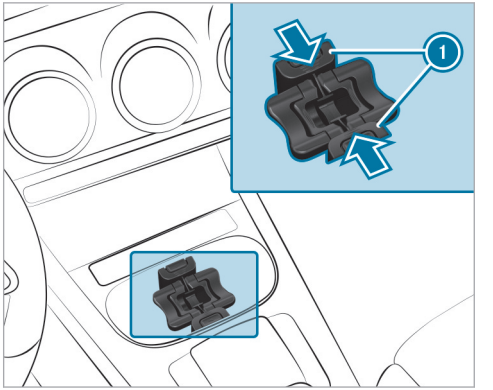

Cup holder in the stowage compartment without cover

- Slide snap-in brackets (1) of the cup holder inwards until they are unlocked.
- Pull the cup holder up and out of the stowage compartment.

ⓘ The cup holder and the rubber mat underneath it can be removed for cleaning, e.g. with clean, lukewarm water.

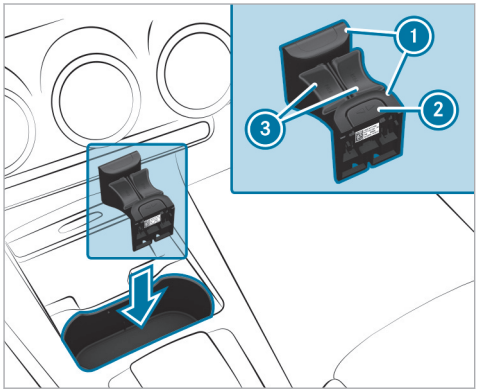

Cup holder in the stowage compartment with cover

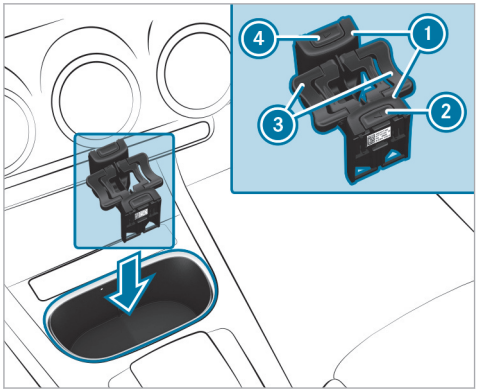

Cup holder in the stowage compartment without cover

Fitting

- ▶ Open the cover of marked space if necessary.
- ▶ Insert the cup holder, as shown, into the stowage compartment with the imprint facing the vehicle interior.
- ▶ Slide the cup holder onto the bars in the stowage compartment.
- ▶ Slide snap-in brackets ① outwards until they engage.
- ▶ Cup holder in the stowage compartment with cover: press button ②.
- ▶ Cup holder in the stowage compartment without cover: press button ② and/or ④. Wings ③ will fold upwards.

ⓘ The cup holder wings can be folded downwards and locked. The cup holder's holding function will then not be available.

Opening or closing the cup holders in the rear armrest

⚠ **WARNING** - Risk of accident or injury when using the cup holder while the vehicle is in motion

The cup holder cannot hold a container secure while the vehicle is in motion.

If you use a cup holder while the vehicle is in motion, the container may be flung around and liquids could be spilled. The vehicle occupants may come into contact with the liquid and if it is hot, they could be scalded. You could be distracted from traffic conditions and you may lose control of the vehicle.

- ▶ Only use the cup holder when the vehicle is stationary.
- ▶ Only use the cup holder for containers of the right size.
- ▶ Always close the container, particularly if the liquid is hot.

! NOTE Damage to the rear armrest due to body weight

When folded out, the rear armrest can be damaged by body weight.

- ▶ Do not sit or support yourself on the rear seat armrest.

! NOTE Damage to the cup holder

The cup holder can be damaged when folding back the rear seat armrest. When open, the cup holder can be damaged by body weight.

- ▶ The rear seat armrest can only be folded back when the cup holder is closed.
- ▶ Do not sit or support yourself on the cup holder when it is open.

ⓘ Depending on its equipment, your vehicle will have a rear armrest with a cup holder.

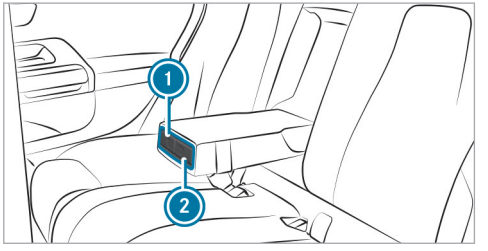

▶ **To open:** press cup holder ① or ②.
Cup holder ① or ② will extend automatically.

▶ **To close:** push cup holder ① or ② back until it engages.

Sockets

Using the 12 V socket

Requirements

- Only devices up to a maximum of 180 W (15 A) are permissible.

Depending on the vehicle equipment, the vehicle has the following 12 V sockets:

- In the stowage compartment in the front centre console
- In the boot

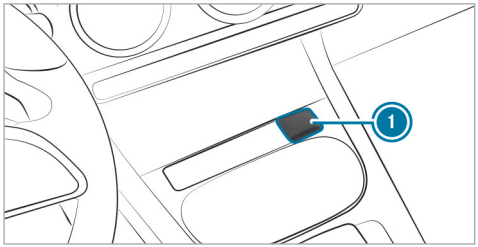

Example: 12 V socket in the stowage compartment in the front centre console

- ▶ Fold up socket cap 1.
- ▶ Insert the plug of the device.

12 V socket in the stowage compartment with cover: if you have connected a device to the 12 V socket, leave the cover of the stowage compartment open.

USB port in the rear passenger compartment

ⓘ Depending on the vehicle equipment, the design of the stowage compartment and the number of USB ports in the rear centre console may vary.

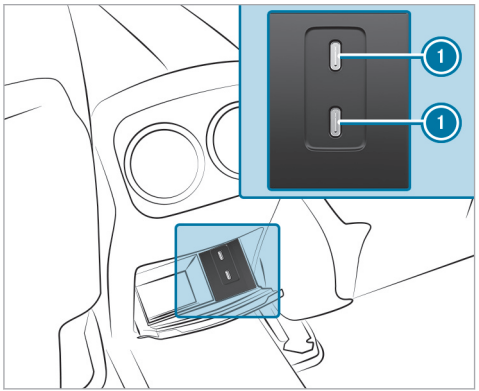

When the vehicle is switched on, you can charge a USB device, such as a mobile phone, at USB port 1 using a suitable charging cable.

Wireless charging of the mobile phone and connection with the exterior aerial

Notes on wirelessly charging a mobile phone

⚠ **WARNING** Risk of injury due to objects being stowed incorrectly

If objects in the vehicle interior are stowed incorrectly, they can slide or be thrown around and hit vehicle occupants. In addition, cup holders, open stowage spaces and mobile phone receptacles cannot always retain all objects within.

There is a risk of injury, particularly in the event of sudden braking or a sudden change in direction.

- ▶ Always stow objects so that they cannot be thrown around in such situations.
- ▶ Always make sure that objects do not protrude from stowage spaces, luggage nets or stowage nets.
- ▶ Close the lockable stowage spaces before starting a journey.

▶ Always stow and secure heavy, hard, pointed, sharp-edged, fragile or bulky objects in the boot/load compartment.

Observe the notes on loading the vehicle.

⚠ **WARNING** Risk of fire from placing objects in the mobile phone stowage compartment

Placing other objects in the mobile phone stowage compartment could constitute a fire hazard.

▶ Apart from a mobile phone, do not place any other objects in the mobile phone stowage compartment, especially those made of metal.

! **NOTE** Damage to objects caused by placing them in the mobile phone stowage compartment

If objects are placed in the mobile phone stowage compartment, these may be damaged by electromagnetic fields.

▶ Do not place credit cards, storage media, ski passes or other objects sensitive to electromagnetic fields in the mobile phone stowage compartment.

! **NOTE** Damage to the mobile phone stowage compartment caused by liquids

If liquids enter the mobile phone stowage compartment, the compartment may be damaged.

▶ Ensure that no liquids enter the mobile phone stowage compartment.

Observe the following notes on wirelessly charging a mobile phone:

- Depending on the vehicle equipment, the mobile phone is connected to the vehicle's exterior aerial via the charging module.
- The charging function and wireless connection of the mobile phone to the vehicle's exterior aerial are only available if the vehicle is switched on.
- Small mobile phones may not be able to be charged in every position of the mobile phone stowage compartment.
- Large mobile phones which do not rest flat in the mobile phone stowage compartment may not be able to be charged or connected with the vehicle's exterior aerial.
- The mobile phone may heat up during the charging process. This may in particular be dependent on the currently open applications (apps), which are open in the background.
- To ensure more efficient charging and connection with the vehicle's exterior aerial, remove the protective cover from the mobile phone. Protective covers which are required for wireless charging are excluded.

Charging a mobile phone wirelessly

⚠ **WARNING** Risk of injury due to objects being stowed incorrectly

If objects in the vehicle interior are stowed incorrectly, they can slide or be thrown around

and hit vehicle occupants. In addition, cup holders, open stowage spaces and mobile phone receptacles cannot always retain all objects within.

There is a risk of injury, particularly in the event of sudden braking or a sudden change in direction.

- ▶ Always stow objects so that they cannot be thrown around in such situations.
- ▶ Always make sure that objects do not protrude from stowage spaces, luggage nets or stowage nets.
- ▶ Close the lockable stowage spaces before starting a journey.
- ▶ Always stow and secure heavy, hard, pointed, sharp-edged, fragile or bulky objects in the boot/load compartment.

Observe the notes on loading the vehicle.

Requirements

- The mobile phone is suitable for wireless charging.

A list of compatible mobile phones can be found at: https://www.mercedes-benz-mobile.com.

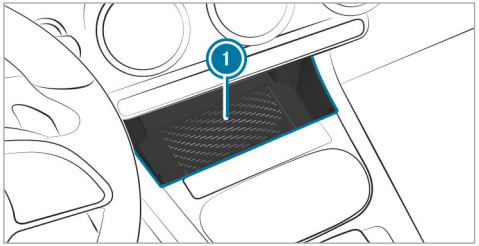

- ▶ Place the mobile phone as close to the centre of the marked surface on mat ① as possible with the display facing upwards.
  When a message is shown in the multimedia system, the mobile phone is being charged.

  Malfunctions during the charging process are shown in the central display.

ⓘ The mat can be removed for cleaning, e.g. using clean, lukewarm water.

Stowage compartment without cover

Make sure the mobile phone is properly stored and secured to prevent it from falling out while you are driving.

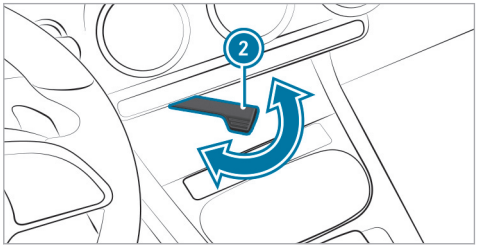

- ▶ **To secure the mobile phone:** swing lever ② out.

Radio equipment approval numbers for Brazil

This device operates on a secondary basis, that is to say it has no protection against harmful interference, not even from the same type of stations, and must not cause interference with systems operating on a primary basis.

This product is permitted in accordance with the procedure defined in Directive 242/2000 by the

Brazilian telecommunications agency ANATEL and meets the applicable technical requirements.

Further information is available on the ANATEL website. www.anatel.gov.br

- For further information on the declaration of conformity for vehicle components which receive and/or transmit radio waves see (→ page 84).

Fitting/removing the floor mats

WARNING Risk of accident due to objects in the driver's footwell

Objects in the driver's footwell may impede pedal travel or block a depressed pedal.

This jeopardises the operating and road safety of the vehicle.

- Stow all objects in the vehicle securely so that they cannot get into the driver's footwell.
- Always fit the floor mats securely and as prescribed in order to ensure that there is always sufficient room for the pedals.
- Do not use loose floor mats and do not place floor mats on top of one another.

Fitting floor mats

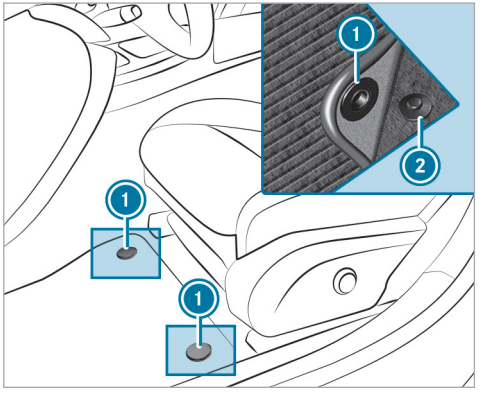

- Slide the corresponding seat backwards and lay the floor mat in the footwell.
- Press studs ① onto holders ②.
- Adjust the corresponding seat.

Removing floor mats

- Pull the floor mat off holders ②.
- Remove the floor mat.

Exterior lighting

Notes on adjusting the lights when driving abroad

It is not necessary to adjust the headlamps. The legal requirements are also met in countries in which traffic drives on the other side of the road.

Information about lighting systems and your responsibility

The various lighting systems of the vehicle are only aids. The driver of the vehicle is responsible for correct vehicle illumination in accordance with the prevailing light and visibility conditions, legal requirements and traffic situation.

Light switch

Operating the light switch

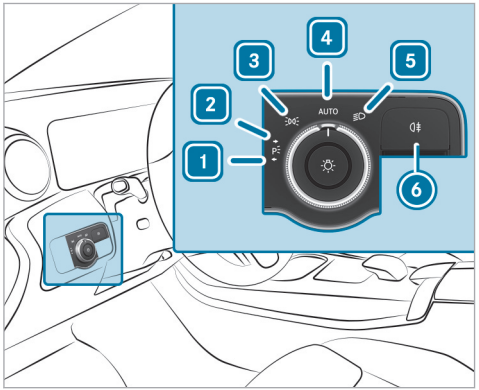

1 ⇤P≡ Left-hand parking lights
2 P≡⇥ Right-hand parking lights
3 ≡DOC Standing lights and licence plate lighting
4 AUTO Automatic driving lights (preferred light switch position)
5 ≡D Low beam/high beam
6 0⇞ Switches the rear fog light on/off.

When low beam is activated, the ≡DOC indicator lamp for the standing lights will be deactivated and replaced by the ≡D low-beam indicator lamp.

▶ Always park your vehicle safely using sufficient lighting, in accordance with the relevant legal stipulations.

! NOTE Battery discharging by operating the standing lights

Do not have the standing lights switched on over a period of several hours.

For vehicles that are wider than 2 m or longer than 6 m, single-sided parking lighting is not permitted in some countries. In this case, the standing lights are also switched on in the parking lights position.

If the battery is insufficiently charged, the standing lights or parking lights will be switched off automatically to facilitate the next engine start.

The exterior lighting (except standing and parking lights) will switch off automatically when the driver's door is opened.

- Observe the notes on locator lighting (→ page 207).

Automatic driving lights function

When the vehicle is switched on, the standing lights, low beam and daytime running lights will be switched on automatically depending on the light conditions.

WARNING Risk of accident when the dipped beam is switched off in poor visibility

When the light switch is set to AUTO, the dipped beam may not be switched on automatically if there is fog, snow or other causes of poor visibility such as spray.

▶ In such cases, turn the light switch to ≡D.

The automatic driving lights are only an aid. You are responsible for the vehicle lighting.

Switching the rear fog light on/off

Requirements

- The light switch is in the ≡D or AUTO position.

▶ Press button 0≡.

Please observe the country-specific laws on the use of rear fog lamps.

Regulating headlamp range (halogen headlamps)

The headlamp range adjuster allows you to adjust the cone of light from the headlamps in relation to the vehicle's load condition.

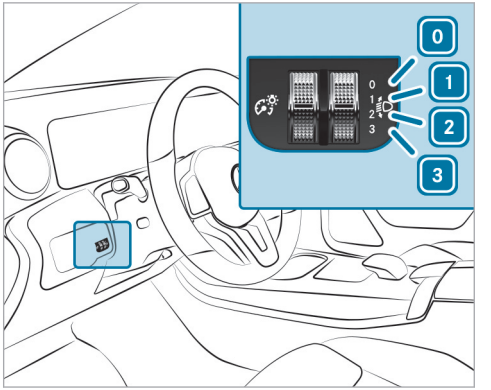

0 Driver's seat and front passenger seat occupied

1 Driver's seat, front passenger seat and rear seats occupied

2 Driver's seat, front passenger seat and rear seats occupied, boot laden

3 Driver's seat and front passenger seat occupied and maximum permissible rear axle load utilised

- Turn the headlamp range adjuster to the position that corresponds to the load condition of your vehicle.

Operating the combination switch for the lights

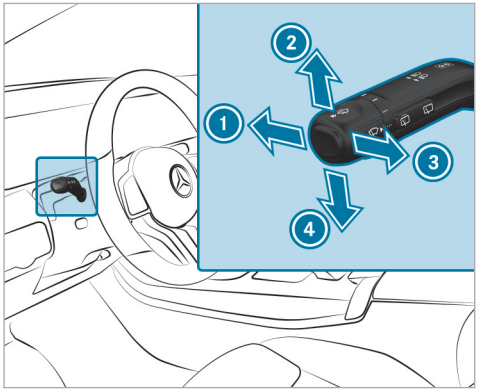

1. High beam
2. Turn signal light, right
3. Headlamp flashing
4. Turn signal light, left

- Use the combination switch to select the desired function.

Switching on high beam

- Turn the light switch to the [≡D] or [AUTO] position.
- Push the combination switch in the direction of arrow 1.
  When high beam is activated, the indicator lamp for low beam [≡D] will be deactivated and replaced by the indicator lamp for high beam [≡D].

Switching off high beam

- Push the combination switch in the direction of arrow 1 or pull it in the direction of arrow 3.

Headlamp flashing

- Pull the combination switch in the direction of arrow 3.

Turn signal light

- **To indicate briefly:** push the combination switch briefly to the point of resistance in the direction of arrow 2 or 4.
  The corresponding turn signal light will flash three times.
- **To indicate permanently:** push the combination switch beyond the point of resistance in the direction of arrow 2 or 4.

Activating/deactivating the hazard warning lights

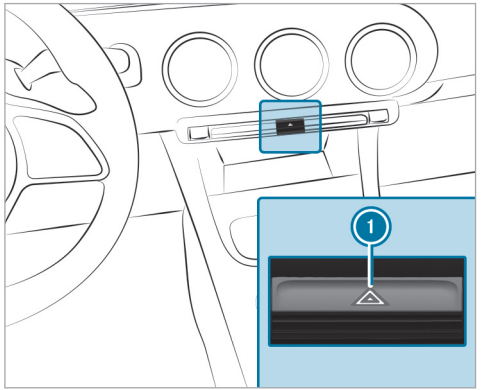

▶ Press button 1.

The hazard warning lights will switch on automatically if:

- the airbag has been deployed.
- the vehicle is braked heavily from a speed of more than 70 km/h to a standstill.

When you pull away again, the hazard warning light system will switch off automatically at approximately 10 km/h. You can also switch off the hazard warning light system using button 1.

Adaptive functions, MULTIBEAM LED

Function of dynamic low beam

You can watch an animation on this topic via the following link:

The MULTIBEAM LED headlamps adapt to the driving and weather situation and provide extended functions for improved illumination of the road.

The system comprises the following functions:

- Active headlamps (→ page 202)
- Cornering light (→ page 203)
- Motorway mode (→ page 203)
- City lighting (→ page 203)

System limits

- The system will be active only when it is dark.

Active headlamps function

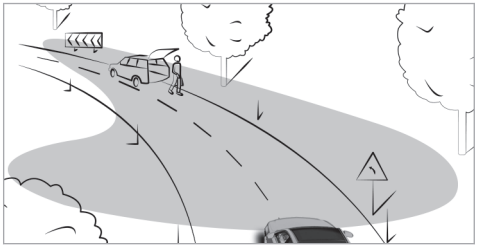

- The headlamps will follow your steering movements.
- Relevant areas will be better illuminated during a journey.

The functions will be active when high beam is switched on.

Cornering light function

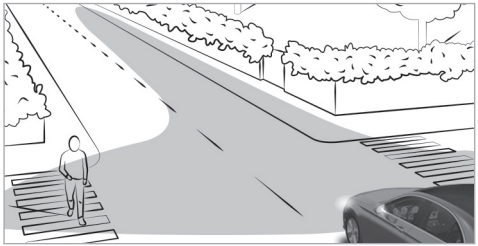

The cornering light improves the illumination of the carriageway over a wide angle in the turning direction, enabling better visibility on tight bends, for example. The cornering light will be activated only when low beam is switched on.

The function will be active in the following cases:

- At speeds below 40 km/h when the turn signal light is switched on or the steering wheel is turned
- At speeds between 40 km/h and 70 km/h and when the steering wheel is turned

Roundabout and junction function: the cornering light will be activated on both sides based on an evaluation of the vehicle's current navigation position. It will remain active until after the vehicle has left the roundabout or junction.

Motorway mode function

Motorway mode increases the range and brightness of the cone of light, enabling better visibility.

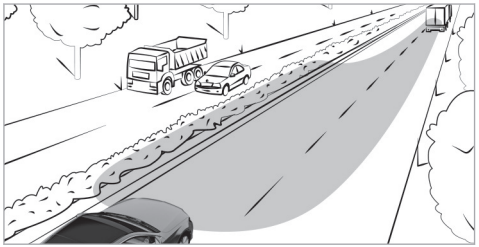

The function will be active if a motorway journey is detected by means of:

- the vehicle's speed
- the multifunction camera
- the GPS

The function will not be active in the following cases:

- at speeds below 80 km/h

The city lighting function

City lighting improves the illumination of roadsides in urban areas using a broad distribution of light.

The function will be active in the following cases:

- At low speeds
- In illuminated parts of urban areas

Activating or deactivating dynamic low beam

Requirements

- The vehicle is switched on.

Multimedia system:

→ [⌂] ▸▸ Settings ▸▸ Lights ▸▸ MULTIBEAM LED

▶ Activate or deactivate Dynamic low beam.

Adaptive Highbeam Assist

Adaptive Highbeam Assist function

WARNING Risk of accident despite Adaptive Highbeam Assist

Adaptive Highbeam Assist does not react to:

- road users without lights, e.g. pedestrians
- road users with poor lighting, e.g. cyclists
- road users whose lighting is obstructed, e.g. by a barrier

On very rare occasions, Adaptive Highbeam Assist may fail to recognise other road users with their own lighting, or may recognise them too late.

In these, or in similar situations, the automatic high beam will not be deactivated or will be activated despite the presence of other road users.

▶ Always observe the road and traffic conditions carefully and switch off the high beam in good time.

Adaptive Highbeam Assist cannot take into account road, weather or traffic conditions.

Detection may be restricted in the following cases:

- in poor visibility, e.g. fog, heavy rain or snow
- if there is dirt on the sensors or the sensors are obscured

Adaptive Highbeam Assist is only an aid. You are responsible for adjusting the vehicle's lighting to the prevailing light, visibility and traffic conditions.

ⓘ Adaptive Highbeam Assist is an on-demand feature (→ page 79).

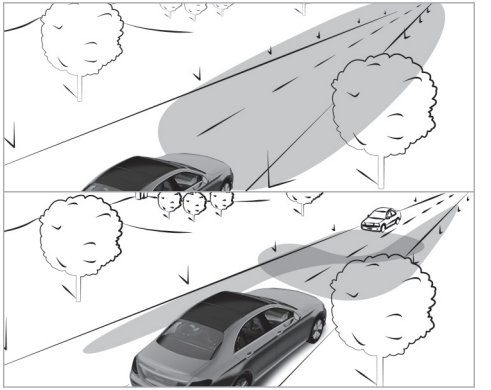

Adaptive Highbeam Assist automatically switches between the following types of light:

- Low beam
- High beam

At speeds greater than 30 km/h:

- If no other road users are detected, high beam will switch on automatically.

High beam will switch off automatically in the following cases:

- At speeds below 25 km/h
- If other road users are detected
- If street lighting is sufficient

ⓘ The system's optical sensor is located behind the windscreen near the overhead control panel.

Switching Adaptive Highbeam Assist on/off

⚠ **WARNING** Risk of accident despite Adaptive Highbeam Assist

Adaptive Highbeam Assist does not react to:

- road users without lights, e.g. pedestrians
- road users with poor lighting, e.g. cyclists
- road users whose lighting is obstructed, e.g. by a barrier

On very rare occasions, Adaptive Highbeam Assist may fail to recognise other road users with their own lighting, or may recognise them too late.

In these, or in similar situations, the automatic high beam will not be deactivated or will be activated despite the presence of other road users.

▶ Always observe the road and traffic conditions carefully and switch off the high beam in good time.

Switching on

▶ Turn the light switch to the AUTO position.

▶ Switch on high beam using the combination switch.
If Adaptive Highbeam Assist is activated, the indicator lamp will light up on the driver's display.

Switching off

▶ Switch off high beam using the combination switch.

Adaptive Highbeam Assist Plus

Adaptive Highbeam Assist Plus function

⚠ **WARNING** Risk of accident despite Adaptive Highbeam Assist Plus

Adaptive Highbeam Assist Plus does not react to:

- road users without lights, e.g. pedestrians
- road users with poor lighting, e.g. cyclists
- road users whose lighting is obstructed, e.g. by a barrier

On very rare occasions, Adaptive Highbeam Assist Plus may fail to recognise other road users with their own lighting, or may recognise them too late.

In these, or in similar situations, the automatic high beam will not be deactivated or will be activated despite the presence of other road users.

▶ Always observe the road and traffic conditions carefully and switch off the high beam in good time.

Adaptive Highbeam Assist Plus cannot take into account road, weather or traffic conditions.

Detection may be restricted in the following cases:

- in poor visibility, e.g. fog, heavy rain or snow
- if there is dirt on the sensors or the sensors are obscured

Adaptive Highbeam Assist Plus is only an aid. You are responsible for adjusting the vehicle's lighting to the prevailing light, visibility and traffic conditions.

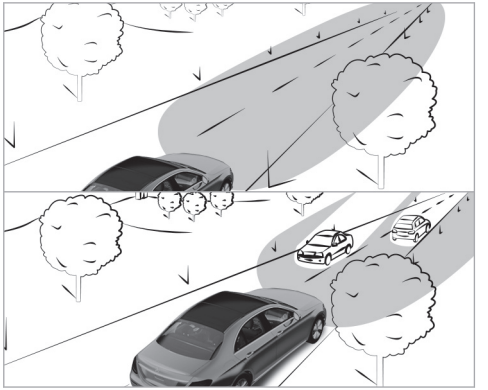

Adaptive Highbeam Assist Plus automatically switches between the following types of light:

- Low beam
- Partial high beam
- High beam

Partial high beam uses high beam to shine past other road users rather than dazzling them. The vehicle in front will be illuminated by the low beam.

At speeds greater than 30 km/h:

- If no other road users are detected, high beam will switch on automatically.
- If other road users are detected, partial high beam will switch on automatically.

At speeds below 25 km/h or when there is sufficient street lighting:

- High beam will switch off automatically.
- Partial high beam will switch off automatically.

ⓘ The system's optical sensor is located behind the windscreen near the overhead control panel.

Switching Adaptive Highbeam Assist Plus on/off

WARNING Risk of accident despite Adaptive Highbeam Assist Plus

Adaptive Highbeam Assist Plus does not react to:

- road users without lights, e.g. pedestrians
- road users with poor lighting, e.g. cyclists
- road users whose lighting is obstructed, e.g. by a barrier

On very rare occasions, Adaptive Highbeam Assist Plus may fail to recognise other road users with their own lighting, or may recognise them too late.

In these, or in similar situations, the automatic high beam will not be deactivated or will be activated despite the presence of other road users.

▶ Always observe the road and traffic conditions carefully and switch off the high beam in good time.

Switching on

▶ Turn the light switch to the AUTO position.

▶ Switch on high beam using the combination switch.
When the high beam is switched on automatically in the dark, the indicator lamp will light up on the driver's display.

Switching off

▶ Switch off high beam using the combination switch.

Setting the exterior lighting switch-off delay time

Multimedia system:

→ ⌂ ▸▸ Settings ▸▸ Lights ▸▸ Interior/exterior lighting ▸▸ Exterior lighting delayed switch off

▶ Set a switch-off delay time.
When the vehicle's engine is switched off, the exterior lighting will be activated for the set time.

Activating/deactivating locator lighting

Multimedia system:

→ ⌂ ▸▸ Settings ▸▸ Lights ▸▸ Interior/exterior lighting

▶ Activate or deactivate Locator lighting.

When the function is activated, the exterior lighting will light up for 40 seconds after the vehicle is unlocked or the driver's door is opened when the vehicle is parked and not locked. When you start the vehicle, the locator lighting is switched off and automatic driving lights are activated.

Interior lighting

Adjusting the interior lighting

Front overhead control panel

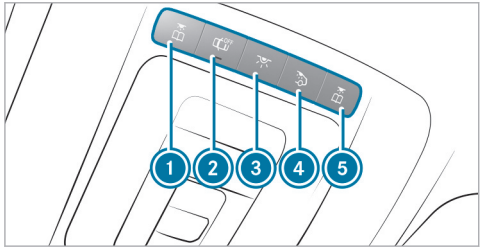

1. Front left reading lamp
2. Automatic interior lighting control
3. Front interior lighting
4. Rear interior lighting
5. Front right reading lamp

▶ **To switch on or off:** press button 1 – 5 accordingly.

Operating unit inside the grab handle (rear)

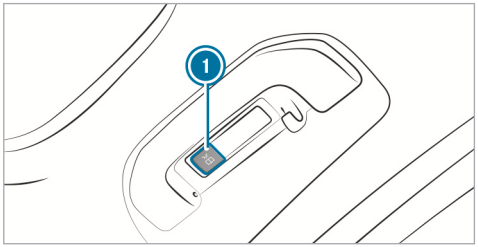

1. Rear reading lamp

▶ **To switch on or off:** press the 1 button.

Adjusting the ambient lighting

Multimedia system:

→ ⌂ ▸▸ Comfort ▸▸ Ambient light

Setting the colour

▶ Select Colour.

▶ Select Monochrome or Multi-colour.

▶ Set the desired colour or colour scheme.

Adjusting the brightness

▶ Select Brightness.

▶ Adjust the brightness.

ⓘ Depending on the ambient light conditions, the ambient lighting will automatically switch between day and night modes.

Activating the brightness for zones

▶ Select Brightness.

▶ Switch off Link zones.
The Direct, Indirect and Accents zones can be set separately.

Activating effects

⚠ **WARNING** Risk of accident if ambient lighting and active ambient lighting effects are not switched on

The warning support effects are fully active only if the respective driving or driving safety systems are switched on on the driving assistance menu.

▶ Ensure that the respective driving or driving safety systems are switched on.

ⓘ Observe the notes on driving systems and your responsibility; you may otherwise fail to recognise dangers (→ page 302).

▶ Select Effects.

▶ Activate the desired effect.

ⓘ Different effects will be available depending on the vehicle equipment.

Operating feedback effects

- Climate: If changes are made to the temperature setting in the vehicle, the colour of the ambient lighting will change briefly.
- Greeting: When you get into the vehicle, a special colour animation will play.

Multi-colour animation

- The chosen colour combination will change at predefined intervals.

Switching the interior lighting switch-off delay time on/off

Multimedia system:

→ [⌂] ▸▸ Settings ▸▸ Lights ▸▸ Interior/exterior lighting ▸▸ Interior lighting delayed switch off

▶ Activate or deactivate Interior lighting delayed switch off.
If this function is active, the interior lighting will be switched on for a short time after the end of the journey.

Changing bulbs (only for vehicles with halogen headlamps)

Notes on changing bulbs

⚠ **WARNING** Risk of burns from hot component parts whilst replacing a bulb

Bulbs, lamps and plugs can become very hot during operation.

When replacing a bulb, you could burn yourself on these component parts.

▶ Allow the component parts to cool down before replacing the bulb.

- Do not use an illuminant if it has been dropped or if its glass has been scratched. The illuminant may otherwise explode.
- Do not touch the glass bulb with your bare hands.
- Protect illuminants from moisture and do not allow them to come into contact with liquids.

Overview of the bulbs to be changed

Halogen headlamps

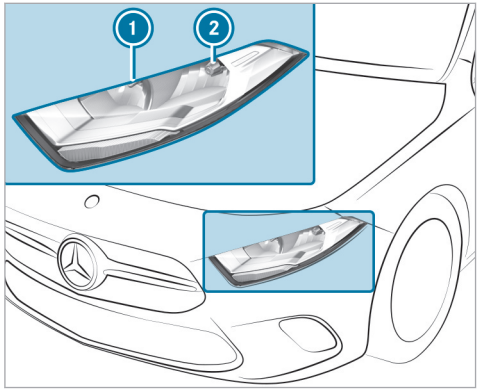

1. High beam: H7 55 W bulb
2. Low beam: H7 55 W bulb

Changing the front bulbs (vehicles with halogen headlamps)

Fitting/removing the cover in the front wheel arch

Requirements:
- The lighting system is switched off.
- The appropriate front wheel is turned inwards.

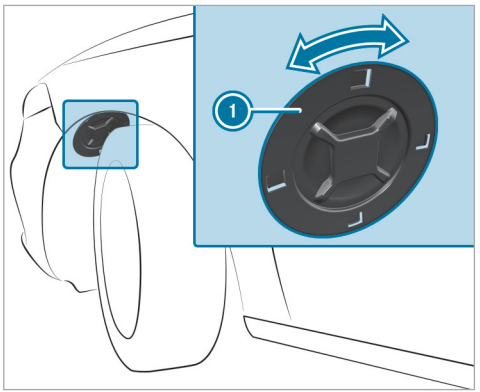

F177 0066 02

- ▶ **To remove:** turn cover 1 to the left and remove it from the wheel arch liner.
- ▶ **To fit:** insert cover 1 into the wheel arch liner and turn it to the right until it engages.

Replacing illuminants in the halogen headlamp

⚠ **WARNING** Risk of burns from hot component parts whilst replacing a bulb

Bulbs, lamps and plug connectors can become very hot during operation.

When replacing a bulb, you could burn yourself on these component parts.

- ▶ Allow the component parts to cool down before replacing the bulbs.

Requirements
- **Low beam:** an H7 55 W illuminant is available.
- **High beam:** an H7 55 W illuminant is available.

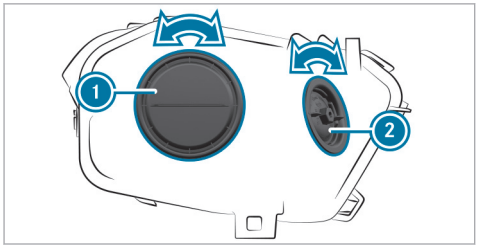

1 Low beam housing cover
2 High beam housing cover

- Switch the lighting system off.
- Remove the cover in the front wheel arch (→ page 210).
- Turn the relevant housing cover anti-clockwise and remove it.
- Turn the socket anti-clockwise and remove it.
- Pull the illuminant out of the socket.
- Insert the new illuminant into the socket such that the base of the bulb rests fully against the base of the socket.
- Insert the socket and turn it clockwise.
- Position the housing cover and turn it clockwise.
- Replace the cover in the front wheel arch (→ page 210).

Windscreen wipers and windscreen washer system

Switching the windscreen wipers on/off

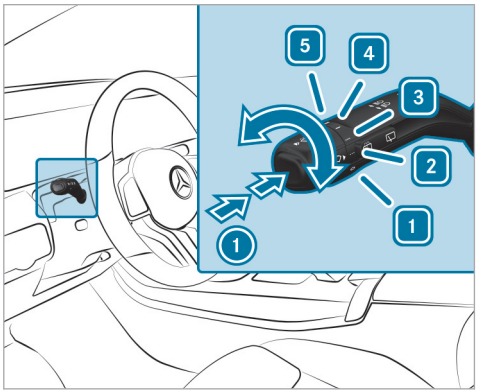

1 0 Windscreen wipers off
2 ••• Automatic wiping, normal
3 •••• Automatic wiping, frequent

4 — Continuous wiping, slow
5 — Continuous wiping, fast

- Turn the combination switch to the corresponding position 1 - 5.
- **Single wipe:** press button 1 as far as the point of resistance.
- **Wiping with washer fluid:** press button 1 beyond the point of resistance.

ⓘ Observe the notes on washing the vehicle in a car wash (→ page 30).

Replacing the windscreen wiper blades

⚠ **WARNING** Risk of becoming trapped if the windscreen wipers are switched on while wiper blades are being replaced

If the windscreen wipers begin to move while you are changing the wiper blades, you can be trapped by the wiper arm.

- Always switch off the windscreen wipers and vehicle before changing the wiper blades.

Moving the wiper arms into the replacement position

- Switch the vehicle on and then off again immediately.
- Within around 15 seconds, press and hold the button on the combination switch for approximately three seconds (→ page 211). The wiper arms will move into the replacement position.

ⓘ Check the condition of the wiper blades regularly and replace them in the event of visible damage or ongoing smearing.

- Observe the information about the service indicator.

Service indicator

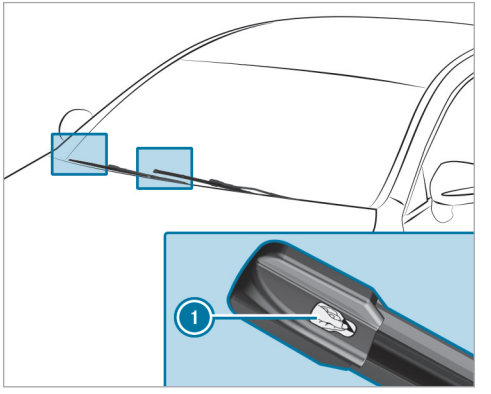

- Remove protective film 1 from the service indicators on the tips of the newly fitted wiper blades.

When the colour of the service indicators changes from black to yellow, replace the wiper blades.

ⓘ The time until the colour changes varies depending on the usage conditions.

Mirrors

Operating the outside mirrors

⚠ **WARNING** Risk of accident due to adjusting the vehicle settings while the vehicle is in motion

You could lose control of the vehicle in the following situations in particular:

- if you adjust the driver's seat, the head restraint, the steering wheel or the mirror while the vehicle is in motion
- if you fasten your seat belt while the vehicle is in motion

▶ Before starting the vehicle: in particular, adjust the driver's seat, head restraint, steering wheel and mirror, and fasten your seat belt.

⚠ **WARNING** Risk of accident due to misjudgement of distance when using the outside mirror

The outside mirrors reflect objects on a smaller scale. The objects in view are in fact closer than they appear.

▶ Therefore, always look over your shoulder in order to ensure that you are aware of the actual distance between you and the road users driving behind you.

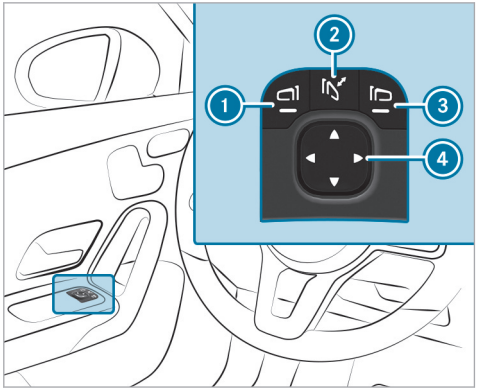

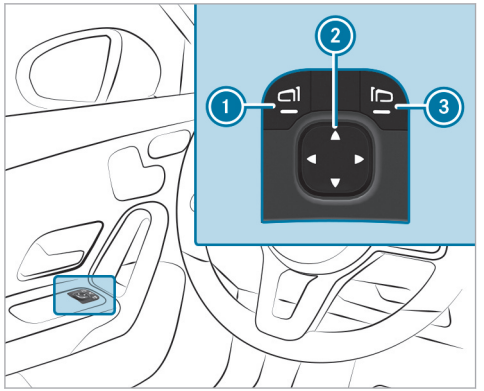

▶ **To fold in or out:** briefly press button ②.

Adjusting

▶ Use button ① or ③ to select the outside mirror to be adjusted.

▶ Use button ④ to adjust the position of the mirror glass.

▶ Use button ② to adjust the position of the mirror glass.

ⓘ If the battery has been disconnected or completely discharged, you will have to reset the outside mirrors. Only then will the automatic mirror folding function work properly.

▶ **To reset:** briefly press button ②.

An outside mirror that has been pushed out of position can be engaged in position again as follows:

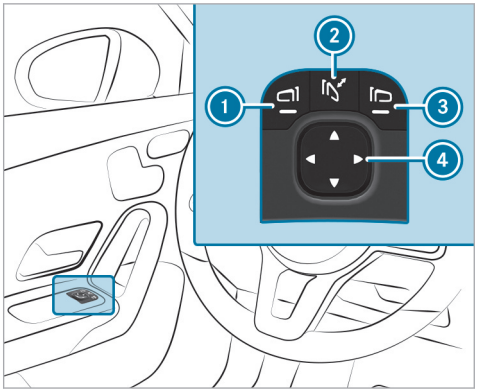

▶ Manually move the outside mirror into the correct position.

▶ Press and hold button ②.
You will hear a click and the mirror will audibly click into place. The outside mirror will now be set to the correct position.

Automatic anti-dazzle mirrors function

⚠ **WARNING** Risk of acid burns and poisoning due to the anti-dazzle mirror electrolyte

Electrolyte may escape if the glass in an automatic anti-dazzle mirror breaks.

The electrolyte is hazardous to health and causes irritation. It must not come into contact with your skin, eyes, respiratory organs or clothing or be swallowed.

▶ If you come into contact with electrolyte, observe the following:
- Immediately rinse the electrolyte from your skin with water and seek medical attention.
- If electrolyte comes into contact with your eyes, immediately rinse them thoroughly with clean water and seek medical attention.
- If the electrolyte is swallowed, immediately rinse your mouth out thoroughly. Do not induce vomiting. Seek medical attention immediately.
- Immediately change out of clothing which has been contaminated with electrolyte.
- If an allergic reaction occurs, seek medical attention immediately.

When light from a headlamp hits the sensor on the inside rearview mirror, the inside rearview mirror automatically dims.

System limits

The system will not go into anti-dazzle mode if:
- The vehicle is switched off.
- Reverse gear is engaged.
- The interior lighting is switched on.

Front-passenger outside mirror parking position function

The parking position makes parking easier.

The front-passenger outside mirror will swivel downwards in the direction of the rear wheel on the front passenger's side when:
- the parking position is stored (→ page 216).
- the front-passenger mirror is selected.
- reverse gear is engaged.

The front-passenger outside mirror will move back to its original position when:
- you shift the transmission to another transmission position.
- you are travelling at a speed greater than 15 km/h.
- you press the button for the outside mirror on the driver's side.

Storing the parking position of the front-passenger outside mirror using reverse gear

Storing

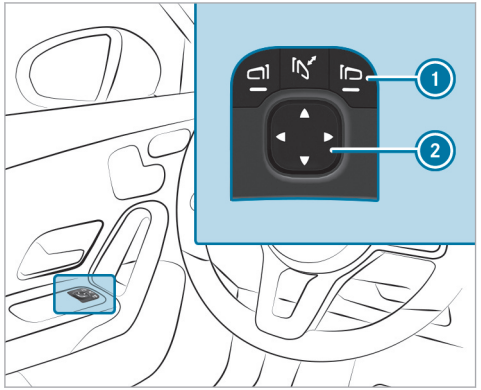

- Press button 1 to select the front-passenger outside mirror.
- Engage reverse gear.
- Move the front-passenger outside mirror into the desired parking position using button 2.

Calling up

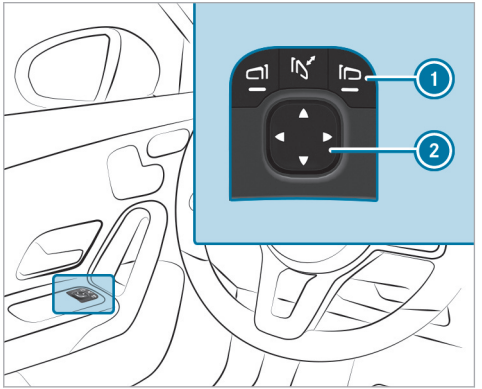

1 Selects the front-passenger outside mirror
2 Adjusts the mirrors

- Press button 1 to select the front-passenger outside mirror.
- Engage reverse gear.
  The front-passenger outside mirror will move into the stored parking position.

Activating/deactivating the automatic mirror folding function

Multimedia system:

→ [⌂] ▸▸ Settings ▸▸ Vehicle ▸▸ Open/close

- Activate or deactivate Automatic mirror fold-in.

Overview of climate control systems

Notes on climate control

For the air-conditioning system, pollution level monitoring and air filtration to function correctly, an interior air filter must always be used. Make sure that the filter is installed correctly. Use filters recommended and approved by Mercedes-Benz. Always have maintenance work carried out at a qualified specialist workshop.

Overview of the air conditioning control panel

The indicator lamps on the buttons indicate that the corresponding functions are activated.

Plug-in hybrid with THERMATIC air conditioning control panel:

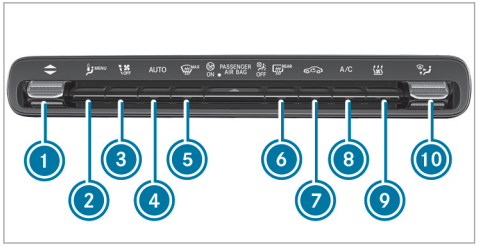

1. Sets the temperature
2. MENU Calls up the air conditioning menu
3. OFF Sets the airflow or switches off climate control
4. AUTO Sets climate control to automatic mode (→ page 220)
5. MAX Defrosts the windscreen
6. REAR Switches the rear window heater on/off
7. Switches air-recirculation mode on/off (→ page 222)
8. A/C Switches the A/C function on/off (→ page 220)
9. Activates/deactivates "Immediate pre-entry climate control" (→ page 225)
10. Sets the air distribution

Vehicles with THERMATIC air conditioning control panel (without stationary heater):

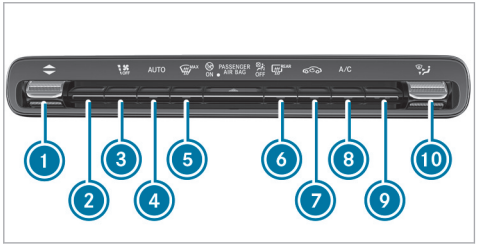

1. Sets the temperature
2. Button inoperative
3. OFF Sets the airflow or switches off climate control
4. AUTO Sets climate control to automatic mode (→ page 220)
5. MAX Demists the windscreen
6. REAR Switches the rear window heater on/off

7 Switches air-recirculation mode on/off (→ page 222)
8 A/C Switches the A/C function on/off (→ page 220)
9 Button inoperative
10 Sets the air distribution

Vehicles with THERMATIC air conditioning control panel (with stationary heater):

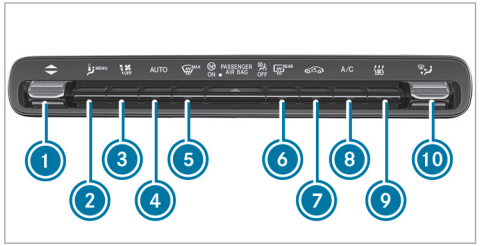

1 Sets the temperature
2 MENU Calls up the air conditioning menu
3 OFF Sets the airflow or switches off climate control
4 AUTO Sets climate control to automatic mode (→ page 220)
5 MAX Demists the windscreen
6 REAR Switches the rear window heater on/off
7 Switches air-recirculation mode on/off (→ page 222)
8 A/C Switches the A/C function on/off (→ page 220)
9 Switches the stationary heater on/off (→ page 46)
10 Sets the air distribution

Plug-in hybrid with THERMOTRONIC air conditioning control panel:

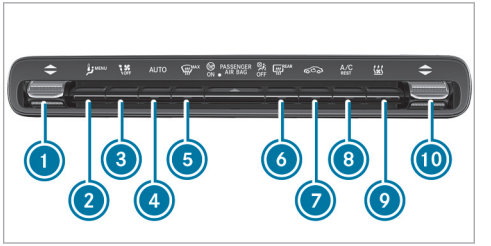

1 Sets the temperature on the driver's side
2 MENU Calls up the air conditioning menu
3 OFF Sets the airflow or switches off climate control
4 AUTO Sets climate control to automatic mode (→ page 220)
5 MAX Demists the windscreen
6 REAR Switches the rear window heater on/off
7 Switches air-recirculation mode on/off (→ page 222)
8 A/C REST Switches the A/C function on/off (→ page 220)

Switches residual heat on/off (→ page 222)

⑨ Activates/deactivates "Immediate pre-entry climate control" (→ page 225)

⑩ Sets the temperature on the front passenger side

Vehicles with THERMOTRONIC air conditioning control panel (without stationary heater):

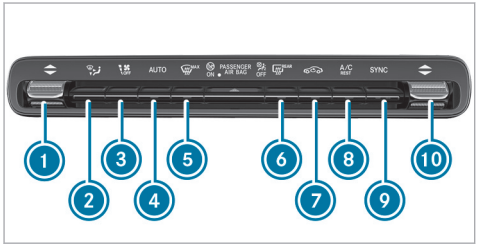

① Sets the temperature on the driver's side

② Sets the air distribution

③ Sets the airflow or switches off climate control

④ AUTO Sets climate control to automatic mode (→ page 220)

⑤ MAX Demists the windscreen

⑥ REAR Switches the rear window heater on/off

⑦ Switches air-recirculation mode on/off (→ page 222)

⑧ A/C REST Switches the A/C function on/off (→ page 220)

Switches residual heat on/off (→ page 222)

⑨ SYNC Switches synchronisation on/off (→ page 221)

⑩ Sets the temperature on the front passenger side

Vehicles with THERMOTRONIC air conditioning control panel (with stationary heater):

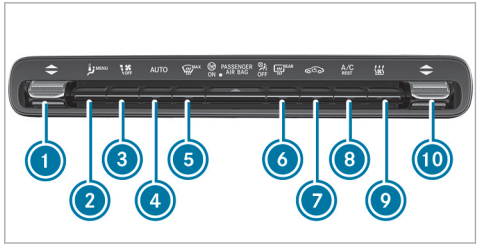

① Sets the temperature on the driver's side

② MENU Calls up the air conditioning menu

③ OFF Sets the airflow or switches off climate control

④ AUTO Sets climate control to automatic mode (→ page 220)

⑤ MAX Demists the windscreen

⑥ REAR Switches the rear window heater on/off

⑦ Switches air-recirculation mode on/off (→ page 222)

⑧ A/C REST Switches the A/C function on/off (→ page 220)

Switches residual heat on/off (→ page 222)

⑨ [ ] Switches the stationary heater on/off (→ page 46)

⑩ [ ] Sets the temperature on the front passenger side

ⓘ Residual heat can be used only in vehicles with a diesel engine or vehicles with a stationary heater in combination with the THERMOTRONIC air conditioning control panel.

Operating the climate control system

Switching climate control on/off

▶ **To switch on:** set the airflow to level 1 or higher using the [ ] button.

▶ **To switch off:** set the airflow to level 0 using the [ ] button.

If climate control is switched off, the windows may mist up more quickly. Switch climate control off only briefly.

Switching the A/C function on/off using the air conditioning control panel

The A/C function heats, cools and dehumidifies the vehicle's interior air.

▶ Press the [A/C] / [A/C REST] button.

Switch off the A/C function only briefly; otherwise, the windows may mist up more quickly.

Condensation may drip from the underside of the vehicle when cooling mode is active. This is not indicative of a fault.

Calling up the air conditioning menu via the climate bar or the air conditioning control panel

The air conditioning menu can be called up via the climate bar. The climate bar is always shown on the lower edge of the media display.

▶ Select the Climate menu entry in the air conditioning bar.

Activating/deactivating the A/C function via the air conditioning menu

Multimedia system:

→ Climate menu ▸▸ First row of seats

Depending on the external conditions, support for improved cooling and dehumidification of the interior air will be provided when the A/C function is activated. If it is not possible to operate the A/C function on the climate bar on the central display, switch the function on or off in the climate menu of the central display.

▶ Select A/C (A/C).

Switch off the A/C function only briefly; otherwise, the windows may mist up more quickly.

Condensation may drip from the underside of the vehicle when cooling mode is active. This is not indicative of a fault.

Setting climate control to automatic mode

In automatic mode, the set temperature is controlled and maintained at a constant level by the air supply.

- Press button AUTO.
- **To switch to manual mode:** press the [icon] or AUTO button.

In automatic mode, you can choose between five different air quantities using the [icon] button. Automatic mode is retained.

Overview of the air distribution settings

The symbols on the display indicate which vents the airflow is being directed through:

- [icon] Demister and side air vents
- [icon] Centre and side air vents
- [icon] Footwell and side air vents
- [icon] Centre, side and footwell vents
- [icon] Demister, footwell and side air vents
- [icon] All vents
- [icon] Demister, centre and side air vents
- [icon] Automatic air distribution

Setting air distribution via the air conditioning menu

Multimedia system:

→ Climate menu

- Select First row of seats or Second row of seats.
- To set air distribution: select [icon], [icon] or [icon].
- Set the airflow.

ⓘ When the air conditioning system is switched on, at least one zone is always active. However, several air distribution options can be selected at the same time, for example to set the climate control for the vehicle interior and the footwells simultaneously. The [icon] climate control for the windscreen can only be selected for the first seat row. When automatic mode is active, the buttons for setting the air distribution are deactivated automatically. If the air conditioning system is deactivated, the buttons remain operable and the last setting is saved.

Switching the synchronisation function on/off via the air conditioning control panel

Requirements

- The vehicle is not equipped with a stationary heater.

Climate control can be set centrally using the synchronisation function. The temperature and air distribution settings for the driver's side will be adopted automatically for the front passenger side.

- Press the SYNC button.

The synchronisation function will switch off if the settings for one of the other climate zones are changed.

Switching the synchronisation function on/off via the air conditioning menu

Multimedia system:

→ Climate menu ▸▸ First row of seats

The synchronisation function controls the climate control centrally. The driver's settings for temper-

ature, airflow and air distribution are automatically adopted for each climate zone.

▶ Select SYNC (SYNC).

Demisting the windows

Windows misted up on the inside

▶ Press the AUTO button.

▶ If the windows remain misted up: press the MAX button.

Windows misted up on the outside

▶ Switch on the windscreen wipers.

▶ Press the AUTO button.

Switching air-recirculation mode on/off

▶ Press the button.
The interior air will be recirculated.

Air-recirculation mode automatically switches to fresh air mode after a while.

ⓘ If air-recirculation mode is switched on, the windows may mist up more quickly. Switch on air-recirculation mode only briefly.

Switches residual heat on/off

Requirements

- The vehicle is parked.

ⓘ Residual heat can be used only in vehicles with a diesel engine or vehicles with a stationary heater in combination with the THERMOTRONIC air conditioning control panel.

It is possible to make use of the residual heat from the engine to continue heating or ventilating the front compartment of the vehicle for approximately 30 minutes, depending on the temperature set.

▶ **To activate:** press the A/C REST button.

Residual heat will be switched off automatically.

Pre-entry climate control via the key (plug-in hybrid)

Function of pre-entry climate control via the key (plug-in hybrid)

Before entering the vehicle, the driver's side or the whole vehicle interior can be briefly pre-warmed or pre-cooled.

When pre-cooling, the following functions are activated as needed:

- Automatic climate control
- Blower

When pre-heating, the following functions are activated as needed:

- Automatic climate control
- Blower
- Seat heating
- Steering wheel heater
- Mirror heater
- Rear window heater

Setting pre-entry climate control when the vehicle is unlocked in the multimedia system

Multimedia system:

→ Climate menu ▸▸ Pre-entry climate ctrl

▶ Activate or deactivate the function.

Selecting seats

▶ Select Driver, Passenger, Rear left or Rear right.
The seat-specific functions of pre-entry climate control (e.g. seat heating) will be performed for the selected seats.

When pre-entry climate control is enabled, an LED on the climate bar of the media display will light up blue for a cooled vehicle and red for a heated vehicle.

Activating/deactivating pre-entry climate control via the key (plug-in hybrid)

Requirements:

- The high-voltage battery is charged sufficiently.
- The function has been activated via the multimedia system.

▶ **To switch on:** unlock the vehicle.
The climate control functions are activated for up to five minutes for pre-heating and pre-cooling.

Pre-entry climate control via the key cannot be activated more than twice when the vehicle is switched off.

▶ **To switch off:** push the [ ] button up or down.

The following functions will remain active once the vehicle has been started:

- Seat heating

Pre-entry climate control for departure time (plug-in hybrid)

Function of pre-entry climate control for departure time (plug-in hybrid)

⚠ **WARNING** Risk of fatal injury due to exposure to extreme heat or cold in the vehicle

If persons, particularly children, are subjected to prolonged exposure to intense heat or cold, there is a risk of severe injury or even death.

▶ Never leave persons, particularly children, unattended in the vehicle.

The vehicle interior can be air conditioned when the vehicle is parked.

When the vehicle is connected to power supply equipment, priority is given to charging the high-voltage battery to a specified minimum charge.

The running time of pre-entry climate control may be reduced under the following conditions:

- The vehicle is not connected to power supply equipment.

- The high-voltage battery is not charged sufficiently.

With active pre-entry climate control, the charge level of the high-voltage battery may be reduced, even if the charging cable connector is connected.

For cooling, the following functions are activated as needed:

- Automatic climate control
- Blower

For heating, the following functions are activated as needed:

- Automatic climate control
- Blower
- Seat heating
- Steering wheel heater
- Mirror heater
- Rear window heater

Setting pre-entry climate control at departure time via the multimedia system

Multimedia system:

→ Climate menu ▸▸ Pre-entry climate ctrl

Setting the departure time

▶ Select Edit departure time [✎].

▶ Select a departure time or set a new departure time.

Setting the repeat days

▶ Select Edit departure time [✎].

▶ Set the desired departure time and select the corresponding days on which this departure time is to apply.

▶ Press OK to confirm.

Selecting seats

▶ Select Driver, Passenger, Rear left or Rear right.
Pre-entry climate control will take place for the selected seats.

Setting pre-entry climate control for departure time (plug-in hybrid)

Multimedia system:

→ Climate menu ▸▸ Pre-entry climate ctrl

Setting a single departure time

▶ Select ONCE.

▶ Set a departure time.

Changing the active departure time

▶ Select the pen icon next to the displayed departure time.

▶ Set a departure time.

Setting the week profile

▶ Select WEEK PROFILE.

▶ Set the desired departure times, e.g. every day at 8:00 a.m.

Selecting the zone

▶ Select [⚙].

▶ Select Driver's seat only.
If the Driver's seat only setting is deactivated, pre-entry climate control will take place for the entire vehicle.

Activating/deactivating pre-entry climate control for departure time (plug-in hybrid)

⚠ **WARNING** Risk of fatal injury due to exposure to extreme heat or cold in the vehicle

If persons, particularly children, are subjected to prolonged exposure to intense heat or cold, there is a risk of severe injury or even death.

▶ Never leave persons, particularly children, unattended in the vehicle.

Requirements:

- The high-voltage battery is charged sufficiently.
- The function has been activated via the multimedia system.

▶ **To activate:** set the departure time (→ page 224).
Pre-entry climate control for departure time will switch on a maximum of 55 minutes before the selected departure time. It will remain active for another five minutes if departure is delayed.

▶ **To deactivate:** press the button up or down.

The following functions will remain active once the vehicle has been started:

- Seat heating

Activating/deactivating immediate pre-entry climate control

⚠ **WARNING** Risk of fatal injury due to exposure to extreme heat or cold in the vehicle

If persons, particularly children, are subjected to prolonged exposure to intense heat or cold, there is a risk of severe injury or even death.

▶ Never leave persons, particularly children, unattended in the vehicle.

Air conditioning of the vehicle interior can continue for up to 50 minutes, e.g. if the journey is interrupted.

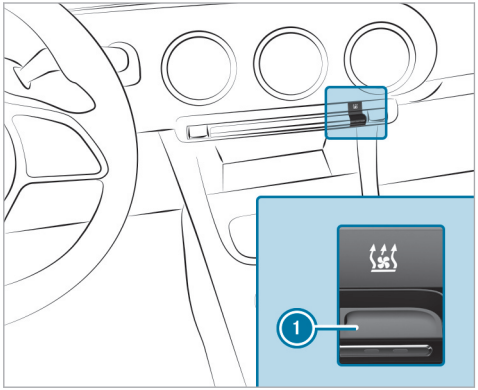

The colours of the indicator lamp have the following meanings:

- **Blue:** cooling is activated.
- **Red:** heating is activated.

- **Yellow:** the departure time has been preselected.

▶ Set the desired temperature using the ▼▲ button.

▶ Press button ① .
The red or blue indicator lamp on button ① will light up or go out.

Stationary heater/ventilation

Stationary heater/ventilation function

ⓘ The following function is equipment-dependent.

- The air inside the vehicle is heated or ventilated to the set temperature.
- The air inside the vehicle cannot be cooled down to temperatures below the outside temperature.
- If the outside temperature changes, ventilation mode will automatically switch to heating mode or heating mode will automatically switch to ventilation mode.

The stationary heater and the exhaust gas outlet are situated in front of the right front wheel.

Switching the stationary heater/ventilation on/off via the operating unit

⚠ **DANGER** Risk of fatal injury due to poisonous exhaust gases

If the tailpipe is blocked or sufficient ventilation is not possible, poisonous exhaust gases such as carbon monoxide may enter the vehicle. This is the case in enclosed spaces or if the vehicle gets stuck in snow, for example.

▶ Always switch the stationary heater off in enclosed spaces without an air extraction system, e.g. in garages.

▶ Keep the tailpipe and the area around the vehicle free from snow when the engine or the stationary heater is running.

▶ Open a window on the side of the vehicle facing away from the wind to ensure an adequate supply of fresh air.

⚠ **WARNING** Risk of fire due to hot stationary heater components and exhaust gases

Flammable materials such as leaves, grass or twigs may ignite.

▶ When the stationary heater is switched on, make sure that:
- hot vehicle parts do not come into contact with flammable materials.
- the exhaust gas can flow out of the stationary heater exhaust pipe unhindered.
- the exhaust gas does not come into contact with flammable materials.

! **NOTE** Battery discharge caused by stationary heater or stationary ventilation operation

Operating the stationary heater or stationary ventilation drains the battery.

▶ After heating or ventilating the vehicle twice, drive for a longer period of time.

Requirements
- The fuel tank is at least ¼ full.

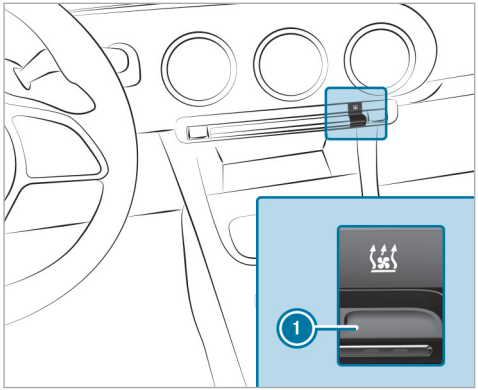

▶ Set the desired temperature using the ▼▲ button.

▶ Press button 1.
The red or blue indicator lamp on button 1 will light up or go out.

The colours of the indicator lamp have the following meanings:
- **Blue:** stationary ventilation is switched on.
- **Red:** the stationary heater is switched on.
- **Yellow:** the departure time is preselected.

The stationary heater/ventilation will switch off automatically after 50 minutes.

Setting the stationary heater/ventilation via the multimedia system

Requirements
- The vehicle is fitted with the stationary heater equipment.

Multimedia system:
→ Climate menu ▸▸ Stationary heater

Selecting the departure time

▶ Select Time A, Time B or Time C.

Setting the departure time

▶ Select Time A, Time B or Time C.

▶ Select the pen beside the time.

▶ Set a time.

Air vents

Adjusting the front air vents

⚠ **WARNING** Risk of burns or frostbite due to being too close to the air vents

Very hot or very cold air can flow from the air vents.

▶ Make sure that all vehicle occupants always maintain a sufficient distance from the air vents.

▶ If necessary, direct the airflow to another area of the vehicle interior.

To guarantee the flow of fresh air through the air vents into the vehicle interior, note the following:
- Always keep the vents and ventilation grilles in the vehicle interior clear.
- Keep the air inlet free of residue build-up (→ page 562).

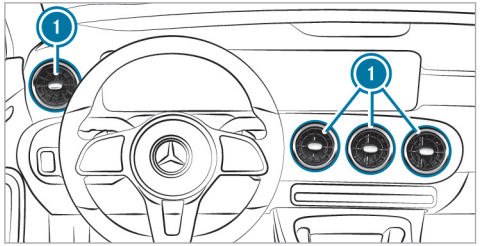

- **To open or close:** hold the centre of air vent (1) and turn it to the left (open) or right (closed) as far as it will go.
- **To set the airflow direction:** hold the centre of air vent (1) and move it up or down or to the left or right.

Adjusting the rear air vents

WARNING Risk of burns or frostbite due to being too close to the air vents

Very hot or very cold air can flow from the air vents.

- Make sure that all vehicle occupants always maintain a sufficient distance from the air vents.
- If necessary, direct the airflow to another area of the vehicle interior.

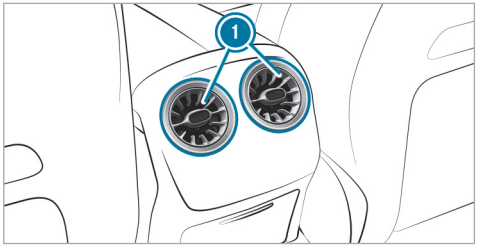

- **To open or close:** hold the centre of air vent (1) and turn it to the left or right as far as it will go.
- **To set the airflow direction:** hold the centre of air vent (1) and move it up or down or to the left or right.

Driving

Notes on plug-in hybrids

Notes on plug-in hybrid operation

WARNING Risk of chemical burns and poisoning from damaged high-voltage battery

If the housing of the high-voltage battery has been damaged, electrolyte and gases may leak out.

- Avoid contact with the skin, eyes or clothing.
- Immediately rinse electrolyte splashes off with water and seek medical attention straight away.

DANGER Risk of fire and explosion from excessive internal pressure of the high-voltage battery

In the event of a vehicle fire, flammable gas can escape and ignite.

- Stop the charging process immediately in case of unusual odours, smoke or burn marks.
- Leave the danger zone immediately. Secure the danger zone at a sufficient distance.
- Call the fire service.

The hybrid system combines a combustion engine with an electric motor.

Characteristics when the vehicle is at a standstill:

- The combustion engine is generally switched off.
- Idle speed occurs only in certain instances.

Characteristics when starting the vehicle:

- If the high-voltage battery is sufficiently charged, the vehicle can be started with the electric drive without the combustion engine (noiseless start).
- If the high-voltage battery for the electric drive is not sufficiently charged or the vehicle conditions for a silent start are not met, the vehicle will start with the combustion engine.

ⓘ Depending on the system, it may be that even though the high-voltage battery is charged, electric mode has restricted or no availability. When the combustion engine has run for long enough and the ambient conditions permit, electric mode will be available without restriction once more.

ⓘ To start the combustion engine, the high-voltage battery can be used as a starter battery.

Characteristics with moderate power output requests:

- The combustion engine is switched off as often as possible during a journey.
- Depending on the drive program selected and the state of charge of the high-voltage battery, the vehicle can be accelerated electrically up to a speed of approximately 140 km/h.

Characteristics with high power output requests:

- The electric motor supports the combustion engine (boost effect), e.g. when pulling away or accelerating.

- The high-voltage battery is discharging.

Characteristics when releasing the accelerator pedal during a journey:

- The electric motor is operated as an alternator when in overrun mode and during braking.
- The high-voltage battery is charging.

Notes on electric mode:

- Vehicles with hybrid systems generate significantly less noise when stationary and when being driven than vehicles with combustion engines.
- In electric mode, the vehicle may not be heard by other road users due to the significantly reduced noise generated.

  It is for this reason that the vehicle is equipped with a sound generator, which serves as an acoustic vehicle alerting system (AVAS). This safety system is prescribed by law.

  The external noise produced by the sound generator is perceptible in the vehicle interior at low speeds and does not constitute a malfunction.
- If not all of the vehicle conditions for electric mode are met, then the combustion engine is switched on.
- Performance restrictions in electric mode are possible as a result of the operating temperature of the high-voltage battery and drive system, the ambient temperature and ageing of the high-voltage battery.
- In electric mode, the maximum power will not be permanently available and may drop to continuous output.

Notes on the acoustic vehicle alerting system:

- The sound generator produces speed-dependent driving noises up to a speed of approximately 30 km/h when driving forwards and reversing.
- This helps other road users, particularly pedestrians and cyclists, to hear your vehicle better.
- From a speed of 20 km/h, the acoustic vehicle alerting system gradually switches off.
- The sound generator is off when the vehicle is stationary.

Manually disconnecting the high-voltage on-board electrical system

DANGER Risk of death and fire due to modified and/or damaged components of the high-voltage on-board electrical system

The vehicle's high-voltage on-board electrical system is under high voltage. If you modify component parts in the vehicle's high-voltage on-board electrical system or touch damaged component parts, you may be electrocuted. In addition, modified and/or damaged components may cause a fire.

In the event of an accident or impact to the underbody, components of the high-voltage on-board electrical system may be damaged although the damage is not visible.

- ▶ Never make any modifications to the high-voltage on-board electrical system.
- ▶ Do not switch on or use the vehicle if its high-voltage on-board electrical system

components have been modified or damaged.

- ▶ Never touch damaged components of the high-voltage on-board electrical system.
- ▶ After an accident, do not touch any components of the high-voltage on-board electrical system.
- ▶ After an accident, have the vehicle transported away.
- ▶ Have the components of the high-voltage on-board electrical system checked at a qualified specialist workshop and replaced if necessary.

Requirements

Only disconnect the high-voltage on-board electrical system manually in the following situations:

- The [ ] restraint system warning lamp lights up in the driver's display, e.g. after an accident.
- The vehicle is badly damaged, e.g. after an accident, and the restraint system components have not been triggered.

Operating the high-voltage disconnect device

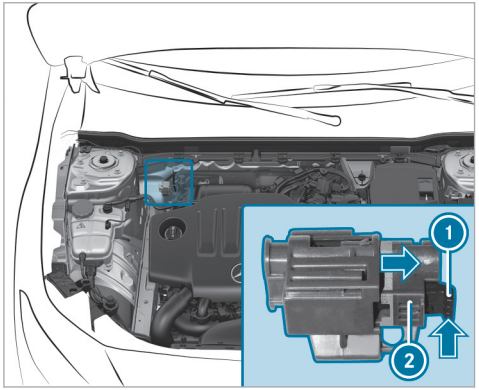

- ▶ Switch off the vehicle.
- ▶ Shift the transmission to position [P].
- ▶ Apply the electric parking brake.
- ▶ Secure the vehicle against rolling away.
- ▶ Open the bonnet.
- ▶ Press release tab (1) in the direction of the arrow and pull it out.
- ▶ Pull high-voltage disconnect device (2) in the direction of the arrow until it engages.
  The high-voltage on-board electrical system is switched off.

All work on the hybrid drive system (including after disconnecting the high-voltage on-board electrical system manually) may only be carried out in a qualified specialist workshop.

Switching on the power supply or the vehicle

⚠ **WARNING** Accident- and risk of injury with unsupervised children in the vehicle

If you leave children unattended in the vehicle, they can in particular

- Open doors and thereby endanger other persons or road users.

- get out of the car and are hit by traffic.
- Operate vehicle equipment and become trapped, forexample.

In addition, the children could also set the vehicle in motion, for exampleby:

- releasing the parking brake.
- change the gearbox setting.
- start the vehicle.

▶ Never leave children unattended in the vehicle.

▶ When leaving the vehicle, always take the SmartKey with you and lock the vehicle.

▶ Keep the key out of reach of children.

Requirements

- The key is in the vehicle and is recognised.
- The brake pedal is not depressed.

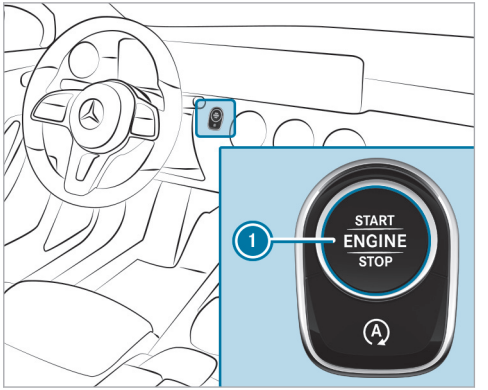

▶ **To switch on the power supply:** press button (1) once.
You can, for example, switch on the windscreen wipers.

The power supply will be switched off again if the following conditions are met:

- You open the driver's door.
- You press button (1) twice more.

▶ **To switch on the vehicle:** press button (1) twice.
Indicator and warning lamps will light up on the driver's display.

The vehicle will be switched off again if one of the following conditions is met:

- You do not start the vehicle within 15 minutes and the transmission is in position P or the electric parking brake is applied.
- You press button (1) once.

Starting the vehicle

Starting the vehicle with the start/stop button

⚠ **DANGER** Risk of fatal injuries due to exhaust gases

Combustion engines emit poisonous exhaust gases such as carbon monoxide. Breathing in these exhaust gases is hazardous to health and results in poisoning.

▶ Never leave the engine and, if present, the stationary heater, running in an

enclosed space without sufficient ventilation.

WARNING Risk of fire due to flammable materials in the engine compartment or on the exhaust system

Flammable materials may ignite.

▶ Therefore, regularly check that there are no flammable foreign materials in the engine compartment or on the exhaust system.

WARNING Accident- and risk of injury with unsupervised children in the vehicle

If you leave children unattended in the vehicle, they can in particular

- Open doors and thereby endanger other persons or road users.
- get out of the car and are hit by traffic.
- Operate vehicle equipment and become trapped, forexample.

In addition, the children could also set the vehicle in motion, for exampleby:

- releasing the parking brake.
- change the gearbox setting.
- start the vehicle.

▶ Never leave children unattended in the vehicle.

▶ When leaving the vehicle, always take the SmartKey with you and lock the vehicle.

▶ Keep the key out of reach of children.

Requirements

- The key is in the vehicle and is recognised.

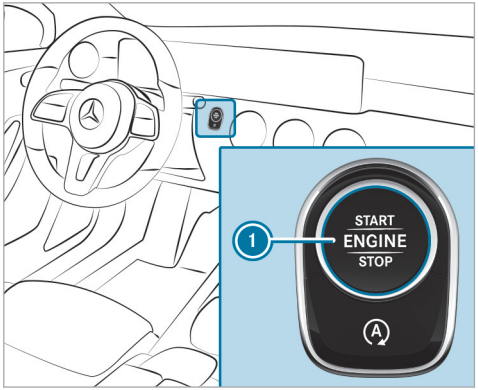

▶ Shift the transmission to position P or N.

▶ Depress the brake pedal and press button 1 once.

▶ Keep the brake pedal depressed until the vehicle starts.

▶ If the vehicle does not start: switch off non-essential consumer equipment and press button 1 once.

▶ If the vehicle still does not start and the Place the key in the marked space See Owner's Manual display message appears on the driver's display: start the vehicle with the key in the marked space (emergency operation mode) (→ page 234).

ⓘ You can switch off the vehicle while driving. To do this, press and hold button ① for about three seconds or press button ① three times within three seconds. Be sure to observe the safety notes concerning this under "Driving tips" (→ page 238).

Observe any information regarding display messages that may be shown on the driver's display.

Starting the vehicle with the key in the marked space (emergency operation mode)

⚠ **DANGER** Risk of fatal injuries due to exhaust gases

Combustion engines emit poisonous exhaust gases such as carbon monoxide. Breathing in these exhaust gases is hazardous to health and results in poisoning.

▶ Never leave the engine and, if present, the stationary heater, running in an enclosed space without sufficient ventilation.

⚠ **WARNING** Risk of fire due to flammable materials in the engine compartment or on the exhaust system

Flammable materials may ignite.

▶ Therefore, regularly check that there are no flammable foreign materials in the engine compartment or on the exhaust system.

⚠ **WARNING** Accident- and risk of injury with unsupervised children in the vehicle

If you leave children unattended in the vehicle, they can in particular

- Open doors and thereby endanger other persons or road users.
- get out of the car and are hit by traffic.
- Operate vehicle equipment and become trapped, forexample.

In addition, the children could also set the vehicle in motion, for exampleby:

- releasing the parking brake.
- change the gearbox setting.
- start the vehicle.

▶ Never leave children unattended in the vehicle.

▶ When leaving the vehicle, always take the SmartKey with you and lock the vehicle.

▶ Keep the key out of reach of children.

If the vehicle does not start and the Place the key in the marked space See Owner's Manual message appears on the driver's display, you can start the vehicle in emergency mode.

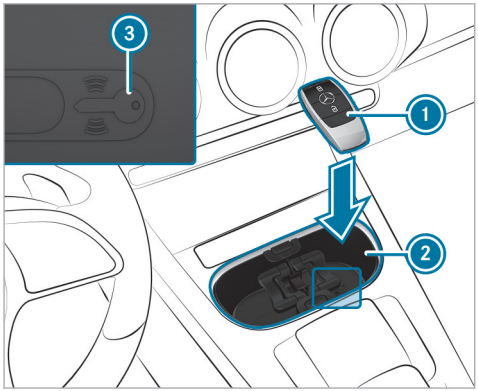

Marked space (example with cup holder without cover)

- Open the cover of marked space ② if necessary.
- Make sure that marked space ② is empty.
- Remove key ① from the key ring.
- Place key ① on symbol ③ in marked space ②.
  The vehicle will start after a short time.
  If you remove key ① from marked space ②, the vehicle can still be driven. For further engine starts, however, key ① must be located on symbol ③ in marked space ② during the entire journey.
- Have key ① checked at a qualified specialist workshop.

If the vehicle does not start:

- Place key ① in marked space ② and leave it there.
- Depress the brake pedal and start the vehicle using the start/stop button.
- Keep the brake pedal depressed until the vehicle starts.

ⓘ You can switch on the power supply or the vehicle with the start/stop button.

Observe any information regarding display messages that may be shown on the driver's display.

Starting the vehicle via Remote Online Services

Cooling or heating the vehicle interior before starting a journey

Ensure the following before starting the engine:

- The legal stipulations in the area where your vehicle is parked allow engine starting via smartphone.
- It is safe to start and run the engine where your vehicle is parked.
- The fuel tank is sufficiently full.
- The starter battery is sufficiently charged.

Charging the starter battery before starting a journey

You can receive a message on your smartphone when the state of charge of the starter battery is low. You can then start the vehicle with the smartphone to charge the battery. The vehicle is automatically switched off after ten minutes.

Ensure the following before starting the engine:

- The legal stipulations in the area where your vehicle is parked allow engine starting via smartphone.

- It is safe to start and run the engine where your vehicle is parked.
- The fuel tank is sufficiently full.

Starting the vehicle (Remote Online)

DANGER Risk of fatal injuries due to exhaust gases

Combustion engines emit poisonous exhaust gases such as carbon monoxide. Breathing in these exhaust gases is hazardous to health and results in poisoning.

▶ Never leave the engine and, if present, the stationary heater, running in an enclosed space without sufficient ventilation.

WARNING Risk of fire due to flammable materials in the engine compartment or on the exhaust system

Flammable materials may ignite.

▶ Therefore, regularly check that there are no flammable foreign materials in the engine compartment or on the exhaust system.

WARNING Risk of crushing or entrapment due to unintentional starting of the engine

Limbs could be crushed or trapped if the engine is started unintentionally during service or maintenance work.

▶ Always secure the engine against unintentional starting before carrying out maintenance or repair work.

WARNING Accident- and risk of injury with unsupervised children in the vehicle

If you leave children unattended in the vehicle, they can in particular

- Open doors and thereby endanger other persons or road users.
- get out of the car and are hit by traffic.
- Operate vehicle equipment and become trapped, forexample.

In addition, the children could also set the vehicle in motion, for exampleby:

- releasing the parking brake.
- change the gearbox setting.
- start the vehicle.

▶ Never leave children unattended in the vehicle.

▶ When leaving the vehicle, always take the SmartKey with you and lock the vehicle.

▶ Keep the key out of reach of children.

Requirements

- Park position P is selected.
- The anti-theft alarm system is not activated.
- The hazard warning light system is switched off.
- The bonnet is closed.
- The doors are closed and locked.
- The windows and sliding sunroof are closed.

▶ Start the vehicle using the smartphone. After every engine start, the engine will run for ten minutes.

You can carry out a maximum of two consecutive starting attempts. You must start the engine with the key before trying to start the vehicle with the smartphone again.

You can switch off the vehicle at any time as follows:

- Via the smartphone app
- By pressing the [ ] or [ ] button on the key

ⓘ Further information can be found in the smartphone app.

Securing the engine against starting before carrying out maintenance or repair work:

▶ Switch on the hazard warning light system or unlock the doors.

▶ Open a side window or the sliding sunroof.

Running-in notes

To preserve the engine during the first 1500 km:

- Drive at varying road speeds and engine speeds.
- No faster than 140 km/h.
- Drive the vehicle in drive mode [C] or [E].
- Shift to the next higher gear at the very latest when the needle reaches the last third before the red area in the rev counter.
- Do not shift down manually in order to brake.
- Avoid overstraining the vehicle, e.g. driving at full throttle.
- Do not depress the accelerator pedal past the pressure point (kickdown).
- Only increase the engine speed gradually and accelerate the vehicle to full speed after 1500 km.

This also applies when the engine or parts of the drivetrain have been replaced.

Please also observe the following running-in notes:

- In certain handling and driving safety systems, the sensors adjust automatically while a certain distance is being driven after the vehicle has been delivered or after repairs. Full system effectiveness is only reached when this teaching-in process has concluded.
- Brake pads, brake disks and tyres that are either new or have been replaced only achieve optimum braking effect and grip after driving several hundred kilometres. Compensate the reduced braking effect by applying greater force to the brake pedal.

Engine output and engine torque (Mercedes-AMG vehicles)

ⓘ The actual (maximum) values that can be achieved for engine output and engine torque may deviate from the certified values within the permissible tolerances according to country-specific guidelines (basis: UN-ECE No. 85 or country-specific guidelines).

Variables that can influence this include, for example:

- Location above sea level
- Fuel quality
- Outside temperature
- Operating temperature of the engine

The engine operating temperature warning lamp will remain lit until the engine has reached its operating temperature.

Engine output and engine torque will be reduced. Take this into account in your driving style.

When the engine operating temperature warning lamp goes out, full engine output and engine torque will be available to you.

Notes on driving

WARNING Risk of accident due to objects in the driver's footwell

Objects in the driver's footwell may impede pedal travel or block a depressed pedal.

This will jeopardise the operating and road safety of the vehicle.

- ▶ Stow all objects in the vehicle securely so that they cannot get into the driver's footwell.
- ▶ Make sure that there is always sufficient clearance for the pedals.
- ▶ Always fit the floor mats securely and as prescribed.
- ▶ Do not use loose floor mats and do not place floor mats on top of one another.

WARNING Risk of accident due to incorrect footwear

Incorrect footwear includes, for example:

- shoes with platform soles
- shoes with high heels
- slippers

There is a risk of an accident.

- ▶ Always wear suitable footwear so that you can operate the pedals safely.

WARNING Risk of accident if the vehicle is switched off while driving

If you switch off the vehicle while driving, safety functions are restricted or no longer available.

This may affect the power steering system and the brake force boosting, for example.

You will need to use considerably more force to steer and brake, for example.

- ▶ Do not switch off the vehicle while driving.

DANGER Risk of fatal injuries due to exhaust gases

Combustion engines emit poisonous exhaust gases such as carbon monoxide. Breathing in these exhaust gases is hazardous to health and results in poisoning.

- ▶ Never leave the engine and, if present, the stationary heater, running in an enclosed space without sufficient ventilation.

WARNING Risk of skidding and of an accident due to shifting down on slippery road surfaces

If you shift down on slippery road surfaces to increase the engine braking effect, the drive wheels may lose traction.

- Do not shift down on slippery road surfaces to increase the engine braking effect.

DANGER Risk of fatal injury due to poisonous exhaust gases

If the tailpipe is blocked or sufficient ventilation is not possible, poisonous exhaust gases such as carbon monoxide may enter the vehicle. This is the case, for example, if the vehicle gets stuck in the snow.

- Keep the tailpipe and the area around the vehicle free from snow when the engine or the stationary heater is running.
- Open a window on the side of the vehicle facing away from the wind to ensure an adequate supply of fresh air.

WARNING Risk of accident due to the brake system overheating

If you leave your foot on the brake pedal when driving, the brake system may overheat.

This increases the braking distance and the brake system can even fail.

- Never use the brake pedal as a footrest.
- Do not depress the brake pedal and the accelerator pedal at the same time while driving.

NOTE Engine damage due to excessively high engine speeds

The engine will be damaged if you drive with the engine in the overrevving range.

- Do not drive with the engine in the overrevving range.

NOTE Causing wear to the brake linings by permanently depressing the brake pedal

- Do not permanently depress the brake pedal while driving.
- To use braking effect of the engine, shift to a lower gear in good time.

NOTE Damage to the drivetrain and engine when pulling away

- Do not warm up the engine while the vehicle is stationary. Pull away immediately.
- Avoid high engine speeds and driving at full throttle until the engine has reached its operating temperature.

NOTE Damage to the catalytic converter due to non-combusted fuel

The engine is not running smoothly and is misfiring.

Non-combusted fuel may get into the catalytic converter.

- ▶ Only depress the accelerator pedal slightly.
- ▶ Have the cause rectified immediately at a qualified specialist workshop.

! **NOTE** Reduced battery life due to frequent short-distance trips

The 12 V battery may not be sufficiently charged when the vehicle is used only for short-distance trips. This reduces the life of the battery.

- ▶ Drive longer distances regularly to charge the battery.

! **NOTE** Vehicle damage due to failure to observe the maximum permissible clearance height

If the vehicle height exceeds the maximum permissible clearance height, the roof and other vehicle parts may be damaged.

- ▶ Please observe the indicated maximum clearance height.
- ▶ If the vehicle exceeds the permissible clearance height, do not drive in.
- ▶ Take the modified vehicle height in the case of roof superstructures or other carrier systems into account.

ⓘ Please bear in mind that all the speed values stated in this Owner's Manual are approximate and are subject to a certain tolerance.

Notes on driving with a roof load, trailer or fully laden vehicle

When driving with a laden roof luggage rack or trailer and with a fully laden or fully occupied vehicle the handling and steering characteristics of your vehicle change.

Therefore observe the following notes:

- Do not exceed permissible roof load and trailer load. Also observe the information in the technical data.
- Distribute the roof load and vehicle load evenly and place heavy objects towards the bottom. Also observe the notes on loading the vehicle in this regard (→ page 183).
- Drive carefully, avoid abrupt moving off, braking and steering and fast cornering.

Notes on driving on salt-strewn roads

The braking effect is limited on salt-strewn road surfaces.

Therefore, observe the following notes:

- Due to salt build-up on the brake disks and brake pads, the braking distance can increase considerably or result in one-sided braking.
- Maintain a much greater safety distance to the vehicle travelling ahead.

Remove salt build-up as follows:

- Brake occasionally, paying attention to the traffic conditions
- Carefully press the brake pedal at the end of the journey and when starting the next journey

Notes on aquaplaning

Aquaplaning can take place if a certain depth of water has built up on the road surface.

Observe the following notes during heavy rainfall or in conditions in which aquaplaning may occur:

- Reduce speed
- Avoid tyre ruts.
- Avoid sudden steering movements.
- Brake carefully

ⓘ Also observe the notes on regularly checking wheels and tyres (→ page 31).

Notes on driving through water on the road
Water ingress can damage the engine, electrics and transmission.

Water can also enter the air intake of the engine and cause engine damage.

Observe the following if you must drive through water:

- The water, when calm, may reach no higher than the lower edge of the vehicle body.
- Drive at a walking pace at most; water can otherwise enter the vehicle interior or engine compartment.
- Vehicles travelling ahead, or oncoming vehicles, can create waves which may exceed the maximum permissible depth of the water.

The braking effect of the brakes is reduced after fording. Brake carefully, paying attention to the traffic conditions until braking power has been fully restored.

ECO start/stop function

ECO start/stop function

ⓘ Depending on the engine, the ECO start/stop function is not available in all drive programs. Observe the status display on the driver's display concerning this.

ⓘ **Plug-in hybrid:** this function is not available.

The engine will be switched off automatically in the following situations if all vehicle conditions for an automatic engine stop are met:

- You brake the vehicle to a standstill in transmission position D or N.
- **Vehicles with a 48 V on-board electrical system:** you depress the brake pedal when travelling at a low speed.

If the system has detected one of the following situations, the engine will not stop:

- You stop at a stop sign and there is no vehicle in front of you.
- The vehicle that stopped in front of you pulls away again.
- You manoeuvre, turn the steering wheel sharply or engage reverse gear.

ⓘ If the system detects an intelligent stop inhibitor, e.g. a stop sign, the engine will not stop. If you activate the HOLD function or engage the park position P, the engine can be switched off in spite of an intelligent stop inhibitor.

The engine will restart automatically in the following cases:

- You engage transmission position D or R.
- You depress the accelerator pedal.

- The vehicle requires an automatic engine start.
- You release the brake pedal.
- **Vehicles with a 48 V on-board electrical system:**
  - You release the brake pedal on a downhill gradient and the vehicle does not roll.
  - The vehicle rolls on a downhill gradient and does not automatically enter glide mode at 20 km/h.

ECO start/stop function symbols on the driver's display:

- The [Ⓐ] symbol (green) appears when the vehicle is at a standstill: the engine was switched off by the ECO start/stop function.
- The [Ⓐ] symbol (yellow) appears when the vehicle is at a standstill: not all vehicle conditions for an engine stop have been met.
- Neither the [Ⓐ] symbol nor the [Ⓐ] symbol appears when the vehicle is at a standstill: an intelligent stop inhibitor, e.g. a stop sign, has been detected.
- The [Ⓐ OFF] symbol appears: the ECO start/stop function is deactivated or there is a malfunction.

If the engine was switched off by the ECO start/stop function and you leave the vehicle, a warning tone will sound and the engine will not be restarted. In addition, the following display message will appear on the driver's display:

Vehicle is operational Switch off vehicle before exiting

If you do not switch off the vehicle, it will automatically be switched off after three minutes.

Switching the ECO start/stop function on/off

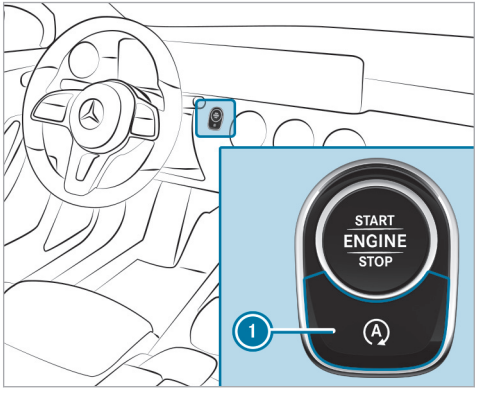

▶ Press button ①.
A display will appear on the driver's display when you switch the ECO start/stop function on/off.

ⓘ [Ⓐ OFF] will be continuously shown on the driver's display while the ECO start/stop function is deactivated.

Switching the ECO start/stop function on or off using the steering wheel button (Mercedes-AMG vehicles)

Observe the notes on the ECO start/stop function in the vehicle Owner's Manual.

ⓘ You can also switch the ECO start/stop function on or off via the multimedia system.

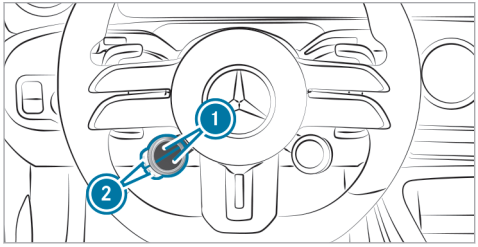

▶ Press the upper or lower ① display button repeatedly, until it displays the Ⓐ symbol.

ⓘ If the display button does not show the symbol, then it is hidden. How functions are displayed and the order in which they are displayed can be set in the multimedia system (→ page 251).

▶ Press corresponding button ②.

The symbol indicates the current status of the ECO start/stop function:

- Ⓐ OFF (red): switched off
- Ⓐ (green): activated
- Ⓐ (yellow): inactive

ECO display function

ⓘ Depending on the model and equipment, your vehicle will have one of the following representations of the ECO display.

The ECO display summarises your driving characteristics from the start of the journey to its completion and assists you in achieving the most economical driving style.

The ECO display assesses the following criteria for an economical driving style:

- Coasting at the right times
- Consistent speed
- Moderate acceleration

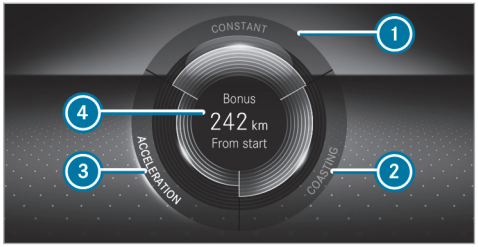

The lettering in the segment will light up brightly, the outer edge will light up and the segment will fill up when the following driving style is adopted:

- ① Steady speed
- ② Gentle deceleration and rolling
- ③ Moderate acceleration

The lettering in the segment will be grey, the outer edge will be dark and the segment will empty when the following driving style is adopted:

- ① Fluctuations in speed
- ② Heavy braking

- ③ Sporty acceleration

The ECO display will show you when you have driven economically:

- The three segments will fill up completely at the same time
- The edges around all three segments will light up

The additional range achieved as a result of your driving style in comparison with a driver with a very sporty driving style will be shown in the centre of display ④. The range displayed does not indicate a fixed reduction in consumption.

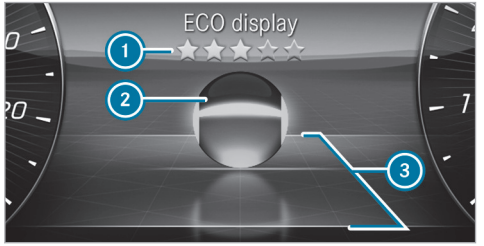

The ECO display shows an evaluation of your driving style on the driver's display depending on the situation. This enables you to check the efficiency of your driving style and adjust it if necessary. The ECO display menu shows a ball ② that will roll forwards or backwards on a stylised road in the direction of travel according to the driving characteristics.

Above and below the road, lines mark the area for an efficient driving style ③. Ball ② will light up in green if it is rolling within these lines. Outside the lines, the ball will light up in orange.

The overall assessment of your driving style "from start" is indicated using stars ①. It starts with five empty stars, which you can fill one after the other if you drive efficiently. When all five stars are filled, a glow will appear in the background.

ⓘ You can call up the ECO display function via the Classic menu (→ page 380).

ECO Assist function (vehicles with 48 V on-board electrical system)

For plug-in hybrids, note the ECO Assist information (→ page 247).

ⓘ ECO Assist is active only in drive programs [E] and [C].

ECO Assist analyses data for the vehicle's expected route. This allows the system to optimally adjust the driving style for the route ahead, save fuel and recuperate. If the system detects an event ahead and the vehicle nears the event, ECO Assist will calculate the optimum speed for maximum fuel economy and recuperative energy based on the distance, speed and downhill gradient.

If the deceleration provided by ECO Assist is not sufficient, you must also brake with the service brake. This will be the case particularly if, for example, you pull away again in slow-moving traffic and the distance to the vehicle in front is very short.

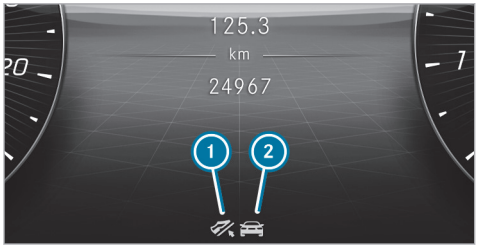

1 "Foot off the accelerator" recommendation
2 Route event ahead

If a route event or vehicle that requires an adjustment of your driving style for more efficiency is detected ahead, corresponding symbol 2 and the symbol (grey) will be displayed.

If you release the accelerator pedal, the symbol will turn green and recuperation in overrun mode will be initiated. If the deceleration is not sufficient, also apply the service brake. If ECO Assist intervenes for a route event ahead (not for a vehicle in front) and you then press the accelerator pedal again, you will end control by ECO Assist.

The ECO Assist display will be hidden again in the following cases:

- You do not react to the ECO Assist recommendation for a long time.
- You depress the accelerator pedal while ECO Assist is intervening for a route event ahead (not for a vehicle in front).
- ECO Assist cannot identify any further recommendations from the route ahead.

Depending on equipment, ECO Assist will detect following route events 2 in addition to the vehicle in front :

- Roundabout
- T-junction
- Downhill gradient
- Speed limit

ⓘ In drive program C, ECO Assist will react only to the "vehicle in front" route event without displaying the route event or recommendation.

System limits

If the calculated route is adhered to when route guidance is active, ECO Assist will operate with greater accuracy. The basic function is also available without active route guidance. Not all information and traffic situations can be foreseen. The quality depends on the map data.

ECO Assist is only an aid. The driver is responsible for keeping a safe distance from the vehicle in front, for vehicle speed and for braking in good time.

The system may be impaired or may not function in the following situations:

- If visibility is poor, e.g. due to insufficient illumination of the road, highly variable shade conditions, rain, snow, fog or heavy spray.
- If there is glare, e.g. from oncoming traffic, direct sunlight or reflections.
- If the windscreen is dirty in the vicinity of the multifunction camera.
- If the multifunction camera is misted up, damaged or obscured.

- If road signs are hard to detect, e.g. due to dirt, snow or insufficient lighting, or because they are obscured.
- If the information in the navigation system's digital map is incorrect or out of date.
- If signs are ambiguous, e.g. road signs in roadworks or in adjacent lanes.
- If the radar sensors are dirty or obscured.
- When you drive on roads with steep gradients.
- If there are narrow vehicles in front, such as bicycles or motorcycles.

Recuperative brake system (plug-in hybrid)

Function of the recuperative brake system

ⓘ The function is only available for plug-in hybrids.

Depending on the selected recuperation level, the electric motor is operated as an alternator when in overrun mode and during braking in order to charge the high-voltage battery while driving. As soon as you take your foot off the accelerator pedal when the vehicle is in motion and in transmission position D, recuperation in overrun mode is initiated.

The higher the recuperation, the more sharply the vehicle is braked when coasting and the more electrical energy is fed into the high-voltage battery.

The deceleration in overrun mode may not be sufficient depending on the driving conditions. Decelerating to a standstill is not possible. Also brake with the service brake if necessary. Always adapt your speed to the driving conditions and keep a sufficient distance.

The recuperative brake system has the following characteristics:

- supports braking with electronically controlled brake force boosting
- converts the kinetic energy of the vehicle into electric energy

ⓘ If you brake hard, the mechanical brake is also used. This means that the maximum recuperative energy cannot be recovered. The more you accelerate and brake in an anticipatory manner, the more efficiently energy can be recuperated.

System limits

The braking effect of the electric motor during recuperation in overrun mode may be reduced or may not be available at all in the following situations:

- when the high-voltage battery charge level increases
- if the high-voltage battery is not yet at a normal operating temperature

In these cases, the desired deceleration is set by the brake control system.

Manually setting recuperative deceleration

ⓘ This function is only available for a plug-in hybrid.
You can use the steering wheel gearshift paddles to adjust the intensity of recuperation in drive programs H, B and EL.

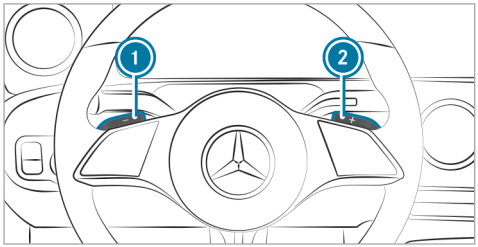

The following recuperation levels are available:

- D AUTO Intelligent and anticipatory recuperation with ECO Assist (→ page 247)
- D + No recuperation: the vehicle rolls freely
- D Normal recuperation
- D – Increased recuperation: strong deceleration in overrun mode, e.g. for driving on downhill gradients

Standard setting:

- D AUTO: if the ECO Assist function is activated in the multimedia system (→ page 249).
- D: if the ECO Assist function is deactivated in the multimedia system.

ⓘ D AUTO is only available if the ECO Assist function is activated in the multimedia system and if the function of the radar sensors is not impaired. Also observe the information on vehicle sensors and cameras (→ page 303).

▶ **To increase recuperation:** briefly pull gearshift paddle ①.

▶ **To reduce recuperation:** briefly pull gearshift paddle ②.

▶ **Standard setting:** pull and hold gearshift paddle ① or ②, or engage transmission position D again.

ⓘ When the vehicle is started again, the standard setting is also set.

The driver's display shows the currently selected recuperation level next to the transmission position display.

ECO Assist (plug-in hybrid)

ECO Assist function

ⓘ The following function depends on the equipment and the country and is available only for plug-in hybrids.

ECO Assist analyses data for the vehicle's expected route. This allows the system to help optimally adjust your driving style for the route ahead, save fuel and recuperate. If the system detects an event ahead and the vehicle nears the event, ECO Assist will calculate the optimum speed for maximum fuel economy and recuperative energy based on the distance, speed and downhill gradient.

If the deceleration provided by ECO Assist is not sufficient, you must also brake with the service brake. This will be the case particularly if, for example, you pull away again in slow-moving traffic and the distance to the vehicle in front is very short.

The function will be active in the following circumstances:

- The function is activated in the multimedia system (→ page 249).
- The D AUTO recuperation level is selected (→ page 246).
- M manual gearshifting is not activated.
- Drive program S is not selected.

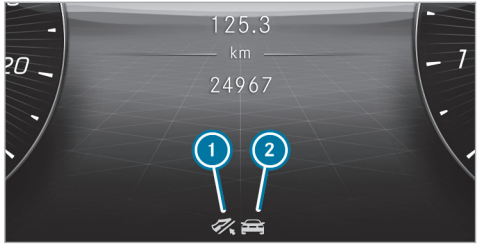

1 "Foot off the accelerator" recommendation
2 Route event ahead

If a route event that you can deal with more efficiently by adjusting your driving style is detected ahead, corresponding symbol 2 and the symbol will be displayed in grey.

If you release the accelerator pedal, the symbol will turn green and recuperation in overrun mode will be initiated. If the deceleration is not sufficient, also apply the service brake.

If ECO Assist intervenes for a route event ahead and you press the accelerator pedal, you will end control by ECO Assist. This does not apply in the case of a vehicle in front.

The ECO Assist display will be hidden again in the following cases:

- You do not react to the ECO Assist recommendation for a long time.
- You press the accelerator pedal while ECO Assist is intervening because of a route event ahead. This does not apply in the case of a vehicle in front.
- ECO Assist cannot identify any further recommendations from the route ahead.

In addition to a vehicle in front , ECO Assist can detect the following route events 2 depending on the vehicle's equipment:

- Roundabout
- Sharp bend
- Junction
- T-junction
- Downhill gradient
- Speed limit

System limits

If the calculated route is adhered to when route guidance is active, ECO Assist will operate with greater accuracy. The basic function is also available without active route guidance. Not all information and traffic situations can be foreseen. The quality depends on the map data.

ECO Assist is only an aid. The driver is responsible for keeping a safe distance from the vehicle in front, for vehicle speed and for braking in good time.

The system may be impaired or may not function in the following situations:

- If there is poor visibility, e.g. due to insufficient illumination of the road, highly variable shade conditions, rain, snow, fog or heavy spray.
- If there is glare, e.g. from oncoming traffic, direct sunlight or reflections.
- If the windscreen is dirty in the vicinity of the multifunction camera.
- If the multifunction camera is misted up, damaged or obscured.
- If road signs are hard to detect, e.g. due to dirt, snow or insufficient lighting, or because they are obscured.
- If the digital road map of the navigation system has incorrect or outdated information.
- If signs are ambiguous, e.g. road signs in roadworks or in adjacent lanes.
- If the radar sensors are dirty or obscured.
- When you drive on roads with steep gradients.
- If there are narrow vehicles in front, such as bicycles or motorcycles.

Activating and deactivating ECO Assist

Multimedia system:

→ [⌂] ▸▸ Settings ▸▸ Assistance ▸▸ Driving

▶ Activate or deactivate the function.

Function of the route-based operating-mode strategy (plug-in hybrid)

ⓘ The following function is country-dependent and available only in conjunction with an integrated navigation system.

The route-based operating-mode strategy will be active in the following circumstances:

- Drive program [H] is selected .
- The Route-based option is selected for drive program [H] on the DYNAMIC SELECT menu (→ page 254).
- Route guidance is active.
- The state of charge of the high-voltage battery is sufficient.

When the function is active, data on the further course of the route will be analysed. This includes e.g. road type, speed limits and elevation data.

The hybrid system will then adapt the operating strategy to the further course of the route:

- Use of electrical energy and the combustion engine will be adapted.
- The state of charge of the high-voltage battery will be controlled accordingly.
- Electrical energy will be reserved especially for electric mode, e.g. urban route sections or areas with low emission zones.
- The vehicle will automatically select the operating mode.

AMG Real Performance Sound

Selecting a sound characteristic with the steering-wheel button

ⓘ You can select a comfortable (Balanced) or a sporty (Powerful) sound characteristic using the steering-wheel button or the multimedia system (→ page 256).

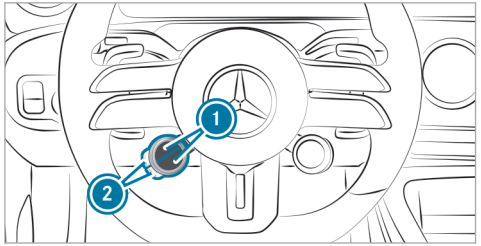

▶ Press upper or lower display button ① repeatedly, until it displays the symbol.

ⓘ If the display button does not show the symbol, then it is hidden. How functions are displayed and the order in which they are displayed can be set in the multimedia system (→ page 251).

▶ Press corresponding button ②.

The colour of the button symbol indicates the currently selected sound characteristic:

- **Blue:** Balanced – comfortable
- **Red:** Powerful – sporty

Function of the AMG steering wheel buttons

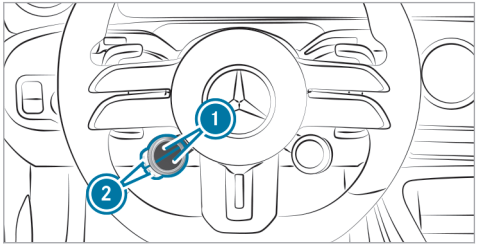

The AMG steering wheel buttons are an additional control array with two buttons on the steering wheel.

You can assign two vehicle functions of your choice to these buttons. Repeatedly pressing the display keys ① in the upper and lower area allows you to switch between the available functions for the button concerned ②. The display keys ① show the function selected.

Depending on the equipment level, the following functions are available:

- ESP® (→ page 306)
- AMG RIDE CONTROL (→ page 348)
- Manual gearshifting (→ page 263)
- ECO start/stop function (→ page 243)
- Camera views (→ page 353)
- AMG DYNAMICS (→ page 252)

You also have a choice of all the functions you have recorded as favourites in the multimedia system. Information about favourites

ⓘ Individual functions can be hidden. How functions are displayed and the order in which they are displayed can be set in the multimedia system (→ page 251).

If you have assigned a function to one of the display keys ①, you can operate this function with the corresponding button ②.

The assignment of display keys ① is saved to memory even after the vehicle is restarted. However, the operating status of the relevant function is reset to the basic setting.

Setting the AMG steering wheel buttons

Multimedia system:

→ [⌂] ▸▸ Settings ▸▸ System
▸▸ Control elements
▸▸ AMG steering-wheel buttons

ⓘ The SETTINGS SELECT menu can also be called up using the DYNAMIC SELECT button or by pressing and holding the respective display button.

The left display buttons on the steering wheel can be set in the SETTINGS SELECT menu.

▶ In the media display, select the upper or lower display button and switch to the editing mode by means of a long press.

▶ Press [+] and select the desired function from the list.
The selected function is assigned to the corresponding display button and can now be called up directly by simply pressing it.

Deleting button assignment

▶ Select the upper or lower display button and switch to editing mode by pressing and holding it.

▶ Press [⊗] to delete the selected display button assignment.

DYNAMIC SELECT

Function of DYNAMIC SELECT

DYNAMIC SELECT allows a drive program to be selected quickly according to the current driving situation or the desired vehicle characteristics. You can select the following drive programs.

ⓘ Depending on the engine and equipment, the vehicle will have different drive programs.

The drive program selected appears in the driver's display .

[I*] Individual

- Custom settings (→ page 254)
- Custom settings (plug-in hybrid)

[S] Sport

- Maximum output is available
- Sporty driving
- Sporty, but with an emphasis on stability
- Enables a sporty driver to adopt a more active driving style
- Driving with the combustion engine and reinforced boost effect (plug-in hybrid)
- Deactivation of the combustion engine when stationary (plug-in hybrid)
- Only suitable for good road conditions, a dry road surface and a clear stretch of road

[H] Hybrid (plug-in hybrid)

- Comfortable and economical driving
- Balance between traction and stability
- Recommended for all road conditions
- Full development of all intelligent hybrid functions
- Adjustable recuperation in overrun mode

- The selection of the matching drive type by the hybrid system depends on the driving conditions and the distance

C Comfort

- Comfortable and economical driving
- Balance between traction and stability
- Recommended for all road conditions

EL Electric (plug-in hybrid)

- Electric mode – driving without the combustion engine is possible up to approx. 140 km/h
- Adjustable recuperation in overrun mode
- Adaptation of Active Distance Assist DISTRONIC for electric mode
- Depending on the equipment, the maximum set speed for cruise control, limiter and Active Distance Assist DISTRONIC can be limited to the maximum electrically drivable speed
- Activation of the combustion engine via the pressure point of the accelerator pedal (kickdown)

B Battery Hold (plug-in hybrid)

- Prioritises maintaining the state of charge of the high-voltage battery, e.g. for subsequent journeys in the inner city/low emission zones
- The selection of the matching drive type by the hybrid system depends on the driving conditions and the distance
- Adjustable recuperation in overrun mode

E Eco

- Particularly economical driving
- Balance between traction and stability
- Recommended for all road conditions

ⓘ The ESP® settings in drive programs E and C are designed for stability. Therefore, choose one of these drive programs especially when transporting roof loads, in trailer operation and when the vehicle is fully loaded or fully occupied.
Plug-in hybrid: this also applies to drive programs H, EL and B.

Depending on the drive program, the following systems will change their characteristics:

- Drive
  - Engine and transmission management
  - Active Distance Assist DISTRONIC
  - availability of Glide mode
- ESP®
- **Vehicles with adaptive damping adjustment:** suspension
- Steering

Function of DYNAMIC SELECT (Mercedes-AMG vehicles)

DYNAMIC SELECT allows a drive program to be selected quickly according to the current driving situation or the desired vehicle characteristics.

You can select the following drive programs:

- Slippery
  - Optimised pulling away and driving characteristics in wintry and slippery road conditions

- [C] Comfort
  - Comfortable and economical driving
- [I*] Individual
  - Customised settings for drive, suspension, steering and ESP®
- [S] Sport
  - Sporty driving
  - Balance between stability and sportiness
  - Only suitable for good road conditions, a dry road surface and a clear stretch of road
- [S+] Sport+
  - Particularly sporty driving
  - Only suitable for good road conditions, a dry road surface and a clear stretch of road

Mercedes-AMG recommends selecting drive program [C] when in city traffic or stop-and-go traffic.

Depending on the drive program selected, the following vehicle characteristics will change:

- Drive
- AMG DYNAMICS
  - The four agility functions, Basic, Advanced, Pro and Master, will be selected automatically depending on the drive program.
  - The steering, shift timing point, all-wheel drive and stabilisation functions will be adapted to the selected drive program.
  - When ESP® is activated, the Pro agility function will be selected in drive program [🏁]. The Master function will be selected automatically when ESP® is switched to SPORT [ESP SPORT] or is switched off [ESP OFF].
- Real Performance Sound
- Suspension
- Steering

ⓘ You can set the drive program characteristics using the multimedia system (→ page 256).

ⓘ You can adjust certain agility functions of AMG DYNAMICS using the AMG steering-wheel buttons.

Selecting the drive program

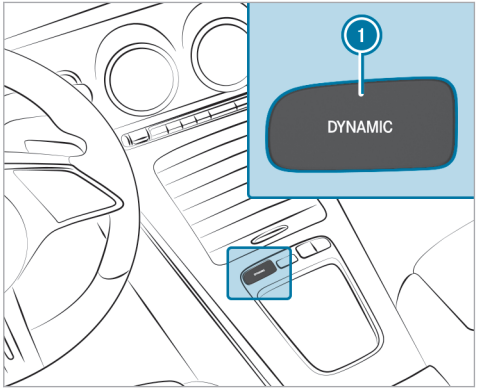

▶ Press DYNAMIC SELECT button ① repeatedly until the selected drive program appears on the driver's display.

or

▶ Press DYNAMIC SELECT button ① and select the drive program on the DYNAMIC SELECT menu on the central display.

Selecting a drive program (Mercedes-AMG vehicles)

Selection with right-hand steering-wheel button

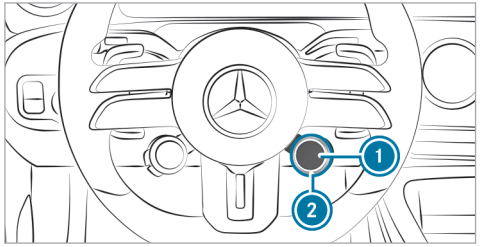

▶ Turn the rotary switch ②.
The selected drive program will appear on display button ① and on the driver's display.

ⓘ Individual drive programs may not be shown. How drive programs are displayed and the order in which they are displayed can be set in the multimedia system (→ page 256).

▶ **To set the drive program properties:** press display button ①.

Configuring DYNAMIC SELECT in the multimedia system

Multimedia system:

↳ [⌂] ▸▸ Settings ▸▸ Vehicle ▸▸ DYNAMIC SELECT

Setting drive program I

▶ Select [I•] Individual.

▶ Select and set a category.

ⓘ A sporty ESP mode can be set in conjunction with a sporty suspension mode.

Setting the H drive program (plug-in hybrid)

▶ Select Hybrid.

▶ Select Route-based or Standard.
If route guidance is active and the Route-based option has been activated, the electrical energy is distributed intelligently over the entire route. In built-up areas, electric mode is preferred, while on the motorway the combustion engine is used.

With the Standard option, the vehicle drives in its standard drive program ([EL] Electric or [H] Hybrid). There is no distribution of electrical energy over the entire route. The high-voltage battery is exhausted and the vehicle is then driven by the combustion engine.

Switching the reset display on/off

▶ Activate or deactivate Ask when starting.

ⓘ This function must be activated for each user profile separately. Only when this function is activated will the drive program and ECO start/stop setting for the previous journey be saved for the respective user profile.

Function on: the next time the vehicle is started a prompt appears asking whether the last active drive program should be restored. If the ECO start/stop function was deactivated, an additional

prompt appears asking if the function should remain deactivated.

ⓘ The prompt appears only if the previously active settings deviate from the standard settings.

Function off: the next time the vehicle is started the [C] drive program is set automatically. The ECO start/stop function is activated automatically.

Switching the reset display on/off (plug-in hybrid)

▶ Activate or deactivate Ask when starting.

ⓘ This function must be activated for each user profile separately. The drive program for the respective user profile of the last driver is only stored if this function is activated.

Function on: the next time the vehicle is started a prompt appears asking whether the last active drive program should be restored.

ⓘ The prompt appears only if the previously active settings deviate from the standard settings.

Function off (plug-in hybrid): if the [EL] drive program was the last one active, and all requirements for the drive program are fulfilled, it will be selected automatically the next time the vehicle is started. If another drive program was active, then the [H] drive program is set automatically.

Displaying vehicle data

Multimedia system:

→ [⌂] ▸▸ Info

▶ Select Vehicle.
The vehicle data is displayed.

Displaying engine data

Multimedia system:

→ [⌂] ▸▸ Info

▶ Select Engine.
The engine data is displayed.

ⓘ The actual maximum values that can be achieved for engine output and engine torque may deviate from the certified values within the country-specific guidelines for permissible tolerances (basis: UN-ECE No. 85 or country-specific guidelines).

Variables that can influence this are, for example:

- Sea level
- Fuel quality
- Outside temperature
- Operating temperature of the engine

Adjust your driving style accordingly.
The [🌡] warning lamp in the driver's display is on until the engine has reached operating temperature.

ⓘ The values displayed serve only as orientation. The values for engine output and engine torque shown in the media display may deviate from the actual values.

ⓘ The [🌡] warning lamp to show the power output limitation after starting the vehicle is not available in all vehicle models.

Calling up the fuel consumption indicator

Multimedia system:

→ [⌂] ▸▸ Info

▶ Select Consumption.
The current and average fuel consumption will be displayed.

Setting AMG DYNAMIC SELECT in the MBUX multimedia system

Multimedia system:

→ [⌂] ▸▸ Settings ▸▸ Vehicle ▸▸ DYNAMIC SELECT

Overview of the AMG DYNAMIC SELECT menu

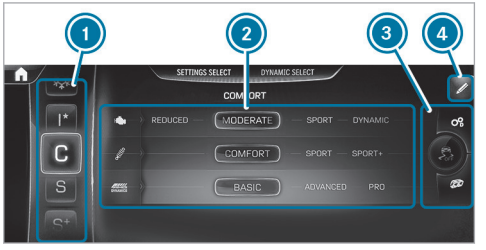

(Example of representation) Representation and arrangement of content equipment-dependent.

1. Drive programs
2. AMG drive program settings
3. ESP and quick-access buttons®(→ page 306)
4. Edits the quick-access buttons

ⓘ The AMG DYNAMIC SELECT menu can also be called up using the DYNAMIC SELECT button.

▶ Select the appropriate drive program.

The settings of the drive programs can be adjusted individually.

▶ Select the desired tab on the left and make the relevant setting.

Setting options for the drive programs (equipment-dependent):

- AMG DYNAMICS:
  Basic/Advanced/Pro/Master
- Suspension:
  Comfort/Sport/Sport+
- Sound:
  Balanced/Powerful
- Drive (can only be set in the [I*] drive program):

Reduced/Moderate/Sport/Dynamic

Automatic transmission

DIRECT SELECT lever

Function of the DIRECT SELECT lever

WARNING Risk of accident due to incorrect gearshifting

If the engine speed is higher than the idle speed and you engage the transmission position D or R, the vehicle may accelerate sharply.

▶ If you engage the transmission position D or R when the vehicle is at a standstill, always depress the brake pedal firmly and do not accelerate at the same time.

WARNING Accident- and risk of injury with unsupervised children in the vehicle

If you leave children unattended in the vehicle, they can in particular

- Open doors and thereby endanger other persons or road users.
- get out of the car and are hit by traffic.
- Operate vehicle equipment and become trapped, forexample.

In addition, the children could also set the vehicle in motion, for exampleby:

- releasing the parking brake.
- change the gearbox setting.
- start the vehicle.

▶ Never leave children unattended in the vehicle.

▶ When leaving the vehicle, always take the SmartKey with you and lock the vehicle.

▶ Keep the key out of reach of children.

Use the DIRECT SELECT lever to switch the transmission position. The current transmission position will be shown on the driver's display.

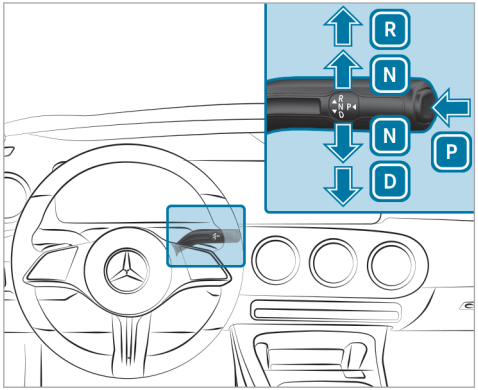

P Park position
R Reverse gear
N Neutral
D Drive position

Engaging reverse gear R

WARNING Risk of accident due to incorrect gearshifting

If the engine speed is higher than the idle speed and you engage the transmission position D or R, the vehicle may accelerate sharply.

- If you engage the transmission position D or R when the vehicle is at a standstill, always depress the brake pedal firmly and do not accelerate at the same time.

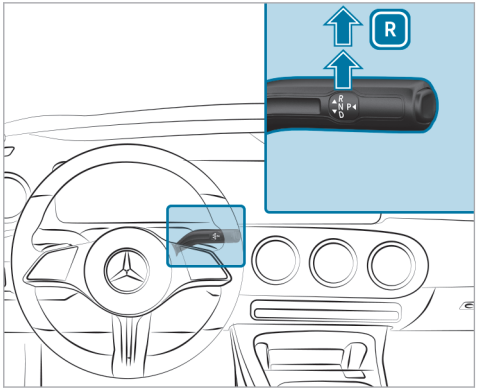

- Depress the brake pedal and push the DIRECT SELECT lever upwards past the first point of resistance.

Engaging neutral N

WARNING Risk of accident due to incorrect gearshifting

If the engine speed is higher than the idle speed and you engage the transmission position D or R, the vehicle may accelerate sharply.

- If you engage the transmission position D or R when the vehicle is at a standstill, always depress the brake pedal firmly and do not accelerate at the same time.

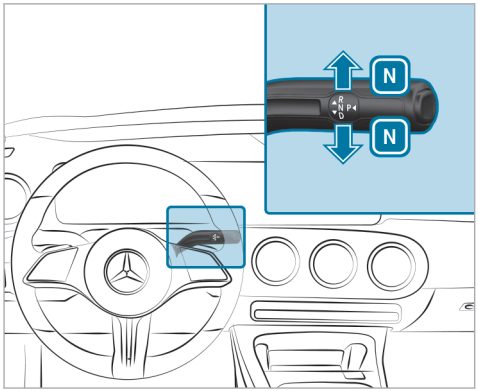

▶ Depress the brake pedal and push the DIRECT SELECT lever up or down to the first point of resistance.

ⓘ To shift into neutral [N] with the vehicle switched on, push the selector lever up or down for several seconds to the first point of resistance.

Subsequently releasing the brake pedal will allow you to move the vehicle freely, e.g. to push it or tow it away.

Proceed as follows if you want the automatic transmission to remain in neutral [N], even if the vehicle is switched off or the driver's door is opened:

▶ Depress the brake pedal and engage neutral [N] when the vehicle is at a standstill.

▶ Release the brake pedal.

▶ Switch off the vehicle.

The message reading Risk of vehicle rolling away N activated manually No automatic switch to P will appear on the driver's display.

ⓘ If you then exit the vehicle leaving the key in the vehicle, the automatic transmission will remain in neutral [N].

The park position [P] is automatically re-engaged as soon as one of the following conditions is met:

- You switch to transmission position [D] or [R].
- You press the button [P].

F177 0066 02

Engaging park position P

⚠ **WARNING** Accident- and risk of injury with unsupervised children in the vehicle

If you leave children unattended in the vehicle, they can in particular

- Open doors and thereby endanger other persons or road users.
- get out of the car and are hit by traffic.
- Operate vehicle equipment and become trapped, forexample.

In addition, the children could also set the vehicle in motion, for exampleby:

- releasing the parking brake.
- change the gearbox setting.
- start the vehicle.

▶ Never leave children unattended in the vehicle.

▶ When leaving the vehicle, always take the SmartKey with you and lock the vehicle.

▶ Keep the key out of reach of children.

NOTE Damage due to engaging park position P while the vehicle is rolling

If you shift the transmission into park position P while the vehicle is rolling, the transmission may be damaged.

- If the vehicle is rolling, do not open a door.
- Only engage the park position P when the vehicle is stationary.

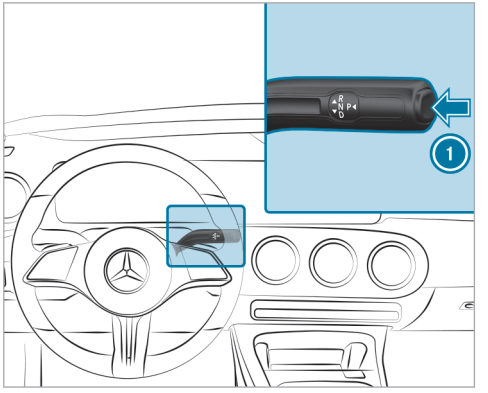

- Observe the notes on parking the vehicle (→ page 290).
- Depress the brake pedal until the vehicle comes to a standstill.
- When the vehicle is stationary, press button 1.
  When the P transmission position display is shown, park position is engaged. If the P transmission position display is not shown, apply the parking brake and secure the vehicle to prevent it from rolling away.

ⓘ Depending on the situation, it may take a short time until P is engaged. Therefore, always pay attention to the transmission position display.

Park position P will be engaged automatically if one of the following conditions is met:

- You switch the stationary vehicle off in transmission position D or R.
- You open the driver's door when the vehicle is stationary in transmission position D or R.
- When the vehicle is rolling, you switch if off in transmission position D or R and bring it to a standstill.
- When the vehicle is rolling, you shift to transmission position N, bring the vehicle to a standstill and open the driver's door when the vehicle is stationary.
- Engaging park position P automatically is required by the vehicle.

ⓘ To manoeuvre with an open driver's door, open the driver's door while the vehicle is stationary and engage transmission position [D] or [R] again.

ⓘ At very low outside temperatures below approximately -20 °C, it may not be possible to shift the transmission from [P] to another transmission position when the vehicle is switched off. If this is the case, change the transmission position only while the vehicle is switched on.

Engaging drive position D

⚠ **WARNING** Risk of accident due to incorrect gearshifting

If the engine speed is higher than the idle speed and you engage the transmission position [D] or [R], the vehicle may accelerate sharply.

▶ If you engage the transmission position [D] or [R] when the vehicle is at a standstill, always depress the brake pedal firmly and do not accelerate at the same time.

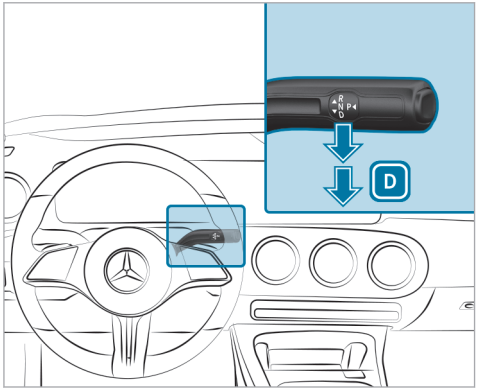

▶ Depress the brake pedal and push the DIRECT SELECT lever down past the first point of resistance.

When the automatic transmission is in transmission position [D], it will shift gears automatically. This depends, among other things, on the following factors:

- The selected drive program
- The position of the accelerator pedal
- The driving speed

Problems with the transmission

The transmission has a faulty gear shift

Possible cause:

- the transmission is losing oil.

▶ Have the transmission checked at a qualified specialist workshop immediately.

The acceleration characteristics get worse, and the transmission no longer shifts.

Possible cause:

- the transmission is in emergency operation mode.

- ▶ Stop the vehicle in accordance with the traffic conditions.
- ▶ Shift the transmission to position P.
- ▶ Switch off the vehicle.
- ▶ Wait at least ten seconds.
- ▶ Start the vehicle again.
- ▶ Shift the transmission to position D.
- ▶ Have the transmission checked at a qualified specialist workshop immediately.

Rocking the vehicle free

Rocking the vehicle free may help to free the vehicle if it has become stuck in slush or snow.

To rock the vehicle free, move the DIRECT SELECT lever upwards and downwards past the point of resistance to switch between transmission positions D and R.

ⓘ The maximum design speed for switching between D and R is approximately 9 km/h.

Manual shifting

ⓘ For plug-in hybrids, observe the information regarding the regenerative brake system (→ page 246).

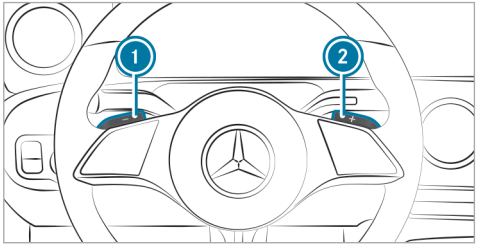

When the automatic transmission is shifted to position D, you can shift it manually with the steering wheel gearshift paddles. If permitted, the automatic transmission will shift to a higher or lower gear depending on the steering wheel gearshift paddle pulled.

You have two options for manually shifting the automatic transmission:

- Temporary setting
- Permanent setting

The gears are shifted automatically when manual shifting is deactivated.

Temporary setting:

▶ **To activate:** pull steering wheel gearshift paddle ① or ②.
Manual shifting will be activated for a short time. The transmission position display will show M and the current gear.

ⓘ How long manual shifting stays activated depends on various factors.

Manual shifting can be deactivated automatically in the following cases:

- When the drive program is changed
- When the vehicle is restarted
- When transmission position D is engaged again
- Driving style

▶ **To shift up:** pull steering wheel gearshift paddle ②.

- **To shift down:** pull steering wheel gearshift paddle ①.
  If you pull and hold steering wheel gearshift paddle ①, the transmission will shift down to the lowest possible gear.
- **To deactivate:** pull and hold steering wheel gearshift paddle ②.
  The transmission position display will show D.

ⓘ You can activate or deactivate manual shifting permanently in the multimedia system.

Manual shifting (Mercedes-AMG vehicles)

ⓘ You can also activate and deactivate manual gearshifting via the multimedia system (→ page 264).

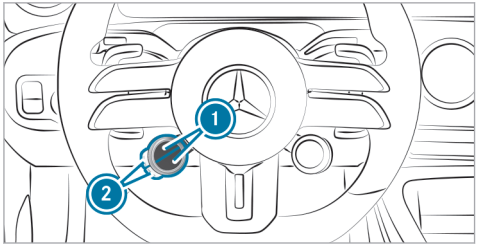

- Press upper or lower display button ① repeatedly, until it displays the symbol.

ⓘ If the display button does not show the symbol, then it is hidden. How functions are displayed and the order in which they are displayed can be set in the multimedia system (→ page 251).

- **To activate/deactivate:** press the corresponding button ②.

  The symbol indicates the currently selected transmission position:

  - M (red): manual gearshifting
  - D (blue): automatic transmission

Shifting up and down

! NOTE Damage to the engine due to shifting up too late

The automatic transmission does not shift up in manual mode even when the engine's limiting speed is reached.

The fuel supply is interrupted in order to prevent the engine from overrevving.

- Shift up before the engine speed reaches the red area in the rev counter.

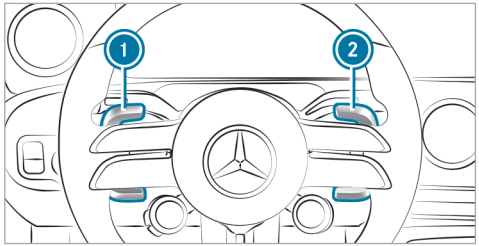

- **To shift up:** pull steering wheel gearshift paddle ②.

▶ **To shift down:** pull steering wheel gearshift paddle ①.

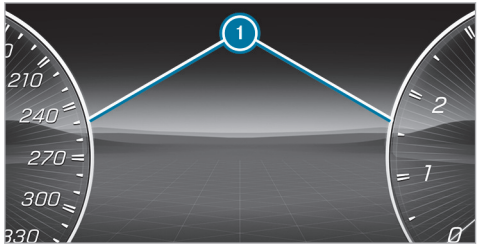

If the engine speed is too high or too low, you will not be able to change gear using the steering wheel gearshift paddles. In this case, segments ① will light up red on the driver display.

Permanently activating or deactivating manual shifting

Multimedia system:

→ ⌂ ▸▸ Settings ▸▸ Vehicle ▸▸ Driving

▶ Permanently activate or deactivate the function.

Gearshift recommendation

The gearshift recommendation assists you in adopting an economical driving style.

▶ If gearshift recommendation ① appears next to the transmission position display, shift to the recommended gear.

Using kickdown

▶ **Maximum acceleration:** depress the accelerator pedal beyond the point of resistance.

To protect against engine overrev, the automatic transmission will shift up to the next gear when maximum engine speed has been reached.

Glide mode function

With an anticipatory driving style, glide mode helps you to reduce fuel consumption.

Glide mode is characterised by the following:

- The combustion engine is disconnected from the drivetrain and continues to run in neutral.
- The transmission position display D is shown in green.
- **Vehicles with 48 V on-board electrical system:** the combustion engine is switched off depending on the driving situation. All of the vehicle functions remain active.

Glide mode is activated if the following conditions are met:

- Drive program E is selected.
- The speed is within a suitable range.

- The road's course is suitable, e.g. no steep uphill or downhill inclines or tight bends.
- There is no trailer coupled up to the trailer hitch, and no bicycle rack fitted.
- The state of charge of the battery is sufficient.
- You do not depress the accelerator or brake pedal (except for light brake applications).

ⓘ Glide mode can also be activated if you have selected the "Eco" setting for the drive in the drive program [I*].

Glide mode is deactivated again if one of the conditions is no longer met.

Vehicles with Active Distance Assist DISTRONIC: when Active Distance Assist DISTRONIC is active, the glide mode function is not available.

Glide mode can also be prevented by the following parameters:

- Incline
- Downhill gradient
- Temperature
- Altitude
- Speed
- Operating condition of the engine
- Traffic situation

ⓘ You can end glide mode by operating a steering wheel gearshift paddle (→ page 262).

Function of glide mode (Mercedes-AMG vehicles)

With an anticipatory driving style, Glide mode helps you to reduce fuel consumption.

When you drive in Glide mode, the [◢] symbol will appear on the driver's display and, depending on the model, the combustion engine will be switched off or disconnected from the powertrain. All of the vehicle functions remain active.

Glide mode will be activated if the following conditions are met:

- The ECO start/stop function is switched on.
- Drive program [I*] is selected with the drive setting "Moderate" or "Reduced".
- The speed is within a suitable range.
- The road's course is suitable, e.g. no steep uphill or downhill gradients or tight bends.
- The state of charge of the battery is sufficient.
- You are no longer depressing the accelerator or brake pedal.

Glide mode will be deactivated again if one of the conditions is no longer met.

Function of 4MATIC

4MATIC ensures that all four wheels are driven. Together with ESP® and 4ETS, 4MATIC improves the traction of your vehicle whenever a driven wheel spins due to insufficient traction.

If you fail to adapt your driving style, 4MATIC can neither reduce the risk of an accident nor override the laws of physics. 4MATIC cannot take account of road, weather and traffic conditions. 4MATIC is only an aid. You are responsible in particular for maintaining a safe distance from the vehicle in front, for vehicle speed, for braking in good time and for staying in lane.

ⓘ In wintry road conditions, the maximum effect of 4MATIC can be achieved only if you use winter tyres (M+S tyres), with snow chains if necessary.

Refuelling

Refuelling the vehicle

WARNING Risk of fire or explosion from fuel

Fuels are highly flammable.

- Fire, naked flames, smoking and creating sparks must be avoided.
- Before refuelling, switch off the vehicle and, if fitted, the stationary heater and keep switched off during filling.

WARNING Risk of injury from fuels

Fuels are poisonous and hazardous to your health.

- Do not swallow fuel or let it come into contact with skin, eyes or clothing.
- Do not inhale fuel vapour.
- Keep children away from fuel.
- Keep doors and windows closed during the refuelling process.

If you or other people come into contact with fuel, observe the following:

- Immediately rinse fuel off your skin with soap and water.
- If fuel comes into contact with your eyes, immediately rinse them thoroughly with clean water. Seek medical attention immediately.
- If you swallow fuel, seek medical attention immediately. Do not induce vomiting.
- Change immediately out of clothing that has come into contact with fuel.

WARNING Risk of fire and explosion due to electrostatic charge

Electrostatic charge can ignite fuel vapour.

- Before you open the fuel filler cap or take hold of the pump nozzle, touch the metallic vehicle body.
- To avoid creating another electrostatic charge, do not get into the vehicle again during the refuelling process.

WARNING Risk of fire from fuel mixture

Vehicles with a diesel engine:

If you mix diesel fuel with petrol, the flash point of the fuel mixture is lower than that of pure diesel fuel.

While the vehicle is running, component parts in the exhaust system may overheat without warning.

- Never refuel using petrol.
- Never mix petrol with diesel fuel.

NOTE Damage caused by the wrong fuel

Vehicles with a petrol engine:

Even small amounts of the wrong fuel could result in damage to the fuel system, the engine and the emission control system.

- Refuel only using unleaded, sulphur-free spark-ignition engine fuel that conforms

to European EN 228, or an equivalent specification.

Petrol can contain up to 25 %- of ethanol by volume.

▶ See the information label in the fuel filler flap for compatible fuels.

Further information about compatible fuels can be obtained at a qualified specialist workshop.

Throughout Europe, you can find compatibility markings on fuel pumps or pump nozzles suitable for your vehicle.

Never refuel with one of the following fuels:

- Diesel
- regular petrol with an octane number lower than 91 RON
- petrol with more than 3 % methanol by volume-, e. g. M15, M30
- petrol with metallic additives

If you have accidentally refuelled with the wrong fuel:

▶ Do not switch on the vehicle.
▶ Consult a qualified specialist workshop.

! NOTE Damage caused by the wrong fuel

Vehicles with a diesel engine:

Even small amounts of the wrong fuel could result in damage to the fuel system, the engine and the emission control system.

▶ Only refuel with sulphur-free diesel fuel. In countries without sulphur-free diesel fuel, only refuel with low-sulphur diesel fuel with a sulphur content below 50 ppm.

Never refuel with one of the following fuels:

- Petrol
- Marine diesel
- Heating oil
- Pure biodiesel or vegetable oil
- Petroleum or kerosene

If you have accidentally refuelled with the wrong fuel:

▶ Do not switch on the vehicle.
▶ Consult a qualified specialist workshop.

! NOTE Do not use diesel to refuel vehicles with a petrol engine

If you have accidentally refuelled with the wrong fuel:

- Do not switch on the vehicle. Otherwise fuel can enter the engine.

  Even small amounts of the wrong fuel could result in damage to the fuel system and the engine. The repair costs are high.

▶ Consult a qualified specialist workshop.
▶ Have the fuel tank and fuel lines drained completely.

NOTE Do not refuel diesel-engined vehicles with petrol

If you have accidentally refuelled with the wrong fuel:

- Do not switch on the vehicle. Otherwise fuel can enter the engine.

  Even small amounts of the wrong fuel could result in damage to the fuel system and the engine. The repair costs are high.

▶ Consult a qualified specialist workshop.

▶ Have the fuel tank and fuel lines drained completely.

NOTE Damage to the fuel system due to overfilling the fuel tank

▶ Only fill the fuel tank until the pump nozzle switches off.

If too much fuel has been added due, for example, to a faulty filling pump:

▶ Do not switch on the vehicle.

▶ Consult a qualified specialist workshop.

NOTE Fuel may spray out when you remove the fuel pump nozzle

▶ Only fill the fuel tank until the pump nozzle switches off.

Requirements

- The vehicle is unlocked.
- **Plug-in hybrid with petrol engine:** the fuel tank was bled before refuelling (→ page 269).

Observe the notes on service fluids and fuel.

The recommended octane number for your vehicle can be found on the information label in the fuel filler flap.

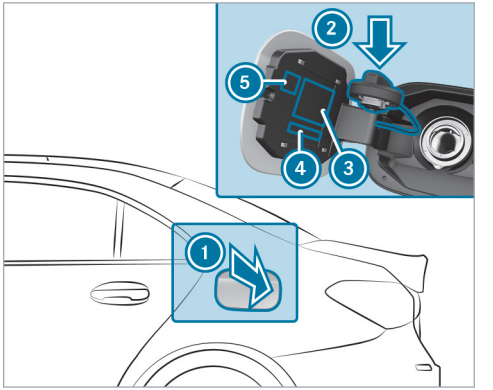

1. Fuel filler flap
2. Bracket for fuel cap
3. Tyre pressure table
4. Fuel type
5. QR code for rescue card

ⓘ **Plug-in hybrid with petrol engine:** the fuel filler flap opens automatically after bleeding the tank (→ page 269).

- Press on the back area of the fuel filler flap ①.
- Turn the fuel filler cap anti-clockwise and remove it.
- Insert fuel filler cap into bracket ② from above.
- Completely insert the pump nozzle into the tank filler neck, hook in place and refuel.
- Only fill the fuel tank until the pump nozzle switches off.

ⓘ **Vehicles with a diesel engine:** the tank filler neck is designed for refuelling at diesel filling pumps.
To prevent refuelling with the wrong fuel, your vehicle is equipped with a locking mechanism. This function may be deactivated in some countries owing to local circumstances. For more information, consult a Mercedes-Benz service centre.

ⓘ **Vehicles with a diesel engine:** do not run the tank dry.
If the fuel tank is completely empty, top up with at least 5 litres of diesel.

ⓘ **Vehicles with a diesel engine:** use a filler neck with a large diameter for vehicles with a diesel engine when topping up fuel from a fuel can. Otherwise, the filler neck cannot slide into the tank.
To prevent refuelling with the wrong fuel, your vehicle is equipped with a locking mechanism. This function may be deactivated in some countries owing to local circumstances. For more information, consult a Mercedes-Benz service centre.

- Replace the cap on the filler neck and turn clockwise until it engages audibly.
- Close fuel filler flap ①.

Depressurising the fuel tank (plug-in hybrid with petrol engine)

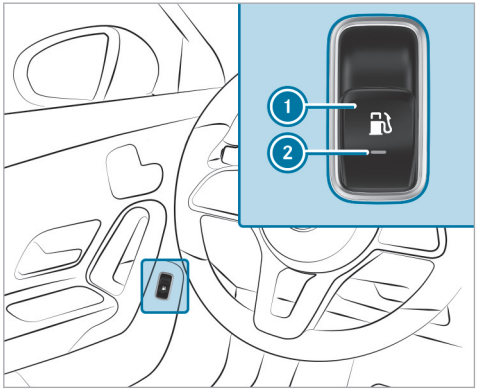

- Pull switch ① once briefly.
  Indicator lamp ② will flash and the Please wait Depressurising fuel tank message will appear on the driver's display.
  When the fuel tank is depressurised, indicator lamp ② will light up continuously.

The Fuel tank is depressurised Ready for refuelling message will appear on the driver's display and the fuel filler flap will open automatically.

ⓘ Depressurising the fuel tank may take several minutes.

The fuel tank can be depressurised only if the conditions described above are fulfilled. Otherwise, drive the vehicle at least 0.5 km and repeat the process.

ⓘ In the following situations, there is a malfunction:

- Indicator lamp ② flashes initially and then goes out.
- The yellow engine diagnostics warning lamp [⚙] lights up.

! NOTE Damage to the fuel filler flap when opening it

If an attempt is made to open a fuel filler flap that is not unlocked, the fuel filler flap or the opening mechanism may be damaged.

▶ Only refuel when the fuel filler flap has opened automatically.

You can watch an animation on this topic via the following link:

AdBlue® (vehicles with a diesel engine only)

Notes on topping up AdBlue®

AdBlue® is a water-soluble fluid for the NOx exhaust gas aftertreatment of diesel engines. In order for the exhaust gas aftertreatment to function properly, only use AdBlue® in accordance with ISO 22241.

AdBlue® is characterised by the following:

- non-toxic
- colourless and odourless
- non-flammable

If you open the AdBlue® tank, small amounts of ammonia vapour may be released. Only fill the AdBlue® tank in well-ventilated areas.

Do not let AdBlue® come into contact with skin, eyes or clothes. Keep AdBlue® away from children.

Do not ingest AdBlue®. If AdBlue® is swallowed, immediately rinse your mouth out thoroughly. Drink plenty of water. Seek medical attention at once.

Observe the notes on operating fluids (→ page 735).

AdBlue® is available here:

- AdBlue® can be topped up by fast service at a qualified specialist workshop, e.g. a Mercedes-Benz Service Centre.
- AdBlue® is available at many filling stations from AdBlue® filling pumps.
- Alternatively, AdBlue® is available at qualified specialist workshops, e.g. Mercedes-Benz Service Centres, and at many filling stations in AdBlue® refill canisters or AdBlue® refill bottles.

ⓘ Ensure the connection between the refill container and vehicle filler neck does not drip.

Refilling AdBlue®

! **NOTE** Engine damage due to AdBlue® being in the fuel

- ▶ AdBlue® must not be used to fill the fuel tank.
- ▶ Only use AdBlue® to fill the AdBlue® tank.
- ▶ Do not overfill the AdBlue® tank.

! **NOTE** Contamination of the vehicle interior due to AdBlue® leakage

- ▶ After topping up, carefully close the AdBlue® refill container.
- ▶ Avoid carrying AdBlue® refill containers permanently in the vehicle.

Requirements

- The vehicle is unlocked.

The following messages appear in order in the driver display when the AdBlue® tank requires refilling:

- Refill AdBlue See Owner's Manual. The AdBlue® level has fallen below the reserve range. Add at least 5 l of AdBlue®.
- Top up AdBlue Emergency op. in XXX km See Owner's Manual. The low AdBlue® level will lead to limited performance after the remaining distance displayed has been driven. Add at least 5 l of AdBlue®.
- Top up AdBlue XX,X l Emerg. op.: max. XXX km/h Start not poss. in XXX km. The low AdBlue® level will lead to limited performance from the speed displayed. After the remaining distance displayed has been covered, it will no longer be possible to start the vehicle. Top up at least the displayed quantity of AdBlue®.
- Top up XX,X l AdBlue Switch vehicle on, wait 60 sec. or engine start not possThe AdBlue® tank is empty. You can no longer start the vehicle. Top up at least the displayed quantity of AdBlue®. Switch on the vehicle and wait approx. 60 seconds. Start the vehicle.

You can see the AdBlue® range and level in the driver display Service.

ⓘ The AdBlue® range shown depends strongly on the driving style and operating conditions. The actual range can therefore deviate from the calculated range.

Opening the AdBlue® filler cap

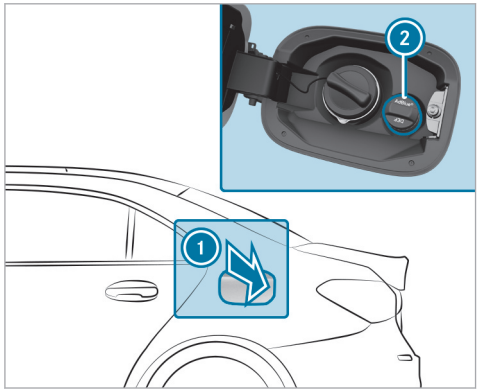

- Press on the centre of the back area of fuel filler flap 1.
- Turn AdBlue® filler cap 2 anti-clockwise and remove it.

ⓘ You can also place the AdBlue® filler cap in the filler cap holder in the hinge arm of the fuel filler flap.

Refilling AdBlue®

Mercedes-Benz recommends that you top up AdBlue® at a pump. If no AdBlue® pump is available, you can also top up AdBlue® with a canister.

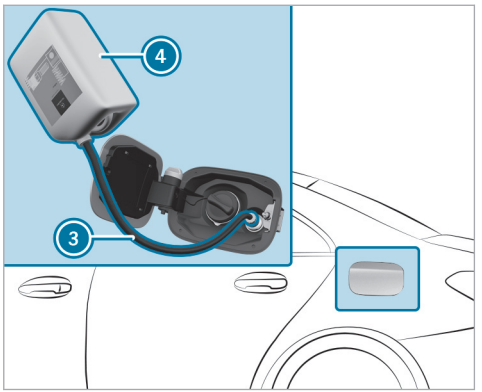

- Screw on the fastener of AdBlue® refill canister 4.
- Screw disposable hose 3 onto the opening of AdBlue® refill canister 4 until hand-tight.
- Screw disposable hose 3 onto the filler neck of the vehicle until hand-tight.
- Lift up and tip AdBlue® refill canister 4.
  The filling process stops when the AdBlue® container is completely full.
  AdBlue® refill canister 4 can be removed when it has been only partially emptied.
- Unscrew and close disposable hose 3 and AdBlue® refill canister 4 in reverse order.
- Replace the AdBlue filler cap® 2 and turn it clockwise until it audibly engages.
- Close fuel filler flap 1.
- Switch on the vehicle for at least 60 seconds.

ⓘ If it was no longer possible to start the vehicle due to the empty AdBlue® tank, it takes up to 60 seconds for topping up to be detected.

- Start the vehicle.

ⓘ Avoid storing AdBlue® refill containers permanently in the vehicle.

Charging the high-voltage battery (plug-in hybrid)

Notes on charging the high-voltage battery

⚠ **DANGER** Risk of fatal injuries in case of improper handling of the Flexible Charging System Pro

If you use the Flexible Charing System Pro improperly, this may result e.g. in fires or an electric shock.

▶ Observe the notes in the Owner's Manual for the Flexible Charging Systems Pro. Otherwise risks may not be detected.

! **NOTE** High-voltage battery damage due to leaving the vehicle idle for lengthy periods of time

Lithium-ion batteries experience a natural self-discharge.

Exhaustive discharging can therefore occur if the vehicle is idle for several months. This can damage the high-voltage battery.

▶ To avoid damage, please observe the following recommendations when handling the high-voltage battery.

! **NOTE** Accelerated ageing of the high-voltage battery due to not observing the following recommendations

As a result of its basic characteristics, the storage capacity of and the amount of energy available from the high-voltage battery decreases over the course of its life. Due to this, both the maximum electrical range that can be achieved by the vehicle and its maximum electrical output can be impaired.

The following factors could accelerate the ageing of the high-voltage battery:

- a high level of charge, especially if the vehicle is idle for a lengthy period of time
- frequent rapid charging with direct current (mode 4)
- leaving the vehicle idle for lengthy periods at high ambient temperatures

▶ To avoid accelerated ageing, please observe the following recommendations when handling the high-voltage battery.

! **NOTE** Damage to the drive system when charging the high-voltage battery at extreme altitudes

The drive system may be damaged if the high-voltage battery is charged at elevations greater than 4,000 m above sea level.

It may then no longer be possible to continue the journey.

▶ Avoid charging processes at extreme altitudes.

Recommendations when handling the high-voltage battery:

- Rapid-charge the high-voltage battery with direct current (Mode 4) only when required.
- In case of longer downtimes, switch off the vehicle with a charge status of the high-voltage battery between 25 % and 30 %. Do not

permanently connect the high-voltage battery to a power supply.

- If leaving the vehicle idle for lengthy periods, avoid high outside temperatures wherever possible.
- Every six weeks check the charge level of the high-voltage battery (→ page 290).
- Make sure to charge the high-voltage battery if the charge level is below 15 %.
- Do not disconnect the 12 V battery even if the vehicle is left unused for a lengthy period. Otherwise the condition of the vehicle's high-voltage battery cannot be monitored.
- When only using the high-voltage battery with low states of charge, fully charge the high-voltage battery twice a year.

Depending on the charging version, your vehicle is equipped with one of the following vehicle sockets:

- Type 2 for charging with alternating current (mode 2/3)
- Type Combo 2 for charging with alternating current (mode 2/3) and charging with direct current (mode 4)

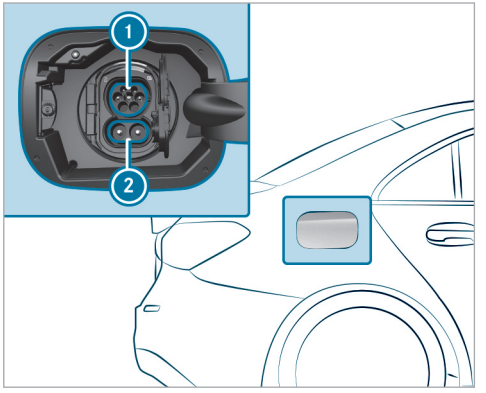

Example: type Combo 2 vehicle socket

1 AC charging port type 2

2 Socket extension for DC charging

ⓘ When using a CCS charging cable (Combined Charging System) for charging with direct current at a vehicle socket type Combo, both ports on the vehicle socket 1 and 2 are used for charging.

Charging options for the high-voltage battery (mode 2, 3 or 4):

- While the vehicle is in motion by means of recuperation
- Stationary alternating current charging:
  - At a mains socket (mode 2)
  - at a wallbox or charging station (mode 3)
- Stationary DC charging (vehicles with vehicle socket type Combo 2):
  - At a rapid-charging station (mode 4)

Depending on the country-specific vehicle equipment and your vehicle's charging cable, single phase AC charging is also possible.

Observe the different grid requirements of your current location when charging. Only use charging cables which conform to the grid requirements. Consult a qualified electrician or your local grid operator if you have any questions.

It is recommended that you charge the high-voltage battery at a wallbox or charging station due to the improved charging performance and better charging efficiency offered.

System limits

The power output of the high-voltage battery may be impaired by the following:

- high or low outside temperatures
- Electrical auxiliary consumers in the vehicle being switched on, e.g. operating the air conditioning system
- extended periods without charging

The charging time or the charging power of the high-voltage battery may be increased by the following:

- high or low outside temperatures
- A low or high charge status of the high-voltage battery
- The maximum available charge current of the charging device

Stowing the charging cable

Always stow the vehicle's charging cable in the charging cable bag provided, and secure the charging cable bag in the boot or load compartment with the included retaining strap. Otherwise, the charging cable bag with the charging cable is not sufficiently secured.

Example: charging cable bag in the boot/load compartment

As delivered, charging cable bag ① with retaining strap ② is located in the boot or load compartment. To secure the charging cable bag, the retaining strap must be attached to tie-down eye ③. Do not use bag hooks to attach the retaining strap.

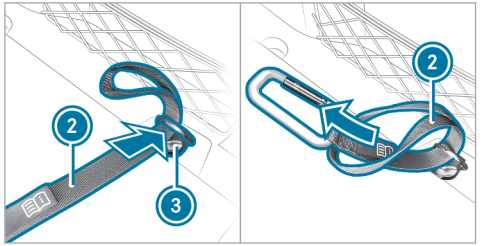

- Feed the loop end of retaining strap ② through tie-down eye ③ in the boot or load compartment.
- Feed the end with the snap hook through the loop of retaining strap ②.

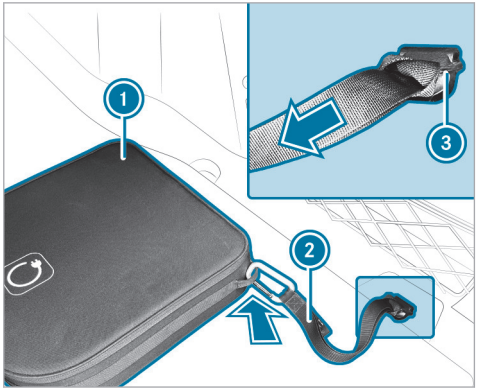

- Tighten retaining strap ② so that the knot around tie-down eye ③ is tight and secure.
- Hook the snap hook of retaining strap ② in a tie-down eye of charging cable bag ①.

Notes on charging the high-voltage battery at a mains socket (Mode 2)

DANGER Risk of fatal injuries in case of improper handling of the Flexible Charging System Pro

If you use the Flexible Charing System Pro improperly, this may result e.g. in fires or an electric shock.

- Observe the notes in the Owner's Manual for the Flexible Charging Systems Pro. Otherwise risks may not be detected.

DANGER Risk of fatal injury from incorrectly installed component parts

Connecting the charging cable to a mains socket using incorrectly installed component parts could cause a fire or an electric shock, for example.

- Only connect the charging cable to a mains socket that:

- Has been properly installed and
- Has been inspected by a qualified electrician

▶ For safety reasons, only use the charging cable supplied with the vehicle or an original Mercedes-Benz charging cable.

▶ Purchase these parts at a Mercedes-Benz Service Centre and obtain advice there.

Mercedes-Benz thoroughly tests these original charging cables for their suitability for high-voltage charging of your vehicle.

▶ Never use a damaged charging cable.

▶ Do not use:

- Extension cables
- Extension reels
- Multiple sockets

▶ Never use socket adapters to connect the charging cable to the mains socket. The only exception being if the adapter has been tested and approved by the manufacturer for charging the high-voltage battery of an electric vehicle.

▶ Observe the safety notes in the operating instructions for the socket adapter.

Only the following charging cables may be used:

- The charging cable supplied with the vehicle.
- A charging cable that has been approved for the vehicle.

The charging process can vary depending on the power supply equipment. The charging times when charging the high-voltage battery at the mains socket are considerably longer than when charging at a wallbox or charging station.

When doing so, always observe the local information.

Do not leave the charging cable controls hanging loose from a mains socket.

Do not lift the controls by the following component parts:

- the charging cable connector
- the mains plug

When charging, protect the charging cable control element from excessive heat such as direct sunlight. Otherwise the charging process may be aborted.

Notes on charging the high-voltage battery at a wallbox or charging station (mode 3)

⚠ **DANGER** Risk of fatal injury from incorrectly installed component parts

Connecting the charging cable to a wallbox using incorrectly installed component parts could cause a fire or an electric shock, for example.

▶ Only connect the charging cable to a wallbox that:

- Has been properly installed and
- Has been inspected by a qualified electrician

▶ For safety reasons, only use charging cables that have been tested and approved by the manufacturer for charg-

ing the high-voltage battery in an electric vehicle.
- ▶ Never use damaged charging cables.
- ▶ Do not extend the charging cable.
- ▶ Do not use adapters.
- ▶ Observe the safety notes in the operating instructions for the wallbox.

If charging at a wallbox without pre-installed cable, use the optionally available charging cable for wallbox and charging station (mode 3). The charging cable is stowed in a bag in the boot/luggage compartment.

Only use charging cables that have been tested and approved by the manufacturer for charging the high-voltage battery in an electric vehicle.

DANGER Risk of fatal injury due to damaged components

Connecting the vehicle to a charging station using damaged component parts could cause a fire or an electric shock, for example.

- ▶ Perform a visual check of the charging station for obvious defects, for example damage to the housing or charging cable connection.
- ▶ Never use damaged charging cables.
- ▶ Do not use an extension for the charging cable.
- ▶ Do not use adapters.
- ▶ Always observe the safety instructions on the charging station.

Most charging stations must be activated before the charging process, e.g. using an RFID card or via Plug-and-Charge. Observe the on-site operator's instructions for the charging station and the notes on Mercedes me Charge (→ page 460).

The amount of energy dispensed for the charging process, shown by the charging station, may be higher than the amount of energy actually absorbed by the high-voltage battery. This is the result of different levels of charging losses and is described as recharge efficiency. Charging losses occur, for example, due to heat that builds up when the vehicle is charging or from auxiliary consumers that are switched on. Further information on recharge efficiency can be obtained at a qualified specialist workshop.

Notes on charging the high-voltage battery at a rapid charging station (mode 4)

DANGER Risk of fatal injury due to damaged components

Connecting the vehicle to a charging station using damaged component parts could cause a fire or an electric shock, for example.

- ▶ Perform a visual check of the charging station for obvious defects, for example damage to the housing or charging cable connection.
- ▶ Never use damaged charging cables.
- ▶ Do not use an extension for the charging cable.
- ▶ Do not use adapters.
- ▶ Always observe the safety instructions on the charging station.

DANGER Risk of fatal injuries when carrying out maintenance work during the charging process

During the charging process, the high-voltage on-board electrical system is under high voltage.

- Do not perform any maintenance work during the charging process.

Most charging stations must be activated before the charging process, e.g. using an RFID card or via Plug-and-Charge. Observe the on-site operator's instructions for the charging station and the notes on Mercedes me Charge (→ page 460).

The charging cable for the vehicle must not be longer than 30 m due to the legal requirements in some countries. This is to prevent the interference of signals being received by radio communication devices in the vehicle or in close proximity to the charging station. Be aware that parts of the charging cable may be routed underground. If in doubt, ask the charging station operator if this is the case before charging the high-voltage battery.

The amount of energy dispensed for the charging process, shown by the charging station, may be higher than the amount of energy actually absorbed by the high-voltage battery. This is the result of different levels of charging losses and is described as recharge efficiency. Charging losses occur, for example, due to heat that builds up when the vehicle is charging or from auxiliary consumers that are switched on. Further information on recharge efficiency can be obtained at a qualified specialist workshop.

Maximum permissible charging current for charging at a mains socket

DANGER Risk of fatal injuries in case of improper handling of the Flexible Charging System Pro

If you use the Flexible Charing System Pro improperly, this may result e.g. in fires or an electric shock.

- Observe the notes in the Owner's Manual for the Flexible Charging Systems Pro. Otherwise risks may not be detected.

NOTE Overloading the mains socket due to excessive charging current

If the charging current is too high, the fuse could be tripped or the external mains supply could overheat.

- Ensure that the external mains supply has been designed to handle the charging current provided.
- For safety reasons, only use the charging cable supplied with the vehicle or an original Mercedes-Benz charging cable. Mercedes-Benz thoroughly tests these original charging cables for their suitability for high-voltage charging of your vehicle.
- Purchase these parts at a Mercedes-Benz Service Centre and obtain advice there.

▶ Check the maximum charging current using the charging capacity shown in the driver's display.

The charging cable supplied is set to a country-specific maximum charging current value. When charging abroad, the maximum value may exceed the permitted value for that country.

If you use the Mercedes-Benz Flexible Charging System Pro, the maximum charge current can be set country-specifically (see Owner's Manual for the charging system).

▶ Before charging at a mains socket, have the maximum permissible charging current for the relevant mains socket or the building checked by a qualified electrician.

▶ When abroad, observe the country-specific laws when charging.

If you have questions concerning the charging current or if there is a malfunction, please contact a qualified specialist workshop.

Overview of the charging cable control panel

⚠ **DANGER** Risk of fatal injuries in case of improper handling of the Flexible Charging System Pro

If you use the Flexible Charing System Pro improperly, this may result e.g. in fires or an electric shock.

▶ Observe the notes in the Owner's Manual for the Flexible Charging Systems Pro. Otherwise risks may not be detected.

The charging cable control panel of the standard charging cable described below shows the current status of the charging process.

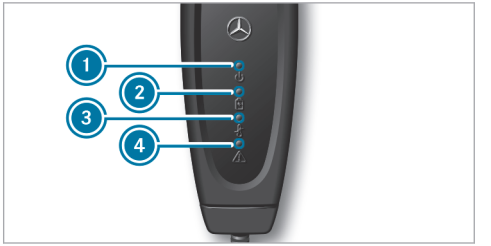

① Supply voltage indicator
② Charging process indicator
③ Temperature monitor indicator
④ Safety system indicator

Supply voltage indicator ①

Display	Meaning
Lights up white	The supply voltage is connected.

Charging process indicator 2

Display	Meaning
Flashes green	The high-voltage battery is charging.

Temperature control indicator 3

Display	Meaning
Lights up red	The green LED flashes simultaneously: overtemperature – the charging performance is reduced. The green LED does not flash: overtemperature – the charging process is stopped.
Flashes red	Overtemperature at the mains plug – the charging process is stopped.

Safety system indicator 4

Display	Meaning
Flashes red	Charging cable malfunction – cannot carry out the charging process, reset the charging cable control panel.
Lights up red	White LED is off: power supply malfunction – cannot carry out the charging process, replace the mains socket. White LED is on: vehicle malfunction – cannot carry out the charging process, reset the charging cable control panel.

When all four displays light up, the charging cable control panel is performing a self-test.

If the temperature monitor 3 indicates a malfunction, it may help to protect the charging cable from direct sunlight.

To reset the charging cable control panel: if safety system 4 indicates a charging cable malfunction or a vehicle malfunction, first reset the charging cable operating unit. To do this, disconnect the charging cable from the vehicle and from the mains socket and wait for approximately five seconds. If the malfunction persists after the charging cable is reconnected, charging at the mains socket is not possible. The charging cable must be replaced or the vehicle plug must be checked at a qualified specialist workshop, depending on the indicator.

Functions of the indicator lamps on the vehicle socket

The socket flap is centrally locked and unlocked together with the vehicle.

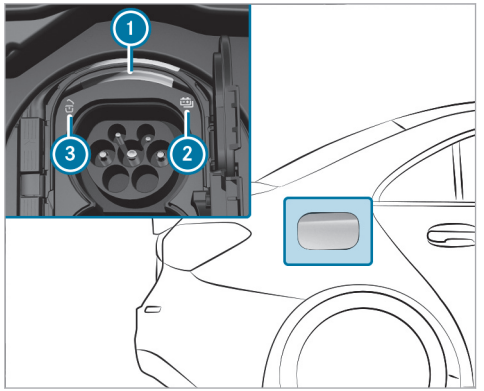

Example: Combo 2 vehicle socket

1. Socket lamp
2. Charging process indicator lamp
3. Locking status indicator lamp

Socket lamp 1 flashes or lights up as with indicator lamps 2 and 3.

Overview of the locking status

Locking status 3	Display	Meaning
	Lights up white	Vehicle socket unlocked, insert or remove charging cable
	Flashes white	Malfunction during locking or unlocking

Overview of the charging process status

Status of the charging process 2	Display	Meaning
	Flashes orange	Connection is being established
	Flashes green	Active energy flow
	Lights up orange (for approx. 60 s)	Interruption in charging
	Lights up green (for approx. 60 s)	Charging process completed
	Flashes red (for approx. 90 s)	Vehicle malfunction; charging is not possible

Starting the alternating current charging process (mode 2/3)

⚠ **DANGER** Risk of fatal injuries in case of improper handling of the Flexible Charging System Pro

If you use the Flexible Charing System Pro improperly, this may result e.g. in fires or an electric shock.

▶ Observe the notes in the Owner's Manual for the Flexible Charging Systems Pro. Otherwise risks may not be detected.

⚠ **DANGER** Risk of death when charging at a damaged socket

The charging process uses high voltage.

If the charging cable, the vehicle socket or the mains socket are damaged, you could receive an electric shock.

▶ Only use an undamaged charging cable.

▶ Avoid mechanical damage such as crushing, abrading or driving over the cable.

▶ Have a damaged vehicle socket replaced at a qualified specialist workshop as soon as possible.

▶ Never connect the charging cable to a damaged vehicle socket.

! **NOTE** Damage due to overheating of charging cable and charge port

During the charging process, the charging cable and charge port can heat up within the permissible limits.

The permissible limit values are influenced by the following factors:

- the power supply system and the charging cable are not damaged
- the instructions for handling the charging cable and the control element on the charging cable have been observed

▶ If the charging cable or charge port becomes too hot, have the power supply system checked.

! **NOTE** Damaged or dirty vehicle socket when the socket flap is open

▶ Always keep the socket cover and the socket flap closed when there is no charging cable connected. This protects the vehicle socket from dirt and damage.

▶ Make sure that the socket cover is closed properly before closing the socket flap. This can otherwise result in damage which may prevent the socket flap from being opened again.

! **NOTE** Damage to the vehicle socket or the charging cable connector due to incorrect handling

Do not use excessive force (maximum 300 N) to fully insert the charging cable connector into the vehicle socket. You may otherwise

damage the vehicle socket, the charging cable connector or their contacts.

▶ If you feel there is increased resistance, pull the charging cable connector out of the socket and reinsert it.

Requirements

- The transmission is in position P.
- The vehicle is unlocked or the vehicle is locked and the distance between the key and the vehicle does not exceed 1 m.
- The charging cable is not taut.

Depending on the charging version, your vehicle is equipped with one of the following vehicle sockets:

- Type 2 for charging with alternating current (mode 2/3)
- Type Combo 2 for charging with alternating current (mode 2/3) and charging with direct current (mode 4)

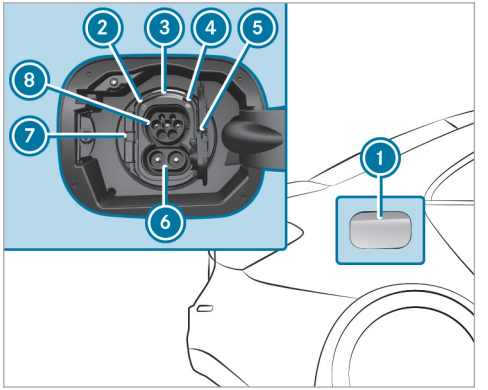

Combo 2 vehicle socket (example)

▶ Press the centre on the rear area of the socket flap 1 and swivel the socket flap to the front.
The indicator lamp 2 and status display 3 light up white.

▶ Press catch 7 to the left and fold open socket cover 5.

ⓘ On vehicles with a Combo vehicle socket, only the connection 8 is required for the charging cable connector. Only open the upper part of the socket cap 5.

▶ For charging at a mains socket insert the mains plug into the mains socket of the external power source to the stop.

▶ **Flexible Charging System Pro:** if necessary, switch off protective earth detection and set maximum charge current (see operating instructions of the charging system).

▶ Fully insert the charging cable connector into vehicle socket 8. If the wallbox/charging station is not equipped with a charging cable, fully insert the plug of the vehicle's charging cable into the wallbox/charging station socket.
Make sure that the charging cable is not taut when inserted.
The indicator lamp 4 and status display 3 flash orange and, as soon as the high-voltage battery is charged, green.

When the charging cable is connected to the vehicle, the vehicle cannot be started or moved.

At the start of the charging process, the charge level display is shown in the driver display with a charging prediction. The charging prediction is the point in time at which the high-voltage battery will be fully charged.

ⓘ Depending on the temperature, the fan and battery cooling system may audibly switch on during the charging process.

ⓘ If the vehicle is idle for lengthy periods and connected to the mains supply, the high-voltage battery will be recharged automatically as needed or when electrical consumers are activated (e.g. the pre-entry climate control).

ⓘ The vehicle is equipped with a fuse against overvoltages in the mains supply. This fuse can respond e.g. in severe storms and result in triggering of the building fuse and charging interruption. These functions serve to protect the vehicle.
After switching the building fuse back on again the charging process is automatically continued. During a charge interruption without triggering the building fuse it may take up to ten minutes for the charging process to continue automatically.

Ending the alternating current charging process (Mode 2/3)

⚠ **DANGER** Risk of death when charging at a damaged socket

The charging process uses high voltage.

If the charging cable, the vehicle socket or the mains socket are damaged, you could receive an electric shock.

- ▶ Only use an undamaged charging cable.
- ▶ Avoid mechanical damage such as crushing, abrading or driving over the cable.
- ▶ Have a damaged vehicle socket replaced at a qualified specialist workshop as soon as possible.
- ▶ Never connect the charging cable to a damaged vehicle socket.

! **NOTE** Damage due to overheating of charging cable and charge port

During the charging process, the charging cable and charge port can heat up within the permissible limits.

The permissible limit values are influenced by the following factors:

- the power supply system and the charging cable are not damaged
- the instructions for handling the charging cable and the control element on the charging cable have been observed

- ▶ If the charging cable or charge port becomes too hot, have the power supply system checked.

! **NOTE** Damaged or dirty vehicle socket when the socket flap is open

- ▶ Always keep the socket cover and the socket flap closed when there is no

charging cable connected. This protects the vehicle socket from dirt and damage.

▶ Make sure that the socket cover is closed properly before closing the socket flap. This can otherwise result in damage which may prevent the socket flap from being opened again.

Requirements

- The vehicle is unlocked, or the vehicle is locked and the distance between the key and the vehicle does not exceed 1 m.

Depending on the charging version, your vehicle is equipped with one of the following vehicle sockets:

- Type 2 for AC charging (Mode 2/3)
- Type Combo 2 for AC charging (Mode 2/3) and DC charging (Mode 4)

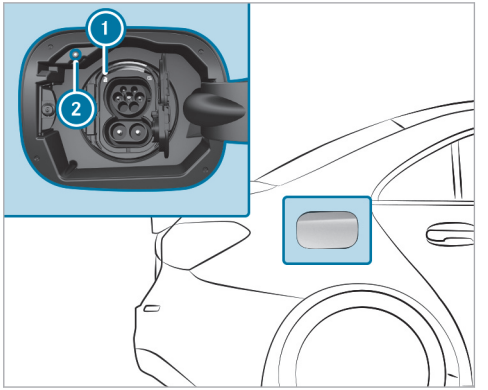

Type Combo 2 vehicle socket (example)

ⓘ Vehicles only equipped with a Type 2 vehicle socket for AC charging have no charging interruption button ②.

▶ **Type Combo 2 vehicle socket:** press the charging interruption button ②.
The charging process is ended. The [🔓] indicator lamp ① lights up white. The vehicle socket is unlocked.

ⓘ As an alternative, and only if the charging interruption button ② is not working, you can unlock the vehicle with the vehicle key or centrally from inside to end the charging process. If the indicator lamp then [🔓] ① lights up white, the vehicle socket is unlocked for around 30 seconds.

▶ **Type 2 vehicle socket:** unlock the vehicle with the vehicle key or centrally from inside.
The charging process is ended. The [🔓] indicator lamp ① lights up white. The vehicle socket is unlocked for around 30 seconds.

ⓘ If you cannot remove the charging cable connector, repeat the unlocking procedure. If the charging cable connector is still locked, contact a qualified specialist workshop.

▶ Close the socket cover and the socket flap.

▶ Remove the charging cable connector from the mains socket, or from the socket on the wallbox/charging station, and stow the vehicle's charging cable safely in the vehicle (→ page 275).

ⓘ After the charging cable connector has been disconnected, the indicator lamp [🔓] ⓘ on the vehicle socket remains lit for some time before switching off.

Starting the direct current charging process (mode 4)

⚠ **DANGER** Risk of death when charging at a damaged socket

The charging process uses high voltage.

If the charging cable, the vehicle socket or the mains socket are damaged, you could receive an electric shock.

▶ Only use an undamaged charging cable.

▶ Avoid mechanical damage such as crushing, abrading or driving over the cable.

▶ Have a damaged vehicle socket replaced at a qualified specialist workshop as soon as possible.

▶ Never connect the charging cable to a damaged vehicle socket.

! **NOTE** Damage due to overheating of charging cable and charge port

During the charging process, the charging cable and charge port can heat up within the permissible limits.

The permissible limit values are influenced by the following factors:

- the power supply system and the charging cable are not damaged
- the instructions for handling the charging cable and the control element on the charging cable have been observed

▶ If the charging cable or charge port becomes too hot, have the power supply system checked.

! **NOTE** Damaged or dirty vehicle socket when the socket flap is open

▶ Always keep the socket cover and the socket flap closed when there is no charging cable connected. This protects the vehicle socket from dirt and damage.

▶ Make sure that the socket cover is closed properly before closing the socket flap. This can otherwise result in damage which may prevent the socket flap from being opened again.

! **NOTE** Damage to the vehicle socket or the charging cable connector due to incorrect handling

Do not use excessive force (maximum 300 N) to fully insert the charging cable connector into the vehicle socket. You may otherwise damage the vehicle socket, the charging cable connector or their contacts.

▶ If you feel there is increased resistance, pull the charging cable connector out of the socket and reinsert it.

Requirements

- The transmission is in position P.
- The vehicle is unlocked, or the vehicle is locked and the distance between the key and the vehicle does not exceed 1 m.
- The charging cable is not taut.

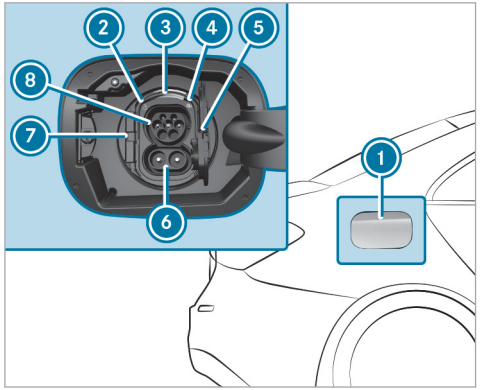

▶ Press the rear centre of the socket flap ① and flip the socket flap forwards.
The indicator lamp ② and status display ③ light up white.

▶ Press catch ⑦ to the left and fold open socket cover ⑤.

ⓘ A CCS charging cable plug requires connections ⑥ and ⑧. Accordingly you should open both sections of the socket cover ⑤.

▶ Fully insert the CCS charging cable connector into the vehicle socket.
Make sure that the charging cable is not taut when inserted.

The indicator lamp ④ and status display ③ flash orange and, as soon as the high-voltage battery is charged, green.

When the charging cable is connected to the vehicle, the vehicle cannot be started or moved.

At the start of the charging process, the charge status is shown in the driver display with a completion time. The completion time either refers to the predicted charge level at the set departure time, or the time at which the high-voltage battery will be fully charged.

ⓘ Depending on the temperature, the fan and battery cooling system may audibly switch on during the charging process.

ⓘ If the vehicle is idle for lengthy periods and connected to the mains supply, the high-voltage battery will be recharged automatically as needed or when electrical consumers are activated (e.g. the pre-entry climate control).

Ending the direct current charging process (mode 4)

⚠ **DANGER** Risk of death when charging at a damaged socket

The charging process uses high voltage.

If the charging cable, the vehicle socket or the mains socket are damaged, you could receive an electric shock.

▶ Only use an undamaged charging cable.

- Avoid mechanical damage such as crushing, abrading or driving over the cable.
- Have a damaged vehicle socket replaced at a qualified specialist workshop as soon as possible.
- Never connect the charging cable to a damaged vehicle socket.

! NOTE Damage due to overheating of charging cable and charge port

During the charging process, the charging cable and charge port can heat up within the permissible limits.

The permissible limit values are influenced by the following factors:

- the power supply system and the charging cable are not damaged
- the instructions for handling the charging cable and the control element on the charging cable have been observed

- If the charging cable or charge port becomes too hot, have the power supply system checked.

! NOTE Damaged or dirty vehicle socket when the socket flap is open

- Always keep the socket cover and the socket flap closed when there is no charging cable connected. This protects the vehicle socket from dirt and damage.
- Make sure that the socket cover is closed properly before closing the socket flap. This can otherwise result in damage which may prevent the socket flap from being opened again.

Requirements

- The vehicle is unlocked, or the vehicle is locked and the distance between the key and the vehicle does not exceed 1 m.

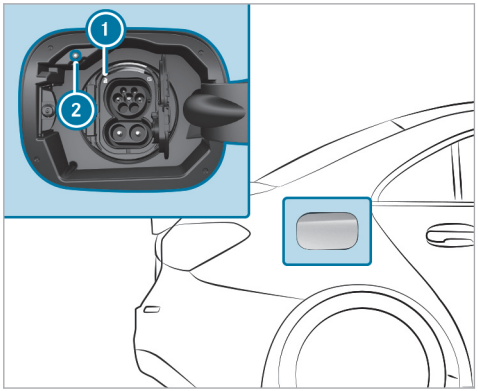

- Press charging interruption button 2. The charging process is ended. The [ ] indicator lamp 1 lights up white. The vehicle socket is unlocked.

ⓘ As an alternative, and only if the charging interruption button ② is not working, you can unlock the vehicle with the vehicle key or centrally from inside to end the charging process. If the indicator lamp then [🔓] ① lights up white, the vehicle socket is unlocked for around 30 seconds.

▶ Remove the charging cable connector from the vehicle socket.

ⓘ If you cannot remove the charging cable connector, unlock the vehicle again and repeat the unlocking procedure. If the charging cable connector is still locked, contact a qualified specialist workshop.

▶ Close the socket cover and the socket flap.

ⓘ After the charging cable connector has been disconnected, the left [🔓] indicator lamp ① on the vehicle socket remains lit for some time before switching off.

Function of the charge level display in the driver's display

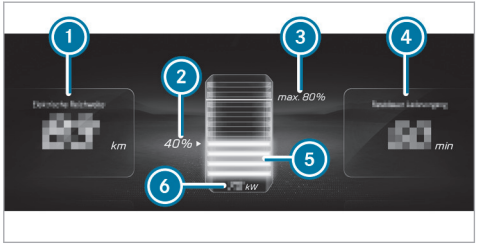

① Range at current charge level
② Current charge level of the high-voltage battery
③ Maximum charge level (depending on the setting)
④ Time remaining until completely charged (until the selected maximum charge level is reached)
⑤ Dynamic charge level display
⑥ Current charging capacity

ⓘ Specified remaining range ① may vary due to different factors, e.g. driving style or topography.

When the vehicle is connected to the mains supply and is switched off, the driver's display shows the charge level display for approximately two minutes.

ⓘ The value of current charging capacity ⑥ can differ from the display on the charging station.

Parking

Parking the vehicle

⚠ **WARNING** Risk of accident and injury caused by an insufficiently secured vehicle rolling away

If the vehicle is not securely parked sufficiently, it can roll away in an uncontrolled way even at a slight downhill gradient.

▶ On uphill or downhill gradients, turn the front wheels so that the vehicle rolls towards the kerb if it starts moving.

- apply the parking brake.
- Switch the transmission to position P.

WARNING Risk of fire caused by hot exhaust system parts

Flammable materials such as leaves, grass or twigs may ignite.

- Park the vehicle so that no flammable material can come into contact with hot vehicle components.
- In particular, do not park on dry grassland or harvested grain fields.

WARNING Accident– and risk of injury with unsupervised children in the vehicle

If you leave children unattended in the vehicle, they can in particular

- Open doors and thereby endanger other persons or road users.
- get out of the car and are hit by traffic.
- Operate vehicle equipment and become trapped, forexample.

In addition, the children could also set the vehicle in motion, for exampleby:

- releasing the parking brake.
- change the gearbox setting.
- start the vehicle.

- Never leave children unattended in the vehicle.
- When leaving the vehicle, always take the SmartKey with you and lock the vehicle.
- Keep the key out of reach of children.

NOTE Damage to the vehicle due to it rolling away

- Always secure the vehicle against rolling away.

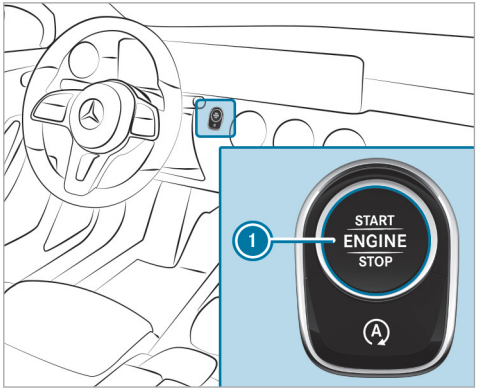

- Bring the vehicle to a standstill by depressing the brake pedal.
- On uphill or downhill gradients, turn the front wheels so that the vehicle will roll towards the kerb if it starts moving.
- Apply the electric parking brake.

- ▶ Engage transmission position P in a stationary vehicle with the brake pedal applied (→ page 259).
- ▶ Switch off the vehicle by pressing button ①.
- ▶ Release the service brake slowly.
- ▶ Get out of the vehicle and lock it.

ⓘ When you park the vehicle, you can still operate the side windows and the panoramic sliding sunroof for approximately four minutes if the driver's door is closed.

Automatic vehicle shut-off upon locking

Your vehicle is equipped with automatic engine shut-off.

When you leave the vehicle ready to drive, the vehicle will be turned off when locked under the following conditions:

- The ignition is switched on or the engine is running.
- Transmission position P is engaged.
- The driver's door is closed.
- **In addition, one of the following conditions must be fulfilled:**
  - The vehicle is locked using the vehicle key.
  - **Vehicles with KEYLESS-GO:** the vehicle is locked via KEYLESS-GO on the door handle of a closed door.
  - **Vehicles with KEYLESS-GO:** the vehicle is locked via the locking button on the boot lid.

ⓘ The engine will continue to run if the vehicle is not locked as described after you have left it. In this case, switch off the vehicle manually.

Automatic vehicle shut-off after a period of time (equipment-dependent)

When the engine is running, the following display message will appear on the driver's display when you leave the vehicle or after a certain holding time in transmission position P : Vehicle is ready to drive Shutdown occurs when locked or automatically in XX mins

The vehicle will then switch off automatically after a total holding time of 20 minutes.

ⓘ To avoid automatic shut-off after a period of time, acknowledge the corresponding message on the central display of the multimedia system.

The engine will continue to run in the following cases:

- If the vehicle is not locked as described after you have left it
- If automatic shut-off is not indicated by the display message
- If automatic shut-off after a period of time has been deactivated via the corresponding message on the central display

In this case, switch off the vehicle manually.

Garage door opener

Programming buttons for the garage door opener

⚠ **DANGER** Risk of fatal injuries due to exhaust gases

Combustion engines emit poisonous exhaust gases such as carbon monoxide. Breathing in

these exhaust gases is hazardous to health and results in poisoning.

▶ Never leave the engine and, if present, the stationary heater, running in an enclosed space without sufficient ventilation.

⚠ **WARNING** Risk of injury by becoming trapped when opening and closing a garage door

When you operate or program a garage door with an integrated garage door opener, persons can become trapped or struck by the garage door if they stand within its range of movement.

▶ Always make sure that nobody is within the range of the garage door's movement.

Before programming the garage door opener, park the vehicle outside the garage. Make sure that the vehicle is switched on but not started.

Requirements

- The vehicle has been parked outside the garage or outside the range of movement of the door.
- The vehicle is switched on.
- The vehicle has not been started.

ⓘ The garage door opener function is always available when the vehicle is switched on.

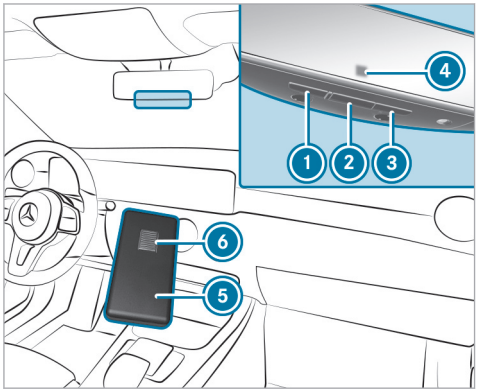

F177 0066 02

▶ Press and hold button ①, ② or ③ that you wish to program.
Indicator lamp ④ flashes yellow.

ⓘ It can take up to 20 seconds before the indicator lamp flashes yellow.

▶ Release the previously pressed button.
Indicator lamp ④ continues to flash yellow.

▶ Point remote control ⑤ from a distance of 1 cm to 8 cm towards button ①, ② or ③.

▶ Press and hold button ⑥ of remote control ⑤ until one of the following signals appears:
- Indicator lamp ④ lights up green continuously. Programming is complete.
- Indicator lamp ④ flashes green. Programming was successful. Additionally, synchronisation of the rolling code with the door system must be carried out.

▶ If indicator lamp ④ does not light up or flash green: repeat the procedure.

▶ Release all of the buttons.

ⓘ The remote control for the door drive is not included in the scope of delivery of the garage door opener.

Synchronising the rolling code

⚠ DANGER Risk of fatal injuries due to exhaust gases

Combustion engines emit poisonous exhaust gases such as carbon monoxide. Breathing in these exhaust gases is hazardous to health and results in poisoning.

▶ Never leave the engine and, if present, the stationary heater, running in an enclosed space without sufficient ventilation.

⚠ WARNING Risk of injury by becoming trapped when opening and closing a garage door

When you operate or program a garage door with an integrated garage door opener, persons can become trapped or struck by the garage door if they stand within its range of movement.

▶ Always make sure that nobody is within the range of the garage door's movement.

Before programming the garage door opener, park the vehicle outside the garage. Make sure that the vehicle is switched on but not started.

Requirements

- The door system uses a rolling code.
- The vehicle must be within range of the garage door or door drive.
- The vehicle as well as persons and objects are located outside the range of movement of the door.

ⓘ The garage door opener function is always available when the vehicle is switched on.

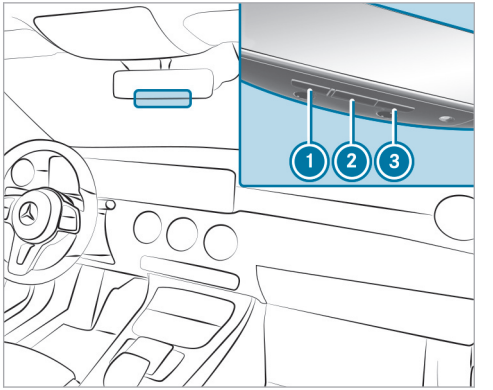

▶ Press the programming button on the door drive unit.
Initiate the next step within approximately 30 seconds.

▶ Press previously programmed button ①, ② or ③ repeatedly until the door closes.
When the door closes, programming is completed.

ⓘ Please also read the operating instructions for the door drive.

Troubleshooting when programming the remote control

DANGER Risk of fatal injuries due to exhaust gases

Combustion engines emit poisonous exhaust gases such as carbon monoxide. Breathing in these exhaust gases is hazardous to health and results in poisoning.

▶ Never leave the engine and, if present, the stationary heater, running in an enclosed space without sufficient ventilation.

WARNING Risk of injury by becoming trapped when opening and closing a garage door

When you operate or program a garage door with an integrated garage door opener, persons can become trapped or struck by the garage door if they stand within its range of movement.

▶ Always make sure that nobody is within the range of the garage door's movement.

Before programming the garage door opener, park the vehicle outside the garage. Make sure that the vehicle is switched on but not started.

ⓘ The garage door opener is always available when the vehicle is switched on.

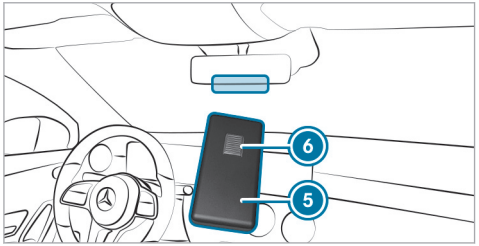

▶ Check if the transmitter frequency of the remote control ⑤ is supported.

▶ Replace the batteries in the remote control ⑤.

▶ Hold remote control ⑤ at various angles from a distance of 1 cm to 8 cm front of the inside rearview mirror. You should test every position for at least 25 seconds before trying another position.

▶ Hold remote control ⑤ at the same angles at various distances in front of the rearview mirror. You should test every position for at least 25 seconds before trying another position.

▶ Press the button ⑥ on the remote control ⑤ again before transmission ends on remote controls that transmit only for a limited period.

▶ Angle the aerial line of the garage door opener unit towards the remote control.

ⓘ It is possible that older garage doors cannot be operated using the remote control in the inside rearview mirror even after you have successfully performed the measures described above. If this is the case, contact the HomeLink® Hotline.

ⓘ Support and additional programming information:

- with the HomeLink® Hotline on (0) 0800 046 635 465 or +49 (0) 7132 3455 733 (chargeable)
- on the Internet at https://www.homelink.com

Opening or closing the garage door

⚠ DANGER Risk of fatal injuries due to exhaust gases

Combustion engines emit poisonous exhaust gases such as carbon monoxide. Breathing in these exhaust gases is hazardous to health and results in poisoning.

▶ Never leave the engine and, if present, the stationary heater, running in an enclosed space without sufficient ventilation.

⚠ WARNING Risk of injury by becoming trapped when opening and closing a garage door

When you operate or program a garage door with an integrated garage door opener, persons can become trapped or struck by the garage door if they stand within its range of movement.

▶ Always make sure that nobody is within the range of the garage door's movement.

Before programming the garage door opener, park the vehicle outside the garage. Make sure that the vehicle is switched on but not started.

Requirements

- The corresponding button is programmed to operate the door.

ⓘ The garage door opener function is always available when the vehicle is switched on.

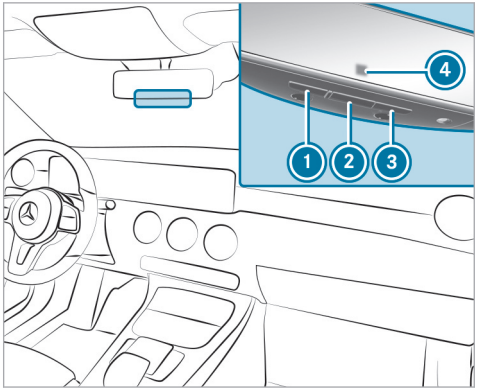

▶ Press and hold buttons ①, ② or ③ until the door opens or closes.

▶ If the indicator lamp ④ flashes yellow after approx. 20 seconds: Press the previously pressed button again and keep it pressed until the door opens or closes.

Clearing the garage door opener memory

DANGER Risk of fatal injuries due to exhaust gases

Combustion engines emit poisonous exhaust gases such as carbon monoxide. Breathing in these exhaust gases is hazardous to health and results in poisoning.

▶ Never leave the engine and, if present, the stationary heater, running in an enclosed space without sufficient ventilation.

WARNING Risk of injury by becoming trapped when opening and closing a garage door

When you operate or program a garage door with an integrated garage door opener, persons can become trapped or struck by the garage door if they stand within its range of movement.

▶ Always make sure that nobody is within the range of the garage door's movement.

Before programming the garage door opener, park the vehicle outside the garage. Make sure that the vehicle is switched on but not started.

ⓘ The garage door opener function is always available when the vehicle is switched on.

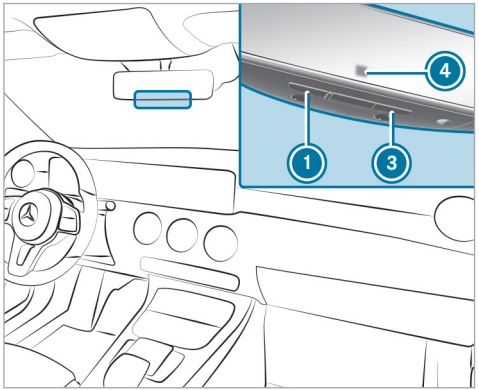

F177 0066 02

▶ Press and hold buttons ① and ③. Indicator lamp ④ lights up yellow.

▶ If indicator lamp ④ flashes green: release buttons ① and ③. The entire memory has been deleted.

Electric parking brake

Function of the electric parking brake (applying automatically)

WARNING Accident- and risk of injury with unsupervised children in the vehicle

If you leave children unattended in the vehicle, they can in particular

- Open doors and thereby endanger other persons or road users.
- get out of the car and are hit by traffic.
- Operate vehicle equipment and become trapped, forexample.

In addition, the children could also set the vehicle in motion, for exampleby:

- releasing the parking brake.
- change the gearbox setting.
- start the vehicle.

▶ Never leave children unattended in the vehicle.

▶ When leaving the vehicle, always take the SmartKey with you and lock the vehicle.

▶ Keep the key out of reach of children.

The electric parking brake is applied if the transmission is in position P and one of the following conditions is fulfilled:

- The vehicle is switched off.
- The seat belt tongue is not inserted in the seat belt buckle of the driver's seat and the driver's door is opened.

ⓘ To prevent application: pull the handle of the electric parking brake (→ page 299).

In the following situations, the electric parking brake is also applied:

- The HOLD function is keeping the vehicle stationary.
- Active Parking Assist is keeping the vehicle stationary.
- Active Distance Assist DISTRONIC is bringing the vehicle to a standstill.
- **In addition, one of the following conditions must be fulfilled:**
  - The vehicle is switched off.
  - The seat belt tongue is not inserted in the seat belt buckle of the driver's seat and the driver's door is opened.
  - There is a system malfunction.
  - The power supply is insufficient.
  - The vehicle is stationary for a lengthy period.

When the electric parking brake is applied, the red Ⓟ indicator lamp lights up in the driver's display.

ⓘ The electric parking brake is not automatically applied if the vehicle is switched off by the ECO start/stop function.

Function of the electric parking brake (releasing automatically)

The electric parking brake is released when the following conditions are fulfilled:

- The driver's door is closed.
- The vehicle has been started.
- The transmission is in position D or R and you depress the accelerator pedal or you shift from transmission position P to D or R when on level ground.
- If the transmission is in position R, the boot lid must be closed.
- The seat belt tongue is inserted into the seat belt buckle of the driver's seat.

  If the seat belt tongue is not inserted into the seat belt buckle of the driver's seat, one of the following conditions must be fulfilled:
  - You shift from transmission position P.

    or

- You have previously driven at speeds greater than 3 km/h.

When the electric parking brake is released, the red (P) indicator lamp in the driver's display goes out.

Applying/releasing the electric parking brake manually

WARNING Accident- and risk of injury with unsupervised children in the vehicle

If you leave children unattended in the vehicle, they can in particular

- Open doors and thereby endanger other persons or road users.
- get out of the car and are hit by traffic.
- Operate vehicle equipment and become trapped, forexample.

In addition, the children could also set the vehicle in motion, for exampleby:

- releasing the parking brake.
- change the gearbox setting.
- start the vehicle.

▶ Never leave children unattended in the vehicle.

▶ When leaving the vehicle, always take the SmartKey with you and lock the vehicle.

▶ Keep the key out of reach of children.

Applying

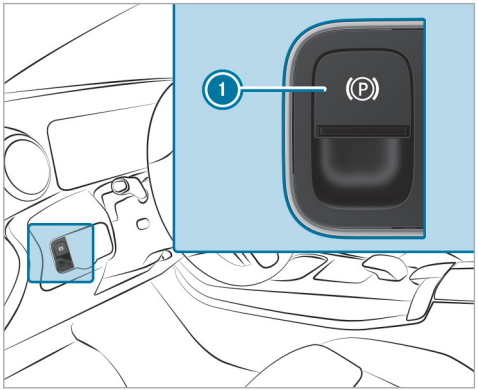

▶ Push handle 1.
The red (P) indicator lamp lights up in the driver's display.

ⓘ The electric parking brake is only securely applied if the red (P) indicator lamp is lit continuously.

Releasing

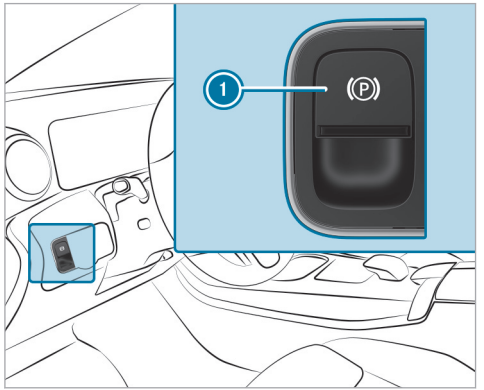

- Switch on the vehicle.
- Pull handle 1.
  The red (P) indicator lamp in the driver's display goes out.

Emergency braking

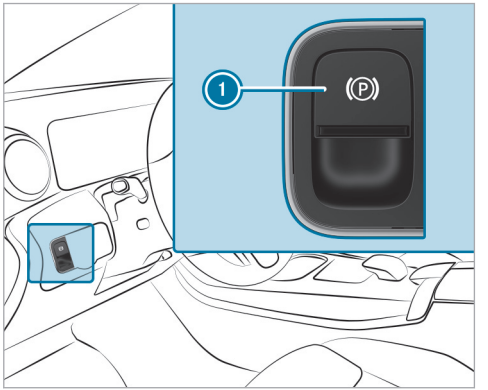

- Press and hold handle 1.
  As long as the vehicle is in motion, the Release parking brake message is displayed and the red (P) indicator lamp flashes.

  When the vehicle has been braked to a standstill, the electric parking brake is applied. The red (P) indicator lamp lights up in the driver's display.

Information on collision detection on a parked vehicle

If a collision is detected on the locked vehicle when towing protection is switched on, and the collision detection is switched on, when the vehicle is switched on, you will receive a message in the multimedia system.

You will receive information about the following points:

- The area of the vehicle that may have been damaged.
- The force of the impact.

The following situation can lead to inadvertent activation:

- Forexample, the parked vehicle is moved to a two-storey garage.

ⓘ Deactivate tow-away protection to prevent accidental activation. If you deactivate tow-away protection, collision detection will also be deactivated.
You can permanently deactivate collision detection via the multimedia system (→ page 301).

System limits

Detection may be restricted in the following situations:

- the vehicle is damaged without impact, forexample, if an outside mirror is torn off or the paint is damaged by a key
- an impact occurs at low speed
- the electric parking brake is not applied

ⓘ You are responsible for your vehicle. Convince yourself that your vehicle is free of damage and roadworthy.

Setting collision detection for a parked vehicle

Multimedia system:

→ ⌂ ▸▸ Settings ▸▸ Vehicle ▸▸ Open/close ▸▸ Vehicle protection

▶ Activate or deactivate the function via Collision notification.

ⓘ A maximum of three incidents can be registered. Up to 15 photos are taken for every incident. In the event of another incident, the photos of the first incident will be overwritten if they have not been deleted already.

Activating or deactivating the collision photos function

Please note that legal restrictions regarding automatic recording of the vehicle surroundings may be in place in certain countries.

▶ Activate or deactivate Collision photos.

Transferring the collision photos with the Mercedes me app

▶ Select Upload collision photos.

▶ Select Upload automatically.

▶ Scan the generated QR code on the media display with the Mercedes me app.
The encrypted collision photos will then be uploaded to Mercedes me.

ⓘ Any device that can scan QR codes can be used to view the collision photos in the Mercedes me app.

Copying the collision photos to a USB flash drive

▶ Connect a USB flash drive (→ page 540).

▶ Select Manage collision photos.

▶ Select Copy (USB).
All collision photos are copied to the USB flash drive.

ⓘ Only use FAT32 or exFAT formatted USB storage devices to ensure secure operation.

Deleting collision photos

▶ Select Manage collision photos.

▶ Select Delete.
All collision photos are deleted.

Notes on parking up the vehicle

If you leave the vehicle parked up for longer than six weeks, it may suffer damage through disuse.

The 12 V battery may also be impaired or damaged by heavy discharging.

Do not disconnect the 12 V battery even if the vehicle is left idle for a lengthy period.

ⓘ Further information can be obtained at a qualified specialist workshop.

Standby mode (extension of the starter battery's period out of use)

Standby mode function

ⓘ This function is not available for all models.

If standby mode is activated, energy loss will be minimised during extended periods of non-operation.

Standby mode is characterised by the following:

- The starter battery is preserved.
- The maximum non-operational time appears on the driver's display.
- The connection to online services is interrupted.
- The ATA (anti-theft alarm system) is not available.
- The interior protection and tow-away protection functions are not available.
- The function for detecting collisions on a parked vehicle is not available.

If the following conditions are fulfilled, standby mode can be activated or deactivated using the multimedia system:

- The vehicle is switched on.
- The vehicle has not been started.

Exceeding the vehicle's displayed non-operational time may cause inconvenience; i.e. it cannot be guaranteed that the starter battery will reliably start the vehicle.

Charge the starter battery in the following situations:

- If the vehicle's non-operational time needs to be extended.
- If the starter battery charge level is insufficient for standby mode.

ⓘ Standby mode is automatically deactivated when the vehicle is switched on.

Activating/deactivating standby mode (parking up the vehicle)

Requirements:

- The power supply is switched on.
- The vehicle is not switched on.

Multimedia system:

⮕ ⌂ ▸▸ Settings ▸▸ Vehicle ▸▸ Other functions

▶ Activate or deactivate Standby mode.

Driving and driving safety systems

Driving systems and your responsibility

Your vehicle is equipped with driving systems which assist you in driving, parking and manoeuvring the vehicle. The driving systems are only aids. They are not a substitute for you paying

attention to your surroundings and do not relieve you of your responsibility pertaining to road traffic law. The driver is always responsible for maintaining a safe distance to the vehicle in front, for vehicle speed, for braking in good time and for staying in lane. Pay attention to the traffic conditions at all times and intervene when necessary. Be aware of the limitations regarding the safe use of these systems.

Driving systems can neither reduce the risk of accident if you fail to adapt your driving style nor override the laws of physics. They cannot always take into account road, weather or traffic conditions.

ⓘ Some driving systems can regulate or limit the speed to a previously set value. Draw attention to the stored speed when changing drivers.

Information on vehicle sensors and cameras

Some driving and driving safety systems use cameras as well as radar or ultrasonic sensors to monitor the area in front of, behind or next to the vehicle.

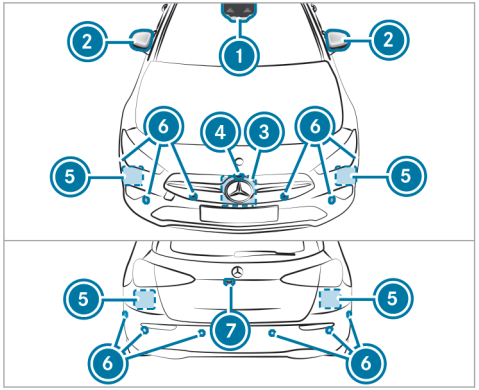

F177 0066 02

1. Multifunction camera
2. Cameras in the outside mirrors
3. Front radar
4. Front camera
5. Corner radars
6. Ultrasonic sensors
7. Reversing camera

⚠ WARNING Risk of accident due to restricted detection performance of vehicle sensors and cameras

If the area around vehicle sensors or cameras is covered, damaged or dirty, certain driving and safety systems cannot function correctly. There is a risk of an accident.

- ▶ Keep the area around vehicle sensors or cameras clear of any obstructions and clean.
- ▶ Have damage to the bumper, radiator grille or stone chipping in the area of the front and rear windows repaired at a qualified specialist workshop.

Particularly, keep the areas around the sensors and cameras free of dirt, ice or slush (→ page 567). The sensors and cameras must not be covered and the detection ranges around them must be kept free. Do not attach additional licence plate brackets, advertisements, stickers, foils or foils to protect against stone chippings in the detection range of the sensors and cameras.

Make sure there are no overhanging loads protruding into the detection range.

If there is damage to a bumper or the radiator grille, or after an impact, have the function of the sensors checked at a qualified specialist workshop. Have damage or stone chipping in the area of the cameras on the front and rear windows repaired at a qualified specialist workshop.

ⓘ The reversing camera can extend and retract automatically for the purpose of calibration, even though there is no camera image in the display.

Overview of driving systems and driving safety systems

- ABS (→ page 305)
- BAS (→ page 305)
- ESP® (→ page 305)
- ESP® (Mercedes-AMG vehicles) (→ page 306)
- ESP® Crosswind Assist (→ page 308)
- ESP® trailer stabilisation (→ page 308)
- EBD (→ page 310)
- STEER CONTROL (→ page 311)
- HOLD function (→ page 311)
- Hill Start Assist (→ page 312)
- Start-off assist (→ page 313)
- Adaptive Brake Lights (→ page 313)
- ATTENTION ASSIST (→ page 313)
- Cruise control (→ page 315)
- Limiter (→ page 316)
- Speed Limit Assist (country-dependent) (→ page 335)
- Traffic Sign Assist (→ page 338)
- Traffic light view (→ page 343)
- Suspension with adaptive damping adjustment (→ page 347, 348)
- AMG RIDE CONTROL (→ page 348)
- RACE START (→ page 349)

Driving Assistance Package

ⓘ The following functions are part of the Driving Assistance Package. Certain functions are only available in some countries. Some functions are also available without the Driving Assistance Package, albeit with restricted functionality.

- Active Distance Assist DISTRONIC (→ page 318)
- Active Speed Limit Assist (→ page 324)
- Route-based speed adaptation (→ page 325)
- Active Brake Assist (→ page 330)
- Active Steering Assist (→ page 327)
- Active Emergency Stop Assist (→ page 329)
- Blind Spot Assist with exit warning (→ page 343)
- Active Lane Keeping Assist (→ page 345)

Parking Package

ⓘ The availability of individual functions is country- and equipment-dependent.

- Reversing camera (→ page 350)
- 360° Camera (→ page 353)
- Parking Assist PARKTRONIC (→ page 358)
- Active Parking Assist (→ page 362)

Function of ABS

The Anti-lock Brake System (ABS) regulates the brake pressure in critical driving situations:

- During braking, for instance, at maximum full-stop braking or if there is insufficient tyre traction, the wheels are prevented from locking.
- Vehicle steerability while braking is ensured.

If ABS intervenes when braking, you will feel a pulsing in the brake pedal. The pulsating brake pedal can be an indication of hazardous road conditions and can serve as a reminder to take extra care while driving.

System limits

- ABS is active from speeds of approximately 5 km/h.
- ABS may be impaired or may not function if a malfunction has occurred and the yellow ABS warning lamp lights up continuously after the vehicle is started.

Function of BAS

WARNING Risk of an accident caused by a malfunction in BAS (Brake Assist System)

If BAS is malfunctioning, the braking distance in an emergency braking situation is increased.

▶ Depress the brake pedal with full force in emergency braking situations. ABS prevents the wheels from locking.

The Brake Assist System (BAS) supports your emergency braking situation with additional brake force.

If you depress the brake pedal quickly, BAS is activated:

- BAS automatically boosts the brake pressure.
- BAS can shorten the braking distance.
- ABS prevents the wheels from locking.

The brakes will function as usual once you release the brake pedal. BAS is deactivated.

Function of ESP®

WARNING Risk of skidding if ESP® is deactivated

If you deactivate ESP®, ESP® cannot carry out vehicle stabilisation.

▶ ESP® should only be deactivated in the following situations.

The Electronic Stability Program (ESP®) can monitor and improve driving stability and traction in the following situations within physical limits:

- When pulling away on wet or slippery carriageways.
- When braking.

If the vehicle deviates from the direction desired by the driver, ESP® can stabilise the vehicle by intervening in the following ways:

- One or more wheels are braked.
- The engine output is adapted according to the situation.

When ESP® is deactivated, the [OFF] warning lamp lights up continuously:

- Driving stability will no longer be improved.
- The drive wheels could spin.
- ETS/4ETS traction control is still active.

ⓘ When ESP® is deactivated, you are still assisted by ESP® when braking.

When the [ESP] warning lamp flashes, one or several wheels has reached its grip limit:

- Adapt your driving style to suit the current road and weather conditions.
- Do not deactivate ESP®.
- Only depress the accelerator pedal as far as is necessary when pulling away.

Deactivate ESP® in the following situations to improve traction:

- When using snow chains.
- In deep snow.
- On sand or gravel.

ⓘ Spinning the wheels results in a cutting action, which enhances traction.

If the [ESP] warning lamp lights up continuously, ESP® is not available due to a malfunction.

Observe the following information:

- warning and indicator lamps (→ page 838)
- Display messages (→ page 755)

ETS/4ETS

ETS/4ETS traction control (Electronic Traction System) is part of ESP® and makes it possible to pull away and accelerate on a slippery carriageway.

ETS/4ETS can improve the vehicle's traction by intervening in the following ways:

- The drive wheels are braked individually if they spin.
- More drive torque is transferred to the wheel or wheels with traction.

Influence of drive programs on ESP®

The drive programs enable ESP® to adapt to different weather and road conditions as well as the driver's preferred driving style. Depending on the selected drive program, the appropriate ESP(→ page 253, 254)® mode will be activated.

Function of ESP® (Mercedes-AMG vehicles)

You can choose between the following modes of the Electronic Stability Program (ESP®):

- ESP® ON
- ESP® SPORT
- ESP® OFF

Characteristics when ESP® is activated

ESP® monitors and improves driving stability and traction, particularly in the following situations:

- When moving off on wet or slippery roads.
- When braking.
- **Vehicles with trailer coupling:** in trailer operation from speeds of 65 km/h, if the vehicle/trailer combination begins to sway from side to side.

- When there is a strong crosswind and a driving speed of approximately 80 km/h to 200 km/h.

ESP® can stabilise the vehicle by intervening in the following ways:

- One or more wheels are braked.
- The engine output is adapted according to the situation.

ESP® is activated every time the engine is started, regardless of whether ESP® SPORT or ESP® OFF was selected.

When the warning lamp flashes, one or several wheels has reached its grip limit:

- Adapt the driving style to suit the prevailing road and weather conditions.
- Do not deactivate ESP® under any circumstances.
- Only depress the accelerator pedal as far as necessary.

Characteristics of ESP® SPORT

WARNING Risk of skidding if ESP® SPORT is used incorrectly

When you activate ESP® SPORT, there is an increased risk of skidding and having an accident.

▶ Activate ESP® SPORT only in the circumstances described below.

If ESP® SPORT is selected, the warning lamps OFF and ESP SPORT light up continuously.

Select ESP® SPORT when the vehicle's inherent oversteering and understeering characteristics are desired, e.g. on cordoned-off roads.

Driving with ESP® SPORT or with ESP® deactivated requires an extremely skilled and experienced driver.

If ESP® SPORT is activated and one or more wheels start to spin, the warning lamp flashes. ESP® then only stabilises the vehicle to a limited degree.

ESP® SPORT also has the following characteristics:

- ESP® only improves driving stability to a limited degree.
- ETS/4ETS traction control is still active.
- The engine's torque is only restricted to a limited degree and the drive wheels can spin.

  The spinning of the wheels results in a cutting action for better traction on loose surfaces.
- ESP® continues to provide assistance when the brakes are firmly applied.
- **Vehicles with trailer coupling:** stabilisation of the vehicle/trailer combination is no longer active.
- Crosswind Assist is no longer active.

Characteristics when ESP® is deactivated

WARNING Risk of skidding if ESP® is deactivated

If you deactivate ESP®, ESP® cannot carry out vehicle stabilisation.

▶ ESP® should only be deactivated in the following situations.

If ESP® is switched off, the [OFF] and [ESP OFF] warning lamps light up continuously.

Deactivating ESP® has the following effects:

- Driving stability will no longer be improved.
- The drive wheels could spin.
- ETS/4ETS traction control is still active.
- **Vehicles with trailer coupling:** stabilisation of the vehicle/trailer combination is no longer active.
- Crosswind Assist is no longer active.

ⓘ Even when ESP® is deactivated, you are still assisted by ESP® when braking hard.

It may be best to activate ESP® SPORT or deactivate ESP® in the following situations:

- When using snow chains.
- In deep snow.
- On sand or gravel.

ⓘ Spinning the wheels results in a cutting action, which enhances traction.

ⓘ Activate ESP® as soon as the situations described above no longer apply. ESP® will otherwise not be able to stabilise the vehicle if the vehicle starts to skid or a wheel starts to spin.

If the warning lamp [ESP] lights up continuously, ESP® is not available owing to a malfunction.

Observe the display messages and warning and indicator lamps which are displayed

- Indicator and warning lamps (→ page 838)
- Display messages (→ page 755)

ETS/4ETS (Electronic Traction System)

ETS/4ETS traction control is part of ESP®.

ETS/4ETS can improve the vehicle's traction by intervening in the following ways:

- The drive wheels are braked individually if they spin.
- More drive torque is transferred to the wheel or wheels with traction.

Function of ESP® Crosswind Assist

ESP® Crosswind Assist detects sudden gusts of side wind and helps the driver to keep the vehicle in the lane:

- ESP® Crosswind Assist is active at vehicle speeds between approx. 80 km/h and 200 km/h when driving straight ahead or cornering slightly.
- The vehicle is stabilised by means of individual brake application on one side.

Function of ESP® trailer stabilisation

⚠ **WARNING** Risk of accident in poor road and weather conditions

In poor road and weather conditions, the trailer stabilisation cannot prevent lurching of the vehicle/trailer combination. Trailers with a high centre of gravity may tip over before ESP® detects this.

▶ Always adapt your driving style to suit the current road and weather conditions.

When driving with a trailer, ESP® can stabilise your vehicle if the trailer begins to swerve from side to side:

- ESP® trailer stabilisation is active above speeds of 65 km/h.
- Slight swerving is reduced by means of a targeted, individual brake application on one side.
- In the event of severe swerving, the operating energy output is also reduced and all wheels are braked.

ESP® trailer stabilisation may be impaired or may not function if:

- The trailer is not connected correctly or is not detected properly by the vehicle.

Activating / deactivating ESP® (Electronic Stability Program)

Multimedia system:

ⓘ ESP® can only be activated/deactivated using quick access when at least one other function is available in quick access. ESP® can otherwise be found in the Assistance menu.

▶ Select ESP.

▶ Select On or Off.

If the ESP® OFF warning lamp lights up continuously, ESP® is deactivated.

Note the information on warning lamps and display messages that may appear in the driver display.

Setting ESP® with the steering-wheel button

ⓘ You can also adjust ESP® via the multimedia system (→ page 310).

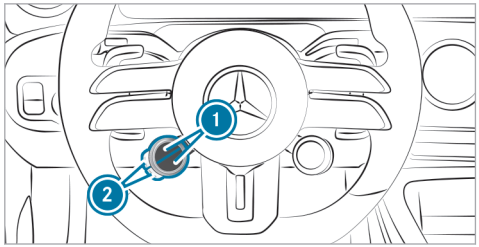

▶ **To set ESP®:** press upper or lower display button 1 repeatedly, until it displays the symbol.

ⓘ If the display button does not show the symbol, then it is hidden. How functions are displayed and the order in which they are displayed can be set in the multimedia system (→ page 251).

The lane colour of the button symbol indicates the current setting:

- (blue): ESP® ON
- (yellow): ESP® SPORT
- (red): ESP® OFF

- **To set ESP® SPORT:** briefly press button ② when ESP® is activated.
  The road in the [ESP OFF] button symbol lights up yellow.
  The [ESP OFF] and [ESP SPORT] warning lamps appear in the driver's display.
- **To deactivate ESP®:** select ESP® SPORT and then press and hold button ②.
  The road in the [ESP OFF] button symbol lights up red.
  The [ESP OFF] and [ESP OFF] warning lamps appear in the driver's display.

ⓘ When you deactivate ESP® [ESP OFF] in drive program [ ], AMG Dynamics automatically switches to the **Master** level.

- **To activate ESP®:** briefly press button ② when ESP® SPORT is selected or ESP® is deactivated.
  The road in the [ESP OFF] button symbol lights up blue.
  The [ESP OFF] and [ESP SPORT] or [ESP OFF] warning lamps go out.

If the [ ] symbol is shown with a red **!** on the display button, ESP® is malfunctioning. Observe the information on warning lamps and display messages which are shown in the driver's display.

Setting ESP® in the multimedia system

Multimedia system:

→ [⌂] ▸▸ Settings ▸▸ Vehicle ▸▸ DYNAMIC SELECT

ⓘ The AMG DYNAMIC SELECT menu can also be accessed via the DYNAMIC SELECT button.

ESP is always active when the vehicle is started. The road in the [ESP OFF] button symbol lights up in blue.

- **To set ESP SPORT:** with ESP activated, briefly press [ESP OFF] to change to the Sport program.
  The road in the [ESP OFF] button symbol lights up in yellow.
- **To deactivate ESP :** set the ESP SPORT program and press and hold [ESP OFF] to deactivate ESP.
  The road in the [ESP OFF] button symbol lights up in red. The [ESP OFF] and [ESP OFF] warning lamps appear in the driver display.
- **To activate ESP:** briefly press [ESP OFF] in ESP SPORT or if ESP is deactivated.
  The road in the [ESP OFF] button symbol lights up in blue.
  The [ESP OFF] and [ESP SPORT] or [ESP OFF] warning lamps go out.

ⓘ You can also adjust ESP via the steering-wheel button (→ page 309).

Function of EBD

Electronic Brakeforce Distribution (EBD) is characterised by the following:

- Monitoring and regulating the brake pressure on the rear wheels.
- Improved driving stability when braking, especially on bends.

Function of STEER CONTROL

STEER CONTROL assists you by transmitting a noticeable steering force to the steering wheel in the direction required for vehicle stabilisation.

This steering recommendation is given in the following situations:

- both right wheels or both left wheels are on a wet or slippery road surface when you brake
- the vehicle starts to skid

Mercedes-AMG vehicles: if you brake and both right wheels or both left wheels are on a wet or slippery road surface, you will receive a steering recommendation. If the vehicle is skidding, you will not receive a steering recommendation.

System limits

STEER CONTROL may be impaired or may not function in the following situations:

- ESP® is deactivated.
- ESP® is malfunctioning.
- The steering is malfunctioning.

If ESP® is malfunctioning, you will be assisted further by the power steering.

HOLD function

HOLD function

The HOLD function holds the vehicle at a standstill without requiring you to depress the brake pedal, e.g. while waiting in traffic.

The HOLD function is only an aid. The responsibility for the vehicle safely standing still remains with the driver.

System limits

The HOLD function is only intended to provide assistance when driving and is not a sufficient means of safeguarding the vehicle against rolling away when stationary.

- The incline must not be greater than 30%.

Activating/deactivating the HOLD function

WARNING Risk of an accident due to the HOLD function being active when you leave the vehicle

If the vehicle is only braked with the HOLD function it could, in the following situations, roll away:

- If there is a malfunction in the system or in the power supply.
- If the HOLD function is deactivated by depressing the accelerator pedal or brake pedal, e.g. by a vehicle occupant.

▶ Always secure the vehicle against rolling away before you leave it.

Requirements

- The vehicle is stationary.
- The driver's door is closed or the seat belt on the driver's side is fastened.
- The vehicle has been started or has been automatically switched off by the ECO start/stop function.

- The electric parking brake is released.
- Active Distance Assist DISTRONIC is deactivated.
- The transmission is in position D, R or N.

Activating the HOLD function

▶ Depress the brake pedal, and after a short time quickly depress further until the HOLD display appears in the driver's display.

▶ Release the brake pedal.

Deactivating the HOLD function

▶ Depress the accelerator pedal to pull away.

or

▶ Depress the brake pedal until the HOLD display disappears from the driver's display.

The HOLD function is deactivated in the following situations:

- Active Distance Assist DISTRONIC is activated.
- The transmission is shifted to position P.
- The vehicle is secured with the electric parking brake.

In the following situations, the vehicle is held by transmission position P and/or by the electric parking brake:

- The seat belt is unfastened and the driver's door is opened.
- The vehicle is switched off.
- There is a system malfunction.
- The power supply is insufficient.

In addition, the Brake immediately message may appear in the driver's display and a horn tone may sound at regular intervals.

▶ Immediately depress the brake pedal firmly until the warning message disappears. The HOLD function is deactivated.

▶ Additionally secure the vehicle against rolling away.

Function of Hill Start Assist

WARNING Risk of accident and injury due to the vehicle rolling away

After a short time, Hill Start Assist no longer holds the vehicle.

▶ Swiftly move your foot from the brake pedal to the accelerator pedal. Do not leave the vehicle when it is being held by Hill Start Assist.

Hill Start Assist holds the vehicle for a short time when pulling away on a hill under the following conditions:

- The transmission is in position D or R.
- The electric parking brake is released.

This gives you enough time to move your foot from the brake pedal to the accelerator pedal and depress it before the vehicle begins to roll away.

Function of Adaptive Brake Lights

Adaptive Brake Lights warn following traffic in an emergency braking situation with the following actions:

- flashing the brake lamps
- activating the hazard warning lights (→ page 48)

If the vehicle is braked sharply from speeds above 50 km/h, the brake lamps flash rapidly. This provides traffic travelling behind you with an even more noticeable warning.

Start-off assist

Function of the start-off assist

The start-off assist enables optimal vehicle acceleration from a standstill. For this, a suitably high-grip road surface is required, the tyres and vehicle must also be in good condition.

Do not activate the start-off assist on public roads.

Be sure to observe the safety notes and information on ESP® (→ page 305).

Activating the start-off assist

WARNING Risk of skidding and having an accident from wheels spinning

When you use start-off assist, individual wheels could spin and you could lose control of the vehicle.

If ESP® is deactivated, there is a risk of skidding and accident!

▶ Make sure that no persons or obstacles are in the close vicinity of your vehicle.

▶ Deactivating ESP® (→ page 309).

▶ Move the steering wheel to the straight-ahead position.

▶ Depress the brake pedal firmly with your left foot and keep it depressed.

▶ Engage the D drive position (→ page 261).

▶ Select the sportiest available drive program S+ or S (→ page 253, 254).

▶ Rapidly depress the accelerator pedal fully.

▶ Take your foot off the brake, but keep the accelerator pedal depressed.
The vehicle pulls away at maximum acceleration.

▶ Switch on ESP® once the acceleration procedure is complete. ESP® will otherwise not be able to stabilise the vehicle if the vehicle starts to skid or a wheel starts to spin.

Cancelling the start-off assist

▶ Remove your foot from the accelerator pedal.

▶ Reactivate the ESP®.

ATTENTION ASSIST

Function of ATTENTION ASSIST

ATTENTION ASSIST assists you on long, monotonous journeys, e.g. on motorways and trunk roads. If indicators of fatigue or increasing lapses in concentration on the driver's part are detected, the system suggests taking a break.

ATTENTION ASSIST is only an aid. It cannot always detect fatigue or lapses in concentration in time. The system is not a substitute for a well-res-

ted and attentive driver. On long journeys, take regular breaks in good time that allow for adequate recovery.

You can choose between two settings:

- **Standard:** normal system sensitivity.
- **Sensitive:** higher system sensitivity. The driver was warned earlier, and the attention level detected by ATTENTION ASSIST has adapted accordingly.

If drowsiness or increasing lapses in concentration are detected, the ATTENTION ASSIST: Take a break! warning appears on the driver's display. You can acknowledge the message and take a break where necessary. If you do not take a break and ATTENTION ASSIST continues to detect increasing lapses in concentration, you will be warned again after a minimum of 15 minutes.

The following information is displayed in the driver's display:

- The length of the journey since the last break
- the attention level determined by ATTENTION ASSIST

The more segments (1) of the circle displayed, the higher the detected attention level. Fewer segments (1) are displayed in the circle as the attention level decreases.

If the ATTENTION ASSIST is unable to calculate the attention level and cannot issue a warning, the System suspended message appears.

If the driver display shows a warning, a service area search is offered in the MBUX multimedia system. You can select a rest area and start navigation to this rest area.

When you restart the vehicle, ATTENTION ASSIST is automatically switched on. The last selected sensitivity level remains stored.

System limits

ATTENTION ASSIST is active in the 60 km/h to 200 km/h speed range.

If the system is unavailable due to a fault, the ATTENTION ASSIST warning light continuously illuminates the driver display.

Particularly in the following situations, ATTENTION ASSIST only functions in a restricted manner and warnings may be delayed or not occur:

- If you have been driving for less than approximately 30 minutes.
- If the road condition is poor (uneven road surface or potholes).
- If there is a strong side wind.
- If you adopt a sporty driving style (high cornering speeds or high acceleration rates).

- If the Steering Assist function of Active Distance Assist DISTRONIC is active.
- If the clock is set to the incorrect time.
- If you change lanes and vary your speed frequently in active driving situations.

Also, observe any information regarding display messages that can be displayed in the driver's display.

The ATTENTION ASSIST drowsiness or alertness assessment is reset and restarted when continuing the journey in the following situations:

- You switch off the vehicle.
- If you unfasten your seat belt and open the driver's door (e.g. to change drivers or take a break).

Setting ATTENTION ASSIST

Multimedia system:

→ ⌂ ▸▸ Settings ▸▸ Assistance ▸▸ Assistance ▸▸ ATTENTION ASSIST

Setting the sensitivity

▶ Select ⚙ next to ATTENTION ASSIST.

▶ Select Standard or Sensitive.

Cruise control and limiter

Function of cruise control

Cruise control regulates the speed to the value selected by the driver.

Forexample, the stored speed is not deleted if you accelerate to overtake. If you remove your foot from the accelerator pedal after overtaking, cruise control will resume speed regulation back to the stored speed.

You can store any speed above 20 km/h up to the maximum design speed or up to the set winter tyre limit.

Observe the notes on driving systems and your responsibility; you may otherwise fail to recognise dangers (→ page 302).

Displays in the driver's display

Grey: cruise control is selected but not yet active or temporarily passive.

Green: cruise control is active.

A stored speed appears under the display and is indicated in the speedometer.

System limits

Cruise control may be unable to maintain the stored speed on uphill gradients. The stored speed is resumed when the gradient evens out.

Change into a lower gear in good time on long and steep downhill gradients. Take particular note of this when driving a laden vehicle. Doing so will make use of the engine's braking effect. This relieves the load on the brake system and prevents the brakes from overheating and wearing too quickly.

Do not use cruise control in the following situations:

- In traffic situations which require frequent changes of speed, e.g. in heavy traffic, on winding roads
- , and slippery roads. Accelerating can cause the drive wheels to lose traction, and the vehicle could skid.
- when visibility is poor

Function of the limiter

The limiter restricts the speed of the vehicle. To reduce the speed to the set speed, the limiter applies the brakes automatically.

You can limit the speed as follows:

- **Variable:** for short-term limitation of the driving speed, e.g. in built-up areas
- **Permanent:** for a longer-term speed restriction, e.g. in winter tyre mode

You can store any speed above 20 km/h up to the maximum design speed or up to the set winter tyre limit. You can also perform settings while the vehicle is stationary if the vehicle has been started.

Observe the notes on driving systems and your responsibility; you may otherwise fail to recognise dangers (→ page 302).

Displays in the driver's display

LIM **Grey:** variable limiter is selected but not yet activated.

LIM **Flashing grey:** variable limiter is temporarily passive.

LIM **Green:** variable limiter is activated.

A stored speed appears under the LIM display and is indicated in the speedometer.

If you depress the accelerator pedal beyond the pressure point (kickdown), the variable limiter switches to passive mode. The message LIM passive appears in the driver's display, and the indicator LIM flashes.

The variable limiter is reactivated in the following situations:

- If the vehicle speed drops below the stored speed.
- If the stored speed is called up.
- If you store a new speed.

Operating cruise control or the variable limiter

⚠ **WARNING** Risk of accident due to stored speed

If you call up the stored speed and this is lower than your current speed, the vehicle decelerates.

▶ Take into account the traffic situation before calling up the stored speed.

Requirements

Cruise control

- Cruise control is selected.
- ESP® must be activated, but not intervening.
- The vehicle speed is at least 20 km/h.
- The transmission is in position D.

Variable limiter

- The variable limiter is selected.

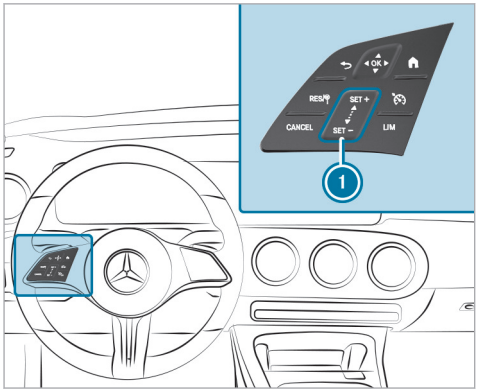

Steering wheel control panel for cruise control and variable limiter

RES/	Adopts the stored/detected speed
CANCEL	Deactivates cruise control/the variable limiter
1 SET + SET -	Control panel to increase/decrease speed
	Selects cruise control
LIM	Selects the variable limiter

Operating cruise control and the variable limiter:

▶ Press the corresponding button with only one finger or swipe on the control panel.

Switching between cruise control and the variable limiter

▶ **To select cruise control:** press .

▶ **To select the variable limiter:** press LIM.

ⓘ Vehicles with Active Distance Assist DISTRONIC: the variable limiter is selected by a different button (→ page 321).

Activating cruise control or the variable limiter

▶ Press SET + or SET - on the control panel 1.
The current travel speed is stored and maintained by the vehicle's cruise control, or is restricted by the variable limiter.

or

▶ Press RES/.
The last stored speed is called up and maintained by the vehicle's cruise control, or is restricted by the variable limiter.

If the last stored speed has previously been deleted, the current vehicle speed is stored.

ⓘ When you switch off the vehicle, the last speed stored is deleted.
When you activate cruise control or Active Distance Assist DISTRONIC, the last speed stored for the variable limiter is deleted.

Increasing/decreasing the stored speed

▶ To increase the stored speed: swipe upwards from the bottom of control panel 1.
- The stored speed is increased by 1 km/h.

▶ To decrease the stored speed: swipe downwards from the top of control panel 1.
- The stored speed is decreased by 1 km/h.

or

▶ Briefly press SET + or SET - on the control panel 1.
The stored speed is increased or decreased to the next increment of ten (e.g. to 50 km/h or 60 km/h).

or

▶ Press and hold SET+ or SET- on the control panel ①.
The stored speed is increased or decreased to the next increment of ten and afterwards by increments of 10 km/h.

or

▶ Accelerate the vehicle to the desired speed.

▶ Press SET+ on the control panel ①.

ⓘ When the variable limiter is switched to passive mode, you cannot increase or decrease its stored speed in increments of 1 km/h.

Adopting a detected speed

If cruise control/variable limiter is activated and Traffic Sign Assist has detected a speed restriction sign with a maximum permissible speed and this is displayed in the driver's display:

▶ Press RES/.
The maximum permissible speed shown by the traffic sign is stored and the vehicle maintains or does not exceed this speed.

Deactivating cruise control or the variable limiter

▶ Press CANCEL.

ⓘ If you brake, deactivate ESP® or if ESP® intervenes, cruise control is deactivated. The variable limiter is not deactivated.

ⓘ When you switch off the vehicle, the last speed stored is deleted.
When you activate cruise control or Active Distance Assist DISTRONIC, the last speed stored for the variable limiter is deleted.

Information on the permanent limiter

If the vehicle should never exceed a specific speed (e.g. for driving in winter tyre mode), you can set this speed with the permanent limiter.

You do this by limiting the speed between 160 km/h and 240 km/h in the multimedia system (→ page 43).

Shortly before the set speed is reached, it appears on the driver's display. When you confirm the message, display messages no longer appear until you switch off the vehicle. The speed will only be displayed again once the vehicle has been restarted or if the set speed is changed.

The permanent limiter does not switch to passive mode even during kickdown and the driven speed remains below the set speed.

Setting the speed limit for winter tyres

Multimedia system:

→ ⌂ ▸▸ Settings ▸▸ Vehicle ▸▸ Driving ▸▸ Winter tyre limit

▶ Activate or deactivate Winter tyre limit.

Setting a speed

▶ Select Winter tyre limit.

▶ Select a speed.

Active Distance Assist DISTRONIC

Function of Active Distance Assist DISTRONIC

Active Distance Assist DISTRONIC maintains the set speed on free-flowing roads. If vehicles are detected ahead, the set distance is maintained, if necessary until the vehicle comes to a standstill. The vehicle accelerates or brakes depending on the distance to the vehicle in front and the set speed.

The speed and distance to the vehicle in front are set and saved using the steering wheel.

Available speed range: 20 km/h - 160 km/h

Other features of Active Distance Assist DISTRONIC:

- Adjusts the driving style depending on the selected drive program (energy-saving, comfortable or dynamic) (→ page 251)
- Initiates acceleration to the stored speed if the turn signal indicator is switched on to change to the overtaking lane
- **Vehicles with Driving Assistance Package:**
  - Reacts to stationary vehicles detected in urban speed ranges (except bicycles and motorcycles)
  - Takes one-sided overtaking restrictions into account on motorways or multi-lane roads with separate carriageways (country-dependent)

If the vehicle is braked to a standstill by Active Distance Assist DISTRONIC on multi-lane separated roadways, it can automatically follow the vehicle in front as it moves off again, depending on the equipment. If a critical situation is detected when driving off, a visual and acoustic warning is issued indicating that the driver must now take control of the vehicle. The vehicle is not accelerated any further.

Observe the notes on driving systems and your responsibility; you may otherwise fail to recognise potential dangers (→ page 302).

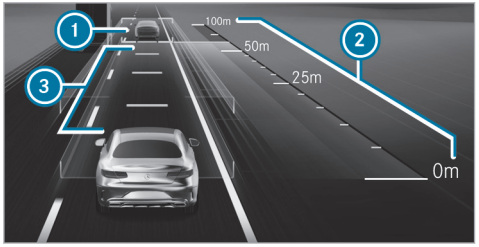

Display in the driver display in the Assistance menu

1. Vehicle in front
2. Distance indicator
3. Set specified distance

The vehicle detected in front 1 is highlighted in green. It may also be in the lane to the right of your vehicle in situations where it is not permitted to overtake on the left,for example, on UK motorways.

Permanent status display

Grey: Active Distance Assist DISTRONIC selected but not yet active

Green speedometer, grey vehicle: Active Distance Assist DISTRONIC active, speed set

Green: Active Distance Assist DISTRONIC active and vehicle detected

The stored speed is shown under the permanent status display and highlighted on the speedometer. Active Distance Assist DISTRONIC's status display is greyed out when in passive mode.

If the speed of the vehicle in front or the speed adjustment is less than the stored speed due to the route event ahead, the segments in the speedometer light up.

If you increase or decrease the specified distance 3, the display appears briefly.

ⓘ On motorways or high-speed major roads, the green vehicle symbol is displayed cyclically when the vehicle is ready to pull away.

ⓘ The system is switched to passive mode if you depress the accelerator pedal beyond the Active Distance Assist DISTRONIC setting. The following message appears briefly on the driver display suspended .

System limits

The system may be impaired or inoperative in the following instances, forexample:

- In snow, rain, fog, heavy spray, if there is glare, in direct sunlight or in greatly varying light conditions.
- The windscreen in the camera's area is dirty, misted, damaged or covered.
- If the radar sensors are dirty or covered.
- In multi-storey car parks or on roads with steep uphill or downhill gradients.
- If there are narrow vehicles in front, such as bicycles or motorcycles.

In addition, on slippery roads, braking or accelerating can cause one or several wheels to lose traction, and the vehicle could then begin skidding.

Do not use Active Distance Assist DISTRONIC in these situations.

WARNING Risk of accident from acceleration or braking by Active Distance Assist DISTRONIC

Active Distance Assist DISTRONIC may accelerate or brake in the following cases, for example:

- If the vehicle pulls away using Active Distance Assist DISTRONIC.
- If the stored speed is called up and is considerably faster or slower than the currently driven speed.
- If Active Distance Assist DISTRONIC no longer detects a vehicle in front or does not react to relevant objects.

▶ Always carefully observe the traffic conditions and be ready to brake at all times.

▶ Take into account the traffic situation before calling up the stored speed.

WARNING Risk of accident due to insufficient deceleration by Active Distance Assist DISTRONIC

Active Distance Assist DISTRONIC brakes your vehicle with up to 50% of the possible deceleration. If this deceleration is not sufficient, Active Distance Assist DISTRONIC alerts you with a visual and acoustic warning.

▶ Adjust your speed and maintain a suitable distance from the vehicle in front.

▶ Brake the vehicle yourself and/or take evasive action.

WARNING Risk of accident if detection function of Active Distance Assist DISTRONIC is impaired

Active Distance Assist DISTRONIC does not react or has a limited reaction:

- when driving on a different lane or when changing lanes

- to pedestrians, animals, bicycles or stationary vehicles, or unexpected obstacles
- to complex traffic conditions
- to oncoming vehicles and crossing traffic

As a result, Active Distance Assist DISTRONIC may neither give warnings nor intervene in such situations.

▶ Always observe the traffic conditions carefully and react accordingly.

You can watch an animation on this topic via the following link:

Operating Active Distance Assist DISTRONIC and the variable limiter

⚠ **WARNING** Risk of accident if detection function of Active Distance Assist DISTRONIC is impaired

Active Distance Assist DISTRONIC does not react or has a limited reaction:

- when driving on a different lane or when changing lanes
- to pedestrians, animals, bicycles or stationary vehicles, or unexpected obstacles
- to complex traffic conditions
- to oncoming vehicles and crossing traffic

As a result, Active Distance Assist DISTRONIC may neither give warnings nor intervene in such situations.

▶ Always observe the traffic conditions carefully and react accordingly.

⚠ **WARNING** Risk of accident from acceleration or braking by Active Distance Assist DISTRONIC

Active Distance Assist DISTRONIC may accelerate or brake in the following cases, for example:

- If the vehicle pulls away using Active Distance Assist DISTRONIC.
- If the stored speed is called up and is considerably faster or slower than the currently driven speed.
- If Active Distance Assist DISTRONIC no longer detects a vehicle in front or does not react to relevant objects.

▶ Always carefully observe the traffic conditions and be ready to brake at all times.

▶ Take into account the traffic situation before calling up the stored speed.

WARNING Risk of accident due to insufficient deceleration by Active Distance Assist DISTRONIC

Active Distance Assist DISTRONIC brakes your vehicle with up to 50% of the possible deceleration. If this deceleration is not sufficient, Active Distance Assist DISTRONIC alerts you with a visual and acoustic warning.

- ▶ Adjust your speed and maintain a suitable distance from the vehicle in front.
- ▶ Brake the vehicle yourself and/or take evasive action.

WARNING Risk of accident due to adjustment of speed by the Active Speed Limit Assistant

The speed adopted by the Active Speed Limit Assistant may be too high or incorrect in individual cases:

- For speed limits below 20 km/h
- In wet or foggy conditions

- ▶ Ensure that the speed driven always complies with the traffic regulations.
- ▶ Adjust the speed driven to the current traffic and weather conditions.

Requirements

Active Distance Assist DISTRONIC:

- The electric parking brake is released.
- ESP® is activated and is not intervening.
- The transmission is in position D.
- All the doors are closed.
- Check of the radar sensor system has been successfully completed.

Variable limiter:

- The variable limiter is selected.

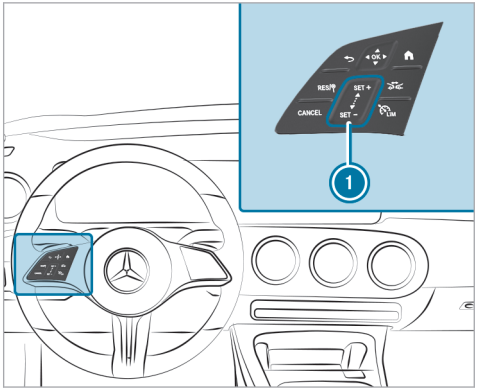

RES	Adopts the stored/detected speed
CANCEL	Deactivates Active Distance Assist DISTRONIC/the variable limiter
1 SET + SET -	Control panel to increase/decrease speed

Increases/decreases the specified distance

Switches between the variable limiter and Active Distance Assist DISTRONIC

▶ **To operate Active Distance Assist DISTRONIC or the variable limiter:** press the respective button with only one finger or swipe on the control panel.

Switches between the variable limiter and Active Distance Assist DISTRONIC

▶ Press [LIM].

Activating the variable limiter or Active Distance Assist DISTRONIC

▶ **To activate without a stored speed:** press [SET +], [SET -] or [RES/]. **Active Distance Assist DISTRONIC:** remove your foot from the accelerator pedal.
The current driving speed is stored and maintained by the vehicle using Active Distance Assist DISTRONIC or limited by the variable limiter.

or

▶ **To activate with a stored speed:** press [RES/]. **Active Distance Assist DISTRONIC:** remove your foot from the accelerator pedal.
The last stored speed is recalled and held by the vehicle using Active Distance Assist DISTRONIC or limited by the variable limiter.

If the stored speed has been deleted, the current vehicle speed is stored.

ⓘ When you switch off the vehicle, the stored speed is deleted. When you activate Active Distance Assist DISTRONIC, the last speed stored for the variable limiter is deleted.

Increasing or reducing the speed

▶ To increase the stored speed: swipe upwards from the bottom of control panel ①.
- The stored speed is increased by 1 km/h.

▶ To decrease the stored speed: swipe downwards from the top of control panel ①.
- The stored speed is decreased by 1 km/h.

or

▶ Briefly press [SET +] on the upper section or [SET -] on the lower section of control panel ①.
The stored speed is increased or reduced by 10 km/h.

or

▶ Press and hold [SET +] on the upper section or [SET -] on the lower section of control panel ①.
The stored speed is increased or reduced in increments of 10 km/h.

or

▶ Accelerate the vehicle to the desired speed.

▶ Press [SET +] on the upper section of control panel ①.

Adopting the speed limit shown on the driver's display

▶ Activate Active Distance Assist DISTRONIC or the variable limiter: press [SET +], [SET -] or [RES/].

▶ Accept the displayed speed limit: press RES/. The speed limit displayed on the driver's display is adopted as the stored speed. The vehicle adapts its speed to that of the vehicle in front, but only up to the stored speed, or limits its speed accordingly.

ⓘ A speed limit shown on the driver display is only adopted while driving, not when stationary.

Pulling away with Active Distance Assist DISTRONIC

▶ Activate Active Distance Assist DISTRONIC and remove your foot from the brake pedal.
▶ Press RES/.

or

▶ Depress the accelerator pedal briefly and firmly.
The functions of Active Distance Assist DISTRONIC remain active.

Reducing or increasing the specified distance from the vehicle in front

▶ Press .
The display appears. The specified distance is reduced by one level.

If the lowest level is already selected, the selection jumps to the highest level.

Deactivating Active Distance Assist DISTRONIC or the variable limiter

⚠ **WARNING** Risk of an accident due to Active Distance Assist DISTRONIC being active when you leave the driver's seat

If you leave the driver's seat while the vehicle is being braked by Active Distance Assist DISTRONIC only, the vehicle can roll away.

▶ Always deactivate Active Distance Assist DISTRONIC and secure the vehicle to prevent it from rolling away before you leave the driver's seat.

▶ Press CANCEL.

ⓘ If you brake, deactivate ESP® or if ESP® intervenes, Active Distance Assist DISTRONIC is deactivated. The variable limiter is not deactivated.

Function of Active Speed Limit Assist

If a changed speed limit is detected and the automatic adoption of speed limits is switched on, this is automatically adopted as the stored speed (→ page 326). Speed limits below 20 km/h are not accepted.

Adjustment of travel speed is initiated no later than when the vehicle is level with the traffic sign. For signs indicating entry into an urban zone, the speed is adapted according to that permitted within the built-up area. The speed restriction indicator on the driver display is always refreshed when the vehicle is level with the traffic sign.

If you are driving on German motorways with no speed limit, the system uses the speed stored for a stretch of road with no speed limit as the set speed. If you do not alter the stored speed on a stretch of road with no speed limit, the recommended speed of 130 km/h is adopted.

If Active Distance Assist DISTRONIC has been put into passive mode by pressing the accelerator pedal, only speed limits which are higher than the set speed are adopted.

The maximum permissible speed does not consider the road condition and current weather and traffic conditions. Adjust your speed accordingly when necessary.

Observe the notes on driving systems and your responsibility; you may otherwise fail to recognise potential dangers (→ page 302).

System limits

The system limits of Traffic Sign Assist apply to the detection of traffic signs (→ page 338).

Speed limits below 20 km/h are not automatically adopted by the system as the stored speed. Temporary speed restrictions (e.g.for a specific time or due to weather conditions) cannot be unequivocally detected by the system.

Adjust the speed in these situations.

⚠ **WARNING** Risk of accident due to adjustment of speed by the Active Speed Limit Assistant

The speed adopted by the Active Speed Limit Assistant may be too high or incorrect in individual cases:

- For speed limits below 20 km/h
- In wet or foggy conditions

▶ Ensure that the speed driven always complies with the traffic regulations.

▶ Adjust the speed driven to the current traffic and weather conditions.

You can watch an animation on this topic via the following link:

Function of route-based speed adaptation

When Active Distance Assist DISTRONIC is activated, the vehicle speed will be adapted to the route events ahead. Depending on the drive program selected, the vehicle negotiates a route event ahead in an energy-saving, comfortable or dynamic manner. When the route event has been passed, the vehicle accelerates again to the stored speed. The set distance to the vehicle in front, vehicles detected ahead and speed restrictions ahead are taken into account.

Route-based speed adaptation can be activated in the multimedia system (→ page 326).

The following route events are taken into account:

- Bends
- Roundabouts
- T-junctions
- Turns and exits

Also, the speed is reduced if the turn signal indicator is switched on and one of the following situations is detected:

- Turning off at junctions
- Driving on slowing-down lanes
- Driving on lanes adjacent to slowing-down lanes

The driver is responsible for choosing the right speed and observing other road users. This applies in particular to junctions, roundabouts and

traffic lights, as route-based speed adaptation does not brake the vehicle to a standstill.

When route guidance is active, the first speed adjustment is carried out automatically. If the turn signal indicator is switched on, the selected route is confirmed and further speed adaptation is activated.

Speed adaptation is cancelled in the following cases:

- If the turn signal indicator is switched off before the route event and it is presumed that the route event is not deemed relevant by the driver
- If the driver depresses the accelerator or brake pedal during the process.

System limits

Route-based speed adaptation does not take right of way regulations into account. The driver is responsible for complying with road traffic regulations and driving at a suitable speed.

In difficult conditions, the speed selection made by the system may not always be suitable. This applies to the following situations, for example:

- The road's course is not clearly visible
- Road narrowing
- Varying maximum permissible speeds in individual lanes, for example, at toll stations
- Wet road surfaces, snow or ice
- If transport equipment, for example a trailer or bicycle rack, is attached to the trailer hitch and the electrical connection has been correctly established

In these situations the driver must intervene accordingly.

WARNING Risk of accident in spite of route-based speed adaptation

Route-based speed adaptation can malfunction or be temporarily unavailable in the following situations:

- If the driver does not follow the calculated route
- If map data is not up-to-date or available
- In the event of roadworks
- In bad weather or road conditions
- If the accelerator pedal is depressed
- In the event of electronically displayed speed limitations

▶ Adapt the speed to the traffic situation.

Setting Active Distance Assist DISTRONIC driving styles

Requirements

- Active Distance Assist DISTRONIC is activated.

Multimedia system:

→ [⌂] ▸▸ Settings ▸▸ Assistance ▸▸ Driving ▸▸ Active Distance Assist

Setting speed adjustment

▶ Select Adopt speed limit or Route-based speed adjustment.
When these functions are active, the vehicle speed will be adapted to a speed restriction or a route event ahead.

ⓘ If one of the following systems is activated, the detected speed can be manually adopted as the maximum permissible speed:

- Active Distance Assist DISTRONIC
- Variable limiter

ⓘ Further information on Speed Adjustment (→ page 325).

Active Steering Assist

Function of Active Steering Assist

Active Steering Assist is only available up to a speed of 160 km/h. The system helps you to stay in the centre of the lane by means of moderate steering interventions. Depending on the speed driven, Active Steering Assist uses the vehicles ahead and lane markings as a reference.

ⓘ Depending on the country, in the lower speed range Active Steering Assist can use the surrounding traffic as a reference. Active Steering Assist can also assist when driving outside the centre of the lane, forexample, to form an emergency corridor.

If the detection of lane markings and vehicles ahead is impaired, Active Steering Assist switches to passive mode. The system provides no support in this case.

Status display of Active Steering Assist

[⚙] **Grey:** activated and passive

[⚙] **Green:** activated and active

[⚙] **Red:** system limits detected

[⚙] **White, red hands:** "hands on the steering wheel" prompt

ⓘ During the transition from active to passive mode, the [⚙] symbol is shown as enlarged and flashing. Once the system is in passive mode, the [⚙] symbol is shown as grey in the driver display.

ⓘ Depending on the selected vehicle settings, Active Steering Assist may be unavailable.

Steering and touch detection

The driver is required to keep their hands on the steering wheel at all times and be able to intervene at any time to correct the course of the vehicle and keep it in lane. The driver must expect a change from active to passive mode or vice versa at any time.

If the system detects that the driver has not steered the vehicle for a considerable period of time or has removed their hands from the steering

wheel, display ① appears. If the driver still does not steer the vehicle, a warning tone sounds in addition to the visual warning message.

If the driver does not react to this warning for a considerable period, an emergency stop is initiated (→ page 329).

The warning is not issued or stops as soon as the system detects the driver touching or steering the steering wheel.

The touch detection may be limited or inoperative if there is no direct contact between the hand and the steering wheel, e.g. when wearing gloves or if there is a steering wheel cover on the steering wheel.

If Active Steering Assist detects that a system limit has been reached, a visual warning is issued and a warning tone sounds.

Observe the notes on driving systems and your responsibility; you may otherwise fail to recognise potential dangers (→ page 302).

System limits

Active Steering Assist has a limited steering torque for lateral guidance. In some cases, the steering intervention is not sufficient to keep the vehicle in the lane or to drive through exits.

The system may be impaired or inoperative in the following instances:

- There is poor visibility, e.g. due to snow, rain, fog, heavy spray, greatly varying light conditions or strong shadows on the carriageway.
- There is glare, e.g. from oncoming traffic, direct sunlight or reflections.
- Insufficient road illumination.
- The windscreen is dirty, misted up, damaged or covered in the vicinity of the camera, e.g. by a sticker.
- There are no lane markings in a given lane, or the markings are not easily discernible or change quickly, forexample, in a construction area or junctions.
- The lane markings are worn away, dark or covered up, e.g. by dirt or snow.
- If the distance to the vehicle in front is too short and the lane markings cannot therefore be detected.
- The roadway is narrow and winding.
- There are obstacles on the lane or projecting out into the lane, suchas object markers.
- If transport equipment, forexample a trailer or bicycle rack, is attached to the trailer hitch and the electrical connection has been correctly established.

The system does not provide assistance in the following conditions:

- On tight bends and when turning.
- When crossing junctions.
- At roundabouts or toll stations.
- When the tyre pressure is too low.

⚠ **WARNING** Risk of accident if Active Steering Assist unexpectedly stops functioning

If the system limits of Active Steering Assist are reached there is no guarantee that the system will remain active or will keep the vehicle in lane.

▶ Always keep your hands on the steering wheel and observe the traffic carefully.

▶ Always steer the vehicle paying attention to traffic conditions.

⚠ **WARNING** Risk of accident if Active Steering Assist unexpectedly intervenes

The detection of lane markings and objects may malfunction and cause unexpected steering interventions.

▶ Steer according to traffic conditions.

You can watch an animation on this topic via the following link:

Activating/deactivating Active Steering Assist

Requirements

- ESP® is activated, but is not intervening.
- Active Distance Assist DISTRONIC is activated.

Multimedia system:

→ [⌂] ▸▸ Settings ▸▸ Assistance ▸▸ Driving

▶ Activate or deactivate Active Steering Assist.

Function of Active Emergency Stop Assist

ⓘ The following function is only available in combination with the Driving Assistance Package.

Active Emergency Stop Assist monitors the steering wheel, accelerator, and brake pedals. If the system detects a lack of driver activity and the vehicle is in danger of leaving the lane, a warning can be issued and an emergency stop initiated.

If Active Steering Assist is switched off, the system is available from a speed of approx. 60 km/h.

If the system detects that the vehicle is in danger of leaving the lane, a warning can be issued and an emergency stop initiated.

- The driver has not touched the steering wheel for a certain while, or no steering movement is detected for a lengthy period (depending on the vehicle equipment).
- Neither the accelerator nor the brake pedal is depressed.

ⓘ If Active Steering Assist is switched on and active, the system only monitors the steering wheel. If the driver has not touched the steering wheel for a certain while, a warning may be issued despite pedal actuation. Observe also the instructions on the touch detection of Active Steering Assist (→ page 327).

Active Emergency Stop Assist issues the following warnings in order:

- Display message ① appears in the driver display.
- In addition to display ①, a warning tone sounds.
- The Beginning emergency stop message appears in the driver display, a continuous

warning tone sounds and the vehicle will no longer accelerate.
- The vehicle speed is reduced in increments until the vehicle comes to a standstill. Sharp brake impulses are also effected.

When automatic braking is initiated, Active Distance Assist DISTRONIC is deactivated. Depending on the respective country, the hazard warning light system is switched on.

When the vehicle has come to a standstill:

- the vehicle is secured with the electric parking brake.
- the vehicle is unlocked.
- if possible, an emergency call is made to the Mercedes-Benz emergency call centre.

Before the Beginning emergency stop message is displayed, you can cancel Active Emergency Stop Assist by turning the steering wheel.

Once the Beginning emergency stop message has been displayed, you can cancel Active Emergency Stop Assist as follows:

- Accelerating or braking: the emergency stop is cancelled, but the warning message, warning tone and electric power steering remain active
- Steering: electric power steering is cancelled, the warning message and warning tone remain active, and the vehicle continues to be braked
- Accelerating or braking: the emergency stop and electric power steering are cancelled. The warning message and warning tone are cancelled.

ⓘ Active Emergency Stop Assist can initiate an emergency stop a maximum of three times within a driving cycle. After that, Active Steering Assist and Active Emergency Stop Assist are disabled until the vehicle has been restarted.

System limits

For the detection of vehicles and other obstacles, observe the system limits of the following functions:

- Active Distance Assist DISTRONIC (→ page 318)
- Active Steering Assist (→ page 327)
- Active Lane Keeping Assist (→ page 345)
- Active Brake Assist (→ page 330)

Active Emergency Stop Assist is inactive in the following case:

- Active Lane Keeping Assist and Active Steering Assist are switched off.

Active Brake Assist

Function of Active Brake Assist

Active Brake Assist consists of the following functions:

- Distance warning function
- Collision warning

- Autonomous braking function
- Situation-related brake force boosting
- **Vehicles Driving Assistance Package:** Evasive Steering Assist

Active Brake Assist can help you to minimise the risk of a collision with vehicles, cyclists or pedestrians, or to reduce the effects of such a collision.

If Active Brake Assist has detected a risk of collision, a warning tone sounds and the Active Brake Assist lamp [ ] lights up.

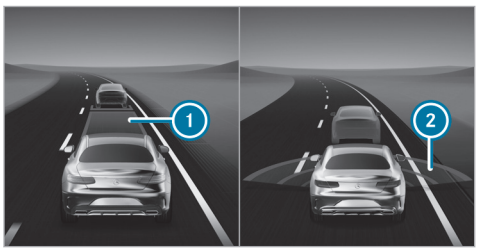

Display in the driver's display in the Assistance menu

In the Assistance menu, an insufficient distance to the vehicle in front (1) is displayed in red. If you further reduce the distance, the vehicle in front is also highlighted in red. When the system detects a risk of collision, red radar waves (2) appear ahead of the vehicle.

ⓘ **Vehicles with PRE-SAFE®:** depending on the country, an additional haptic warning occurs in the form of slight, repeated tensioning of the seat belt.

If you do not react to the warning, autonomous braking can be initiated in critical situations.

In particularly critical situations, Active Brake Assist can also initiate autonomous braking directly. In this case, the warning tone and distance warning lamp [ ] are simultaneous with the braking action.

If you apply the brakes yourself in a critical situation or apply the brakes during autonomous braking, situation-related braking assistance is given. The brake pressure increases up to emergency braking level if necessary.

If autonomous braking, situation-related braking assistance or evasive action has occurred, pop-up (1) appears in the driver's display. It automatically disappears after a short time.

If the autonomous braking function or the situation-related braking assistance is triggered, additional preventive measures by PRE-SAFE® occupant protection may also be initiated.

⚠ **WARNING** Risk of an accident caused by limited detection performance of Active Brake Assist

Active Brake Assist cannot always clearly identify objects and complex traffic situations.

In such cases, Active Brake Assist might:

- Give a warning or brake without reason
- Not give a warning or not brake

Active Brake Assist is only an aid. The driver is responsible for maintaining a sufficiently safe distance to the vehicle in front, vehicle speed and for braking in good time.

▶ Always pay careful attention to the traffic situation; do not rely on Active Brake Assist alone.

▶ Be prepared to brake or swerve if necessary.

If Active Brake Assist is deactivated or the functions are restricted, e.g. owing to activation of another driving system, the Active Brake Assist OFF warning lamp appears in the driver's display.

If the system is unavailable owing to soiled or damaged sensors or a fault, or if the functions are restricted, the Active Brake Assist warning lamp appears in the driver's display.

Also observe the system limits of Active Brake Assist.

Distance warning function

From approximately 30 km/h, the distance warning function warns you if for several seconds, the distance to the vehicle ahead is insufficient at the current speed. In this case, the distance warning lamp in the driver's display lights up. If the distance to the vehicle ahead continues to decrease at higher speeds, the distance warning lamp begins to flash.

Collision warning

The collision warning can assist you in the following situations with an intermittent warning tone and warning lamp :

- when approaching vehicles ahead at speeds up to approximately 250 km/h
- when approaching stationary vehicles, pedestrians walking longitudinally and cyclists ahead at speeds up to approximately 80 km/h
- when approaching crossing pedestrians and cyclists at speeds up to approximately 70 km/h
- when approaching stationary pedestrians and cyclists at speeds up to approximately 60 km/h

Autonomous braking function

At speeds above approximately 7 km/h, the autonomous braking function can intervene in the following situations:

- when approaching vehicles ahead at speeds up to approximately 250 km/h
- when approaching moving cyclists ahead, pedestrians walking longitudinally and stationary vehicles at speeds up to approximately 80 km/h
- when approaching crossing pedestrians and cyclists at speeds up to approximately 70 km/h

Situation-related brake force boosting

At speeds above approximately 7 km/h, situation-related brake force boosting can intervene in the following situations.

- when approaching vehicles ahead at speeds up to approximately 250 km/h

- when approaching moving cyclists ahead, pedestrians walking longitudinally and stationary vehicles at speeds up to approximately 80 km/h
- when approaching crossing pedestrians and cyclists at speeds up to approximately 70 km/h
- when approaching stationary pedestrians and cyclists at speeds up to approximately 60 km/h

Cancelling a braking intervention by Active Brake Assist

You can cancel a braking intervention by Active Brake Assist at any time by:

- firmly depressing the accelerator pedal or by kickdown
- releasing the brake pedal.

Active Brake Assist can cancel the braking intervention if one of the following conditions is fulfilled:

- You are avoiding an obstacle by steering action.
- There is no longer a risk of collision.
- An obstacle is no longer detected ahead of your vehicle.

Turning manoeuvre function (vehicles with Driving Assistance Package):
If a danger of collision with an oncoming vehicle or two-wheeler is detected when turning across an oncoming lane, autonomous braking can be initiated at speeds below 15 km/h before you have left your own lane.

You can watch an animation on this topic via the following link:

Active Evasive Steering Assist

⚠ **WARNING** Risk of accident despite Active Evasive Steering Assist

Active Evasive Steering Assist cannot always clearly identify objects and complex traffic situations.

In such cases, Active Evasive Steering Assist might:

- issue an unfounded warning or initiate a steering intervention
- not issue a warning or not initiate a steering intervention.

The Active Evasive Steering Assist can provide support in preventing a collision via an automatically initiated steering intervention.

▶ Always pay careful attention to the traffic situation; do not rely on Active Evasive Steering Assist alone.

▶ Be prepared to brake or swerve if necessary.

▶ Drive with adjusted speed if pedestrians are in the area surrounding the road.

Active Evasive Steering Assist can automatically react to objects that are stationary or moving longitudinally in your lane.

Active Evasive Steering Assist has the following characteristics:

- detection of pedestrians, cyclists and vehicles.
- assistance by autonomous steering intervention during a necessary evasive manoeuvre
- autonomous activation if there is sufficient space in your own lane
- Reaction from a speed of approximately 30 km/h up to a speed of approximately 80 km/h.

When Active Evasive Steering Assist is intervening, and for the duration of the evasive action, a warning tone is sounded and the distance warning lamp flashes.

The steering assistance by Active Evasive Steering Assist can be cancelled at any time by steering, accelerating or braking.

Active Evasive Steering Assist can intervene in the following speed ranges:

- when approaching stationary vehicles, pedestrians or cyclists at speeds from approximately 30 km/h to approximately 80 km/h
- when approaching pedestrians or cyclists moving longitudinally ahead at speeds from approximately 30 km/h to approximately 80 km/h

System limits

Full system performance is not yet available for a short time after switching on the vehicle or after driving off. Depending on the environmental conditions, it may take a few minutes before full system performance is available.

The system may be impaired or may not function, especially in the following situations:

- in snow, rain, fog, heavy spray, glare, in direct sunlight or in varying light conditions.
- if the sensors are soiled, misted up, damaged or covered.
- if the sensors are impaired owing to interference from other radar sources, e.g. strong radar reflections in multi-storey car parks.
- if a loss of tyre pressure or a defective tyre has been detected and displayed.
- in complex traffic situations where objects cannot always be clearly identified.
- if pedestrians or vehicles move quickly into the sensor detection range.
- if pedestrians are hidden by other objects.
- if the typical outline of a pedestrian cannot be distinguished from the background.
- if a pedestrian is not detected as such, e.g. owing to special clothing or other objects.
- if there is no lane marking, or it is not clearly recognisable
- if the course of the road is not almost straight
- on bends with a tight radius.
- if the driver's seat belt is not fastened.
- if a trailer or bicycle rack has been attached

Setting Active Brake Assist

Requirements

- The vehicle is switched on.

Multimedia system:

→ ⌂ ▸▸ Settings ▸▸ Assistance ▸▸ Collision avoidance

▶ Activate or deactivate the function.

ⓘ It is recommended that you always leave Active Brake Assist activated.

When switching off the Active Brake Assist the distance warning function, the collision warning, the autonomous braking function and the Active Evasive Assist (with Driving Assistance Package) are switched off.

ⓘ If Active Brake Assist is deactivated, the symbol appears in the status bar of the driver display and when the vehicle is next started the system is activated again.

Setting warning timing

▶ Select alongside Active Brake Assist.

▶ Select Early, Medium or Late.

ⓘ If the ATTENTION ASSIST has detected signs of fatigue or a microsleep, depending on the country the system can warn earlier than set. Further information about ATTENTION ASSIST (→ page 315).

Speed Limit Assist

Function of Speed Limit Assist

ⓘ This function is an on-demand feature (→ page 79).

ⓘ The Speed Limit Assist uses Open Street Map data provided under the Open Database Licence (ODbL) terms. For more information, see: https://www.osmfoundation.org/wiki/licence.

Speed Limit Assist detects speed limits with the multifunction camera and displays them in the driver display and optionally in the head-up display. The camera also detects speed limits with a restriction indicated by an additional sign (e.g. in wet conditions).

Observe the notes on driving systems and your responsibility; you may otherwise fail to recognise potential dangers (→ page 302).

Notes on trailer operation

ⓘ Observe also the notes on trailer operation (→ page 371).

If a trailer or bicycle rack is connected correctly, the central display shows the query about the type of trailer and its maximum permissible speed (→ page 376).

The driver must manually adjust the maximum permissible speed in the small or large trailer category.

In particular, the country-specific laws must be taken into account, e.g. on:

- maximum design speed or maximum permissible speed for which the vehicle is approved
- permissible gross mass with or without towing vehicle
- required number of years with a corresponding driving licence
- type and condition of the road used
- the weather conditions

The maximum permissible speed adapted to the vehicle/trailer combination can be transferred to the manual or automatic speed transfer during the journey (depending on the equipment).

On the system side, relevant additional signs for speed limits and clear road category traffic rules can be considered for the vehicle combination (depending on the country).

No maximum permissible speed can be selected for a bicycle rack in the multimedia system. When using a bicycle rack, observe the specifications for the maximum permissible speed in the manufacturer's manual.

Observe also the following information:

- select a speed adapted to the traffic, surroundings and weather conditions
- observe actual traffic signs
- observe applicable traffic rules and regulations

Observe the notes on driving systems and your responsibility; you may otherwise fail to recognise potential dangers (→ page 302).

Warning when the maximum permissible speed is exceeded

The system can warn you if you unintentionally exceed the maximum permissible speed. Depending on the country, you can set how much the maximum permissible speed may be exceeded on the multimedia system before a warning is issued. You can select in the settings whether the warning should be issued optically, with the traffic sign flashing in the driver display, or a combination of optic and acoustic warning. Selection of the type of warning is confirmed country-specifically by an indication in the driver display.

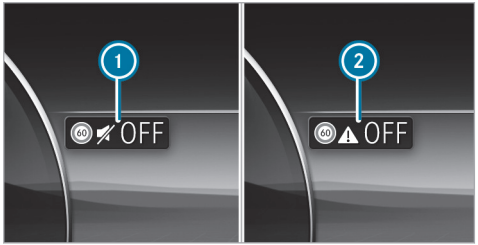

1. Optical warning only
2. WARNING off

ⓘ The type, duration and activation threshold of the speed limit warning, as well as the option of setting the timing of the activation threshold upon which the warning is issued, are subject to legislation valid for the respective country in which the vehicle is delivered.

Displays on the driver display

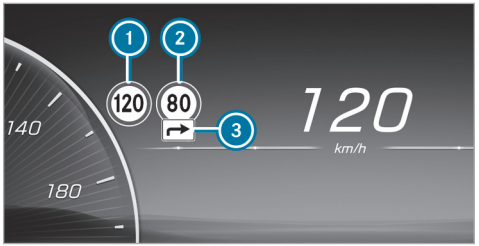

1. Permissible speed
2. Permissible speed with restriction
3. Additional sign with restriction

ⓘ Traffic signs that affect the maximum permissible speed, e.g. indicating the beginning or end of motorways can also be detected.

The system can show up to two traffic signs on the driver display simultaneously. The system always prioritises displaying speed limits. The head-up display shows only one maximum permis-

sible speed traffic sign at a time. If two speed signs are shown on the driver display, when speed limits are detected, forexample, the value of the left-hand speed limit ① is transmitted to the limiter, cruise control or Active Distance Assist DISTRONIC for acceptance and is shown on the head-up display.

Important information from other systems can cause traffic signs to be hidden for a short time.

If the Speed Limit Assist cannot determine the current maximum permissible speed, e.g.due to a lack of signage, the following display appears in the driver display:

This display is permanent if the vehicle is in a country where Speed Limit Assist is not supported. Speed Limit Assist is not available in all countries.

If the system is temporarily or permanently unavailable due to a technical fault or soiling of the windscreen, a corresponding display message appears in the driver display. Depending on the country, the Speed Limit Assist warning lamp [OFF] also lights up in the driver display.

ⓘ Please also note the information on display messages (→ page 755).

System limits

The system may be impaired or inoperative in the following situations in particular:

- If visibility is poor, e.g. due to insufficient illumination of the road, highly variable shade conditions, rain, snow, fog, swirling dust or heavy spray.
- If there is glare, e.g. from oncoming traffic, direct sunlight or reflections.
- If there is dirt on the windscreen in the vicinity of the multifunction camera or if the camera is misted up, damaged or obscured.
- If the traffic signs are difficult to see because, forexample, they are dirty, obscured, faded, iced over, damaged, inconveniently positioned, insufficiently illuminated or askew.
- Active traffic signs with LED displays may not be detected correctly, or even at all due to technical factors, suchas transmission frequency.
- If the signs, road markings or road layout are ambiguous, e.g. in the case of traffic signs at road works, at exits and on-ramps, in the case of adjacent lanes or parallel roads, in the case of pedestrian crossing markings at traffic lights.
- If the signage or road markings do not comply with the standard.
- If the signage, road markings, or road guidance is country-specific and deviates from the navigation system's route guidance, e.g. at or after road works.
- After sharp turns and tight bends, if traffic signs are outside the camera's field of vision.
- If you overtake vehicles with traffic signs affixed or attached to them.
- If transport devices are used that are attached to the trailer coupling, e.g. bicycle racks, the system may react to restrictions for trailers.

Setting Speed Limit Assist

Multimedia system:

→ [⌂] ▸▸ Settings ▸▸ Assistance ▸▸ Assistance ▸▸ Speed Limit Assist

Activating or deactivating the speed limit warning

ⓘ The speed limit warning is switched on by default (depending on the country).

▶ Switch off Speed limit warning .
Following country-specific legislation, the speed limit warning remains deactivated until the next time the vehicle is switched on or off.

ⓘ The audible speed limit warning can also be switched off and on via quick-access, by pressing and holding the mute button on the steering wheel, by pressing the speed icon in the status line of the media display or via a voice control command (availability of functions depending on respective country).

Change the type of speed limit warning

▶ Change the warning to Visual or Visual & audible.

Switching the acoustic signal for a new maximum permissible speed on or off

ⓘ The acoustic signal for a new maximum permissible speed is switched off at the factory.

The function determines whether a subtle, non-intrusive sound supports each change of the displayed speed in the driver display.

▶ Activate or deactivate the function.

ⓘ Availability of the function is dependent on the country.

Setting the warning threshold

This value determines the speed at which a warning is issued when exceeded.

▶ Set the desired speed under warning threshold.

The availability of the function is subject to country-specific legislation.

If one of the following systems is activated, the detected speed can be manually adopted as the maximum permissible speed:

- Active Distance Assist DISTRONIC
- Cruise control
- Variable limiter

ⓘ Further information about Active Distance Assist DISTRONIC (→ page 321).

Traffic Sign Assist

Function of Traffic Sign Assist

ⓘ This function is an on-demand feature (→ page 79).

Traffic Sign Assist detects the traffic signs with the multifunction camera and compares them with the information on the digital road map of the navigation system. It supports you by showing detected speed limits and overtaking bans on the driver display. Maximum permissible speeds can also be shown on the head-up display.

The system can issue a warning when you exceed the maximum permissible speed.

In some countries, the system can provide you with further functions and can warn you when you are approaching pedestrian crossings. If the system detects that you are driving onto a section of

road in the wrong direction of travel, it triggers a warning.

The camera also detects and analyses traffic signs with a restriction indicated by an additional sign (e.g. in wet conditions).

Traffic Sign Assist portrays only selected signs on the driver display. Actual traffic signs and speed limits have priority over traffic signs and speed limits shown on the driver display.

Notes on trailer operation

ⓘ Observe also the notes on trailer operation (→ page 371).

If a trailer or bicycle rack is connected correctly, the central display shows the query about the type of trailer and its maximum permissible speed (→ page 376).

The driver must manually adjust the maximum permissible speed in the small or large trailer category.

In particular, the country-specific laws must be taken into account, e.g. on:

- maximum design speed or maximum permissible speed for which the vehicle is approved
- permissible gross mass with or without towing vehicle
- required number of years with a corresponding driving licence
- Type and condition of the road used
- the weather conditions

The maximum permissible speed adapted to the vehicle/trailer combination can be transferred to the manual or automatic speed transfer during the journey (depending on the equipment).

On the system side, relevant additional signs for speed limits and clear road category traffic rules can be considered for the vehicle combination (depending on the country).

No maximum permissible speed can be selected for a bicycle rack in the multimedia system. When using a bicycle rack, observe the specifications for the maximum permissible speed in the manufacturer's manual.

Observe also the following information:

- select a speed adapted to the traffic, surroundings and weather conditions
- observe actual traffic signs
- observe applicable traffic rules and regulations

Observe the notes on driving systems and your responsibility; you may otherwise fail to recognise potential dangers (→ page 302).

Displays on the driver display

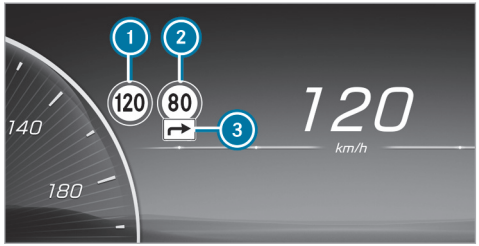

F177 0066 02

1. Permissible speed
2. Permissible speed with restrictions
3. Additional sign with restriction

The system can show up to two traffic signs on the driver display simultaneously. The system always prioritises displaying speed limits. The

head-up display shows only one maximum permissible speed traffic sign at a time. If two speed signs are shown on the driver display, when speed limits are detected, forexample, the value of the left-hand speed limit ① is always transmitted to the limiter, cruise control or Active Distance Assist DISTRONIC for acceptance and is shown on the head-up display.

Important information from other systems can cause traffic signs to be hidden for a short time.

Examples of traffic signs which can be displayed

Traffic Sign Assist can detect and display the following traffic signs ①:

- speed limits
- end of speed limit
- no overtaking zones
- play streets
- depending on the country: signs showing the start or end of motorways and dual carriageways

Traffic Sign Assist can detect the following additional signs ③ and, if necessary, analyse the relevance of the restrictions using other vehicle sensors:

- in wet conditions
- slippery road surfaces
- in fog
- temporary restrictions
- exits
- restrictions for vehicle/trailer combinations

Traffic Sign Assist also uses data from the digital street map on the navigation system. When you leave or enter a municipality or change roads, on a motorway exit or slip road forexample, or after you turn at a junction, the display on the driver display can thus be updated without a traffic sign having been detected.

ⓘ Regularly update the digital road map of the navigation system to ensure optimum functioning of Traffic Sign Assist (→ page 33).

Depending on vehicle equipment and country, the system can also display speed restrictions ahead on the driver display and head-up display. The driver display can also show the distance to an upcoming lower limit speed. Information from the digital road map of the navigation system is used for this purpose. The Assistance menu can also display a dynamic visualisation of the speed limits ahead.

If Traffic Sign Assist cannot determine the currently applicable maximum permissible speed (e.g. due to a lack of signage), the following display appears in the driver display:

Traffic Sign Assist is not available in all countries. This is displayed continuously if the vehicle is in a country where Traffic Sign Assist is not supported.

If Traffic Sign Assist is temporarily or permanently unavailable due to a technical fault or soiling of the windscreen, the Traffic Sign Assist warning lamp appears on the driver display.

ⓘ Please also note the information on the display messages for Traffic Sign Assist (→ page 755).

Warning when the maximum permissible speed is exceeded

The system can warn you if you unintentionally exceed the maximum permissible speed. Depending on the country, you can set how much the maximum permissible speed may be exceeded on the multimedia system before a warning is issued. You can switch off the warning, or select in the settings whether the warning should be issued optically, with the traffic sign flashing in the driver display, or a combination of optic and acoustic warning. The selected setting is confirmed by an indication on the driver display.

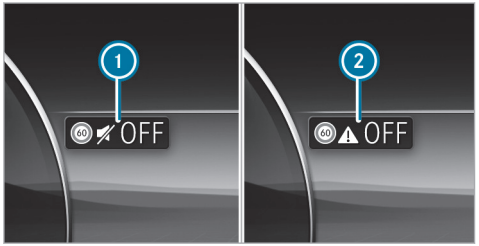

1. Optical warning only
2. WARNING off

ⓘ The type, duration and deployment stages of the speed limit warning, as well as the option of setting the timing of the deployment stages upon which the warning is issued, are subject to legislation valid for the respective country in which the vehicle is delivered.

Additional functions of Traffic Sign Assist (country-specific)

Warning for no-entry signs: Traffic Sign Assist can warn you if you drive the wrong way down a section of road, forexample, on motorway slip roads or one-way streets.

Warning at pedestrian crossings: Traffic Sign Assist can warn you up to a speed of approximately 70 km/h that you are approaching a pedestrian crossing, wherever pedestrians are present in the danger zone or are moving towards it.

System limits

The system may be impaired or inoperative in the following situations in particular:

- If visibility is poor, e.g. due to insufficient illumination of the road, highly variable shade conditions, rain, snow, fog, swirling dust or heavy spray.
- If there is glare, e.g. from oncoming traffic, direct sunlight or reflections.

- If there is dirt on the windscreen in the vicinity of the multifunction camera or if the camera is misted up, damaged or obscured.
- If the traffic signs are difficult to see because, forexample, they are dirty, obscured, faded, iced over, damaged, inconveniently positioned, insufficiently illuminated or askew.
- Active traffic signs with LED displays may not be detected correctly, or even at all due to technical factors, suchas transmission frequency.
- If the information on the navigation system's digital map is incorrect, incomplete or out of date.
- If the signs, road markings or road layout are ambiguous, e.g. in the case of traffic signs at road works, at exits and on-ramps, in the case of adjacent lanes or parallel roads, in the case of pedestrian crossing markings at traffic lights.
- If the signage or road markings do not comply with the standard.
- If the signage, road markings, or road guidance is country-specific and deviates from the navigation system's route guidance, e.g. at or after road works.
- After sharp turns and tight bends, if traffic signs are outside the camera's field of vision.
- If you overtake vehicles with traffic signs affixed or attached to them.
- If you use transport equipment secured to the vehicle with a trailer coupling, suchas a bicycle rack, restrictions for vehicle/trailer combinations may be considered valid as applicable.

Setting Traffic Sign Assist

Multimedia system:

→ [⌂] ▸▸ Settings ▸▸ Assistance ▸▸ Assistance ▸▸ Traffic Sign Assist

Activating or deactivating the speed limit warning

ⓘ The speed limit warning is switched on by default (depending on the country).

▶ Switch off Speed limit warning .
Following country-specific legislation, the speed limit warning remains deactivated until the next time the vehicle is switched on or off.

ⓘ The audible speed limit warning can also be switched off and on via quick-access, by pressing and holding the mute button on the steering wheel, by pressing the speed icon in the status line of the media display or via a voice control command (availability of functions depending on respective country).

Change the type of speed limit warning

▶ Change the warning to Visual or Visual & audible.

Setting the warning threshold

This value determines the speed at which a warning is issued when exceeded.

▶ Set the desired speed under warning threshold.

ⓘ Availability of the function is subject to country-specific legislation.

Switching the acoustic signal for a new maximum permissible speed on or off

ⓘ The acoustic signal for a new maximum permissible speed is switched off at the factory.

The function determines whether a subtle, non-intrusive sound supports each change of the displayed speed in the driver display.

▶ Activate or deactivate the function.

ⓘ Availability of the function is dependent on the country.

Traffic light view

Information about the traffic light view

The traffic light view supports the driver when waiting in front of a red light by displaying the camera image on the central display. The camera image is displayed when the driver is the first vehicle in front of the red light and faded out when the vehicle drives off.

Displaying traffic light view

Requirements:

- The Traffic light view option is switched on.
- A traffic light view is available.

Multimedia system:

→ [⌂] ▸▸ Settings ▸▸ Assistance ▸▸ Assistance ▸▸ Traffic light view

ⓘ This function is not available in all countries.

If the vehicle is in first position at a traffic light, the camera image with traffic light view is shown on the central display.

When the vehicle pulls away, the camera image is faded out.

▶ Activate [●] or deactivate [○] Traffic light view.

Using other available functions

▶ Select [⚙].

▶ Select On request or Automatic.
If On request is set and a traffic light view is available, the Please tap here for traffic light view. message is displayed. The camera image is shown after confirmation of the message.

When Automatic is set, the camera image is automatically displayed when the traffic light view is available.

Blind Spot Assist

Function of Blind Spot Assist with exit warning

Blind Spot Assist uses two lateral, rear-facing radar sensors to monitor the area up to 40 m behind and 3 m next to your vehicle.

If at speeds above approximately 12 km/h a vehicle is detected and this vehicle subsequently enters the monitoring range directly next to your vehicle, the warning lamp in the outside mirror lights up red.

Status display in the driver's display

[icon] **Grey:** the system is activated but inoperative.

[icon] **Green:** the system is activated and operational.

If a vehicle is detected close to your vehicle and you actuate the turn signal indicator in its direction, a double warning tone sounds and the red warning lamp in the outside mirror flashes. If the turn signal indicator remains switched on, all other detected vehicles are indicated only by the flashing of the red warning lamp.

If you overtake a vehicle quickly, no warning is given.

WARNING Risk of accident despite Blind Spot Assist

Blind Spot Assist does not react to vehicles approaching and overtaking you at a greatly different speed.

Blind Spot Assist cannot warn drivers in this situation.

▶ Always pay careful attention to the traffic situation and maintain a safe distance at the side of the vehicle.

Observe the notes on driving systems and your responsibility; you may otherwise fail to recognise dangers (→ page 302).

Exit warning

The exit warning is an additional function of Blind Spot Assist and can warn vehicle occupants about approaching vehicles when leaving the vehicle when stationary.

WARNING Risk of accident despite exit warning

The exit warning neither reacts to stationary objects nor to persons or road users approaching you at a greatly differing speed.

The exit warning cannot warn drivers in these situations.

▶ Always pay particular attention to the traffic situation when opening the doors and make sure there is sufficient clearance.

If there is a vehicle in the monitoring range, this is indicated in the outside mirror. If a vehicle occupant opens the door on the side with the warning, a warning tone sounds and the warning lamp in the outside mirror starts to flash.

This additional function is only available when Blind Spot Assist is active. When the exit warning is activated, it can warn vehicle occupants for up to three minutes after switching the vehicle off. The exit warning is no longer available once the warning lamp in the outside mirror flashes three times.

The exit warning is only an aid and not a substitute for the attention of vehicle occupants. The responsibility for opening and closing the doors and for leaving the vehicle remains with the vehicle occupants.

System limits

Blind Spot Assist may be restricted in the following situations, in particular:

- if there is dirt on the sensors or the sensors are obscured
- in poor visibility, e.g. due to fog, heavy rain or snow
- if there are narrow vehicles, e.g. bicycles or motorbikes
- if the road has very wide or narrow lanes
- if vehicles are not driving in the middle of their lane

Warnings may be issued in error when driving close to crash barriers or similar continuous lane borders. Always make sure that there is sufficient distance to the side for other traffic or obstacles.

Warnings may be interrupted when driving alongside long vehicles, for example lorries, for a prolonged time.

Blind Spot Assist is not operational when reverse gear is engaged.

Blind Spot Assist and the exit warning are not operational when a trailer is coupled to the vehicle and the electrical connection has been correctly established.

The exit warning may be limited in the following situations:

- when the sensors are covered by adjacent vehicles in narrow parking spaces
- when people approach the vehicle
- in the event of stationary or slowly moving objects

Activating or deactivating Blind Spot Assist

Multimedia system:

→ ⌂ ▸▸ Settings ▸▸ Assistance ▸▸ Collision avoidance

▶ Activate or deactivate Blind Spot Assist.

Active Lane Keeping Assist

Function of Active Lane Keeping Assist

Active Lane Keeping Assist monitors the area in front of your vehicle by means of a multifunction camera, (→ page 303) and can protect you from leaving your lane unintentionally. The system can guide you back into your lane by course-correcting steering intervention, and warn you with tangible steering wheel feedback.

Active Lane Keeping Assist is available in the speed range between 60 km/h and 200 km/h.

The system can intervene if the following conditions are met:

- Active Lane Keeping Assist detects a lane marking.
- One of your front wheels moves onto this lane marking.

If you activate the direction indicators, there is no steering intervention on that side.

There is no steering intervention if you leave your lane without activating the direction indicators but there is a risk of collision with a moving obstacle in your own lane.

F177 0066 02

Vehicles with Blind Spot Assist or Driving Assistance Package: If the system detects an obstacle, e.g. another vehicle, in the adjacent lane, there is steering intervention despite the direction indicators.

In the following cases a warning ① appears in the driver's display and a warning tone is sounded:

- a steering intervention by Active Lane Keeping Assist has a duration longer than approximately ten seconds.
- there are two or more steering interventions by the systems within approximately three minutes, without steering action by the driver.

You can set the sensitivity of the system in the Active Lane Keeping Assist settings, to determine the level of assistance. You can also determine whether the system is to react to interrupted lane markings, or only to solid lane markings (→ page 347).

Status displays of Active Lane Keeping Assist

White: Active Lane Keeping Assist is switched off.

If ESP® is switched off or a tyre pressure loss warning is given, Active Lane Keeping Assist is automatically switched off.

Yellow: There is a malfunction. Also note any display messages.

Grey: Active Lane Keeping Assist is switched on but not ready.

Green: Active Lane Keeping Assist is switched on and ready.

Red: Active Lane Keeping Assist has guided you back into your lane by course-correcting steering intervention. If a tangible warning is also given at the steering wheel, the status display flashes. Only the lane marking on the warning side is shown in red.

Display in the driver's display in the menu Assistance

If one of your front wheels moves onto a recognised lane marking, this is highlighted in red in the Assistance menu in the driver's display.

System limits

In the following situations, there may be no course-correcting steering intervention but a warning may be given at the steering wheel depending on the situation:

- if you clearly and actively steer, brake or accelerate.
- if a driving safety system is intervening, e.g. ESP® or Active Brake Assist
- if you have adopted a sporty driving style with high cornering speeds or high rates of acceleration.
- if transport equipment such as a trailer or rear bicycle rack is attached to the trailer coupling, and the electrical connection has been established correctly

The system may be impaired or may not function, particularly in the following situations:

- if there is poor visibility, e.g. owing to insufficient road illumination, highly variable shade conditions, rain, snow, fog or heavy spray.

- if there is glare, e.g. from oncoming traffic, direct sunlight or reflections.
- if there is soiling on the windscreen in the vicinity of the multifunction camera, or if the camera is misted up, damaged or obscured.
- if the bumper is soiled in the area of the radar sensors, or if these are damaged or obscured
- if there are no lane markings, or several unclear lane markings are present for one lane, e.g. around roadworks.
- if the lane markings are worn, dark or covered.
- if the distance to the vehicle in front is too short and the lane markings cannot be detected as a result.
- if the lane markings change quickly, e.g. lanes branch off, cross one another or merge.
- if the carriageway is very narrow and winding.

Observe the notes on driving systems and your responsibility; you may otherwise fail to recognise dangers (→ page 302).

You can watch an animation on this topic via the following link:

Activating/deactivating Active Lane Keeping Assist

Multimedia system:

→ [⌂] ▸▸ Settings ▸▸ Assistance ▸▸ Collision avoidance ▸▸ Active Lane Keeping Assist

▶ Activate or deactivate the function.

Alternatively, Active Lane Keeping Assist can be activated and deactivated via the [🚗] quick vehicle access.

ⓘ After starting the vehicle, the settings are country-specific.

Setting Active Lane Keeping Assist

Multimedia system:

→ [⌂] ▸▸ Settings ▸▸ Assistance ▸▸ Collision avoidance ▸▸ Active Lane Keeping Assist

Setting the sensitivity

▶ Select [⚙].

▶ Select Early, Med. or Late.

The last setting selected is automatically adopted when the vehicle is next started.

ⓘ The standard setting for this function is country-dependent.

Activating/deactivating assistance for interrupted lane markings

▶ Select Advanced support.

The last setting selected is automatically adopted when the vehicle is next started.

ⓘ The standard setting for this function is country-dependent.

ⓘ This function must be activated for Emergency Stop Assist to be fully available. Further information about Emergency Stop Assist (→ page 329).

Function of adaptive damping adjustment

Suspension with adaptive damping adjustment continuously adjusts the characteristics of the suspension dampers to the current operating and driving conditions.

The damping is set individually for each wheel and is affected by the following factors:

- the road surface conditions
- vehicle load
- the drive program selected
- the driving style

The drive program can be adjusted using DYNAMIC SELECT.

AMG RIDE CONTROL

Function of AMG RIDE CONTROL

AMG RIDE CONTROL is an electronically controlled damping system for improved driving comfort and increased driving safety.

The damping is adjusted individually to each wheel and depends on the following factors:

- driving style, e.g. sporty
- road condition, e.g. bumps
- The individual selection of **SPORT, SPORT +** or **COMFORT**

The suspension setting depends on the drive program selected.

In addition, you can select the setting in every drive program individually using the AMG steering-wheel button (→ page 348). After a drive program is changed, the automatic suspension setting of the drive program is reactivated.

ⓘ When the vehicle is started again, the **COMFORT** setting is activated automatically.

Selecting the suspension setting

ⓘ You can also adjust the suspension setting via the multimedia system (→ page 256).

You can select from three different suspension settings:

- **COMFORT** ensures a comfortable suspension setting. Select this suspension setting if you prefer a comfortable driving style.
- **SPORT** ensures a firmer suspension setting. Select this suspension setting when employing a sporty driving style, e.g. on winding country roads.
- **SPORT +** ensures a very firm suspension setting.

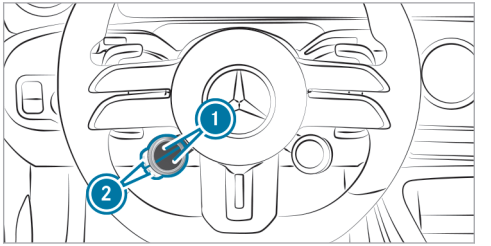

▶ Press the upper or lower ① display button repeatedly, until it displays the [ ] symbol.

ⓘ If the display button does not show the symbol, then it is hidden. How functions are displayed and the order in which they are displayed can be set in the multimedia system (→ page 251).

▶ Press corresponding button ②.
The selected suspension setting is shown in the driver's display as a message.

The [ ] symbol indicates the currently selected mode:

- [ ] (blue): COMFORT

- (yellow): SPORT
- (red): SPORT +

RACE START

Information about RACE START

ⓘ RACE START is available only for Mercedes-AMG vehicles.

RACE START enables optimal vehicle acceleration from a standstill. A suitably high-grip road surface is required for this, and the tyres and vehicle must also be in good condition.

RACE START is only available after the vehicle has been run in.

ⓘ RACE START must not be used in normal road operation. RACE START may be activated and used only on dedicated race circuits, not on public roads.
Read the safety notes and information on ESP® (→ page 306).

⚠ **WARNING** Risk of skidding and having an accident from wheels spinning

If you use RACE START, depending on the ESP® mode selected, there is an increased risk of skidding and having an accident.

▶ Make sure that no persons or obstacles are in the close vicinity of your vehicle.

Activating RACE START

⚠ **WARNING** Risk of skidding and having an accident from wheels spinning

If you use RACE START, depending on the ESP® mode selected, there is an increased risk of skidding and having an accident.

▶ Make sure that no persons or obstacles are in the close vicinity of your vehicle.

Requirements

- The driver's door is closed.
- The engine is running and the transmission and engine are at normal operating temperature.
- The steering wheel is in the straight-ahead position.
- The vehicle is on level ground.
- The vehicle is stationary, the brake pedal is depressed (left foot) and the parking brake is released.
- One of the drive programs S, S+ or is selected (→ page 252).

ⓘ RACE START is available only for Mercedes-AMG vehicles and must not be used during normal road operation. RACE START may be activated and used only on dedicated race circuits, not on public roads.
Read the safety notes and information on ESP® (→ page 306).

▶ Rapidly depress the accelerator pedal fully. The engine speed will increase. The RACE START Release brake to start message will appear on the driver's display.

ⓘ If the brake pedal is not released after a short while, RACE START will be cancelled. The RACE START cancelled message will appear on the driver's display.

▶ Take your foot off the brake, but keep the accelerator pedal depressed.
The vehicle will pull away at maximum acceleration. The RACE START active message will appear on the driver's display.

RACE START will be deactivated immediately if you release the accelerator pedal during RACE START or if any of the activation conditions are no longer fulfilled. The RACE START cancelled message will appear on the driver's display.

ⓘ After using it several times in quick succession, RACE START will be unavailable until a certain distance has been driven.

Reversing camera

Function of the reversing camera

The reversing camera serves solely as an aid. It is not a substitute for you having to pay attention to your surroundings. The responsibility for safe manoeuvring and parking remains with you. Ensure that there are no persons, animals or objects etc., in the manoeuvring area while manoeuvring and parking.

ⓘ The area behind the vehicle is displayed as a mirror image, as it would appear in the inside rearview mirror.

Vehicles without Parking Package

The following camera perspectives are available in the central display:

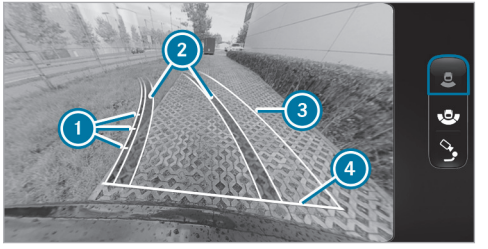

Standard view

1. Guide lines at a distance of approximately 0.5 m, 1.0 m, 1.5 m and 3.0 m from the rear area
2. Lane marking the course the tyres will take with the current steering angle (dynamic)
3. Driven surface depending on the current steering angle (dynamic)
4. Guide line at a distance of approximately 0.3 m from the rear area

Wide-angle view

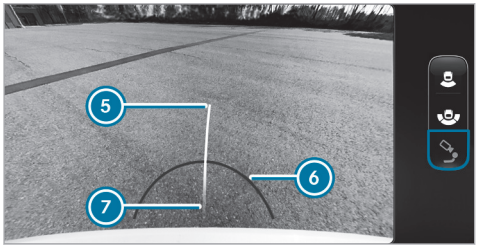

Trailer view

5 Yellow guide line, locating aid

6 Red guide line at a distance of approximately 0.3 m from the ball head of the trailer hitch

7 Ball head of the trailer hitch

Pedestrian braking function

ⓘ This function is only available in vehicles without the Parking Package. Vehicles with the Parking Package are equipped with manoeuvring assistant functions (→ page 368).

The pedestrian braking function can prevent collisions with pedestrians when the vehicle reverses at slow speeds. If the reversing camera detects a person in the vehicle's path, the vehicle can be braked to a standstill.

The pedestrian braking function can intervene under the following conditions:

- The vehicle is reversing at a speed below 15 km/h.
- The camera image is shown on the central display.

When automatic braking is triggered, the symbol appears in red in the camera image.

Additionally, the Pedestrian! Deact. emerg. braking: press here message appears.

The driver can close or ignore this message. Pedestrian braking then remains active. When the driver taps the message, pedestrian braking is momentarily deactivated.

In the following cases, the pedestrian braking function is activated again:

- The vehicle is travelling forward at over 16 km/h.
- The vehicle is switched off and on again.

ⓘ If the function is unavailable or deactivated, the symbol appears in grey in the camera image.

The pedestrian braking function serves solely as an aid. It is not a substitute for you having to pay attention to your surroundings. The responsibility for safe manoeuvring and parking remains with you. Ensure that no persons, animals or objects etc. are in the manoeuvring range.

⚠ **WARNING** Risk of accident caused by limited detection of the pedestrian braking function

The pedestrian braking function cannot always clearly detect people. Other obstacles are not detected by the function.

In these cases, the function may brake unnecessarily or not brake at all.

▶ Always pay careful attention to the traffic situation; do not rely on the pedestrian braking function alone.

▶ Be ready to brake.

In the following situations, the pedestrian braking function is not available:

- On inclines
- If transport equipment, forexample a trailer or bicycle rack, is attached to the trailer hitch and the electrical connection has been correctly established
- If the reversing camera is not operational

Please also note the system limits of the reversing camera.

Vehicles with Parking Package

The following camera perspectives are available in the central display:

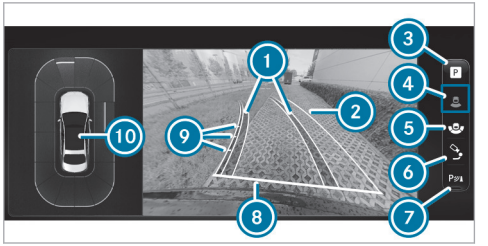

Menu Camera views

1. Lane marking the course the tyres will take with the current steering angle (dynamic)
2. Driven surface depending on the current steering angle (dynamic)
3. Menu Parking Assistance
4. Reversing camera with top view
5. Wide-angle view
6. Trailer view
7. Activating/deactivating Parking Assist PARKTRONIC (→ page 361)
8. Guide line at a distance of approximately 0.3 m from the rear area
9. Guide lines at a distance of approximately 0.5 m, 1.0 m, 1.5 m and 3.0 m from the rear area
10. Warning display of Parking Assist PARKTRONIC (→ page 358)

ⓘ When Active Parking Assist is active, paths 1 are displayed in green (→ page 362).

Wide-angle view

10. Warning display of Parking Assist PARKTRONIC (→ page 358)

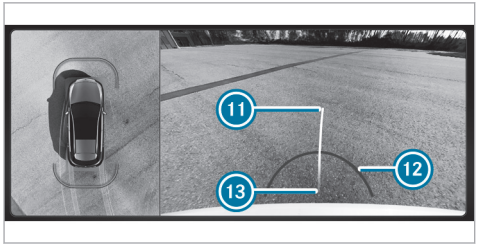

Trailer view

⑪ Yellow guide line, locating aid

⑫ Red guide line at a distance of approximately 0.3 m from the ball head of the trailer hitch

⑬ Ball head of the trailer hitch

System limits

If the system is not ready for operation, the System inoperative message appears on the central display.

The reversing camera will not function; or will only partially function in the following situations:

- You are driving forwards at a speed greater than approximately 16 km/h.
- The boot lid is open.
- The weather conditions are poor, e.g. heavy rain, snow, fog, storm or spray.
- The light conditions are poor, e.g. at night or if a light is shining into the camera.
- The camera lens is obstructed, dirty or misted up. Observe the notes on cleaning the reversing camera (→ page 567).
- The camera or rear of your vehicle is damaged. In this case, have the camera and its position and setting checked at a qualified specialist workshop.

ⓘ Do not use the reversing camera in these types of situations. You could otherwise injure others or collide with objects when parking the vehicle.

The field of vision and other functions of the camera system may be restricted due to additional vehicle attachments (e.g. licence plate bracket or bicycle rack).

ⓘ The contrast of the display may be impaired by direct sunlight or by other light sources, e.g. when driving out of a garage. Particular attention must be afforded in these situations.

ⓘ Have the display repaired or replaced if, forexample, its use is considerably restricted due to pixel errors.

Observe also the information on vehicle sensors and cameras (→ page 303).

360° Camera

Function of the 360° camera

The 360° camera is a system comprising four cameras which cover the immediate surroundings of the vehicle. The cameras support you, forexample, when parking or when exits are difficult to see.

The 360° camera includes the following cameras and evaluates their images:

- Reversing camera
- Front camera
- Two outside mirror cameras

The cameras serve solely as aids and may show a distorted or incorrect perspective of obstacles, or

even not at all. They are not a substitute for you having to pay attention to your surroundings. The responsibility for safe manoeuvring and parking remains with you. Ensure that there are no persons, animals or objects etc., in the manoeuvring area while manoeuvring and parking.

The following camera perspectives are available in the central display:

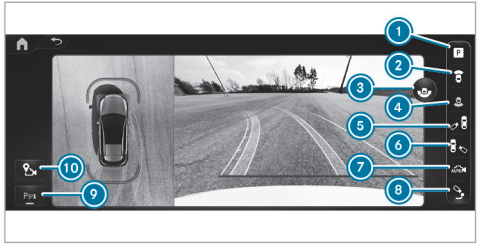

Menu Camera views overview

1. Menu Parking Assistance
2. Top view with image from the front camera
3. Panorama View
4. Top view with image from the reversing camera
5. 3D view left side of the vehicle
6. 3D view right side of the vehicle
7. 3D auto view
8. Trailer View (depending on equipment)
9. Activating/deactivating Parking Assist PARKTRONIC (→ page 361)
10. Set the GPS activation point

ⓘ The warning display of the Parking Assist PARKTRONIC is shown in all views (→ page 358).

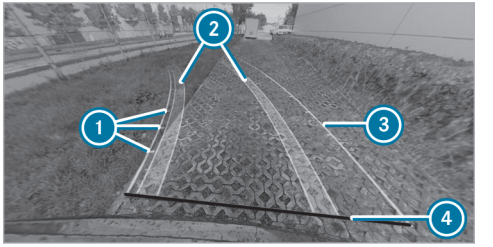

Function of the guide lines

1. Guide lines at a distance of approximately 0.5 m, 1.0 m, 1.5 m and 3.0 m from the rear area
2. Lane marking the course the tyres will take with the current steering angle (dynamic)
3. Driven surface depending on the current steering angle (dynamic)
4. Guide line at a distance of approximately 0.3 m from the rear area

ⓘ When Active Parking Assist is active, lanes and guidelines display green instead of yellow (→ page 362).

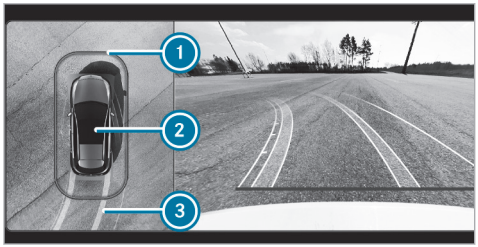

Top view with the image from the front or reversing camera

1. Warning display of Parking Assist PARKTRONIC (→ page 358)
2. Your vehicle from above
3. Lane indicating the route the vehicle will take at the current steering angle

WARNING Risk of accidents due to objects not being displayed or being displayed as heavily distorted

Due to the projection of the cameras, objects in the 3D views may be heavily distorted or not displayed at all.

▶ Ensure that there are no persons, animals or objects in the manoeuvring area while manoeuvring and parking.

NOTE Risk of accident due to objects being severely distorted in the display or not displayed at all

Due to the projection of the cameras, objects in the 3D views may be severely distorted when displayed or not displayed at all.

▶ Make sure that there are no persons, animals or objects etc. in the manoeuvring area while manoeuvring and parking.

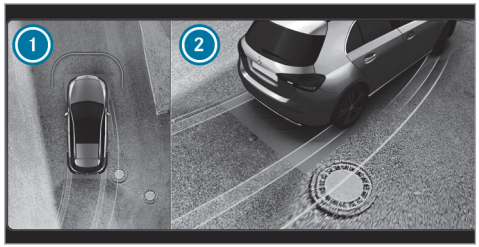

3D view, left/right-hand side of the vehicle

In the 3D view, left/right-hand side of the vehicle, the virtual camera moves to the respective side of the vehicle 2. When you change the transmission position, the view is automatically adapted. In addition, Top View 1 is displayed with the Parking Assist PARKTRONIC warning display.

ⓘ The area behind the vehicle is **not** displayed as a mirror image as is usual in the 3D views.

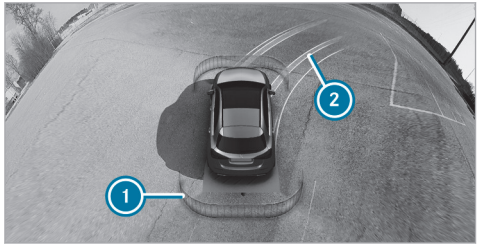

3D auto view

1. Display of Parking Assist PARKTRONIC (→ page 358)
2. Guide lines

In the 3D auto view, the virtual camera moves to the standard perspective, facing forward from the rear above the roof. The view changes automatically when approaching obstacles.

If you tap the touchscreen, the view changes to a 3D view with free rotation. You can turn, tilt and zoom the views by touch.

Wide-angle view

1. Display of Parking Assist PARKTRONIC (→ page 358)
2. Top view with image from the reversing camera
3. Wide-angle view

If the top view with the reversing camera image is displayed, switch to the wide-angle view with the icon 2 indented to the left. When the wide-angle view is displayed, switch back to the respective top view.

If you select the trailer view and no trailer is coupled to the vehicle, the following display appears:

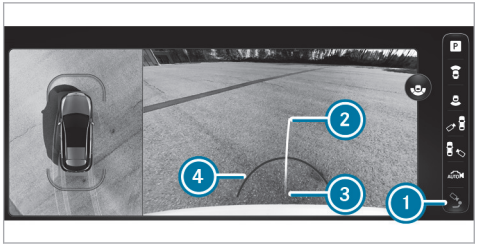

Trailer view

1. To switch between standard and trailer view
2. Yellow guide line, locating aid
3. Ball head of the trailer hitch
4. Red guide line at a distance of approximately 0.3 m from the ball head of the trailer hitch

ⓘ In trailer mode, the guide lines are shown at the level of the trailer hitch.

When the electrical connection is established between the vehicle and the trailer, the display changes to the side camera view.

Side view of outside mirror cameras in trailer view

1 To switch between standard and trailer view

System limits

If the system is not ready for operation, the System inoperative message appears on the central display.

WARNING Risk of accident due to functional limitations of the 360° camera

If the function of the 360° camera is restricted, there is a risk of collision with persons or objects.

- ▶ Do not use the 360° camera in case of functional limitations.
- ▶ Ensure that there are no persons, animals or objects etc., in the manoeuvring area while manoeuvring and parking.

The 360° camera will not function, or will only partially function in the following situations:

- You are driving forwards at a speed greater than approximately 16 km/h.
- The doors are open.
- An outside mirror is not completely extended.
- The boot lid is open.
- The weather conditions are poor, e.g. heavy rain, snow, fog, storm or spray.
- The light conditions are poor, e.g. at night or if a light is shining into the camera.
- The camera lens is obstructed, dirty or misted up. See the notes on cleaning the 360° camera (→ page 567).
- If cameras or vehicle components in which the cameras are fitted are damaged. In this event, have the cameras, their positions and their setting checked at a qualified specialist workshop.

For technical reasons, the standard height of the vehicle may be altered if the vehicle is carrying a heavy load and can result in inaccuracies in the guide lines and in the display of the generated images.

The field of vision and other functions of the camera system may be restricted due to additional vehicle attachments (e.g. licence plate bracket or bicycle rack).

ⓘ The contrast of the display may be impaired by abrupt, direct sunlight or other light sources, e.g. when driving out of a garage. Particular attention must be afforded in these conditions.

ⓘ Have the display repaired or replaced if, forexample, its use is considerably restricted due to pixel errors.

Observe also the information on vehicle sensors and cameras (→ page 303).

Calling up the 360° camera views using the button

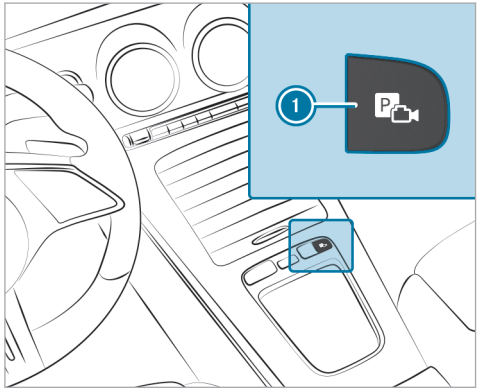

- Press button 1.
- Select Camera views menu.
- Select the desired view in the multimedia system (→ page 353).

Selecting a view for the 360° Camera (reverse gear)

Requirements

- The Activation in R setting is activated in the multimedia system .

- Engage reverse gear.
- Select the desired view in the multimedia system (→ page 353).

Opening the camera cover

Multimedia system:

→ ⌂ ▸▸ Settings ▸▸ Assistance ▸▸ Camera

- Select Open camera cover.

ⓘ The camera cover closes automatically after some time or after the vehicle is switched on or off.

Parking Assist PARKTRONIC

Function of Parking Assist PARKTRONIC

Parking Assist PARKTRONIC is an electronic parking assistance system that monitors the area surrounding your vehicle and visually and audibly shows you the distance between the vehicle and a detected obstacle.

The passive side impact protection also warns you of obstacles to the side. These must be detected beforehand by the sensors in the front or rear bumper while driving past them. If you steer in the direction of a detected obstacle and there is a risk of a lateral collision, a warning is issued.

Passive side impact protection can be activated and deactivated via the multimedia system (→ page 361).

For front or rear obstacles to the side to be displayed, the vehicle must first travel a distance of at least half a vehicle length. Once the vehicle has travelled a distance of one vehicle length, obstacles on all sides can be shown.

Parking Assist PARKTRONIC is only an aid. It is not a substitute for you paying attention to the surroundings. The responsibility for safe manoeuvring and parking remains with you. Make sure that there are no persons, animals or objects in the manoeuvring area while manoeuvring and parking in/exiting parking spaces.

Displays in the central display

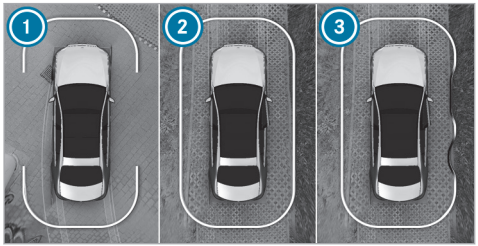

Vehicles with 360° camera

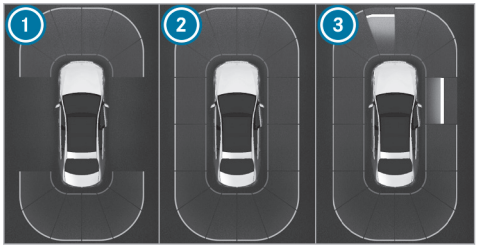

Vehicles with reversing camera

1. Ready for display at the front and rear
2. Ready for display all round
3. All-round display readiness and obstacle detection

As soon as PARKTRONIC Parking Assist is ready for display, the respective areas of the display 1 to 3 are shown in blue.

The colour of the display changes depending on the distance to the detected obstacle:

- **Blue:** > 1 m (no obstacles detected)
- **Yellow:** approximately 1 m - 0.7 m
- **Orange:** approximately 0.7 m - 0.4 m
- **Red:** < 0.4 m

Vehicles with 360° camera: the boundary line shifts dynamically depending on the position and distance of the obstacles detected.

An intermittent warning tone also sounds depending on the distance to the obstacle detected. You can set the timing of the warnings in the multimedia system. In the Warn early setting, the system warns you from a distance of 1 m. In the standard setting, the warning is only from 0.4 m.

Vehicles with 360° camera

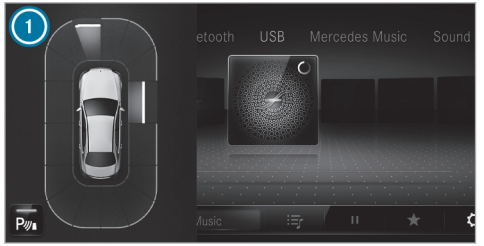

Vehicles with reversing camera

If you are not in the Camera & parking menu and an obstacle in the vehicle path is detected, a pop-up window 1 appears in the central display if the following requirements are met:

- **Vehicles without Active Parking Assist:** when driving no faster than 12 km/h.
- **Vehicles with Active Parking Assist:** when driving no faster than 18 km/h.

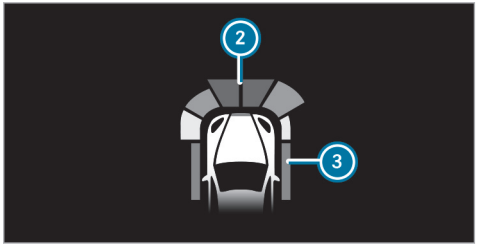

Optionally, obstacles detected by Parking Assist PARKTRONIC from a distance of approximately 1.0 m in front 2 and 0.7 m on the sides 3 can also be displayed in the head-up display.

System limits

Parking Assist PARKTRONIC does not necessarily take into account the following obstacles:

- Obstacles below the detection range, e.g.persons, animals or objects.
- Obstacles above the detection range, e.g.protruding loads, overhangs or loading ramps of lorries.
- Pedestrians or animals approaching the vehicle from the side.
- Objects placed next to the vehicle

Obstacles on the sides are not shown in the following situations, for example:

- You park the vehicle and switch it off.
- You open the doors.

After the engine is restarted, obstacles must be detected again by driving past them before a new warning can be issued.

Also, observe the system limits of the following systems:

- Reversing camera (→ page 350)
- 360° camera (→ page 353)

Observe the information on vehicle sensors and cameras; the system otherwise cannot function properly (→ page 303).

Vehicles with trailer hitch: If a transport device, e.g.trailer or bicycle rack is attached to the trailer hitch, and the electrical connection is correctly

established. PARKTRONIC Parking Assist is deactivated for the rear zone.

Problems with Parking Assist PARKTRONIC
If the Parking Assist PARKTRONIC display lights up red for approximately three seconds and then goes out, and the [P OFF] symbol appears in the driver display, the system may have been deactivated due to signal interference. Start the vehicle again and check if Parking Assist PARKTRONIC works at a different location.

If a warning tone also sounds, it may be due to one of the following causes:

- **The sensors are dirty:** clean the sensors (→ page 567).
- **Parking Assist PARKTRONIC has been deactivated due to a malfunction:** restart the vehicle. If the problem persists, consult a qualified specialist workshop.

Activating/deactivating Parking Assist PARKTRONIC

! **NOTE** Vehicle damage when parking or manoeuvring due to nearby objects

Parking Assist PARKTRONIC may not detect certain objects in the close-up range.

▶ When parking or manoeuvring, pay particular attention to objects that are under or above the sensors, e.g. flower pots or drawbars. The vehicle or other objects may otherwise be damaged.

Requirements
- The camera menu is open.
- Or: the PARKTRONIC pop-up window appears.

▶ Tap [P] on the central display.

If the indicator lamp is lit, Parking Assist PARKTRONIC is active. If the indicator lamp does not light up or the symbol [P OFF] is displayed, PARKTRONIC Parking Assist is not active.

ⓘ Parking Assist PARKTRONIC is automatically activated when the vehicle is started.

Alternatively, Parking Assist PARKTRONIC can be activated or deactivated in the quick-access menu.

Setting the warning tones of Parking Assist PARKTRONIC

Multimedia system:

→ [⌂] ▸▸ Settings ▸▸ Assistance ▸▸ Parking ▸▸ PARKTRONIC

Adjusting warning tones

▶ Select Set warning tones.

▶ Set the desired level under Volume or Tone pitch.

Activating/deactivating audio fadeout

▶ Audio fadeout select and Audio fade for warnings switch on or off.
The volume of the currently playing media source is reduced during a Parking Assist PARKTRONIC warning tone.

or

- ▶ Audio fadeout select and Audio fadeout in trans. position R switch on or off.
  The volume of the currently playing media source is reduced when reverse gear is engaged.

Setting the time of the warnings

- ▶ Select Time of warning.
- ▶ Set the desired warning time for Front or Rear.
- ▶ Activate or deactivate Side warning.

Active Parking Assist

Function of Active Parking Assist

Active Parking Assist is an electronic parking assistance system which uses ultrasound with the assistance of the reversing camera and 360° camera. When you are driving forwards up to approximately 35 km/h, the system automatically measures parking spaces on both sides of the vehicle.

Active Parking Assist serves solely as an aid. It is not a substitute for you having to pay attention to your surroundings. The responsibility for safe manoeuvring and parking remains with you. Ensure that no persons, animals or objects etc. are in the manoeuvring range.

Active Parking Assist offers the following functions:

Vehicles with reversing camera

- Parking in parking spaces parallel to the roadway
- Reversing into parking spaces perpendicular to the roadway

The parking space is freely selectable. The parking procedure is executed with the vehicle reversing.

Vehicles with 360° camera

- Parking in parking spaces parallel to the roadway
- Parking in parking spaces perpendicular to the roadway (either forwards or reversing as desired)
- Parking in parking spaces that can only be detected as such from markings (forexample at the roadside)
- Exiting parking spaces if you have parked using Active Parking Assist

The parking space is freely selectable. The parking direction (forwards or reversing) can also be freely selected, depending on the orientation of the parking space.

If Active Parking Assist is available, the [P] message appears in the driver display. When the system detects parking spaces, [◁P▷] appears. The arrows show the side of the roadway on which free parking spaces are located. These are then shown on the central display.

When Active Parking Assist is activated, the turn signal indicators are activated based on the calculated path of your vehicle. The procedure is assisted by acceleration, braking, steering, and gear changes when entering or exiting a parking space.

To start the parking procedure, press the button [P🎥] (→ page 364).

Active Parking Assist will be cancelled in the following situations:

- You press the [P] button again.
- You begin steering.
- You select park position [P].
- You engage the electric parking brake.
- ESP® intervenes.
- You open the driver's door.

System limits

If the exterior lighting is malfunctioning, Active Parking Assist is not available.

Objects above or below the detection range of Active Parking Assist, e.g. protruding loads, overhangs or loading ramps of trucks or parking space boundaries are not detected when measuring the parking space. Neither are these subsequently taken into account when calculating the parking procedure. In some circumstances, Active Parking Assist may prematurely guide you into the parking space or brake too late.

Certain environmental conditions, suchas snowfall or heavy rain, may lead to a parking space being mismeasured. Parking spaces that are partially occupied by trailer drawbars might not be identified as such or be measured incorrectly. Only use Active Parking Assist on level road surfaces with adequate grip.

⚠ **WARNING** Risk of accident due to objects located above or below the detection range of Active Parking Assist

If there are objects above or below the detection range, the following situations may arise:

- Active Parking Assist may steer too early.
- The vehicle may not stop in front of these objects.

There is a danger of collision!

▶ In these situations, do not use Active Parking Assist.

Active Parking Assist can also display unsuitable parking spaces, e.g. parking spaces in which parking is not permitted or on unsuitable surfaces.

Do not use Active Parking Assist in the following situations:

- In extreme weather conditions suchas ice, packed snow or in heavy rain.
- When transporting a load that protrudes beyond the vehicle.
- If the parking space is on a steep downhill or uphill gradient.
- When snow chains are fitted.
- When a trailer or bicycle rack is attached
- Directly after a tyre change or when spare tyres are fitted.
- If the tyre pressure is too low or too high.
- On steep inclines of more than approximately 15 %.

You can watch an animation on this topic via the following link:

Parking with Active Parking Assist

WARNING Risk of accident due to objects located above or below the detection range of Active Parking Assist

If there are objects above or below the detection range, the following situations may arise:

- Active Parking Assist may steer too early.
- The vehicle may not stop in front of these objects.

There is a danger of collision!

▶ In these situations, do not use Active Parking Assist.

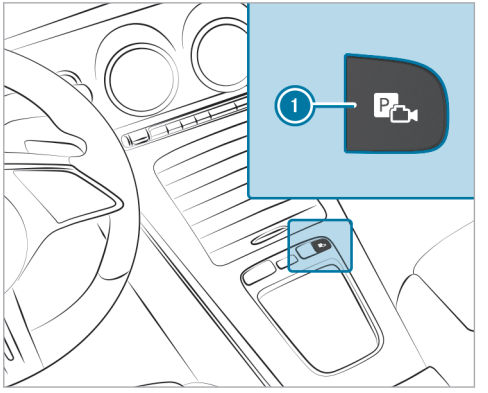

▶ Press button 1.

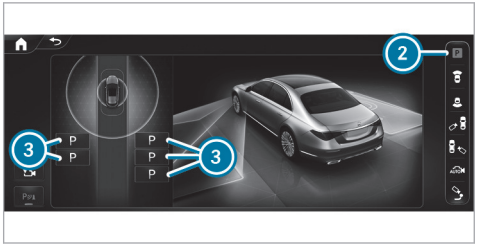

Parking Assistance menu (example)

▶ Select 2 Parking Assistance menu.

Parking spaces 3 detected by the system are shown on the central display.

Parking Assistance menu (example)

When the vehicle is stationary, the indicated vehicle path 4 into the currently selected parking space 5 also appears.

- If a parking space is displayed: stop the vehicle.
- If necessary, select another parking space.
- **Vehicles with 360° camera:** to change the parking direction, tap the selected parking space again.
- **To start the parking procedure:** press button 1 again.
- Take your hands off the steering wheel. The vehicle drives into the selected parking space.

The turn signal indicator is switched on automatically when the parking procedure begins. You are responsible for selecting the turn signal indicator in accordance with the traffic conditions. If necessary, select the turn signal indicator accordingly.

⚠ **WARNING** Risk of accident due to vehicle swinging out while parking or pulling out of a parking space

While parking or exiting a parking space, the vehicle swings out and can drive onto areas of the oncoming lane.

This could cause you to collide with objects or other road users.

- Pay attention to objects and other road users.
- Where necessary, stop the vehicle or cancel the parking procedure with Active Parking Assist.

On completion of the parking procedure, the Active Parking Assist finished message appears.

- Secure the vehicle against rolling away. When required by legal requirements or local conditions: turn the wheels towards the kerb.

ⓘ You can stop the vehicle and change the transmission position during the parking procedure. The system then calculates a new vehicle path. If no new vehicle path is available, the transmission position can be changed again, or the process can be cancelled.

Exiting a parking space with Active Parking Assist

⚠ **WARNING** Risk of accident due to objects located above or below the detection range of Active Parking Assist

If there are objects above or below the detection range, the following situations may arise:

- Active Parking Assist may steer too early.
- The vehicle may not stop in front of these objects.

There is a danger of collision!

▶ In these situations, do not use Active Parking Assist.

Requirements

- The vehicle is equipped with a 360° camera.
- The vehicle has been parked with Active Parking Assist.

▶ Start the vehicle.

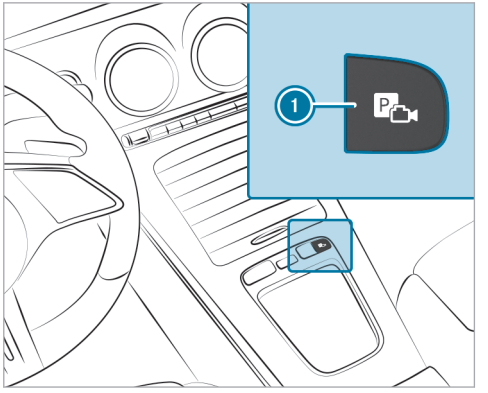

▶ Press button 1.

Parking Assistance menu (example)

▶ Select Parking Assistance 2 menu.

▶ If necessary, change direction of exit 3.

▶ **To start exiting the parking space:** press button 1 again.

▶ If necessary, change the transmission position. Observe any messages displayed on the driver's display and central display.
The vehicle moves out of the parking space.

The turn signal indicator is automatically switched on when exiting a parking space begins and switched off when it is completed. You are responsible for selecting the turn signal indicator

in accordance with the traffic conditions. If necessary, select the turn signal indicator accordingly.

⚠ **WARNING** Risk of accident due to vehicle swinging out while parking or pulling out of a parking space

While parking or exiting a parking space, the vehicle swings out and can drive onto areas of the oncoming lane.

This could cause you to collide with objects or other road users.

- ▶ Pay attention to objects and other road users.
- ▶ Where necessary, stop the vehicle or cancel the parking procedure with Active Parking Assist.

After the parking space has been exited, a warning tone and the [ ] Active Parking Assist finished, take control of vehicle message prompt you to take control of the vehicle. You have to accelerate, brake, steer and change gear yourself again.

If you do not react to the prompt to take control of the vehicle, the system will brake the vehicle to a standstill.

Pausing Active Parking Assist

⚠ **WARNING** Risk of accident due to objects located above or below the detection range of Active Parking Assist

If there are objects above or below the detection range, the following situations may arise:

- Active Parking Assist may steer too early.
- The vehicle may not stop in front of these objects.

There is a danger of collision!

- ▶ In these situations, do not use Active Parking Assist.

You can interrupt the parking or exiting procedure of Active Parking Assist by performing one of the following actions, forexample:

- ▶ Depress the brake pedal.
- ▶ Open the front passenger door, a rear door, the boot or the bonnet.
- ▶ Apply the electric parking brake or activate the HOLD function.
- ▶ **To resume the parking or exiting procedure:** gently depress the accelerator pedal.

ⓘ If the electric parking brake was applied before Active Parking Assist was activated, depress the accelerator pedal lightly to start the parking or exiting procedure.

Check the area around your vehicle again before resuming a paused parking procedure. Ensure that persons, animals or objects are no longer in the manoeuvring range. Also, observe the system limits of Active Parking Assist.

Automatic braking function of Active Parking Assist

⚠ **WARNING** Risk of accident due to objects located above or below the detection range of Active Parking Assist

If there are objects above or below the detection range, the following situations may arise:

- Active Parking Assist may steer too early.
- The vehicle may not stop in front of these objects.

There is a danger of collision!

▶ In these situations, do not use Active Parking Assist.

Persons or objects detected in the manoeuvring range could cause the vehicle to brake sharply and interrupt the parking or exiting procedure. The vehicle will then be held at a standstill. The parking or exiting procedure is resumed if you depress the accelerator pedal.

Check the area around your vehicle again before resuming the parking or exiting procedure. Ensure that persons, animals or objects are no longer in the manoeuvring range. Also, observe the system limitations of Active Parking Assist.

Manoeuvring assistant

Function of Drive Away Assist

Drive Away Assist can reduce the severity of an impact when pulling away. If an obstacle is detected in the direction of travel, the vehicle's speed is briefly reduced to approx. 2 km/h. When a critical situation is detected, the symbol appears in the central display.

Drive Away Assist can be switched off or on in the menu Manoeuvring assistance.

ⓘ You can cancel an intervention by Drive Away Assist at any time by deactivating Parking Assist PARKTRONIC.

⚠ **WARNING** Risk of accident caused by limited detection performance of Drive Away Assist

Drive Away Assist cannot always clearly identify objects and traffic situations.

▶ Always pay careful attention to the traffic situation; do not rely on Drive Away Assist alone.

▶ Be prepared to brake or swerve as necessary, provided the traffic situation permits and that it is safe to take evasive action.

Drive Away Assist is only an aid. It is not a substitute for you paying attention to the surroundings. The responsibility for safe manoeuvring and parking remains with you. Make sure that no persons, animals or objects etc. are in the manoeuvring range.

A risk of a collision may arise in the following situations, forexample:

- If the driver mixes up the accelerator and brake pedals.
- If an incorrect transmission position is engaged.

The Drive Away Assist function is active under the following conditions:

- If Parking Assist PARKTRONIC is activated.

- If you shift the transmission position to R or D when the vehicle is stationary.
- If the detected obstacle is less than approx. 1.0 m away.
- Manoeuvring assistant is activated (→ page 370).

System limits

The performance of Drive Away Assist is limited on inclines.

Drive Away Assist is not available if a transport device, e.g. a trailer or bicycle rack is attached to the trailer hitch, and the electrical connection is correctly established.

ⓘ Also, observe the system limits of Parking Assist PARKTRONIC (→ page 358).

Function of Cross Traffic Alert

ⓘ The Cross Traffic Alert function is only available for vehicles with Blind Spot Assist.

The Cross Traffic Alert function can warn drivers of any crossing traffic when reversing and manoeuvring out of a parking space. The radar sensors in the bumper also monitor the area adjacent to the vehicle. If a critical situation is detected, the symbol appears on the central display and the vehicle can be braked automatically.

If the radar sensors are obstructed by vehicles or other objects, detection is not possible.

The Cross Traffic Alert function can be switched on or off in the Manoeuvring assistance menu depending on the respective country (→ page 370).

The Cross Traffic Alert function is active under the following conditions:

- The vehicle is reversing at walking pace.
- Manoeuvring assistant is activated (→ page 370).

ⓘ Observe also the instructions on Blind Spot Assist (→ page 343).

System limits

The Cross Traffic Alert function is not available on inclines.

If a transport device, e.g. trailer or bicycle rack is attached to the trailer hitch and the electrical connection is correctly established, the Cross Traffic Alert function is not available.

Function of close-range braking

Close-range braking can prevent collisions with pedestrians when the vehicle is reversing at slow speeds. If the reversing camera detects a person in the vehicle's path, the vehicle can be braked to a standstill.

Close-range braking can intervene under the following conditions:

- The vehicle is reversing at a speed slower than 10 km/h.
- The camera image is shown in the central display (→ page 358).

Depending on the country, close-range braking can be deactivated or activated in the Manoeuvring assistance menu (→ page 370).

When close-range braking is triggered, the symbol appears in red in the selected view in the menu Camera & parking.

ⓘ If close-range braking is not available, the symbol appears in grey.

Close-range braking serves solely as an aid. It is not a substitute for you having to pay attention to your surroundings. The responsibility for safe manoeuvring and parking remains with you. Ensure that no persons, animals or objects etc. are in the manoeuvring range.

WARNING Risk of accident caused by limited detection by the manoeuvring brake function

The manoeuvring brake function cannot always clearly detect people. Other obstacles are not detected by the function.

In these cases, the function may brake unnecessarily or not brake at all.

- Always pay careful attention to the traffic situation; do not rely on the manoeuvring brake function alone.
- Be ready to brake.

System limits

Observe the system limits of the following functions:

- Active Parking Assist (→ page 362)
- 360° camera (→ page 353)
- Reversing camera (→ page 350)

The close-range braking function is not available in the following situations:

- on inclines
- If transport equipment, forexample a trailer or bicycle rack, is attached to the trailer hitch and the electrical connection has been correctly established.

You can watch an animation on this topic via the following link:

Activating/deactivating manoeuvring assistance

Multimedia system:

→ ⌂ ▸▸ Settings ▸▸ Assistance ▸▸ Parking

ⓘ This function is an on-demand feature (→ page 79).

ⓘ The Activating/deactivating Manoeuvering assistance function is not available in all countries.

- Select Manoeuvring assistance.
- Activate or deactivate the desired manoeuvring assistance.

Trailer hitch

Notes on trailer operation

NOTE The operating permit may be invalidated due to the illegal installation of trailer hitches

The installation – including retrofitting – of a non-folding or non-removable trailer hitch that even partially conceals the license plate or the lighting system is prohibited.

▶ Observe the applicable legal regulations for the installation of trailer hitches.

WARNING Risk of accident due to car/trailer combination swerving

If you drive too fast in trailer operation, the car/trailer combination may start to swerve.

This could cause you to lose control of the car/trailer combination. The car/trailer combination may even overturn.

▶ Under no circumstances should you try to straighten the car/trailer combination by increasing your speed.

▶ Reduce the speed and do not countersteer.

▶ Brake if necessary.

NOTE Damage to the engine due to overheating

▶ If you have a trailer hitch retrofitted, modifications to the engine cooling system may be necessary depending on the vehicle type.

If you have a trailer tow hitch retrofitted, observe the fastening points on the vehicle frame.

Retrofitting a trailer hitch is permissible only if a trailer load is specified in your vehicle documents. If this is not the case, the vehicle is not approved for trailer operation.

Further information can be obtained at a qualified specialist workshop.

Observe the following notes on the tongue weight:

- do not use a tongue weight that exceeds or falls below the permissible tongue weight
- use a tongue weight as close as possible to the maximum tongue weight

Do not exceed the following values:

- Permissible trailer load
- Permissible rear axle load of the towing vehicle
- Permissible gross mass of the towing vehicle
- Permissible gross mass of the trailer
- Maximum permissible speed of the trailer

Ensure the following before starting a journey:

- the tyre pressure on the rear axle of the towing vehicle is set for a maximum load
- the lighting of the connected trailer is operational
- **vehicles without LED headlamps or MULTIBEAM LED headlamps:** the headlamps have been set correctly

In the event of increased rear axle load, the car/trailer combination may not exceed a maximum speed of 100 km/h for reasons concerning the operating permit. This also applies in countries in which the permissible maximum speed for car/trailer combinations is above 100 km/h.

Folding the ball neck out and in

WARNING Risk of accident due to the ball neck not being engaged

If the ball neck is not engaged, the trailer may come loose.

- Always engage the ball neck as described.

WARNING Risk of injury from ball neck swinging outwards

The ball neck may swing outwards when unlocking or when it has not been properly engaged.

There is a risk of injury within the ball neck's range of movement!

- Unlock the ball neck only when its range of movement is unobstructed.
- Always be sure the ball neck is engaged when folding inwards.

NOTE Increased risk of damage to property due to folded-out ball neck

- When the trailer is not coupled or the bicycle rack is attached, fold in the ball neck or, in the case of a fully electric trailer hitch, retract the ball neck.

NOTE Damage to the vehicle due to incorrect use of the trailer hitch

If a trailer hitch is used to recover the vehicle, the vehicle or the trailer hitch itself may be damaged in the process.

- Use the trailer hitch only for pulling a trailer or attaching approved carrier systems (e.g. a bicycle rack).
  Exception: Since vehicles with a trailer hitch do not have a fixture for a towing eye at the rear, towing or tow-starting is permitted.
- When towing or tow-starting with the trailer hitch, observe the information in the section "Fitting and removing the towing eye."

Folding the ball neck out

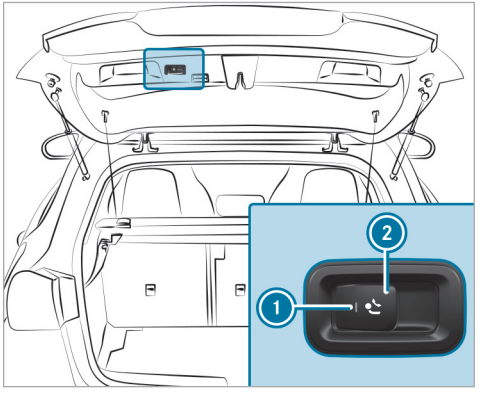

- Secure the vehicle against rolling away.
- Keep the swivel range clear.
- Remove the trailer cable or adapter plug.
- Pull switch (2) until the ball neck unlocks. The ball neck will fold out from under the rear bumper.

  Indicator lamp (1) will flash.

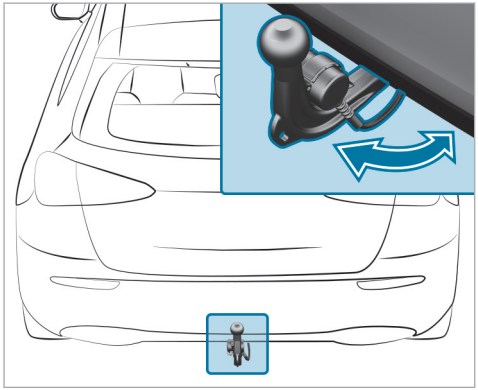

- Pull the ball neck in the direction of the arrow until it engages audibly in a vertical position. Indicator lamp (1) on the ball neck release switch will go out.

  If the ball neck is not securely locked in place, a message reading Trailer coupling Check lock will appear on the driver's display.
- Remove the cover cap from the ball head and store it in a safe place.

Make sure that the ball on the ball neck is clean. Check that it is either greased or dry (grease-free), depending on the instructions for the trailer.

Folding the ball neck in

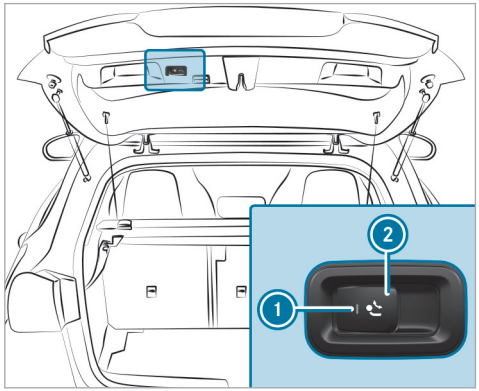

- Pull switch (2) until the ball neck unlocks. The ball neck will fold up under the rear bumper.

  Indicator lamp (1) will flash.

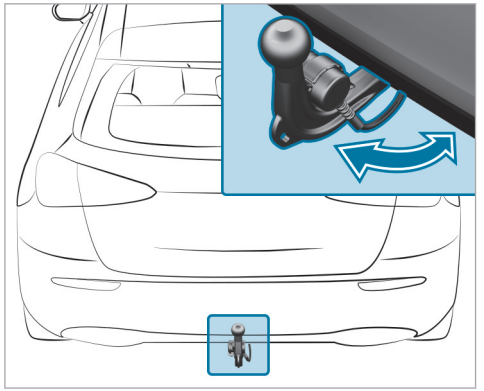

▶ Push the ball neck in the direction of the arrow until it engages audibly behind the bumper.
Indicator lamp ① will go out and the message on the driver's display will disappear.

Observe the information about indicators on the driver's display:

- Indicator and warning lamps (→ page 838)
- Display messages (→ page 755)

Coupling up/uncoupling a trailer

The trailer will be correctly detected by the vehicle only if the following conditions are met:

- The ball neck is extended and engaged in a securely locked position.

Trailers with a 7-pin plug can be connected to the vehicle with the following adapters:

- adapter plug
- adapter cable

The trailer will be correctly detected by the vehicle only if the following conditions are met:

- the trailer is connected correctly
- the trailer lighting system is in working order

A correctly connected trailer influences, among other things, the functions of the following systems:

- ESP® trailer stabilisation
- Active Lane Keeping Assist
- Parking Assist PARKTRONIC
- Active Parking Assist
- Blind Spot Assist
- Drive Away Assist
- Cross Traffic Alert
- Manoeuvring brake function
- Reversing camera
- 360° Camera

Coupling up a trailer

! **NOTE** Damage to the starter battery due to full discharge

Charging the trailer battery using the power supply of the trailer can damage the starter battery.

▶ Do not use the vehicle's power supply to charge the trailer battery.

▶ Secure the vehicle against rolling away.

▶ Remove the cover cap from the ball head and store it in a safe place.

▶ Position the trailer on a level surface behind the vehicle and couple it up to the vehicle.

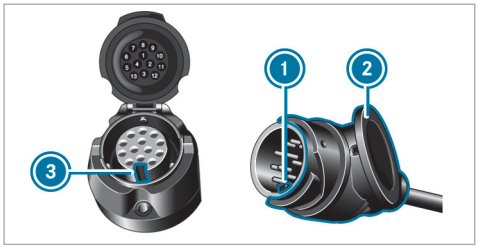

▶ Open the socket cap.
▶ Insert the plug with lug ① in groove ③ on the socket.
▶ Turn bayonet coupling ② to the right as far as it will go.
▶ Let the cap engage.
▶ Secure the cable to the trailer with cable ties (only if you are using an adapter cable).
▶ Make sure that the cable is always slack for ease of movement during cornering.

In the following circumstances, a message may appear on the driver's display even if the trailer has been connected correctly:

- LEDs have been installed in the trailer lighting system.
- The current has fallen below the trailer lighting system's minimum current (50 mA).

ⓘ Accessories can be connected to the permanent power supply up to 180 W and to the power supply that is switched on via the ignition lock.

Uncoupling a trailer

⚠ **WARNING** Risk of being crushed and becoming trapped when uncoupling a trailer

When uncoupling a trailer with an engaged inertia-activated brake, your hand may become trapped between the vehicle and the trailer drawbar.

▶ Do not uncouple trailers with an engaged overrun brake.

! **NOTE** Damage during uncoupling with an engaged overrun brake

The vehicle may be damaged if you uncouple with an engaged overrun brake.

▶ Do not uncouple trailers with an engaged overrun brake.

▶ Secure the vehicle against rolling away.
▶ Disconnect the electrical connection between the vehicle and the trailer.
▶ Uncouple the trailer.
▶ Place the cover on the ball head.

ⓘ **Trailers with LED lighting:** after uncoupling the trailer, switch the vehicle on and then off again.

Selecting a trailer type

Multimedia system:

→ [⌂] ▸▸ Settings ▸▸ Vehicle ▸▸ Driving ▸▸ Trailer type

Making settings for a trailer

The settings in this menu enable the calculation of a route suitable for the selected trailer and optimise the calculated arrival time.

▶ Select the desired trailer type.

▶ Select the maximum permissible speed of the selected trailer.

▶ **To save changes:** select Confirm.

ⓘ When contact with the trailer socket is established (trailer/rear bicycle rack), a menu automatically appears on the display.

The following options are available:

- Bicycle rack
- Small trailer
- Large trailer

Bicycle rack function

⚠ **WARNING** Risk of an accident if the bicycle rack is used incorrectly

The bicycle rack may become detached from the vehicle in the following cases:

- the permissible load capacity of the trailer hitch is exceeded.
- the bicycle rack is used incorrectly.
- the bicycle rack is secured to the ball neck beneath the ball head.

Observe the following for your own safety and that of other road users:

- always adhere to the permissible load capacity of the trailer hitch.
- always observe the permissible rear axle load of the towing vehicle.
- use the bicycle rack only to transport bicycles.
- always properly secure the bicycle rack by attaching it to the ball head.
- use only bicycle racks approved by Mercedes-Benz.
- always observe the bicycle rack operating instructions.

! **NOTE** Damage to or breakage of the trailer hitch due to unsuitable or improperly used bicycle rack.

▶ Only use bicycle racks approved by Mercedes-Benz properly as described below.

! **NOTE** Increased risk of damage to property due to folded-out ball neck

▶ When the trailer is not coupled or the bicycle rack is attached, fold in the ball neck or, in the case of a fully electric trailer hitch, retract the ball neck.

NOTE The operating permit may be invalidated due to the illegal installation of trailer hitches

The installation – including retrofitting – of a non-folding or non-removable trailer hitch that even partially conceals the license plate or the lighting system is prohibited.

▶ Observe the applicable legal regulations for the installation of trailer hitches.

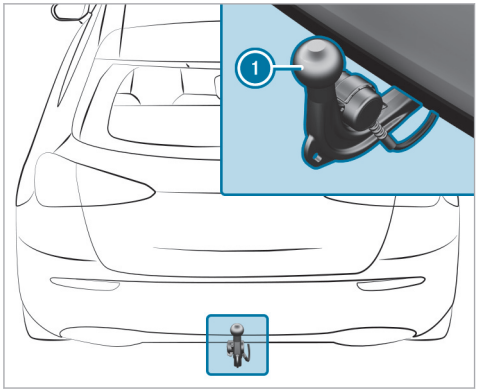

Depending on the bicycle rack's design, up to three bicycles can be transported on the bicycle rack.

When mounted by attaching to ball head (1), the maximum load capacity is 75 kg.

The maximum load capacity is calculated from the weight of the bicycle rack and the bicycle rack load.

Observe the notes on driving with a roof load, trailer or fully laden vehicle (→ page 238).

When using a bicycle rack, set the tyre pressure for increased load on the rear axle of the vehicle. Further information on the tyre pressure can be found in the tyre pressure table (→ page 600).

Notes on loading

The larger the distance between the load's centre of gravity and the ball head, the greater the load on the trailer hitch.

Therefore, observe the following notes:

- mount heavy bicycles as close to the vehicle as possible
- always distribute the load on the bicycle rack as evenly as possible across the vehicle's longitudinal axis

Mercedes-Benz recommends removing all detachable parts from bicycles (e.g. baskets, child seats, rechargeable batteries) before loading them onto the bicycle rack. This will improve the aerodynamic resistance and centre of gravity of the bicycle rack.

Always secure the bicycles to prevent them from moving around and check them at regular intervals to ensure that they are secure.

Do not use tarpaulins or other covers. The driving characteristics and rear view may be impaired. In addition, aerodynamic resistance and the load on the trailer hitch will increase.

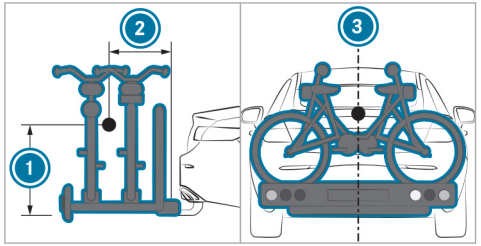

Load distribution on the bicycle rack

1. Vertical distance between centre of gravity and ball head
2. Horizontal distance between centre of gravity and ball head
3. The centre of gravity is on the vehicle's centre axis

Observe the following information when you are loading the bicycle rack with up to three bicycles:

Loading the bicycle rack

Total weight of bicycle rack and load	Max. distance 1	Max. distance 2
Up to 75 kg	420 mm	300 mm

Vehicle towing instructions

The vehicle is not suitable for the use of tow bar systems that are used for flat towing or dinghy towing, for example. Attaching and using tow bar systems may result in damage to the vehicle. When you are towing a vehicle with tow bar systems, safe driving characteristics cannot be guaranteed for the towing vehicle or the towed vehicle. The vehicle-trailer combination may swerve from side to side.

Observe the following information:

- Permitted towing methods (→ page 588)
- **Plug-in hybrid:** permitted towing methods (→ page 589)
- The notes on towing the vehicle with both axles on the ground (→ page 54)

Notes on the driver's display

WARNING Risk of accident if the driver's display fails

If the driver's display fails or malfunctions, you may not be aware of any functional limitations to safety-critical systems. This may affect the operating safety of the vehicle.

▶ Park the vehicle safely as soon as possible and notify a qualified specialist workshop.

If the operating safety of your vehicle is impaired, park the vehicle immediately and safely. Contact a qualified specialist workshop.

The driver's display shows the following basic information:

- Speed and engine speed
- Fuel level and coolant temperature
- Indicator and warning lamps

Additional functions available include the following:

- Different menus, e.g. for assistance and navigation
- Status displays for the driving systems
- Display messages
- Information on speed, Consumption and range
- Power meter level and state of charge of the high-voltage battery
- Indicator and warning lamps

Additional notes for plug-in hybrid vehicles:

- Further displays on the driver's display:
  - READY Drive system is activated
  - "Foot off the accelerator"

Some menu content and settings can be customised (→ page 381).

Operating the driver's display

WARNING Risk of distraction from information systems and communications equipment

If you operate information systems and communication devices integrated in the vehicle when driving, you could be distracted from the traffic situation. This could also cause you to lose control of the vehicle.

▶ Only operate this equipment when the traffic situation permits.

▶ If you cannot be sure of this, stop the vehicle whilst paying attention to road and traffic conditions and operate the equipment with the vehicle stationary.

Observe the legal requirements for the country in which you are currently driving when operating the driver's display.

Scrolling on the menu bar

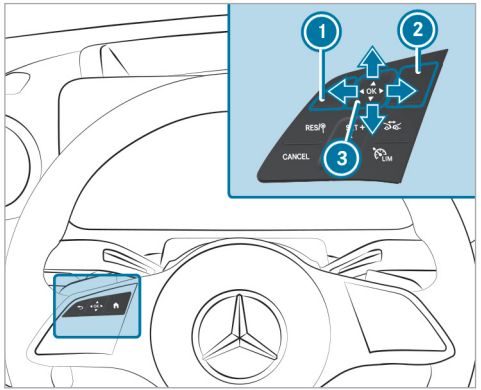

1. Back button
2. Main menu button
3. Touch Control

The content on the driver's display is controlled using the control elements on the left side of the steering wheel. You can use Touch Control 3 to navigate vertically and horizontally by swiping with one finger. Confirm the selection by pressing the Touch Control.

ⓘ To operate Touch Control 3 in the most effective way, use the tip of your thumb if possible. You can also set the sensitivity of the Touch Control on the central display (→ page 412).

- ▶ Briefly press main menu button 2.
- ▶ Select a menu by swiping to the left or right on Touch Control 3.
- ▶ **To confirm:** press Touch Control 3.

You can watch an animation on this topic via the following link:

Driver display menus

Notes on menus on the driver's display

⚠ **WARNING** Risk of distraction from information systems and communications equipment

If you operate information systems and communication devices integrated in the vehicle when driving, you could be distracted from the traffic situation. This could also cause you to lose control of the vehicle.

- ▶ Only operate this equipment when the traffic situation permits.
- ▶ If you cannot be sure of this, stop the vehicle whilst paying attention to road and traffic conditions and operate the equipment with the vehicle stationary.

Observe the legal requirements for the country in which you are currently driving when operating the driver's display.

The following menus can be called up via the menu bar on the driver's display:

- Understated
- Sport
- Classic
- Navigation
- Assistance
- Service
- Mercedes-AMG vehicles: TRACK PACE

On some of these menus, you can choose between different display content on the centre display area.

On most of the menus, you can use Options to configure further settings for the menu-specific display content.

You can watch an animation on this topic via the following link:

Calling up and operating menus on the driver's display

Calling up a menu via the driver's display menu bar

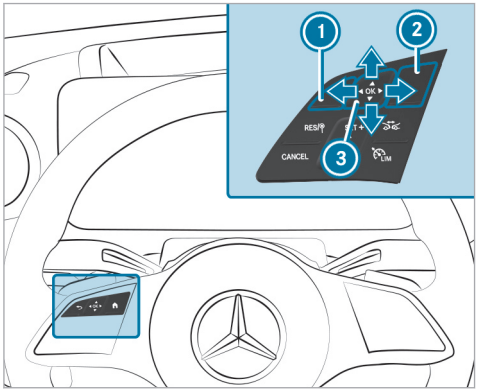

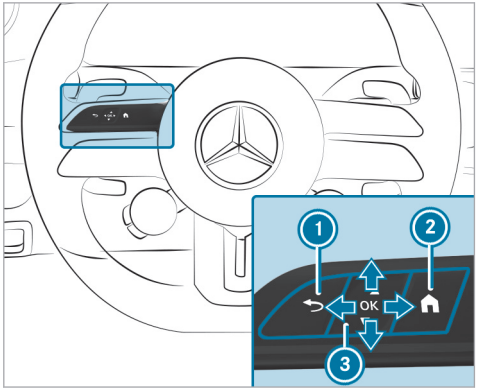

Mercedes-AMG vehicles

1. Back button
2. Main menu button
3. Touch Control

▶ Press main menu button 2 on the steering wheel.
The driver's display menu bar will open.

- Swipe to the left or right on left-hand Touch Control ③ and select a menu (e.g. the Classic menu) on the menu bar.
- **To confirm:** press left-hand Touch Control ③.

Calling up or exiting the **Options** submenu

- **To call up:** press left-hand Touch Control ③.
- **To exit:** press back button ①.

Browsing through display content or lists

- Swipe up, down, left or right on left-hand Touch Control ③.

ⓘ Within different menus, icons will also appear at the right-hand edge of the centre display section to indicate your current position in a list.

Setting display content as the standard display

You can set custom-configured menu display content as the standard display.

- Press and hold left-hand Touch Control ③ until the bar display is completely filled. The Set direct entry? prompt will appear.
- Swipe left on left-hand Touch Control ③ and select Yes.
- **To confirm:** press left-hand Touch Control ③.
- **To call up standard displays:** press back button ① on the upper level of a menu.

ⓘ Pressing back button ① on the standard display will call up the previous menu.

Resetting values

- **To call up the Options submenu:** press left-hand Touch Control ③.
- Select Yes.
- **To confirm:** press left-hand Touch Control ③.

Configuring settings on the Classic or Understated menus

Driver's display:
→ Classic

Selecting display content in the centre display area of the **Classic** menu

- Call up the Classic menu via the driver's display menu bar.
- **To select display content:** swipe upwards or downwards on the left-hand Touch Control and select the desired display content.

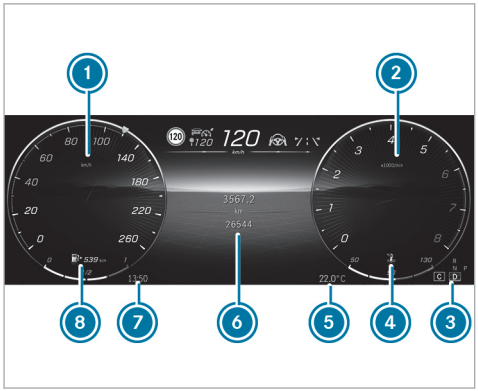

1 Speedometer
2 Rev counter or clock
3 Transmission position
4 Coolant temperature display
5 Outside temperature
6 Centre display content in the Classic menu (example: trip distance)
7 Time
8 Fuel level and fuel filler flap location indicator

The following display content can be shown in centre display area 6 of the Classic menu:

- Trip and total distance
- Trip computer From start and From reset
- ECO display
- Consumption
- ATTENTION ASSIST
- Audio
- Navigation

Trip computer (example)

1 Proportion of driving done in electric mode (distance travelled electrically per total distance travelled)

Information about the range

- The actual range achieved may differ from the range displayed. Your previous driving style will be taken into account when the range is being calculated.
- Factors such as outside temperature or climate control settings have a direct influence on the achievable range.

- While the navigation system or commuter route is active, additional information about the route ahead can be included in the range calculation.

Information on electrical consumption

- The From start and From reset consumption figures take into account all active consumer equipment when it comes to the drive system's operational readiness READY.

Information on the proportion of driving done in electric mode

- When the proportion of driving done in electric mode is determined, only distances driven under the following conditions are taken into account:
  - The combustion engine is switched off.
  - The Electric or Hybrid drive program is active.
  - The high-voltage battery is charged.

Distances travelled under electric power in the Battery Level drive program or with an empty high-voltage battery will not be taken into account in the proportion of driving done in electric mode.

ⓘ To increase the proportion of driving done in electric mode, charge the high-voltage battery as frequently as possible at a suitable charging facility.

Selecting the radio station or track on the station or track list

You can select radio stations or tracks on the station or track list in the audio display content of the Classic menu.

The following adjustments can be made in the MBUX multimedia system:

- Configuring the station or track list
- Switching between media sources
- Setting the frequency band

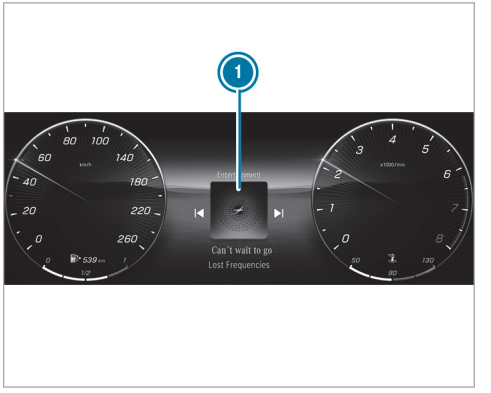

1 Track list for the audio display content in the centre display area (example)

▶ **To change radio stations or tracks:** swipe left or right on the left-hand Touch Control and select a radio station or track on station or track list 1.

ⓘ If you do not carry out any operations immediately after opening station or track list ①, the view will return to the radio station or track selected.

ⓘ The radio station or track displayed when the vehicle is restarted depends on the user profile used for the previous trip.

Calling up or exiting the **Options** submenu on the **Classic** menu

Depending on the selected display content, you can make changes in the centre display area on the Options submenu.

▶ **To call up the Options submenu:** press the left-hand Touch Control.

▶ **To exit the Options submenu:** press the back button ⮌.

The following functions may be available on the Options submenu, for example:

- Navigation: selecting and adjusting zoom, route guidance and map settings
- Resetting the trip odometer
- Resetting the trip computer From start
- Resetting the trip computer From reset
- Resetting the ECO display values

Changing colour settings on the **Understated** menu

▶ Call up the Understated menu via the driver's display menu bar.

▶ **To call up the colour list:** press the left-hand Touch Control.
The colour list on the Understated menu will appear.

▶ **To select colour settings:** swipe upwards or downwards on the left-hand Touch Control and select the desired colour setting.

ⓘ If you do not carry out any operations within a limited time after opening the colour list, the view will switch back to the default view of the Understated menu.

▶ **To exit the colour list:** press the back button ⮌.

ⓘ Depending on the equipment, the selected colour setting will be adopted for the ambient lighting and the MBUX multimedia system. If you select the Understated menu on the driver's display, the content in the MBUX multimedia system will also be made smaller.

Configuring settings on the Classic or Understated menus (Mercedes-AMG vehicles)

Driver's display:
→ Classic

Selecting display content in the centre display area of the **Classic** menu

▶ Call up the Classic menu via the driver's display menu bar.

▶ **To select display content:** swipe upwards or downwards on the left-hand Touch Control and select the desired display content.

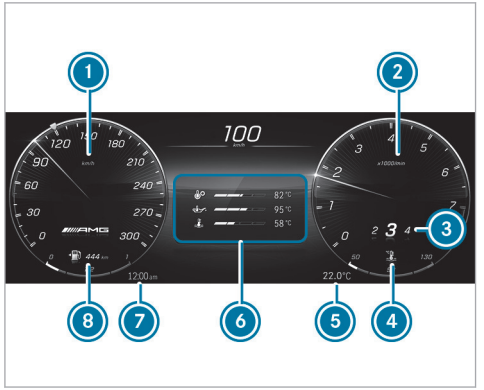

1. Speedometer
2. Rev counter
3. Gear display
4. Coolant temperature display
5. Outside temperature
6. Display content, centre on the Classic menu (example: temperature)
7. Time
8. Fuel level and fuel filler flap location indicator

The following display content of the Classic menu can be shown in centre display area 6:

- Trip and total distance
- Trip computer From start and From reset
- ECO display
- Consumption
- ATTENTION ASSIST
- Audio
- Navigation
- Temperature (transmission oil, engine oil and coolant)
- Setup
- Engine data

ⓘ Depending on the vehicle equipment, AMG-specific content regarding temperature, setup and engine data will be displayed. The settings for the setup display content can be configured either via the buttons on the multi-function steering wheel or via the MBUX multimedia system (→ page 256).

Selecting the radio station or track on the station or track list

You can select radio stations or tracks on the station or track list in the audio display content of the Classic menu.

The following adjustments can be made in the MBUX multimedia system:

- Configuring the station or track list
- Switching between media sources
- Setting the frequency band

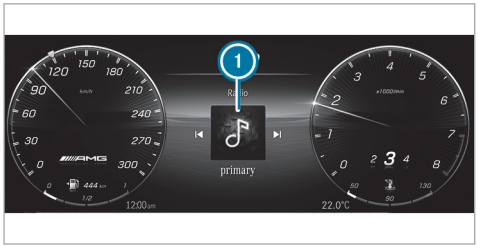

1 Track list for the audio display content in the centre display area (example)

▶ **To change radio stations or tracks:** swipe left or right on the left-hand Touch Control and select a radio station or track on station or track list 1.

ⓘ If you do not carry out any operations immediately after opening station or track list 1, the view will return to the radio station or track selected.

ⓘ The radio station or title displayed when the vehicle is restarted depends on the user profile used for the previous trip.

Calling up or exiting the Options submenu on the Classic menu

Depending on the selected display content, you can make changes in the centre display area on the Options submenu.

▶ **To call up the Options submenu:** press the left-hand Touch Control.

▶ **To exit the Options submenu:** press the back button ↩.

The following functions may be available on the Options submenu, for example:

- Navigation: selecting and adjusting zoom, route guidance and map settings
- Resetting the trip odometer
- Resetting the trip computer From start
- Resetting the trip computer From reset
- Resetting the ECO display values

Changing colour settings on the Understated menu

▶ Call up the Understated menu via the driver's display menu bar.

▶ **To call up the colour list:** press the left-hand Touch Control.
The colour list on the Understated menu will appear.

▶ **To select colour settings:** swipe upwards or downwards on the left-hand Touch Control and select the desired colour setting.

ⓘ If you do not carry out any operations within a limited time after opening the colour list, the view will switch back to the default view of the Understated menu.

▶ **To exit the colour list:** press the back button ↩.

ⓘ Depending on the equipment, the selected colour setting will be adopted for the ambient lighting and the MBUX multimedia system. If you select the Understated menu on the driver's display, the content in the MBUX multimedia system will also be made smaller.

Calling up the Service menu

Driver's display:

→ Service

The current status of the vehicle is shown in the Service menu.

▶ **To call up the menu:** press the left-hand Touch Control.

The following display content is available on the Service menu (equipment-dependent):

- Information about how many messages are in the message memory
- AdBlue: AdBlue® range and fill level
- Tyre pressure:
  - Restarting the tyre pressure loss warning system (→ page 603)
  - Checking the tyre pressure with the tyre pressure monitoring system (→ page 601)
  - Restarting the tyre pressure monitoring system (→ page 602)
- ASSYST PLUS: calling up the service due date (→ page 552)
- Engine oil level: checking the engine oil level (→ page 29)
- Coolant indicator
- **Mercedes-AMG vehicles:** Temperature display (transmission oil, engine oil and coolant)

The following functions are available on the Options submenu:

- Tyre pressure (→ page 601)
- Message memory (→ page 755)

Calling up the assistant display (Assistance menu)

Driver's display:

→ Assistance

Various driver assistance systems and navigation instructions are shown on the assistant display.

▶ **To call up the display:** select Assistance on the driver's display.

Active Distance Assist DISTRONIC display on the assistant display (example)

In vehicles with the Driving Assistance Package, the following displays may vary depending on the driving situation:

- The navigation instructions in the left-hand display section
- The traffic light view in the right-hand display section
- The display of the driver assistance systems
- The level of detail on the assistant display

In vehicles without the Driving Assistance Package, your lane and the vehicle in front will be displayed.

The following status displays are available on the assistant display:

- Green: pedestrian detection active
- Grey: pedestrian detection enabled
- Green radar waves next to vehicle: Blind Spot Assist is enabled and ready for operation
- Grey radar waves next to vehicle: Blind Spot Assist is enabled but not ready for operation

The content on the assistant display will adapt to the following situations:

- Number of lanes detected
- Change of direction, e.g. lane change
- Current road conditions
- Road users detected

ⓘ The assistant display will not display other detected obstacles with the exception of road users.

The following functions are available on the Options submenu:

- Start route guidance
- With active route guidance: end route guidance
- Call up previous destinations and favourites
- Start new route guidance to a recent destination
- Start new route guidance to a favourite

Calling up displays on the Sport menu

Driver's display:

→ Sport

The Sport menu provides information about the engine data of the vehicle.

ⓘ When you call up the Sport menu on the menu bar of the driver's display, the menu colour setting will automatically be applied to the MBUX multimedia system.

▶ **To call up the menu:** press the left-hand Touch Control.

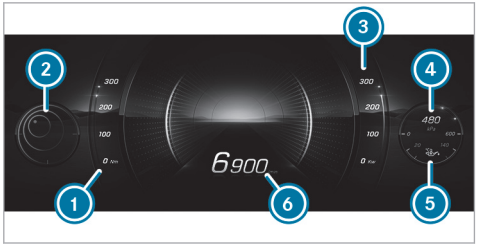

1. Current torque
2. G-meter
3. Current power output
4. Boost pressure
5. Engine oil temperature
6. Engine speed

Calling up displays on the Sport menu

Requirements

- For Mercedes-AMG vehicles only.

Driver's display:

→ Sport

The Sport menu displays information about the engine data, the setup and the temperature of the vehicle.

▶ **To call up the menu:** swipe to the left or right on the left-hand Touch Control.

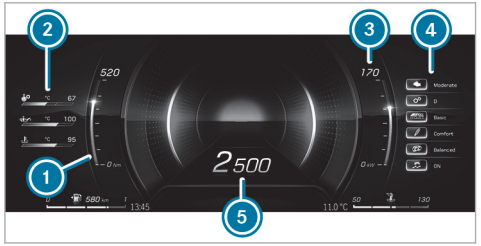

1. Current torque
2. Temperature (transmission oil temperature, engine oil temperature, coolant temperature)
3. Current power output
4. Setup (drive position, transmission position, AMG DYNAMICS, suspension tuning, exhaust system, ESP®)
5. Engine speed

ⓘ Depending on the vehicle equipment, AMG-specific content regarding temperature, setup and engine data will be displayed. The settings for the setup display content can be configured either via the buttons on the multifunction steering wheel or via the MBUX multimedia system (→ page 256). You can also activate or deactivate ESP® using the steering-wheel button or via the MBUX multimedia system.

Calling up displays in the Sport menu (plug-in hybrid)

Driver's display:

→ Sport

The Sport menu provides additional information about the operating energy as well as the recuperated power of the vehicle.

ⓘ When you call up the Sport menu on the menu bar of the driver's display, the menu colour setting will automatically be applied to the MBUX multimedia system.

▶ **To call up the menu:** press the left-hand Touch Control.

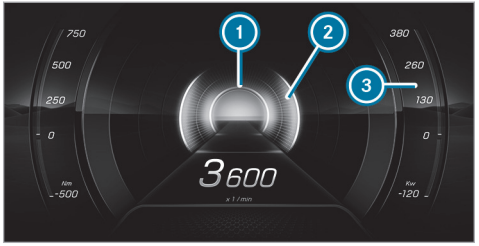

1. Display area for recuperated power (recuperation)
2. Display area for output
3. Additional display area for output

Configuring settings on the Supersport menu

Requirements

- For Mercedes-AMG vehicles only.

Driver's display:

→ Supersport

▶ **To select display content:** swipe upwards or downwards on the left-hand Touch Control.

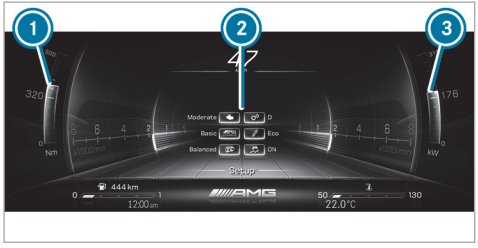

1. Current torque
2. Centre display content (example: setup)
3. Current power output

ⓘ The displays for the current torque 1 and current power 3 vary depending on the display content in the centre display area.

The centre display section 2 of the Supersport menu shows the following display contents:

- Gear display
- Temperature display (transmission oil, engine oil, coolant)
- Engine data
- Setup
- G-force
- Trip and total distance
- Distance From start and From reset
- Consumption
- Audio
- Navigation

ⓘ Depending on the vehicle equipment, AMG-specific content regarding temperature, setup and engine data will be displayed. The settings for the setup display content can be configured either via the buttons on the multi-function steering wheel or via the MBUX multimedia system (→ page 256).

Calling up the Track Pace menu

Requirements

- For Mercedes-AMG vehicles only.

Driver's display:

→ TRACK PACE

The Track Pace function is intended for use on designated race tracks. Do not use this function on public roads, and adapt your driving style to your personal capabilities and the ambient conditions.

The following options will be displayed on the TRACK PACE menu:

- G-meter
- Race track selected
- Braking and acceleration procedure
- Gear currently selected

Displays on the Track Pace menu (example)

1. G-meter
2. Centre display content (example: gear display)
3. Telemetry display (example: selected race track)

▶ **To call up the menu:** press the left-hand Touch Control.

The display content of the TRACK PACE menu will adapt to the selected settings on the central display:

- Gear display
- Braking points
- Acceleration
- Quarter-miles
- Race track selected on the central display
- Current race
- Record route

While the vehicle is in motion, the G-meter shows the forces that are exerted on the vehicle occupants both laterally and in the direction of travel. The maximum values appear in red in the coordinate system.

Calling up navigation instructions on the driver's display

Driver's display:

→ Navigation

▶ **To call up the menu:** press the left-hand Touch Control.

Changing the scale of the selected map view

1. Distance to the change of direction
2. Road to which the change of direction leads
3. Display of traffic incident
4. Currently selected route
5. Indicator showing vehicle's current position
6. Change-of-direction symbol
7. Recommended lane (white)
8. Lane not recommended (grey)
9. Current lane

ⓘ The level of detail in the navigation instructions in the left-hand display section may vary.

▶ **To zoom in and out on the map directly:** swipe upwards or downwards on the left-hand Touch Control.

ⓘ If no operation is performed within a short time of the autozoom being activated, the set map scale of the map view already selected will appear.
You can set the permanent map scale display in the MBUX multimedia system (→ page 482).

The following functions are available on the Options submenu:

- With active route guidance: end route guidance
- Select route guidance
- Map settings

ⓘ If the current route guidance is ended on the Navigation menu of the driver's display, it will also be ended in the MBUX multimedia system.

On the Options submenu, you can use other functions in the Destinations and Map settings categories.

You can use the following functions in the Destinations category:

- Call up previous destinations and favourites
- Start new route guidance to a favourite

ⓘ The two options Work and Home will be displayed in Favourites even if no address is stored.

You can use the following functions in the Map settings category:

- Activate auto zoom
- Set the map view, satellite view and route overview.

The following map views are available on the Navigation menu:

- Entire route
- 2D direction of travel
- 2D north-up
- 3D map

Head-up display

Function of the head-up display

The head-up display projects various content into the driver's field of vision, for example.

You can use the head-up display menu bar to select different contexts, e.g.:

- **Mercedes-AMG vehicles:** Supersport
- **Mercedes-AMG vehicles:** TRACK PACE
- **Mercedes-AMG vehicles:** RACE START
- **Mercedes-AMG vehicles:** Race
- Minimal
- Sport
- Standard
- Settings
- Head-up display on/off

Head-up display content with navigation (6x2°)

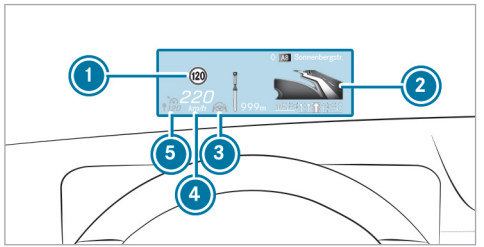

1. Detected instructions and traffic signs
2. Navigation instructions (distance to the next route event)
3. Steer Assist status
4. Current speed
5. Set speed in the driving system (e.g. Active Distance Assist DISTRONIC)

System limits

Visibility is particularly influenced by the following conditions:

- Seat position
- Image position setting
- Light conditions
- Wet road surfaces
- Objects on the display cover
- Polarisation in sunglasses

You can watch an animation on this topic via the following link:

Operating the head-up display

Selecting display content of the head-up display via the menu bar of the driver's display

▶ Press the main menu button [⌂] on the left.

▶ **To select the menu bar of the head-up display:** swipe upwards on the left-hand Touch Control.

Switching between display content on the head-up display

▶ Swipe to the left or right on the left-hand Touch Control.
A preview of the selected display content will appear on the head-up display.

▶ **To confirm:** press the [OK] button.

Switching back to the driver's display

▶ Press the [↩] or [⌂] button.

Setting the position and brightness

- Swipe to the left or right on the left-hand Touch Control and select Settings on the menu bar of the head-up display.
- Press the left-hand Touch Control.
  The current position and brightness settings will be displayed as graphics on the head-up display as well as on the driver's display.
- **To adjust the position:** swipe upwards or downwards on the left-hand Touch Control.
- **To adjust the brightness:** swipe to the left or right on the left-hand Touch Control.
  The settings configured for position and brightness will be saved automatically.
- Press the [↩] or [OK] button to exit the settings.

Switching the head-up display on/off

Driver's display:

Switching on

- Swipe upwards on left-hand Touch Control.
- Press left-hand Touch Control [OK].

Switching off

- Swipe upwards on left-hand Touch Control.
- Swipe on the left-hand Touch Control and select Head-up display.
- Press left-hand Touch Control [OK].

Vehicles with a 48 V on-board electrical system

ⓘ Mercedes-AMG vehicles: this function is not available for the A45 models.

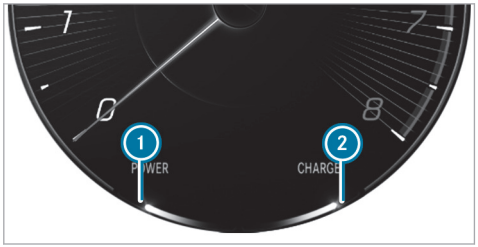

① Electric drive support
② Recuperation behaviour of the electric motor

ⓘ Due to various system limits, the values displayed may temporarily differ slightly from the actual value.

Function of the power meter

1. Start of the POWER display range
2. End of the POWER display range
3. Current state of charge of the high-voltage battery
4. Maximum recovered energy
5. Start of the display range of the recovered energy

The power meter has the following functions:

- In electric mode, area 1 – 2 shows what percentage of the electrical drive is currently being used. The combustion engine is switched on at a percentage of 100%. In boost mode, the electrical power assistance of the drive is displayed.
- The area 4 – 5 shows the recuperation and charging behaviour using the combustion engine.

ⓘ Due to various system limits, displayed value 4 may temporarily differ slightly from the actual value.

Overview of status indicators on the driver's display

The status indicators for the driving and driving safety systems can be found in display sections 1 to 4.

- Pedestrian detection (on assistant display only)
- Active Parking Assist is available (→ page 364)
- Active Parking Assist has detected a parking space (→ page 364)
- Parking Assist PARKTRONIC deactivated (→ page 361)

- Cruise control (→ page 315)
- LIM Limiter (→ page 316)
- Active Distance Assist DISTRONIC (→ page 318)
- Specified distance for Active Distance Assist DISTRONIC (→ page 318)
- OFF Active Brake Assist switched off (→ page 334)
- Active Brake Assist impaired or not functioning (→ page 334)
- Active Steering Assist (→ page 327)
- Active Lane Keeping Assist (→ page 345)
- Active Blind Spot Assist (on assistant display only)
- Blind Spot Assist (on assistant display only)
- READY Plug-in hybrid operation activated
- Haptic accelerator pedal (→ page 247, 244)
- ECO start/stop function (→ page 241)
- HOLD HOLD function (→ page 311)
- Adaptive Highbeam Assist (→ page 204)
- Adaptive Highbeam Assist Plus (→ page 205)
- 120 km/h Maximum permissible speed exceeded (for certain countries only)
- Active Stop-and-Go Assist
- Slippery road surface warning

Vehicles with Speed Limit Assist: detected instructions and traffic signs (→ page 335)

Vehicles with Traffic Sign Assist: detected instructions and traffic signs (→ page 338)

Important information from other driving systems may briefly appear over the traffic signs displayed.

Overview of status indicators on the driver's display (Mercedes-AMG vehicles)

The status indicators for the driving and driving safety systems can be found in display sections 1 to 6.

ⓘ The number, positions and presentation of the status indicators on the driver's display depend on which systems are activated or deactivated.

Depending on the vehicle equipment, Mercedes-AMG vehicles may have the following status indicators:

- Pedestrian detection (on assistant display only)
- Active Parking Assist is available (→ page 364)
- Active Parking Assist has detected a parking space (→ page 364)
- Parking Assist PARKTRONIC deactivated (→ page 361)
- Cruise control (→ page 315)
- LIM Limiter (→ page 316)
- Active Distance Assist DISTRONIC (→ page 318)
- Specified distance for Active Distance Assist DISTRONIC (→ page 318)
- Active Brake Assist switched off (→ page 334)
- Active Brake Assist impaired or not functioning (→ page 334)
- Active Steering Assist (→ page 327)
- Active Lane Keeping Assist (→ page 345)
- Active Blind Spot Assist (on assistant display only)
- ECO start/stop function (→ page 241)
- HOLD HOLD function (→ page 311)
- Adaptive Highbeam Assist (→ page 204)

  Adaptive Highbeam Assist Plus (→ page 205)
- 120 km/h! Maximum permissible speed exceeded (for certain countries only)
- Active Stop-and-Go Assist
- Slippery road surface warning
- Engine operating temperature warning lamp (→ page 237)

Vehicles with Speed Limit Assist: detected instructions and traffic signs (→ page 335)

Vehicles with Traffic Sign Assist: detected instructions and traffic signs (→ page 338)

Important information from other driving systems may briefly appear over the traffic signs displayed.

Notes on operating safety

For your own safety, always observe the following points when operating mobile communications equipment and especially your voice control system:

- Observe the legal requirements for the country in which you are driving.
- If you use the voice control system in an emergency your voice can change and your telephone call, e.g. an emergency call, can thereby be delayed.
- Familiarise yourself with the voice control system functions before starting the journey.

ⓘ **The voice control system does not replace the Owner's Manual.**
The answers from the voice control system do not provide the complete scope of information contained in the Owner's Manual. The voice control system also does not give detailed warning or damage information. Therefore read the Owner's Manual so that you are fully informed about the functions and the safe operation of the vehicle.

Operation

Function of the MBUX Voice Assistant

You can watch an animation on this topic via the following link:

Using the MBUX Voice Assistant, vehicle functions and various areas of the MBUX multimedia system can be operated by voice input, e.g. Navigation or Telephone. The MBUX Voice Assistant is operational about half a minute after switching on the vehicle and can be operated from all seats (depending on the special equipment).

Conducting a dialogue

Requirements

- Voice activation is activated in the multimedia system (→ page 400).
- For corrections during output, the Voice barge-in option must be activated in the multimedia system (→ page 400).

Starting a dialogue

▶ Say Hey Mercedes to activate the MBUX Voice Assistant.

or

▶ Press the button on the multifunction steering wheel.
A wave appears in the MBUX multimedia system. The dialogue can be started.

For the dialogue with the MBUX Voice Assistant, you can use complete sentences of colloquial language as voice commands. Voice activation can also be combined directly with a voice command, e.g. Hey Mercedes, how warm is it outside?

Interrupting the dialogue

▶ During the dialogue say Pause.
The dialogue is interrupted.

▶ Say Hey Mercedes to continue the dialogue.

Correcting an entry

▶ During the dialogue say Correction.

or

▶ Interrupt the system's voice output.

Changing dialogue level

- During the dialogue, say **Back**.
  The MBUX Voice Assistant jumps back to the previous dialogue step.
- During the dialogue, say **From the beginning again**.
  The MBUX Voice Assistant jumps to the highest dialogue level.

Navigating in the selection list

If a voice command does not achieve a clear result, a selection list is shown.

- Say the line number or the content to select an entry or to have further details shown.
- Say **Next page** or **Previous page** to browse the selection list.

Calling up help

- **For information about the MBUX Voice Assistant:** say **Hey Mercedes, what can you do?**
- **Current application:** say **Help**.
  You will receive suggestions and information about operation of MBUX Voice Assistant for the current application.
- **Specific function:** call up the voice command for the required function, for example with **Hey Mercedes, I need help with the radio.**
- **Digital Owner's Manual:** say **Show me the Owner's Manual**.
  The full extent of the Digital Owner's Manual is available on the media display when the vehicle is stationary.

Overview of the operable functions of the MBUX Voice Assistant

You can use the MBUX Voice Assistant to operate the following functions depending on the vehicle equipment:

- Telephone
- Text message and e-mail
- Navigation
- Radio and media
- Vehicle functions
- Online functions

Full functionality of the voice control system is only available for you with activation of online voice control (→ page 400).

Information on the language setting

You can change the language of the MBUX Voice Assistant via the system language settings (→ page 436). If the set system language is not supported by the MBUX Voice Assistant, English will be selected.

Setting functions of MBUX Voice Assistant using the multimedia system

Multimedia system:

→ [⌂] ▸▸ Settings ▸▸ System ▸▸ Voice assistant

Switching voice activation of MBUX Voice Assistant on or off

- Select Hey Mercedes.
  When the function is active, the **Hey Mercedes** voice command can activate the dialogue.

Switching direct commands on or off

- ▶ Select ⚙.
- ▶ Activate or deactivate the function.
  If the function is active, some commands can be used without Hey Mercedes, for example Next track.

Switching voice activation for individual seats on or off

- ▶ Select ⚙.
- ▶ Switch the function for the desired seats on or off.

Switching voice interruption on or off

- ▶ Select Further settings.
- ▶ Select Voice barge-in.
  If the function is active, a command can be interjected during voice output of the system.

Switching proactivity on or off

- ▶ Select Further settings.
- ▶ Select the desired situation, e.g. Activate your profile or Don't forget your phone.
  When the function is active, the voice assistant proactively provides information in specific situations.

Activating or deactivating online voice control

ⓘ Online voice control is activated at the factory.

- ▶ Select Online recognition.
- ▶ Activate or deactivate the function.
  If the function is activated and a Mercedes me user account is linked to the vehicle, additional results are available through the provision of external information, e.g. information on POIs. By clicking the symbol in the wave, more information about the online voice control can be displayed.

Activating or deactivating contacts for online use

- ▶ Select Contact upload for online recognition.
  When the function is active, contacts will be found more easily and accurately using voice input.

Using MBUX Voice Assistant effectively

Notes on optimum use of the MBUX Voice Assistant

- The MBUX Voice Assistant is operational half a minute after switching on the vehicle and can be operated from all seats, depending on the equipment installed. The system recognises from which seat the command was spoken and performs actions according to the seat position.
- When a dialogue is ended, the MBUX Voice Assistant continues to be active for as long as the wave is displayed in the multimedia system. You can say another voice command without saying Hey Mercedes.
- Using the direct command Change language to English, the system language can be changed to English without Hey Mercedes. Direct commands must be activated for this.
- If a user profile has been stored and is active, the MBUX Voice Assistant can make suggestions based on the habits of the user. If the voice commands are not clear, the system

selects an action. The action can be corrected with a new voice command.

Say **Hey Mercedes, load my personal profile**, to activate the profile. The user's voice must first be taught in by the system and assigned to a profile.

Further information on user profiles (→ page 421).

- With the MBUX Voice Assistant, incoming calls can be accepted or rejected without the keyword **Hey Mercedes**.

Information on the MBUX online voice assistant

The online voice control facilitates recognition and thanks to external information makes additional results available.

Therefore, Mercedes-Benz recommends that you activate online voice control (→ page 400).

You will need a Mercedes me user account for this. If you do not yet have a user account you must create one and connect it with your vehicle (→ page 520).

Then call up your Mercedes me user account. The Mercedes me services are shown and can be activated (→ page 520).

By clicking on the symbols displayed in the wave, further information on the online status is displayed.

When online voice control is active, additional functions are available such as:

- Weather
- General knowledge
- Public holidays and school holidays
- Smarthome
- Messages
- Time, date and time zones
- Pocket and currency calculator
- Football results and fixture lists
- Share prices
- Calendar
- ChitChat
- Horoscope
- Geo Quiz

ⓘ The availability of these functions is country and equipment-dependent.

ⓘ Text content is taken from Wikipedia in accordance with the CC BY-SA 3.0 licence.

Essential voice commands

Notes on voice commands

You can watch an animation on this topic via the following link:

It is not necessary to use exact voice commands to call up a specific function. The MBUX Voice Assistant also understands you when you use your colloquial speech. Some examples are listed below. For some languages however these examples are only available to a limited extent.

Examples of voice commands:

- Navigation (→ page 403)
- Telephone (→ page 403)
- Radio and TV (→ page 403)
- Media player (→ page 403)
- Messages (→ page 404)

- Vehicle functions (→ page 404)
- Online functions (→ page 405)

Examples of navigation voice commands

You can operate the navigation system using the MBUX Voice Assistant. The following list offers just a small selection of the possible navigation commands. You will receive additional suggestions if you say Help for navigation.

- Drive me home.
- Where is the nearest service station?
- Is there a service area along the route?
- Set Covent Garden as intermediate destination.
- Cancel the route guidance.
- Show my last destination.
- I want to buy juice.
- Search for an Asian restaurant, but not Japanese, in South London.

Examples of telephone voice commands

You can operate phones connected with the MBUX multimedia system using the MBUX Voice Assistant. The following list offers just a small selection of the possible telephone commands. You will receive additional suggestions if you say Help for phone.

- Call Peter Miller on the mobile phone.
- Dial 0711 17 0.
- Call my father.
- Accept call
- Reject call
- Search for the contact Peter Miller.
- Switch to address book
- Show me the incoming calls.
- Switch phone

Examples of radio and TV voice commands

Depending on the vehicle equipment, you can operate the radio and TV using the MBUX Voice Assistant. The following list offers just a small selection of the possible radio or TV voice commands. You will receive additional suggestions if you say Help for radio or Help for TV.

- Play the radio station Heart FM.
- Next station.
- Previous station.
- Show me the list of radio stations
- Save the station
- What am I listening to?

Examples of media voice commands

You can operate connected media sources and online music using the MBUX Voice Assistant. The following list offers just a small selection of the possible media voice commands. You will receive additional suggestions if you say Help for media or Help for player.

- Play Michael Jackson.
- Play "Yellow Submarine' by the Beatles.
- Next track.
- Previous track.

- Play similar track.
- Repeat this track.
- Switch on random playback.
- Mute the music.
- Switch to USB.

Examples of message voice commands

Messages can be created, edited and listened to using the MBUX Voice Assistant. The following list offers just a small selection of the possible message voice commands. You will receive additional suggestions if you say Help for messaging.

- Write a text message to Jane Doe: When will the next meeting take place?
- Show me my new e-mails.
- Write an e-mail to Jane Doe.
- Read me my new text messages.
- Show all new text messages.
- Write an e-mail to John Doe in English

Examples of vehicle voice commands

You can operate vehicle settings and vehicle functions using the MBUX Voice Assistant. The following list offers just a small selection of the possible vehicle voice commands.

ⓘ If no seat is mentioned for commands, the action is carried out automatically for the seat from which the command was spoken or for the function which is closest to that seat.

- Switch the seat heating to level 2.
- My feet are cold.
- Start the Refresh programme.
- Switch the massage function on.
- I would like to set the ambient light to blue
- Switch on the reading lamp.
- Turn off the rear light.
- Open all the windows.
- Switch the driver display to 3D.
- How fast can I drive here?
- Tell me my next service appointment
- How warm is it outside?

Information about the vehicle can also be requested:

- Information about individual items of the vehicle equipment
  - Hey Mercedes, which massage programmes do you have?
  - Hey Mercedes, do I have Blind Spot Assist?
  - Hey Mercedes, where is the warning triangle?
- Information about functioning of the systems and components installed in the vehicle
  - Hey Mercedes, what is DISTRONIC?
  - Hey Mercedes, what do I need ESP for?
  - Hey Mercedes, what is MBUX?
- Information about operating the systems and components installed in the vehicle
  - Hey Mercedes, how do I connect my smartphone?
  - Hey Mercedes, how can I turn on the main beam headlamps?

- Hey Mercedes, how do I stop the ionization function?

You can also use the vehicle voice commands to directly call up the menus for the plug-in hybrid settings and operate the corresponding vehicle functions.

- "Display the energy flow."
- "Switch to charging settings."
- "Activate pre-entry climate control."
- "Where is the nearest charging station?"
- "How far can I still drive?"
- "Set the departure time to tomorrow morning at 8 am."

Examples of online functions

Depending on the country, language and vehicle equipment, additional functions are available when online voice control is active. The system accesses external information and can, as a result, answer general knowledge questions and make calculations, for example.

- Is the sun shining in Manchester?
- Is it raining at my destination?
- What are the skiing conditions on the Zugspitze?
- What's the time in Sydney now?
- In which country do you pay with dollars?
- How many Swiss franks make 25 euros?
- How long now until the holidays?
- What day is it tomorrow?
- What is 20 % of 29?
- What does my horoscope say?
- What is the price of Mercedes-Benz Group shares?
- Let's play Geo Quiz.
- I'm bored.
- Who is the current prime minister?
- What do you know about the Globe Theatre in London?
- Who painted the picture "The Scream"?
- What's the status in the Premier League?
- Create a calendar entry tomorrow at 9 am.
- What's my next task?
- Tell me a joke.
- How many languages do you speak?
- What is your favourite animal?
- Are there any updates?
- Is the light still on in the kitchen?
- Switch off all the devices in my house.
- Please set the temperature in the living room to 24 degrees.

Direct command examples

With direct commands, some functions can be operated without first saying the voice command Hey Mercedes. To use direct commands, the function must be activated in the multimedia system (→ page 400).

- Next TV channel
- Previous TV channel
- Next radio station
- Previous radio station
- Next station
- Previous station

- Next track
- Previous track
- Start dashcam recording
- Stop dashcam recording
- Show the map
- 3D map
- 2D map
- Align map to north
- Align map in direction of travel
- Show all routes
- Show traffic
- Navigate to work
- Navigate home
- Repeat driving instruction
- Cancelling route guidance
- Change language to English

Overview and operation

Overview of the MBUX multimedia system (Mercedes-AMG vehicles)

WARNING Risk of distraction from information systems and communications equipment

If you operate information systems and communication devices integrated in the vehicle when driving, you could be distracted from the traffic situation. This could also cause you to lose control of the vehicle.

- Only operate this equipment when the traffic situation permits.
- If you cannot be sure of this, stop the vehicle whilst paying attention to road and traffic conditions and operate the equipment with the vehicle stationary.

You must observe the legal requirements for the country in which you are currently driving when operating the multimedia system.

NOTE Increased surface temperature due to direct sunlight on the central display

The surface of the central display is very dark.

If the display is exposed to direct sunlight, the surface can become very hot.

- If the central display has been exposed to direct sunlight, allow it to cool down before touching it for a long time.

The functional equipment of your MBUX multimedia system may differ and depend on the following factors:

- Market
- National version

Functions and services provided by Mercedes-Benz and/or third-party providers may be deactivated at the end of the contractual period. There is therefore no entitlement to the continuous provision of functions and services.
The functions described may be changed, optimised or modified after this publication goes to press.

Mercedes-Benz therefore reserves the right to introduce changes in the following areas:

- Features
- Services
- Service aspects

For these reasons, descriptions and depictions relating to the MBUX multimedia system may, in some cases, differ for your vehicle.

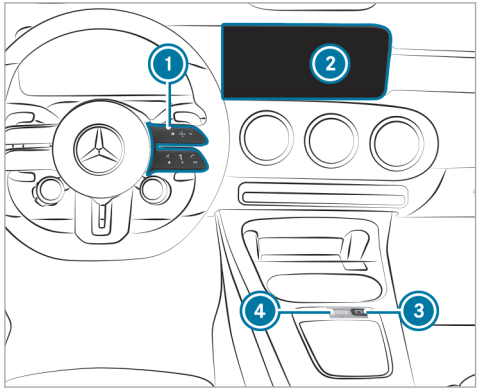

1. Touch Control and control panel for the MBUX multimedia system
   MBUX stands for Mercedes-Benz User Experience.
   - Operating Touch Control (→ page 412)
2. Media display with touch functionality
   - Home screen overview (→ page 411)
   - Operating the touchscreen (→ page 413)
3. Active parking assist (→ page 364)
4. Controller
   Press and hold: switches the MBUX multimedia system or media display on or off
   Press briefly: switches the mute function on/off
   Turn: adjusts the volume

ⓘ Alternatively, the MBUX voice assistant allows voice dialogue. Operation with natural speech starts after the wake-up call "Hey Mercedes" (→ page 399). You can start a voice navigation, for example, with the input of a three-word address from what3words.

ⓘ If the vehicle is fitted with the MBUX Interior Assistant, selected functions of the multimedia system can be operated contact-free. In addition, the reading light or search light can be switched on or off contact-free.

Numerous application, online services, services and apps are available for you. These can be called up via the home screen.

You can conveniently call up your favourites using the ★ button on the steering wheel. Quick-access in the home screen and in the applications serve to select functions more quickly.

If you use the learning function of the multimedia system, you will receive suggestions during operation of the most probable navigation destinations, media sources, radio stations and contacts. The configuration of the suggestions is completed in the system settings. You can compile your user profile from various vehicle settings and settings of the multimedia system. Some functions and services are protected by a PIN. You can teach in biometric procedures to identify yourself with these instead of the four-digit Mercedes me PIN.

The Notifications Centre collects incoming notifications, e.g. about an available software update. Depending on the type of notification it offers various actions. The call is made via the Control Centre.

With the global search, you can search on the home screen via categories, e.g. in the navigation, and on the Internet.

Anti-theft protection

This device is equipped with technical provisions to protect it against theft. More detailed informa-

tion about anti-theft protection can be obtained at a qualified specialist workshop.

Overview of the MBUX multimedia system

WARNING Risk of distraction from information systems and communications equipment

If you operate information systems and communication devices integrated in the vehicle when driving, you could be distracted from the traffic situation. This could also cause you to lose control of the vehicle.

- Only operate this equipment when the traffic situation permits.
- If you cannot be sure of this, stop the vehicle whilst paying attention to road and traffic conditions and operate the equipment with the vehicle stationary.

You must observe the legal requirements for the country in which you are currently driving when operating the multimedia system.

NOTE Increased surface temperature due to direct sunlight on the central display

The surface of the central display is very dark.

If the display is exposed to direct sunlight, the surface can become very hot.

- If the central display has been exposed to direct sunlight, allow it to cool down before touching it for a long time.

The functional equipment of your MBUX multimedia system may differ and depend on the following factors:

- Market
- National version

Functions and services provided by Mercedes-Benz and/or third-party providers may be deactivated at the end of the contractual period. There is therefore no entitlement to the continuous provision of functions and services.
The functions described may be changed, optimised or modified after this publication goes to press.

Mercedes-Benz therefore reserves the right to introduce changes in the following areas:

- Features
- Services
- Service aspects

For these reasons, descriptions and depictions relating to the MBUX multimedia system may, in some cases, differ for your vehicle.

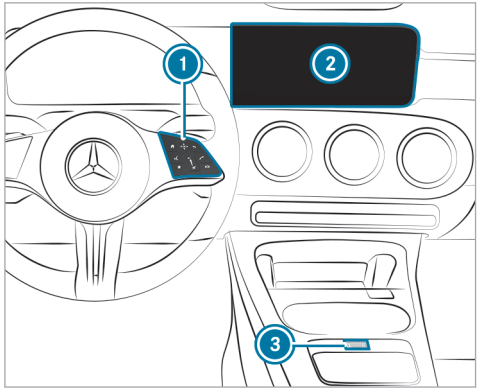

1 Touch Control and control panel for the MBUX multimedia system
MBUX stands for Mercedes-Benz User Experience.
- Operating Touch Control (→ page 412)

2 Media display with touch functionality
- Home screen overview (→ page 411)
- Operating the touchscreen (→ page 413)

3 Controller
Press and hold: switches the MBUX multimedia system or media display on or off
Press briefly: switches the mute function on/off
Turn: adjusts the volume

ⓘ Alternatively, the MBUX voice assistant allows voice dialogue. Operation with natural speech starts after the wake-up call "Hey Mercedes" (→ page 399). You can start a voice navigation, for example, with the input of a 3 word address from what3words.

ⓘ If the vehicle is fitted with the MBUX Interior Assistant, selected functions of the multimedia system can be operated contact-free. In addition, the reading light or search light can be switched on or off contact-free.

Numerous application, online services, services and apps are available for you. These can be called up via the home screen.

You can conveniently call up your favourites using the ★ button on the steering wheel. Quick-access in the home screen and in the applications serve to select functions more quickly.

If you use the learning function of the multimedia system, you will receive suggestions during operation of the most probable navigation destinations, media sources, radio stations and contacts. The configuration of the suggestions is completed in the system settings. You can compile your user profile from various vehicle settings and settings of the multimedia system. Some functions and services are protected by a PIN. You can teach in biometric procedures to identify yourself with these instead of the four-digit Mercedes me PIN.

The Notifications Centre collects incoming notifications, e.g. about an available software update. Depending on the type of notification it offers various actions. The call is made via the Control Centre.

With the global search, you can search on the home screen via categories, e.g. in the navigation, and on the Internet.

Anti-theft protection

This device is equipped with technical provisions to protect it against theft. More detailed informa-

tion about anti-theft protection can be obtained at a qualified specialist workshop.

You can watch an animation on this topic via the following link:

Home screen overview

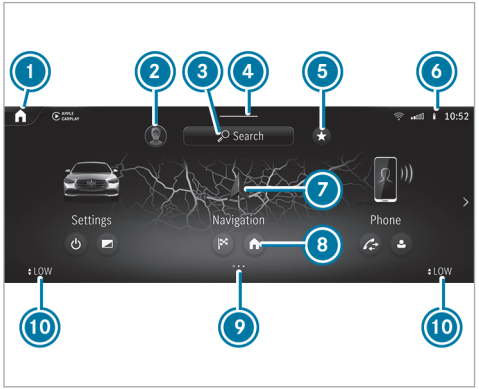

1. On the home screen: displays the first three applications
   In other displays: calls up the home screen
2. Calls up user profile settings and switches user
3. Uses the global search
4. Calls up the Control Centre: pull the bar down
5. Calls up favourites
6. Displays in the status line
7. Calls up applications
8. Quick-access to application
9. Index points for selected display area
10. Calls up the air conditioning menu

The following functions are called up in the Control Center:

- Notifications Centre
- Favourites
- Vehicle quick-access

In the image, the applications are arranged as a carousel. Pressing and holding on [⌂] arranges the applications in a grid. This view is also used by a smartphone, for example.

Touch Control

Operating Touch Control (MBUX multimedia system)

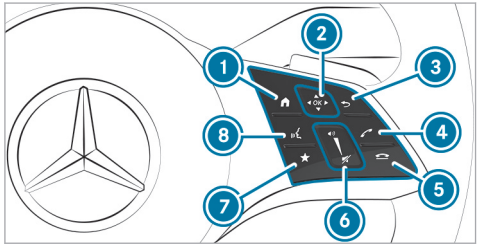

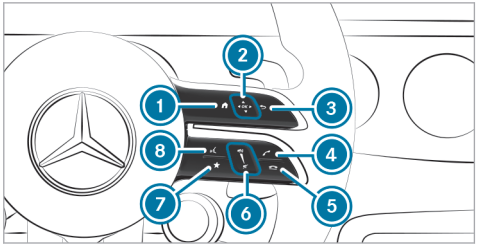

Mercedes-AMG vehicles

1. Shows the home screen
2. Touch Control
   ◀ ▲ ▶ ▼ swipe in the direction of the arrow (navigate)
   OK Press (confirm)
3. Returns to the previous display
4. Makes or accepts a call
5. Rejects or ends a call
6. To increase volume: swipe upwards
   To reduce volume: swipe down
   To switch off the sound: press
7. ★ Calls up favourites
8. Starts the MBUX Voice Assistant

ⓘ To operate Touch Control ② in the most effective way, use the tip of your thumb if possible.

You can navigate through menus and lists via the touch-sensitive surface of Touch Control ② using **a single-finger swipe**, for example:

- ▶ **To enter a character:** select a character using the keyboard and press on Touch Control ②.
- ▶ **To select a menu option:** scroll in a list and press Touch Control ②.
- ▶ **To move the digital map:** swipe in any direction.

Setting the sensitivity for Touch Control

Multimedia system:

→ ⌂ ▸▸ Settings ▸▸ System ▸▸ Control elements ▸▸ Touch Control sensitivity

- ▶ Select Fast, Medium or Slow.

Setting acoustic operational feedback for all control elements

Multimedia system:

→ [⌂] ▸▸ Settings ▸▸ System ▸▸ Control elements ▸▸ Acoustic feedback

The function is supported by the selection in a list.

- Set Off, Unleaded or Loud.
  If the function is activated you will hear a clicking sound when selecting control elements or when scrolling in a list. When the beginning or end of the list is reached you will hear another clicking sound.

Touchscreen

Operating the touchscreen

Tapping

- **To select a menu item or entry:** tap on a symbol or an entry.
- **To increase the map scale:** tap twice quickly with one finger.
- **To reduce the map scale:** tap with two fingers.
- **To enter characters with the keypad:** tap on a button.

Single-finger swipe

- **To navigate in menus:** swipe up, down, left or right.
- **To move the digital map:** swipe in any direction.
- **To use handwriting to enter characters:** write the character with one finger on the touchscreen.

Two-finger swipe

- **To zoom in and out of the map:** move two fingers together or apart.
- **To enlarge or reduce the size of a section of a website:** move two fingers together or apart.
- **To turn the map:** turn anti-clockwise or clockwise using two fingers.

Three-finger swipe

- **To call up the home screen:** swipe up with three fingers in an application.

Touching, holding and moving

- **To move the map:** touch the touchscreen and move your finger in any direction.
- **To set the volume on a scale:** touch the touchscreen and move the finger to the left or right.

Touching and holding

- **To save the destination in the map:** touch the touchscreen and hold until a message is shown.
- **To call up a global menu in the applications:** touch the touchscreen and hold until the Options menu appears.

Overview of the lower control panel in the centre console

1 Turn: adjusts the volume
Press: switches sound on or off

MBUX Interior Assistant

Notes on lasers and laser classification

WARNING Risk of injury from the camera's laser radiation

This product uses a classification 1 laser system. If the housing is opened or damaged, laser radiation may damage your retina.

- Do not open the housing.
- Always have maintenance work and repairs carried out by a qualified specialist workshop.

This device is a class 1 laser product in accordance with IEC 60825-1:2014 and DIN EN 60825-1:2014.

WARNING Risk of distraction from information systems and communications equipment

If you operate information systems and communication devices integrated in the vehicle when driving, you could be distracted from the traffic situation. This could also cause you to lose control of the vehicle.

- Only operate this equipment when the traffic situation permits.
- If you cannot be sure of this, stop the vehicle whilst paying attention to road and traffic conditions and operate the equipment with the vehicle stationary.

You must observe the legal requirements for the country in which you are currently driving when operating the multimedia system.

Overview of the MBUX Interior Assistant

If the vehicle is fitted with the MBUX Interior Assistant, selected functions of the multimedia system can be operated contact-free. In addition, the reading light or search light can be switched on or off contact-free.

The MBUX Interior Assistant can differentiate between driver and front passenger interactions.

The MBUX Interior Assistant recognises specific hand movements and a pose.

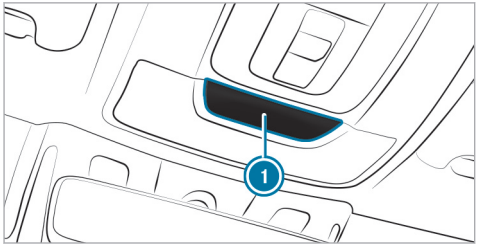

Example of camera location

Camera (1) is located in the overhead control panel.

System limits, display messages and notes for rectification

The system may be impaired or may not function in the following situations:

- The camera in the overhead control panel may heat up due to operating conditions. As a result the camera may switch off temporarily, particularly during longer periods of operation and at high outside temperatures.

  Do not touch or cover the camera and wait until the camera has cooled down and is available again.
- The camera is covered, dirty, misted up or scratched.

  Wait until the camera has cooled down before cleaning the camera lens.

  Clean the outside of the camera lens with a dry or damp cotton cloth. Do not use microfibre cloths. Do **not** remove the cover when cleaning.
- Recognition can be impaired by reflective clothing, an unfavourable colour of clothing or by accessories, for example.
- Clothing being worn (hat, shawl, scarf) may be limiting the detection range of the camera.

  Keep the camera's field of vision clear.
- The camera is not operational.

  Consult a Mercedes-Benz service centre.

Supported interactions

Interaction area	Interaction	Description
In front of the media display or above the touch-pad	Proximity to the control element	The MBUX Interior Assistant recognises a hand approaching a control element. Depending on the active application, the display will be adjusted in the media display. Some functions differentiate between driver and front passenger. No specific hand position is required.
Above the centre console	Defined pose	A favourite is called up with a defined pose.
Below the inside rearview mirror	Brief up and down movements	With brief up and down movements below the inside rearview mirror the reading light for the driver or the front passenger is switched on and off.
Above the front passenger seat	Stretching out a hand above the front passenger seat	By stretching out a hand above the front passenger seat the search light is switched on. If you withdraw a hand from this area, the search light is switched off again.

Operating functions by bringing your hand closer to the multimedia system

Requirements

- One of the following applications appears in the media display:
  - Seat settings with displays for the driver and front passenger seat, e.g. Seat
  - Home screen
  - Radio menu or media menu
  - Map in the navigation
  - Active Parking Assist
- Recognition occurs as your hand approaches to approximately 10 cm from the touchscreen.

Seat adjustments by the driver or front passenger

In the seat settings menu, the MBUX Interior Assistant detects proximity to various control elements of the multimedia system. In addition, the MBUX Interior Assistant detects from which seat the action emanates.

▶ When the seat settings are shown, move your hand towards the touchscreen.
The seat of the person operating, driver's seat or front passenger seat, is enlarged in the media display.

The appropriate control elements are preselected automatically.

▶ Either switch the function on and off directly or make further settings (depending on function).

Highlighting an application on the home screen

The MBUX Interior Assistant detects in which area your hand is in front of the touchscreen. The display of objects shown is adjusted to improve orientation.

▶ Move your hand towards the touchscreen.
The symbol for the application is enlarged. The quick-access applications will be highlighted.

▶ Continue operation and select a quick-access application, for example.

ⓘ Further information about the home screen (→ page 411).

Activating cover change in the radio menu and media menu

The MBUX Interior Assistant reduces the number of operating steps.

▶ Move your hand towards the touchscreen.
The current information, e.g. about the radio station, track and artist is hidden. Cover change is activated.

▶ Continue operation and select a cover.

▶ **To show current information again:** move your hand away from the touchscreen.

ⓘ More information on the radio menu (→ page 544) and the media menu (→ page 539).

Showing the navigation menu on the map

The MBUX Interior Assistant shows the navigation menu.

▶ Move your hand towards the touchscreen.
The navigation menu is shown.

▶ Continue operation and select a symbol.

▶ **To hide the navigation menu again:** move your hand away from the touchscreen.

ⓘ Further information on the navigation menu (→ page 451).

Showing operating symbols in the Active Parking Assist camera image (only from driver's seat)

The MBUX Interior Assistant facilitates quick-access for the driver to various camera views.

▶ When Active Parking Assist is shown, move your hand towards the touchscreen.
The camera operation symbols are displayed.

▶ Continue operation and display the desired front, rear, left and right camera views.

ⓘ Further information on the Active Parking Assist function (→ page 362).

Calling up favourites with the V pose

Requirements

- There is at least one favourite.
- The favourite has been connected with the MBUX Interior Assistant (→ page 423).
- The area for recognition of the favourite's pose (V pose) is above the centre console at the height of the climate control vents and the media display. Your hand should be at least 10 cm from the media display.
- The V pose is held for a brief time.

Calling up favourites

The driver and front passenger can connect two different favourites with the V pose.

ⓘ If a favourite has not yet been saved and connected with the MBUX Interior Assistant, the multimedia system will assist you.

▶ Position a hand above the centre console in the direction of the media display. The back of your hand is facing upwards. In doing so the index and middle finger are spread to form a V with the other fingers bent inwards. Briefly hold the V pose.
The favourite is called up.

Contactless switching on or off of the reading light for driver and front passenger

Requirements

- The function is available when it is dark.
- The hand movement takes place in the interaction area below the inside rearview mirror.

Briefly moving a hand up and down under the inside rearview mirror switches the reading light specifically for the driver or front passenger on or off.

▶ Move your hand up and down under the inside rearview mirror.
The reading light is switched on or off.

Switching the search light for the driver on or off with a hand movement

Requirements

- The function is available when it is dark.
- The hand movement takes place in the interaction area above the front passenger seat.
- The seat belt on the front passenger seat must **not** be inserted in the seat belt buckle.

Stretching out a hand over the front passenger seat switches a search light on for the driver when it is dark. Pulling the hand back switches the search light off again.

▶ **To switch on:** reach across the front passenger seat with a hand.
The search light is switched on for the driver.

▶ **To switch off:** take a hand back away from the front passenger seat.
The search light is switched off again.

Selecting settings for the MBUX Interior Assistant

Multimedia system:

→ ⌂ ▸▸ Settings ▸▸ System ▸▸ Interior assistant

▶ **To switch on full functionality of the MBUX Interior Assistant:** select On.
The option is activated ●.

▶ **To activate additional functions for reading and search lights:** select Including search and reading light.
When the option is switched on, the display button is activated.

The functions for the reading and search lights are activated in addition to the proximity functions.

▶ **To switch off the MBUX Interior Assistant:** select Off.
The option is activated ●.

User

Notes on user profiles

⚠ **WARNING** Risk of becoming trapped during adjustment of the driver's seat after calling up a driver profile

Selecting a user profile may trigger an adjustment of the driver's seat to the position saved under the user profile. You or other vehicle occupants could be injured in the process.

▶ Make sure that when the position of driver's seat is being adjusted using the multimedia system, no people or body parts are in the seat's range of movement.

If there is a risk of someone becoming trapped, immediately stop the adjustment process by:

▶ a) Pressing the warning message on the central display.

or

▶ b) Pressing a position button of the memory function or a seat adjustment switch in the driver's door.
The adjustment process is stopped.

The driver's seat is equipped with an anti-entrapment feature.

If the driver's door is open, the driver's seat will **not** be set after calling up the driver's profile.

Overview of user profiles

Requirements for use

- You have a Mercedes me user account.
- You have a Mercedes me PIN.
- You have agreed to the terms of use.
- The vehicle is linked to a Mercedes me user account.

ⓘ If one of the pre-requisites listed is missing or if no user profile has been selected, the data described in the following section will be saved in the vehicle as the standard setting. Standard settings can be changed by all vehicle users.

User profiles save personal settings. If the vehicle is used by several people, a person can change their profile settings without changing the settings of other users.

You can individualise a user profile in the vehicle using the set-up assistant or using the settings in your user profile. Some settings, e.g. the Mercedes me PIN and a profile photo are made in the Mercedes me App or in the Mercedes me Portal.

ⓘ If the user profile is downloaded while travelling, user profiles are not set up using the set-up assistant.

User-specific content and applications with personal data are protected by different levels of security (→ page 421).

To access protected content, the Mercedes me PIN and, depending on the vehicle equipment, biometric sensors are used.

ⓘ The security level is set by the multimedia system and calculated from the combination of all sensor inputs. Some security levels cannot be turned off.

ⓘ When a user profile is activated, the following personalised comfort systems, for example, can be adjusted or their settings loaded:

- Seat
- Ambient light
- Outside mirrors
- Climate control settings

If the user profile is activated when driving then the driver's seat position will not be adjusted.

User-specific content

Depending on the vehicle equipment you can, as a user, save the following settings, for example:

- Driver's seat, steering wheel and mirror settings
- Climate control
- Ambient light
- Radio (including station list)
- Suggestions and favourites

You can watch an animation on this topic via the following link:

Adding a user

Requirements

- The vehicle is stationary.

Multimedia system:

▶ Select ⊕ Add user.
A QR code is loaded.

▶ Scan the displayed QR code with the Mercedes me App or any QR code scanner on a mobile device. If the Mercedes me App is not yet installed on your mobile device, you will be directed to the store of your mobile device.

▶ Follow the steps in the Mercedes me App.
The vehicle is connected with your Mercedes me user account. This automatically creates your user profile in the vehicle.

You will be informed when your user profile is available.

When the vehicle is stationary, the set-up assistant starts automatically after user selection.

ⓘ When the user has been added, they can be selected (→ page 422).

Selecting user options

Multimedia system:

Protecting user-specific content and applications

If you add a new user, access protection is already activated for the user profile. The Mercedes me PIN and, depending on the vehicle equipment, biometric sensors are available for access. Biometric sensors in the vehicle must be taught in. The authentication process then takes all taught-in and available sensors into account.

The following user-specific content and applications are protected, for example:

- User selection and user profile settings
- Biometric sensors

  The teaching-in of biometric sensors.

  For teaching in and editing biometric recognition see the following section.
- Suggestions

  The data and determination of the most probable navigation destinations, media sources, radio stations, contacts and messages.
- ENERGIZING COACH

  The recorded health data and its evaluation.
- In-Car Office

  The calendar, the tasks and the e-mails.
- Parking service

  The payment transactions.
- Mercedes me Store

  The purchase of services.
- System activations of paid vehicle functions

In the following cases you will be prompted for authentication or re-authentication using a sensor or the Mercedes me PIN:

- When selecting a protected user profile
- When calling a function requiring special protection
- If biometric sensors provide insufficient or contradictory information
- If the multimedia system no longer trusts a sensor
- If the seat belt buckle and the door are opened at the same seat and a function requiring special protection is called up
- When the vehicle is locked from outside

▶ Select Protect content.

▶ Switch Access protection on or off.

ⓘ When access protection is switched off, your user profile can be viewed from any seat and changes can be made.

ⓘ Access protection is switched on or off on a vehicle-specific basis.

ⓘ Please note that authentication is necessary for several functions such as In-Car Office and cannot therefore be completely switched off.

Setting up and editing biometric recognition

The biometric data models are saved in the sensors in the vehicle. If recognition has been set up,

this sensor serves as a contributory factor for authentication on the multimedia system.

▶ Select Protect content.

▶ Select Voice recognition.

ⓘ If necessary, authenticate yourself on the multimedia system.

Setting up voice recognition

▶ Speak the sentence shown on the media display and follow the voice assistant's instructions.
If voice recognition was successful, a message appears on the media display. You can unlock your user profile.

ⓘ Avoid background or disturbing noises during voice recognition.

Deleting biometric data

▶ Tap on 🗑, for example, behind Fingerprint recognition.

▶ Select Yes.

Calling up the set-up assistant

▶ Select Profile.

▶ Select Set-up assistant.

▶ Follow the directions from the set-up assistant.

Changing a user name or profile photo

▶ Select Profile.

▶ Select Change user name.

or

▶ Select Profile picture.

▶ Enter the user name or select a user image.

▶ Select Finished.

ⓘ You can store your photo in the Mercedes me user account using the app or in the portal. The photo will then be shown in the vehicle. In the vehicle itself, you can select other sample images instead of the photo.

Deleting a user profile

▶ Select Profile.

▶ Select Remove.

▶ Select Remove user profile.

ⓘ Your Mercedes me user account and your personal data will remain within the Mercedes me ecosystem.

Resetting the user profile to factory settings

▶ Select Profile.

▶ Select Reset.

▶ Select Yes.

ⓘ This resets the contents of the user profile to factory settings, but not the vehicle.

Selecting a user

Multimedia system:

ⓘ When you call up your driver profile, the driver's seat and the steering wheel can be set.

You can cancel the setting process with the following actions:

- Tap on the Tap here to cancel. message on the media display.
- Press one of the seat operating buttons in the driver's door.

▶ Select Select user.

▶ Select a user.

▶ When requested to do so, authenticate with the Mercedes me PIN or a taught-in biometric characteristic.
The user profile is loaded and activated.

ⓘ If you select Continue without selecting user, no specific settings for the user profile are loaded.

Synchronising user profiles

Requirements

- You have a Mercedes me user account.
- The vehicle is connected with your Mercedes me user account.

Multimedia system:

⇢ ⌂ ⏩ 👤 ⏩ Settings ⏩ Synchronisation

▶ Synchronise automatically .
When the vehicle is switched on or off, the data stored in the vehicle is automatically synchronised with the Mercedes me user accounts. This synchronization is done for all user profiles and is not profile-specific.

or

▶ Select Synchronise now.
After selecting this option, the data stored in the vehicle is synchronised with the Mercedes me user accounts.

ⓘ Not all user profile functions are available during synchronization.

ⓘ If the personalisation service in the vehicle is deactivated, only the following user profile master data is synchronised:

- Profile name
- Profile image
- Mercedes me PIN

Favourites

Overview of favourites

Favourites offer you quick access to frequently used applications. 100 favourites are available in total.

You can select favourites from categories or you add favourites directly from an application.

Calling up favourites

Multimedia system:

⇢ ⌂ ⏩ ★

▶ Alternatively, in the home screen pull down bar ④ in the centre of the status line (→ page 411).

▶ Select ★ in the Control Center.

Adding favourites

Multimedia system:

⇢ ⌂ ⏩ ★

Selecting favourites from categories

▶ Select ›.

▶ Select + Create new favourite.

▶ Select the category.

▶ Select a favourite.
The favourite is stored at the next available position.

▶ **All positions in the favourites are taken:** confirm the message shown.
A list shows all the favourites.

▶ Select a favourite to be overwritten.

Adding a favourite from an application

You can, for example, save a contact (example), or add an ENERGIZING COMFORT programme.

- **To save a contact as a global favourite:** select a contact (→ page 501).
- Press on a telephone number until a menu is shown.
- Select Save as favourite.
  The contact is added as a favourite.

Linking favourites with the MBUX Interior Assistant V pose

ⓘ If a favourite is linked to the V pose, you can call it up (→ page 418).

- Select [>].
- Select Driver or Passenger.
- Select the category.
- Select a favourite.
  If the favourite is linked with the V pose, a notification appears.

ⓘ The linked favourite pose can be activated or deactivated for the driver or front passenger.

Renaming favourites

Multimedia system:

- Press on a favourite until a menu is shown.
- Select Rename.
- Enter the name.
- Save the names.

Moving favourites

Multimedia system:

- Press on a favourite until a menu is shown.
- Select Move.
- Move the favourite to the new position.
- Tap on [✓].

Deleting favourites

Multimedia system:

- Press on a favourite until a menu is shown.
- Select Delete.
- Select Yes.

Resetting favourites

- In the menu, select Reset all favourites .
- Select Yes.

Notifications Centre

Overview of the Notifications Centre

The following communications are collected in the Notifications Centre:

- Communications which are generated by the vehicle or from the multimedia system.
- Communications which are received through the use of services.

The following notification types are available for you:

- Navigable destinations and routes
- Messages (text messages)
- Calendar entries and reminders, e.g. from In-Car Office

  This function is not available in all countries.

- System information, e.g. Important software update available. Confirm to start the update.
- Other notifications, e.g. from additional online services that can be subscribed to or emergency reports (e.g. tornado)

The Notifications Centre is in the Control Center.

Depending on the style set, newly received notifications are shown using a coloured dot.

Notifications are normally briefly shown as they are received. If you take no action, these are stored for future access in the Notifications Centre.

The notifications are sorted chronologically. The most recent notifications are at the top.

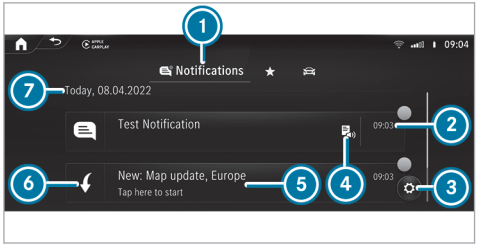

Example of a message

1. Calls up the Notifications Centre
2. Time message received
3. Calls up the settings
4. Display for available actions
5. Description of the notification and the issuing service
6. Symbol for notifications
7. Date of the received notifications

Depending on the type of notification, up to four different actions are available.

Examples of actions include:

- Reading aloud
- Placing a call
- Replying
- Calling up a web page
- Navigation

Some notifications, e.g. a navigation destination, are stored longer. Therefore, it is not necessary to carry out available actions directly upon receipt of the notifications. A route guidance can be started at a later time.

You can pin a notification so that this is not deleted automatically after a certain time (→ page 426).

Calling up notifications

Opening the Notifications Centre

▶ In the home screen pull down bar (4) in the centre of the status line (→ page 411). The Control Centre opens.

▶ Select [ ] in the Control Center.

Selecting a notification

- ▶ If several messages are available swipe up or down.
- ▶ Select an action.

Closing the Notifications Centre

- ▶ Select [↩].

Selecting actions for a notification

The following options are available:

- Select the action directly after a notification is received and shown.
- Select the action later after calling up in the Notifications Centre.

- ▶ Up to two actions available: select the action.
- ▶ More than two actions available: select [<].
- ▶ Select the action.
  The notification is still available.
- ▶ Close the actions with [>].

Editing notifications

- ▶ Call up the Notifications Centre
  (→ page 425).

Configuring settings

- ▶ Select [⚙] Settings .
- ▶ Select the service.
- ▶ Switch the options on or off.

The following options are available depending on the service:

- Allow notifications
- Display in notification centre
- Show notifications
- Switching Acoustic signals on or off
- External access

  The option allows an external service access to specific data, e.g. the current vehicle position. The detailed, approved information is shown with ⓘ.

If Allow notifications is switched off, the options cannot be selected with the exception of External access.

Pinning a notification

- ▶ Drag a notification to the right on the touchscreen.
  A pin appears.
- ▶ Tap on the pin.
  The notification is marked with a pin.

Deleting notifications

- ▶ Drag a notification to the left on the touchscreen.

or

- ▶ Select [🗑].
- ▶ Select Yes.
  All messages are deleted.

Global search

Global search overview

You can call up the global search on the home screen. You can input characters using the keyboard or the handwriting recognition. Alternatively, the MBUX voice assistant allows voice input.

The global search provides search results for the following categories:

- Navigation
- Entertainment
- Phone, In-Car Office

  In-Car Office is not available in all countries.
- Digital Owner's Manual
- Internet

The global search enables you to search for towns, roads and tourist attractions in the navigation category, for example.

The global search makes it possible to enter a three-word address (→ page 456).

If the search field is empty, you will first see smart suggestions in the Suggestions category.

As soon as a letter is entered, you will be shown the best hits in the All category. You will find further search results in the individual categories. Next to the category is the number of results.

After selecting a category you can select the search results within the category. When you select a search result, a detailed view is opened depending on the category.

Using the global search

Multimedia system:

→ [⌂] » [🔍] Search

In the Suggestions category up to six smart suggestions are displayed, even if no search entry has been entered yet.

▶ Enter the search term into the search field. As soon as a character is entered the All category is marked. Up to ten search results per category are displayed there.

In the other categories suitable search results for the entered search item are displayed.

ⓘ Alternatively, the MBUX Voice Assistant allows voice input using [🎤] or you switch to the handwriting recognition [✍] (→ page 430).

▶ **To end the search:** select [OK].

▶ **To show search results for a category:** select a category.

▶ **To accept the search result:** select the search result.
An action starts, e.g. a radio station is set or a detailed view is displayed, e.g. for a contact.

Switching the sound for the MBUX multimedia system on or off

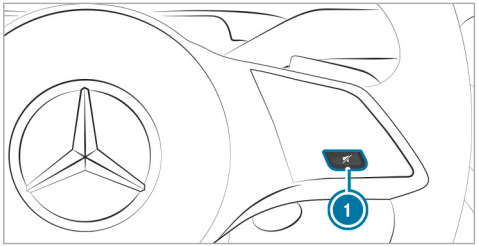

On the steering wheel

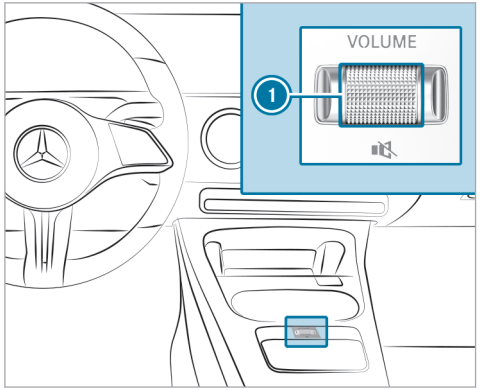

On the centre console

- **To switch off:** press button 1 on the steering wheel or controller 1 on the centre console. The current audio source is muted.

  The [🔇] symbol appears in the status line of the media display.

If you are listening to a radio station, for example, and switch off the sound then all media sources will be muted.

Traffic and navigation announcements can still be heard in this case. The MBUX voice assistant and telephony are also not affected.

Switching on

- Press button 1 on the steering wheel or controller 1 on the centre console again.

or

- Set the volume.

or

- The media source changes.

Setting the volume of the MBUX multimedia system

Adjusting with the button or controller

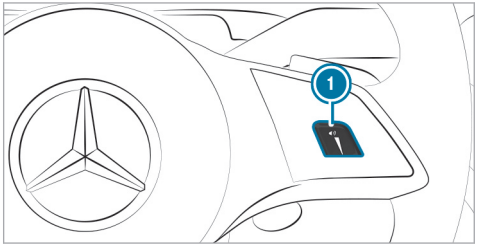

On the steering wheel

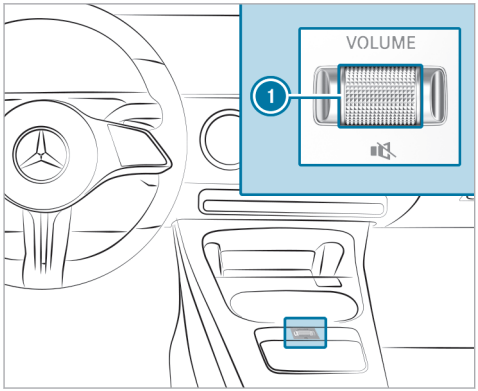

On the centre console

▶ **On the steering wheel:** press 1 [−] or [+].

or

▶ Swipe across button 1.
The volume of the current audio source in the foreground is set.

or

▶ **On the centre console:** turn controller 1.

Using the button or controller, the volume is adjusted for the following groups:

- Entertainment
- Ringtone
- Calls, for example phone calls
- Voice output, for example MBUX voice assistant
- Navigation announcements

ⓘ If you set the volume of the voice output to "0", for example, a minimum volume is automatically set when the MBUX voice assistant is next called up. The entertainment volume is automatically adjusted after the multimedia system is restarted.

Setting in the menu

▶ Press the [⌂] button on the right of the steering wheel.

or

▶ Select [⌂] on the touchscreen.
The home screen appears.

▶ Select Settings.

▶ Select System.

▶ Select Audio.

▶ Select a volume setting.

ⓘ The volume can be set for all groups except the entertainment volume.

▶ Set the volume.

The following settings are also available in the Assistance menu:

- Switching the navigation announcements on or off during a phone call.
- Reducing the entertainment volume while a navigation announcement is being issued.

Entering characters

Using the character input function

Requirements:

- **For the handwriting recognition read-aloud function:** the MBUX multimedia system is equipped with the MBUX voice assistant.

- The read-aloud function is available for the selected system language.
- The handwriting recognition read-aloud function is activated.

Enter the characters on the Touch Control or on the touchscreen. Character input can be started with a control element and resumed with another.

▶ When the keypad is shown, enter the characters by swiping and pressing on the Touch Control or by tapping on the touchscreen.

or

▶ If handwriting recognition has been selected, write the characters on the touchscreen.

Examples for character input include the global search, entering a navigation destination or the renaming of a favourite, for example.

The touchscreen supports character input with the following functions:

- Handwriting recognition offers character suggestions.
- If the read aloud function is activated for handwriting recognition then the entered characters are read aloud.

Entering characters on the touchscreen

Requirements

- If you wish to have the character input read aloud: the read aloud function of the handwriting recognition is switched on (→ page 432).
- An online connection is required for some functions.

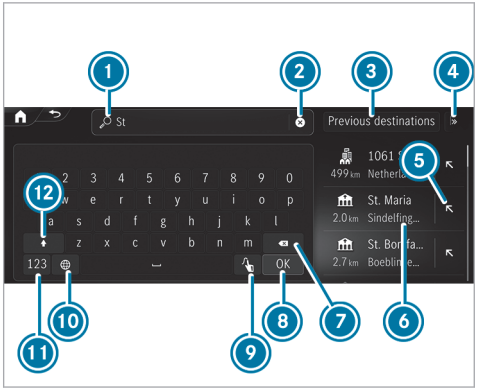

Character input with the keypad (destination entry)

1. Input line with current entry
2. Deletes an entry
2. Search result
3. Selects previous destinations
4. Displays and selects additional destination searches

⑤ Adopts the search result in the input line and continues the search
⑥ Search result
⑦ Deletes the last character entered
⑧ Hides the keypad
⑨ Switches to handwriting recognition
⑩ Sets the written language
⑪ Switches to digits and special characters
⑫ Switches to upper-case or lower-case letters

If available, selecting the [ ] symbol starts the MBUX Voice Assistant.

▶ Example: call up the navigation and enter a destination address (→ page 34).

▶ Briefly press on a character.
The character is entered in input line ①.

▶ Resume character input.

ⓘ The available editing functions depend on the editing task, the language set and the character level.

Entering alternative characters

▶ Press and hold on a character.

▶ Select the character.

Ending character input

▶ Hide keypad ⑧ .

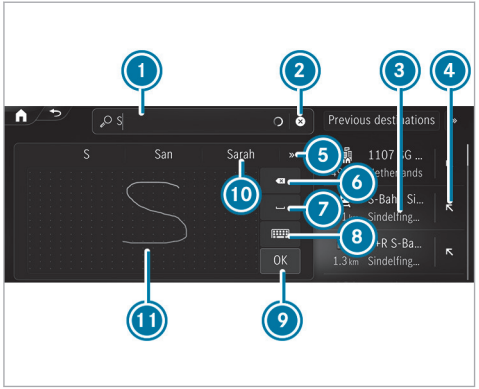

Example: entering characters with handwriting recognition
① Input line
② Shows suggestions during input
③ Accepts search result
④ Search result
⑤ Displays additional suggestions
⑥ Deletes the last characters entered
Pressing and holding deletes the entry
⑦ Enters a space
⑧ Switches to keypad entry
⑨ Accepts an entry
⑩ Shows suggestions during input
⑪ Writing area

If available, the [ ] symbol allows you to change to voice input.

▶ When the keyboard is displayed, select [ ].

▶ Write the character with one finger on the touchscreen. The letters can be written next to each other or above each other.
The character is entered in input line ①. Suggestions are shown in ⑩.

▶ Select one of the suggestions.

▶ If available, display additional suggestions with [<] or [>].

▶ **To end character entry:** press briefly on [ ].

Setting the keyboard and handwriting recognition for character entry

Requirements:
- The read-aloud function is available for the selected system language.

Multimedia system:
→ ⌂ ▸▸ Settings ▸▸ System ▸▸ Keyboards and handwriting

Setting the keyboard language

▶ Select Keyboard languages.
▶ Select one or more keyboard languages.

Setting the writing speed

▶ Select Handwriting recognition.
▶ Select an option, e.g. Medium.

Activating the read-aloud function

▶ Select Handwriting recognition.
▶ Activate Read out.
The letter that your write on the touchscreen is read aloud.

Activating handwriting recognition on the keyboard

▶ Select Handwriting recognition.
▶ Activate Handwriting recognition.
You can write characters directly on the keyboard.

Deleting the user dictionary

The user dictionary learns from your inputs and offers suggestions during character input. You can reset the user dictionary.

▶ Select Reset my dictionary.
▶ Select Yes.

System settings

Display

Configuring display settings

Multimedia system:
→ ⌂ ▸▸ Settings ▸▸ System ▸▸ Display

Adjusting the brightness

▶ Select Display brightness.
▶ Vehicles with a driver display and media display: adjust the display brightness of the driver display or media display.

Time and date

Setting the time zone

Multimedia system:
→ ⌂ ▸▸ Settings ▸▸ System ▸▸ Time and date

▶ Select Time zone.
The list of countries is displayed.

ⓘ If there are several time zones available in a country, these will be shown after the country is selected.

▶ Select a country and, if required, a time zone.
The time zone set is displayed after Time zone.

or

▶ Select the Automatic time zone entry from the country list.
The time zone will be set automatically according to the vehicle location.

ⓘ The Automatic time zone option is available for vehicles with satellite reception.

Setting the time and date format

Multimedia system:

→ [⌂] ▸▸ Settings ▸▸ System ▸▸ Time and date ▸▸ Set format

▶ Select a time and date format.

Setting the time and date manually

Requirements:

- The vehicle does not have satellite reception.

Multimedia system:

→ [⌂] ▸▸ Settings ▸▸ System ▸▸ Time and date

Setting the time

▶ Select Set time.

▶ Set a time.

▶ Press OK to confirm.

Setting the date

▶ Select Set date.

▶ Select a date.

▶ Press OK to confirm.

ⓘ On vehicles with satellite reception, the time and date settings are determined automatically based on the vehicle location and cannot be set manually.

Adjusting the time

▶ Select Adjust time.

▶ Set a value.

▶ Press OK to confirm.

ⓘ The function is only available in vehicles with satellite reception.

Vehicle position

Switching transmission of the vehicle position on or off

Requirements:

- A Mercedes me user account is available.
- At least one service is activated in the Mercedes me user account which has access to the transmitted position data.

ⓘ The function is country-dependent. For more information, consult a Mercedes-Benz service centre.

Multimedia system:

→ [⌂] ▸▸ Settings ▸▸ System ▸▸ Data protection

▶ Activate or deactivate theTransmit veh. position function.

ⓘ Alternatively, you can also switch the function on or off in the status line via [⌂].

Setting permissions

Multimedia system:

→ [⌂] ▸▸ Settings ▸▸ System ▸▸ Data protection ▸▸ Permissions

In the Permissions menu, you can set access authorisations for various data points (such as microphone, camera) used in an application. You can change permissions that have already been granted here. You can set permissions either for individual data points or for certain applications or websites.

▶ Select Requests or Apps/websites.

▶ Make the required settings for the permissions.

Bluetooth®

Information about Bluetooth®

Bluetooth® technology is a standard for short-range wireless data transfer up to approximately 10 m.

You can use Bluetooth® to connect your mobile phone to the multimedia system and use the following functions, for example:

- Hands-free system with access to the following options:
  - Contacts (→ page 501)
  - Call lists (→ page 502)
  - Text messages (→ page 503)
- Internet connection (→ page 528)

Bluetooth® is a registered trademark of Bluetooth Special Interest Group (SIG) Inc.

ⓘ Internet connection via Bluetooth® is not available in all countries.

Activating/deactivating Bluetooth®

Multimedia system:

→ ⌂ ▸▸ Settings ▸▸ System ▸▸ Internet and Bluetooth

▶ Activate or deactivate Bluetooth.

Near Field Communication (NFC)

Information on Near Field Communication (NFC)

NFC enables short-range wireless data transfer or connection of a mobile phone with the multimedia system.

Further information can be found at: https://www.mercedes-benz-mobile.com/

Switching near-field communication on or off

Multimedia system:

→ ⌂ ▸▸ Settings ▸▸ System ▸▸ Internet and Bluetooth

▶ Activate or deactivate NFC.

ⓘ Further information on connecting a mobile phone via the NFC interface (→ page 497).

Wi-Fi

Wi-Fi connection overview

You can use Wi-Fi to set up a connection to the Internet or to external network devices.

ⓘ The availability of the function is dependent on the country.

Generally, two types of Wi-Fi connection are available:

- **Using the multimedia system as a Wi-Fi hotspot** (→ page 435)

  The vehicle's multimedia system serves as a Wi-Fi hotspot for mobile communication devices, such as smartphones or tablet PCs, for example.

- **Using a mobile communication device as a Wi-Fi hotspot (tethering)** (→ page 530)

  An external Wi-Fi hotspot is accessed for the Internet connection of the vehicle's multimedia system.

Switching Wi-Fi on or off

Multimedia system:

→ [⌂] ▸▸ Settings ▸▸ System ▸▸ Internet and Bluetooth

▶ Select Wi-Fi.
The controller is to the right: Wi-Fi is switched on.

When Wi-Fi is switched on, you can connect the multimedia system with external hotspots or make it available as a hotspot for external devices.

When Wi-Fi is switched off, it is not possible to establish a hotspot connection.

ⓘ The availability of the function is dependent on the country.

Using the multimedia system as a WLAN hotspot

Requirements

- The device to be connected supports at least one of the types of connection described.

  The connection types shown depend on the device to be connected. The function must be supported by the multimedia system and by the device to be connected. The type of connection must be selected on the multimedia system and on the device to be connected.

ⓘ The data volume of the vehicle or an already connected tethering device is used for the data connection.
Vehicle data volumes: depending on the vehicle equipment, you can purchase a data package directly from a mobile phone network provider via the Mercedes me Store. To be able to use the data package, you conclude a separate contract with a mobile phone network provider via the Mercedes me Store, which can be terminated at any time and for which there are no costs. This contract is a prerequisite for using the services from the previously purchased package. The availability of this option is dependent on the country.
If the data package option is not available or can be upgraded, you can purchase data volume directly from the mobile phone network provider for a fee.

ⓘ Some functions may first need to be activated on the device being connected. More detailed information can be found in the manufacturer's operating instructions.

ⓘ The use of the vehicle data tariff by external devices is not available in all countries.

Multimedia system:

→ [⌂] ▸▸ Settings ▸▸ System ▸▸ Internet and Bluetooth

▶ Select MBUX hotspot.

▶ Select one of the following connection options.

Connecting using a QR code

Requirement: an app for scanning the QR code is installed on the device being connected.

Alternatively: the device being connected has an integrated QR code scanner (see the manufacturer's operating instructions).

▶ Scan the QR code shown.
The WLAN connection is established.

Connecting using NFC

▶ Activate NFC on the device to be connected.

- When the NFC symbol is displayed in the MBUX hotspot menu, hold the device to be connected to the NFC interface.
- Follow the instructions on the device.
  The WLAN connection is established.

Connecting using a security key

- Select the vehicle from the device to be connected. The vehicle is displayed with the MBUX XXXXX network name.
- Enter the security key which is shown in the media display on the device to be connected.
- Confirm the entry.

Generating a new security key

- Select the Generate new security key option in the MBUX hotspot menu.
- Confirm the prompt with Yes.
  A new security key is generated.

A connection will be established with the newly created security key.

ⓘ When a new security key is generated, all existing WLAN connections are then disconnected. If the WLAN connections are re-established, the new security key must be entered.

System language

Notes on the system language

This function allows you to determine the language for the menu displays and the navigation announcements. The selected language affects the characters available for entry. The navigation announcements are not available in all languages. If a language is not available, the navigation announcements will be in English.

Setting the language

Multimedia system:

→ ⌂ ▸▸ Settings ▸▸ System ▸▸ Language

Setting the system language

A list of the available system languages is shown.

- Select a language.
  The system language is switched to the selected language.

Setting the distance unit

Multimedia system:

→ ⌂ ▸▸ Settings ▸▸ System ▸▸ Display

ⓘ This function is not available in all countries.

- Select a unit for the distance.
- Activate Additional speedometer for an additional display in the driver's display.

Activating/deactivating system PIN protection

Multimedia system:

→ ⌂ ▸▸ Settings ▸▸ System ▸▸ Data protection ▸▸ PIN protection

Setting the system PIN

- Select Set PIN.
- Enter a four-digit system PIN.
- Enter the four-digit system PIN again.
  If both system PINs match, then the system PIN protection is active.

Changing the system PIN

- Select Change settings.
- Enter the current system PIN.
- Select Change PIN.
- Set a new system PIN.

Activating system PIN protection for software updates

- Select Protect software updates.
- Activate or deactivate the function.

Configuring suggestions

Multimedia system:

→ [⌂] ▸▸ Settings ▸▸ System ▸▸ Suggestions

- Select [⚙].
- Switch the options on or off individually.
  If an option is switched on and sufficient data has been gathered, personalised suggestions based on your user behaviour will be offered to you. These are, for example, navigation destinations visited, phone numbers dialled as well as suggestions based on your music preferences.

  Navigation

  When Allow destination suggestions is switched on, the vehicle makes suggestions based on your visited navigation destinations.

  If Commuter route is switched on, the navigation automatically detects that the vehicle is on a commuter route.

  Calls & messages

  Suggestions are offered for numbers dialled and messages sent.

  Comfort

  The vehicle makes suggestions based on the use of your comfort functions, e.g. which massage programme should be started at what time.

  Entertainment

  Suggestions are offered for the currently played media source. Suggestions are also made for online digital services, e.g. Spotify, TuneIn Radio and streaming services, and for categories, e.g. genre, artist and mood.

  Vehicle

  The suggestions for vehicle functions are displayed on the zero layer, e.g. for Parking Assist PARKTRONIC.

  The suggestions for vehicle functions are displayed, e.g. for Parking Assist PARKTRONIC.

  Online voice services

  The suggestions are made available online based on your voice input and are offered on the zero layer.

ⓘ The suggestions offered depend on the equipment.

Deleting collected suggestions

Multimedia system:

→ [⌂] ▸▸ Settings ▸▸ System ▸▸ Suggestions

- Select [↺].
- Select Yes.
  The suggestions are reset.

Software update

Information on software updates

Software updates keep your vehicle and the related systems up-to-date and prevent security flaws.

Software updates are available online for vehicle components such as control units, convenience systems, locking and safety systems, driver assistance systems, suspension and drive systems as well as for the MBUX multimedia system. Software updates are available via the communication module or a Wi-Fi connection to an external hotspot.

The navigation maps are also updated via updates from external storage media (e.g. USB flash drive).

Install available software updates regularly. Otherwise the security of your MBUX multimedia system and individual vehicle components cannot be ensured.

ⓘ Software updates can be protected with a system PIN. Further information about the system PIN (→ page 436).

Further information about software updates can be found at https://me.secure.mercedes-benz.com.

Carrying out software updates

Requirements

For software updates via the communication module and Wi-Fi:

- Your vehicle is linked to a Mercedes me user account (→ page 520).
- Software updates without Mercedes me user account: the Allow software updates option is activated in the Software update menu.
- For software updates via the communication module: an Internet connection exists via the communication module (→ page 529).
- For software updates via Wi-Fi: a connection to an external Wi-Fi hotspot exists (→ page 530).

ⓘ Depending on the software update, this is started via the [ ] communication module, [ ] Wi-Fi or an [ ] external storage medium.

ⓘ Online software updates cannot be performed via external Wi-Fi hotspots that are encrypted via TKIP.

ⓘ If the Wi-Fi hotspot requires logging in via the browser, once the connection is successfully established the browser will open in order to start the update. To start the download follow the instructions in the browser.

Multimedia system:

[ ] ▸▸ Settings ▸▸ System ▸▸ Software update ▸▸ [ ]

Starting a map update from an external storage medium

▶ Connect the storage medium with the vehicle via a media interface.
A message about an available map update appears on the media display.

▶ Select the message.

▶ Select Start.
The map update is started.

Starting the software update via the communication module

If the Automatic online update option is active, available software updates are downloaded and installed automatically. Activate the option in order to always keep your vehicle up-to-date and avoid security flaws.

- Select Automatic online update.
  The software update is downloaded and installed automatically.

If the option is deactivated, you will be informed of new software updates once. The updates are available for downloading for a limited period of time.

- Select an update from the list of available updates.
- Start the update.
  The software update is downloaded and installed automatically.

Starting a software update via Wi-Fi

Some software updates require an additional connection to a Wi-Fi hotspot. The connection to an external hotspot can be established when the software update is started.

- Select an update from the list of available updates.
- Start the update.
- Establish the connection to a Wi-Fi hotspot.
  The update is downloaded and installed automatically.

For software updates requiring a safe vehicle status: when the last installation step is reached, a message appears on the media display after the vehicle is switched off. Follow the step-by-step instructions on the media display to complete the installation.

There are software updates that can only be installed when the vehicle is safely parked, there are no more people in the vehicle and the vehicle is locked.

Installing software updates

Software updates are installed automatically after they are downloaded. As soon as the software update has been completed, a message appears in the media display. It may be necessary to restart the MBUX multimedia system.

Some software updates require a safe vehicle status for the installation to be completed. They can only be carried out in a safely parked vehicle with the vehicle switched off. If this is necessary, a message appears on the media display after the vehicle is switched off.

- Follow the instructions on the media display.

For some software updates, you can set a time for installation. The installation is carried out automatically at the scheduled time. You do not need to be in the vehicle during installation. Note that the planned installation is cancelled as soon as the vehicle door is opened.

If an installation is available where you can set the time, a message appears on the media display after the vehicle is switched off.

- Follow the instructions on the media display.

The vehicle cannot be used while these software updates are being installed. Make sure that no persons or animals are in the vehicle. Events

stored in the vehicle's control units can be overwritten.

Availability of the driver and media display

During the installation of software updates, it is not possible to use the vehicle, driver display and media display. You may receive the following display message when an installation is running:

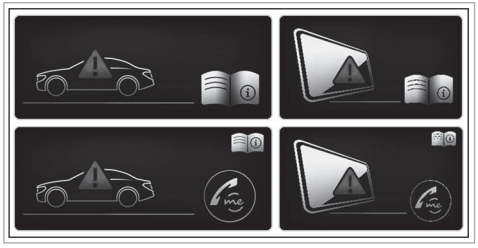

ⓘ The display message does not appear every time a software update is installed.

In rare cases, an error can occur during the installation. The multimedia system automatically attempts to restore the previous version.

If it is not possible to restore the previous version, the display message shown above appears every time the vehicle is started.

Failure of the driver display:
If the driver display fails or there is a malfunction, you may not recognise limitations in the functions of systems relevant to safety or the speed display, for example. The operating safety of the vehicle may be impaired. Drive on carefully and have the vehicle checked at a qualified specialist workshop immediately (→ page 785).

Further information about software updates can be found at https://me.secure.mercedes-benz.com

Failure of the media display:
If the media display fails or the display message shown above is shown continuously, several systems such as the reversing camera, Parking Assist PARKTRONIC or climate control are no longer available. Drive on carefully and consult a specialist workshop as soon as possible.

Resetting the multimedia system (reset function)

⚠ **WARNING** Risk of accident due to failure of central display functions

While the multimedia system is reset, its functions, such as the reversing camera, are not available.

▶ Only reset the multimedia system when the vehicle is stationary.

Requirements

- The vehicle is switched on.
- The vehicle is stationary.

Multimedia system:

⤳ ⌂ ▸▸ Settings ▸▸ System ▸▸ Reset

When resetting the system, personal data and settings are deleted, for example:

- Connected devices
- Individual user profiles
- Biometric data

ⓘ The data used and saved in the multimedia system by the driver assistance systems is deleted.

▶ Select Reset.
A query appears asking if the system should really be reset.

▶ Select Yes.
The multimedia system is reset to the factory settings. The multimedia system is restarted after the system reset.

ⓘ Due to data protection, as well as the function of individual driving systems and driving safety systems, it is a requirement to carry out a complete system reset before selling the vehicle or transferring it to a third party, or after use as a hire car.

AMG TRACK PACE

Function of AMG TRACK PACE

ⓘ This function is an on-demand feature (→ page 79).

With AMG TRACK PACE, the driving characteristics on race tracks can be analysed and optimised. You can drive previously saved race tracks (e.g. Hockenheimring), or record and save new tracks. The driven lap times are stored for every track. These can be analysed and compared to other lap times to achieve the best possible race results. Additionally, acceleration and braking procedures can be measured and stored.

Note: Use AMG TRACK PACE only on closed-off routes outside the public traffic area. Adapt your driving style to your personal performance and environmental conditions. As the driver, you are solely responsible for driving your vehicle. Park your vehicle safely before operating the application.

Setting Track Race

Multimedia system:
→ TRACK PACE ▸▸ Track Race

Recording a new track

▶ Select New track .

▶ Select ▶ Start Record. at the desired starting point.
The track recording starts at this point.

During track recording, sectors can be set to divide up the track.

▶ Select Set Sector.

▶ Select ■ Stop Recording to end track recording or cross the starting line again.

▶ Confirm the prompt with Yes.

▶ Select the weather.

ⓘ The temperature is determined automatically.

▶ Enter a name.

▶ Press OK to confirm.
The track is saved under the name entered.

Searching by track name

▶ Select Search .

▶ Enter the track name.
Tracks with the searched name are displayed.

Measuring time on a saved track

▶ Select All tracks.

- ▶ Select the desired track.
- ▶ Select [•••].
- ▶ Select Start timing if you are already at the starting line.

or

- ▶ Select Navigate to for navigation to the starting line.

Timing begins automatically when the starting line has been crossed.

ⓘ When [AR] is selected, the track display can be switched to AR. In addition, it is possible to switch to the telemetry display by selecting [ ].

- ▶ Select [ ] Stop timekeeping to end timekeeping.
- ▶ Confirm the prompt with OK.
- ▶ Select the weather.
- ▶ Select Yes to save the times driven for this track.

Showing readings during Track Race

The following readings can be shown:

- Tyre temperature
- Miniature map
- Sector overview
- Engine data
- G-force display
- Lap overview

- ▶ Select [ ] Start timing .
- ▶ Select [ ].
- ▶ Pull the desired display from the grid on the left or right edge of the media display.
  The readings are shown during the Track Race.

By selecting [×] on the active display, you can deactivate this.

Displaying the analysis

- ▶ [ ] Select All tracks.
  An overview of all the driven tracks appears.
- ▶ Select a track.
- ▶ Select a session.

  The following data are displayed:
  - Lap and sector times
  - Average and top speed
  - Driver
  - Vehicle
  - Date
  - Weather
- ▶ Select Add recording to use a different session as a reference value.
- ▶ Select [ ] to return to the overview.
- ▶ Select Diagram.
- ▶ Set the desired parameters.
  The analysis is displayed.

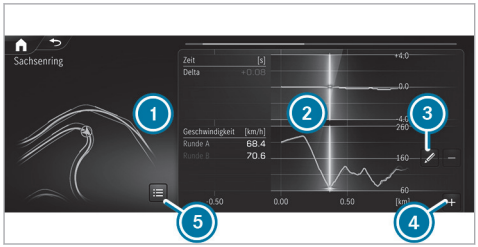

1. Lap overview
2. Parameter overview
3. Editing parameters
4. Adding new parameters
5. Deleting parameters

ⓘ The following values can be set for the parameters, for example:

- speed
- Longitudinal/lateral acceleration
- Steering angle
- Engine speed
- Engine oil/tyre temperature

Based on the analysis, you can check and optimise the driving behaviour for any position on the track.

Exporting tracks (USB)

- ▶ Select Tracks .
  An overview of all stored tracks appears.
- ▶ Select the desired track.
- ▶ Select options ••• for the desired track.
- ▶ Select Export track to....
  The selected track can be exported to a USB storage device connected to the vehicle.

Editing tracks and recordings

- ▶ Select Tracks .
- ▶ Select the desired track.
- ▶ Select options ••• for the desired track.
- ▶ Select Rename or Delete.

or

- ▶ Select a track.
- ▶ Highlight the desired recording.
- ▶ Select ••• options.
- ▶ Select Exporting to... or Delete.

Setting Drag Race

Multimedia system:

→ TRACK PACE ▸▸ Drag Race

Measuring acceleration

- ▶ Select Drag race options.
- ▶ Select Acceleration.
- ▶ Set a starting speed or select Automatic.
  Measurement begins as soon as the specified starting speed has been reached.
- ▶ Set a target speed.
  Measurement stops as soon as the specified target speed has been reached.
- ▶ Start off and begin the measurement.
  Measurement begins when the vehicle accelerates.

Measurement can be stopped early by interrupting the acceleration procedure.

Quarter mile race

- ▶ Select ⚙ Drag race options.
- ▶ Select Quarter-mile.
- ▶ Set a target distance.
  Measurement stops as soon as the specified target distance has been reached.
- ▶ Start off and begin the measurement.
  Measurement begins when the vehicle accelerates. Timing runs until the target distance or a maximum of one mile has been travelled.

Measurement can be stopped early by interrupting the acceleration procedure.

Measuring braking

- ▶ ⚙ Drag Race options
- ▶ Select Braking.
- ▶ Set a starting speed or select Automatic.
- ▶ Start off and begin the measurement.
- ▶ Brake to a stop.
  Measurement is incremental, in steps of 10 km/h to a stop. If the braking procedure is started e.g. at a speed of 157 km/h, measurement starts as soon as 150 km/h has been reached

Storing and calling up measured values

If measurement is completed or cancelled, a prompt appears asking whether the measurement should be saved.

- ▶ Confirm the prompt with OK to save.

Calling up saved measurements

- ▶ ☰ Select History.
- ▶ Select Acceleration, Quarter-mile or Braking.
- ▶ Select a measurement.
  The desired measurement is displayed in detail.

or

- ▶ Delete a measurement.

Calling up the telemetry display

Multimedia system:

↳ TRACK PACE ▸▸ Telemetry

The telemetry display shows current vehicle data as a digital value and as a diagram. Up to four parameters can be selected to be shown on the display.

For example:

- Engine speed
- Wheel angle
- speed
- Steering angle

- ▶ Set the desired parameters.
- ▶ Set the time.
  The set parameters are evaluated in the diagram for the selected time.

Configuring AMG TRACK PACE

Requirements

To connect a mobile device to the TRACK PACE app:

- The TRACK PACE app is installed on the mobile end device.
- The mobile end device is connected to the multimedia system via Wi-Fi (→ page 435).

Multimedia system:
→ TRACK PACE ▸▸ ⚙

Connect mobile device via the TRACK PACE app

The TRACK PACE app makes it possible to record videos and to synchronise them with stored tracks.

- ▶ Select TRACK PACE App.
- ▶ Select Authorise new device.
- ▶ Start the TRACK PACE app on the device to be connected.
- ▶ Select Continue and confirm the authorisation prompt.
  A four-digit code is shown on the media display.
- ▶ Enter the code on the smartphone.
  The device is authorised.

De-authorising the mobile device

- ▶ Select TRACK PACE App.
- ▶ Select a device.
- ▶ Confirm the prompt with Yes.
  The device is de-authorised.

Setting the TRACK PACE display on the head-up display and driver's display

- ▶ Select IC and HUD contents.
- ▶ Activate or deactivate the desired contents.
  The contents on the head-up display and the driver's display are adapted.

ⓘ For further information on the Head-up Display (→ page 393).

ⓘ Further information about the driver's display (→ page 379).

Setting acoustic feedback

- ▶ Select Acoustic feedback.
  A scale with values from 0 to 10 is shown.
- ▶ Select a setting.

Displaying statistics

- ▶ Select TRACK PACE statistics.
  Statistics on the current user profile are displayed.

  The following data are displayed:
  - Driving time
  - Track driven
  - Recorded tracks
  - Recorded Track Races
  - Laps recorded
  - Recorded Drag Races
  - Maximum design speed

Activating the ambient light

If this function is active, the vehicle interior is lit in red or green depending on delta time.

- ▶ Select Ambient light.
- ▶ Activate or deactivate the function.

Adjusting the dashcam

If the vehicle is equipped with a dashcam, it can be used in AMG TRACK PACE.

- ▶ Select Dashcam.
- ▶ Select Track Race or Drag Race and activate Activate recording.
- ▶ You can set which overlay is to be used in the recorded video under Video overlay contents.

Plug-in hybrid settings

Configuring the charging settings

Multimedia system:

→ [⌂] ▸▸ Hybrid ▸▸ Charging

Setting the charging program

▶ Select Home, Work or Standard.

ⓘ The standard charging program is automatically activated when the vehicle is switched on or off.

Unlocking the charging cable (mode 3 or 4)

When the function is active, the charging cable is unlocked when the maximum charge level is reached.

▶ Select Home or Work.

▶ Activate or deactivate Unlock charging cable.

Activating or deactivating location-based charging

▶ Select Charging program, home or Charging program, work.

▶ Activate or deactivate Select based on location.

When the function is activated, the vehicle's current position is saved as one of the selected options. When the address is reached again, a brief query appears as to whether the respective charging program should be selected.

Setting the departure time

The set departure times are used for the pre-entry climate control of the vehicle.

▶ Select Next departure time.

The following charging times can be selected:

- individual charging times
- a Week profile

Setting an individual departure time

▶ Select Add new time and set the desired departure time.

or

▶ Select [✎] and adapt an existing departure time.

Setting the repeat days

▶ Select Add new time and set the desired departure time.

▶ Mark the relevant weekdays for which the departure time will apply and confirm with [OK].

or

▶ Select [✎] and edit existing repeat days.

Setting the maximum charge level

▶ Select Maximum charge state.

▶ Set the desired percentage.
The high-voltage battery is charged up to the set percentage as a maximum.

ⓘ The percentage can be set in increments of 10%.

ⓘ As soon as the full charge level is reached, a notification is shown in the media display that the charging process is completed and the journey may be continued. The maximum charge level can be saved in the Home and Work charging programs. In the Standard charging program, the setting is automatically reset to a charge level of 100% after the vehicle is switched on or off.

Overview of the energy flow display in the multimedia system

The active components of the hybrid system are highlighted on the energy flow display. The energy flow between the individual components is shown in colour.

The components displayed are:

- State of charge of the high-voltage battery
- Combustion engine
- Energy flow
- High-voltage battery

The energy flow is shown in different colours depending on the operating status:

- **White:** constant energy flow
- **Red:** high energy flow (boost effect)
- **Green:** low-emission energy flow in the case of recuperation, electric mode and charging the high-voltage battery

Calling up the energy flow display

Multimedia system:

→ [⌂] ▸▸ Info

▶ Select Energy flow.
The energy flow in the vehicle will be displayed.

Information on the status of the hybrid system and the current state of charge of the high-voltage battery will be displayed in addition to the energy flow.

Fit & Healthy

Setting ENERGIZING seat kinetics

Requirements

ⓘ These functions are available only for fully electric seats with a memory function.

Multimedia system:

→ [⌂] ▸▸ Comfort ▸▸ Seat

▶ Select Seat kinetics.

ENERGIZING seat kinetics can support back health by changing the seat position during a journey. This involves repeatedly stressing and relieving the muscles and joints by means of minor movements of the cushion and backrest.

Starting seat kinetics

▶ Select [▶] for the desired seat.
The programme will run for the set duration.

Configuring seat kinetics

▶ Select [⚙] for the desired seat.

▶ Select Backrest, Backrest & seat surface or Seat surface.

▶ Select the desired duration for the selected seat.

ENERGIZING COMFORT

Overview of ENERGIZING COMFORT programmes

ⓘ Note that the available programmes and the associated functions depend on your vehicle equipment. Depending on your equipment, fewer functions may be available.

Programme overview

- **Refresh:** Can have a refreshing effect with short, cool puffs of air. The seat is ventilated, the vehicle interior is illuminated with cool colours and the programme is completed with appropriate sound.
- **Warmth:** Can increase the comfort level of the vehicle occupants. Seat, surface and steering wheel heater provide soothing warmth. The programme is completed with unobtrusive sound and warm colours.
- **Vitality:** Can counteract diminishing attentiveness in monotonous driving situations. The activating stimulation of the vehicle occupants is carried out with invigorating sound, activating light and a vitalising massage.
- **Joy:** Can promote a positive mood in the vehicle occupants as well as mental regeneration. This results from the activation of a massage programme, friendly sound and illumination with suitable colours.
- **Well-being:** Can help relax the vehicle occupants. This is achieved through a relaxing massage, friendly light and calming sound.
- **Forest Glade:** Can have a calming and soothing effect on the vehicle occupants thanks to the acoustics of the forest. The ambience is supported by a suitable animation, colours and sound.
- **Sounds of the Sea:** Can contribute to calming the vehicle occupants. The acoustics of wave sounds and seagulls in combination with other vehicle functions create a relaxing seashore atmosphere.
- **Summer Rain:** Can help relax the vehicle occupants. The relaxing effect of a rain shower can be experienced via acoustics and other vehicle functions inside the vehicle.
- **Power Nap:** The programme consists of three phases.
  - Falling asleep phase: here relaxing music is played and the air is purified by ionisation.
  - Sleeping phase: the active functions are deactivated or restricted as much as possible.
  - Waking phase: slightly stimulating music is played and the air is purified by ionisation. Additionally, functions such as fragrancing, seat ventilation and massage are activated.
- **Training:** Can counteract the onset of muscle tension, limbs falling asleep or stress with targeted relaxation or stimulation exercises. The exercises are demonstrated in short videos.

  The training consists of audio content and a brief animation. The audio content is conceived so that it can also be played back when you are driving. Animations are only shown when the vehicle is stationary. Always observe the traffic conditions if you are training when driving.
- **Tips:** The system gives auditory tips for possible exercises or measures for improving the

comfort level of the vehicle occupants. By selecting the desired area of the body you can receive targeted tips for the comfort level of this area.

Most programmes that have been started for one seat can also be transferred simultaneously to another seat.

Starting the ENERGIZING COMFORT programme

⚠ **WARNING** Increased risk of accidents when using the ENERGIZING COMFORT programmes Tips and Training

The Tips and Training ENERGIZING COMFORT programmes can distract you when driving.

- ▶ Only carry out exercises if the traffic situation permits.
- ▶ When listening to the tips, make sure you are aware of the traffic around you at all times.

⚠ **WARNING** Risk of becoming trapped when using the ENERGIZING COMFORT programme Power Nap

The following systems may be automatically moved when using the ENERGIZING COMFORT programme Power Nap:

- Side windows
- Sliding sunroof
- Roller sunblinds

As a result you or other vehicle occupants may become entrapped.

- ▶ Make sure that there is sufficient space behind the front seats.
- ▶ Make sure that no body parts are in the area of movement.

Requirements:

- The vehicle is switched on.

For the start of Power Nap:

- Only the power supply is on.
- The doors are closed.
- The vehicle is secured against rolling away.
- The state of charge of the high-voltage battery is sufficient for the use of the auxiliary climate control.

Multimedia system:

↳ [⌂] ▸▸ Comfort
▸▸ ENERGIZING COMFORT

Starting and stopping a programme

- ▶ Select a programme.
- ▶ Select [▶] for the desired seat.
- ▶ Select [■] to stop the programme.

ⓘ If, during an active programme, a function requirement is no longer met, a corresponding message appears. The active programme is cancelled.

Configuring a programme

- ▶ Select a programme.
- ▶ Select Settings.
- ▶ Switch the functions included in the programme on or off.

Setting the duration

- ▶ Select a programme.
- ▶ Select Settings.
- ▶ Select the desired duration.

Starting a Power Nap

- ▶ Select Power Nap.
- ▶ Select [▶] for the desired seat.

When the vehicle is stationary, the following actions are carried out when Power Nap is started:

- The roller sunblinds are extended.
- The doors are locked.
- The windows and sliding sunroof are closed.
- The parking brake is applied.

- ▶ Select [■] to stop the programme.

Starting the training programme

- ▶ Select Training.
- ▶ Select [▶] a programme.
- ▶ **To activate fragrancing for training:** select Air freshener.
- ▶ Select [■] to stop the training programme.

ⓘ The animations demonstrating the exercises are faded out when the vehicle is in motion and you only hear the instructions.

Starting tips

- ▶ Select Tips.
- ▶ Select [▶] an area of the body.
- ▶ Select [■] to stop playback of the tip.

ENERGIZING COACH

Function of the ENERGIZING COACH

Requirements:

- The ENERGIZING COACH service is activated in the Mercedes me portal or the Mercedes me App.
- The Mercedes me ENERGIZING app is installed on the mobile phone to use the service.

With ENERGIZING COACH you can evaluate the driving and driver situation. Depending on the situation, it offers recommendations for the start of an appropriate ENERGIZING COMFORT programme.

The following programs could be suggested:

- Vitality

  As an activating programme in monotonous driving situations or for long journey times, for example

  Information on the vitality program see (→ page 448).
- Joy

  As a balancing programme in demanding driving situations

  Information on the Joy programme see (→ page 448).
- Refresh

  As a refreshing programme when temperatures rise

  Information on the Refresh programme; see (→ page 448).

- Warmth

  As a warming programme when temperatures drop

  Information on the Warmth programme; see (→ page 448).

By connecting a Garmin fitness tracker, for example the Garmin vívoactive® 3, additional information can be entered into the evaluation for the recommendation of an ENERGIZING COMFORT programme. The additional information includes the stress level, that is calculated by the fitness tracker. The stress level is based primarily on the pulse rate.

Requirements for the integration of additional information via a Garmin fitness tracker:

- Your fitness tracker is connected with your Garmin account.
- Your Garmin account is connected with your Mercedes me user account.

If you wear your Garmin fitness tracker at night also, the sleep data is included in the evaluation of the ENERGIZING COACH.

Requirement for the integration of the sleep data:

- The Garmin fitness tracker is synchronised with the Garmin account before the beginning of the journey.

Calling up the ENERGIZING COACH display

Requirements:

- The fitness tracker is connected with your Garmin account.
- Your Garmin account is connected with your Mercedes me user account in the Mercedes me ENERGIZING app.
- The mobile phone is connected to the multimedia system (→ page 495).
- You are logged in with your Mercedes me profile both in the vehicle and in the Mercedes me ENERGIZING app.

Multimedia system:

→ [⌂] ▸▸ Apps ▸▸ ENERGIZING COACH

▶ Your current pulse as well as an evaluation of your pulse for the last 30 minutes driving time are shown.
A corresponding error message is shown if there is no mobile phone connected or no pulse can be sent to the system for an extended period.

ⓘ Only pulse values which fall into the range from 30 - 140 (possibly also 150) bpm will be shown on the media display. The pulse values have no medical validity but are only informative in nature and are therefore also not required to be accurate.

Navigation and traffic

Switching navigation on

Multimedia system:

→ [⌂] ▸▸ Navigation

▶ Alternatively, switch on the MBUX voice assistant (→ page 399).

▶ Switch to navigation.
The map appears.

Navigation overview

Digital map

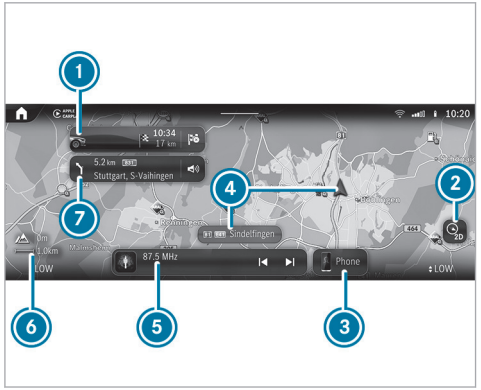

1 Navigation module (reduced view)
Route guidance active:
The navigation module shows the information relevant to the route in the zoomed-out view, e.g. the destination or a traffic delay
[⊗] Ends the current route guidance
Tapping opens the navigation module and displays the route overview (→ page 465)

2 Map orientation [⊘] and set map type

3 Calls up the telephone menu

4 Current vehicle position (vehicle symbol or arrow)

5 Calls up entertainment applications

6 Elevation and map scale (→ page 482)

7 Navigation window shows the next driving manoeuvre (zoomed out view) or the route monitor (zoomed in view)
Route guidance active: route monitor shows, e.g. route sections, upcoming driving manoeuvres with lane recommendations, destination, traffic delays, 3D images at motorway exits, online content

Pressing 2 several times changes the map orientation in this order:

- 2D and to the north
- 2D and direction of travel
- 3D and direction of travel
- Map with complete route

ⓘ If the map is moved, the map switches between 3D direction of travel and 2D north orientation.

The following map types 2 are available:

- Daytime display
- Night-time display
- Satellite map

ⓘ If you notice a problem with the digital map you can report this under https://mapfeedback.here.com/#/report.

Destination entry

Notes on destination entry

WARNING Risk of distraction from operating integrated communication equipment while the vehicle is in motion

If you operate communication equipment integrated in the vehicle when driving, you could be distracted from the traffic situation. This could also cause you to lose control of the vehicle.

- ▶ Only operate this equipment when the traffic situation permits.
- ▶ If you cannot be sure of this, stop the vehicle whilst paying attention to road and traffic conditions and operate the equipment with the vehicle stationary.

You must observe the legal requirements for the country in which you are currently driving when operating the multimedia system.

Entering a POI or address

Requirements

- For the online search:
  - There is an Internet connection.
  - Mercedes me connect is available.
  - You have set up a user account in the Mercedes me Portal.
  - The vehicle is connected with the user account and you have accepted the terms of use.
  - Further information can be found at: https://www.mercedes.me
  - The service is available and has been activated.

ⓘ If Online Search is not available, the search is performed using the data of the digital map.

Multimedia system:

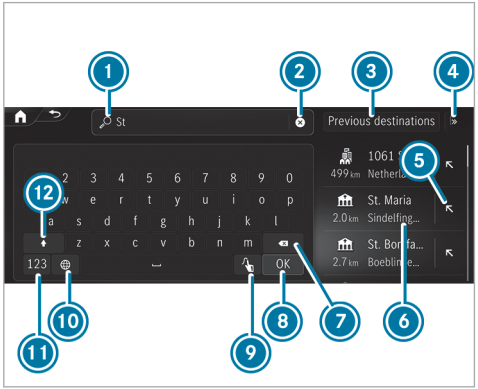

Example: entering a POI or address

1. Input line with current entry
2. Deletes an entry
3. Selects previous destinations
4. Displays and selects additional destination searches

⑤ Adopts the search result in the input line and continues the search
⑥ Search result
⑦ Deletes the last character entered
⑧ Hides the keypad
⑨ Switches to handwriting recognition (→ page 430)
⑩ Sets the written language
⑪ Switches to digits and special characters
⑫ Switches to upper-case or lower-case letters

If available, selecting the [ ] symbol starts the MBUX voice assistant.

▶ Enter a destination. The entries can be made in any order.
The search results are displayed in a list.

ⓘ Online search results for POIs may contain additional information, for example opening times and ratings. The information is provided by an online map service.
This online function is not available in all countries.

The following entries can be made, for example in ①:

- Town, street, house number or street, town
- Postcode
- POI name or POI category, e.g. Restaurants
- Town, POI name
- Contact name
- Geo-coordinates (→ page 456)
- Three-word addresses from what3words (→ page 456)

  Entering three-word addresses is possible in the online search .

▶ Hide the keyboard with [OK].

▶ Select the destination in the list.
The following menu shows the selected destination with the address information and a corresponding map section.

The menu enables the route to be calculated.

Selecting a destination suggestion

Requirements

- The Allow destination suggestions option is switched on (→ page 437).
- The multimedia system has gathered sufficient data in order to show destination suggestions.

Multimedia system:

[ ] ▸▸ Navigation ▸▸ [ ]

▶ Select Suggestions.
The route is calculated in the following menu.

ⓘ If Suggestions has been selected, a menu is available via [•••]. The menu offers settings for the suggestions and memory functions.

ⓘ Managing destination suggestions (→ page 475).

Selecting previous destinations

Multimedia system:

[ ] ▸▸ Navigation ▸▸ [ ]

▶ Select Previous destinations.

▶ Select the destination.
The following menu enables the route to be calculated.

ⓘ You can save a destination as a favourite (→ page 474).

Selecting a POI

Requirements

- **For use of personal POIs:** a USB device is connected with the multimedia system.
- Personal POIs with the GPS Exchange format (.gpx) have been saved in the PersonalPOI folder on the USB device.

Multimedia system:

→ [⌂] ▸▸ Navigation ▸▸ [🔍]

▶ Select POIs.

▶ Select one of the displayed quick access categories, e.g. [P] .

▶ Select the POI.
The following menu enables the route to be calculated.

or

▶ Select All categories or Personal POIs (see requirements).

▶ Select the category.

▶ Select the POI.
The following menu enables the route to be calculated.

Setting a search filter after selecting a POI category

The preset search position depends on the status of the route guidance:

- If route guidance is not active, In the vicinity is searched.
- If route guidance is active, Along the route is searched.

▶ When the search results are displayed, select Filter.

▶ Select the search position, e.g. In the vicinity.

▶ If a route with intermediate destinations already exists and Near destination has been selected in the search filters, the destination is selected for the search.

or

▶ Select the desired travelling time to the point of interest.

▶ Select Search results.

Configuring categories for quick access

The categories are displayed:

- As symbols after calling up the destination entry via [🔍]
- As a list after calling up All categories

▶ In the POI menu, select All categories.

▶ Select [☆] or [★] for a category.
Tapping on [☆] adds the category.
Tapping on [★] removes the category.

▶ Use [↩] to change back.
The new categories are shown after the destination entry is called up the next time.

ⓘ If all available quick-access positions are full, select the category to be replaced.

Changing the order of quick-access categories

▶ In the POI menu, press and hold a category for quick access.

- ▶ Tap on the arrows next to the selected category.
  The arrows for the other categories are greyed out.
- ▶ Drag the category up or down.
- ▶ Select [✓].

Deleting quick-access categories

- ▶ In the POI menu, press and hold a category for quick access.
- ▶ Select [★] for the chosen category.
- ▶ Select Delete.
- ▶ Select [✓].

Changing categories for personal POIs

- ▶ Select Personal POIs.
- ▶ Press on a category as long as is necessary until a menu appears.
- ▶ Select Change name and enter a name.
- ▶ Select Change icon and select a symbol.
- ▶ Select Delete and confirm the prompt with Yes.

Selecting a contact for destination entry

Requirements

- A mobile phone is connected to the multimedia system (→ page 495).
- The contacts from the mobile phone have been downloaded .
- The contact has a navigable address.
- The address data can be located on the digital map.

Multimedia system:

[⌂] ▸▸ Navigation ▸▸ [🔍]

- ▶ Enter a contact in the entry line.
- ▶ Select the address.
  The following menu enables the route to be calculated.

ⓘ Alternatively, after calling up the destination entry, you can enter the name of a contact in the search field.

Entering geo-coordinates

Multimedia system:

[⌂] ▸▸ Navigation ▸▸ [🔍]

- ▶ Enter the geo-coordinates as latitude and longitude.

Examples of input formats:

- 47°58'11"N 7°57'25"E (degrees, minutes and seconds)
- 47.969722 7.956944 (decimal degrees)

- ▶ Confirm the entry.
  The following menu enables the route to be calculated.

Entering the destination as a three-word address

Requirements

- An active Internet connection is indicated in the status line on the media display with the [⇄] symbol.
- The online search is active.

Multimedia system:

→ [⌂] ▸▸ Navigation ▸▸ [🔍]

▶ Enter the destination as a three-word address from what3words. The entry can be made with spaces between the words instead of dots. The search results are displayed.

▶ Select the destination in the list. The following menu enables the route to be calculated.

The Brandenburg Gate has this language dependent three-word address:

- German: tapfer.gebäude.verliehen
- English: that.lands.winning
- French: posteaux.bobineur.ombrant

ⓘ Searching for a destination using three-word addresses is not possible in all countries and in all languages.

Alternatively, use the following entry options:

- Entry in the global search (→ page 427)
- Voice navigation (→ page 399)

Example: during a telephone call you are given a three-word address. After activating the MBUX voice assistant, say one of the following two voice commands:

- Navigate to tapfer gebäude verliehen
- Navigate to tapfer Punkt gebäude Punkt verliehen

Three-word addresses from what3words are an alternative addressing system for multilingual georeferencing of global locations with a resolution of three metres. Using this grid, locations on the Earth's surface are included which do not have a building address such as a street and house number, for example.

ⓘ Three-word addresses are unique, easy to remember and suffice for most routine applications.

You can convert addresses to three-word addresses and back again:

- At the website https://what3words.com
- In the what3words apps

Selecting a destination on the map

Multimedia system:

→ [⌂] ▸▸ Navigation

▶ If necessary, move the map (→ page 481).

▶ Press and hold on the map. Available destinations are displayed.

or

▶ Briefly press on a POI symbol. The POI is selected. If there are several POIs at this map position, a list appears.

▶ Select the destination in the Selected objects list. The following menu enables the route to be calculated.

Selecting a destination from favourites

Requirements

- Destinations are saved as favourites.

  Save a previous destination or a destination suggestion as a favourite (→ page 474).

Multimedia system:

→ [⌂] ▸▸ Navigation ▸▸ [🔍]

▶ Select Favourites.

▶ Select a favourite.
The route is calculated in the following menu.

Addresses for home and work are already set

▶ Select Home or Work.
The following menu enables the route to be calculated.

Addresses for home and work are not yet set

▶ Select Home or Work.
The prompt No "Home" address available. Set address now? appears, for example.

▶ Select Yes.

▶ Search for or select the address.

▶ Select Save.

Deleting favourites

▶ Select [•••] for a favourite.

▶ Select Delete.

or

▶ Select Delete all.

▶ Confirm the prompt.
When all the favourites have been deleted, Add favourite is available, for example.

Selecting received destinations

Requirements

- There is an Internet connection for receiving external destinations.
- A destination has been sent to the vehicle.
- Destinations have been shared from another seat in the vehicle.

Multimedia system:

→ [⌂] ▸▸ Navigation ▸▸ [🔍]

The vehicle can receive destinations from services or apps. You will be informed when a destination is received.

▶ Select Received destinations.

▶ Select a destination.
The route is calculated in the following menu.

ⓘ You can save a received destination in the favourites (→ page 474).

Deleting received addresses

▶ Delete a destination with [🗑].

or

▶ Select Delete all.

Route

Calculating a route

Example: detailed display

1. Calls up alternative routes
2. Calculates the route and starts route guidance
3. Selects a point of interest in the vicinity of the destination
4. Destination address

   The detailed display can contain additional entries, such as a three-word address from what3words, online content

ⓘ If the destination is located in a multi-storey car park, for example, and corresponding data is available, the parking levels are displayed.

After selection of a destination the route is be calculated.

▶ Select one of the options.

Calling up alternative routes

▶ Select Routes.

▶ Select an alternative route (→ page 467).

Starting route guidance

▶ Select Let's go!.

Calling up the detailed display with destination address

▶ Pull the bar above 2 upwards.
Depending on the destination selection and availability, online content, for example ratings and weather information, is shown.

If the destination is in a different time zone, a message is displayed.

▶ **To share a destination:** select Share.
This option allows you to scan the displayed QR code.

▶ **To save a destination as a favourite:** select Favourite and then an option.

▶ **To call up an Internet address:** if a web address is available, select www.

▶ **To call the destination:** if a telephone number is available, select Call.

Searching for POIs in the vicinity of the destination shown

▶ Select In the vicinity.

▶ Search using categories, enter a search entry or search for a personal POI (→ page 455).

Adding an intermediate destination to the existing route or starting a new route guidance

▶ Select Add.
The selected destination address is set as the next intermediate destination. Route guidance begins.

▶ **There are already four intermediate destinations:** confirm the prompt with Yes and select

an intermediate destinations in the route overview (→ page 465), that should be overwritten with the new intermediate destination.

or

▶ Select [🏁] Replace.
The selected destination address is set as a new destination. Route guidance begins.

ⓘ If you call up the menu during route guidance, more options are available:

- To change the order of destinations, select Move (→ page 466).
- To delete the destination, select Delete (→ page 466).
- To cancel route guidance, select Cancel route guidance.

Paying for the charging process on a route with Mercedes me Charge (plug-in hybrid)

Requirements

- The Mercedes me Charge service is available and subscribed to in the Mercedes me Portal.
- The services "Navigation with Electric Intelligence", "Display of charging stations" and "Mercedes me Charge" are activated.
- **To select a charging station:** the Schedule charging stops option is switched on in the multimedia system.
- **For authentication at the charging station:** after activation in the Mercedes me Portal, you have concluded a charging contract with your payment details with the respective contractual partners.
- **For authentication using the app:** the Mercedes me App is installed on the external device, e.g. tablet or smartphone.
- For charging stations without remote access, you have purchased an RFID card for the contracting partner.

ⓘ This function is not available in all countries.

Multimedia system:

→ [⌂] ▸▸ Navigation

ⓘ Observe the following information:

- Read the notes on charging the high-voltage battery (→ page 273).
- Read the notes on charging the high-voltage battery at the charging station (→ page 277) and (→ page 278).
- **Before selection of a charging station:** the data for the charging stations is based on the online content available from the respective third-party provider.
- Observe the local information and conditions.

ⓘ With the Plug & Charge charging function of Mercedes me Charge, you can charge the vehicle at public Plug & Charge-enabled charging stations. The charging process starts immediately when the charging cable is plugged into the charging station. No further authentication is required. Communication between the vehicle and the charging station takes place directly via the charging cable.

This charging function is not available in all countries.

▶ **To select a charging station:** tap on a symbol on the map for a charging station or on a group of symbols for several charging stations.

▶ If a group of symbols is selected, select the charging station from the list.

The following information is displayed (if available):

- Name of the charging station operator
- Address of the charging station
- Plug with availability and information about charging power
- Opening times
- Name of the charging station
- Travel time and distance of the charging station from the vehicle
- Authentication method
- Contact information of the charging station operator
- General costs and charging costs
- Estimated charging costs and your available energy volumes, if available
- Display of available reviews and the ability to review with up to five stars
- Availability prognosis
- Information on green charging

  Mercedes-Benz provides high-quality certificates of origin to ensure that an equivalent amount of electricity from renewable sources is fed into the grid for charging processes carried out via Mercedes me Charge.

▶ Calculate the route (→ page 459).

ⓘ If the function is available, the start/stop of the charging process can be selected.

▶ **To access a charging station remotely (start/stop):** select a charging station in the map menu of the app or the MBUX multimedia system.

▶ Show the details using the widget (programme symbol).

▶ Select Start charging process.
The charging process starts. In addition, the payment agreement saved with the third-party provider is authorised.

ⓘ Remote access is not available for some charging stations. In this case use your RFID card to activate the charging process (if available).

▶ If required, enter the PIN for personalisation.

▶ Confirm the action.

▶ If required, select the connector ID from the list shown.
The selected charging cable connector is unlocked.

▶ Start the charging process.
The start of the charging process is shown.

▶ Select the Stop charging process display button in the app.
The charging process is ended.

Payment is processed automatically.

If data for third-party providers is available, you will receive this information:

- Overview of the charging process
- Estimated cost

ⓘ There may be differences between the costs listed and the costs billed.

You can watch an animation on this topic via the following link:

Switching low emission zones for the route on or off

Requirements

- Mercedes me connect is available.
- You have a Mercedes me connect user account and the vehicle is connected with the account.
- The "Traffic Restriction Zones" service is available and activated in the Mercedes me Portal. The service is free of charge for three years after registration.

Multimedia system:

→ [⌂] ▸▸ Navigation ▸▸ [⚙] ▸▸ View

▶ Activate Traffic restrictions.
The low emission zones along the route are shown on the digital map and in the route overview.

Before you enter a low emission zone, you will be shown a notification in the central display.

Plug-in hybrid: the vehicle takes zones with traffic restrictions into account and drives electrically in these zones. These are low emission zones and in future also zero emission zones.

Route guidance is active:

- When the vehicle enters a low emission zone, it switches to the Electric drive program. Electrical energy is reserved for low emission zones ahead. Thus the vehicle can switch to the Hybrid drive program when it exits a zone.

Route guidance is not active:

- When the vehicle enters a low emission zone, it switches to the Electric drive program.

ⓘ The Traffic restrictions function is switched off:

- No low emission zones are shown on the map.
- **Plug-in hybrid:** when the vehicle enters a low emission zone, there is no switch to another drive program.

Overview of the Range on Map service (plug-in hybrid)

The function is available under the following conditions:

- The "Range on Map" service, which is subject to a charge, is available and activated in the Mercedes me Portal.
- The Range option is switched on (→ page 486).

The fuel range (purple) and the electric range (white) are shown on the map as a closed line around the current vehicle position.

In the following cases, there is no display on the map:

- The overall range is very large.
- If the fuel level is less than 10 %.
- If the electric range of the vehicle is less than 6 km.

Selecting a route type

Multimedia system:

→ [⌂] ▸▸ Navigation ▸▸ [⚙] ▸▸ Route

Using trailer mode and online routes

The route is calculated as a fast route with a short journey time.

Trailer mode is available if a trailer has been coupled with the vehicle. If available, you can select online routes.

ⓘ Trailer mode and online routes are not available in all countries or for all vehicles.

▶ Select Trailer mode
A prompt is shown in the multimedia system.

▶ Confirm the prompt.
The arrival time at the destination takes into account a reduced driving speed with trailer.

▶ **To use online routes:** switch on the option.

Taking traffic information for the route into account

▶ Select Dynamic route guidance [>].

▶ Select one of the options.

Explanation of the options:

- Automatic

  Traffic reports via Live Traffic Information are taken into account (→ page 475).

  Live Traffic Information and FM home screen are not available in all countries.

- After asking

  A prompt appears when a new route is detected with a shorter journey time based on traffic reports. You can continue to use the current route or use the dynamic route instead (→ page 463).

- Off

  No traffic reports are taken into account for the route.

Calculating alternative routes

Multimedia system:

→ [⌂] ▸▸ Navigation ▸▸ [⚙] ▸▸ View

▶ Switch on Overview of route after start.
Alternative routes are calculated for every route.

Accepting a detour recommendation after a prompt

Requirements:

- After asking is switched on (→ page 463) in the Dynamic route guidance menu.
- Route guidance is active.
- There are traffic reports for the current route.

If a new route with a shorter driving time is determined, the current and new routes will be shown.

If another application is active, a notification is hidden.

- Confirm the notification.
- **To accept the new route:** select Accept.
- **To maintain the current route:** select Keep to current route.

Selecting route options

Multimedia system:

→ [⌂] ▸▸ Navigation ▸▸ [⚙] ▸▸ Route ▸▸ Avoid options

Avoiding or using route sections, e.g. motorways or ferries

- Activate or deactivate the avoid option.
  Avoid: the option is activated. The route avoids motorways, for example.

  Use: the option is deactivated. The route takes motorways into consideration, for example.

ⓘ The selected route options cannot always be taken into account. Therefore, a route may include a ferry, for instance, even though the Avoid ferries avoid option is enabled. A message then appears and you will hear a corresponding message.

Avoiding or using toll roads

The use of toll roads requires a usage fee (toll).

- Select Toll roads [>].
- Activate or deactivate Avoid all.
  If the option is activated, the route avoids toll roads.

  If the option is deactivated, the route takes toll roads into account.

or

- Select an option for Payment by cash or card or Electronic billing.
  Avoid: the route avoids toll roads with the selected method of payment.

  Use: the route takes into account roads that require a toll corresponding with the payment type selected.

Avoiding or using roads requiring a special toll sticker

A vignette allows for the use of a route network for a limited time period.

- Select Avoid vignette roads [>].
- Activate or deactivate Avoid all.

or

- Switch individual countries on or off in the list.
  Avoid: the option is activated. The route avoids roads requiring a special toll sticker in the selected countries.

  Use: the option is deactivated. The route takes into account roads in the selected country which require you to pay a time-based fee (vignette).

ⓘ These route options are not available in every country.

Avoiding or using areas with low emission zones

ⓘ The function is available when there is an active internet connection.

- Activate or deactivate Area with low emission zones.
  Avoid: the option is activated. The route avoids all low emission zones restricted for the vehicle. These are displayed in red on the map.

  Use: the option is deactivated. The restricted low emission zones for the vehicle are passed through on the route. A warning is displayed before you drive into a low emission zone.

Avoiding areas

▶ Select Avoid areas [>] (→ page 483).

Selecting notifications for the route

Requirements:

- **For an audible indication when approaching a personal POI:** the USB device contains personal POIs.
- The USB device is connected with the multimedia system.
- The category in which the personal POI belongs is activated.

Multimedia system:

[ ] ▸▸ Navigation ▸▸ [ ] ▸▸ Messages & tones

Switching navigation announcements on or off

▶ Activate Reduced messages.
If a driving instruction is available for a simple change in direction, you hear a brief announcement, e.g. "turn right in 200 m". The number of driving instructions along the route is minimised.

▶ Activate Detailed messages.
If a driving instruction is available and there is a complex driving situation, you hear supplementary information, e.g. "In 200 m turn right and continue to follow the major road". Additional driving instructions are issued for the route, for example on turning major roads.

▶ Activate Announce street names.
The name of the street into which the vehicle should turn is announced.

ⓘ This option is not available in all countries and languages.

Switching traffic announcements on or off

▶ Activate or deactivate Announce traffic warnings.
If available, traffic warnings are announced, e.g. before the end of traffic jams that pose a risk.

Audible indication when approaching a personal POI

▶ Select Personal POIs.

▶ Activate a category.
When approaching a personal POI in the selected category an audible indication will be issued.

Displaying a route overview

Requirements

- A destination is entered.

Multimedia system:

[ ] ▸▸ Navigation

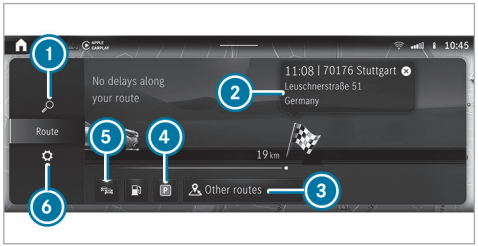

Example: route guidance is active

1. Enters an address or POI
2. Destination and time of arrival

beneath that the current distance to the destination and the chequered flag
3. Alternative routes
4. Searches for parking
5. Switches traffic information display on or off
6. Makes settings for View, Messages & tones and Route

When route guidance is active, the destination and entered intermediate destinations are shown.

Depending on the route, traffic situation and available data, further information is displayed:

- Name, destination address
- Symbols for intermediate destination and destination
- Phone number (if available)
- Web address (if available)
- Traffic information

The route can include up to four intermediate destinations.

▶ Select one of the options.

Planning routes

Multimedia system:

→ [⌂] ▸▸ Navigation ▸▸ [🔍]

▶ Enter the intermediate destination (→ page 34).
After entering the destination and new calculation of the route, the route overview is shown again. The route contains a new intermediate destination.

ⓘ If there are already four intermediate destinations, delete an intermediate destination (→ page 466).

Editing a route with intermediate destinations

Requirements:
- The destination and at least one intermediate destination have been entered.

Multimedia system:

→ [⌂] ▸▸ Navigation

Changing the order of the destinations

▶ In the route overview, press and hold on a destination.

▶ Move the destination with [◀] or [▶].

▶ Tap on [✓].
The editing mode is ended.

Deleting a destination

▶ In the route overview, press and hold on a destination.

▶ Tap on [🗑].
The editing mode is ended.

Displaying the route list

Multimedia system:

→ [⌂] ▸▸ Navigation

▶ Tap on navigation window 7 on the digital map (→ page 452).

Example: route list

1. Upcoming manoeuvre with turning arrow, distance to manoeuvre, street number, street name

   Switches on navigation announcements

   Switches off navigation announcements

   Including the following route sections on the route to the destination
2. Current vehicle position

The route sections are displayed in the navigation window. The route list is updated during the journey.

ⓘ Motorway information shows the available service facilities. After selecting symbols, e.g. for car parks, service areas or motorway exits, the POI is adopted as an intermediate destination or destination.

▶ Press the arrow at the bottom of the navigation window briefly.

▶ Swipe up or down.

▶ Select a route section.
The map section is displayed.

▶ **To return to vehicle position:** select Current position.

Selecting an alternative route

Requirements

- A route has already been created.
- The Overview of route after start option is switched on (→ page 463).

Multimedia system:

→ ⌂ ▸▸ Navigation ▸▸ Other routes

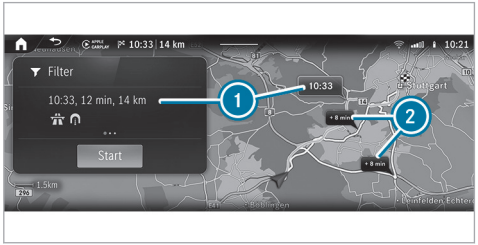

Example: alternative routes

1. Original route is highlighted
2. Alternative routes with indication of the difference in driving time

ⓘ In 2 a faster route may also be shown that is considerably longer.

The following route information is displayed:

- Driving time
- Time of arrival
- Distance to the destination

- Avoid options based on the set route options
- Driving time saved or lost compared with the original route

▶ When the alternative routes have been calculated, display the route in the navigation window by swiping to the right or left.

Changing route type

▶ Select Filter.

▶ Switching the route type on or off.

Avoiding or using route options

▶ Select Filter.

▶ Switch the route options on or off (→ page 464).

▶ Confirm the settings with Finished.

▶ **To start route guidance to the alternative route:** select Start.

▶ **To select an alternative route on the map:** touch any point on the alternative route. The alternative route is highlighted.

Activating a commuter route

Requirements:

- You have created a profile (→ page 420).
- The Allow destination suggestions option is switched on (→ page 421).
- The Commuter route option is switched on .
- The multimedia system has gathered sufficient data in order to show destination suggestions.
- Routes have been learned for these destination suggestions.
- Route guidance is not active.

ⓘ This commuter route is not available in all countries.

Multimedia system:

→ [⌂] ▸▸ Navigation ▸▸ [⚙] ▸▸ Route

▶ Activate Commuter route.
The navigation system automatically detects that the vehicle is on a commuter route.

For the daily commuter route, traffic incidents on the route are also reported when driving without active route guidance.

▶ **To select commuter route:** select Start.
Route guidance begins without spoken driving instructions.

ⓘ A commuter route is suggested even with delays on the route.

▶ **To delete a commuter route:** select [×].

Starting the automatic service station search

Requirements

- ATTENTION ASSIST is activated (→ page 315).
- You are driving on a motorway.
- There are service stations along the route section ahead.

Driving situation

The following notification is shown on the media display ATTENTION ASSIST Tap here to search for rest areas..

▶ Confirm the notification.
The service station search starts. The available service stations along the route or in the

vicinity of the vehicle's current position are displayed.

▶ Select a service station.

▶ Calculate the route with the service station as an intermediate destination or as a destination (→ page 459).

▶ **If there are already four intermediate destinations:** select Yes in the prompt.
The selected service station is entered in the route overview at position 1. Intermediate destination 4 is deleted. Route guidance begins.

Starting and editing a stored route

Requirements:

- A USB device with stored routes is connected with the multimedia system (→ page 540).
- The route is stored in the "Routes" folder with the GPS Exchange format (.gpx).

Multimedia system:

→ ⌂ ▸▸ Navigation ▸▸ 🔍

▶ Press the double arrow in the destination input line until Stored routes is displayed.

▶ Select Stored routes.

Starting a saved route

▶ Select a route.

▶ Select Start: route guidance at start or Start: current location.
Route guidance begins.

Renaming a route

▶ Press on a route until a menu is shown.

▶ Select Rename.

▶ Enter the name.

▶ Select OK.

Recording and storing a route

Requirements:

- A USB device is connected with the multimedia system (→ page 540).

Multimedia system:

→ ⌂ ▸▸ Navigation ▸▸ 🔍

▶ Press the double arrow in the destination input line until Stored routes is displayed.

▶ Select Stored routes.

Starting recording

▶ Select Start recording.
A white rectangle is displayed.
The route is stored on the USB device.

Stopping recording

▶ Press the white rectangle.

▶ Select End recording.

Route guidance

Notes on route guidance

⚠ **WARNING** Risk of distraction from operating integrated communication equipment while the vehicle is in motion

If you operate communication equipment integrated in the vehicle when driving, you could be distracted from the traffic situation. This could also cause you to lose control of the vehicle.

- ▶ Only operate this equipment when the traffic situation permits.
- ▶ If you cannot be sure of this, stop the vehicle whilst paying attention to road and traffic conditions and operate the equipment with the vehicle stationary.

You must observe the legal requirements for the country in which you are currently driving when operating the multimedia system.
Route guidance begins once a route has been calculated. The road and traffic rules and regulations always have priority over multimedia system driving instructions. Driving instructions are, for example navigation announcements, changes in direction and lane recommendations.

Changes in direction and lane recommendations are shown in the navigation window.

The following displays and functions are also available in the navigation window, for example:

- Route list
- Destination information
- Traffic information, e.g. length of traffic jam, delay
- Motorway facilities
- Car park search
- Emergency corridors

If you do not follow the driving instructions or if you leave the calculated route, a new route is calculated automatically.

If, for example, the route is diverted or the direction of a one-way road has been reversed, driving instructions may deviate from the actual traffic situation.

Alternatives may be offered during route guidance, e.g. before passing a motorway exit road. The additional driving time for the journey along the motorway exit is shown.

For this reason, you must always observe road and traffic rules and regulations during your journey as well as the prevailing traffic conditions.

The route can differ from the ideal route, for example in the event of roadworks or incomplete digital map data.

Notes on satellite reception
The correct function of the navigation system depends amongst other things on reception of the satellite system used. In certain situations satellite reception can be impaired, malfunction or even not be possible, e.g. in tunnels or in multi-storey car parks.

Changing direction overview

Changes of direction are shown in the following displays:

- Detailed image of the junction

  The display appears when you drive into a junction.
- 3D image

  The display appears when driving on junction-free, multi-lane roads, for example at motorway exits and motorway interchanges.

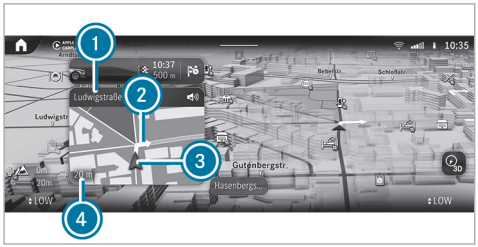

Example: detailed image of the crossing with upcoming changes of direction

1. Name of the street to turn into
2. Change of direction arrow (also on the map)
3. Current vehicle position
4. Current distance to the change of direction

Example: 3D image of the upcoming change of direction

1. Manoeuvre point
2. Change of direction arrow (also on the map)
   Larger map scales show change of direction points instead of change of direction arrows.
3. Current distance to the change of direction
4. Current vehicle position

There are three phases when changing direction:

- Preparation phase

  If there is enough time between the changes of direction, the multimedia system prepares you for the upcoming change of direction. A navigation announcement is issued, e.g. "Prepare to turn right".

  The navigation window shows: the direction information or the name of the road which is to be turned into as well as the distance to the change of direction.

- Announcement phase

  The multimedia system announces the upcoming change of direction, e.g. by announcing "Turn right in 300 m".

  When the Auto zoom map orientation is switched off (→ page 485), a detailed representation of the junction or a 3D image of the upcoming change in direction appears in the navigation window.

- Change-of-direction phase

  The multimedia system announces the imminent change of direction, e.g. by announcing "Now turn right".

  Example of 3D image: when the distance to manoeuvre point 1 is shown with 0 m and the symbol for current vehicle position 4 has

reached manoeuvre point ① the change in direction is carried out.

ⓘ Changes in direction are also displayed on the driver's display and head-up display.

Lane recommendations overview

Example: lane recommendations

① Lane not recommended (grey arrow)
② Possible lane (white arrow)
③ Recommended lane (white arrow, blue background)

This display appears for multi-lane roads.

If the digital map contains the relevant data, lane recommendations are displayed in the navigation window.

Explanation of the displayed lanes:

- Recommended lane

  In this lane, you will be able to complete both the next change of direction and the one after that.
- Possible lane

  In this lane, you will only be able to complete the next change of direction.
- Non-recommended lane

  In this lane, you will not be able to complete the next change of direction without changing lane.

During the change of direction, new lanes may be added. Bus lanes are also shown.

ⓘ Lane recommendations are also displayed on the driver's display and head-up display.

Using motorway information

When driving on the motorway, upcoming motorway facilities and available service facilities are shown in the route list. These include car parks, service stations or motorway exits with service POIs, for example.

The entries are sorted according to increasing distance from the current vehicle position.

▶ Select an entry.

▶ If several service facilities are available, select a service facility from the list.
The destination address and the map position are shown.

▶ Calculate the route (→ page 459).

or

▶ Search for a POI in the vicinity.

or

▶ Use other functions, e.g. store the destination address of the service facility.

Destination reached

Once the destination is reached, you will see the 🏁 chequered flag. Route guidance will now be complete. The navigation menu is shown.

When an intermediate destination has been reached, you will see the intermediate destination

flag with the number of your [ ] intermediate destination. Route guidance is continued.

Switching navigation announcements on or off

Switching off

- During a navigation announcement, press the [ ] button on the steering wheel or controller in the centre console.
  The Spoken driving recommendations have been deactivated. message appears.

or

- In the route list for a driving manoeuvre select [ ] (→ page 466).
  The symbol changes to [ ].

Switching on

- Press the button on the steering wheel or on the controller in the centre console again.

or

- In the navigation window, select [ ] for an upcoming driving manoeuvre.
  The current navigation announcement is played.
  The symbol changes to [ ].

Switching navigation announcements on or off during a phone call

- Press the [ ] button on the steering wheel on the right.

or

- Tap on [ ] in the media display.
- Select Settings.
- Select System.
- Select Audio.
- Select Navigation & traffic announcements.
- Activate or deactivate Driving recommendations during call.
- **To leave the menu:** select [ ].

Adjusting the volume of navigation announcements

Multimedia system:

[ ] ▸▸ Settings ▸▸ System ▸▸ Audio ▸▸ Navigation & traffic announcements

- Select Driving recommendation vol..
- Set the volume.
- **To leave the menu:** select [ ].

Route guidance is active

- During a navigation announcement, adjust the volume on the steering wheel or on the controller in the centre console (→ page 428).

Switching audio fadeout on or off during navigation announcements

- Press the [ ] button on the steering wheel on the right.

or

- Tap on [ ] in the media display.
- Select Settings.
- Select System.
- Select Audio.
- Select Navigation & traffic announcements.
- Activate or deactivate Audio fadeout during navigation announcements.
- **To leave the menu:** select [ ].

Repeating navigation announcements

Requirements

- A route has already been created.

- Route guidance is active.

Multimedia system:

→ [⌂] ▸▸ Navigation

▶ In the navigation window, select [🔊] for an upcoming driving manoeuvre.

▶ Select [🔇].
The current navigation announcement is repeated.

Cancelling route guidance

Requirements:

- A route has already been created.
- Route guidance is active.

▶ Show the navigation menu.

▶ Select [✕] in the navigation menu (→ page 452).

Overview of off-road status during route guidance

Due to roadworks, for example, there may be differences between the data on the digital map and the actual course of the road. In such cases, the multimedia system will temporarily be unable to locate the vehicle's current position on the digital map. The vehicle is off-road. Road not mapped will be shown. Route guidance may be restricted.

When the vehicle is back on a road known to the multimedia system, route guidance continues as normal.

Destination

Saving the current vehicle position

Multimedia system:

→ [⌂] ▸▸ Navigation

▶ When the map is shown, tap on the [▲] current vehicle position.

▶ Select Store position.

▶ **To save as a favourite:** select Save as favourite .

▶ **To save as "Home" address:** select Home .

▶ **To save as "Work" address:** select Work .

Managing previous destinations

Multimedia system:

→ [⌂] ▸▸ Navigation ▸▸ [🔍]

▶ Select Previous destinations.

▶ Select [•••] for the last destination.

Saving the last destination as a favourite

▶ Press and hold on one of the previous destinations.
A menu appears.

▶ **To save as a favourite:** select Save as favourite .

▶ **To save as "Home" address:** select Home .

▶ **To save as "Work" address:** select Work .

Deleting a previous destination

▶ Select Previous destinations.

▶ For a last destination, select [•••].

▶ Select Delete.

or

▶ Select Delete all.

▶ Confirm the prompt.
When all the favourites have been deleted, Add favourite is available, for example.

Editing destination suggestions

Requirements

- The Allow destination suggestions option is switched on (→ page 437).
- For the display of destination suggestions: the multimedia system has gathered sufficient data.

Multimedia system:

⮌ ⌂ ▸▸ Navigation ▸▸ 🔍

▶ Select Suggestions.

▶ Press and hold on a destination suggestion. A menu appears.

▶ **To cancel a destination suggestion:** select Do not suggest now or No longer suggest.

▶ **To save a destination suggestion:** select Save as favourite, Home or Work.

ⓘ Delete a destination suggestion from the favourites (→ page 458).

Route guidance with current traffic reports

Traffic information overview

Current traffic reports are received with the Live Traffic Information subscription service.

If the subscription has expired, then FM RDS-TMC is available in selected countries.

ⓘ Live Traffic Information is not available in all countries.

The service must be registered in the Mercedes me user account (→ page 476). This secures the free-of-charge period of three years.

The service updates the traffic situation via the Internet connection at short, regular intervals.

Information on the vehicle's position is regularly sent to Mercedes-Benz AG. The data is immediately rendered anonymous by Mercedes-Benz AG and forwarded to the traffic data provider. Using this data, traffic reports relevant to the vehicle's position are sent to the vehicle. The vehicle acts as a sensor for the flow of traffic and helps to improve the quality of the traffic reports.

ⓘ There may be differences between the traffic reports received and the actual road and traffic conditions.

If you do not want to transmit the vehicle position, you have the following options:

- You deactivate the service in the Mercedes me user account.
- You have the service deactivated at a Mercedes-Benz service centre.

ⓘ Further hazard warnings are received using the Car-to-X service (→ page 478).

Showing information from the service provider for Live Traffic Information

Requirements

- The vehicle is equipped with Live Traffic Information.

Multimedia system:

⮌ ⌂ ▸▸ Apps ▸▸ Mercedes me ▸▸ My services

▶ Select Live Traffic.

When the subscription for Live Traffic Information has expired then in selected countries FM RDS-TMC is available.

Registering Live Traffic Information

Requirements:
- The vehicle is equipped with Live Traffic Information.
- You have a Mercedes me user account.

▶ Create a Mercedes me user account at: https://www.mercedes.me. A valid email address is required for this.

▶ Register the vehicle using the vehicle identification number (VIN).

▶ Connect the vehicle with your Mercedes me user account.
A code is sent to the multimedia system.

▶ Enter the code into the multimedia system.

▶ Accept the general and specific terms of use.

ⓘ Alternatively, you can have the connection completed at a Mercedes-Benz service centre.

Extending a Live Traffic Information subscription

Requirements:
- The vehicle is equipped with Live Traffic Information.
- You have a Mercedes me user account.

▶ Call up the Mercedes me website.

▶ Call up the Mercedes me user account.

▶ Switch to the Mercedes me Store via the linked vehicle.

▶ Select Live Traffic Information.

▶ Select the renewal period.

▶ Add the product to the shopping basket.

▶ Accept the general and specific terms of use. Live Traffic Information remains activated for the selected extension period. Activation begins on the date of extension.

Displaying traffic information on the map

Requirements
- Traffic incidents and Free-flowing traffic are switched on (→ page 478).

Multimedia system:

▶ If necessary, move the map (→ page 481).

The map shows the following traffic information depending on the activated settings:

- Traffic incidents

  These are roadworks, road blocks and warning messages, for example.

  When route guidance is active, the symbols for traffic incidents will be shown in colour on the route. Off the route they are grey.

- Warning messages

  Warning messages are shown as the ⚠ symbol.

  Traffic safety information can be shown, e.g. if there are people on the carriageway.

  If the vehicle approaches a danger area, for example the end of a traffic jam in a dangerous position, the symbol is shown on the map. If Announce traffic warnings is switched on and a message has been issued, an additional announcement is made.

- Traffic flow information:
  - Traffic jam (red line)
  - Slow-moving traffic (orange line)
  - Heavy traffic (yellow line)
  - Free-flowing traffic (green line)
- Display for traffic delays on the current route

  The smallest value for the display for traffic delays is a minute.

Showing traffic events on the route

Requirements

- The Traffic incidents display is switched on (→ page 478).

Multimedia system:

→ [⌂] ▸▸ Navigation

If there are traffic events on the route, these are shown on the map and in the route overview.

ⓘ With the MBUX Voice Assistant you can inform yourself about traffic events on your route. Ask, for example **How is the traffic on my route?** or **How is the traffic at home?**. A voice output is given.

Example: traffic events on the map

1. Total delay or message that there are no delays along the route
2. Switches traffic information display on or off
3. Calls up settings for View, Messages & tones and Route

If there are any delays along the route, these are shown in the route overview together with the following information:

- Traffic jam: red bar
- Slow-moving traffic: orange bar
- Heavy traffic: yellow bar
- For each section:
  - The delay
  - The length
  - The street name or the street number

ⓘ During active route guidance, the total delay on the route is also displayed here:

- in the navigation system in the navigation module
- in other applications in the status line at the top

Traffic incident symbols are shown in the route overview and in the map. A traffic incident symbol is, for example [⚠] for roadworks.
In the map several traffic events may be shown on top of each other. The traffic event symbol shows a plus sign.
If available, the street number can be replaced by a street name or both the name and number.

ⓘ If a message about forming an emergency corridor has been issued, Emergency corridor is shown in the navigation window.

- To see all of the traffic events on the route, swipe to the right or left.
  The route section is highlighted on the map.
- **To show detailed information in the route overview:** tap on a display in the route overview.
  The detailed information is shown, for example the road section and the direction.

Calling up detailed information on the map

- Tap on traffic flow information on the map, e.g. a red line for a traffic jam section.
  The detail information is displayed.
- If several lines are shown on top of the other, then select an item of traffic flow information from the list.

Showing traffic events on the map

- Tap on a traffic event symbol.
  The detail information is displayed.
- **Several traffic events are in the immediate vicinity:** tap on the top traffic event symbol and select from the list of traffic events.

Switching the traffic information display on

Multimedia system:

→ [⌂] ▸▸ Navigation ▸▸ [⚙]

- Select View.
- Traffic .
- Activate Traffic incidents and Free-flowing traffic.
  Traffic incidents, for example roadworks, local area reports (e.g. fog) and warning messages, are shown on the route.

Car-to-X-Communication

Car-to-X-Communication overview

The following requirements apply for the Car-to-X-Communication service:

- The vehicle is equipped with an MBUX multimedia system with navigation function.
- There is a subscription for the Live Traffic Information service.
- The Car-to-X-Communication service is activated in your Mercedes me user account.

ⓘ Car-to-X-Communication is available in selected countries.

The communication module automatically establishes an Internet connection once the vehicle is switched on. If there are any hazard warnings, they will be provided shortly thereafter. Depending on the mobile phone connection, provision takes place from within a second up to about a minute.

Benefits of Car-to-X-Communication:

- Dangers are automatically detected by the vehicle or can be reported by the driver. These are then sent to vehicles with Car-to-X-Communication in the immediate vicinity.
- If available, current details relating to hazard spots near the vehicle's current position are received.

  This gives you sufficient time to adapt your driving style to the traffic conditions.

The use of Car-to-X-Communication requires the regular transmission of vehicle data to Mercedes-Benz AG. The data is then immediately pseudonymised by Mercedes-Benz AG. The vehicle data is

deleted after an appropriate amount of time has elapsed (several weeks) and is not stored permanently.

ⓘ Data which serves as identification is replaced during the pseudonymisation process. In this way, your identity is protected against access by unauthorised third parties.

Displaying hazard warnings

Multimedia system:

→ [⌂] ▸▸ Navigation

If hazard warnings are available these can be shown as symbols on the map. The display depends on the settings for the Traffic incidents option.

▶ Set the option via [⚙] (→ page 478).
If the option is activated, all of the symbols are shown.

If the option is deactivated, the symbols are only shown when there is a hazard warning.

The following hazards may be shown on the map:

- Accidents and breakdowns
- Slippery roads, fog, crosswinds and heavy rain
- Hazards reported manually
- Vehicle with active hazard warning light
- Roadworks
- Additional hazards (if available)

ⓘ If Announce traffic warnings is switched off (→ page 465), voice output can indicate a danger area.

Sending hazard warnings

Reporting hazards manually

ⓘ Automatically detected hazard warnings are sent by the vehicle.

▶ When the map is shown, tap on the [▲] current vehicle position.
The Position menu is shown.

▶ Select Report traffic incident.
A prompt is shown.

▶ Select Yes.
The Thank you for supporting accident prevention! message appears.

Route guidance with augmented reality

Overview of route guidance with augmented reality

⚠ **WARNING** Risk of accident and injury as a result of distraction, incorrect depiction or wrong interpretation of the display

The camera image of the augmented reality display is not suitable as a guide for driving.

▶ Always keep an eye on the actual traffic situation.

▶ Avoid extended observation of the camera image.

During route guidance with augmented reality a camera image with the real traffic scene is shown in the media display before a turning manoeuvre. The camera image includes additional information, for example arrows indicating a change of direction.

If the options are switched on and this additional information is available, road names and house numbers are displayed (→ page 480).

1. House number
2. Street name
3. Change of direction arrow

Route guidance with augmented reality will not be available in some situations, e.g. in the event of poor satellite reception or roads that have not been digitised.

Route guidance with augmented reality is not available in all countries.

You can watch an animation on this topic via the following link:

Activating route guidance with augmented reality

WARNING Risk of accident and injury due to imprecise positioning of additional information

The additional information from the augmented reality display may be inaccurate and is not a substitute for observing and assessing the actual driving situation.

▶ Always keep an eye on the actual traffic situation when carrying out all driving manoeuvres.

Multimedia system:

→ [⌂] ▸▸ Navigation ▸▸ [⚙]

▶ Select View.

▶ Select Augmented reality video.

▶ Activate or deactivate Augmented reality video.
The camera's video image is shown on the media display before a turning manoeuvre.

The video image includes additional information.

Showing property information for route guidance with augmented reality

Requirements:

- Augmented reality is activated (→ page 480).

Multimedia system:

→ [⌂] ▸▸ Navigation ▸▸ [⚙]

▶ Select View.

▶ Select Augmented reality video.

▶ Activate Street names and House numbers.
During route guidance, the activated options are shown as additional information in the camera image.

Map and compass

Setting the map scale

Multimedia system:

→ [⌂] ▸▸ Navigation

Zooming in

▶ When the map is shown, tap twice quickly with one finger on the media display.

or

▶ Move two fingers apart on the media display.

Zooming out

▶ Tap with two fingers on the media display.

or

▶ Move two fingers together on the media display.

ⓘ You can set the unit of measurement of the map scale (→ page 436).

Moving the map

Multimedia system:

→ [⌂] ▸▸ Navigation

▶ When the map is displayed, swipe in any direction with one finger on the media display.

The following functions are available:

- Selecting a destination on the map (→ page 457).
- Selecting a POI (→ page 455).
- Showing traffic incidents on the map (→ page 477).

▶ **To reset the map to the current vehicle position:** select [⊕] Centre .

Switching the route overview after start on or off

Multimedia system:

→ [⌂] ▸▸ Navigation ▸▸ [⚙]

▶ Select View.

▶ Activate [●] or deactivate [○] Overview of route after start.
If the option is enabled, the map shows the full route after route guidance is started and, if available, all alternative routes.

Selecting POI symbols for the map display

Multimedia system:

→ [⌂] ▸▸ Navigation ▸▸ [⚙]

POIs include restaurants and hotels, for example. These are displayed as symbols on the map. Not all POIs are available in all countries.

Personal POIs are destinations which you have saved on a USB device, for example.

ⓘ The display of POI symbols on the map can be activated or deactivated as a favourite.

▶ Select View.

▶ Select POI symbols on map [>].

▶ Switch on Hide all points of interest.
When the option is switched on, the POI symbols for all categories are shown on the map according to the settings in the POI categories.

ⓘ If the conditions are fulfilled, the POI symbols are shown with current online information (→ page 486).

Switching display of categories for quick-access on or off

▶ Switch a category on or off in the menu.

Selecting categories

▶ In the menu, select Other categories [>].
▶ Activate or deactivate Show all.
When the option is switched on, the POI symbols for all categories are shown on the map.

or

▶ Select [>] the categories.
▶ Activate or deactivate the categories.
The POI symbols for the selected categories are shown on the map.

Selecting personal POI categories

▶ In the menu, select Personal POIs [>] .
▶ Select [>] a category.
▶ Activate or deactivate Display on the map.
▶ **To issue a signal when approaching:** activate Visual warning and Acoustic notification.

Resetting the POI symbol display

▶ In the menu, select Reset POIs.
The settings are reset to the standard settings.

Selecting the display of additional information on the map

Multimedia system:

→ [⌂] ▸▸ Navigation ▸▸ [⚙]

▶ Select View.
▶ Select Show additional information.
▶ Switch the options on or off.

The following options are available:

- Current street

  If the option is enabled, it will be displayed in the navigation window.

- Scale

  If the option is switched off, the map scale is only displayed on the map when zooming.

  If the option is enabled, the map scale is permanently displayed on the map.

  The option also influences the display on the driver's display.

- Altitude
- Next junction

  If the option is switched on and the journey continues without route guidance, the name of the next intersecting street will be displayed in the navigation window.

Displaying the map version

Multimedia system:

→ [⌂] ▸▸ Navigation ▸▸ [⚙]

▶ Select View.
▶ Select Map data version.
The detail information is displayed.

ⓘ The online map update service from Mercedes me connect can be used to update the map data (→ page 33).
A message is shown in the media display when a new map version is available.

ⓘ Information about new versions of the digital map can be obtained from a Mercedes-Benz service centre.

Overview of area avoidance on the route

You can define areas along a route that you would like to avoid.

Motorways or multi-lane expressways that pass through an area to be avoided may be included in the route despite being blocked.

Avoiding a new area for the route

Multimedia system:

→ [⌂] ▸▸ Navigation ▸▸ [⚙] ▸▸ Route ▸▸ Avoid areas

▶ Select Avoid new area.

Starting using the map

▶ Select Using map.
A red rectangle appears. This designates the area that should be avoided.

▶ Move the map (→ page 481).

▶ Set the map scale (→ page 481).

▶ Select [OK].
The area is entered into the list.

Starting using destination search

▶ Select Via address entry.

▶ Enter the address (→ page 34).

▶ Select the destination in the list.
The map appears. The area is saved.

Changing an area to be avoided

Multimedia system:

→ [⌂] ▸▸ Navigation ▸▸ [⚙] ▸▸ Route ▸▸ Avoid areas

▶ Select an area in the list.

▶ Select Edit.

▶ **To move an area on the map:** swipe in any direction on the media display.

Changing the size of the area

▶ Move two fingers apart or together on the media display.

▶ Select [OK].
The area is entered into the list.

Taking the area for the route into account

▶ Select the area in the list.

▶ Switch on Avoid area.
If route guidance is active, a new route is calculated.

If there is no route yet, the setting is carried over to the next route guidance.

The route can include an area that is to be avoided in the following cases:

- The destination is located in an area that is to be avoided.
- The route includes motorways or multi-lane expressways which pass through an area to be avoided.
- There is no practical alternative route.

Deleting an area to be avoided

Multimedia system:

→ [⌂] ▸▸ Navigation ▸▸ [⚙] ▸▸ Route ▸▸ Avoid areas

Deleting an area to be avoided

▶ Select an area in the list.

- ▶ Select Delete.
- ▶ Confirm the prompt with Yes.

Deleting all areas to be avoided

- ▶ If at least two areas to be avoided are set, select Delete all.
- ▶ Confirm the prompt with Yes.

Map data update overview

As the content of a digital road map has a short life, outdated data may have a negative effect on all navigation functions. For the best MBUX navigation experience, you should install all of the map updates offered by Mercedes-Benz.

The following options are available for the update of map data:

- Online map update
- Updates from the Mercedes me Portal
- Update at a Mercedes-Benz service centre

  Additional costs can be incurred in this process.

Online map update

Requirements:

- Mercedes me connect is available.
- You have a Mercedes me user account.
- The Online Map Update service is available for your region.
- The service has been activated.

ⓘ The Online Map Update service is only available in certain countries.

Installation takes place in the background as an automatic map update.

The MBUX multimedia system installs all of the available map updates for the European regions in which the vehicle is located or is moved.

The online map update is activated at the latest after the next time the vehicle is switched on.

Updates from the Mercedes me Portal

The map data for several regions can also be updated manually. Log in with your Mercedes me user account at: https://www.mercedes-benz.de/

Follow the menu path My Mercedes Me account > My vehicles > Selection of car > Online Map Update. Select the regions to be downloaded to a storage medium.

After the map data has been copied, connect the storage medium with your vehicle. Select the notification with information about a new version of the map data and start the installation. After the MBUX multimedia system has been restarted, the updated map data is used.

Overview of map data

If map data is reinstalled in a vehicle, no activation code needs to be entered.

For map data purchased as data media, the enclosed activation code must be entered after starting the installation.

Activation codes are only ever valid for one vehicle.

In the event of the following problems, please contact a Mercedes-Benz service centre:

- The multimedia system does not accept the activation code.
- You have lost the activation code.

Displaying the compass

Multimedia system:

→ [⌂] ▸▸ Navigation

▶ When the map is shown, tap on the [▲] current vehicle position until the Position menu is shown.

▶ Select Compass.

The compass display shows the following information:

- The current direction of travel with bearing (360° format) and compass direction
- Longitude and latitude coordinates in degrees, minutes and seconds
- Number of satellites from which a signal can be received

The information is not available in every country.

Displaying Qibla

Multimedia system:

→ [⌂] ▸▸ Navigation

▶ When the map is shown, tap on the [▲] current vehicle position until the Position menu is shown.

▶ Select Alerts.

The arrow on the compass shows the direction to Mecca in relation to the current direction of travel.

The number of satellites received is shown.

ⓘ This function is not available in all countries.

Setting the map scale automatically

Multimedia system:

→ [⌂] ▸▸ Navigation ▸▸ [⚙]

▶ Select View.

▶ Activate [◒] Auto zoom.

When the option is switched on, the map scale is set automatically depending on your driving speed and the type of road.

ⓘ The automatically selected map scale can be changed manually. After a few seconds, this is automatically reset.

When the option is activated, no detailed display of the junction or a 3D image is shown in the navigation window during an upcoming driving manoeuvre.

Displaying the satellite map

Multimedia system:

→ [⌂] ▸▸ Navigation ▸▸ [⚙]

▶ Select View.

▶ Activate or deactivate Satellite map.

When Satellite map is selected, they are displayed at the following map scales:

- On-board maps

  The satellite maps are displayed in map scales from 2 km.

- Online maps

  The satellite maps are displayed in high-resolution map scales from 10 m.

When Satellite map is not selected, no satellite maps are displayed.

ⓘ The satellite maps for these map scales are not available in all countries.

Displaying the range

Requirements:

- There is an Internet connection.
- Mercedes me connect is available.
- You have a Mercedes me user account.
- The vehicle is connected with the user account and you have accepted the Mercedes me connect terms of use.

  Further information can be found at: https://www.mercedes.me
- The service is available and has been activated.

Multimedia system:

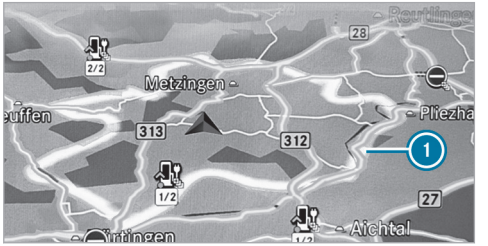

ⓘ Display of the total range

▶ Select View.

▶ Range .

The range is shown on the map with the following displays:

- For petrol and diesel vehicles: green display
- For hybrid vehicles:

  Total range: green display ⓘ

  Electrical range: blue display

When the lower reserve capacity is reached then the range display on the map is switched off.

ⓘ The range display on the map is not available in all countries.

Displaying online map contents

Requirements:

- There is an Internet connection.
- Mercedes me connect is available.
- You have a Mercedes me user account.
- The vehicle is connected with the user account and you have accepted the Mercedes me connect terms of use.

  Further information can be found at: https://www.mercedes.me
- The service is available and has been activated.

Multimedia system:

▶ Select View.

▶ Switch on an online service, e.g. Weather. Current weather information is displayed on the navigation map, e.g. temperature or cloud cover.

The service information is not shown in all map scales, e.g. weather symbols.

ⓘ The display of online map content is not available in all countries.

Parking service

Notes on the parking service

! NOTE Vehicle damage due to failure to observe the maximum permissible clearance height

If the vehicle height exceeds the maximum permissible clearance height, the roof and other vehicle parts may be damaged.

▶ Please observe the indicated maximum clearance height.

▶ If the vehicle exceeds the permissible clearance height, do not drive in.

▶ Take the modified vehicle height in the case of roof superstructures or other carrier systems into account.

ⓘ This service is not available in all countries.

Selecting parking options

! NOTE Vehicle damage due to failure to observe local information and parking conditions

The data is based on the information provided by the respective service providers.

Mercedes-Benz does not guarantee the accuracy of the information provided in relation to the car park or parking area.

▶ Always observe the local information and conditions.

Requirements:

- Navigation Services is activated in your Mercedes me user account.
- The parking service is part of the scope of the Navigation Services.
- Parking is activated (→ page 488).

Multimedia system:

→ [⌂] ▸▸ Navigation

▶ Tap on [P] the map.

or

▶ In the route overview, select [P] Parking spaces (→ page 465).

▶ Select the search position and search filter, e.g. Near destination and Multi-storey car parks.

The map shows car parks suited to the selected settings.

▶ Select a parking option.

The following information is displayed (if available):

- Destination address, distance from current vehicle position and arrival time
- Information on the car park, e.g.
  - Opening times
  - Parking charges
  - Current occupancy

- Maximum parking time
- **Maximum access height**

  The maximum access height shown by the parking service does not replace the need for observation of the actual circumstances.

- Available payment options (Mercedes pay, coins, bank notes, cards)
- Details on parking tariffs
- Number of available parking spaces
- Payment method (e.g. at parking meters)
- Services/facilities at the parking option
- Telephone number

▶ Calculate the route (→ page 459).

The following functions can be used (if available):

- Searching for POIs in the vicinity.
- Saving the destination.
- Placing a call at the destination.
- Sharing the destination via the QR code.
- Calling up the web address.
- Showing the destination on the map.

Displaying parking options on the map

Requirements:

- Navigation Services is activated in your Mercedes me user account.
- The parking service is part of the scope of the Navigation Services.

Multimedia system:

→ [⌂] ▸▸ Navigation ▸▸ [⚙]

▶ Switch on Parking.
The parking options within the vicinity of the current vehicle position are shown.

Prior booking of a parking space

Requirements:

- Navigation Services is activated in your Mercedes me user account.
- The parking service is part of the scope of the Navigation Services.
- You have registered with your payment details for the payment of parking in the Mercedes me Portal with Mercedes pay and the respective contract partner.
- Parking is activated (→ page 488).

ⓘ This option is not available in all countries.

Multimedia system:

→ [⌂] ▸▸ Navigation

▶ Select a parking option on the map.

▶ If a parking space available to book has been selected, select Book parking space.

▶ Select the desired booking period. Take note of the cancellation conditions.
If the parking space is available for the selected period, the price will be shown.

▶ Press [OK] to confirm.

▶ In the booking overview, confirm with Book.

▶ If required, enter the Mercedes me PIN.
The parking space will be booked in the background.

A booking confirmation including a car park ticket will be sent to your registered email address.

Making use of or cancelling the booking

- Start the Mercedes me App on your smartphone.
- Open Menu.
- Select My transactions.
- Select Parking transactions.
- Select the desired booking.
- **To make use of the booking:** select Show car park ticket.

or

- **To cancel the booking:** select Cancel booking.

ⓘ If possible, a parking space booking can be cancelled up to the stated time. If a booking cannot be cancelled, this will already be shown to you during the booking procedure.

Paying parking charges

Requirements:

- Navigation Services is activated in your Mercedes me user account.
- The parking service is part of the scope of the Navigation Services.
- You have registered with your payment details for the payment of parking in the Mercedes me Portal with Mercedes pay and the respective contract partner.
- Parking is activated (→ page 488).

ⓘ This option is not available in all countries.

Multimedia system:

- Select a parking option on the map.
- If a car park that can be paid for has been selected, scroll down in the parking details.
- Select Payment.
  Once the vehicle has reached a parking position with payment function and the vehicle is switched off, a message appears. Using this message you can pay from the vehicle and start the payment process.

Starting a payment procedure

- Acknowledge the message.
- Please note the maximum parking period displayed and any existing additional limitations. If required, a message will inform you about the necessity of displaying information confirming the online payment for the parking space.
- Select Start the payment process.
- If required, enter the Mercedes me PIN.
- Press OK to confirm.
  The successful start of your parking transaction is shown.
- Complete the booking with OK.
- **To cancel a parking transaction:** after receiving the confirmation request, select Cancel. Minimum charges may be incurred.

Ending a parking transaction

- Stop the active transaction using the Mercedes me app.
  You receive a summary of the procedure and the costs.

  If an uncompleted parking transaction is detected for your vehicle as you continue your journey, a message will appear asking whether you would like to end it.

▶ Acknowledge the message.
When the parking transaction is stopped successfully, another message appears with the details about your completed parking.

Dashcam

Notes on the dashcam

! **NOTE** Risk of legal consequences due to violation of legal regulations and data protection provisions

You are legally responsible for operation and use of the dashcam functions.

The legal requirements relating to operation and use of the dashcam can vary depending on the country in which the dashcam is operated.

This function is not permitted in all countries.

▶ Before using the dashcam, read up on the content of the legal regulations, in particular the data protection requirements in the respective country of use.

▶ Observe the legal regulations, in particular the data protection requirements.

ⓘ Observe the following instructions for safe operation:

- Only use FAT32 or exFAT formatted USB storage devices.
- Use USB-IF certified USB storage devices.

  USB-IF is a non-profit corporation and stands for USB Implementers Forum. Based on the USB specification, USB-IF certifies, for example, USB versions, corresponding cables and plugs as well as energy supply processes via the USB interface.
- USB storage devices may be damaged if often or permanently overwritten at high speed. Mercedes-Benz recommends a high-quality external SSD drive.

  The abbreviation SSD stands for Solid State Drive.

ⓘ The file size and therefore the duration of single recording is limited by the limitations of the USB flash drive format. So FAT32 formatted USB flash drives do not allow files larger than 4 GB, for example.
When the file size is reached, the recording stops and you receive a notification.

ⓘ The following functions are available in the Gallery app:

- Switching write protection on or off
- Deleting video files

Additional information about the Gallery app .

Selecting a USB device for a video recording with the dashcam

Requirements:
- At least one USB device is connected with the multimedia system (→ page 540).

Multimedia system:

⟶ ⌂ ▸▸ Apps ▸▸ Dashcam

▶ Select the USB symbol.

▶ Select the USB device.

ⓘ When USB devices contain multiple partitions, recorded video files are not always displayed in the recording list.
Mercedes-Benz recommends that you use USB devices with one partition.

Starting or stopping loop recording with the dashcam

Requirements:

- For recording and saving a video file: a USB device is connected with the multimedia system (→ page 540).
- The vehicle is switched on.

Multimedia system:

→ ⌂ ▸▸ Apps ▸▸ Dashcam

▶ If several USB devices are connected with the multimedia system, select a USB device (→ page 490).
If no USB device is selected, a selection is made automatically when recording starts.

▶ **To select recording mode:** select Loop recording.
Loop recording records several short video files. When the memory is full, recording is continued automatically. In doing so, other files will be overwritten starting with the oldest file.

▶ **To start:** select Start recording.
The length of the recording is shown. The Do not remove the storage medium during recording. Before removing the storage medium, eject it first. message appears. The video file is stored on the USB device.

▶ **To end:** select End recording.

ⓘ In some countries, geo-coordinates (longitude and latitude) are shown in the video image. For technical reasons, the geo-coordinates may show greater inaccuracies.

A report may appear in the following cases:

- The camera is not functional, the Camera unavailable message appears.

  Have the camera checked in a Mercedes-Benz service centre.

- If the country border indication has been switched on (→ page 492).
- If an outdoor recording is started with the camera app during a dashcam recording, the dashcam recording pauses and resumes automatically after the camera recording is finished. A notification to this effect is displayed.

Starting or stopping individual recordings with the dashcam

Requirements:

- For recording and saving a video file: a USB device is connected with the multimedia system (→ page 540).
- The vehicle is switched on.

Multimedia system:

→ ⌂ ▸▸ Apps ▸▸ Dashcam

▶ If several USB devices are connected with the multimedia system, select a USB device (→ page 490).
If no USB device is selected, a selection is made automatically when recording starts.

▶ **To select recording mode:** select Individual recording.
Individual recording stops recording when the memory limit is reached. An individual recording is automatically protected against being overwritten.

▶ **To start:** select Start recording.
The length of the recording is shown. The Do not remove the storage medium during recording. Before removing the storage medium, eject it first. message appears. The video file is stored on the USB device.

▶ **To end:** select End recording.

ⓘ In some countries, geo-coordinates (longitude and latitude) are shown in the video image. For technical reasons, the geo-coordinates may show greater inaccuracies.

A report may appear in the following cases:

- Individual recording: the memory is full or there are only a few minutes recording time available. The video recording stops or will be stopped imminently.

  Change the USB device or delete a video file.

- The camera is not functional, the Camera unavailable message appears.

  Have the camera checked in a Mercedes-Benz service centre.

- If the country border indication has been switched on (→ page 492).

- If an outdoor recording is started with the camera app during a dashcam recording, the dashcam recording pauses and resumes automatically after the camera recording is finished. A notification to this effect is displayed.

Configuring dashcam settings

Requirements:

- A USB device is connected with the multimedia system (→ page 540).

Multimedia system:

⟶ [⌂] ▸▸ Apps ▸▸ Dashcam

▶ Select [⚙].

Receiving notifications after passing a border crossing

▶ Switch on National border alert .
A message is shown if video is being recorded and the vehicle passes a border.

ⓘ This function is not available in all countries.

Starting automatic video recording

▶ Select Automatic loop recording.

▶ Switch on Automatic loop recording.
When the vehicle is started, video recording starts automatically.

ⓘ This function is not available in all countries.

Telephone

Telephony

Notes on telephony

⚠ **WARNING** Risk of distraction from operating integrated communication equipment while the vehicle is in motion

If you operate communication equipment integrated in the vehicle when driving, you could be distracted from the traffic situation. This could also cause you to lose control of the vehicle.

- ▶ Only operate this equipment when the traffic situation permits.
- ▶ If you cannot be sure of this, stop the vehicle whilst paying attention to road and traffic conditions and operate the equipment with the vehicle stationary.

⚠ **WARNING** Risk of accident from operating mobile communication equipment while the vehicle is in motion

Mobile communication devices distract the driver from the traffic situation. This can also cause the driver to lose control of the vehicle.

- ▶ As a driver, only operate mobile communication devices when the vehicle is stationary.
- ▶ As a vehicle occupant, use mobile communication devices only in the designated area, e.g. in the rear passenger compartment.

You must observe the legal requirements for the country in which you are currently driving when operating the multimedia system and mobile communication equipment in the vehicle.

⚠ **WARNING** Risk of injury due to objects being stowed incorrectly

If objects in the vehicle interior are stowed incorrectly, they can slide or be thrown around and hit vehicle occupants. In addition, cup holders, open stowage spaces and mobile phone receptacles cannot always retain all objects within.

There is a risk of injury, particularly in the event of sudden braking or a sudden change in direction.

- ▶ Always stow objects so that they cannot be thrown around in such situations.
- ▶ Always make sure that objects do not protrude from stowage spaces, luggage nets or stowage nets.
- ▶ Close the lockable stowage spaces before starting a journey.
- ▶ Always stow and secure heavy, hard, pointed, sharp-edged, fragile or bulky objects in the boot/load compartment.

Observe the additional information on stowing mobile communications devices correctly:

- Loading the vehicle (→ page 183)
- Stowing and securing the mobile phone (→ page 196)

Further information can be obtained from a Mercedes-Benz service centre or at: https://www.mercedes-benz-mobile.com/

Telephone menu overview

1. Bluetooth® device name of the currently connected mobile phone/of the mobile phone
2. Bluetooth® device name of the other currently connected mobile phone/of the mobile phone
3. Signal strength of the mobile phone network
4. Battery status of the connected mobile phone
5. Options
6. Messages
7. Calls up devices
8. Numerical pad
9. Starts contact search

Bluetooth® profile overview

Bluetooth® profile of the mobile phone	Function
PBAP (Phone Book Access Profile)	Contacts are automatically displayed in the multimedia system
MAP (Message Access Profile)	Message functions can be used
HFP (Hands Free Profile)	Wireless telephony is available

Telephony operating modes overview

Depending on your equipment, the following telephony operating modes are available:

- A mobile phone is connected to the multimedia system via Bluetooth® (→ page 495).
- Two mobile phones are connected with the multimedia system via Bluetooth® (two phone mode) (→ page 495).
  - You can use all the functions of the multimedia system with both mobile phones.

ⓘ Irrespective of this, Bluetooth® audio functionality can by used with any mobile phone (→ page 540).

Information on telephony

The following situations can lead to the call being disconnected while the vehicle is in motion:

- There is insufficient network coverage in the area
- You move from one transmission/reception station to another and no communication channels are free
- The SIM card used is not compatible with the network available
- A mobile phone with "Twincard" is logged into the network with the second SIM card at the same time

The multimedia system supports calls in HD Voice® for improved speech quality. A requirement for this is that the mobile phone and the mobile phone network provider of the person you are calling support HD Voice® .

Depending on the quality of the connection, the voice quality may fluctuate.

Connecting a mobile phone

Requirements

- Bluetooth® is activated on the mobile phone (see the manufacturer's Owner's Manual).
- Bluetooth® is activated on the multimedia system (→ page 434).

Multimedia system:

⟶ [⌂] ▸▸ Phone ▸▸ [⚙] ▸▸ Devices ▸▸ Devices

Searching for a mobile phone

▶ Select Connect new device.

Authorising a mobile phone

▶ Select a mobile phone.
A code is displayed in the multimedia system and on the mobile phone.

▶ **If the codes match:** confirm the code on the mobile phone.

ⓘ For older mobile phone models, enter a 1 to 16-digit number code on the mobile phone and on the multimedia system for authorisation.

ⓘ Up to 15 mobile phones can be authorised on the multimedia system.
Authorised mobile phones are reconnected automatically.

ⓘ The connected mobile phone can also be used as Bluetooth® audio equipment (→ page 540).

You can watch an animation on this topic via the following link:

Connecting a second mobile phone (two phone mode)

Requirements

- At least one mobile phone is already connected to the multimedia system via Bluetooth®.

Multimedia system:

⟶ [⌂] ▸▸ Phone ▸▸ [⚙] ▸▸ Devices ▸▸ Devices

▶ Select Connect new device.

▶ Select the mobile phone.

▶ In some cases, if the query appears, confirm the selection of the mobile phone pair with the Device name 1 + Device name 2 option.
The selected mobile phone is connected to the multimedia system.

Interchanging mobile phones (two phone mode)

Multimedia system:

⟶ [⌂] ▸▸ Phone

Both mobile phones are shown individually in separate tabs.

- Select the tab with the desired mobile phone. Selecting the tab of a specific mobile phone displays the associated telephone contents.

  Selecting the other tab switches the view to the other telephone.

  The submenus in the telephone menu (e.g. contacts, call lists, messages) relate to the currently selected mobile phone with the exception of the telephone settings. In the telephone settings, settings can be made for both mobile phones.

Changing the function of a mobile phone

Multimedia system:

→ [⌂] ▸▸ Phone ▸▸ [⚙] ▸▸ Devices ▸▸ Devices

Activating a function

- Select a grey symbol in the line of a mobile phone.
  The corresponding function is activated.

Deactivating a function

- **One function is active:** select the coloured symbol in the line of a mobile phone.
  The mobile phone is disconnected from the multimedia system.
- **Several functions are active:** de-select an active function in the line of one of the mobile phones.
  The corresponding function is deactivated.

Replacing mobile phones

Multimedia system:

→ [⌂] ▸▸ Phone ▸▸ [⚙] ▸▸ Devices ▸▸ Devices

No authorised mobile phone available:

- Select Connect new device.
- Select a mobile phone.
- **Newly authorised mobile phone:** confirm the numerical code on the mobile phone.

Using in single telephone mode

- Select Device name.
  A newly authorised mobile phone is connected in single telephone mode.

  If the mobile phone has already been authorised and connected in single telephone mode, it is connected again in single telephone mode.

  If a mobile phone is already authorised and has been connected in two phone mode with another mobile phone, a query may come, whether the mobile phone should in future be operated in single telephone mode or connected with another mobile phone in two phone mode.
- If required, confirm the query about operating mode (single telephone or two phone mode) by confirming the Device name option.

Using in two phone mode

- Select Device name 1 + Device name 2.
  A newly authorised mobile phone is connected with the selected mobile phone in two phone mode.

If the mobile phone has already been authorised and connected in single telephone mode, it will be connected in future with the selected mobile phone in two phone mode.

If the mobile phone was previously connected with another mobile phone, this connection is cancelled.

Disconnecting or deleting a mobile phone

Multimedia system:

→ [⌂] ▸▸ Phone ▸▸ [⚙] ▸▸ Devices

Disconnecting a mobile phone

▶ Select Disconnect.
If applicable, the mobile phone will be automatically reconnected when the vehicle is next started.

Deleting a mobile phone

▶ Select Devices.

▶ Select [•••] in the line of the mobile phone.

▶ Select Delete device.
The mobile phone is deleted from the system.

Using a mobile phone with near-field communication (NFC)

Requirements

- NFC is activated on the mobile phone (see the manufacturer's operating instructions)
- The mobile phone's screen is switched on and unlocked (see the manufacturer's operating instructions)

Connecting a mobile phone

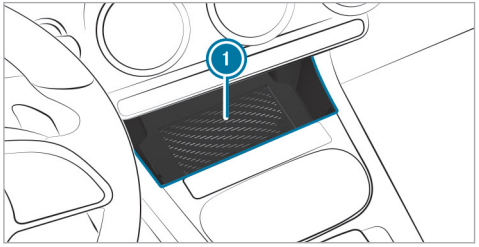

▶ Hold the NFC interface of the mobile phone (see manufacturer's operating instructions) on mat ① or place the mobile phone on mat ① with the display facing upwards.

▶ Follow the additional prompts on the media display to connect the mobile phone. Connect the mobile phone in single telephone mode (→ page 495). Connect the mobile phone in two phone mode (→ page 495).

Replacing a mobile phone

▶ Hold the NFC interface of the mobile phone (see the manufacturer's operating instructions) against NFC interface ① in the front stowage compartment.

▶ Follow the additional prompts on the media display to replace the mobile phone in single or two phone mode (→ page 495).

▶ If required, confirm the prompts on your mobile phone (see the manufacturer's operating instructions).

ⓘ If your mobile phone supports wireless charging, it can be charged on the mat (→ page 196).

ⓘ If the mobile phone is not charging, switch off NFC on the mobile phone (see the manufacturer's operating instructions).

Further information can be found at: https://www.mercedes-benz-mobile.com/

Setting the reception and transmission volume

Requirements:

- A mobile phone is connected (→ page 495).

Multimedia system:

↳ [⌂] ▸▸ Phone ▸▸ [⚙] ▸▸ Devices ▸▸ Devices

This function ensures optimal language quality.

ⓘ Please note that the respective mobile phone must be selected for adjustment of the reception and transmission volume.

▶ Select [•••] in the line of the mobile phone.

▶ Select Volume.

▶ Set the reception and transmission volume using Reception volume and Transmission volume.

Further information on the recommended reception and transmission volume: https://www.mercedes-benz-mobile.com/

Setting the ringtone

Multimedia system:

↳ [⌂] ▸▸ Phone ▸▸ [⚙] ▸▸ Ringtones

▶ Set the ringtone.

ⓘ If the mobile phone supports the transfer of the ringtone, you will hear the ringtone of the mobile phone instead of that of the vehicle audio system.

Starting or stopping mobile phone voice recognition

Requirements

- At least one mobile phone is connected to the multimedia system (→ page 495).
- The tab with the mobile phone for which voice recognition should be started is selected (→ page 495).

Starting mobile phone voice recognition

▶ Press and hold the [🎤] button on the multifunction steering wheel for more than one second.
Voice recognition is started for the currently selected mobile phone.

Stopping mobile phone voice recognition

▶ Press the [🔇] or [☎] button on the multifunction steering wheel.

ⓘ If a mobile phone is connected via Smartphone Integration, the voice recognition of this mobile phone is always started or stopped.

Note about contact suggestions

The multimedia system can show contact suggestions based on frequently used contacts, outgoing calls and text messages. For this, the Allow contact suggestions option must be switched on (→ page 437).

When you open the call list or the message menu, contacts which you can call or write to will be suggested to you. Suggestions will be shown in the Suggestionstab.

ⓘ The multimedia system does not use the content of messages for suggestions.

Selecting options for contact suggestions

Requirements

- The Allow contact suggestions option is switched on (→ page 437).
- The multimedia system has gathered sufficient data in order to show contact suggestions.

Multimedia system:

→ [⌂] ▸▸ Phone

▶ Select Call list or Contacts.

▶ Select Suggestions.

▶ Select [•••] in the line of the suggested contact.

The following option is available for selection:

- Do not suggest now

Calls

Telephone operation

Multimedia system:

→ [⌂] ▸▸ Phone

Making a call by entering numbers

▶ Select [⠿].

▶ Enter a number.

▶ Select [✆].
The call is made.

Accepting a call

▶ Select [✆] Accept .

Rejecting a call

▶ Select [☎] Reject .

Answering a call with a message

▶ Select [✉] Answer w SMS.

Ending a call

▶ Select [☎].

Putting a call on In-Car Office's to-do list

▶ Select [✆] Put call on In-Car Office's to-do list.

Activating functions during a call

The following functions are available during a call:

- [☎] End call
- [🎤] Micro. off
- [⠿] Keypad (show to send DTMF tones)
- [👤+] Add call
- Hands-free

  Transfer the call, e.g. to Front, Rear or All seats.
- Private mode

  Transfer the call to the telephone or headphones, for example.

▶ Select a function.

ⓘ Observe that the functions and symbols can vary depending on the vehicle equipment.

Conducting calls with several participants

Requirements

- There is an active call (→ page 499).
- Another call is being made.

Switching between calls

▶ Select the contact.
The selected call is active. The other call is on hold.

Activating a call on hold

▶ Select the contact of the call on hold.

Conducting a conference call

▶ Select Conference.
The new participant is included in the conference call.

Ending an active call

▶ Select End call.

ⓘ On some mobile phones, the call on hold is activated as soon as the active call is ended.

Accepting or rejecting a waiting call

Requirements

- There is an active call (→ page 499).

If you receive a call while already in a call, a message is displayed.

Depending on the mobile phone and mobile phone network provider you will hear a call waiting signal.

Alternatively, in two phone mode you will hear an acoustic signal when the call goes through to the other (not yet active) mobile phone.

▶ Select Accept.
The incoming call is active.

If only one mobile phone is connected with the multimedia system, the previous call will be put on hold.

If during a call you accept a call with the other mobile phone when in two phone mode then the existing call is ended.

or

▶ Select Answer w SMS.
The incoming call is not accepted.

You answer with a message.

or

▶ Select Reject.

ⓘ The function and the behaviour depend on your mobile phone network provider as well as on the mobile phone (see the manufacturer's operating instructions).

Using the international dialling code

Multimedia system:

→ ⌂ ▸▸ Phone ▸▸ ⠿

▶ Press and "0" until a "+" appears in the selection field.

▶ Enter the numbers of the country code, regional code and the telephone number.

▶ Select ☎.
The call is made.

Contacts

Information about the contacts menu

The contacts menu contains all contacts from existing data sources, e.g. mobile phone or data storage medium.

Depending on the data source, it is possible to save/load the following number of contacts:

- Permanently saved contacts: 3,000 entries
- Contacts loaded from the mobile phone: 5,000 entries per mobile phone

From the contacts menu, you can perform the following actions:

- Make a call, for example call a contact (→ page 502)
- Navigation (→ page 456)
- Compose messages (→ page 504)
- Additional options (→ page 502)

Mobile phone contacts are automatically displayed when a mobile phone is connected to the multimedia system (→ page 495).

Downloading mobile phone favourite contacts

If the mobile phone supports the function, the favourites of the mobile phone are automatically loaded and appear in the overview of the phone menu.

Calling up contacts

Multimedia system:

→ [⌂] ▸▸ Phone ▸▸ Contacts

The following options can be used to search for contacts:

- Searching by initials
- Searching by name
- Searching by phone number

▶ Enter characters into the search field.

▶ Select the contact.

A contact can contain the following details:

- Phone numbers
- Navigation addresses
- Internet address
- Email addresses
- Relationship (if set)

Managing the format of a contact's name

Multimedia system:

→ [⌂] ▸▸ Phone ▸▸ [⚙]

▶ Select Contacts.

▶ Select Name format.

▶ Select an option.

Overview of importing contacts

Importing contacts into the contacts menu

Source	Requirements
USB device	The USB device is connected with the USB port.
Mobile phone	A mobile phone is connected to the multimedia system via Bluetooth®. Contacts are available.

ⓘ Note that the imported contacts remain in the vehicle and can be accessed at any time regardless of the connected mobile phones.

Importing contacts into the contacts menu

Multimedia system:

⟶ [⌂] ▸▸ Phone ▸▸ [⚙] ▸▸ Contacts ▸▸ Import contacts

- ▶ Select a mobile phone <device name>, from which the contacts should be imported.
- ▶ Select an option.

Saving a mobile phone contact

Multimedia system:

⟶ [⌂] ▸▸ Phone ▸▸ Contacts

- ▶ Select [>] in the line of the mobile phone contact.
- ▶ Select [•••].
- ▶ Select Save.
- ▶ Select Yes.
  The contact saved in the multimedia system is identified by the MBUX symbol.

Calling a contact

Multimedia system:

⟶ [⌂] ▸▸ Phone ▸▸ Contacts

- ▶ Select [🔍] Search contacts.
- ▶ Enter characters into the search field.
- ▶ Select the contact.
- ▶ Select the telephone number.
  The number is dialled.

Selecting further options in the contacts menu

Multimedia system:

⟶ [⌂] ▸▸ Phone ▸▸ Contacts

- ▶ Select [>] in the line of the contact.
- ▶ Select [•••].
- ▶ Select an option.

Deleting contacts

Requirements

- The contacts are saved in the vehicle.
- To delete an individual contact, this has been imported manually into the vehicle.

Multimedia system:

⟶ [⌂] ▸▸ Phone

Deleting all contacts

- ▶ Select [⚙].
- ▶ Select Contacts.
- ▶ Select Delete all MBUX contacts.
- ▶ Select an option.

Deleting a contact

- ▶ Select Contacts.
- ▶ Select [>] in the line of the contact.
- ▶ Select [•••].
- ▶ Select Delete contact.
- ▶ Select Yes.

Call list

Overview of the call list

Depending on whether your mobile phone supports the PBAP Bluetooth® profile or not, this can have different effects on the presentation and functions of the call list.

If the PBAP Bluetooth® profile is supported, the effects are as follows:

- The call lists from the mobile phone are displayed in the multimedia system.
- When connecting the mobile phone, you may have to confirm the connection for the PBAP Bluetooth® profile.

If the PBAP Bluetooth® profile is not supported, the effects are as follows:

- The multimedia system generates a call list independently as soon as calls are made in the vehicle.
- The call list is not synchronised with the call lists in the mobile phone.

Making a call from the call list

Multimedia system:

Phone

▶ Select Call list.

▶ Select an entry.
The call is made.

Selecting additional options in the call list

Multimedia system:

Phone

▶ Select Call list.

▶ For contacts that are in the address book: select options.
The contact details are called up.

▶ For contacts where only one number is shown (not in the address book): select .

Deleting the call list

Multimedia system:

Phone <Device name>
Devices

▶ Select Delete call list.

▶ Select Yes.

ⓘ This function is only available if your mobile does not support the PBAP Bluetooth® profile.

Text messages

Overview of message functions

In the message menu you can receive text messages and create and send them with the help of the MBUX voice assistant.

If the connected mobile phone supports the Bluetooth® MAP profile, the message functions can be used on the multimedia system.

You can obtain further information about settings and supported functions of Bluetooth®-capable mobile phones at a Mercedes-Benz service centre or at: https://www.mercedes-benz-mobile.com/

Some mobile phones require further settings after being connected to the multimedia system to activate the messaging functionality (see manufacturer's operating instructions).

Setting message displays

Multimedia system:

Phone <Device name>
Devices

▶ Select Message display.

▶ Select On or Off.

Reading messages

Multimedia system:

[home] ▸▸ Phone ▸▸ <Device name> ▸▸ [messages]

Using the read-aloud function

A message list is shown.

▶ To read aloud, select the [read aloud] symbol at a conversation.
The message is read aloud.

Creating and sending a new message

Requirements

- There is an Internet connection.
- At least one mobile phone with reception is connected.
- If applicable, the message function must be activated on the mobile phone.

Multimedia system:

[home] ▸▸ Phone ▸▸ <Device name> ▸▸ [messages]

▶ Using the MBUX voice assistant, speak the voice command **Send a message to**, and name the desired contact (→ page 399).

Dictating text

▶ Say the message.
You are guided by the voice dialogue.

Replying to a message in the messaging history

Multimedia system:

[home] ▸▸ Phone ▸▸ <Device name> ▸▸ [messages]

A message list is shown.

▶ Select [>] next to a contact.
The messaging history with this contact is shown. You will be guided through the steps with the help of a voice dialogue.

▶ Say the message.

Forwarding messages

Multimedia system:

[home] ▸▸ Phone ▸▸ <Device name> ▸▸ [messages]

A message list is shown.

▶ Speak the voice command **Forward message**.
You are guided by the voice dialogue.

Calling a message sender

Multimedia system:

[home] ▸▸ Phone ▸▸ <Device name> ▸▸ [messages]

A message list is shown.

▶ Select [>] next to a contact.
The messaging history with this contact is shown.

▶ Select [•••].

▶ Select Call.

Using telephone numbers, URLs or email addresses from a text message

Requirements

- An Internet connection is available to call up a URL.

Multimedia system:

Phone ▸▸ <Device name> ▸▸

A message list is shown.

▶ Select ❯ next to a contact.
The messaging history with this contact is shown.

▶ Select a telephone number or a URL in the message.
If a URL is selected the web browser opens.

If a telephone number is selected the following options are available:

- Call
- New message

or

▶ **If In-Car Office and the email function are available:** select an email address.
In-Car Office opens.

ⓘ The availability of In-Car Office is country-dependent.

▶ Select an option.

Deleting a message

Multimedia system:

Phone ▸▸ <Device name> ▸▸

A message list is shown.

▶ Select a contact.

▶ Press and hold on a message.

▶ **To delete the message:** select Delete.

In-Car Office

In-Car Office functions

Using In-Car Office, you can connect your online services to the multimedia system.

The following functions are available:

- Calendar

  Showing appointments and triggering actions, e.g. reading aloud, placing a call, navigating
- E-mail

  Reading, reading aloud, creating, answering and forwarding e-mails
- Tasks and calls

  Managing tasks and pre-booked calls
- Voice input

  Creating appointments/reminders and tasks

ⓘ Alternatively, you can record text contents via the MBUX voice assistant or via the dictation function.
Further information on the MBUX Voice Assistant (→ page 400).

ⓘ Please note that certain functions are only available when the vehicle is stationary.

Calling up In-Car Office

Requirements:

- You have a Mercedes me user account.
- The In-Car Office service is activated in your Mercedes me user account.

- You have a user account with an online service, for example Office 365 or Gmail.

  In this way, appointments, e-mails and tasks can be synchronised and facilitated.

Multimedia system:

→ [⌂] ▸▸ Apps

▶ Select In-Car Office.
Individual functions from In-Car Office can be called up.

Linking a user account

▶ Select the desired online service.

▶ Scan the QR code.

▶ Follow the instructions on the device.

Selecting calendar functions in In-Car Office

Multimedia system:

→ [⌂] ▸▸ Apps ▸▸ In-Car Office ▸▸ Calendar

▶ Select an appointment.

The following functions are available:

- [🔊] Read aloud
- [✆] Call
- [➢] Navigate
- [🗑] Delete

▶ Select a function.

ⓘ Functions are available if corresponding appointment information is saved.

Examples of this are:

- If a telephone number has been saved for the appointment, Call is available.
- If a navigable address has been saved in the Online Account for the appointment, Navigate is available.

Selecting functions of Tasks & Calls in "In-Car Office"

Multimedia system:

→ [⌂] ▸▸ Apps ▸▸ In-Car Office ▸▸ Tasks & calls

▶ Select a function for an entry.

The following functions are available:

- Reading aloud [🔊]
- Placing a call [✆]

  This task function requires a telephone number.
- Marking as completed [☑]

  In the current edit, an entry that has been marked as completed can be marked as open again by removing the tick.
- Deleting [🗑]
- Displaying details [>]

Marking an entry as completed in Tasks & Calls

Multimedia system:

→ [⌂] ▸▸ Apps ▸▸ In-Car Office ▸▸ Tasks & calls

▶ Select Tasks & calls.
An overview appears.

▶ Select [☑].

Reading and managing e-mails

Multimedia system:

→ [⌂] ▸▸ Apps ▸▸ In-Car Office ▸▸ E-mail

▶ Select an e-mail.
The e-mail is opened.

Additional functions are available:

- Reading e-mails
- Answering e-mails (→ page 507)
- Forwarding e-mails (→ page 507)
- Deleting e-mails

Creating new e-mails

Multimedia system:

Apps ▸▸ In-Car Office ▸▸ E-mail

▶ Select Create e-mail .

▶ Select ⊕.

▶ Enter an e-mail address directly via the keyboard.

or

▶ Select an e-mail address from the contacts.

ⓘ Contacts can be used from the contacts menu or from linked online services such as Office 365 or Gmail. Further information about the contacts menu (→ page 501).

ⓘ Please note that e-mails can only be written when the vehicle is stationary.

▶ Enter the subject and text of the e-mail in the corresponding fields with the keypad.

▶ Select Send.

Answering e-mails

Multimedia system:

Apps ▸▸ In-Car Office ▸▸ E-mail

▶ Select an e-mail.

▶ Select Reply.

▶ Enter the e-mail text in the corresponding field using the keypad.

▶ Select Send.

ⓘ Please note that e-mails can only be written when the vehicle is stationary.

Forwarding e-mails

Multimedia system:

Apps ▸▸ In-Car Office ▸▸ E-mail

▶ Select an e-mail.

▶ Select Forward.

▶ **To forward with attachment:** select Forward with attachment.

ⓘ Contacts can be used from the contacts menu or from linked online services such as Office 365 or Gmail. Further information about the contacts menu (→ page 501).

ⓘ Forwarding with an attachment is only possible if an attachment is available.

▶ **To forward without attachment:** select Forward without attachment.

▶ Enter the e-mail text in the corresponding field using the keypad.

▶ Select Send.

Operating In-Car Office using the MBUX Voice Assistant and dictation function

Multimedia system:

Apps ▸▸ In-Car Office ▸▸ E-mail

Operating In-Car Office using the dictation function

The dictation function allows you to dictate text content, such as the subject or text of an e-mail, instead of typing the content using the keyboard.

ⓘ The dictation function is not available everywhere with the full range of functions. For the first-time activation of the function it may be necessary to accept the Mercedes me connect terms of use in your Mercedes me user account.

The following is an example of how you can dictate the subject and text of an e-mail.

- Select [+] Create e-mail .
- Add recipients using ⊕.
- Select [🎤].
  The dictation function is started.
- Dictate the subject and text of the e-mail.
  After the voice input has been processed, it is shown as text.
- Select Send.

Operating In-Car Office using the MBUX Voice Assistant

With the voice control of the MBUX Voice Assistant you can operate various functions of In-Car Office and speak in text contents.

ⓘ Further information on operating the MBUX Voice Assistant (→ page 399).

The following are examples of some voice commands that you can use to operate In-Car Office.

- **To write new e-mail:** say the voice command I want to send an e-mail to John Doe.
  You are guided by the dialogue.
- **To reply to an e-mail:** say the voice command Reply to e-mail.
  You are guided by the dialogue.
- **To forward an e-mail:** say the voice command Forward e-mail.
  Dictate the text of the e-mail.
- **To show tasks:** say the voice command Show my tasks.
  The tasks are shown.
- **To create a calendar entry:** say the voice command Create a calendar entry tomorrow at 9 a.m..
  You are guided by the dialogue.

Apple CarPlay®

Overview of Apple CarPlay®

⚠ **WARNING** Risk of distraction from information systems and communications equipment

If you operate information systems and communication devices integrated in the vehicle when driving, you could be distracted from the traffic situation. This could also cause you to lose control of the vehicle.

- Only operate this equipment when the traffic situation permits.
- If you cannot be sure of this, stop the vehicle whilst paying attention to road and traffic conditions and operate the equipment with the vehicle stationary.

You must observe the legal requirements for the country in which you are currently driving when operating the multimedia system.
iPhone® functions can be used via the multimedia system using Apple CarPlay®. They are operated

using the touchscreen, Touch Control or Siri® voice control. You can activate voice control by pressing and holding the [ ] button on the multifunction steering wheel.

ⓘ By briefly pressing the [ ] button on the multifunction steering wheel you can continue to operate the multimedia system using the MBUX Voice Assistant (→ page 399).

Only one iPhone® at a time can be connected via Apple CarPlay® with the multimedia system.

Also for use of Apple CarPlay® with two phone mode, only one additional mobile phone can be connected using Bluetooth® with the multimedia system.

As access to the iPhone® is restricted by MBUX when an Apple CarPlay® session is active, not all MBUX functions (e.g. dialling from the address book) can be fully provided for the connected device. In this case use Apple CarPlay®.

The full range of functions for Apple CarPlay® is only available with an Internet connection.

The availability of Apple CarPlay® may vary according to the country.

The service provider is responsible for this application and the services and content connected to it.

Apple CarPlay® is a registered trademark of Apple Inc.

You can watch an animation on this topic via the following link:

Information on Apple CarPlay®

The Apple CarPlay® symbol in the status line switches within Apple CarPlay® to the last active display.

If route guidance is active on the multimedia system, it is closed when route guidance is started on the mobile phone.

Connecting an iPhone® via Apple CarPlay® (wired)

Requirements:

- The current version of your device's operating system is being used (see the manufacturer's operating instructions).

ⓘ For safety reasons, the first activation of Apple CarPlay® on the multimedia system must be carried out when the vehicle is stationary and the parking brake applied.

▶ Connect the iPhone® to a USB port on the multimedia system using a suitable cable (→ page 540).
When the application is connected for the first time, a message about data protection regulations appears.

▶ Select Accept & start if the application should be started.

or

▶ Open the device manager (→ page 495).

▶ Start Apple CarPlay® using the relevant symbol next to the device name.

ⓘ If applicable, a message about data protection regulations appears.

▶ If required confirm the use of Apple CarPlay® on your iPhone®.

Exiting Apple CarPlay®

▶ Select [⌂].

or

▶ Press the [⌂] button on the multifunction steering wheel (MBUX multimedia system).

ⓘ If Apple CarPlay® was not displayed in the foreground before disconnecting, the application starts in the background when reconnected. You can call up Apple CarPlay® using the Apple CarPlay® symbol in the status line.

Connecting an iPhone® via Apple CarPlay® (wireless)

Requirements

- The current version of your device's operating system is being used (see the manufacturer's operating instructions).
- Bluetooth® is activated on the device (see the manufacturer's operating instructions).
- The device is "visible" for other devices.

ⓘ For safety reasons, the first activation of Apple CarPlay® on the multimedia system must be carried out when the vehicle is stationary and the parking brake applied.

Multimedia system:

[⌂] ▸▸ Phone ▸▸ [⚙] ▸▸ Devices

▶ Connect the mobile phone using Bluetooth® (→ page 495).
When the application is connected for the first time, a message about data protection regulations appears.

▶ Select OK, start Apple CarPlay if the application should be started.

▶ If required confirm the use of Apple CarPlay® on your iPhone®.

ⓘ It is possible at any time to switch between connection via Bluetooth® or Apple CarPlay® (wireless) in the device list.

ⓘ If you have already connected a mobile phone via Bluetooth®, you can connect another iPhone® via Bluetooth® to use Apple CarPlay® via the device manager.

Exiting Apple CarPlay®

▶ Select [⌂].

or

▶ Press the [⌂] button on the Touch Control (MBUX multimedia system).

ⓘ If Apple CarPlay® was not displayed in the foreground before disconnecting, the application starts in the background when reconnected. You can call up Apple CarPlay® using the Apple CarPlay® symbol in the status line.

Calling up Apple CarPlay® sound settings

Multimedia system:

[⌂] ▸▸ Settings ▸▸ System ▸▸ Audio

▶ Select the sound settings.

Ending Apple CarPlay®

▶ Select the Apple CarPlay® symbol in the device manager (telephone, media) that is next to the device name of the iPhone®.

ⓘ Select the Apple CarPlay® symbol in the device manager in the telephone or media applications if Apple CarPlay® should be restarted.

ⓘ If Apple CarPlay® was not displayed in the foreground before disconnecting, the application starts in the background the next time it is started automatically. You can call up Apple CarPlay® using the relevant symbol in the status line.

Android Auto

Android Auto overview

⚠ **WARNING** Risk of distraction from information systems and communications equipment

If you operate information systems and communication devices integrated in the vehicle when driving, you could be distracted from the traffic situation. This could also cause you to lose control of the vehicle.

- ▶ Only operate this equipment when the traffic situation permits.
- ▶ If you cannot be sure of this, stop the vehicle whilst paying attention to road and traffic conditions and operate the equipment with the vehicle stationary.

You must observe the legal requirements for the country in which you are currently driving when operating the multimedia system.
Mobile phone functions can be used with Android Auto using the Android operating system on the multimedia system. They are operated using the touchscreen, Touch Control or voice control. You can activate the voice control system by pressing and holding the [ξ] button on the multifunction steering wheel.

ⓘ By briefly pressing the [ξ] button on the multifunction steering wheel you can continue to operate the multimedia system using the MBUX Voice Assistant (→ page 399).

Only one mobile phone at a time can be connected via Android Auto with the multimedia system.

Also for use of Android Auto with two phone mode, only one additional mobile phone can be connected using Bluetooth® with the multimedia system.

The full range of functions for Android Auto is only possible with an Internet connection.

The availability of Android Auto and Android Auto apps may vary according to the country.

The service provider is responsible for this application and the services and content connected to it.

You can watch an animation on this topic via the following link:

Information on Android Auto

The Android Auto symbol in the status line switches within Android Auto to the last active display.

If route guidance is active on the multimedia system, it is closed when route guidance is started on the mobile phone.

Connecting a mobile phone via Android Auto (wired)

Requirements:

- The mobile phone supports Android Auto from Android 5.0.

- The current version of the Android Auto app is installed on the mobile phone.
- In order to use the telephone functions, the mobile phone must be connected to the multimedia system via Bluetooth® (→ page 495).

  If there was no prior Internet connection, this is established with the use of the mobile phone with Android Auto.

ⓘ For safety reasons, the first activation of Android Auto on the multimedia system must be carried out when the vehicle is stationary with the parking brake.

▶ Connect the mobile phone to a USB port on the multimedia system using a suitable cable (→ page 540).
When the application is connected for the first time, a message about data protection regulations appears.

▶ Select Accept & start if the application should be started.

or

▶ Open the device manager (→ page 495).

▶ Start Android Auto using the relevant symbol next to the device name.

Exiting Android Auto

▶ Select [⌂].

or

▶ Press the [⌂] button on the Touch Control (MBUX multimedia system).

ⓘ If Android Auto was not displayed in the foreground before disconnecting, the application starts in the background when reconnected. You can call up Android Auto using the Android Auto symbol in the status line.

Connecting a mobile phone via Android Auto (wireless)

Requirements

- The current version of your device's operating system is being used (see the manufacturer's operating instructions).
- The device supports the Android Auto function (wireless).
- Bluetooth® is activated on the device (see the manufacturer's operating instructions).
- The device is "visible" for other devices.
- Bluetooth® is activated on the multimedia system (→ page 434)

ⓘ For safety reasons, the first activation of Android Auto on the multimedia system must be carried out when the vehicle is stationary with the parking brake.

ⓘ The Android Auto function (wireless) is not available in all countries.

Multimedia system:

→ [⌂] ▸▸ Phone ▸▸ [⚙] ▸▸ Devices

▶ Connect the mobile phone using Bluetooth® (→ page 495).

ⓘ Depending on the device configuration, the query whether Android Auto should be started may appear after connecting the mobile phone via Bluetooth®. In this case, the query must be answered with Yes.

▶ Select Start Android Auto.
When the application is connected for the first time, a message about data protection regulations appears.

▶ Select Accept & start.

ⓘ It is possible at any time to switch between connection via Bluetooth® or Android Auto (wireless) in the device list.

ⓘ If you have already connected a mobile phone via Bluetooth®, you can connect another mobile phone via Bluetooth® to use Android Auto via the device manager.

Exiting Android Auto

▶ Select [⌂].

or

▶ Press the [⌂] button on the Touch Control (MBUX multimedia system).

ⓘ If Android Auto was not displayed in the foreground before disconnecting, the application starts in the background when reconnected. You can call up Android Auto using the Android Auto symbol in the status line.

Calling up the Android Auto sound settings

Multimedia system:

→ [⌂] ▸▸ Settings ▸▸ System ▸▸ Audio

▶ Select the sound settings.

Ending Android Auto

▶ Select the Android Auto symbol in the device manager (telephone, media) that is next to the device name of the mobile phone.

ⓘ Select the Android Auto symbol in the device manager if Android Auto should be restarted.

ⓘ If Android Auto was not displayed in the foreground before disconnecting, the application starts in the background the next time it is started automatically. You can call up Android Auto using the Android Auto symbol in the status line.

Transferred vehicle data with Android Auto and Apple CarPlay®

Overview of transferred vehicle data

When using Smartphone Integration, certain vehicle data is transferred to the mobile phone. This enables you to get the best out of selected mobile phone services. Vehicle data is not directly accessible.

The following system information is transmitted:

- Software release of the multimedia system
- System ID (anonymised)

The transfer of this data is used to optimise communication between the vehicle and the mobile phone.

To do this, and to assign several vehicles to the mobile phone, a vehicle identifier is randomly generated.

This has no connection to the vehicle identification number (VIN) and is deleted when the multimedia system is reset (→ page 440).

The following driving status data is transmitted:

- Transmission position engaged
- Distinction between parked, standstill, rolling and driving
- Day/night mode of the driver display
- Drive type

The transfer of this data is used to alter how content is displayed to correspond to the driving situation.

The following position data is transmitted:

- Coordinates

- Speed
- Compass direction
- Acceleration direction

This data is used by the mobile phone to improve the accuracy of the navigation (e.g. for continuity in a tunnel).

Mercedes me calls

Making a call via the overhead control panel

ⓘ Mercedes me calls are not possible in every country. Find out at a Mercedes-Benz service centre if these functions are available in your country.

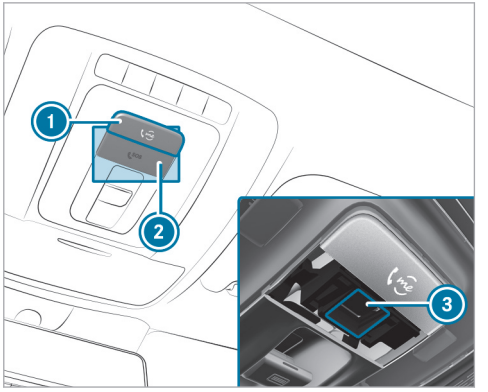

① me button for service or information calls
② SOS button cover
③ SOS button (emergency call system)

Making a Mercedes me call

▶ Press me button ①.

Making an emergency call

▶ To open the cover of SOS button ②, press it briefly.

▶ Press and hold SOS button ③ for at least one second.

If a Mercedes me call is active, an emergency call can still be triggered. This has priority over all other active calls.

Information about the Mercedes me call using the me button

A call to the Mercedes-Benz Customer Centre has been initiated via the me button in the overhead control panel or the multimedia system (→ page 514).

Using the voice dialogue system you access the desired service:

- Accident and Breakdown Management
- Mercedes-Benz Customer Centre for general information about the vehicle

You can find information on the following topics:

- Activation of Mercedes me connect

- Operating the vehicle
- Nearest Mercedes-Benz service centre
- Other products and services from Mercedes-Benz

Data is transferred during the connection to the Mercedes-Benz Customer Centre (→ page 517).

Calling the Mercedes-Benz Customer Centre using the multimedia system

Requirements

- Access to a GSM network is available.
- The contract partner's GSM network coverage is available in the respective region.
- The vehicle must be switched on so that vehicle data can be transferred automatically.

Multimedia system:

→ [⌂] » Phone » [☎]

▶ Call Mercedes me connect.
After confirmation, the multimedia system sends the required vehicle data. The data transfer is shown in the display.

Then you can select a service and be connected to a specialist at the Mercedes-Benz Customer Centre.

Calling the Mercedes-Benz Customer Centre after automatic accident or breakdown detection

Requirements:

- The vehicle has detected an accident or breakdown situation (→ page 300).
- The vehicle is stationary.
- The hazard warning lights are switched on.

ⓘ This function is not available in all countries.

The vehicle can detect accident or breakdown situations under certain circumstances.

Requirements for collision detection in the context of accident recovery:

- The vehicle is equipped with an anti-theft alarm system (ATA) (code 551).
- The vehicle is equipped with the interior protection (code 882).
- The vehicle is equipped with the Anti-Theft Protection Package (code P54).
- The collision detection service with theft notification has been activated on Mercedes me connect.

If a collision is detected when the tow-away protection is primed on a locked vehicle, you will receive a notification in the multimedia system when you switch the vehicle on.

The message informs you about the potentially affected area of the vehicle and the strength of the collision.

In the event an accident or breakdown is detected, the emergency guide shows safety notes in the multimedia system display. This may take a few seconds.

ⓘ The availability of collision detection depends on the vehicle.

After quitting the emergency guide display on the multimedia system, a prompt appears asking whether you would like to get support from the Mercedes-Benz Customer Centre.

▶ Select Call.
- After your agreement, or if the Mercedes me connect service "Accident and Break-

down Management" is active, the vehicle data is transferred automatically (→ page 519).

- The Mercedes-Benz Customer Centre takes your call and organises the breakdown and accident assistance.

You may be charged for these services.

ⓘ Depending on the severity of the accident, an automatic emergency call can be initiated. This has priority over all other active calls (→ page 524).

ⓘ In addition, if the Mercedes me connect service "Telediagnostics" is active, a similar prompt can appear after a delay in the event of a breakdown. If you are already in contact with the Mercedes-Benz Customer Centre or have already received support, this prompt can be ignored or declined.

ⓘ If you answer the prompt for support from the Mercedes-Benz Customer Centre with Call later, the message will be hidden and appear again later.
The prompt triggered by the Mercedes me connect service "Telediagnostics", can either be confirmed or declined. After being declined, this will not be shown again.

Arranging a service appointment via a Mercedes me call

If you have activated the maintenance management service, relevant vehicle data is transferred automatically to the Mercedes-Benz Customer Centre. You will then receive individual recommendations regarding the maintenance of your vehicle.

Regardless of whether you have consented to the maintenance management service, the multimedia system reminds you after a certain amount of time that a service is due. A prompt appears asking if you would like to make an appointment.

▶ **To arrange a service appointment:** select Call. After your consent, the vehicle data is transferred and the Mercedes-Benz customer centre takes your preferred appointment date. The information is then sent to your desired service outlet.

This will contact you to confirm the appointment and if necessary consult about the details.

ⓘ If you select Call later after the service message appears, the message is hidden and reappears at a later time.

Giving consent to data transfer during a Mercedes me call

Requirements

- There is an active Mercedes me call via the multimedia system or the me button in the overhead control panel (→ page 514).

ⓘ The prompt to confirm data transfer does not appear in all countries.

If the Accident and Breakdown Management services are not activated on Mercedes me, the Do you want to transfer your vehicle data and the vehicle's position to the Mercedes-Benz Customer Centre to improve the processing of your request? message is shown.

ⓘ The exact phrase may differ depending on the multimedia system installed.

▶ Select Yes.
- The relevant vehicle data is sent automatically (→ page 517).

or

▶ Select No and confirm.
- Only call control data is transmitted (→ page 517).

More information on Mercedes me: https://www.mercedes.me

Data transferred during a Mercedes me call

If you initiate a service call using Mercedes me, data is transferred to enable targeted advice and an efficient service.

The following requirements must be fulfilled for the transfer of the data:

- The vehicle is switched on.
- The required data transfer technology is supported by the mobile phone network provider.
- The quality of the mobile connection is sufficient.

Multi-stage transfer depends on the following factors:

- Reason for the initiation of the call
- The available mobile phone transmission technology
- The activated Mercedes me connect services
- The service selected in the voice control system

ⓘ A prompt for consent to the data transfer only occurs if the corresponding Mercedes me connect service is not activated.

ⓘ The scope of the data transmitted depends on the vehicle model and vehicle equipment. For technical reasons, not all data is available at all times.

Data transfer if Mercedes me connect services are not activated

If no Mercedes me connect services are activated and the data protection prompt has been confirmed the following data is transmitted:

- Vehicle identification number
- Time of the call
- Reason for the initiation of the call
- Confirmation of the data protection prompt
- Country indicator of the vehicle
- Set language for the multimedia system
- Telephone number of the communication platform installed in the vehicle

If a call is made for a service appointment via the service reminder, the following data is also transmitted:

- Current mileage and maintenance data

If a call is made after automatic accident or breakdown detection using the multimedia system, the following data is also transmitted:

- Current mileage and maintenance data
- Current vehicle location

If Accident and Breakdown Management is called via the voice control system and no service has been activated, but the data protection query has been confirmed, the following data can also be called up from the vehicle by the Mercedes-Benz Customer Centre:

- Current vehicle location

If the data protection prompt has been rejected, the following data is transmitted to enable targeted advice and an efficient service:

- Reason for the initiation of the call
- Rejection of the data protection prompt
- Country indicator of the vehicle
- Set language for the multimedia system
- Telephone number of the communication platform installed in the vehicle

Data transfer if Mercedes me connect services are activated

Only if the respective service is activated will additional incident-specific data be transmitted in the second stage to enable an optimal service.

An overview of the data transferred is contained in the data protection information for the Mercedes me connect services. You can find these in your Mercedes me user account.

Data processing

The data transmitted within the scope of the call is deleted from the processing system after the call is finished, in so far as this data is not being used for other activated Mercedes me connect services.

The incident-specific data is processed and stored in the Mercedes-Benz Customer Centre and, if required to process the incident, forwarded to the service partner authorised by the Mercedes-Benz Customer Centre. Take note of the data protection information on the Mercedes me Internet page https://www.mercedes.me or in the recorded message immediately after calling the Mercedes-Benz Customer Centre.

ⓘ The recorded message is not available in every country.

Mercedes me connect

Information on Mercedes me connect

ⓘ Mercedes me connect or individual Mercedes me connect services are not available in every country. Find out at a Mercedes-Benz service centre if these functions are available in your country.

Mercedes me connect consists of multiple services.

You can use the following services via the multimedia system and the overhead control panel, for example:

- Accident and Breakdown Management (me button or situation-dependent display in the multimedia system)
- Mercedes-Benz Emergency Call System (automatic emergency call and SOS button)

The Mercedes me connect Accident and Breakdown Management and the Mercedes-Benz emergency call centre are available to you around the clock.

The me button and the SOS button can be found on the vehicle's overhead control panel (→ page 514).

You can also call the Mercedes-Benz Customer Centre using the multimedia system (→ page 515).

Please note that Mercedes me connect is a Mercedes-Benz service. In emergencies, first call the national emergency services using the standard national emergency service telephone numbers. In emergencies, you can also use the

Mercedes-Benz emergency call system (→ page 59).

Please note the Mercedes me connect terms of use and the data protection information for Mercedes me connect. You can find these in your Mercedes me user account.

Information on Mercedes me connect Accident and Breakdown Management

ⓘ Accident and Breakdown Management is not available in every country. Contact a Mercedes-Benz service centre to find out whether this function is available in your country.

The Accident and Breakdown Management can include the following functions:

- Supplement to the Mercedes-Benz emergency call system (→ page 59)

  If necessary, the contact person at the Mercedes-Benz emergency call centre forwards the call to Mercedes me connect Accident and Breakdown Management. Forwarding the call is however not possible in all countries.

- Breakdown assistance by a technician on location and/or the towing away of the vehicle to the nearest Mercedes-Benz service centre

  You may be charged for these services.

- Addition to the emergency guide after automatic accident or breakdown detection (→ page 515)

  In the event of a breakdown or accident, further vehicle data is sent which enables optimal support by the Mercedes-Benz Customer Centre and the authorised service partner or breakdown assistance.

- Addition to the Mercedes me connect service Telediagnostics

  With the Telediagnostics function, specific wear and failure reports are recorded by the service provider, in so far as these can be clearly interpreted and are available through the monitoring of components that are subject to diagnostics.

  If your vehicle detects a breakdown or threat of a breakdown, you may be prompted via the multimedia system to contact the Mercedes-Benz Customer Centre for further help. This prompt in the multimedia system only appears when the vehicle is stationary.

ⓘ These services are subject to technical restrictions such as the mobile phone coverage, mobile network quality and the ability of the processing systems to interpret the transferred data. In some circumstances, this can result in delays or the failure of the information to appear in the multimedia system.

Please note that the service and breakdown call is a Mercedes-Benz service. In emergencies, be sure to contact the usual national emergency number first or use the Mercedes-Benz emergency call system (→ page 521).

More information about Mercedes me connect services can be obtained in the Mercedes me Portal: https://me.secure.mercedes-benz.com

Data transferred during Mercedes me connect call services

The data transferred during a Mercedes me connect call depends on:

- The reason for initiation of the call

- The service that is selected in the voice control system
- The activated Mercedes me connect services

You can find out which data is transferred when using the services in the currently valid Mercedes me connect terms of use and the data protection information for Mercedes me connect. You can find these in your Mercedes me user account.

Mercedes me Apps

Information about Mercedes me

With a Mercedes me user account you have access to Mercedes-Benz services and offers.

Availability is dependent both on the country and equipment.

You can obtain further information at a Mercedes-Benz service centre or in the Mercedes me Portal: https://me.secure.mercedes-benz.com

Further information about on-demand features via Mercedes me can be found in the "General notes" section (→ page 79).

ⓘ Make sure you always keep the Mercedes me Apps updated.

Calling up the Mercedes me user account

Multimedia system:

→ [⌂] ▸▸ Apps ▸▸ Mercedes me

Vehicle is linked to user account and Mercedes me is available

▶ Select Mercedes me ID.
Information about the linked user account appears.

Your vehicle is not linked to the user account

ⓘ If you do not yet have a Mercedes me user account, you can create one at: https://www.mercedes.me or in the Mercedes me App. A valid email address or phone number is required for this.

▶ Select [⌂].

▶ Select Apps.

▶ Select Mercedes me.

▶ Follow the instructions on the display to link the user account with the vehicle.

ⓘ If the Mercedes me App is available on a mobile phone, the vehicle connection can be accomplished using the QR code shown.

Calling up the Mercedes me services

Requirements:

- The vehicle is connected with the user account.

Multimedia system:

→ [⌂] ▸▸ Apps ▸▸ Mercedes me

▶ Select My services.
The Mercedes me connect services for which you have a valid licence are displayed in alphabetical order.

Ordering or extending Mercedes me connect services

To order or renew Mercedes me connect services, use the Store.

▶ Select [⌂].

▶ Select Store.

Deleting a connection between a user account and the vehicle

Requirements
- The user profile of the user account that was first linked to the vehicle is selected.
- The user profile is synchronised (→ page 423).
- A Mercedes me PIN has been set.

Multimedia system:
→ ⌂ ▸▸ Apps ▸▸ Mercedes me

▶ Select Mercedes me ID.

▶ Select Delete vehicle connection.

ⓘ Only the user, whose user account was first connected with the vehicle can delete the connection between all user accounts and the vehicle.

Selecting apps

Requirements:
- Depending on the app, the general terms and conditions are confirmed.

Multimedia system:
→ ⌂ ▸▸ Apps

▶ Select an app.

The following apps are available, for example:
- Weather
- Browser
- Additional apps, which are purchased or installed subsequently

ⓘ You can also access both of the first two apps via the quick access at Apps.

ⓘ The available features are country-dependent. Licence fees may be applicable.

The following functions are available for apps, for example:
- Search function
- Filter function, for displaying search results at the current vehicle position or at the destination
- Display of detailed information
- Read-aloud function
- Setting functions

Mercedes-Benz emergency call system

Information on available emergency call systems

Two types of emergency call system are available to you in the vehicle:
- Mercedes-Benz emergency call system
- 112 emergency call system (EU eCall)

The Mercedes-Benz Emergency Call System is not available in all countries. You can find more information on the regional availability of the Mercedes-Benz emergency call system at: https://www.mercedes-benz-mobile.com/extra/ecall/

The following applies for both emergency call systems:
- The transfer of specific data is required for the intended function of both emergency call systems. This will be explained in the "Data transfer" section (→ page 525).
- Both emergency call systems are included as standard equipment in your vehicle and are activated at the factory.

- The use of both emergency call systems is exempt from charges.
- Both emergency call systems only function in areas in which the mobile phone network providers offer mobile phone coverage.

For both systems, insufficient network coverage from the mobile phone network providers can result in an emergency call not being transmitted.

Differences between the Mercedes-Benz emergency call system and the 112 emergency call system (EU eCall)

Mercedes-Benz emergency call system	112 emergency call system (EU eCall)
• The Mercedes-Benz emergency call system is permanently logged in to the mobile phone network. • Automatic and manual Mercedes-Benz emergency calls are transmitted to a Mercedes-Benz emergency call centre. In the event that the emergency call centre of the Mercedes-Benz emergency call system cannot be reached (e.g. due to a lack of network coverage), the 112 emergency call is carried out automatically.	• If you decide on the 112 emergency call system (EU eCall) only, then the system only logs in to the mobile phone network after the triggering of a manual or automatic emergency call. • The 112 emergency call system (EU eCall) transmits automatic and manual emergency calls directly to public coordination centres.

ⓘ The 112 emergency call system (EU eCall) in your vehicle meets the delegated regulation EU 2017/79. Proper and full functionality of the 112 emergency call system (EU eCall) depends on circumstances beyond the influence of Mercedes-Benz AG. This includes mobile network coverage and the technical infrastructure of the public reception centres in the respective countries.

ⓘ Please observe that in the event of a repair genuine Mercedes-Benz batteries must be used which have been certified pursuant to the delegated regulation EU 2017/79 (Appendix I). Other manufacturers are also permitted provided their batteries are certified according to the delegated regulation EU 2017/79.

There is the option of deactivating the Mercedes-Benz emergency call system and using only the

112 emergency call system (EU eCall). Contact address for carrying out deactivation of the Mercedes-Benz emergency call system are the local dealers.

Mercedes-Benz recommends the activation of the Mercedes-Benz emergency call system for the following reasons:

- In emergency situations when abroad, you can also get support in a language you speak.
- Several transmission technologies are used to accelerate the transfer of the accident data and improve reliability of the transmission.
- The Mercedes-Benz emergency call system is permanently logged in to the mobile phone network, which ensures faster placement of the emergency call and faster transfer of the accident data.

  Measures for rescue, recovery or towing away can then be initiated in quickly.
- With a Mercedes-Benz emergency call, the accident data is only transferred to the public coordination centre with the approval of the customer.

  In the event of an automatically triggered emergency call in which there is no voice contact, the accident data is transmitted immediately to the public emergency call centre.
- If the Mercedes-Benz emergency call centre is not available, the 112 emergency call is carried out automatically.

Overview of emergency call systems

Both the Mercedes-Benz emergency call system as well as the 112 emergency call system (EU eCall) can help to reduce the time between an accident and the arrival of emergency services at the site of the accident. They help locate an accident site in places that are difficult to access.

Both emergency call systems can initiate an emergency call automatically (→ page 524) or manually (→ page 524).

Only make emergency calls if you or others are in need of rescue. Do not make an emergency call in the event of a breakdown or a similar situation.

Indicators in the displays

The following messages appear on the central display or the media display of both emergency call systems:

- SOS NOT READY: the vehicle is not switched on or the emergency call system is malfunctioning. This does not necessarily indicate complete failure of the emergency call system. Emergency calls can still be transmitted.

  The display only refers to the vehicle and does not take account of the availability of mobile phone networks and the Mercedes-Benz emergency call centre.

  The functional readiness of the emergency call system on the vehicle can be seen when the SOS NOT READY display disappears once the vehicle is switched on.
- SOS: the icon appears in the display during an active emergency call.

ⓘ If there is a malfunction of the emergency call system, the loudspeakers, microphone, airbag or the SOS button, for example, are faulty.

You can recognise a fault in the emergency call system by the following displays:

- A corresponding message will also appear in the driver's display.
- The SOS button lights up red continuously.

Triggering an automatic emergency call

Requirements

- The vehicle is switched on.
- The starter battery is sufficiently charged.

Both the Mercedes-Benz emergency call system as well as the 112 emergency call system (EU eCall) automatically initiate an emergency call:

- After activation of the restraint systems such as airbags or seat belt tensioners after an accident

The emergency call has been made:

- A voice connection is established with the emergency call centre.
- A message with accident data is transmitted to the emergency call centre.

The SOS button in the overhead control panel flashes until the emergency call is finished.

If no connection can be made to the public emergency services, a corresponding message appears in the display.

▶ Dial the emergency number 112 or the appropriate local emergency call number on your mobile phone.

If an emergency call has been initiated:

- Remain in the vehicle if the road and traffic conditions permit you to do so until a voice connection is established with the emergency call centre.
- On the basis of the call, the emergency call centre decides whether it is necessary to call rescue teams and/or the police to the accident site.
- If no vehicle occupant answers, an ambulance is sent to the vehicle immediately.

Triggering a manual emergency call

▶ **To use the SOS button in the overhead control panel:** press the SOS button at least one second long (→ page 514).

or

▶ **To use voice control:** use the voice commands of the MBUX voice assistant (→ page 403).

The emergency call has been made:

- A voice connection is established with an emergency call centre.
- Remain in the vehicle if the road and traffic conditions permit you to do so until a voice connection is established with the emergency call centre.
- On the basis of the call, the emergency call centre decides whether it is necessary to call rescue teams and the police to the accident site.
- A message with accident data is transmitted to the emergency call centre.

If no connection can be made to the public emergency services, a corresponding message appears in the display.

▶ Dial the emergency number 112 or the appropriate local emergency call number on your mobile phone.

Emergency call system data transfer

For both the Mercedes-Benz emergency call system as well as the 112 emergency call system (EU eCall) data is transferred to the Mercedes-Benz emergency call centre or the public emergency services call centre.

Depending on the emergency call system (→ page 521) activated different data is transmitted to the appropriate emergency call centre.

Transmitted data according to activated emergency call system:

Mercedes-Benz emergency call	112 emergency call
• Position data of the vehicle • Position data on the route (a few 100 m before the incident) • Direction of travel • Vehicle identification number • Drive type of the vehicle (e.g. petrol, diesel, CNG, LPG, electric or hydrogen) • Number of people detected in the vehicle • Whether the emergency call was initiated manually or automatically • Time of the accident • Language setting on the multimedia system • Whether Mercedes me connect is available or not This is a requirement for the option of forwarding the call to the Mercedes-Benz Customer Centre if necessary.	• Position data of the vehicle • Position data on the route (a few 100 m before the incident) • Direction of travel • Vehicle identification number • Drive type of the vehicle (e.g. petrol, diesel, CNG, LPG, electric or hydrogen) • Number of people detected in the vehicle • Whether the emergency call was initiated manually or automatically • Time of the accident

ⓘ If only the 112 emergency call system (EU eCall) is activated in the vehicle, the accident data is transmitted directly to the public emergency call centre.

For accident clarification purposes, the following measures can be taken up to an hour after the emergency call has been initiated:

- The current vehicle position can be determined.
- A voice connection to the vehicle occupants can be established.
- Emergency call data can be called up.

ⓘ For Russia: various functions, e.g. receiving traffic information, cannot be performed for up to two hours after sending an emergency call.

Self-diagnosis function of the emergency call system

Your vehicle checks the functionality of the emergency call system every time the vehicle is switched on. During this time, the SOS button lights up red continuously for five seconds. In the event of a system failure, you will be informed via a text message on the driver's display and the red SOS NOT READY indicator on the central display or media display.

Please, make sure, that during 30 seconds after switching vehicle ON the red indicator SOS NOT READY in the upper right corner of display is switched OFF, this means the emergency call system passed diagnostics successfully.

Starting/ending ERA-GLONASS test mode

Requirements

- The starter battery is sufficiently charged.
- The vehicle is switched on.
- The vehicle has been stationary for at least one minute.

ⓘ The test mode is currently available in the following countries, for example:

- Russia
- Belarus
- Kazakhstan
- Armenia
- Kyrgyzstan

▶ **To start the test mode:** press and hold the ☎ button on the multifunction steering wheel for at least five seconds.
The test mode is started and automatically ends after the language test has been performed.

▶ **To stop manual test mode:** switch off the vehicle.
The test mode is ended.

Information on data processing

Processing of personal data via the Mercedes-Benz emergency call system

All processing of personal data via the Mercedes-Benz emergency call system corresponds with the specifications in the EU Regulation 2016/679 "on the protection of natural entities with regard to the processing of personal data (GDPR)".

The data is solely used by the Mercedes-Benz emergency call system for rescue and recovery in the event of an accident.

The owner of a vehicle, that is equipped with a Mercedes-Benz emergency call system in addition to the 112 emergency call system (EU eCall), has

the right to use the 112 emergency call system instead of the Mercedes-Benz emergency call system.

Contact address for carrying out deactivation of the Mercedes-Benz emergency call system are the local dealers.

Processing of personal data via the 112 emergency call system (EU eCall)

All processing of personal data via the 112 emergency call system (EU eCall) corresponds with the specifications in the EU Regulation 2016/679 "on the protection of natural entities with regard to the processing of personal data (GDPR)" and is based particularly on the necessity of upholding the vital interests of the affected person in accordance with Article 6, Clause 1, Letter d of the GDPR.

The processing of this type of data is strictly limited to the purpose of operating the emergency calls to the standard European emergency call number 112.

Data recipient

The recipients of data that is processed by the 112 emergency call system (EU eCall) are the relevant emergency call inquiry terminals. These are configured by the appropriate authorities of the respective country in which they are located to first accept and subsequently process emergency calls to the standard European emergency call number 112.

Arrangements for data processing

Both emergency call systems are designed so that the following requirements are fulfilled:

- The data contained in the system memory is not accessible outside the system prior to the initiation of an emergency call.
- Both emergency call systems cannot be traced and there is no continuous tracking in normal operation.
- The data in the system's internal memory is automatically and continuously deleted.
- The location data of the vehicle is continuously overwritten in the system's internal memory, so that no more than the last three current locations required for the normal function of the system are available.
- The record of the activity data of both emergency call systems is only kept for as long as is required to fulfil the purpose of handling the emergency call, and under no circumstances for more than 13 hours after the time that an emergency call is initiated.

Rights of persons affected by the data processing

The person affected by the data processing (the vehicle owner) has the right to access the data and if applicable can demand the correction, deletion or barring of data that affects him or her and that the processing of which does not correspond with the GDPR regulations. Each correction, deletion or barring carried out according to this regulation must be shared with the third party to which the data has been transmitted, provided this does not prove to be infeasible and does not incur disproportionate expenditure.

The person affected by the data processing has the right to complain to the appropriate data protection authority should they be of the opinion that their rights have been infringed by the processing of their personal data.

Responsible contact point for the processing of access rights: Konzernbeauftragter für den Datenschutz, Mercedes-Benz Group AG, HPC E600, D-70546 Stuttgart, Germany

Online and Internet functions

Internet connection

Information on connecting to the Internet

WARNING Risk of distraction from information systems and communications equipment

If you operate information systems and communication devices integrated in the vehicle when driving, you could be distracted from the traffic situation. This could also cause you to lose control of the vehicle.

- Only operate this equipment when the traffic situation permits.
- If you cannot be sure of this, stop the vehicle whilst paying attention to road and traffic conditions and operate the equipment with the vehicle stationary.

You must observe the legal requirements for the country in which you are currently driving when operating the multimedia system.

WARNING Risk of accident from operating mobile communication equipment while the vehicle is in motion

Mobile communication devices distract the driver from the traffic situation. This can also cause the driver to lose control of the vehicle.

- As a driver, only operate mobile communication devices when the vehicle is stationary.
- As a vehicle occupant, use mobile communication devices only in the designated area, e.g. in the rear passenger compartment.

You must observe the legal requirements for the country in which you are currently driving when operating mobile communication equipment in the vehicle.

Depending on the vehicle's equipment and availability in the country, you can establish an Internet connection in the following ways:

- **Vehicles with a communication module:**
  - Using the communication module including data roaming (→ page 529)
  - Using Bluetooth® or Wi-Fi with a data-enabled mobile phone
- **Vehicles without a communication module:**
  - Using Bluetooth® with a data-enabled mobile phone
  - Using Wi-Fi with a data-enabled mobile phone

The Internet functions can only be used to a limited degree whilst driving.

Setting up an Internet connection using the communication module

Requirements

- The vehicle is equipped with a permanently installed communication module.
- A Mercedes me user account is available.
- The vehicle is linked to a Mercedes me user account.
- The Entertainment Package is active.
- The Comfort Data Volume service is active.

Multimedia system:

→ [⌂] ▸▸ Settings ▸▸ System ▸▸ Internet and Bluetooth ▸▸ Manage Internet access

▶ Select Acquired data package.

For most Mercedes me connect services, data volume is available when purchasing the services.

Additional data volume is required to use some functions, e.g. web browser or Wi-Fi hotspot.

If the data volume limit is reached, the availability of Mercedes me connect services is limited.

Depending on the vehicle equipment, you can purchase a data package directly from a mobile phone network provider via the Mercedes me Store. To be able to use the data package, you conclude a separate contract with a mobile phone network provider via the Mercedes me Store, which can be terminated at any time and for which there are no costs. This contract is a prerequisite for using the services from the previously purchased package. The availability of this option is dependent on the country.

If the data package option is not available or can be upgraded, you can purchase data volume directly from the mobile phone network provider for a fee.

ⓘ Visit a Mercedes-Benz service centre to find out whether it is possible to purchase data volume in your country **directly from a mobile phone network provider**.

ⓘ Alternatively, and if available, you can utilise the tethering function of a mobile phone via Wi-Fi or Bluetooth® to use the web browser or Wi-Fi hotspot.

ⓘ With external Wi-Fi hotspots, which are encrypted via TKIP, online software updates cannot be carried out via the external Wi-Fi hotspot.

Disconnecting the automatic Internet connection via communication module

Requirements:

- Wi-Fi or Bluetooth® tethering are available in the vehicle.

Multimedia system:

→ [⌂] ▸▸ Settings ▸▸ System ▸▸ Internet and Bluetooth ▸▸ Manage Internet access

▶ Select the [•••] settings in the line of Acquired data package.

▶ **To disconnect the automatic connection:** select the Delete entry option.

ⓘ The communication module is removed from the list of known hotspots, but can be reconnected manually at any time (→ page 529).

The Delete entry option permits the use of purchased data volume to be limited. The system is

prevented from automatically establishing a connection to the communication module after this option has been activated.

Setting up an Internet connection via Wi-Fi

Requirements:

- The Wi-Fi function is activated on the multimedia system (→ page 435).
- The Wi-Fi hotspot function is activated on the mobile phone (see the manufacturer's operating instructions).
- Internet access via Wi-Fi is activated (see the manufacturer's operating instructions).

Multimedia system:

→ [⌂] ▸▸ Settings ▸▸ System ▸▸ Internet and Bluetooth ▸▸ Manage Internet access

ⓘ This function is country-dependent.

The mobile phone is listed in the Internet device manager

▶ Select the mobile phone with the [ᯤ] Wi-Fi symbol.

The mobile phone is not listed in the Internet device manager

▶ Select Search for access.

▶ Select the mobile phone with the [ᯤ] Wi-Fi symbol.
It may take a few seconds until the device is found by the Wi-Fi search.

▶ Log in to the Wi-Fi network (→ page 435).

The Internet connection via Wi-Fi is restricted or does not function in the following cases:

- The mobile phone is switched off
- Mobile data use is deactivated on the mobile phone
- The Wi-Fi function is deactivated on the multimedia system
- The Wi-Fi function is deactivated on the mobile phone
- Internet access via Wi-Fi is deactivated on the mobile phone

Setting up an internet connection via Bluetooth®

Requirements:

- The mobile phone supports the Bluetooth® profile PAN (Personal Area Network).
- The mobile phone is connected to the multimedia system via Bluetooth® (→ page 495).
- Internet access via Bluetooth® is activated (see the manufacturer's operating instructions).

Multimedia system:

→ [⌂] ▸▸ Settings ▸▸ System ▸▸ Internet and Bluetooth ▸▸ Manage Internet access

ⓘ This function is country-dependent.

The mobile phone is listed in the Internet device manager

▶ Select the mobile phone with the [ᛒ] Bluetooth® symbol.

The mobile phone is not listed in the Internet device manager

▶ Select Search for access.
In the list displayed, all mobile phones already known to the multimedia system are shown. New devices can be set up using the phone application.

▶ Connect the mobile phone using Bluetooth® (→ page 495).

ⓘ If a new mobile phone is connected using Bluetooth®, this is also used for the telephone application.

The Internet connection via Bluetooth® is restricted or does not function in the following cases:

- The mobile phone is switched off
- The mobile phone network coverage is insufficient
- Mobile data use is deactivated on the mobile phone
- The Bluetooth® function on the multimedia system is switched off and the mobile phone is to be connected via Bluetooth®
- The Bluetooth® function is switched off on the mobile phone and the mobile phone is to be connected via Bluetooth®
- Neither the mobile phone network nor the mobile phone allow simultaneous use of a telephone and an Internet connection
- The mobile phone has not been enabled for Internet access via Bluetooth®

Cancelling Internet access permission for a mobile phone

Multimedia system:

→ [⌂] ▸▸ Settings ▸▸ System ▸▸ Internet and Bluetooth ▸▸ Manage Internet access

▶ Select options [•••] next to the name of the mobile phone.

▶ Select Delete configuration.

▶ Select Yes.

Establishing an Internet connection

Multimedia system:

→ [⌂] ▸▸ Apps

▶ For example, select [🌐] Browser.

If you select a function that requires an Internet connection and the system is currently offline, a menu opens with a selection of possible Internet accesses as well as all tethering devices that are within range.

▶ Select an Internet access from the list.
The Internet connection is established.

ⓘ The list of possible Internet connections can also be displayed using the extended status line.

ⓘ Depending on the vehicle equipment and country availability, you can establish an Internet connection via the communication module or connected mobile phones.

ⓘ The availability of the web browser depends on the country.

Connection status

Connection status overview

Depending on the connection status, the following symbols can appear on the media display in the status line:

- : a WLAN device is selected as Internet access.
- : a Bluetooth® device is selected as Internet access.
- Mobile communications standard (e.g. 4G + double arrow symbol): the communication module is selected as the hotspot.

Displaying the connection status

Multimedia system:

▶ Briefly press the status line.
The extended status line is displayed.

▶ Briefly press the Internet symbol in the symbol overview.
The current connection status is displayed.

Notes on displaying the connection status

- When connecting via Wi-Fi, the connection status and device name are displayed.
- When connecting via a Bluetooth® device, the connection status, device name, and network type are displayed.
- In the case of a connection via the communication module the following status information can be shown:
  - Type of network
  - Status (online, offline, data volumes available or used, limited service)
- For vehicles with a communication module, the connection data of non-user paid services can be displayed via Mercedes me connect.

Web browsers

Calling up a web page

WARNING Risk of distraction from information systems and communications equipment

If you operate information systems and communication devices integrated in the vehicle when driving, you could be distracted from the traffic situation. This could also cause you to lose control of the vehicle.

▶ Only operate this equipment when the traffic situation permits.

▶ If you cannot be sure of this, stop the vehicle whilst paying attention to road and traffic conditions and operate the equipment with the vehicle stationary.

You must observe the legal requirements for the country in which you are currently driving when operating the multimedia system.

Multimedia system:

→ [⌂] ▸▸ Apps ▸▸ [🌐] Browser

Calling up a new web page

▶ Select Search.

▶ Entering a web address.

▶ Select OK.

ⓘ The function is country-dependent.

ⓘ No web pages can be displayed on the multimedia system while driving.

Calling up a website from the browser history

▶ **To call up the previous page from the history:** select [<].

Web browser overview

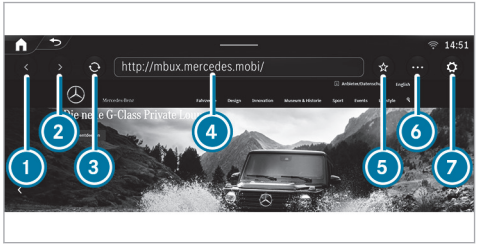

1. Previous website
2. Next website
3. Update
4. URL
5. Adds/removes bookmarks
6. Options
7. Settings

ⓘ Under [•••] you have the following options:

- Tabs
- Bookmarks & history
- Reading mode
- Share link
- Share content
- Request mobile website

Calling up web browser options

Multimedia system:

→ [⌂] ▸▸ Apps ▸▸ [🌐] Browser ▸▸ [•••] ▸▸ Bookmarks & history

The following functions are available:

- Bookmarks
- Browsing history
- Entered URLs

▶ Select an option.

▶ Change the settings.

Calling up the web browser settings

Multimedia system:

→ [⌂] ▸▸ Apps ▸▸ [🌐] Browser ▸▸ [⚙] ▸▸ Settings

The following functions are available:

- Block popups

- Enable cookies
- Enable Javascript

▶ Switch a function on [toggle] or off [toggle].

Deleting browser data

Multimedia system:

→ [home] ▸▸ Apps ▸▸ [globe] Browser ▸▸ [gear] ▸▸ Browser data

The following specific browser data can be deleted:

- Cache
- Cookies
- Form data

▶ Select one of the options shown.

Managing bookmarks

Multimedia system:

→ [home] ▸▸ Apps ▸▸ [globe] Browser ▸▸ [•••]

▶ Select Bookmarks & history.
▶ Select [•••] after the bookmark.
A menu with options opens.

The following options are available:

- Delete entry
- Delete all
- Edit
- Share

▶ Select one of the options shown.

Managing tabs

Multimedia system:

→ [home] ▸▸ Apps ▸▸ [globe] Browser ▸▸ [•••] ▸▸ Tabs

Opening a new tab

▶ Select New tab.

Changing tab

▶ Select the icon for the desired tab.

Closing a tab

▶ Press and hold the icon of the tab to be closed until a menu appears.
▶ Select Close.
The tab is closed.

Private mode

▶ Switch private mode on [toggle] or off [toggle].
If the private mode is switched on, an icon appears in the input line of the web browser.

ⓘ In private mode, neither the history nor cookies are saved.
Bookmarks can also be created in private mode.

Sharing URLs from the web browser

Requirements:

- To share via QR code: an app for scanning the QR code is installed on the mobile device.

Multimedia system:

→ [home] ▸▸ Apps ▸▸ [globe] Browser ▸▸ [•••]

Sharing URLs via QR code

▶ Select Share link.
A QR code appears.
▶ Scan the displayed QR code with a mobile device.

Sharing URLs with another display

▶ Select Share content.

▶ In the menu drag and drop a display to another display.
The displayed web page opens on the other display.

ⓘ More information on sharing display content:

Setting the web browser in the background

Multimedia system:

→ [⌂] ▸▸ Apps ▸▸ [🌐] Browser

▶ Press [⌂].
Audio playback continues.

TuneIn Radio

Calling up TuneIn Radio

Requirements:

- There is a user account at https://www.mercedes.me.
- The vehicle is linked to the Mercedes me user account.
- The TuneIn radio service is activated.
- The data volume is available.
  Depending on the country, data volume may need to be purchased.
- A fast Internet connection for data transmission free of interference.

ⓘ The functions and services are country-dependent. For more information, consult a Mercedes-Benz service centre.

Multimedia system:

→ [⌂] ▸▸ [♪] Radio

▶ Select TuneIn Radio.
The TuneIn Radio menu appears. The last station set starts playing.

ⓘ The connection quality depends on the local mobile phone reception.

Overview of TuneIn Radio

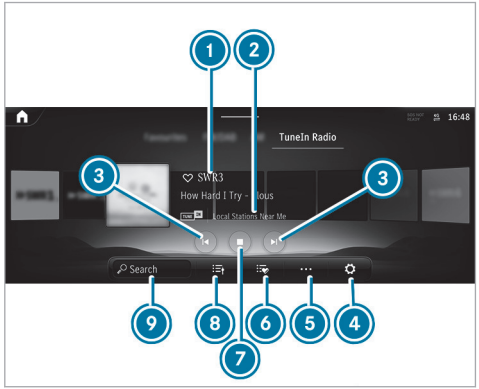

1. Internet Radio provider
2. Additional information on the currently selected station
3. Previous or next station
4. Settings
5. Additional options
6. Favourites

⑦ Controls playback
⑧ Station list
⑨ Search

Selecting and connecting to TuneIn radio stations

Multimedia system:

→ [⌂] ▸▸ [i] Radio ▸▸ TuneIn Radio

▶ Select [≡(•)].
▶ Select a category.
▶ Select a station.
The connection is established automatically.

or

▶ Select the search field.
▶ Enter a station name.

ⓘ A relatively large volume of data can be transmitted when using Internet Radio.

Saving/deleting a TuneIn radio station as a favourite

Multimedia system:

→ [⌂] ▸▸ [i] Radio ▸▸ TuneIn Radio

Saving favourites

▶ Select a station.
▶ Press the symbol next to the station name.

Deleting favourites

▶ Select a station.
▶ Press the symbol next to the station name.

Setting Internet Radio options

Multimedia system:

→ [⌂] ▸▸ [i] Radio ▸▸ TuneIn Radio ▸▸ [⚙] ▸▸ TuneIn

The following options are available:

- Select Stream: select the stream quality
- Login to TuneIn Account: log in to your TuneIn user account
- Log Out of Account: log out of your TuneIn user account

▶ Select an option.

Media

Information about media mode

Information about supported formats and data storage media

⚠ **WARNING** Risk of distraction when handling data storage media

If you handle a data storage medium while driving, your attention is diverted from the traffic conditions. This could also cause you to lose control of the vehicle.

▶ Only handle a data storage medium when the vehicle is stationary.

Supported formats and data storage media:

Permissible file systems	FAT32, exFAT, NTFS
Permissible data storage media	USB devices, iPod®/iPhone®, MTP devices, Bluetooth® audio devices
Supported audio formats	MP3, WMA, AAC, WAV, FLAC, ALAC
Supported video formats	MPEG, AVI, MKV, MP4, M4V, WMV

ⓘ Observe the following notes:

- The multimedia system supports a total of up to 50,000 files.
- Data storage media up to 2 TB are supported (32-bit address space).
- Due to the large variety of available music and video files regarding encoders, sampling frequency and data transfer rates, playback cannot be guaranteed.
- Due to the wide range of USB devices available on the market, playback cannot be guaranteed for all USB devices.
- Videos up to FullHD (1920x1080) are supported.
- Copy-protected music and video files or DRM (Digital Rights Management) encrypted files cannot be played back.
- MP3 players must support Media Transfer Protocol (MTP).

Information on copyright protection and trademarks

Audio files which you create yourself (e.g. copies of data storage media you make yourself) are generally subject to copyright protection. In many countries, reproductions are not permitted without the prior consent of the copyright holder, even for private use. Make sure that you know about the applicable copyright regulations and that you comply with these.

Dolby ATMOS

Manufactured under licence from Dolby Laboratories. Dolby and the double-D symbol are registered trademarks of Dolby Laboratories Licensing Corporation. Confidential unpublished works. Copyright 2020-2022 Dolby Laboratories. All Rights Reserved.

Manufactured under licence from Dolby Laboratories. Dolby, Dolby Audio and the double-D symbol are trademarks of Dolby Laboratories.

For DTS Patents, see https://patents.dts.com. Manufactured under licence from DTS Licensing Limited. DTS, the Symbol, & DTS and the Symbol together are registered trademarks, and DTS Tru-Volume is a trademark of DTS, Inc.©. DTS, Inc. All Rights Reserved.

DTS® Connected Radio™

For DTS Patents, see http://patents.dts.com. Manufactured under licence from DTS Licensing Limited. DTS, DTS Connected Radio, and the DTS logo are registered trademarks or trademarks of DTS, Inc. in the United States and other countries. © 2020 DTS, Inc. ALL RIGHTS RESERVED. Lyrics licensed and provided by Lyric Find™. Content licensed and sourced from Radioplayer™.

Gracenote, the Gracenote logo and logotype, "Powered by Gracenote", MusicID and Playlist Plus are either registered trademarks or trademarks of Gracenote, Inc. in the United States and/or other countries.

This product incorporates Spotify software which is subject to third-party licences found here: https://www.spotify.com/connect/third-party-licenses

TIDAL and TIDAL logo are registered trademark of Aspiro AB in the European Union and other countries.

Overview of the media menu

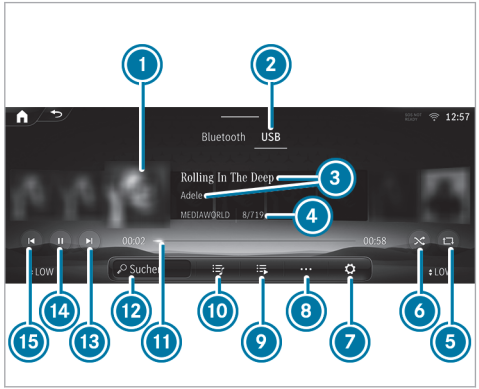

1. Album cover
2. Active media source
3. Track and artist
4. Active data storage medium and current track number/track in playback list
5. Repeat
6. Random playback

⑦ Settings
⑧ Additional options
⑨ Additional categories
⑩ Playlists and categories
⑪ Timeline
⑫ Media search
⑬ Next track or fast forward
⑭ Controls playback
⑮ Previous track or fast rewind

Connecting the data storage medium to the multimedia system

Connecting USB devices

! NOTE Damage caused by high temperatures

High temperatures can damage USB devices.

▶ Remove the USB device after use and take it out of the vehicle.

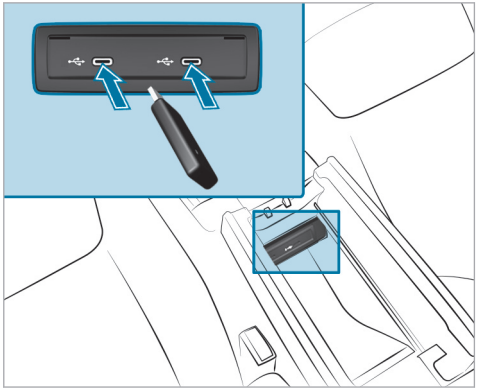

A multimedia connection unit is found in the stowage compartment under the armrest and has two type C USB ports. Depending on the vehicle's equipment, additional USB ports can be found in the storage compartment of the centre console and in the rear folding compartment.

▶ Connect the USB device to the USB port.

Searching for and authorising a Bluetooth® audio device

Requirements:

- Bluetooth® is activated on the multimedia system and audio equipment.
- The audio equipment supports the Bluetooth® audio profiles A2DP and AVRCP.
- The audio equipment is "visible" for other devices.

Multimedia system:

→ ⌂ ▸▸ Media ▸▸ Bluetooth

Authorising a new Bluetooth® audio device

▶ Select Connect device.
Detected equipment is displayed in the device list.

▶ Select an audio device.
Authorisation starts. A code is displayed on the multimedia system and on the mobile phone.

▶ If the codes are identical, confirm on the audio equipment.

- Select No, only music.
  The Bluetooth® audio equipment is connected with the multimedia system.

Connecting previously authorised Bluetooth® audio equipment

- Select a Bluetooth® audio device from the list.
  The connection is being established.

Starting media playback

Requirements:
- A data storage medium is connected to the multimedia system.

Multimedia system:
→ [⌂] ▸▸ Media

- Select a media source.

Controlling media playback

Multimedia system:
→ [⌂] ▸▸ Media

- **To pause playback:** select [⏸].
- **To continue playback:** select [▶].
- **To repeat a track:** select [↻].
  For the repeat function there are the following settings:
  - **Select once:** the active playlist is repeated.
  - **Select twice:** the current track is repeated.
  - **Select three times:** the repeat function is deactivated.
- **To play back tracks in random order:** select [⤮].
- **To rewind or fast-forward a track:** tap on the desired point on the timeline.
- **To select the next track:** select [⏭].
- **To select the previous track:** select [⏮].
- **To scroll through tracks quickly:** press and hold [⏮] or [⏭].
- **To show the current track list:** select [♫].

Additional options for setting media playback

Multimedia system:
→ [⌂] ▸▸ Media

Calling up additional options

- Select [•••].
  The additional options are shown.
- Select an option.

Media search

Notes about the search function in categories

Under [♫] you can search through all available media files. There are several categories available for selection. The categories shown depend on the connected device and data format.

ⓘ The categories are available as soon as the entire media content has been read in and analysed.
Availability of the media search with Android devices may be limited.

Starting a search in categories

Multimedia system:

→ [⌂] ▸▸ Media ▸▸ [≡♪]

▶ Select a category.

Using the keyword search

Multimedia system:

→ [⌂] ▸▸ Media

You can look for content using the keyword search with free text input.

▶ Select [🔍].
A keyboard for character entry appears.

▶ Enter the term searched for.

ⓘ The search begins with the first character entered. The more characters entered the more concrete the search results become.

▶ Select the desired entry from the result list.
If a list with several tracks is selected, then this is opened in the search.

To playback all of the tracks in the list, select [•••] and then Play now.

Music online

Requirements

- There is an account for the music streaming service.
- A subscription for the music streaming service has been obtained.
- The data volume is available.

  Depending on the country, data volume may need to be purchased.
- A fast Internet connection for data transmission free of interference.

ⓘ The functions and services are country-dependent. For more information, consult a Mercedes-Benz service centre.

Multimedia system:

→ [⌂] ▸▸ Media

Adding a streaming provider the first time you start the application

▶ Select Online music.
The overview of all supported streaming providers appears.

▶ Select a streaming provider.
A QR code is shown on the display.

▶ Scan the QR code with the mobile phone.

▶ Confirm the connection request on the mobile phone.

Adding more streaming providers

▶ Select Online music.
The last active streaming provider is active.

▶ Select [⚙].

▶ Select Music services.
The overview of all supported streaming providers appears.

▶ Select a streaming provider.
A QR code is shown on the display.

▶ Scan the QR code with the mobile phone.

▶ Confirm the connection request on the mobile phone.

Logging out from a streaming provider

▶ Select Online music.
The last active streaming provider is active.

▶ Select [⚙].

▶ Select Music services.
The overview of all supported streaming providers appears.
▶ ⚙ next to the streaming provider.
▶ Tap on Log out.

Calling up music online

Multimedia system:

⌂ ▸▸ Media

▶ Select Online music.

Music playback can be controlled with the Touch Control or by using the media application.

Searching for music in online music

Multimedia system:

⌂ ▸▸ Media ▸▸ Online music

Searching for categories in online music

The media content of the streaming provider can be scanned through in the category search. The available categories and the symbol for the category search depend on the streaming provider.

▶ Start the category search.
The list of available categories appears.
▶ Select a category.

Keyword search in online music

You can look for content using the keyword search with free text input.

▶ Select 🔍.
A keyboard for character entry appears.
▶ Enter the term searched for.

ⓘ The more characters entered when using the keyword search, the more concrete the search results are.

▶ Select the desired entry from the result list.
Depending on the selected hit, playback is started or a lower level in the search is opened.

Calling up online music settings

Multimedia system:

⌂ ▸▸ Media ▸▸ Online music

▶ Select ⚙.
▶ Select Music services.
▶ Select ⚙ next to a streaming provider.
▶ Select a setting.

ⓘ Information about the linked accounts can be displayed using the ⚙ gear icon next to the configured streaming provider. The available information depends on what is offered by the provider of the streaming service.

Information about Dolby Atmos®

The MBUX multimedia system enables playback of Dolby Atmos® content via the Burmester® sound system, thereby providing an even more immersive three-dimensional sound experience.

ⓘ The function is available with Apple Music® streaming or by using a USB device with the corresponding file formats.

ⓘ The availability of this function is equipment-dependent.

Switching Dolby Atmos® on or off

Requirements

- An account for the Apple Music® music streaming service is available.
- A subscription for the Apple Music® music streaming service has been obtained.
- Sufficient data volume is available.

Depending on the country, data volume may need to be purchased.

- A fast Internet connection for data transmission free of interference.

ⓘ The functions and services are country-dependent. For more information, consult a Mercedes-Benz service centre.

Multimedia system:

→ [⌂] ▸▸ Media

▶ Select Online music.
The overview of all supported streaming providers appears.

▶ Select Apple Music®.

▶ Select [⚙].

▶ Tap [◐] to switch on Dolby Atmos®.

or

▶ Tap [◐] to switch off Dolby Atmos®.
Tracks which are present or available in Dolby Atmos® will be played appropriately by the sound system using this format.

Radio

Switching on the radio

Multimedia system:

→ [⌂] ▸▸ [♪] Radio

▶ Start the application on the multimedia system home screen.
The radio menu appears. You will hear the last station played on the last frequency band selected.

Radio overview

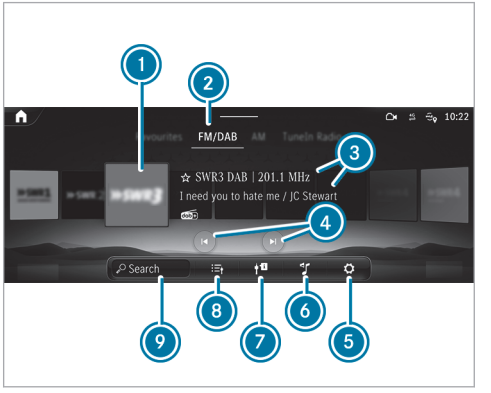

1. Preview image
2. Active frequency band
3. Station name, set frequency and additional information on the station
4. Previous or next station
5. Settings
6. Sound settings

7 Switches on traffic reports
8 Station list
9 Search

Setting the frequency band

Multimedia system:

→ [⌂] ▸▸ [♪] Radio

▶ Select a frequency band or a favourite.

Selecting a radio station

Multimedia system:

→ [⌂] ▸▸ [♪] Radio

▶ Swipe to the left or right on the control element or select a radio station.

Calling up the radio station list

Multimedia system:

→ [⌂] ▸▸ [♪] Radio

▶ Select [≡].
The station list appears.

▶ Swipe the station list up or down.

▶ Select a station.

Searching for radio stations using station names or frequency entry

Multimedia system:

→ [⌂] ▸▸ [♪] Radio

▶ Select [🔍].

▶ Enter a station name or frequency.

▶ Select a station.

Selecting a recommended radio station

Requirements:

- The multimedia system has gathered sufficient data in order to show station suggestions.

Multimedia system:

→ [⌂] ▸▸ [♪] Radio

▶ Select [🔍].
The recommended stations are shown.

▶ Select a suggested station.
The selected station is played.

Storing radio stations

Multimedia system:

→ [⌂] ▸▸ [♪] Radio

▶ Select a radio station.

▶ Select [☆].

Managing favourites

Multimedia system:

→ [⌂] ▸▸ [♪] Radio ▸▸ Favourites

Moving stations

▶ Press [≡★].
The list of favourites appears.

▶ Press [•••] to the far right of the station name.

▶ Select Move.

▶ Move the station to the new position.

Setting station tracking via Internet radio

Requirements

- A fast Internet connection for data transmission free of interference.

Multimedia system:

Radio

▶ Select .

▶ Select Internet radio.

▶ Activate or deactivate the Service Following function.
When the function is on, the station is searched for via Internet Radio.

If you are driving out of the station's coverage area and the station is available via Internet radio, the Poor reception. Tap here to switch to Internet radio. message appears on the central display.

Calling up a slide show (FM/DAB radio mode)

Multimedia system:

Radio

The slide show displays additional information provided by the station as an image. This can include logos, album covers, music tracks, programmes, news or service information, for example.

ⓘ The slide show is available for DAB+ channels that broadcast additional information.

▶ Press the station picture on the central display.
The image is enlarged.

Switching a slideshow on or off (FM/DAB radio mode)

Multimedia system:

Radio

▶ Switch DAB Slideshow or Expanded Radio Slideshow on or off .
When both slideshows are switched on, the contents of both slideshows alternate.

Activating/deactivating the frequency fix function

Multimedia system:

Radio

Active frequency band

▶ Activate or deactivate Frequency fix.
If the function is activated, the set frequency is kept even if the reception is poor.

Activating/deactivating traffic announcements

Multimedia system:

Radio

▶ Select Radio announcements.
The traffic information is switched on or off.

Activating/deactivating radio announcements

Multimedia system:

Radio

▶ Switch on Radio announcements.
The selected radio announcements are played.

When Radio announcements are first switched on, Traffic information service (TA), Travel and Warning are preset.

or

▶ Switch off Radio announcements.
No radio announcements are played.

Selecting radio announcements

Multimedia system:

↳ [⌂] ▸▸ [i] Radio ▸▸ [⚙] ▸▸ Radio announcements

▶ Switch an announcement on ☑ or off.
For example, Traffic information service (TA), Travel or Warning can be selected.

ⓘ The radio announcements are not station-dependent.

Setting the traffic information service volume increase

Multimedia system:

↳ [⌂] ▸▸ Settings ▸▸ System ▸▸ Audio

▶ Select Navigation & traffic announcements.

▶ Set a value for Traffic announc. vol. increase.

Displaying radio text

Multimedia system:

↳ [⌂] ▸▸ [i] Radio ▸▸ [⚙] ▸▸ Active frequency band

▶ Activate or deactivate Radio text information.

Showing or hiding lyrics

ⓘ The function is equipment-dependent.

Multimedia system:

↳ [⌂] ▸▸ [i] Radio ▸▸ [•••]

Showing lyrics

▶ Select Show lyrics.
The lyrics, album cover, title and artist of the song currently playing on the radio are displayed.

Swipe up or down to go to the bottom or top section of the lyrics.

If no lyrics are available for the song currently playing on the radio, Show lyrics is greyed out.

Hiding lyrics

▶ Select the cross at the top of the lyrics display.

or

▶ Select [↩].
The radio menu appears.

Sound

Sound settings

Information about the sound system

The sound system has a total output of 100 W and is equipped with six speakers. It is available for all functions in the radio and media modes.

ⓘ The call can also be made from other audio sources. Replace Media with, for example, Radio in the menu path.

Calling up the sound menu

Multimedia system:

↳ [⌂] ▸▸ Media ▸▸ [⚙]

▶ Select one of the functions shown to make settings.

Adjusting treble, mid-range and bass settings

Multimedia system:

↳ [⌂] ▸▸ Media ▸▸ [⚙]

▶ Set Treble, Mid or Bass.

Switching loudness normalisation on or off

Multimedia system:

↳ [⌂] ▸▸ Media ▸▸ [⚙] ▸▸ Loudness normalisation

The function compensates for differing loudness when changing between audio sources and within an audio source. Several levels are available for this purpose. The currently set level is displayed.

The loudness normalisation can also be switched off.

▶ Switch on one level.

or

▶ Switch off the loudness normalisation.

Setting the balance and fader

Multimedia system:

↳ [⌂] ▸▸ Media ▸▸ [⚙] ▸▸ Balance and Fader

Adjusting the balance

▶ In the grid shown, move the volume distribution between the right and left speakers in the vehicle.
The volume is distributed between the right and left-hand speakers.

Adjusting the fader

▶ In the grid shown, move the volume distribution between the front and rear speakers in the vehicle.
The volume is distributed between the front and rear speakers.

Burmester® surround sound system

Information about the Burmester® surround sound system

The Burmester® surround sound system has a total output of 590 W and is equipped with 12 speakers. It is available for all functions in the radio and media modes.

ⓘ The call can also be made from other audio sources. Replace Media with, for example, Radio in the menu path.

Calling up the sound menu in the Burmester® surround sound system

Multimedia system:

→ [⌂] ▸▸ Media ▸▸ [⚙]

▶ Select one of the functions shown to make settings.

Adjusting the treble, mid and bass settings on the Burmester® surround sound system

Multimedia system:

→ [⌂] ▸▸ Media ▸▸ [⚙] ▸▸ Equaliser

▶ Set Treble, Mid or Bass.

Switching loudness normalisation in the Burmester® surround sound system on or off

Multimedia system:

→ [⌂] ▸▸ Media ▸▸ [⚙] ▸▸ Equaliser ▸▸ Loudness normalisation

The function compensates for differing loudness when changing between audio sources and within an audio source. Several levels are available for this purpose. The currently set level is displayed.

Switch off loudness normalisation as follows:

▶ Switch on one level.

or

▶ Switch off the loudness normalisation.

Adjusting the balance and fader in the Burmester® surround sound system

Multimedia system:

→ [⌂] ▸▸ Media ▸▸ [⚙] ▸▸ Balance and Fader

Adjusting the balance

▶ Move the volume distribution between the right and left sides of the vehicle in the grid shown.
The volume is distributed between the speakers on the left and right sides in the vehicle.

Adjusting the fader

▶ Move the volume distribution between the front and rear of the vehicle in the grid shown.
The volume is distributed between the speakers in the front and rear of the vehicle.

ⓘ Setting 0 is recommended for high quality music and voice reproduction.

Selecting a sound profile in the Burmester® surround sound system

Multimedia system:

→ [⌂] ▸▸ Media ▸▸ [⚙]

Setting an existing sound profile

▶ Select a sound profile.

Setting up a personal sound profile

▶ Select Personal sound profile and [⚙].

▶ Select Reconfigure.

▶ Restart the set-up assistant.

Setting up a personal sound profile for the first time:

▶ Select Personal sound profile.

▶ Open the set-up assistant with Start.

▶ Observe the messages on the display and select the preferred settings.
The personal sound profile is created with the selected settings and can be selected in the Sound profiles menu.

Changing individual settings of the personal sound profile at a later date:

▶ Select Personal sound profile and [⚙].

▶ Make the required adjustments.

ⓘ The availability of a Personal sound profile is dependent on the equipment.
The set-up assistant is available when the vehicle is stationary.

Adjusting the sound focus in the Burmester® surround sound system

Multimedia system:

→ [⌂] ▸▸ Media ▸▸ [⚙] ▸▸ Sound focus

▶ Select a seat or row of seats for the sound focus.
The sound focus is activated.

or

▶ Select the seat or row of seats again.
The sound focus is deactivated.

Advanced sound system

Information about the Advanced sound system

The Advanced sound system has a total output of 225 W and is equipped with ten speakers. It is available for all functions in the radio and media modes.

ⓘ The call can also be made from other audio sources. Replace Media with, for example, Radio in the menu path.

Calling up the sound menu in the Advanced sound system

Multimedia system:

→ [⌂] ▸▸ Media ▸▸ [⚙]

Adjusting sound settings

▶ Select one of the functions shown.

Adjusting treble, mid-range and bass settings in the Advanced sound system

Multimedia system:

→ [⌂] ▸▸ Media ▸▸ [⚙]

▶ Set Treble, Mid or Bass.

Switching loudness normalisation in the Advanced sound system on or off

Multimedia system:

→ [⌂] ▸▸ Media ▸▸ [⚙] ▸▸ Equaliser ▸▸ Loudness normalisation

Switching off loudness normalisation

▶ Switch on one level.

or

▶ Switch off loudness normalisation.

Setting the balance/fader in the Advanced sound system

Multimedia system:

→ [⌂] ▸▸ Media ▸▸ [⚙] ▸▸ Balance and Fader

Adjusting the balance

▶ Move the volume distribution between the right and left sides of the vehicle in the grid shown.
The volume is distributed between the speakers on the left and right sides in the vehicle.

Adjusting the fader

▶ Move the volume distribution between the front and rear of the vehicle in the grid shown.
The volume is distributed between the speakers in the front and rear of the vehicle.

ASSYST PLUS service interval display

Function of the ASSYST PLUS service interval display

The ASSYST PLUS service interval display on the driver's display provides information on the remaining time or distance before the next service due date.

You can hide this service display using the back button ⮌ on the steering wheel.

Depending on how the vehicle is used, the ASSYST PLUS service interval display may shorten the service interval, e.g. in the following cases:

- Mainly short-distance driving
- When the engine is often left idling for long periods
- In the event of frequent cold start phases
- **Vehicles with diesel particulate filters:** in the event of frequently interrupted regeneration of the diesel particulate filter

Mercedes-Benz recommends avoiding such operating conditions.

You can obtain information concerning the servicing of your vehicle from a qualified specialist workshop, e.g. a Mercedes-Benz Service Centre.

Displaying the service due date

Driver's display:

→ Service

The next service due date is displayed.

▶ **To exit the display:** press the back button ⮌ on the steering wheel.

Information on regular maintenance work

! NOTE Premature wear through failure to observe service due dates

Maintenance work which is not carried out at the right time or incompletely can lead to increased wear and damage to the vehicle.

▶ Adhere to the prescribed service intervals.

▶ Always have the prescribed maintenance work carried out at a qualified specialist workshop.

Notes on special service requirements

The prescribed service interval is based on normal operation of the vehicle. Have the maintenance work carried out more often than prescribed if operating conditions are difficult or the vehicle is subject to increased stress.

The ASSYST PLUS service interval display is only an aid. It is the responsibility of the driver of the vehicle to have maintenance work carried out more often than prescribed due to actual operating conditions and/or stresses.

Examples of arduous operating conditions:

- Regular city driving with frequent intermediate stops
- Mainly short-distance driving
- Frequent operation in mountainous terrain or on poor road surfaces

- When the engine is often left idling for long periods
- Operation in particularly dusty conditions and/or if air-recirculation mode is frequently used

In these or similar operating conditions, have the interior air filter, air filter, engine oil and oil filter, for example, changed more frequently. Check the tyres more frequently if the vehicle is operated under increased stress. Further information can be obtained at a qualified specialist workshop.

Battery disconnection periods

The ASSYST PLUS service interval display can calculate the service due date only when the battery is connected.

▶ Display and note down the service due date on the driver display before disconnecting the battery (→ page 552).

Maintenance Management

Notes about Maintenance Management

If the Maintenance Management service is activated, relevant data is automatically transferred to the Mercedes-Benz customer centre.

The customer centre transmits the data to the service partner that you have entered on the Mercedes me website at: http://www.mercedes.me. You will then receive individual recommendations regarding the maintenance of your vehicle.

ⓘ The calculation of the optimal transmission time of the maintenance request to the service partner is subject to technical limitations that may cause the maintenance recommendation to be perceived as too early or too late or not to be made at all. In this case, you can conveniently arrange a maintenance appointment with the customer centre via the maintenance reminder in the multimedia system.

ⓘ Maintenance Management and the maintenance reminder in the multimedia system are not available in every country. Contact a Mercedes-Benz service centre to find out whether this function is available in your country.

Data transferred when using Maintenance Management

When the service is activated, relevant data is automatically transferred to determine the required scope of maintenance as well as fault detection and fault rectification.

Details on data transfer can be found in the data protection information for the Mercedes me connect services. These can be found at: https://www.mercedes.me under "My Mercedes me account", "Terms of use".

ⓘ Maintenance Management and the maintenance reminder in the multimedia system are not available in every country.

Telediagnostics

Notes about Telediagnostics

ⓘ This service is not available in all countries.

The vehicle can detect if certain wear parts need to be replaced or if malfunctions have occurred in vehicle systems. If the Telediagnostics service is activated, relevant data is automatically transmitted to the manufacturer. If fault conditions are detected by the vehicle system self-diagnosis, the system transmits recommendations for action to the Mercedes-Benz customer centre depending on the fault detected. The customer centre transmits the data to the service partner that you have entered on the Mercedes me website at: http://www.mercedes.me.

For selected faults, the notification that a malfunction has been detected may appear in the multimedia system with a request to contact the Mercedes-Benz Customer Centre. From this message, a call can be made directly to the customer centre for assistance.

ⓘ The transmission of a notification to the multimedia system depends on the country, vehicle model and equipment and requires a fast data connection, over which the service provider has no influence.

ⓘ Reliable fault detection is subject to technical limitations. Therefore, only a limited selection of faults can be detected and recommendations for action transmitted to the customer centre and the service partners. Mercedes-Benz AG is continuously working on the expansion of this service. The fault detection depends on the country, vehicle model and equipment.

Data transferred when using Telediagnostics

When the service is activated, relevant data is automatically transferred to determine the required scope of maintenance as well as fault detection and fault rectification.

Details on data transfer can be found in the data protection information for the Mercedes me connect services. These can be found at: https://www.mercedes.me under "My Mercedes me account", "Terms of use".

ⓘ The scope of the transmitted data depends on the vehicle model and its equipment. For technical reasons, not all data is available at all times.

Engine compartment

Active bonnet (pedestrian protection)

Operation of the active bonnet (pedestrian protection)

In certain accident situations, the actuation of the active bonnet reduces the risk of injury to pedestrians. The rear area of the bonnet is raised by approximately 70 mm.

For the drive to the workshop, reset the actuated active bonnet yourself (→ page 554).

After the active bonnet has been actuated, pedestrian protection may be limited.

Have the full functionality of the active bonnet restored in a qualified specialist workshop.

Resetting the active bonnet

⚠ **WARNING** Risk of burns from hot component parts in the engine compartment

Certain component parts in the engine compartment can be very hot, e.g. the engine, the cooler and parts of the exhaust system.

▶ Allow the engine to cool down and only touch component parts described in the following.

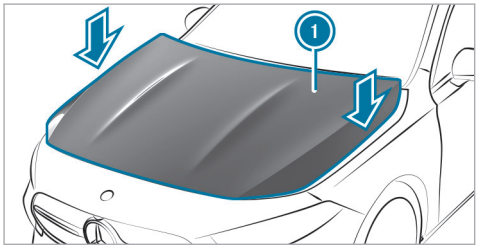

▶ With your hand flat, push down active bonnet ① in the area around the hinges on both sides (arrows).
In doing so, the actuator is depressurised and you may hear a hissing sound.

The engine bonnet must engage in position.

▶ If the active bonnet can be raised slightly at the rear in the area of the hinges, repeat the step until it engages correctly.

Opening and closing the bonnet

⚠ **DANGER** Risk of fatal injuries when carrying out maintenance work during the charging process

During the charging process, the high-voltage on-board electrical system is under high voltage.

▶ Do not perform any maintenance work during the charging process.

⚠ **WARNING** Risk of accident due to driving with the bonnet unlocked

The bonnet may open and block your view.

▶ Never release the bonnet when driving.

▶ Before every trip, ensure that the engine bonnet is locked.

⚠ **WARNING** Risk of accident and injury when opening and closing the bonnet

The bonnet may suddenly drop into the end position.

There is a risk of injury for anyone in the engine bonnet's range of movement.

▶ Do not open or close the bonnet if there is a person in the bonnet's range of movement.

⚠ **WARNING** Risk of burns when opening the bonnet

If you open the bonnet in the event of an overheated engine or fire in the engine compartment, the following situations may occur:

- You may come into contact with hot gases.
- You may come into contact with other escaping hot operating fluids.

▶ Before opening the bonnet, allow the engine to cool down.

▶ In the event of a fire in the engine compartment, keep the bonnet closed and call the fire service.

WARNING Risk of injury due to moving parts

Components in the engine compartment may continue to run or start unexpectedly even when the drive system is switched off.

Observe the following if you must open the bonnet:

- ▶ Switch off the vehicle.
- ▶ Never touch the danger zones surrounding moving components, e.g. the rotation area of the fan.
- ▶ Remove jewellery and watches.
- ▶ Keep items of clothing and hair away from moving parts.

WARNING Risk of injury from touching components under voltage

The ignition system and the fuel injection system operate at high voltage. You could receive an electric shock.

- ▶ Never touch ignition system or fuel injection system components when the vehicle is switched on.

The live components include the following, for example:

- Ignition coils
- Fuel injectors
- Electric lines to the ignition coils and the fuel injectors

WARNING Risk of burns from hot component parts in the engine compartment

Certain component parts in the engine compartment can be very hot, e.g. the engine, the cooler and parts of the exhaust system.

- ▶ Allow the engine to cool down and only touch component parts described in the following.

WARNING Risk of injury from using the windscreen wipers when the bonnet is open

If the windscreen wipers start moving when the bonnet is open, you could be trapped by the wiper linkage.

- ▶ Always switch off the windscreen wipers and the vehicle first if you need to open the bonnet.

Opening the bonnet

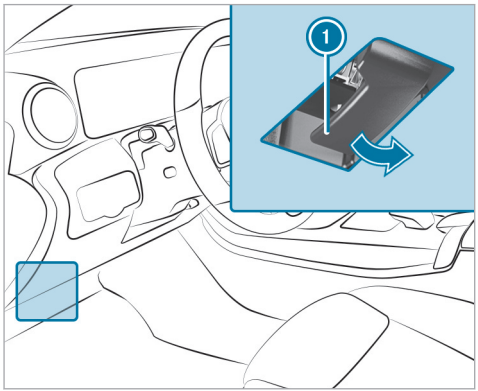

▶ To release the bonnet, pull on handle ①.

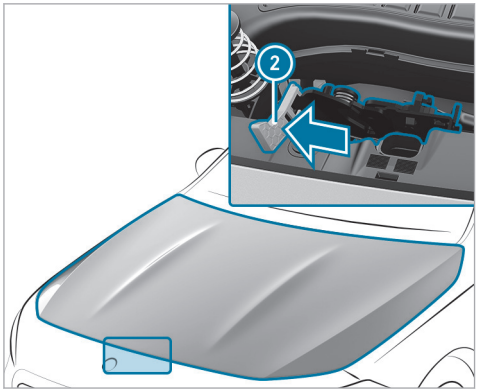

▶ Push yellow handle ② of the bonnet catch to the left as far as it will go (palm downwards). Lift the bonnet until it is automatically raised by the pneumatic spring.

Closing the bonnet

▶ Lower the bonnet and let it drop from a height of approximately 20 cm.

▶ If the bonnet can still be lifted slightly, open the bonnet again and close it with a little force until it engages correctly.

Engine oil

Checking the engine oil level using the driver's display

Requirements

- The engine has been warmed up.
- The vehicle is parked on a level surface.
- The engine is running at idle speed.
- The bonnet is closed.

Determining the engine oil level can take up to 30 minutes with a normal driving style and even longer with an active driving style.

Driver's display:

→ Service

The engine oil level is shown.

One of the following messages will appear on the driver's display:

- Engine oil level Measuring now...: the engine oil level cannot be determined yet.

▶ Repeat the request after a maximum of 30 minutes' driving.

- Engine oil level OK and the bar display for indicating the engine oil level on the driver's display is green and is between "min" and "max": the engine oil level is correct.
- Engine oil level Top up 1,0 l and the bar display for indicating the engine oil level on the driver's display is yellow and is below "min":

▶ Add 1 l of engine oil.

- Engine oil level Reduce and the bar display for indicating the engine oil level on the driver's display is yellow and is above "max":

▶ Drain off any excess engine oil that has been added. To do so, consult a qualified specialist workshop.

- For engine oil level, switch on vehicle

▶ Switch on the vehicle to check the engine oil level.

- Engine oil level System inoperative: The oil level sensor is defective or not connected.

▶ Consult a qualified specialist workshop.

- Engine oil level System currently inoperative

▶ Close the bonnet.

Topping up engine oil

DANGER Risk of fatal injuries when carrying out maintenance work during the charging process

During the charging process, the high-voltage on-board electrical system is under high voltage.

▶ Do not perform any maintenance work during the charging process.

WARNING Risk of burns when opening the bonnet

If you open the bonnet in the event of an overheated engine or fire in the engine compartment, the following situations may occur:

- You may come into contact with hot gases.
- You may come into contact with other escaping hot operating fluids.

▶ Before opening the bonnet, allow the engine to cool down.

▶ In the event of a fire in the engine compartment, keep the bonnet closed and call the fire service.

WARNING Risk of injury due to moving parts

Components in the engine compartment may continue to run or start unexpectedly even when the drive system is switched off.

Observe the following if you must open the bonnet:

- Switch off the vehicle.
- Never touch the danger zones surrounding moving components, e.g. the rotation area of the fan.
- Remove jewellery and watches.
- Keep items of clothing and hair away from moving parts.

WARNING Risk of burns from hot component parts in the engine compartment

Certain component parts in the engine compartment can be very hot, e.g. the engine, the cooler and parts of the exhaust system.

- Allow the engine to cool down and only touch component parts described in the following.

WARNING Risk of fire and injury from engine oil

If engine oil comes into contact with hot component parts in the engine compartment, it may ignite.

- Make sure that no engine oil is spilled next to the filler opening.
- Allow the engine to cool off and thoroughly clean the engine oil from component parts before starting the vehicle.

NOTE Engine damage caused by an incorrect oil filter, incorrect oil or additives

- Do not use engine oils or oil filters which do not correspond to the specifications explicitly prescribed for the service intervals.
- Follow the instructions on the service interval display for changing the engine oil and observe the prescribed change intervals.
- Do not use additives.

NOTE Damage caused by topping up too much engine oil

Excess engine oil can damage the engine or catalytic converter.

- Have excess engine oil removed at a qualified specialist workshop.

ⓘ Depending on driving style, the vehicle consumes up to 0.8 litres of oil per 1000 km. The oil consumption may also be higher than this when the vehicle is new or if you frequently drive at high engine speeds.

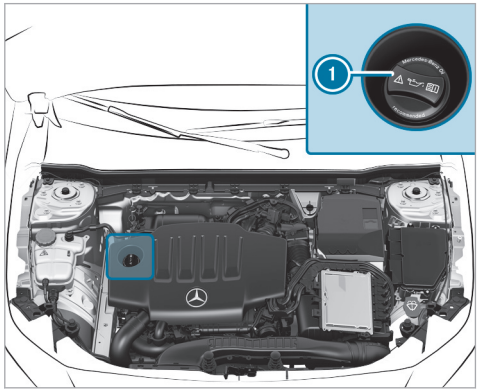

- Turn cap ① anti-clockwise and remove it.
- Top up the engine oil.
- Replace cap ① and turn it clockwise until it engages.
- Check the oil level again (→ page 29).

Checking the coolant level

DANGER Risk of fatal injuries when carrying out maintenance work during the charging process

During the charging process, the high-voltage on-board electrical system is under high voltage.

- Do not perform any maintenance work during the charging process.

WARNING Risk of burns when opening the bonnet

If you open the bonnet in the event of an overheated engine or fire in the engine compartment, the following situations may occur:

- You may come into contact with hot gases.
- You may come into contact with other escaping hot operating fluids.

- Before opening the bonnet, allow the engine to cool down.
- In the event of a fire in the engine compartment, keep the bonnet closed and call the fire service.

WARNING Risk of injury due to moving parts

Components in the engine compartment may continue to run or start unexpectedly even when the drive system is switched off.

Observe the following if you must open the bonnet:

- Switch off the vehicle.
- Never touch the danger zones surrounding moving components, e.g. the rotation area of the fan.
- Remove jewellery and watches.
- Keep items of clothing and hair away from moving parts.

WARNING Risk of scalding from hot coolant

If you open the cap, you could scald yourself.

- Allow the engine to cool down before opening the cap.
- When opening the cap, wear protective gloves and safety glasses.
- Open the cap slowly to release pressure.

WARNING Risk of burns from hot component parts in the engine compartment

Certain component parts in the engine compartment can be very hot, e.g. the engine, the cooler and parts of the exhaust system.

▶ Allow the engine to cool down and only touch component parts described in the following.

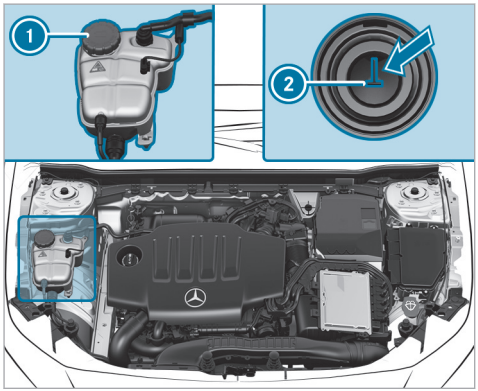

▶ Park the vehicle on a level surface.

▶ Check the coolant temperature display on the driver's display.
The coolant temperature must be below 40°C.

▶ Slowly turn cap ① anti-clockwise to release overpressure.

▶ Continue turning cap ① anti-clockwise and remove it.

The coolant level is correct in the following cases:

- If the engine is cold, the coolant is up to marker bar ②.
- If the engine is warm, the coolant is up to 1.5 cm above marker bar ②.

▶ If necessary, top up with coolant that has been approved for Mercedes-Benz.

Topping up the windscreen washer system

⚠ **DANGER** Risk of fatal injuries when carrying out maintenance work during the charging process

During the charging process, the high-voltage on-board electrical system is under high voltage.

▶ Do not perform any maintenance work during the charging process.

⚠ **WARNING** Risk of burns when opening the bonnet

If you open the bonnet in the event of an overheated engine or fire in the engine compartment, the following situations may occur:

- You may come into contact with hot gases.
- You may come into contact with other escaping hot operating fluids.

▶ Before opening the bonnet, allow the engine to cool down.

▶ In the event of a fire in the engine compartment, keep the bonnet closed and call the fire service.

⚠ **WARNING** Risk of injury due to moving parts

Components in the engine compartment may continue to run or start unexpectedly even when the drive system is switched off.

Observe the following if you must open the bonnet:

- Switch off the vehicle.
- Never touch the danger zones surrounding moving components, e.g. the rotation area of the fan.
- Remove jewellery and watches.
- Keep items of clothing and hair away from moving parts.

WARNING Risk of burns from hot component parts in the engine compartment

Certain component parts in the engine compartment can be very hot, e.g. the engine, the cooler and parts of the exhaust system.

- Allow the engine to cool down and only touch component parts described in the following.

WARNING - Risk of fire and injury due to windscreen washer concentrate

Windscreen washer concentrate is highly flammable. It could ignite if it comes into contact with hot engine component parts or the exhaust system.

- Make sure that no windscreen washer concentrate spills out next to the filler opening.

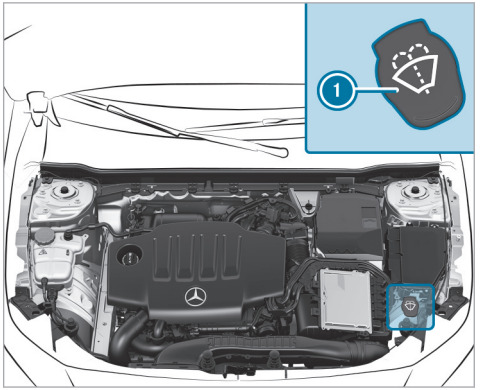

- Remove cap 1 by the tab.
- Top up the washer fluid.

Keeping the air/water duct free

- Keep the area between the bonnet and the windscreen free of deposits, e.g. ice, snow or leaves.

Cleaning and care

Information on washing the vehicle in a car wash

⚠ **WARNING** Risk of an accident due to reduced braking power after washing the vehicle

Braking efficiency is reduced after washing the vehicle.

▶ After the vehicle has been washed, brake carefully while paying attention to the traffic conditions until braking power has been fully restored.

! **NOTE** Damage from automatic braking

If one of the following functions is activated, the vehicle will brake automatically in certain situations:

- Active Brake Assist
- Active Distance Assist DISTRONIC
- HOLD function
- Active Parking Assist

To avoid damaging the vehicle, deactivate these systems e.g. during towing or in the car wash.

! **NOTE** Damage due to unsuitable car wash

▶ Before driving into a car wash make sure that the car wash is suitable for the vehicle dimensions.

▶ Ensure there is sufficient ground clearance between the underbody and the guide rails of the car wash.

▶ Ensure that the clearance width of the car wash, in particular the width of the guide rails, is sufficient.

To avoid damage to your vehicle when using a car wash, ensure the following beforehand:

- Active Distance Assist DISTRONIC is deactivated.
- the HOLD function is switched off.
- the 360° Camera or the reversing camera is switched off.
- the side windows and sliding sunroof are completely closed.
- the blower for the ventilation and heating is switched off.
- the windscreen wiper switch is in position [0].
- the key is at a minimum distance of 3 m away from the vehicle. Otherwise the boot lid could open unintentionally.
- for car washes with a conveyor system:
  - neutral [N] is engaged.
  - If you would like to leave the vehicle while it is being washed, make sure the key is located in the vehicle. The park position [P] is otherwise automatically engaged.

ⓘ If, after the car wash, you remove the wax from the windscreen and wiper rubbers, this will prevent smearing and reduce wiper noise.

Car wash mode

In car wash mode, the vehicle is prepared for driving into an automatic car wash. Car wash mode

can be activated up to a speed of 20 km/h (→ page 564).

The following settings will be adjusted when car wash mode is activated:

- The outside mirrors will be folded in.
- To prevent the windscreen washer system from starting up automatically, the rain sensor will be deactivated.
- The windows and the sliding sunroof will be closed.
- Air-recirculation mode will be activated.
- Parking Assist PARKTRONIC will be deactivated.
- **Vehicles with 360° camera:** the front image will be activated after approximately eight seconds.

If one of the settings cannot be selected, this is displayed by a [X] behind the respective setting.

Car wash mode will automatically be deactivated above a speed of 20 km/h.

The following settings will be reset when car wash mode is deactivated:

- The outside mirrors will be folded out.
- The rain sensor will be activated.
- Air-recirculation mode will be deactivated.
- Parking Assist PARKTRONIC will be reset to the previously selected setting.
- The windows and the sliding sunroof will remain closed.
- **Vehicles with 360° camera:** the front image will be deactivated at speeds above 18 km/h.

Activating/deactivating car wash mode

Requirements

- The vehicle is stationary.
- The vehicle is switched on.

Multimedia system:

→ [⌂] ▸▸ Settings ▸▸ Vehicle ▸▸ Driving

Activating car wash mode

▶ Select Car wash mode.

▶ Select Activate.

If one of the settings cannot be selected, this will be shown by a [X] next to the respective setting.

ⓘ For an overview of the settings made when you activate car wash mode (→ page 30).

Deactivating car wash mode

▶ Select Switch off.
The settings of car wash mode will be reset.

ⓘ Car wash mode is automatically deactivated as soon as your speed exceeds 20 km/h.

Information on using a high-pressure cleaner

⚠ **WARNING** Risk of an accident when using high-pressure cleaners with round-spray nozzles

The water jet can cause externally invisible damage.

Components damaged in this way may unexpectedly fail.

▶ Do not use a high-pressure cleaner with round-spray nozzles.

▶ Have damaged tyres or chassis parts replaced immediately.

To avoid damage to your vehicle, observe the following when using a high-pressure cleaner:

- The key is at a minimum distance of 3 m from the vehicle. Otherwise the boot lid could open unintentionally.
- Maintain a distance of at least 30 cm to the vehicle.
- **Vehicles with decorative foil:** Parts of your vehicle are covered with a decorative foil. Maintain a distance of at least 70 cm between the foil-covered parts of the vehicle and the nozzle of the high-pressure cleaner. Move the nozzle of the high-pressure cleaner around while cleaning. The water temperature of the high-pressure cleaner must not exceed 60 °C.
- Observe the information on the correct distance in the equipment manufacturer's operating instructions.
- Do not direct the nozzle of the high-pressure cleaner directly at sensitive parts, e.g. tyres, gaps, electrical components, batteries, illuminants or louvres.

Washing the vehicle by hand

! **NOTE** Engine damage due to water ingress

▶ Take care not to point the water jet directly towards the air inlet grille below the bonnet.

Observe the relevant legal requirements (e.g. in some countries, washing by hand is permitted only in specially designated wash bays).

▶ Use a mild cleaning agent (e.g. car shampoo).

▶ Do not use acidic cleaning agents.

▶ Wash the vehicle with lukewarm water using a soft car sponge. When doing so, do not expose the vehicle to direct sunlight.

▶ Carefully hose the vehicle off with water and dry using a chamois.

ⓘ Observe the notes on the care of car parts (→ page 567).

Notes on paintwork/matt finish paintwork care

To avoid damaging the paintwork and interfering with the driving assistance systems, please observe the following notes:

Paint

- Insect remains: soak with insect remover and rinse off the treated areas afterwards.
- Bird droppings: soak with water and rinse off afterwards.
- Tree resin, oils, fuels and greases: remove by rubbing gently with a cloth soaked in petroleum ether or lighter fluid.
- Coolant and brake fluid: remove with a damp cloth and clean water.
- Tar stains: use tar remover.
- Wax: use silicone remover.
- Do not attach stickers, foil or similar materials. Only have foil attached to the bumper at a qualified specialist workshop.

- Remove dirt immediately, where possible. Do not use acid solutions and acidic cleaners.

Matt finish

- Only use care products approved for Mercedes-Benz.
- Do not attach stickers, foils or similar materials. Only have foil attached to the bumper at a qualified specialist workshop.
- Do not polish the vehicle and light-alloy wheels.
- Only use car washes that correspond to the latest engineering standards.
- Do not use car wash programmes with a final hot wax treatment.
- Do not use paint cleaners, buffing or polishing products, gloss preservers, e.g.wax.

In the event of paintwork damage:

- Always have paintwork repairs carried out at a qualified specialist workshop.
- Make sure the radar sensors are working (→ page 303).

Notes on cleaning decorative films

Observe the "Notes on paintwork / matt finish paintwork care" (→ page 565). They also apply to matt decorative films.

Observe the notes on cleaning decorative films to avoid damage.

Cleaning

- For cleaning, use plenty of water and a mild cleaning agent without additives or abrasive substances (e.g. a car shampoo approved for Mercedes-Benz).
- Do not use acidic cleaning agents.
- Remove dirt as soon as possible. Avoid rubbing too hard in order not to damage the decorative film irreparably.
- If there is dirt on the finish or if the decorative film is dull: use the paint cleaner recommended and approved for Mercedes-Benz.
- Insect remains: soak with insect remover and rinse off the treated areas afterwards.
- Bird droppings: soak with water and rinse off afterwards.
- To prevent water stains, dry a film-wrapped vehicle with a soft, absorbent cloth after every car wash.

Avoiding damage to the decorative film

- The service life and colouring of decorative films are impaired by:
  - Sunlight
  - Temperature (e.g. hot air blower)
  - Weather conditions
  - Stone chippings and dirt
  - Chemical cleaning agents
  - Oily products
- Do not use polish on matt decorative film. Polishing will have the effect of shining the film-wrapped surface.
- Do not treat matt or structured decorative films with wax. Permanent stains may occur.

Scratches, corrosive deposits, areas affected by corrosion and damage caused by incorrect care cannot always be completely repaired. In this case, contact a qualified specialist workshop.

You can obtain more information on care and cleaning agents from the manufacturer.

In the case of film-wrapped surfaces, visual differences may occur between the surfaces that were not protected by a decorative film after a decorative film has been removed.

ⓘ Have work or repairs to decorative films carried out at a qualified specialist workshop (e.g. at a Mercedes-Benz Service Centre).

Notes on cleaning and care of car parts

⚠ **WARNING** Risk of entrapment if the windscreen wipers are switched on while the windscreen is being cleaned

If the windscreen wipers are set in motion while you are cleaning the windscreen or wiper blades, you can be trapped by the wiper arm.

▶ Always switch off the windscreen wipers and the vehicle before cleaning the windscreen or wiper blades.

! **NOTE** Damage due to use of acidic cleaning agents

▶ Do not use acidic cleaning agents. Otherwise, the surfaces could be damaged.

To avoid damage to the vehicle, observe the notes on cleaning and care of the following car parts:

Wheels and rims

- Use water and acid-free alloy wheel cleaners.
- Do not use acidic alloy wheel cleaners to remove brake dust. This could damage wheel bolts and brake components.
- To avoid corrosion of the brake discs and pads, drive the vehicle for a few minutes after cleaning before parking it. The brake discs and pads will warm up and dry out.

Windows

! **NOTE** Damage to electronic components due to excess fluids

When cleaning the windows from the inside, fluids such as cleaning agents or water may run down and get behind trim parts of the vehicle interior and cause damage to electronic components.

▶ Use cleaning agents as sparingly as possible.

▶ Immediately absorb any excess fluids.

- Clean the windows inside and outside with a damp cloth and with a cleaning agent recommended for Mercedes-Benz.
- Do not use dry cloths or abrasive or solvent-based cleaning agents to clean the insides of windows.

ⓘ After changing the wiper blades or treating the vehicle with wax, clean the windscreen thoroughly with cleaning agents recommended for Mercedes-Benz. Failure to observe the application instructions may result in damage, smear marks or dazzling spots.

ⓘ Remove external fogging or dirt on the windscreen in front of the multifunction camera. Otherwise, driving systems and driving safety systems may be impaired or unavailable (→ page 303).

Wiper blades

- Move the wiper arms into the replacement position (→ page 29).
- With the wiper arms folded out, clean the wiper blades with a damp cloth.

ⓘ Note that the wiper blades are coated. The coating may leave residue on a cloth. Do not rub the wiper blades excessively or clean them too often.

Exterior lighting

- Clean the lenses with a wet sponge and mild cleaning agent, such as car shampoo.
- Use only cleaning agents or cleaning cloths that are suitable for plastic lenses.

Vehicle socket (high-voltage battery)

- Use clean water and a soft cloth to clean the vehicle socket.
- Do not use high-pressure cleaners or cleaning agents, such as soap.

Sensors

- Clean the sensors in the front and rear part of the vehicle with car shampoo, plenty of water and a soft cloth (→ page 303).
- When using a high-pressure cleaner, maintain a minimum distance of 30 cm.

Cameras

- Open the camera cover with the multimedia system (→ page 358).
- Use clean water and a soft cloth to clean the camera lenses.
- Do not use a high-pressure cleaner.

ⓘ Remove external fogging or dirt on the windscreen in front of the multifunction camera. Otherwise, driving systems and driving safety systems may be impaired or unavailable (→ page 303).

Trailer hitch

- Observe the notes on care in the trailer hitch manufacturer's owner's manual.
- Do not clean the ball neck with a high-pressure cleaner or solvent.
- Remove traces of rust on the ball, e.g. with a wire brush.
- Remove dirt with a lint-free cloth.
- After cleaning, lightly oil or grease the ball head.

ⓘ Before using trailers with anti-swerve coupling, note the manufacturer's owner's manual.

Notes on care of the interior

⚠ **WARNING** Risk of injury from plastic parts breaking off after the use of solvent-based care products

Care and cleaning products containing solvents can cause surfaces in the cockpit to become porous. When the airbags are deployed, plastic parts may break away.

▶ Do not use any care or cleaning products containing solvents to clean the cockpit.

WARNING Risk of injury or fatal injuries from bleached seat belts

Bleaching or dyeing seat belts can severely weaken them.

This can, for example, cause seat belts to tear or fail in an accident.

▶ Never bleach or dye seat belts.

NOTE Property damage due to disinfectants

The interior includes a number of sensitive surfaces such as displays, plastics and leather.

Disinfectants can contain alcohol and other substances that penetrate and damage surfaces. Technology behind buttons and displays can also be damaged.

▶ Do not use disinfectant on interior surfaces.

To avoid damage to the vehicle, observe the following notes on cleaning and care:

Seat belts

- Clean with lukewarm and soapy water.
- Do not use chemical cleaning agents.
- Do not dry by heating them to over 80°C or exposing them to direct sunlight.

Display

- Switch off the display and let it cool down.
- Clean the surface carefully with a microfibre cloth and a suitable display care product (TFT-LCD).
- Do not use any other agents.

Head-up display

- Clean with a soft, non-static, lint-free cloth.
- Do not use cleaning agents.

Plastic trim

- Clean with a damp microfibre cloth.
- For heavy soiling: Use a cleaner recommended for Mercedes-Benz.
- Do not attach stickers, films or similar materials.
- Do not allow cosmetics, insect repellent or sun cream to come in contact with the plastic trim.

Real wood and trim elements

- Clean with a microfibre cloth.
- Black piano-lacquer look: clean with a damp cloth and soapy water.
- For heavy soiling: Use a cleaner recommended for Mercedes-Benz.
- Do not use solvent-based cleaning agents, polishes or waxes.

Roof lining

- Clean with a brush or dry shampoo.

Carpet

- Use a carpet and textile cleaning agent recommended for Mercedes-Benz.

Imitation leather steering wheel

- Clean the entire steering wheel with a damp cotton cloth and a 1% soap solution. Do not spot clean.
- Use cleaning and care products recommended for Mercedes-Benz.

- Do not use a microfibre cloth.
- Do not use oil-based cleaning and care products.

Steering wheel made of genuine leather or DINAMICA

NOTE Damage caused by wrong cleaners

▶ Do not use solvent-based cleaning agents such as tar remover or wheel cleaner; neither should you use polishes or waxes. Otherwise you may damage the finish.

- Clean with a damp cloth and a 1% soap solution and then wipe with a dry cloth.
- For heavy soiling: Use a cleaner recommended for Mercedes-Benz.
- Leather care: Use a leather care agent that has been recommended for Mercedes-Benz.
- Do not allow the leather to become too damp.
- Do not use a microfibre cloth.

ⓘ Leather is a natural product. It exhibits natural surface properties, such as differences in structure, marks caused by growth and injury or subtle colour differences. These surface properties are special features of leather and not material defects. Furthermore, leather is subject to a natural ageing process in which the surface properties change.

Genuine leather seat covers

- Vacuum up dirt such as crumbs or dust and then clean the seat covers with a damp cotton cloth and wipe down with a dry cloth. Regularly clean the seat covers.
- For heavy soiling: use a leather care agent recommended for Mercedes-Benz aftercare.
- Leather care: Use a leather care agent that has been recommended for Mercedes-Benz.
- Do not use a microfibre cloth.
- Do not allow the leather to become too damp.
- Do not use oil-based cleaning and care products.

ⓘ Leather is a natural product. It exhibits natural surface properties, such as differences in structure, marks caused by growth and injury or subtle colour differences. These surface properties are special features of leather and not material defects. Furthermore, leather is subject to a natural ageing process in which the surface properties change.
Waves or wrinkling in the seat cover may occur due to the stress on the seat; this is caused by the natural leather material.
Regular cleaning and care of the leather reduces soiling, wear marks and ageing damage and thus significantly extends its life span. Clothing that can leave stains (e.g. jeans) may discolour the leather.

DINAMICA seat covers

- Vacuum up dirt such as crumbs or dust and then use a damp cloth to clean.
- Do not use a microfibre cloth.

Imitation leather seat covers

- Vacuum up dirt such as crumbs or dust and then use a damp cotton cloth and a 1% soap solution to clean the entire seat cover. Do not spot clean.

- Use cleaning and care products recommended for Mercedes-Benz.
- Do not use a microfibre cloth.
- Do not use oil-based cleaning and care products.

Cloth seat covers

- Vacuum up dirt such as crumbs or dust and then use a damp microfibre cloth and a 1% soap solution to clean the entire seat cover. Do not spot clean.
- Use cleaning and care products recommended for Mercedes-Benz.
- Do not use oil-based cleaning and care products.

Emergency

Removing the safety vest

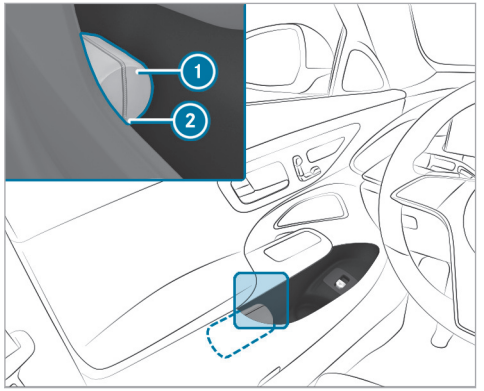

There is a high-visibility waistcoat compartment on the door shelves of all doors for storing a high-visibility waistcoat.

▶ To remove: pull out safety vest bag ① by loop ②.

▶ Open the safety vest bag ① and pull out the safety vest.

▶ Replace: Fold up the safety vest, roll it up and place it in the safety vest ①.

▶ Slide the safety vest bag ① along the lower edge of the armrest into the safety vest compartment. Ensure that the loop ② hangs out so that it is easy to reach.

ⓘ Remove the packaging film before sliding it into the safety vest compartment for a new safety vest. Otherwise, it may cause unintentional slipping or make removing difficult. Observe the legal requirements in the individual countries.

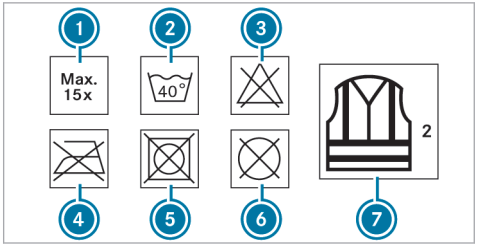

① Maximum number of washes
② Maximum wash temperature
③ Do not bleach
④ Do not iron
⑤ Do not tumble dry
⑥ Do not dry clean
⑦ Class 2 safety vest

The requirements defined by the legal standard are only fulfilled if the safety vest is the correct size and is fully closed.

Replace the safety vest in the following cases:

- The reflective strips are damaged or dirty

- The maximum permissible number of washes is exceeded
- The fluorescence property decreases, e.g. due to permanent exposure to sunlight.

Dispose of the safety vest in an environmentally friendly way:

- Please contact your local waste disposal company.

Warning triangle

Removing the warning triangle

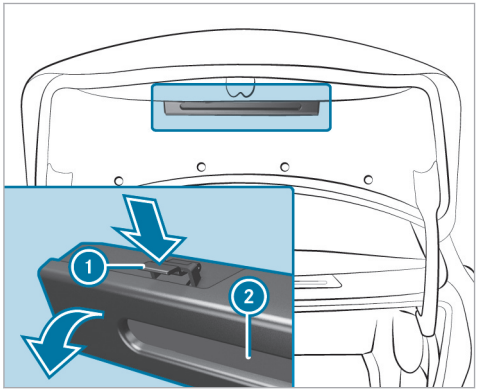

▶ Push both sides of warning triangle holder ① in the direction of the arrow and open it.

▶ Remove warning triangle ②.

Setting up the warning triangle

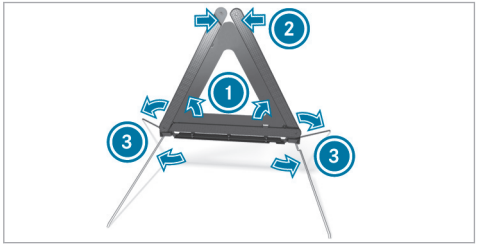

▶ Fold side reflectors ① upwards to form a triangle and attach at the top using upper press-stud ②.

▶ Fold legs ③ down and out to the side.

First-aid kit (soft-sided) overview

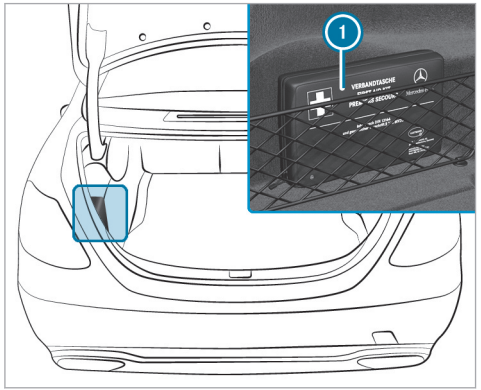

First-aid kit (soft-sided) (1) is located in the stowage net on the left-hand side of the boot.

Depending on the vehicle version, the first-aid kit (soft-sided) (1) may be located in other positions in the boot.

Removing the fire extinguisher

WARNING Risk of accident due to an incorrectly secured fire extinguisher in the driver's footwell

A fire extinguisher may impede pedal travel or block a depressed pedal.

This jeopardises the operating and road safety of the vehicle.

The fire extinguisher can be flung around and injure the driver or other vehicle occupants.

- Always store and secure the fire extinguisher in the bracket.
- Do not remove the fire extinguisher while driving.

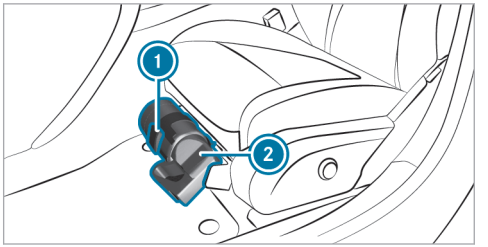

- **Left-hand drive vehicle:** pull tab (1) upwards.
- **Right-hand drive vehicle:** pull tab (1) downwards.
- Remove fire extinguisher (2).

Flat tyre

Notes on flat tyres

WARNING Risk of accident due to a flat tyre

A flat tyre severely affects the driving characteristics as well as steering and braking.

tyres that do not feature run-flat characteristics:

▶ Do not drive on with a flat tyre.

▶ Change the flat tyre immediately with an emergency spare wheel or spare wheel. Alternatively, consult a qualified specialist workshop.

Run-flat tyres:

▶ Observe the information and warning notes on MOExtended tyres (run-flat tyres).

In the event of a flat tyre, the following options are available depending on your vehicle's equipment:

- **Vehicles with MOExtended tyres:** it is possible to continue the journey for a short period of time. Make sure you observe the notes on MOExtended tyres (run-flat tyres) (→ page 575).
- **Vehicles with a TIREFIT kit:** you can seal the tyre so that it is possible to continue the journey for a short period of time. To do this, use the TIREFIT kit (→ page 577).
- (→ page 514)**Vehicles with Mercedes me connect:** you can make a call for breakdown assistance via the overhead control panel in the case of a breakdown .
- **All vehicles:** change the wheel (→ page 608).

ⓘ (→ page 613)The emergency spare wheel is only available in certain countries.

Notes on MOExtended tyres (run-flat tyres)

⚠ **WARNING** Risk of accident when driving in limp-home mode

Driving in emergency mode impairs the handling characteristics of the vehicle.

▶ Do not exceed the permissible maximum speed of the MOExtended tyres.

▶ Avoid any abrupt steering and driving manoeuvres as well as driving over obstacles (kerbs, pot holes, off-road). This applies, in particular, to a loaded vehicle.

▶ Stop driving in the emergency mode if you notice:

- banging noise
- vehicle vibration
- smoke which smells like rubber
- continuous ESP® intervention
- cracks in the tyre sidewalls

▶ After driving in emergency mode, have the rims checked by a qualified specialist workshop with regard to their further use.

▶ The defective tyre must be replaced in every case.

With MOExtended tyres (run-flat tyres), you can continue to drive your vehicle even if there is a total loss of pressure in one or more tyres. However, the tyre affected must not show any clearly visible damage.

You can recognise MOExtended tyres by the MOExtended marking which appears on the side wall of the tyre.

Vehicles with tyre pressure loss warning system: MOExtended tyres may only be used in conjunction with an activated tyre pressure loss warning system.

Vehicles with tyre pressure monitoring system: MOExtended tyres may only be used in conjunction with an activated tyre pressure monitoring system.

If a pressure loss warning message appears in the driver's display, proceed as follows:

- Check the tyre for damage.
- If driving on, observe the following notes.

Driving distance possible in emergency mode after the pressure loss warning:

Load condition	Driving distance possible in emergency mode
Partially laden	80 km
Fully laden	30 km

The driving distance possible in emergency mode may vary depending on the driving style. Observe the maximum permissible speed of 80 km/h.

If a tyre has gone flat and cannot be replaced with an MOExtended tyre, you can use a standard tyre as a temporary measure.

TIREFIT kit storage location

The TIREFIT kit is located under the boot floor.

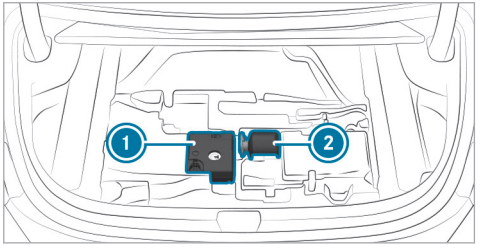

1. Tyre sealant bottle
2. Tyre inflation compressor

The TIREFIT kit may be located in other positions under the boot floor depending on the vehicle version.

ⓘ You can find information on the power category (LK) and/or electrical data on the back of the tyre inflation compressor:

- LK2 – 12 V/15 A, 180 W, 0.8 kg

At a distance of approximately 1 m to the tyre inflation compressor and approximately 1.6 m above the ground, the following sound pressure levels apply:

- Emission sound pressure level L_{PA} 83 dB (A)
- Sound power level L_{WA} 91 dB (A)

The tyre inflation compressor is maintenance-free. If there is a malfunction, please contact a qualified specialist workshop.

Using the TIREFIT kit

Requirements

- Tyre sealant bottle and tyre inflation compressor are ready for use (→ page 54).
- TIREFIT sticker is displayed.
- Gloves are at hand.

You can use TIREFIT tyre sealant to seal perforation damage of up to 4 mm, particularly those in the tyre contact surface. You can use TIREFIT in outside temperatures down to -20 °C.

WARNING Risk of accident when using tyre sealant

The tyre sealant may be unable to seal the tyre properly, especially in the following cases:

- there are large cuts or punctures in the tyre (larger than damage previously mentioned)
- the wheel rims have been damaged
- after journeys with very low tyre pressure or with flat tyres

▶ Do not continue driving.

▶ Consult a qualified specialist workshop.

WARNING Risk of injury and poisoning from tyre sealant

Tyre sealant is hazardous to health and causes irritation. Do not allow it to come into contact with your skin, eyes or clothing, and do not swallow it. Do not inhale any vapours. Keep the tyre sealant away from children.

Observe the following if you come into contact with the tyre sealant:

▶ Rinse off the tyre sealant from your skin using water immediately.

▶ If tyre sealant gets into your eyes, thoroughly rinse them using clean water immediately.

▶ If tyre sealant has been swallowed, thoroughly rinse out your mouth immediately and drink plenty of water. Do not induce vomiting and seek medical attention immediately.

▶ Change out of clothing which has come into contact with tyre sealant immediately.

▶ If an allergic reaction occurs, seek medical attention immediately.

NOTE Overheating due to the tyre inflation compressor running too long

▶ Do not run the tyre inflation compressor for longer than ten minutes without interruption.

Observe the manufacturer's safety notes on the sticker on the tyre sealant bottle.

Have the tyre sealant bottle replaced at a qualified specialist workshop every five years.

▶ Do not remove any foreign objects which have pierced the tyre.

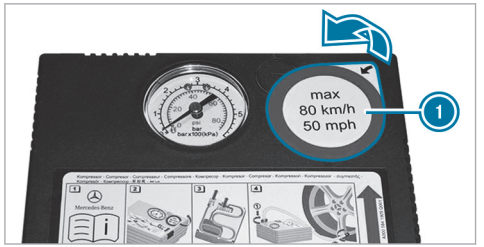

▶ Remove the sticker 1 from the tyre inflation compressor housing and affix it to the instrument cluster within the driver's field of vision.

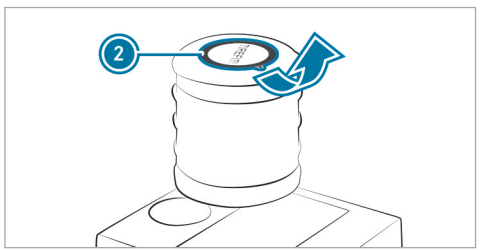

▶ Remove the sticker 2 from the tyre sealant bottle and affix it near the valve on the wheel with the defective tyre.

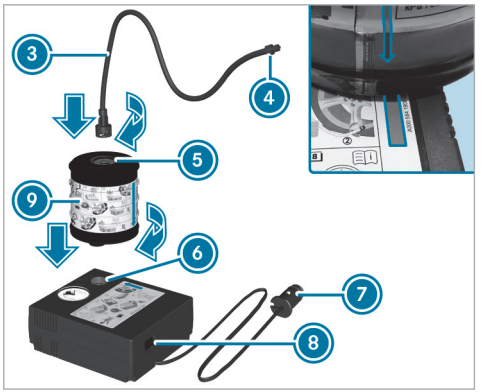

▶ Pull the plug 7 with cable and filling hose 3 out of the tyre inflation compressor housing.

▶ Insert the tyre sealant bottle 9 into the socket 6 of the tyre inflation compressor so that the red arrow on tyre sealant bottle 9 aligns with the red arrow on the tyre inflation compressor.

▶ Rotate the tyre sealant bottle 9 clockwise for a quarter of a turn.

▶ Insert the plug of the filling hose 3 into the socket 5 of the tyre sealant bottle 9.

▶ Rotate the filling hose 3 clockwise for a quarter of a turn.

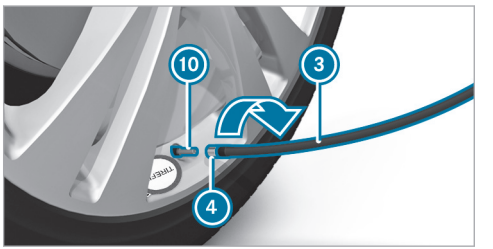

▶ Remove the valve cap from the valve 10 on the faulty tyre.

▶ Screw the union nut 4 of the filling hose 3 onto the valve 10.

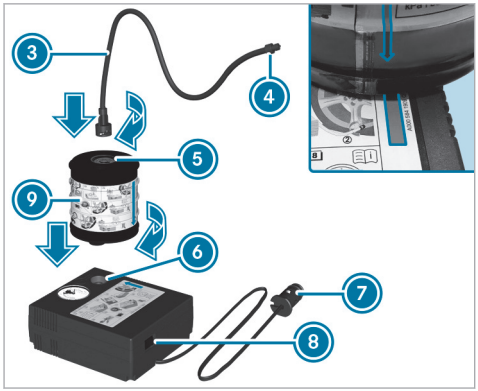

- Insert the plug ⑦ into a 12-V- socket in your vehicle.
- Turn the key to position [1] in the ignition lock.
- Press the on and off switch ⑧ on the tyre inflation compressor.
  The tyre inflation compressor is switched on. The tyre is inflated. First, tyre sealant is pumped into the tyre. The pressure may briefly rise to approximately 500 kPa (5 bar/73 psi).

Do not switch off the tyre inflation compressor during this phase!

- Allow the tyre inflation compressor to run for a maximum ten minutes.
  The tyre should then have attained a tyre pressure of at least 200 kPa (2.0 bar/29 psi).

If tyre sealant leaks out, make sure you clean the affected area as quickly as possible. It is preferable to use clean water.

If you get tyre sealant on your clothing, have it cleaned as soon as possible with perchloroethylene.

If, after ten minutes, a tyre pressure of 200 kPa (2.0 bar/29 psi) has not been attained:

- Switch off the tyre inflation compressor.
- Unscrew the filling hose from the valve of the defective tyre.

Please note that tyre sealant may leak out when unscrewing the filling hose.

- Drive the vehicle forwards or in reverse very slowly for approximately 10 m.
- Pump up the tyre again.
  After a maximum ten minutes, the tyre pressure must be at least 200 kPa (2.0 bar/29 psi).

⚠ WARNING Risk of accident due to the specified tyre pressure not being attained

If the specified tyre pressure is not attained after the specified time, the tyre is too badly damaged. The tyre sealant cannot repair the tyre in this instance.

The braking and driving characteristics may be greatly impaired.

- Do not continue driving.
- Consult a qualified specialist workshop.

! NOTE Staining from leaking tyre sealant

After use, excess tyre sealant may leak out from the filling hose.

- Therefore, place the filling hose in the plastic bag that contained the TIREFIT kit.

If, after ten minutes, a tyre pressure of 200 kPa (2.0 bar/29 psi) has been attained:

- Switch off the tyre inflation compressor.
- Unscrew the filling hose from the valve of the defective tyre.

Please note that tyre sealant may leak out when unscrewing the filling hose.

WARNING Risk of accident from driving with sealed tyres

A tyre temporarily sealed with tyre sealant impairs the handling characteristics and is not suitable for higher speeds.

- Adapt your driving style accordingly and drive carefully.
- Do not exceed the maximum speed limit with a tyre that has been repaired using tyre sealant.

- Observe the maximum permissible speed of 80 km/h for a tyre sealed with tyre sealant.
- The sticker with details of the maximum permissible speed must be affixed to the instrument cluster where it can be easily seen by the driver.

NOTE Staining from leaking tyre sealant

After use, excess tyre sealant may leak out from the filling hose.

- Therefore, place the filling hose in the plastic bag that contained the TIREFIT kit.

ENVIRONMENTAL NOTE Environmental pollution caused by environmentally irresponsible disposal

Tyre sealant contains pollutants.

- Have the tyre sealant bottle disposed of professionally, e.g. at a Mercedes-Benz Service Centre.

- Stow the tyre sealant bottle, the tyre inflation compressor and the warning triangle.
- Pull away immediately.
- Stop driving after approximately ten minutes and check the tyre pressure using the tyre inflation compressor.
  The tyre pressure must now be at least 130 kPa (1.3 bar/19 psi).

WARNING Risk of accident due to the specified tyre pressure not being attained

If the specified tyre pressure is not reached, the tyre is too badly damaged. The tyre sealant cannot repair the tyre in this instance.

The braking and driving characteristics may be greatly impaired.

- Do not continue driving.
- Consult a qualified specialist workshop.

Countries that have Mercedes-Benz Service24h: you will find a sticker with the telephone number, e.g. on the B-pillar on the driver's side.

- Correct the tyre pressure if it is still at least 130 kPa (1.3 bar/19 psi). Refer to the tyre pressure table on the fuel filler flap for values.

Increasing the tyre pressure

- Switch on the tyre inflation compressor.

Decreasing the tyre pressure

- Remove the tyre sealant bottle from the tyre inflation compressor.
- Insert the filling hose into the socket of the tyre inflation compressor and rotate it clockwise a quarter of a turn.

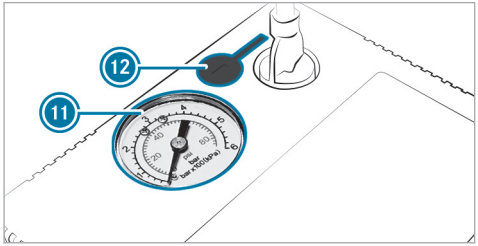

- Press the pressure release button (12) next to the manometer (11).

When the tyre pressure is correct

- Unscrew the filling hose from the valve of the sealed tyre.
- Screw the valve cap onto the valve of the sealed tyre.
- Stow the tyre sealant bottle and the tyre inflation compressor.
- Drive to the nearest qualified specialist workshop and have the tyre, tyre sealant bottle and filling hose replaced.

Battery (vehicle)

Notes on the 12 V battery

WARNING Risk of explosion due to electrostatic charge

Electrostatic charge can ignite the highly explosive gas mixture in the battery.

- To discharge any electrostatic charge that may have built up, touch the metal vehicle body before handling the battery.

The highly flammable gas mixture is created while the battery is charging and during starting assistance.

For safety reasons, Mercedes-Benz recommends that you only use batteries which have been tested and approved for your vehicle by Mercedes-Benz.

WARNING Danger of chemical burns from the battery acid

Battery acid is caustic.

- Avoid contact with the skin, eyes or clothing.
- Do not lean over the battery.
- Do not inhale battery gases.
- Keep children away from the battery.
- Immediately rinse battery acid off thoroughly with plenty of clean water and seek medical attention immediately.

ENVIRONMENTAL NOTE Environmental damage due to improper disposal of batteries

Batteries contain pollutants. It is illegal to dispose of them with the household rubbish.

▶ Dispose of batteries in an environmentally responsible manner. Take discharged batteries to a qualified specialist workshop or to a collection point for used batteries.

If you have to disconnect the 12 V battery, contact a qualified specialist workshop.

Comply with safety notes and take protective measures when handling batteries.

Risk of explosion.

Fire, naked flames and smoking are prohibited when handling the battery. Avoid creating sparks.

Electrolyte or battery acid is corrosive. Avoid contact with the skin, eyes or clothing. Wear suitable protective clothing, in particular gloves, an apron and a face mask. Immediately rinse electrolyte or acid splashes off with clean water. Consult a doctor immediately.

Wear safety glasses.

Keep children away.

Observe this Owner's Manual.

If you do not intend to use the vehicle over an extended period of time:

- Activate standby mode.
- Connect the battery to a battery charger approved by Mercedes-Benz.
- Consult a qualified specialist workshop to disconnect the battery.

Notes on the 48 V battery

WARNING Risk of an accident due to work carried out incorrectly on the battery

Work carried out incorrectly on the battery can, for example, lead to a short circuit. This can restrict functions relevant for safety systems and impair the operating safety of your vehicle.

You could lose control of the vehicle in the following situations in particular:

- when braking
- in the event of abrupt steering manoeuvres and/or when the vehicle's speed is not adapted to the road conditions

▶ In the event of a short circuit or a similar incident, contact a qualified specialist workshop immediately.

▶ Do not drive on.

▶ Always have work on the battery carried out at a qualified specialist workshop.

- Further information on ABS (→ page 305)
- Further information on ESP®(→ page 305)

ENVIRONMENTAL NOTE Environmental damage due to improper disposal of batteries

Batteries contain pollutants. It is illegal to dispose of them with the household rubbish.

▶ **Li-ion** Dispose of batteries in an environmentally responsible manner. Take discharged batteries to a qualified specialist workshop or to a collection point for used batteries.

Only have work on the 48 V battery carried out at a qualified specialist workshop.

Comply with safety notes and take protective measures when handling batteries.

Risk of explosion if the 48 V battery is used improperly.

The surface of the 48 V battery may be hot.

Fire, naked flames and smoking are prohibited when handling the battery. Avoid creating sparks.

Electrolyte or battery acid is corrosive. Avoid contact with the skin, eyes or clothing. Wear suitable protective clothing, in particular gloves, an apron and a face mask. Immediately rinse off splashes of electrolyte or acid with plenty of clean water. Consult a doctor immediately.

Do not place heavy objects on the surface of the battery or use the battery to support a person in any way.

Do not perform any work on the battery. Always have any work on the battery carried out at a qualified specialist workshop. Do not disconnect the battery yourself.

Do not remove the battery yourself. Do not attempt to open the battery.

Keep children away.

Wear safety glasses.

Observe this Owner's Manual.

Observe the following if you do not intend to use the vehicle over an extended period of time:

- **If available:** activate standby mode (→ page 302).

Notes on the high-voltage battery

DANGER Risk of fire and explosion from excessive internal pressure of the high-voltage battery

In the event of a vehicle fire, flammable gas can escape and ignite.

- ▶ Stop the charging process immediately in case of unusual odours, smoke or burn marks.
- ▶ Leave the danger zone immediately. Secure the danger zone at a sufficient distance.
- ▶ Call the fire service.

Observe the notes on charging the high-voltage battery (→ page 273).

Risk of explosion.

Fire, naked flames and smoking are prohibited when handling the battery. Avoid creating sparks.

Electrolyte or battery acid is corrosive. Avoid contact with the skin, eyes or clothing. Wear suitable protective clothing, in particular gloves, an apron and a face mask. Immediately rinse electrolyte or acid splashes off with clean water. Consult a doctor immediately.

Wear safety glasses.

Keep children away.

Observe this Owner's Manual.

Notes on starting assistance and charging the 12 V battery

Always use the jump-start connection point in the engine compartment for battery charging and starting assistance.

! NOTE Damage to the battery due to overvoltage

When charging using a battery charger without a maximum charging voltage, the battery or the on-board electronics may be damaged.

- ▶ Only use battery chargers with a maximum charging voltage of 14.8 V.

⚠ WARNING Risk of explosion due to the ignition of hydrogen gas

If there is a short circuit or sparks are created, there is a danger of hydrogen gas igniting when you charge the battery.

- ▶ Take care that the positive terminal of a connected battery does not come into contact with vehicle parts.
- ▶ Never place metal objects or tools on a battery.
- ▶ When connecting and disconnecting the battery, always observe the sequence of battery terminals described.
- ▶ During starting assistance, always take care to connect only battery terminals of identical polarity.
- ▶ During starting assistance, observe the sequence described for connecting and disconnecting the jump leads.
- ▶ Do not connect or disconnect the battery terminals with the engine running.

WARNING Risk of explosion due to explosive mixture of gases

An explosive mixture of gases can escape from the battery during charging and starting assistance.

- Fire, naked flames, smoking and creating sparks must be avoided.
- Make sure there is adequate ventilation.
- Do not stand over the battery.

WARNING Risk of explosion from a frozen battery

A discharged battery may freeze at temperatures slightly above or below freezing point.

During starting assistance or battery charging, battery gas can be released.

- Always allow a battery to thaw before charging it or performing starting assistance.

If the indicator/warning lamps in the instrument display do not light up in cold temperatures, the discharged battery is very probably frozen. In this case you must neither charge the battery nor jump-start the vehicle.

The operating life of a thawed battery may be drastically shortened. The starting behaviour may deteriorate, especially in low temperatures.

It is recommended that a thawed battery be checked in a qualified specialist workshop.

NOTE Damage caused by numerous or extended attempts to start the engine

Numerous or extended attempts to start the engine may damage the catalytic converter due to non-combusted fuel.

- Avoid numerous and extended attempts to start the engine.

Observe the following points during starting assistance and battery charging:

- Only use undamaged jump leads/charging cables with a sufficient cross-section and insulated terminal clamps.
- Uninsulated parts of the terminal clamps must not come into contact with other metal parts while the jump leads/charging cables are connected to the battery/jump-start connection point.
- The jump leads/charging cables must not touch any parts that can move when the engine is running.
- Always make sure that neither you nor the battery are electrostatically charged.
- Be absolutely sure to keep away from fire and naked flames.
- Do not lean over a battery.

Observe the following additional points when charging the battery:

- Only use chargers that have been tested and approved by Mercedes-Benz.
- Read the operating instructions for the charger before charging the battery.

Observe the additional following points during starting assistance:

- For starting assistance, only use batteries with a nominal voltage of 12 V.
- The vehicles must not touch each other.

- **Petrol engine:** only receive starting assistance when the engine is cold and the exhaust system has cooled.

Starting assistance and charging the 12 V battery

Starting assistance/preparation for charging

Plug-in hybrid: to be started, the vehicle requires an adequate state of charge in the high-voltage battery and sufficient power in the 12 V onboard electrical system.

- ▶ Secure the vehicle with the electric parking brake.
- ▶ Shift the transmission to position P.
- ▶ Switch the vehicle and all electrical consumers off.
- ▶ Open the bonnet.

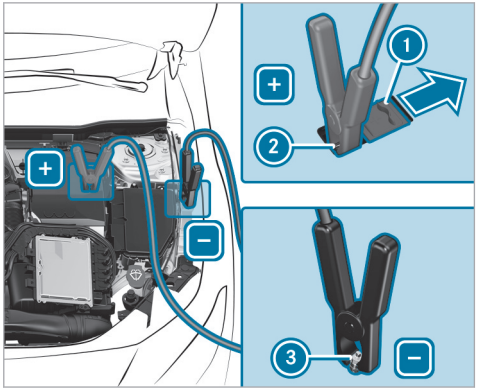

- ▶ Slide the cover ① of the positive terminal ② on the jump-start connection point in the direction of the arrow.

Starting assistance

- ▶ Connect the jump lead to the positive terminal of your vehicle.
- ▶ Connect the jump lead to the positive terminal of the donor battery.
- ▶ Run the engine of the assisting vehicle at idling speed.
- ▶ Connect the jump lead to the negative terminal of the donor battery.
- ▶ Connect the jump lead to the earth point ③ of your vehicle.
- ▶ Start the engine of your vehicle.
- ▶ Let the engine run for a few minutes.
- ▶ Before disconnecting the jump leads, switch on an electrical consumer in your vehicle, e.g. the rear window heating or lights.

When the starting assistance has been completed:

- ▶ Disconnect the jump lead from the earth point ③ of your vehicle.
- ▶ Disconnect the jump lead from the negative terminal of the donor battery.
- ▶ Disconnect the jump lead from the positive terminal of your own vehicle.
- ▶ Disconnect the jump lead from the positive terminal of the donor battery.

- ▶ After removing the jump leads, close the cover ① of the positive terminal ②.

Plug-in hybrid: if the vehicle has been jump-started, the electric drive system may not be available for around 30 minutes.

Further information can be obtained at a qualified specialist workshop.

Charging the 12 V battery

- ▶ Connect the charging cable to the positive terminal of your vehicle.
- ▶ Connect the charging cable to the positive terminal of the charger.
- ▶ Connect the charging cable to the negative terminal of the charger.
- ▶ Connect the charging cable to the earth point ③ of your vehicle.
- ▶ Start the charging procedure.

When the charging procedure has been completed:

- ▶ Disconnect the charging cable from the earth point ③ of your vehicle.
- ▶ Disconnect the charging cable from the negative terminal of the charger.
- ▶ Disconnect the charging cable from the positive terminal of your vehicle.
- ▶ Disconnect the charging cable from the positive terminal of the charger.
- ▶ After removing the charging cables, close the cover ① of the positive terminal ②.

Replacing the 12 V battery

- ▶ Observe the notes on the 12 V battery (→ page 581).

Mercedes-Benz recommends that you have the 12 V battery replaced at a qualified specialist workshop, e.g. at a Mercedes-Benz Service Centre.

Observe the following notes if you want to replace the battery yourself:

- Always replace a faulty battery with a battery which meets the specific vehicle requirements.

  The vehicle is equipped with a fleece battery. Full vehicle functionality is only guaranteed with a fleece battery. For safety reasons, Mercedes-Benz recommends that you only use batteries which have been tested and approved for your vehicle by Mercedes-Benz.
- Use detachable parts such as vent hoses, elbow fittings or terminal covers from the battery which is to be replaced.
- Make sure that the vent hose is always connected to the original opening on the side of the battery.

  Fit any existing or supplied cell caps.

  Otherwise, gases or battery acid could escape.
- Make sure that detachable parts are reconnected in the same way.

Tow-starting or towing away

Overview of permissible towing methods (not plug-in hybrid)

NOTE Damage from automatic braking

If one of the following functions is activated, the vehicle will brake automatically in certain situations:

- Active Brake Assist
- Active Distance Assist DISTRONIC
- HOLD function
- Active Parking Assist

To avoid damaging the vehicle, deactivate these systems e.g. during towing or in the car wash.

Mercedes-Benz recommends transporting your vehicle in the case of a breakdown, rather than towing it away.

For towing with both axles on the ground, use a tow rope or tow rod. Do not use tow bar systems.

WARNING Risk of accident when towing with steering wheel lock

If the steering wheel lock is engaged, you will not be able to steer the vehicle.

▶ When towing with a tow rope or tow bar, always switch on the vehicle.

NOTE Damage to the vehicle due to towing away incorrectly

▶ Observe the instructions and notes on towing away.

Permitted towing methods

Vehicle equipment/towing method	Both axles on the ground	Front axle raised	Rear axle raised
Vehicles with manual transmission	Yes, for a maximum of 50 km at 50 km/h	Yes, for a maximum of 50 km at 50 km/h	Yes, for a maximum of 50 km at 50 km/h
Vehicles with automatic transmission	Yes, for a maximum of 50 km at 50 km/h	Yes, for a maximum of 50 km at 50 km/h	Yes, for a maximum of 50 km at 50 km/h
4MATIC vehicles	Yes, for a maximum of 50 km at 50 km/h	No	No

Towing with a raised axle: towing should be performed by a towing company.

Overview of permitted towing methods (plug-in hybrid)

Mercedes-Benz recommends transporting your vehicle in the case of a breakdown, rather than towing it away.

For towing with both axles on the ground, use a tow rope or tow rod. Do not use tow bar systems.

! **NOTE** Damage to the vehicle due to towing away incorrectly

▶ Observe the instructions and notes on towing away.

Permitted towing methods

Vehicle equipment/towing method	Both axles on the ground	Front axle raised	Rear axle raised
Plug-in hybrid	Yes, for a maximum of 50 km at 50 km/h	Yes, for a maximum of 50 km at 50 km/h	Yes, for a maximum of 50 km at 50 km/h The steering wheel must be fixed in the centre position with a steering wheel lock.

In the following situations, only transporting the vehicle is permitted:

- The driver display is not working

  or
- The Towing not permitted See Owner's Manual message is shown.

Exception: If the vehicle is located in a danger zone, it can be recovered from the danger zone despite the display message or the display not working.

It must not be towed further than 50 m with both axles on the ground. A towing speed of 10 km/h must not be exceeded. Beyond these limits, only transporting is permitted.

Towing the vehicle with both axles on the ground

▶ Observe the notes on the permitted towing methods.

▶ Make sure that the battery is connected and charged.

Observe the following points when the battery is discharged:

- The vehicle cannot be started.

- The electric parking brake cannot be released or applied.
- **Vehicles with automatic transmission:** the transmission cannot be shifted to position N or P.

ⓘ **Vehicles with automatic transmission:** if the transmission cannot be shifted to position N or if the display does not show anything, transport the vehicle (→ page 592). A towing vehicle with lifting equipment is required for vehicle transportation.

! NOTE Damage due to towing away at excessively high speeds or over long distances

The drivetrain could be damaged when towing at excessively high speeds or over long distances.

▶ A towing speed of 50 km/h must not be exceeded.

▶ A towing distance of 50 km must not be exceeded.

⚠ WARNING Risk of accident when towing a vehicle which is too heavy

If the vehicle to be tow-started or towed away is heavier than the permissible gross mass of your vehicle, the following situations can occur:

- the towing eye may become detached.
- the vehicle/trailer combination may swerve or overturn.

▶ Before tow-starting or towing away, check if the vehicle to be tow-started or towed away exceeds the permissible gross mass.

If a vehicle has to be tow-started or towed away, its permissible gross mass must not exceed the permissible gross mass of the towing vehicle.

▶ Information on the permissible gross mass of the vehicle can be found on the vehicle identification plate (→ page 734).

▶ **Vehicles with automatic transmission:** do not open the driver's door or front-passenger door; the transmission otherwise automatically shifts to position P.

▶ Fit the towing eye (→ page 593).

▶ Fasten the towing device.

! NOTE Damage due to incorrect connection of the tow bar

▶ Only connect the tow rope or tow bar to the towing eyes.

▶ Deactivate the automatic locking mechanism (→ page 148).

▶ Do not activate the HOLD function.

▶ Deactivate tow-away protection (→ page 162).

▶ Deactivate Active Brake Assist (→ page 334).

▶ **Vehicles with automatic transmission:** shift to position N.

▶ Release the electric parking brake.

▶ Switch on the vehicle; the steering wheel lock may otherwise engage.

WARNING Risk of accident due to limited safety-related functions during the towing process

Safety-related functions are limited or no longer available in the following situations:

- the vehicle is switched off.
- the brake system or power steering system is malfunctioning.
- the energy supply or the on-board electrical system is malfunctioning.

When your vehicle is towed away, significantly more effort may be required to steer and brake than is normally required.

▶ Use a tow bar.

▶ Make sure that the steering wheel can move freely before towing the vehicle away.

NOTE Damage due to excessive tractive power

If you pull away sharply, the tractive power may be too high and the vehicles could be damaged.

▶ Pull away slowly and smoothly.

Loading the vehicle for transport

Plug-in hybrid: transportation of vehicles should only be carried out by professional recovery companies.

▶ Observe the notes on towing away (→ page 54).

▶ Connect the towing device to the towing eye in order to load the vehicle.

ⓘ You can also attach the tow bar to the trailer hitch.

▶ **Vehicles with automatic transmission:** shift the automatic transmission to position N.

ⓘ **Vehicles with automatic transmission:** the automatic transmission may be locked in position P in the event of damage to the electrical system. To shift to N, provide the on-board electrical system with power (→ page 50).

▶ Load the vehicle onto the transporter.

▶ **Vehicles with automatic transmission:** shift the automatic transmission to position P.

▶ Use the electric parking brake to secure the vehicle against rolling away.

▶ Only secure the vehicle by the wheels.

Vehicles with adaptive damping adjustment

WARNING Risk of an accident when transporting vehicles with adaptive damping adjustment

When transporting vehicles with adaptive damping adjustment, the vehicle/trailer combination may begin to rock and start to skid.

▶ Load the vehicle correctly onto the transporter.

▶ Secure the vehicle on all four wheels with suitable tensioning straps.

! NOTE Damage to the vehicle from securing it incorrectly

- After loading, the vehicle must be secured on all four wheels. Otherwise, the vehicle could be damaged.
- A minimum distance of 20 cm upwards and 10 cm downwards must be kept to the transport platform.

- Secure the vehicle on all four wheels after loading.

4MATIC vehicles/vehicles with automatic transmission

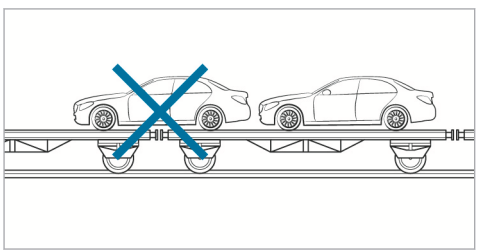

- Make sure that the front and rear axles come to rest on the same transportation vehicle.

! NOTE Damage to the drive train due to incorrect positioning of the vehicle

- Do not position the vehicle above the connection point of the transport vehicle.

Towing eye storage location

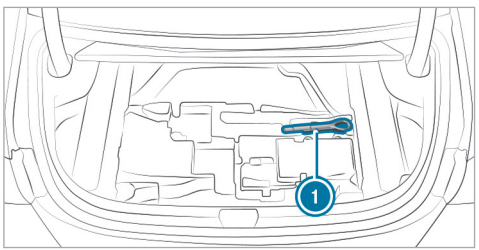

The towing eye (1) is located under the boot floor.

ⓘ Depending on the vehicle version, the towing eye is in a different position in the boot.

Fitting and removing the towing eye

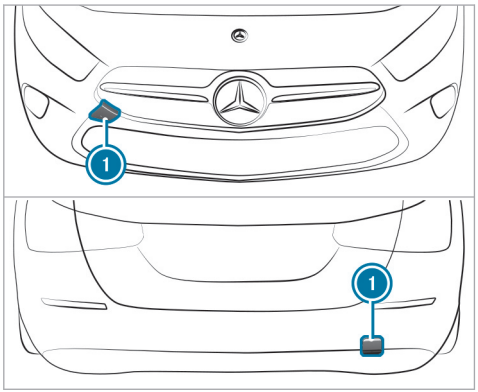

- Press the mark on the cover (1) inwards and remove.
- Screw in the towing eye clockwise as far as it will go and tighten.

Vehicles with a trailer hitch: vehicles with a trailer hitch do not have a rear bracket for the towing eye. Fasten the tow bar to the trailer hitch.

▶ After removing the towing eye, engage the cover ① in the bumper.

! NOTE Damage to the vehicle due to incorrect use of the towing eye or trailer hitch

When a towing eye or trailer hitch is used to recover a vehicle, the vehicle may be damaged in the process.

▶ Only use the towing eye or trailer hitch to tow away or tow start the vehicle.

▶ Do not use the towing eye or trailer hitch to tow the vehicle during recovery.

Tow-starting the vehicle

Vehicles with automatic transmission

! NOTE Damage to the automatic transmission due to tow-starting

The automatic transmission may be damaged in the process of tow-starting vehicles with automatic transmission.

▶ Vehicles with automatic transmission must not be tow-started.

▶ Vehicles with an automatic transmission must not be tow-started.

Electrical fuses

Notes on electrical fuses

⚠ WARNING Risk of accident and injury due to overloaded lines

If you manipulate or bridge a faulty fuse or if you replace it with a fuse with a higher amperage, the electric line could be overloaded. This could result in a fire.

▶ Always replace faulty fuses with specified new fuses containing the correct amperage.

! NOTE Damage due to incorrect fuses

Using incorrect fuses can result in damage to electrical components or systems or their functions being considerably restricted.

▶ Use only fuses approved for Mercedes-Benz with the respective specified fuse rating.

Blown fuses must be replaced with fuses of the same rating, which you can recognise by the colour and the label. The fuse ratings and further information to be observed can be found in the fuse assignment diagram.

Fuse assignment diagram: on the fuse box in the engine compartment (→ page 595).

NOTE Damage or malfunctions caused by moisture

Moisture may cause damage to the electrical system or cause it to malfunction.

- When the fuse box is open, make sure that no moisture can enter the fuse box.
- When closing the fuse box, make sure that the seal of the lid is positioned correctly on the fuse box.

If the newly inserted fuse also blows, have the cause traced and rectified at a qualified specialist workshop.

Ensure the following before replacing a fuse:

- The vehicle is secured against rolling away.
- All electrical consumers are switched off.
- The vehicle is switched off.

The electrical fuses are located in various fuse boxes:

- Fuse box in the engine compartment on the left-hand side of the vehicle, when viewed in the direction of travel (→ page 595)
- Fuse box in the front passenger footwell (→ page 596)
- Fuse box in the centre of the boot (→ page 597)

Opening and closing the fuse box in the engine compartment

Requirements:

- A dry cloth and a screwdriver are available.

Observe the notes on electrical fuses (→ page 52).

Open

WARNING Risk of injury from using the windscreen wipers when the bonnet is open

If the windscreen wipers start moving when the bonnet is open, you could be trapped by the wiper linkage.

- Always switch off the windscreen wipers and vehicle before opening the engine bonnet.

F177 0066 02

- Open the bonnet.

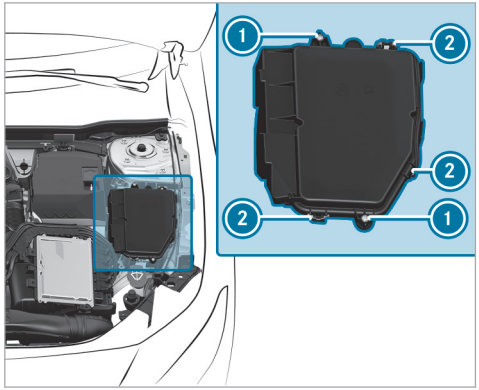

- Remove any existing moisture from the fuse box using a dry cloth.
- Loosen screws (1).
- Press clamps (2) and lift the fuse box lid up and out.

The fuse assignment diagram is in a recess on the side of the fuse box.

Closing

- Check whether the seal is positioned correctly in the lid.

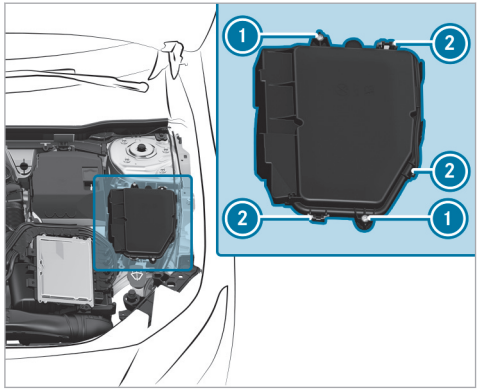

- Place the lid on the fuse box.
- Make sure that clamps (2) engage.
- Tighten screws (1).
- Close the bonnet.

Opening and closing the fuse box in the front passenger footwell

Requirements

Observe the notes on electrical fuses (→ page 52).

Opening

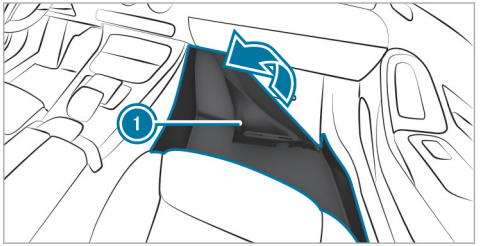

- Lift carpet (1) in the direction of the arrow.

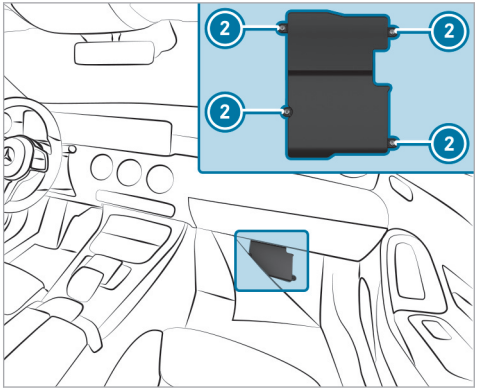

- Loosen screws (2) and remove the fuse box lid from the top.

Closing

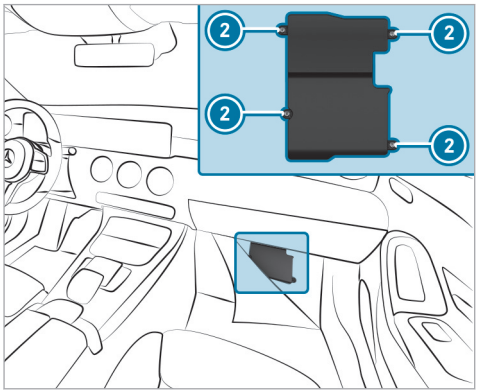

- Place the lid on the fuse box.
- Tighten screws (2).
- Fold back the carpet.

Opening and closing the fuse box in the boot

Requirements

Observe the notes on electrical fuses (→ page 52).

- Open the boot floor (→ page 39).

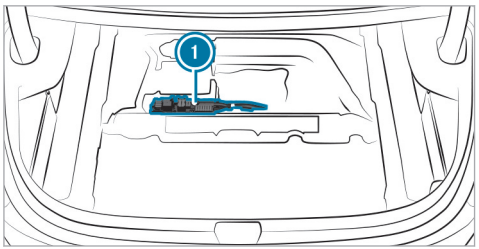

Fuse box (1) is located in the centre underneath the boot floor.

Depending on the vehicle version, the fuse box may be in a different position under the boot floor.

Notes on noise or unusual handling characteristics

Make sure there are no vibrations, noises or unusual handling characteristics when the vehicle is in motion. This may indicate that the wheels or tyres are damaged. Hidden tyre damage could also be causing the unusual handling characteristics.

If you suspect that a tyre is defective, reduce your speed immediately and have the tyres and wheels checked at a qualified specialist workshop.

Notes on regularly inspecting wheels and tyres

WARNING Risk of injury due to damaged tyres

Damaged tyres can cause tyre pressure loss.

▶ Check the tyres regularly for signs of damage and replace any damaged tyres immediately.

WARNING Risk of aquaplaning due to insufficient tyre tread

Insufficient tyre tread will result in reduced tyre grip.

The risk of aquaplaning is increased on wet roads, especially when the speed of the vehicle is not adapted to suit the conditions.

▶ Thus, you should regularly check the tread depth and the condition of the tread across the entire width of all tyres.

Minimum tread depth for:

- Summer tyres: 3 mm
- M+S tyres: 4 mm

▶ For safety reasons, replace the tyres before the legally-prescribed limit for the minimum tread depth is reached.

Carry out the following checks on all wheels regularly, at least once a month or as required, for example, prior to a long journey or driving off-road:

- Check the tyre pressure (→ page 599).
- Visually inspect wheels and tyres for damage.
- Check the valve caps.
- Visual check of the tyre tread depth and the tyre contact surface across the entire width.

  The minimum tread depth for summer tyres is 3 mm and for winter tyres 4 mm.

Notes on snow chains

WARNING Risk of accident due to incorrectly fitted snow chains

If you have fitted snow chains to the rear wheels, they may drag against the vehicle body or chassis components.

▶ Never fit snow chains on the rear wheels.

▶ Only fit snow chains on the front wheels in pairs.

NOTE Damage to vehicle body or suspension components caused by fitted snow chains

On 4MATIC vehicles, if you fit snow chains on the rear wheels, you can damage vehicle body or suspension components.

▶ On 4MATIC vehicles, only fit snow chains on the front wheels.

Observe the following notes when using snow chains:

- Snow chains are only permissible for certain wheel/tyre combinations. You can obtain information about this from a Mercedes-Benz Service Centre.
- For safety reasons, only use snow chains that have been specifically approved for your vehicle by Mercedes-Benz, or snow chains with the same quality standard.
- If snow chains are fitted, the maximum permissible speed is 50 km/h.
- **Vehicles with Active Parking Assist:** do not use Active Parking Assist when snow chains are fitted.

ⓘ You can permanently limit the maximum speed for driving with winter tyres (→ page 318).

ⓘ You can deactivate ESP® to pull away (→ page 309). This allows the wheels to spin, achieving an increased driving force.

Tyre pressure

Notes on tyre pressure

WARNING Risk of accident due to insufficient or excessive tyre pressure

Underinflated or overinflated tyres pose in particular the following risks:

- The tyres can burst.
- The tyres can wear excessively and/or unevenly.
- The driving characteristics as well as the steering and braking characteristics may be greatly impaired.

▶ Comply with the recommended tyre pressure and check the tyre pressure of all tyres, including the spare wheel, regularly:

- monthly
- when the load changes
- before embarking on a longer journey
- if operating conditions change, e.g. off-road driving

▶ Adjust the tyre pressure, if necessary.

Tyre pressure which is too high or too low can:

- Shorten the service life of the tyres.
- Cause increased tyre damage.
- Adversely affect driving characteristics and thus driving safety, e.g. due to aquaplaning.

WARNING Risk of accident due to repeated pressure drop in the tyres

The wheels, valves or tyres could be damaged.

Too low a tyre pressure can lead to the tyres bursting.

- ▶ Examine the tyres for foreign objects.
- ▶ Check whether the tyre has a puncture or the valve has a leak.
- ▶ If you are unable to rectify the damage, contact a qualified specialist workshop.

Information on the recommended tyre pressure for the vehicle's factory-fitted tyres can be found on the tyre pressure table on the inside of the fuel filler flap (→ page 600).

Use a suitable pressure gauge to check the tyre pressure. The outer appearance of a tyre does not permit any reliable conclusion about the tyre pressure.

Only correct tyre pressures when the tyres are cold. Conditions for cold tyres:

- The vehicle has been parked with the tyres out of direct sunlight for at least three hours.
- The vehicle has travelled less than 1.6 km.

The vehicle's tyres heat up when driving. As the temperature of the tyres increases, so too does the tyre pressure.

Vehicles with a tyre pressure monitoring system: you can also see the tyre pressure in the driver's display (→ page 601).

Notes on trailer operation
Always inflate the rear axle tyres to the recommended tyre pressures on the tyre pressure table for increased load.

Tyre pressure table

The tyre pressure table is on the inside of the fuel filler flap.

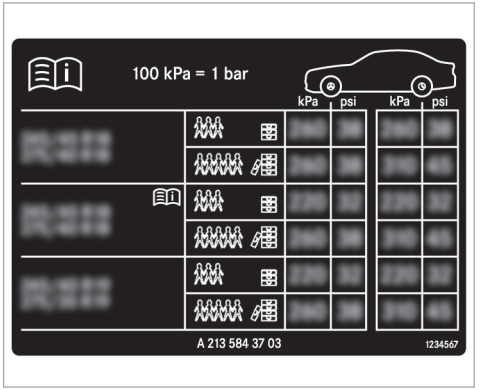

The tyre pressure table shows the recommended tyre pressure for all tyres approved for this vehicle. The recommended tyre pressures apply for cold tyres under various operating conditions, i.e. loading and/or speed of the vehicle.

If one or more tyre sizes precede a tyre pressure, the following tyre pressure information is only valid for those tyre sizes and their respective load condition.

If the preceding tyre sizes are complemented by the [ ] symbol, the tyre pressure information following shows alternative tyre pressures. Fuel consumption may then increase slightly.

The load conditions "partially laden" and "fully laden" are defined in the table for different numbers of passengers and amounts of luggage. The actual number of seats may differ from this.

Tyre pressure monitoring system

Function of the tyre pressure monitoring system

The system checks the tyre pressure and the tyre temperature of the tyres fitted to the vehicle by means of a tyre pressure sensor.

The tyre pressure and the tyre temperature appear in the driver's display.

If there is a substantial pressure loss or if the tyre temperature is excessive, you will be warned with display messages (→ page 828) or the [ ] warning lamp in the driver's display (→ page 857).

The tyre pressure monitoring system is only an aid. It is the driver's responsibility to set the tyre pressure to the recommended cold tyre pressure suitable for the operating situation.

In most cases, the tyre pressure monitoring system will automatically update the new reference values after you have changed the tyre pressure. You can, however, also update the reference values by restarting the tyre pressure monitoring system manually (→ page 602).

System limits

The system may be impaired or may not function particularly in the following situations:

- incorrect reference values were taught in
- sudden pressure loss caused by a foreign object penetrating the tyre, for example
- there is a malfunction caused by another radio signal source

Checking the tyre pressure with the tyre pressure monitoring system

Requirements

- The vehicle is switched on.

F177 0066 02

Driver display:

→ [ ] » Service

▶ Press [OK] to confirm.

One of the following displays appears:

- Current tyre pressure of each wheel:

- Tyre pressures will be displayed after a few minutes of driving: current values are not yet known to the system. The pressure/temperature values of each tyre are displayed as soon as they are known to the system.
- Tyre pressure monitor active: the teach-in process of the system is not yet complete. The tyre pressures are already being monitored.

▶ Compare the current tyre pressure with the recommended tyre pressure for the current operating condition (→ page 600). Additionally, observe the notes on cold tyres (→ page 599).

ⓘ The values displayed in the driver display may deviate from those of the tyre pressure gauge as they refer to sea level. At high elevations, the tyre pressure values indicated by a pressure gauge are higher than those shown by the driver display.

Restarting the tyre pressure monitoring system

Requirements

- The recommended tyre pressure is correctly set for the respective operating condition on each of the four wheels (→ page 599).

Restart the tyre pressure monitoring system in the following situations:

- The tyre pressure has changed.
- The wheels or tyres have been changed or newly fitted.

Driver's display:

→ [⌂] ▸▸ Service

▶ Select Tyre pressure and confirm with [OK].

▶ Swipe downwards on Touch Control on the steering wheel.
The Use current tyre pressures as new reference values? message is shown in the driver's display.

▶ Select Yes and confirm the restart with [OK].
The Tyre pressure monitor restarted message is shown in the driver's display.

Current warning messages are deleted and the [(!)] yellow warning lamp goes out.

After you have driven for a few minutes, the system checks whether the current tyre pressures are within the specified range. The current tyre pressures are then accepted as reference values and monitored.

If the tyre pressure levels are not within the specified range, the Please correct tyre pressure message appears.

Tyre pressure loss warning system

Function of the tyre pressure loss warning system

The tyre pressure loss warning system warns the driver by means of display messages when there is a severe tyre pressure loss.

System limits

The system may be impaired or may not function particularly in the following situations:

- incorrect reference values were taught in
- sudden pressure loss caused by a foreign object penetrating the tyre, for example
- an even pressure loss on more than one tyre occurs

The system has a restricted or delayed function particularly in the following situations:

- poor ground conditions, e.g. snow or gravel
- driving with snow chains
- when adopting a very sporty driving style with high cornering speeds or sudden acceleration
- driving with a very heavy or large trailer

- driving with a high load

The tyre pressure loss warning system is only an aid. It is the driver's responsibility to set the tyre pressure to the recommended cold tyre pressure suitable for the operating situation and to check it.

Be sure to also observe the following further related subjects:

- Notes on tyre pressure (→ page 599)
- Display messages about the tyres (→ page 828)

Restarting the tyre pressure loss warning system

Requirements

- The recommended tyre pressure is correctly set for the respective operating condition on each of the four wheels (→ page 599).

Restart the tyre pressure loss warning system in the following situations:

- The tyre pressure has changed.
- The wheels or tyres have been changed or newly fitted.

Driver's display:

→ ⌂ » Service

▶ Select Tyre pressure and confirm with OK.
The Run Flat Indicator active message appears in the driver's display.

▶ Press the steering wheel button OK to initiate the restart.
The Are the current pressure values OK? message appears in the driver's display.

▶ Select Yes.

▶ Press the steering wheel button OK to confirm the restart.
The Run Flat Indicator restarted message appears in the driver's display.

Be sure to also observe the following related subjects:

- Notes on tyre pressure (→ page 599)

Wheel change

Notes on selecting, fitting and replacing tyres

⚠ **WARNING** Risk of accident due to incorrect wheel and tyre dimensions

If wheels and tyres of the wrong size are fitted, the service brakes or components in the brake system and in the wheel suspension may be damaged.

▶ Always replace wheels and tyres with those that fulfil the specifications of the original part.

For wheels, pay attention to the following:

- Designation
- Type

For tyres, pay attention to the following:

- Designation
- Manufacturer
- Type

WARNING Risk of injury through exceeding the specified tyre load-bearing capacity or the permissible speed rating

Exceeding the load-bearing capacity of the tyres can lead to tyre damage and could cause the tyres to explode.

- Therefore, only use tyre types and sizes approved for your vehicle model.
- Observe the tyre load-bearing capacity rating and speed rating required for your vehicle.

NOTE Vehicle and tyre damage caused by non-approved tyre types and sizes

For safety reasons, only use tyres, wheels and accessories which have been specially approved by Mercedes-Benz for your vehicle.

These tyres are specially adapted to the active safety systems, such as ABS, ESP® and 4MATIC, and marked as follows:

- MO = Mercedes-Benz Original
- MOE = Mercedes-Benz Original Extended (run-flat tyres only for certain wheels)
- MO1 = Mercedes-Benz Original (only certain AMG tyres)

Otherwise, certain properties, such as driving characteristics, vehicle noise emissions, consumption, etc. could be adversely affected. Furthermore, other tyre sizes could result in the tyres rubbing against the body and axle components when loaded. This could result in damage to the tyre or the vehicle.

Only use tyres, wheels and accessories that have been checked and recommended by Mercedes-Benz.

NOTE Risk to driving safety from retreaded tyres

Retreaded tyres are neither tested nor recommended by Mercedes-Benz, since previous damage cannot always be detected on retreaded tyres.

For this reason driving safety cannot be guaranteed.

- Do not use used tyres if you have no information about their previous usage.

NOTE Possible wheel and tyre damage when driving over obstacles

Large wheels have a smaller section width. As the section width decreases, the risk of wheels and tyres being damaged when driving over obstacles increases.

- Avoid obstacles or drive especially carefully.
- Reduce your speed when driving over kerbs, speed bumps, manhole covers and potholes.
- Avoid particularly high kerbs.

NOTE Possible wheel and tyre damage when parking on kerbs or in potholes

Parking on kerbs or in potholes can damage the wheels and tyres.

- Only park on level surfaces if possible.
- Avoid kerbs and potholes when parking.

NOTE Damage to electronic component parts due to the use of tyre-fitting tools

Vehicles with tyre pressure monitoring system: there are electronic component parts in the wheel.

If tyre-fitting tools are positioned in the area of the valve, the electronic components could be damaged.

- ▶ Tyre-fitting tools should not be applied in the area of the valve.
- ▶ Always have tyres changed at a qualified specialist workshop.

NOTE Damage to summer tyres at low ambient temperatures

At low ambient temperatures, tears could form when driving with summer tyres, causing permanent damage to the tyre.

- ▶ At temperatures below 7 °C use M+S tyres.

Accessory parts which are not approved for your vehicle by Mercedes-Benz, or which are not used correctly, can impair the operating safety.

Before purchasing and using non-approved accessories, visit a qualified specialist workshop and enquire about:

- Suitability
- Legal stipulations
- Factory recommendations

WARNING Risk of accident with sport tyres

The special tyre tread in combination with the optimised tyre compound means that the risk of skidding or aquaplaning on wet roads is increased.

In addition, the tyre grip is greatly reduced at a low outside temperature and tyre running temperature.

- ▶ Switch on the ESP® and adapt your driving style accordingly.
- ▶ Use M+S tyres at outside temperatures of less than 7 °C.
- ▶ Only use tyres suitable for the intended use.

Observe the following when selecting, fitting and replacing tyres:

- Country-specific requirements for tyre approval that define a specific tyre type for your vehicle.
- Furthermore, the use of certain tyre types in certain regions and areas of operation can be highly beneficial.
- Only use tyres and wheels of the same type (summer tyres, winter tyres, MOExtended tyres) and the same make.
- Only fit wheels of the same size on one axle (left and right).

  It is only permissible to fit a different wheel size in the event of a flat tyre in order to drive to the specialist workshop.
- Do not make any modifications to the brake system, the wheels or the tyres.

The use of shims or brake dust shields is not permitted and may invalidate the vehicle's general operating permit.

- **Vehicles with a tyre pressure monitoring system:** all fitted wheels must be equipped with functioning sensors for the tyre pressure monitoring system.
- At temperatures below 7 °C use winter tyres or all-season tyres marked M+S-for all wheels.

  Winter tyres provide the best possible grip in wintry road conditions.
- For M+S tyres, only use tyres with the same tread.
- Observe the maximum permissible speed for the M+S tyres fitted.

  If the tyre's maximum speed is below that of the vehicle, this must be indicated by an appropriate label in the driver's field of vision.
- Run in new tyres at moderate speeds for the first 100 km.
- Replace the tyres after six years at the latest, regardless of wear.
- **When replacing with tyres that do not feature run-flat characteristics:** Vehicles with MOExtended tyres are not equipped with a TIREFIT kit at the factory. Equip the vehicle with a TIREFIT kit after replacing with tyres that do not feature run-flat characteristics, e.g. winter tyres.

ⓘ You can permanently limit the speed for driving with winter tyres (→ page 318).

For more information on wheels and tyres, contact a qualified specialist workshop.

Vehicles with an AMG Driver's Package

⚠ WARNING Risk of accident caused by non-approved tyre types

If you use tyre types that have not been adapted to changes made to the factory speed limit, this can have the following consequences:

- The tyres are not suitable for high speeds and the corresponding driving dynamics.
- The tyres wear unevenly and affect the roadworthiness of the vehicle.
- ABS, ESP® and cruise control operation are restricted.

This can jeopardise road safety.

▶ Only use tyre types that have been approved for the maximum permissible speed set and the vehicle.

Notes on interchanging wheels

⚠ WARNING Risk of injury through different wheel sizes

Interchanging the front and rear wheels can severely impair the driving characteristics.

The disk brakes or wheel suspension components may also be damaged.

▶ Only interchange the front and rear wheels if the wheels and tyres have the same dimensions.

Interchanging the front and rear wheels if the wheels or tyres have different dimensions can render the general operating permit invalid. Observe the instructions and safety notes on "Changing a wheel" (→ page 603).

The wear patterns on the front and rear wheels differ:

- front wheels wear more on the tyre shoulder
- rear wheels wear more in the centre of the tyre

Do not drive with tyres that have too little tread depth. This significantly reduces traction on wet roads (aquaplaning).

On vehicles with the same front and rear wheel size, you can interchange the wheels every 5,000 to 10,000 km, depending on the wear. Ensure the direction of rotation is maintained for the wheels.

Notes on storing wheels

When storing wheels, observe the following notes:

- After removing wheels, store them in a cool, dry and preferably dark place.
- Protect the tyres from contact with oil, grease or fuel.

Overview of the tyre-change tool kit

Apart from some country-specific variants, vehicles are not equipped with a tyre-change tool kit. Consult a qualified specialist workshop to find out which wheel change tool is necessary and approved for a wheel change on your vehicle.

You require the following tools, forexample, to change a wheel:

- Jack
- Chock
- Wheel wrench
- Centring pin

ⓘ The jack weighs approximately 3.4 kg.

The maximum load capacity of the jack can be found on the sticker affixed to the jack. The jack is maintenance-free. If there is a malfunction, please contact a qualified specialist workshop.

The tyre-change tool kit is located in tool bag ① in the boot.

ⓘ Depending on the vehicle equipment, the tool bag may be located at other positions in the boot.

ⓘ When stowing the tool bag, make sure that it is adequately secured.

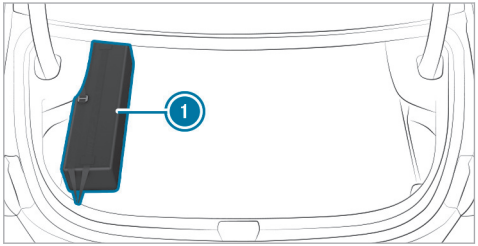

The tool bag contains:

- Jack
- Gloves
- Wheel wrench
- Centring pin
- Folding chock
- Ratchet for jack

Preparing the vehicle for a wheel change

Requirements

- The vehicle is not on a slope.
- The vehicle is on solid, non-slippery and level ground.
- The required tyre-change tool kit is available.

ⓘ If your vehicle is not equipped with the tyre-change tool kit, consult a qualified specialist workshop to find out about suitable tools.

▶ Apply the electric parking brake manually.

▶ Move the front wheels to the straight-ahead position.

▶ Shift the transmission to position [P].

▶ Switch off the vehicle.

▶ Make sure that the vehicle cannot be started.

▶ Place chocks or other suitable items under the front and rear of the wheel that is diagonally opposite the wheel you wish to change.

▶ If necessary remove wheel trims/hub caps (→ page 608).

▶ Raise the vehicle (→ page 609).

Removing and fitting the wheel trim/hub caps

Requirements

- The vehicle is prepared for a wheel change (→ page 608).

Plastic hub cap

To remove:

▶ Turn the centre cover of the hub cap anti-clockwise and remove the hub cap.

To fit:

▶ Make sure that the centre cover of the hub cap is turned anti-clockwise.

▶ Position the hub cap and turn the centre cover clockwise until the hub cap engages physically and audibly.

Aluminium hub cap

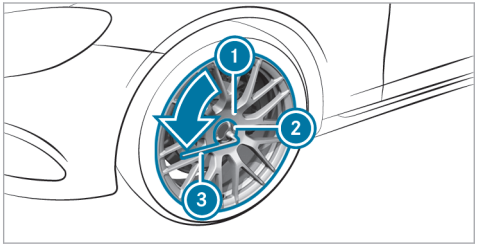

To remove:

▶ Position socket ② from the tyre-change tool kit on hub cap ①.

▶ Position wheel spanner ③ on socket ②.

▶ Using wheel spanner ③, turn hub cap ① anti-clockwise and remove it.

To fit:

▶ Follow the instructions above in reverse order.

ⓘ **Specified tightening torque:** 25 Nm.

Raising the vehicle when changing a wheel

Requirements

- There are no persons in the vehicle.
- The vehicle has been prepared for a wheel change (→ page 608).
- The wheel trims and hub caps have been removed (→ page 608).

Important notes on using the jack:

- Use only a vehicle-specific jack that has been approved by Mercedes-Benz to raise the vehicle.
- The jack is only designed for raising and holding the vehicle for a short time while a wheel is being changed and not for maintenance work under the vehicle.
- The jack must be placed on a firm, flat and non-slip surface. If necessary, use a large, flat, load-bearing, non-slip underlay.
- The foot of the jack must be positioned vertically under the jack support point.

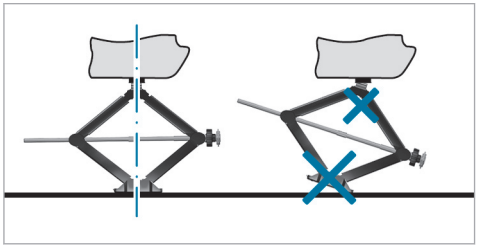

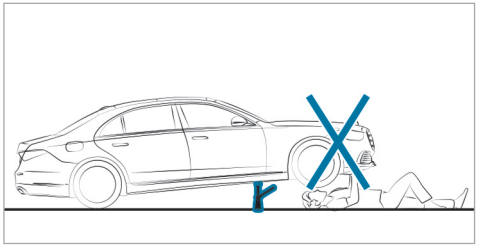

Rules of conduct when the vehicle is raised:

- Never place your hands or feet under the vehicle.
- Never lie under the vehicle.
- Do not start the vehicle and do not release the electric parking brake.
- Do not open or close any doors or the boot lid.

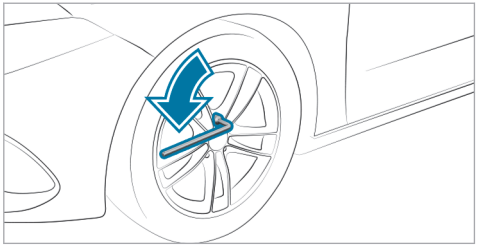

▶ Using the wheel wrench, loosen the wheel bolts on the wheel you wish to change by about one full turn. Do not unscrew the bolts completely.

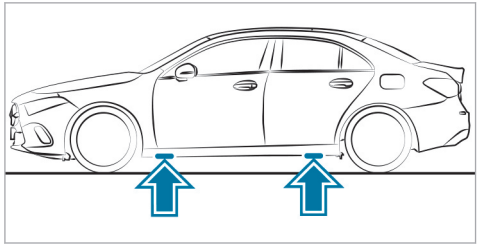

Position of the jack support points

WARNING Risk of injury from incorrect positioning of the jack

If you do not position the jack correctly at the appropriate jacking point of the vehicle, the jack could tip with the vehicle raised.

- Only position the jack at the appropriate jacking point of the vehicle. The base of the jack must be positioned vertically under the jacking point of the vehicle.

NOTE Damage to the vehicle due to the jack

If you do not position the jack at the jack support points provided for this purpose, you could damage your vehicle.

- Only position the jack at the jack support points provided for this purpose.

- Take the ratchet out of the tyre-change tool kit and place it on the hexagon nut of the jack so that the letters "AUF" are visible.

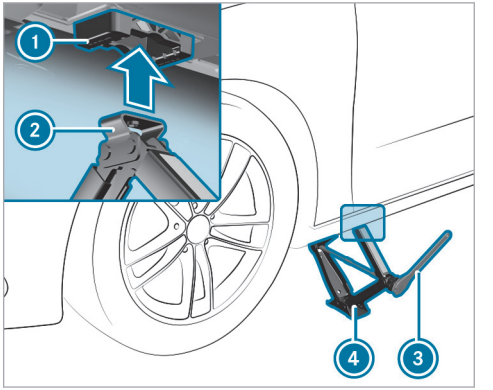

- Position support ② of jack ④ on jack support point ①.

ⓘ If there is a total loss of pressure in a tyre, it may be possible that the jack cannot be positioned at jack support point ①. In this case, unload the vehicle.

- Turn ratchet ③ clockwise until support ② sits completely on jack support point ① and the base of the jack lies evenly on the ground.
- Turn ratchet ③ until the tyre is raised a maximum of 3 cm from the ground.
- Loosen and remove the wheel (→ page 611).

Removing a wheel

Requirements

- The vehicle is raised (→ page 609).

Notes on Mercedes-AMG vehicles:

! NOTE Damage to the ceramic brake disc when changing a wheel

Mercedes-AMG vehicles with ceramic brake discs: during removal and repositioning of the wheel, the wheel rim can strike the ceramic-brake disc and damage it.

- Take particular care.
- Ask another person for assistance or use a second centring pin.

When changing a wheel, avoid applying any force to the brake disks, as this could impair the level of comfort when braking.

! NOTE Damage to threading from dirt on wheel bolts

- Do not place wheel bolts in sand or on a dirty surface.

- Unscrew the uppermost wheel bolt completely.

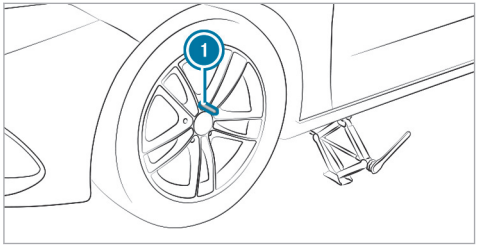

- Screw centring pin ① into the thread instead of the wheel bolt.
- Unscrew the remaining wheel bolts completely.
- Remove the wheel and, if necessary, store it in the boot.
- Notes on removing an emergency spare wheel (→ page 613).

Fitting a new wheel

Requirements

- The wheel to be changed is removed and the centring pin is screwed in (→ page 611).

⚠ WARNING Risk of accident from losing a wheel

Oiled or greased wheel bolts can cause the wheel bolts to come loose, as too can damaged wheel bolts or wheel hub threads.

- Never oil or grease the threads.
- In the event of damage to the threads, contact a qualified specialist workshop immediately.

- Have the damaged wheel bolts or damaged hub threads replaced.
- Do not continue driving.

- Observe the information on the choice of tyres (→ page 603).

For tyres with a specified direction of rotation, an arrow on the side wall of the tyre indicates the correct direction of rotation. Observe the direction of rotation when fitting.

Note on AMG vehicles:

! NOTE Damage to the ceramic brake disc when changing a wheel

Mercedes-AMG vehicles with ceramic brake discs: during removal and repositioning of the wheel, the wheel rim can strike the ceramic-brake disc and damage it.

- Take particular care.
- Ask another person for assistance or use a second centring pin.

- Slide the wheel to be mounted onto the centring pin and push it on.
- Observe the notes on fitting an emergency spare wheel (→ page 613).

⚠ WARNING Risk of injury from tightening wheel bolts and nuts

If you tighten the wheel bolts or wheel nuts when the vehicle is raised, the jack could tip.

- Only tighten wheel bolts or wheel nuts when the vehicle is on the ground.

- Observe the instructions and safety notes on "Changing a wheel" (→ page 603).
- For safety reasons, only use wheel bolts which have been approved by Mercedes-Benz and for the wheel in question.
- Tighten the wheel bolts evenly in a diagonal pattern in the order indicated until they are finger-tight.
- Unscrew and remove the centring pin.
- Tighten the last wheel bolt until it is finger-tight.

- Lower the vehicle (→ page 612).

Lowering the vehicle after a wheel change

Requirements

- The new wheel has been fitted (→ page 611).

- **To lower the vehicle:** place the ratchet onto the hexagon nut of the jack so that the letters "AB" are visible and turn anti-clockwise.

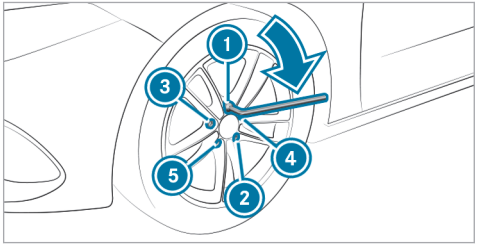

- Tighten the wheel bolts evenly in a diagonal pattern in the order indicated ① to ⑤ with an initial maximum force of 80 Nm.

▶ Tighten the wheel bolts evenly in a diagonal pattern in the order indicated ① to ⑤ with the specified tightening torque of 130 Nm.

⚠ **WARNING** Risk of accident due to incorrect tightening torque

The wheels could come loose if the wheel bolts or wheel nuts are not tightened to the prescribed torque.

▶ Ensure that the wheel bolts or wheel nuts are tightened to the prescribed tightening torque.

▶ If you are not sure, do not move the vehicle. Contact a qualified specialist workshop and have the tightening torque checked immediately.

▶ Check the tyre pressure of the newly fitted wheel and adjust it if necessary.

ⓘ The following does not apply if the new wheel is an emergency spare wheel.

▶ **Vehicles with a tyre pressure loss warning system:** restart the tyre pressure loss warning system (→ page 603).

▶ **Vehicles with a tyre pressure monitoring system:** restart the tyre pressure monitoring system (→ page 602).

Emergency spare wheel

Notes on the emergency spare wheel

⚠ **WARNING** Risk of accident caused by incorrect wheel and tyre dimensions

The wheel or tyre size and the tyre type of the emergency spare wheel or spare wheel and the wheel to be replaced may differ. The emergency spare wheel or spare wheel can significantly impair driving characteristics of the vehicle.

To prevent hazardous situations:

▶ Drive carefully.

▶ Never fit more than one emergency spare wheel or spare wheel that differs in size.

▶ Only use an emergency spare wheel or spare wheel briefly.

▶ Do not deactivate ESP®.

▶ Have the emergency spare wheel or spare wheel of a different size replaced at the nearest qualified specialist workshop. The new wheel must have the correct dimensions.

ⓘ The emergency spare wheel is secured in the emergency spare wheel bag in the boot.

Observe the following notes on removing an emergency spare wheel:

- Before stowing the emergency spare wheel, make sure there is no air left in the tyre.

  If necessary, allow the air to escape.
- **To release air from the tyre:** remove the valve cap of the tyre.
- Press down the metal insert in the valve using a pointed object, e.g. a pen.

- Screw the valve cap onto the valve.

Observe the following notes on fitting an emergency spare wheel:

- The maximum permissible speed with an emergency spare wheel fitted is 80 km/h.
- Do not fit the emergency spare wheel with snow chains.
- Replace the emergency spare wheel after six years at the latest, regardless of wear.
- Use the wheel bolts that are included with the emergency spare wheel.
- Check the tyre pressure of the emergency spare wheel fitted. Correct the pressure as necessary.

ⓘ The specified tyre pressure is stated on the label of the emergency spare wheel.

ⓘ **Vehicles with a tyre pressure loss warning system:** if an emergency spare wheel is fitted, the tyre pressure loss warning system cannot function reliably. Only restart the system again when the emergency spare wheel has been replaced with a new wheel.

Vehicles with a tyre pressure monitoring system: if an emergency spare wheel is fitted, the tyre pressure monitoring system cannot function reliably. For a few minutes after an emergency spare wheel is fitted, the system may still display the tyre pressure of the removed wheel. Only restart the system again when the emergency spare wheel has been replaced with a new wheel.

Be sure to also observe the following further related subjects:

- Notes on tyre pressure (→ page 599)
- Tyre pressure table (→ page 600)
- Notes on fitting tyres (→ page 603)
- Fitting an emergency spare wheel (→ page 608)

Inflating the emergency spare wheel

! **NOTE** Overheating due to the tyre inflation compressor running too long

▶ Do not run the tyre inflation compressor for longer than ten minutes without interruption.

Requirements

- The emergency spare wheel has been fitted correctly (→ page 608).

ⓘ Comply with the manufacturer's safety notes on the sticker of the emergency spare wheel and on the tyre inflation compressor.

▶ Remove the sticker with the label 80 km/h from the tyre inflation compressor housing and affix it to the instrument cluster within the driver's field of vision.

▶ Remove the tyre inflation compressor from the stowage space under the boot floor (→ page 54).

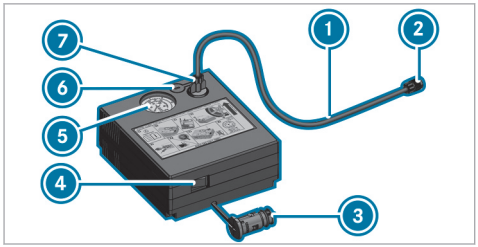

▶ Pull filler hose ① and plug ③ out of the tyre inflation compressor housing.

▶ Insert plug ⑦ of filler hose ① in the socket on the tyre inflation compressor and then turn it until plug ⑦ engages.

▶ Unscrew the cap from the valve on the emergency spare wheel.

▶ Screw union nut ② of filler hose ① onto the valve.

▶ Make sure on and off switch ④ of the tyre inflation compressor is set to **0**.

▶ Insert plug ③ in a socket in your vehicle.

- 12 V socket (→ page 194)
- Observe the notes on sockets (→ page 194).

▶ Press the start/stop button once to switch on the power supply (→ page 231).

▶ Press on and off switch ④ on the tyre inflation compressor to **I**.
The tyre inflation compressor is switched on. The tyre is inflated. The tyre pressure is shown on manometer ⑤.

▶ Pump the tyre to the specified tyre pressure.

ⓘ The specified tyre pressure is stated on the label of the emergency spare wheel.

▶ When the specified tyre pressure has been reached, press on and off switch ④ on the tyre inflation compressor to **0**.
The tyre inflation compressor is switched off.

▶ Press the start/stop button to switch off the power supply.

▶ If the tyre pressure is higher than the specified pressure, press pressure release valve button ⑥ until the correct tyre pressure has been reached.

▶ Unscrew union nut ② of filler hose ① from the valve.

▶ Screw the valve cap of the emergency spare wheel onto the valve again.

▶ Stow filler hose ① and plug ③ in the lower section of the tyre inflation compressor housing.

▶ Stow the tyre inflation compressor in the vehicle.

Notes on technical data

The technical data was determined in accordance with EU Directives. The data stated only applies to vehicles with standard equipment. You can obtain further information from a Mercedes-Benz Service Centre.

Only for certain countries: you can find vehicle-specific vehicle data in the COC documents (CERTIFICATE OF CONFORMITY). These documents are supplied when the vehicle is delivered.

On-board electronics

Notes on tampering with the engine electronics

NOTE Premature wear through improper maintenance

Improper maintenance may cause vehicle components to wear more quickly and the vehicle's operating permit may be invalidated.

▶ Always have work on the engine electronics and related components carried out at a qualified specialist workshop.

Two-way radios

Notes on installing two-way radios

WARNING Risk of accident due to improper work on two-way radios

If two-way radios are manipulated or retrofitted incorrectly, the electromagnetic radiation from the two-way radios can interfere with the vehicle electronics and jeopardise the operating safety of the vehicle.

▶ You should have all work on electrical and electronic components carried out at a qualified specialist workshop.

WARNING Risk of accident due to improper operation of two-way radios

If you use two-way radios in the vehicle improperly, their electromagnetic radiation can disrupt the vehicle's electronics. This is the case in the following situations, in particular:

- The two-way radio is not connected to an exterior aerial.
- The exterior aerial is fitted incorrectly or is not a low-reflection aerial.

This could jeopardise the operating safety of the vehicle.

▶ Have the low-reflection exterior aerial fitted at a qualified specialist workshop.

▶ When operating two-way radios in the vehicle, always connect them to the low-reflection exterior aerial.

NOTE Invalidation of the operating permit due to failure to comply with the instructions for installation and use

The operating permit may be invalidated if the instructions for installation and use of two-way radios are not observed.

▶ Only use approved frequency bands.

▶ Observe the maximum permissible output power in these frequency bands.

▶ Only use approved aerial positions.

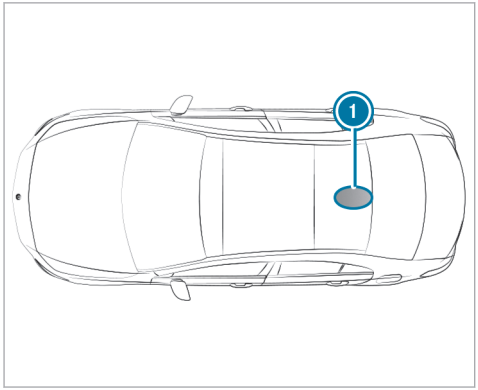

1 Rear roof area

On vehicles with a panoramic sliding sunroof, fitting an aerial is not permitted.

Use Technical Specification ISO/TS 21609 (Road Vehicles – "EMCs for installation of aftermarket radio frequency transmitting equipment") when retrofitting two-way radios. Comply with the legal requirements for detachable parts.

If your vehicle has fittings for two-way radio equipment, use the power supply and aerial connectors provided in the pre-installation. Observe the manufacturer's supplements when fitting.

Two-way radio transmission output

The maximum transmission output (PEAK) at the base of the aerial must not exceed the values in the following table.

Frequency band and maximum transmission output

Frequency band	Maximum transmission output
2-m- frequency band 144 - 174 MHz	50 W
Terrestrial Trunked Radio (TETRA) 380 - 460 MHz	10 W
Two-way radio 2G	2 W
Two-way radio 3G/4G/5G	0.5 W

The following can be used in the vehicle without restrictions:

- two-way radios with a maximum transmission output of up to 100 mW
- two-way radios with transmitter frequencies in the 380 -410 MHz frequency band and a maximum transmission output of up to 2 W (TETRA)
- mobile phones (2G/3G/4G/5G)

There are no restrictions when positioning the aerial on the outside of the vehicle for the following frequency bands:

- Terrestrial Trunked Radio (TETRA)
- 2G/3G/4G/5G

Regulatory radio information

Specific information on wireless applications in accordance with 2014/53/EU

Besides the typical frequencies for mobile communication cars by Mercedes-Benz make use of the following automotive radio applications.

Type of wireless applications and specifications in accordance with 2014/53/EU

Technology	Frequency range	Transmission output/magnetic field strength
Remote Keyless Entry	20 kHz (9–90 kHz)	≤ 72 dBµA/m at 10m
Wireless Power Transmission	105 kHz (90–119 kHz)	≤ 42 dBµA/m at 10m
Remote Keyless Entry	120 kHz (119–135 kHz)	≤ 42 dBµA/m at 10m
Wireless Power Transmission	127 kHz (119–135 kHz)	≤ 66 dBµA/m at 10m with the magnetic field strength level decreasing 3dB/octave above 119 kHz
Near-field communication	13.553–13.567 MHz	≤ 42 dBµA/m at 10m
Remote Keyless Entry, Garage Door Opener, Tire Pressure Monitoring	433 MHz (433.05–434.79 MHz)	≤ 10 mW ERP

Technology	Frequency range	Transmission output/magnetic field strength
Block Heater Remote Control, Garage Door Opener	868 MHz (868.0–868.6 MHz)	≤ 25 mW ERP
Block Heater Remote Control, Garage Door Opener	869 MHz (868.7–869.2 MHz)	≤ 25 mW ERP
Bluetooth, Kleer, RLAN, wireless Headphones	2.4 GHz ISM band (2400–2483.5 MHz)	≤ 100 mW EIRP
RLAN	5.1 GHz UNII-1 (5150–5250 MHz)	≤ 40 mW EIRP
Interior Monitoring Radar, RLAN	5.8 GHz UNII-3 (5725–5875 MHz)	≤ 40 mW EIRP
Remote Keyless Entry	7.25 GHz UWB (6.0–8.5 GHz)	≤ -41.3 dBm/MHz EIRP mean ≤ 0 dBm/MHz EIRP peak
76 GHz radar	76–77 GHz	≤ 55 dBm peak EIRP
Compensator ECE DE003 and ECE DE004	GSM (E-GSM 900) GSM (E-GSM 1800)	< +33 dBm < +30 dBm
	UMTS (I, III, VIII)	< +23 dBm
	LTE (B1, B3, B7, B8, B20)	< +23 dBm
HERMES (Hardware for Enhanced Remote, Mobility & Emergency Services)	WLAN (2400-2483.5 MHz) WLAN (5736-5833 MHz)	< 20 dBm < 14 dBm

Technology	Frequency range	Transmission output/magnetic field strength
	GSM (E-GSM 900, Class 4) GSM (E-GSM 1800, Class 1) GSM (E-GSM 900 8-PSK, Class E2) GSM (E-GSM 1800 8-PSK, Class E2)	< +33 dBm (±2 dB) < +30 dBm (±2 dB) < +27 dBm (±3 dB) < +26 dBm (± 3 dB/-4 dB)
	UMTS (2100 WCDMA FDD B1, Class 3)	< +24 dBm (±1 dB/-3 dB)
	LTE (FDD B I, B III, B38, B39, B40, B41, Class 3)	< +23 dBm (±2 dB)
	GPS (1575,42 MHz +/- 2 MHz)	Receiving only
RAMSES (Router And Mobile SErviceS)	GSM (E-GSM 850 / E-GSM 900, Class 4) GSM (E-GSM 1800 / E-GSM 1900, Class 4)	< +32.5 dBm (±1 dB) < +29.5 dBm (±1 dB)
	UMTS (WCDMA FDD I, II, III, IV, V, VIII, XIX, Class 3)	< +23.5 dBm (±1 dB)
	LTE (FDD B1, B2, B3, B4, B5, B7, B8, B9, B18, B19, B21, B28, Class 3)	< +23 dBm (±1 dB)
	LTE (TDD B38, B40, B41, Class 3)	< +23 dBm (±1 dB)
	GNSS (1559–1610 MHz)	Receiving only

Further information and updates are available at the following web address:

https://
regulatoryradioinformation.corpinter.net/en

Regulatory radio identifiers and specific notes

The tables and sections contain the following regulatory radio information:

- Manufacturer information
- Required regulatory radio identifiers, listed by country/region:
  - Manufacturer's specifications
  - Model designations
  - Radio equipment approval numbers
- Specific information on wireless vehicle components

Further information and updates are available at the following web address:

https://
regulatoryradioinformation.corpinter.net/en

Overview of manufacturers

Manufacturer	Manufacturer information
ADC	ADC Automotive Distance Control Systems GmbH, Peter-Dornier-Straße 10, 88131 Lindau, Germany
Bosch	Robert Bosch GmbH, Daimlerstraße 6, 71229 Leonberg, Germany
Continental Antenna	Continental Advanced Antenna GmbH, Römerring 1, 31137 Hildesheim, Germany
Continental Automotive	Continental Automotive GmbH, Siemensstraße 12, 93055 Regensburg, Germany
Gentex	Gentex Corporation, 600 North Centennial Street, Zeeland MI 49464, USA
Harman Becker	Harman Becker Automotive Systems GmbH, Becker-Goehring-Strasse 18, 76307 Karlsbad, Germany

Manufacturer	Manufacturer information
HELLA	HELLA KGaA Hueck & Co., Rixbecker Straße 75, 59552 Lippstadt, Germany
Hirschmann	Hirschmann Car Communication GmbH, Stuttgarter Straße 45-51, 72654 Neckartenzlingen, Germany
Huf Baolong	Huf Baolong Electronics Bretten GmbH, Gewerbestraße 40, 75015 Bretten, Germany
HUF	HUF Hülsbeck & Fürst GmbH & Co. KG, Steeger Straße 17, 42551 Velbert, Germany

Manufacturer	Manufacturer information
KATHREIN	KATHREIN Automotive GmbH & Co. KG, Römerring 1, 31137 Hildesheim, Germany
LEOPOLD KOSTAL	LEOPOLD KOSTAL GmbH & Co. KG, Hauert 11, 44227 Dortmund, Germany
MARQUARDT	MARQUARDT GmbH, Schloßstraße 16, 78604 Rietheim-Weilheim, Germany
Meta System	Meta System S.P.A., Via T. Galimberti 5, 42124 Reggio Emilia, Italy
Molex	Molex CVS Dabendorf GmbH, Märkische Straße 72, 15806 Zossen, Germany

Manufacturer	Manufacturer information
Panasonic	Panasonic Automotive Systems Europe GmbH, Robert-Bosch-Straße 27, 63225 Langen, Germany
Schrader	Schrader Electronics Ltd., 11 Technology Park, Belfast Road, Antrim BT41 1QS, Northern Ireland, United Kingdom
Sennheiser	Sennheiser electronic GmbH & Co. KG, Am Labor 1, 30900 Wedemark, Germany

Manufacturer	Manufacturer information
Veoneer	Veoneer Sweden AB, Wallentinsvägen 22, 44737 Vårgårda, Sweden
WITTE-Velbert	WITTE-Velbert GmbH & Co. KG, Hoeferstr. 3-15, 42551 Velbert, Germany

Algeria

Agréé par l'ANF
Référence du Certificat de conformité

Homologué par l'ARPCE
Référence du Certificat de conformité

Regulatory radio identification

Manufacturer	Model designation	Radio equipment approval number
Continental Antenna	RKE223GNS (locking system)	71/H/ANF/2021
Continental Automotive	CMKG1 (locking system)	122/H/ANF/2021
Continental Automotive	MARS Keyless (locking system)	122/H/ANF/2021
HELLA	DM4 (locking system)	123/H/ANF/2021
Hirschmann	920287A (locking system)	106/H/ANF/2020
Hirschmann	920287B (locking system)	107/H/ANF/2020
Hirschmann	920702A (locking system)	133/H/ANF/2022
HUF	HUF13145 (locking system)	105/H/ANF/2022
LEOPOLD KOSTAL	KK1 (locking system)	172/H/ANF/2021

Manufacturer	Model designation	Radio equipment approval number
MARQUARDT	DC12A (locking system)	188/H/ANF/2021
MARQUARDT	DC12B (locking system)	189/H/ANF/2021
MARQUARDT	DC12K (locking system)	190/H/ANF/2021
MARQUARDT	MS5 (locking system)	195/H/ANF/2021
MARQUARDT	MK1 (locking system)	193/H/ANF/2021
MARQUARDT	MK2 (locking system)	194/H/ANF/2021
MARQUARDT	3350.38 (locking system)	186/H/ANF/2021

Manufacturer	Model designation	Radio equipment approval number
Schrader	AG5SP4 (tyre pressure sensor)	3681/1-73.OA 1639/DT/DG/ARPT/15
Schrader	AG3PF4 (tyre pressure sensor)	652/1/DT/DG/ARPCE/2020
Schrader	BG3FP4 (tyre pressure sensor)	56/H/ANF/2021
Schrader	GG4T (tyre pressure sensor)	3994/1.69-DA/2098/DT/DG/ARPT/17
Schrader	DG6W2D4 (tyre pressure sensor)	2695/1-NO.431396/DT/DG/ARPT/17

Manufacturer	Model designation	Radio equipment approval number
Huf Baolong	TSSRE4A (tyre pressure sensor)	2695/1-NO.431396/DT/DG/ARPT/17
WITTE-Velbert	SDHTAG3NFC (locking system)	32/H/ANF/2021

Argentina

Regulatory radio identification

Manufacturer	Model designation	Radio equipment approval number
Continental Antenna	RKE213E1 (aerial amplifier)	H-26206
Continental Antenna	RKE223E1 (aerial amplifier)	H-24637
Continental Automotive	CMKG1 (locking system)	H-24376
Continental Automotive	MARS Keyless (locking system)	H-17929

Manufacturer	Model designation	Radio equipment approval number
Continental Automotive	D-WMI2020A (control unit)	H-23974
HELLA	DM4 (locking system)	H-17845
Hirschmann	920287A (locking system)	H-15694
Hirschmann	920287B (locking system)	H-15695
Hirschmann	920702A (locking system)	H-28310

Manufacturer	Model designation	Radio equipment approval number
Huf Baolong	TSSRE4A (tyre pressure sensor)	H-20027
HUF	HUF13145 (locking system)	H-28067
HUF	HUF14632 (locking system)	H-15541
HUF	HUF4761 (locking system)	H-11545
LEOPOLD KOSTAL	KK1 (locking system)	H-16874

Manufacturer	Model designation	Radio equipment approval number
MARQUARDT	DC12A (locking system)	H-17689
MARQUARDT	DC12B (locking system)	H-21034
MARQUARDT	DC12K (locking system)	H-21035
MARQUARDT	MS2 (locking system)	H-17598
MARQUARDT	MS4 (locking system)	H-23101
MARQUARDT	MS5 (locking system)	H-24933
MARQUARDT	MK1 (locking system)	H-17213

Manufacturer	Model designation	Radio equipment approval number
MARQUARDT	MK2 (locking system)	H-17212
MARQUARDT	3350.38 (locking system)	H-23166
Schrader	AG5SP4 (tyre pressure sensor)	H-4788
Schrader	AG3PF4 (tyre pressure sensor)	H-23292
Schrader	BG3FP4 (tyre pressure sensor)	H-25586

Manufacturer	Model designation	Radio equipment approval number
Schrader	GG4T (tyre pressure sensor)	H-20495
Schrader	DG6W2D4 (tyre pressure sensor)	H-20959
WITTE-Velbert	SDHTAG3NFC (locking system)	H-24664

Australia

Regulatory radio identification

Manufacturer	Model designation
ADC	ARS4-A (radar sensor)
ADC	ARS4-C (radar sensor)
Bosch	MRR1Rear (radar sensor)
Bosch	MRRe14FCR (radar sensor)
Bosch	FR5CPCCF (radar sensor)
Continental Antenna	RKE213E1 (aerial amplifier)
Continental Antenna	RKE223E1 (aerial amplifier)

Manufacturer	Model designation
Continental Automotive	CMKG1 (locking system)
Continental Automotive	CMKG2 (locking system)
Continental Automotive	MARS Keyless (locking system)
Hirschmann	920287A (locking system)
Hirschmann	920287B (locking system)
Hirschmann	920702A (locking system)
Huf Baolong	TSSRE4A (tyre pressure sensor)

Manufacturer	Model designation
LEOPOLD KOSTAL	KK1 (locking system)
MARQUARDT	MK1 (locking system)
MARQUARDT	MK2 (locking system)
MARQUARDT	3350.38 (locking system)
Schrader	AG5SP4 (tyre pressure sensor)
Schrader	AG3PF4 (tyre pressure sensor)
Schrader	BG3FP4 (tyre pressure sensor)
Schrader	GG4T (tyre pressure sensor)

Manufacturer	Model designation
Schrader	DG6W2D4 (tyre pressure sensor)
Veoneer	77V12BSM (radar sensor)
Veoneer	77V12CRN (radar sensor)
Veoneer	77V125CRN (radar sensor)
Veoneer	MMRV1 (radar sensor)

Bahamas

Regulatory radio identification

Manufacturer	Model designation	Radio equipment approval number
ADC	ARS4-A (radar sensor)	URCA_TA_2014_082
ADC	ARS4-C (radar sensor)	URCA_TA_2019_167
Bosch	MRR1Rear (radar sensor)	URCA_TA/2017_184
Bosch	MRRe14FCR (radar sensor)	URCA_TA/2017_157
Bosch	FR5CPCCF (radar sensor)	URCA_TA_2019_195
Continental Automotive	CMKG1 (locking system)	URCA_TA/2020_068
Continental Automotive	MARS Keyless (locking system)	URCA_TA/2017_119
Continental Antenna	RKE213E1 (aerial amplifier)	UCRA_TA/2016_009
Continental Antenna	RKE223E1GNS (aerial amplifier)	UCRA_TA/2020_032
HELLA	DM4 (locking system)	URCA_TA/2017_078
Hirschmann	920287A (locking system)	URCA_TA/2019_053
Hirschmann	920287B (locking system)	URCA_TA/2019_052

Manufacturer	Model designation	Radio equipment approval number
Hirschmann	920702A (locking system)	URCA_TA/2022_043
HUF	HUF13145 (locking system)	URCA_TA_2022_057
HUF	HUF4761 (locking system)	URCA_TA/2015_087
HUF	HUF4761 (locking system)	URCA_TA/2015_087
Huf Baolong	TSSRE4A (tyre pressure sensor)	URCA_TA/2017_094
LEOPOLD KOSTAL	KK1 (locking system)	URCA_TA/2015_081

Manufacturer	Model designation	Radio equipment approval number
MARQUARDT	DC12A (locking system)	URCA_TA_2017_042
MARQUARDT	DC12B (locking system)	URCA_TA_2019_128
MARQUARDT	DC12K (locking system)	URCA_TA_2019_129
MARQUARDT	MS2 (locking system)	URCA_TA/2017_021
MARQUARDT	MS4 (locking system)	URCA_TA_2019_141
MARQUARDT	MS5 (locking system)	URCA_TA_2020_141, URCA_TA_2022_228
MARQUARDT	MK1 (locking system)	URCA_TA/2015_031

Manufacturer	Model designation	Radio equipment approval number
MARQUARDT	MK2 (locking system)	URCA_TA/2015_033
MARQUARDT	3350.38 (locking system)	URCA_TA/2019_250
Schrader	AG5SP4 (tyre pressure sensor)	URCA_TA_TA/2015_009
Schrader	AG3PF4 (tyre pressure sensor)	URCA_TA_2019_101
Schrader	BG3FP4 (tyre pressure sensor)	URCA_TA_2021_001
Schrader	GG4T (tyre pressure sensor)	URCA_TA_2020_046

Manufacturer	Model designation	Radio equipment approval number
Schrader	DG6W2D4 (tyre pressure sensor)	URCA_TA_2019_247
Veoneer	77V12BSM (radar sensor)	URCA_TA_2019_169
Veoneer	77V12CRN (radar sensor)	URCA_TA_2019_168
Veoneer	77V125CRN (radar sensor)	URCA_TA_2021_027
Veoneer	MMRV1 (radar sensor)	URCA_TA/2015_063
WITTE-Velbert	SDHTAG3NFC (locking system)	URCA_TA_2020_056

Belarus

Regulatory radio identification

Manufacturer	Model designation
ADC	ARS4-A (radar sensor)
ADC	ARS4-C (radar sensor)
Bosch	MRR1Rear (radar sensor)
Bosch	MRRe14FCR (radar sensor)
Bosch	FR5CPCCF (radar sensor)
Continental Antenna	RKE213E1 (aerial amplifier)
Continental Antenna	RKE223E1GNS (aerial amplifier)

Manufacturer	Model designation
Continental Automotive	CMKG1 (locking system)
Continental Automotive	CMKG2 (locking system)
Continental Automotive	MARS Keyless (locking system)
Harman Becker	HERMES 3.0 (communication module)
HELLA	DM4 (locking system)
LEOPOLD KOSTAL	KK1 (locking system)
MARQUARDT	DC12A (locking system)
MARQUARDT	DC12B (locking system)

Manufacturer	Model designation
MARQUARDT	DC12K (locking system)
MARQUARDT	MS2 (locking system)
MARQUARDT	MS4 (locking system)
MARQUARDT	MS5 (locking system)
MARQUARDT	MK1 (locking system)
MARQUARDT	MK2 (locking system)
MARQUARDT	3350.38 (locking system)
Veoneer	77V12BSM (radar sensor)
Veoneer	77V12CRN (radar sensor)

Manufacturer	Model designation
Veoneer	77V125CRN (radar sensor)
Veoneer	MMRV1 (radar sensor)
WITTE-Velbert	SDHTAG3NFC (locking system)

Botswana

Regulatory radio identification

Manufacturer	Model designation	Radio equipment approval number
ADC	ARS4-A (radar sensor)	BOCRA/TA/2018/2026
ADC	ARS4-C (radar sensor)	BOCRA/TA/2020/5186
Bosch	MRRe14FCR (radar sensor)	BOCRA/TA/2019/4674
Bosch	FR5CPCCF (radar sensor)	BOCRA/TA/2019/4975
Bosch	MRR1Rear (radar sensor)	BOCRA/TA/2017/3788
Continental Antenna	RKE213E1 (aerial amplifier)	BOCRA/TA/2019/4387
Continental Antenna	RKE223E1GNS (aerial amplifier)	BOCRA/TA/2019/5050
Continental Automotive	CMKG1 (locking system)	BOCRA/TA/2019/5075
Continental Automotive	CMKG2 (locking system)	BOCRA/TA/2023/8144

Manufacturer	Model designation	Radio equipment approval number
Continental Automotive	MARS Keyless (locking system)	BOCRA/TA/2019/4661
HELLA	DM4 (locking system)	BOCRA/TA/2019/4662
Hirschmann	920287A (locking system)	BOCRA/TA/2019/4724
Hirschmann	920287B (locking system)	BOCRA/TA/2019/4723
Hirschmann	920702A (locking system)	BOCRA/TA/2022/7099
HUF	HUF13145 (locking system)	HUF13145

Manufacturer	Model designation	Radio equipment approval number
HUF	HUF4761 (locking system)	BOCRA/TA/2019/4664
LEOPOLD KOSTAL	KK1 (locking system)	BOCRA/TA/2019/4593
MARQUARDT	DC12A (locking system)	BOCRA/TA/2019/4389
MARQUARDT	DC12B (locking system)	BOCRA/TA/2019/4388
MARQUARDT	DC12K (locking system)	BOCRA/TA/2019/4390
MARQUARDT	MS2 (locking system)	BOCRA/TA/2019/5135
MARQUARDT	MS4 (locking system)	BOCRA/TA/2019/4758

Manufacturer	Model designation	Radio equipment approval number
MARQUARDT	MS5 (locking system)	BOCRA/TA/2020/5473
MARQUARDT	MK1 (locking system)	BOCRA/TA/2019/4359
MARQUARDT	MK2 (locking system)	BOCRA/TA/2019/4360
MARQUARDT	3350.38 (locking system)	BOCRA/TA/2019/4687
Veoneer	77V12BSM (radar sensor)	BOCRA/TA/2019/4975
Veoneer	77V12CRN (radar sensor)	BOCRA/TA/2019/4980

Manufacturer	Model designation	Radio equipment approval number
Veoneer	77V125CRN (radar sensor)	BOCRA/TA/2021/6191
WITTE-Velbert	SDHTAG3NFC (locking system)	BOCRA/TA/2020/5342

Brazil

Note on two-way radio systems in the vehicle:

These systems are not protected against harmful interference and must not cause interference in properly approved systems.

Regulatory radio identification

ANATEL

Manufacturer	Model designation	Radio equipment approval number
Continental Antenna	RKE223E1 (aerial amplifier)	03691-15-05298
Continental Antenna	RKE213E1 (aerial amplifier)	07359-21-12817
Continental Antenna	RKE213E1 (aerial amplifier)	3691-15-5298
Continental Automotive	CMKG1 (locking system)	00325-20-02149
Continental Automotive	CMKG2 (locking system)	01334-23-02149

ANATEL

Manufacturer	Model designation	Radio equipment approval number
Continental Automotive	MARS Keyless (locking system)	03189-17-02856
HELLA	DM4 (locking system)	04689-17-05364
Hirschmann	920287A (locking system)	1855-12-5762
Hirschmann	920287B (locking system)	1787-12-8058
HUF	HUF13145 (locking system)	HUF13145

Manufacturer	Model designation	Radio equipment approval number
HUF	HUF14632 (locking system)	03627-15-06 643
HUF	HUF4761 (locking system)	00053-13-06 643
LEOPOLD KOSTAL	KK1 (locking system)	02712-15-03 366
MARQUARDT	DC12A (locking system)	01333-17-02 930
MARQUARDT	DC12B (locking system)	01395-11-02 930

Manufacturer	Model designation	Radio equipment approval number
MARQUARDT	DC12K (locking system)	01392-11-02 930
MARQUARDT	MS2 (locking system)	00616-17-02 930
MARQUARDT	MS4 (locking system)	06218-19-02 930
MARQUARDT	MS5 (locking system)	11149-20-02 930
MARQUARDT	3350.38 (locking system)	03149-19-02 930
MARQUARDT	MK1 (locking system)	03756-15-02 930

Manufacturer	Model designation	Radio equipment approval number
MARQUARDT	MK2 (locking system)	03757-15-02 930
WITTE-Velbert	SDHTAG3NFC (locking system)	03034-20-07 018

Further specific information

Rear Seat Entertainment System:

This system is not protected against harmful interference and must not cause interference in properly approved systems.

This product is approved by ANATEL in accordance with the procedures set out in Resolution 242/2000 and complies with the relevant technical requirements. Further information can be found on the https://www.anatel.gov.br

Brunei Darussalam

Regulatory radio identification

Manufacturer	Model designation	Radio equipment approval number
ADC	ARS4-C (radar sensor)	DTA-004005
Bosch	FR5CPCCF (radar sensor)	DTA-004222
Bosch	LRR3 (radar sensor)	DTA-011039
Bosch	MRR1Rear (radar sensor)	DTA-006601
Bosch	MRRe14FCR (radar sensor)	DTA-006678

Manufacturer	Model designation	Radio equipment approval number
Continental Antenna	RKE213E1 (aerial amplifier)	DTA-006665
Continental Antenna	RKE223E1GNS (aerial amplifier)	DTA-004998
Continental Automotive	CMKG1 (locking system)	DTA-005043
Continental Automotive	CMKG2 (locking system)	DTA-023993
Continental Automotive	MARS Keyless (locking system)	DTA-017264

Manufacturer	Model designation	Radio equipment approval number
HELLA	DM4 (locking system)	DTA-020187
Hirschmann	920287A (locking system)	DTA-001661
Hirschmann	920287B (locking system)	DTA-000794
Hirschmann	920702A (locking system)	DTA-018051
Huf Baolong	TSSRE4A (tyre pressure sensor)	DTA-000310

Manufacturer	Model designation	Radio equipment approval number
Huf Baolong	TSSSG4G6b (tyre pressure monitoring system control unit)	DTA-003757
HUF	HUF13145 (locking system)	DTA-017926
HUF	HUF14632 (locking system)	DTA-006138
HUF	HUF4761 (locking system)	DTA-000615

Manufacturer	Model designation	Radio equipment approval number
LEOPOLD KOSTAL	KK1 (locking system)	DTA-007245
MARQUARDT	DC12A (locking system)	DTA-019403
MARQUARDT	DC12B (locking system)	DTA-000068
MARQUARDT	DC12K (locking system)	DTA-000066
MARQUARDT	MS2 (locking system)	LPD-38890
MARQUARDT	MS4 (locking system)	DTA-003525

Manufacturer	Model designation	Radio equipment approval number
MARQUARDT	MS5 (locking system)	DTA-005850
MARQUARDT	MK1 (locking system)	DTA-011312
MARQUARDT	MK2 (locking system)	DTA-011313
MARQUARDT	3350.38 (locking system)	DTA-003662
Schrader	AG5SP4 (tyre pressure sensor)	LPD-29665

Manufacturer	Model designation	Radio equipment approval number
Schrader	AG3PF4 (tyre pressure sensor)	LPD-29665
Schrader	BG3FP4 (tyre pressure sensor)	DRQ-D-JATI-07-2000-109000
Schrader	DG6W2D4 (tyre pressure sensor)	DTA-001514
Schrader	MFR (tyre pressure monitoring system control unit)	DTA No. 003893

Manufacturer	Model designation	Radio equipment approval number
Schrader	MFR3 (tyre pressure monitoring system control unit)	DRQ-D-MAJU-02-2011-111083
Veoneer	77V12BSM (radar sensor)	DTA-004000
Veoneer	77V12CRN (radar sensor)	DTA-003999
Veoneer	77V125CRN (radar sensor)	DTA-010423

Manufacturer	Model designation	Radio equipment approval number
Veoneer	77GHz MMRV1 (radar sensor)	DTA-006216
WITTE-Velbert	SDHTAG3NFC (locking system)	DTA-005628

Eurasian Economic Union

Regulatory radio identification

Manufacturer	Model designation
ADC	ARS4-A (radar sensor)
ADC	ARS4-C (radar sensor)
Bosch	FR5CPCCF (radar sensor)
Bosch	LRR3 (radar sensor)
Bosch	MRR1Rear (radar sensor)
Bosch	MRRe14FCR (radar sensor)
Continental Antenna	RKE213E1 (aerial amplifier)

Manufacturer	Model designation
Continental Antenna	RKE223E1GNS (aerial amplifier)
Continental Automotive	MARS Keyless (locking system)
Continental Automotive	CMKG1 (locking system)
Continental Automotive	CMKG2 (locking system)
HELLA	DM4 (locking system)
Hirschmann	920287A (locking system)
Hirschmann	920287B (locking system)

Manufacturer	Model designation
Hirschmann	920702A (locking system)
Huf Baolong	TSSRE4A (tyre pressure sensor)
HUF	HUF13145 (locking system)
HUF	HUF4761 (locking system)
HUF	HUF14632 (locking system)
LEOPOLD KOSTAL	KK1 (locking system)
MARQUARDT	DC12A (locking system)

Manufacturer	Model designation
MARQUARDT	DC12B (locking system)
MARQUARDT	DC12K (locking system)
MARQUARDT	MS2 (locking system)
MARQUARDT	MS4 (locking system)
MARQUARDT	MS5 (locking system)
MARQUARDT	MK1 (locking system)
MARQUARDT	MK2 (locking system)
MARQUARDT	3350.38 (locking system)
Schrader	AG5SP4 (tyre pressure sensor)

Manufacturer	Model designation
Schrader	AG3PF4 (tyre pressure sensor)
Schrader	BG3FP4 (tyre pressure sensor)
Schrader	GG4T (tyre pressure sensor)
Schrader	DG6W2D4 (tyre pressure sensor)
Veoneer	77GHz MMRV1 (radar sensor)
Veoneer	77V12BSM (radar sensor)
Veoneer	77V12CRN (radar sensor)

Manufacturer	Model designation
Veoneer	77V125CRN (radar sensor)
WITTE-Velbert	SDHTAG3NFC (locking system)

Ghana

Regulatory radio identification

Manufacturer	Model designation	Radio equipment approval number
		NCA APPROVED
ADC	ARS4-C (radar sensor)	ZRO-1H-7E3-152

Manufacturer	Model designation	Radio equipment approval number
Bosch	FR5CPCCF (radar sensor)	ZRO-M8-7E3-230
Continental Antenna	RKE213E1 (aerial amplifier)	ZRO-M8-7E3-X53
Continental Antenna	RKE223E1GNS (aerial amplifier)	ZRO-M8-7E3-225
Continental Automotive	CMKG1 (locking system)	ZRO-M8-7E3-277
Continental Automotive	CMKG2 (locking system)	7M-7E7-X25-DSR
Continental Automotive	MARS Keyless (locking system)	BR3-1M-GE2-16A
HELLA	DM4 (locking system)	BR3-1M-GE2-157

Manufacturer	Model designation	Radio equipment approval number
Hirschmann	920287A (locking system)	ZRO-M8-7E3-X45
Hirschmann	920287B (locking system)	ZRO-M8-7E3-X47
HUF	HUF13145 (locking system)	7E6-M1-X14-SRD
HUF	HUF4761 (locking system)	EX6-6M-GE2-16C
LEOPOLD KOSTAL	KK1 (locking system)	ZRO-M8-7E3-X49
MARQUARDT	DC12A (locking system)	ZRO-M8-7E3-X50

Manufacturer	Model designation	Radio equipment approval number
MARQUARDT	DC12B (locking system)	ZRO-M8-7E3-X51
MARQUARDT	DC12K (locking system)	ZRO-M8-7E3-X52
MARQUARDT	MS2 (locking system)	BR3-1M-GE-129
MARQUARDT	MS4 (locking system)	ZRO-1H-7E3-26E
MARQUARDT	MS5 (locking system)	SRO-1M-7E4-11B
MARQUARDT	MK1 (locking system)	ZRO-M8-7E3-X4A
MARQUARDT	MK2 (locking system)	ZRO-M8-7E3-X4C

Manufacturer	Model designation	Radio equipment approval number
MARQUARDT	3350.38 (locking system)	ZRO-M8-7E3-X3C
Veoneer	77V12BSM (radar sensor)	ZRO-1H-7E3-142
Veoneer	77V12CRN (radar sensor)	ZRO-M8-7E3-230
Veoneer	77V125CRN (radar sensor)	7E5-7M-X72-RDR
WITTE-Velbert	SDHTAG3NFC (locking system)	SRO-1M-7E4-X59

Indonesia

Regulatory radio identification

Manufacturer	Model designation	Radio equipment approval number
ADC	ARS4-C (radar sensor)	68676/SDPPI/2020 7163
ADC	ARS4-A (radar sensor)	70266/SDPPI/2020 7163
Bosch	LRR3 (radar sensor)	74264/SDPPI/2021 7163
Bosch	MRR1Rear (radar sensor)	74267/SDPPI/2021 7163

Manufacturer	Model designation	Radio equipment approval number
Bosch	MRRevo14F (radar sensor)	74265/ SDPPI/2021 7163
Bosch	MRRe14FCR (radar sensor)	74266/ SDPPI/2021 7163

Manufacturer	Model designation	Radio equipment approval number
Bosch	FR5CPCCF (radar sensor)	67882/ SDPPI/2020 7163 Dilarang melakukan perubahan spesifikasi yang dapat menimbulkan gangguan fisik dan/atau elektromagnetik terhadap lingkungan sekitarnya

Manufacturer	Model designation	Radio equipment approval number

Manufacturer	Model designation	Radio equipment approval number
Continental Antenna	RKE213E1 (aerial amplifier)	76621/ SDPPI/2021 7163 ⚠ Dilarang melakukan perubahan spesifikasi yang dapat menimbulkan gangguan fisik dan/atau elektromagnetik terhadap lingkungan sekitarnya

Manufacturer	Model designation	Radio equipment approval number

Manufacturer	Model designation	Radio equipment approval number
Continental Antenna	RKE223E1GNS (aerial amplifier)	86957/ SDPPI/ 2022 10325 ⚠ Dilarang melakukan perubahan spesifikasi yang dapat menimbulkan gangguan fisik dan/atau elektromagnetik terhadap lingkungan sekitarnya

Manufacturer	Model designation	Radio equipment approval number

Manufacturer	Model designation	Radio equipment approval number
Continental Automotive	CMKG1 (locking system)	87836/SDPPI/2023 7163 Dilarang melakukan perubahan spesifikasi yang dapat menimbulkan gangguan fisik dan/atau elektromagnetik terhadap lingkungan sekitarnya

Manufacturer	Model designation	Radio equipment approval number

Manufacturer	Model designation	Radio equipment approval number
Continental Automotive	MARS Keyless (locking system)	69379/SDPPI/2020 7163 Dilarang melakukan perubahan spesifikasi yang dapat menimbulkan gangguan fisik dan/atau elektromagnetik terhadap lingkungan sekitarnya

Manufacturer	Model designation	Radio equipment approval number

Manufacturer	Model designation	Radio equipment approval number
Continental Automotive	D-WMI2020A (control unit)	66678/SDPPI/2020 7163 Dilarang melakukan perubahan spesifikasi yang dapat menimbulkan gangguan fisik dan/atau elektromagnetik terhadap lingkungan sekitarnya

Manufacturer	Model designation	Radio equipment approval number

Manufacturer	Model designation	Radio equipment approval number
Continental Automotive	NTG7 MID (Headunit)	70732/SDPPI/2020 7163 Dilarang melakukan perubahan spesifikasi yang dapat menimbulkan gangguan fisik dan/atau elektromagnetik terhadap lingkungan sekitarnya

Manufacturer	Model designation	Radio equipment approval number

Manufacturer	Model designation	Radio equipment approval number
Continental Automotive	NTG7 HIGH (Headunit)	70733/SDPPI/2020 7163 ⚠ Dilarang melakukan perubahan spesifikasi yang dapat menimbulkan gangguan fisik dan/atau elektromagnetik terhadap lingkungan sekitarnya

Manufacturer	Model designation	Radio equipment approval number

Manufacturer	Model designation	Radio equipment approval number
Continental Automotive	NTG7 PREMIUM (Headunit)	70731/SDPPI/2020 7163 ⚠ Dilarang melakukan perubahan spesifikasi yang dapat menimbulkan gangguan fisik dan/atau elektromagnetik terhadap lingkungan sekitarnya

Manufacturer	Model designation	Radio equipment approval number

Manufacturer	Model designation	Radio equipment approval number
Continental Automotive	NTG7 PREMIUM PLUS (Headunit)	70734/SDPPI/2020 7163 ⚠ Dilarang melakukan perubahan spesifikasi yang dapat menimbulkan gangguan fisik dan/atau elektromagnetik terhadap lingkungan sekitarnya

Manufacturer	Model designation	Radio equipment approval number

Manufacturer	Model designation	Radio equipment approval number
Harman Becker	NTG6N ENTRY/MID (Headunit) Production: Germany	64019/ SDPPI/2019 7163 ⚠ Dilarang melakukan perubahan spesifikasi yang dapat menimbulkan gangguan fisik dan/atau elektromagnetik terhadap lingkungan sekitarnya

Manufacturer	Model designation	Radio equipment approval number

Manufacturer	Model designation	Radio equipment approval number
Harman Becker	NTG6N HIGH (Headunit) Production: Germany	64018/ SDPPI/2019 7163 ⚠ Dilarang melakukan perubahan spesifikasi yang dapat menimbulkan gangguan fisik dan/atau elektromagnetik terhadap lingkungan sekitarnya

Manufacturer	Model designation	Radio equipment approval number

Manufacturer	Model designation	Radio equipment approval number
Harman Becker	NTG6N ENTRY/MID (Headunit) Production: Hungary	63775/ SDPPI/2019 7163 ⚠ Dilarang melakukan perubahan spesifikasi yang dapat menimbulkan gangguan fisik dan/atau elektromagnetik terhadap lingkungan sekitarnya

Manufacturer	Model designation	Radio equipment approval number

Manufacturer	Model designation	Radio equipment approval number
Harman Becker	NTG6N HIGH (Headunit) Production: Hungary	63774/ SDPPI/2019 7163 Dilarang melakukan perubahan spesifikasi yang dapat menimbulkan gangguan fisik dan/atau elektromagnetik terhadap lingkungan sekitarnya

Manufacturer	Model designation	Radio equipment approval number

Manufacturer	Model designation	Radio equipment approval number
Harman Becker	NTG7 MID (Headunit)	65544/ SDPPI/2020 7163 Dilarang melakukan perubahan spesifikasi yang dapat menimbulkan gangguan fisik dan/atau elektromagnetik terhadap lingkungan sekitarnya

Manufacturer	Model designation	Radio equipment approval number

Manufacturer	Model designation	Radio equipment approval number
Harman Becker	NTG7 HIGH (Headunit)	70513/SDPPI/2020 7163 ⚠ Dilarang melakukan perubahan spesifikasi yang dapat menimbulkan gangguan fisik dan/atau elektromagnetik terhadap lingkungan sekitarnya

Manufacturer	Model designation	Radio equipment approval number

Manufacturer	Model designation	Radio equipment approval number
Harman Becker	NTG7 PREMIUM (Headunit)	65543/SDPPI/2020 7163 ⚠ Dilarang melakukan perubahan spesifikasi yang dapat menimbulkan gangguan fisik dan/atau elektromagnetik terhadap lingkungan sekitarnya

Manufacturer	Model designation	Radio equipment approval number

Manufacturer	Model designation	Radio equipment approval number
Harman Becker	NTG7 PREMIUM PLUS (Headunit)	70512/SDPPI/2020 7163 ⚠ Dilarang melakukan perubahan spesifikasi yang dapat menimbulkan gangguan fisik dan/atau elektromagnetik terhadap lingkungan sekitarnya

Manufacturer	Model designation	Radio equipment approval number

Manufacturer	Model designation	Radio equipment approval number
Harman Becker	NTG7 RSU (control unit)	66387/ SDPPI/2020 7163 Dilarang melakukan perubahan spesifikasi yang dapat menimbulkan gangguan fisik dan/atau elektromagnetik terhadap lingkungan sekitarnya

Manufacturer	Model designation	Radio equipment approval number

Manufacturer	Model designation	Radio equipment approval number
HELLA	DM4 (locking system)	69378/ SDPPI/2020 7163 Dilarang melakukan perubahan spesifikasi yang dapat menimbulkan gangguan fisik dan/atau elektromagnetik terhadap lingkungan sekitarnya

Manufacturer	Model designation	Radio equipment approval number
Huf Baolong	TSSRE4A (tyre pressure sensor)	72438/ SDPPI/2021 7163

Manufacturer	Model designation	Radio equipment approval number
Hirschmann	920287A (locking system)	71369 / SDPPI/2020 7163 Dilarang melakukan perubahan spesifikasi yang dapat menimbulkan gangguan fisik dan/atau elektromagnetik terhadap lingkungan sekitarnya

Manufacturer	Model designation	Radio equipment approval number

Manufacturer	Model designation	Radio equipment approval number
Hirschmann	920287B (locking system)	72974 / SDPPI/2021 7163 ⚠ Dilarang melakukan perubahan spesifikasi yang dapat menimbulkan gangguan fisik dan/atau elektromagnetik terhadap lingkungan sekitarnya

Manufacturer	Model designation	Radio equipment approval number

Manufacturer	Model designation	Radio equipment approval number
Hirschmann	920702A (locking system)	82675/SDPPI/2022 7163 Dilarang melakukan perubahan spesifikasi yang dapat menimbulkan gangguan fisik dan/atau elektromagnetik terhadap lingkungan sekitarnya

Manufacturer	Model designation	Radio equipment approval number

Manufacturer	Model designation	Radio equipment approval number
HUF	HUF14632 (locking system)	78368/SDPPI/2021 7163 Dilarang melakukan perubahan spesifikasi yang dapat menimbulkan gangguan fisik dan/atau elektromagnetik terhadap lingkungan sekitarnya

Manufacturer	Model designation	Radio equipment approval number

Manufacturer	Model designation	Radio equipment approval number
HUF	HUF4761 (locking system)	26742/SDPPI/2015 3533 Dilarang melakukan perubahan spesifikasi yang dapat menimbulkan gangguan fisik dan/atau elektromagnetik terhadap lingkungan sekitarnya

Manufacturer	Model designation	Radio equipment approval number

Manufacturer	Model designation	Radio equipment approval number
HUF	HUF13145 (NFC reader)	83988/ SDPPI/2022 Dilarang melakukan perubahan spesifikasi yang dapat menimbulkan gangguan fisik dan/atau elektromagnetik terhadap lingkungan sekitarnya

Manufacturer	Model designation	Radio equipment approval number
LEOPOLD KOSTAL	KK1 (locking system)	41121/ SDPPI/2018 5125

Manufacturer	Model designation	Radio equipment approval number
MARQUARDT	DC12A (locking system)	67373/ SDPPI/2020 7163 Dilarang melakukan perubahan spesifikasi yang dapat menimbulkan gangguan fisik dan/atau elektromagnetik terhadap lingkungan sekitarnya

Manufacturer	Model designation	Radio equipment approval number

Manufacturer	Model designation	Radio equipment approval number
MARQUARDT	DC12B (locking system)	80676/SDPPI/2022 7163 Dilarang melakukan perubahan spesifikasi yang dapat menimbulkan gangguan fisik dan/atau elektromagnetik terhadap lingkungan sekitarnya

Manufacturer	Model designation	Radio equipment approval number

Manufacturer	Model designation	Radio equipment approval number
MARQUARDT	DC12K (locking system)	80621/SDPPI/2022 7163 Dilarang melakukan perubahan spesifikasi yang dapat menimbulkan gangguan fisik dan/atau elektromagnetik terhadap lingkungan sekitarnya

Manufacturer	Model designation	Radio equipment approval number

Manufacturer	Model designation	Radio equipment approval number
MARQUARDT	MS2 (locking system)	67372/SDPPI/2020 7163 Dilarang melakukan perubahan spesifikasi yang dapat menimbulkan gangguan fisik dan/atau elektromagnetik terhadap lingkungan sekitarnya

Manufacturer	Model designation	Radio equipment approval number

Manufacturer	Model designation	Radio equipment approval number
MARQUARDT	MS4 (locking system)	64126/SDPPI/2019 7163 ⚠ Dilarang melakukan perubahan spesifikasi yang dapat menimbulkan gangguan fisik dan/atau elektromagnetik terhadap lingkungan sekitarnya

Manufacturer	Model designation	Radio equipment approval number

Manufacturer	Model designation	Radio equipment approval number
MARQUARDT	MS5 (locking system)	69077/ SDPPI/2020 7163 7163 Dilarang melakukan perubahan spesifikasi yang dapat menimbulkan gangguan fisik dan/atau elektromagnetik terhadap lingkungan sekitarnya

Manufacturer	Model designation	Radio equipment approval number

Manufacturer	Model designation	Radio equipment approval number
MARQUARDT	MK1 (locking system)	75282/ SDPPI/ 2021 7163 Dilarang melakukan perubahan spesifikasi yang dapat menimbulkan gangguan fisik dan/atau elektromagnetik terhadap lingkungan sekitarnya

Manufacturer	Model designation	Radio equipment approval number

Manufacturer	Model designation	Radio equipment approval number
MARQUARDT	MK2 (locking system)	75285/ SDPPI/ 2021 7163 ⚠ Dilarang melakukan perubahan spesifikasi yang dapat menimbulkan gangguan fisik dan/atau elektromagnetik terhadap lingkungan sekitarnya

Manufacturer	Model designation	Radio equipment approval number

Manufacturer	Model designation	Radio equipment approval number
MARQUARDT	3350.38 (locking system)	82980/SDPPI/2022 7163 ⚠ Dilarang melakukan perubahan spesifikasi yang dapat menimbulkan gangguan fisik dan/atau elektromagnetik terhadap lingkungan sekitarnya

Manufacturer	Model designation	Radio equipment approval number

Manufacturer	Model designation	Radio equipment approval number
Molex	WCH-302b (control unit)	71668/SDPPI/2020 7163 ⚠ Dilarang melakukan perubahan spesifikasi yang dapat menimbulkan gangguan fisik dan/atau elektromagnetik terhadap lingkungan sekitarnya

Manufacturer	Model designation	Radio equipment approval number

Manufacturer	Model designation	Radio equipment approval number
Molex	WCH-302d (control unit)	71220/SDPPI/2020 7163 Dilarang melakukan perubahan spesifikasi yang dapat menimbulkan gangguan fisik dan/atau elektromagnetik terhadap lingkungan sekitarnya

Manufacturer	Model designation	Radio equipment approval number

Manufacturer	Model designation	Radio equipment approval number
Molex	WCH-302e (control unit)	71669/SDPPI/2020 7163 Dilarang melakukan perubahan spesifikasi yang dapat menimbulkan gangguan fisik dan/atau elektromagnetik terhadap lingkungan sekitarnya

Manufacturer	Model designation	Radio equipment approval number

Manufacturer	Model designation	Radio equipment approval number
Panasonic	DAIRSE (control unit)	63550/SDPPI/2019 Dilarang melakukan perubahan spesifikasi yang dapat menimbulkan gangguan fisik dan/atau elektromagnetik terhadap lingkungan sekitarnya

Manufacturer	Model designation	Radio equipment approval number
Schrader	GG4T (tyre pressure sensor)	72023/SDPPI/2020 9338
Schrader	AG5SP4 (tyre pressure sensor)	75465/SDPPI/2021 7163

Manufacturer	Model designation	Radio equipment approval number
Schrader	BG3FP4 (tyre pressure sensor)	72765/SDPP/2021 7163
Schrader	DG6W2D4 (tyre pressure sensor)	57058/SDPPI/2018 3612
Schrader	MC34MA4 (tyre pressure monitoring system control unit)	25626/SDPPI/2015 3612

Manufacturer	Model designation	Radio equipment approval number
Schrader	AG3PF4 (tyre pressure sensor)	62396/SDPPI/2020 7163
Schrader	GG4T (tyre pressure sensor)	72023/SDPPI/2020 7163

Manufacturer	Model designation	Radio equipment approval number
Veoneer	77GHz MMRV1 (radar sensor)	74749/SDPPI/2021 7163
Veoneer	77V12CRN (radar sensor)	66830/SDPPI/2020 7163

Manufacturer	Model designation	Radio equipment approval number
Veoneer	77V125CRN (radar sensor)	78366/SDPPI/2021 7163

Manufacturer	Model designation	Radio equipment approval number
Veoneer	77V12BSM (radar sensor)	66792/SDPPI/2020 7163

Manufacturer	Model designation	Radio equipment approval number
WITTE-Velbert	SDHTAG3NFC (locking system)	67233/SDPPI/2020 10325 ⚠ Dilarang melakukan perubahan spesifikasi yang dapat menimbulkan gangguan fisik dan/atau elektromagnetik terhadap lingkungan sekitarnya

Manufacturer	Model designation	Radio equipment approval number

Israel

Regulatory radio identification

Manufacturer	Model designation	Radio equipment approval number
		Approval number of the Ministry of Communications:
ADC	ARS4-A (radar sensor)	55-09697
ADC	ARS4-C (radar sensor)	55-07525
Bosch	FR5CPCCF (radar sensor)	55-08783
Bosch	LRR3 (radar sensor)	55-08334
Bosch	MRR1Rear (radar sensor)	55-08333
Bosch	MRRe14FCR (radar sensor)	55-08395
Continental Antenna	RKE213E1 (aerial amplifier)	55-13929
Continental Automotive	D-WMI2017B (control unit)	51-75654

Manufacturer	Model designation	Radio equipment approval number
Continental Automotive	D-WMI2017A (control unit)	51-75367
Continental Automotive	D-WMI2016A (control unit)	55-08177
Continental Automotive	D-WMI2020A (control unit)	55-08179
Continental Automotive	RKE213E1 (Antennenverstärker)	55-13929
Continental Automotive	RKE223E1GNS (Antennenverstärker)	51-70799
Continental Automotive	CMKG1 (Schließsystem)	51-87871

Manufacturer	Model designation	Radio equipment approval number
Continental Automotive	MARS Keyless (Schließsystem)	55-13749
Harman Becker	NTG7 HIGH-IL (Headunit)	51-89476
Harman Becker	NTG7 PREMIUMPLUS-IL (Headunit)	51-89475
HELLA	DM4 (Schließsystem)	55-14271
Hirschmann	920287A (Schließsystem)	51-62759

Manufacturer	Model designation	Radio equipment approval number
Hirschmann	920287B (Schließsystem)	51-49357
Hirschmann	920702A (Schließsystem)	55-12320
Huf Baolong	TSSRE4A (tyre pressure sensor)	63-63571
Huf Baolong	TSSSG4G6b (tyre pressure monitoring system control unit)	63-66757
HUF	HUF13145 (locking system)	55-14153

Manufacturer	Model designation	Radio equipment approval number
LEOPOLD KOSTAL	KK1 (locking system)	51-87872
MARQUARDT	DC12A (locking system)	55-13847
MARQUARDT	DC12B (locking system)	55-12215
MARQUARDT	DC12K (locking system)	55-12214
MARQUARDT	MS2 (locking system)	51-85192
MARQUARDT	MS5 (locking system)	51-86840
MARQUARDT	3350.38 (locking system)	55-14331

Manufacturer	Model designation	Radio equipment approval number
Schrader	AG3PF4 (tyre pressure sensor)	51-78338
Schrader	AG5SP4 (tyre pressure sensor)	51-73152
Schrader	BG3FP4 (tyre pressure sensor)	51-77898
Schrader	DG6W2D4 (tyre pressure sensor)	51-64111
Schrader	GG4T (tyre pressure sensor)	55-09441

Manufacturer	Model designation	Radio equipment approval number
Schrader	MC34MA4 (tyre pressure monitoring system control unit)	51-29611
Schrader	MFR (tyre pressure monitoring system control unit)	55-06040
Schrader	MFR3 (tyre pressure monitoring system control unit)	51-79817
Veoneer	77V12BSM (radar sensor)	55-08176

Manufacturer	Model designation	Radio equipment approval number
Veoneer	77V12CRN (radar sensor)	55-08301
WITTE-Velbert	SDHTAG3NFC (locking system)	55-12216

Jamaica

Regulatory radio identification

Manufacturer	Model designation
Continental Automotive	CMKG1 (locking system)
Continental Automotive	CMKG2 (locking system)
Continental Automotive	RKE213E1 (aerial amplifier)
Continental Automotive	RKE223E1GNS (aerial amplifier)
Continental Automotive	MARS Keyless (locking system)
Hirschmann	920287A (locking system)
Hirschmann	920287B (locking system)
Hirschmann	920702A (locking system)
HELLA	DM4 (locking system)
HUF	HUF13145 (locking system)
LEOPOLD KOSTAL	KK1 (locking system)
MARQUARDT	DC12A (locking system)
MARQUARDT	DC12B (locking system)
MARQUARDT	DC12K (locking system)
MARQUARDT	MS2 (locking system)
MARQUARDT	MS4 (locking system)
MARQUARDT	MS5 (locking system)
MARQUARDT	MK1 (locking system)
MARQUARDT	MK2 (locking system)
MARQUARDT	3350.38 (locking system)
WITTE-Velbert	SDHTAG3NFC (locking system)

Japan

Regulatory radio identification

Manufacturer	Model designation	Radio equipment approval number
Sennheiser	M3IETW2R (Earbud)	201-190814 (R)
Sennheiser	M3IETW2L (Earbud)	201-190815 (L)
Sennheiser	BTT100 (Bluetooth Audio Transmitter)	020-180077

Canada

Regulatory radio identification

Manufacturer	Model designation	Radio equipment approval number
Sennheiser	M3IETW2R (Earbud)	IC:2099A-M3IETW2R
Sennheiser	M3IETW2L (Earbud)	IC:2099A-M3IETW2L
Sennheiser	BTT100 (Bluetooth Audio Transmitter)	IC:2099A-BTT100
Sennheiser	M3IETW2 C (Charging Case)	CAN ICS-3(B)/NMB-3(B)

Kuwait

Regulatory radio identification

Manufacturer	Model designation	Radio equipment approval number
Sennheiser	M3IETW2 (Momentum True Wireless 2)	Ref. 4870
Sennheiser	BTT100 (Bluetooth Audio Transmitter)	Ref. 4871

Malaysia

Regulatory radio identification

Manufacturer	Model designation	Radio equipment approval number
ADC	ARS4-C (radar sensor)	HIDF15000153
Bosch	FR5CPCCF (radar sensor)	CIDF15000490
Bosch	LRR3 (radar sensor)	CIDF15000490
Bosch	MRR1Rear (radar sensor)	CIDF15000490
Bosch	MRRe14FCR (radar sensor)	CIDF15000490

Manufacturer	Model designation	Radio equipment approval number
Bosch	MRRevo14F (radar sensor)	CIDF15000490
Continental Antenna	RKE213E1 (aerial amplifier)	HIDF15000153
Continental Antenna	RKE223E1GNS (aerial amplifier)	HIDF16000136
Continental Automotive	CMKG1 (locking system)	HIDF15000153
Continental Automotive	MARS Keyless (locking system)	CIDF15000578

Manufacturer	Model designation	Radio equipment approval number
Continental Automotive	UWBTRX1 (locking system)	HIDF15000153
Continental Automotive	D-WMI2020A (control unit)	RGEZ/12A/1019/S(19-4128)
HELLA	DM4 (locking system)	CIDF15000578
Hirschmann	920287A (locking system)	RAUU/63A/0311/S(11-0432)
Hirschmann	920287B (locking system)	RAUU/22C/0615/S(15-1864)

Manufacturer	Model designation	Radio equipment approval number
Hirschmann	920702A (locking system)	HIDF15000153
Huf Baolong	TSSRE4A (tyre pressure sensor)	CIDF17000184
HUF	HUF13145 (locking system)	RFBY/09A/0422/S(22-1843)
HUF	HUF14632 (locking system)	RAYN/25A/0715/S(15-2385)

Manufacturer	Model designation	Radio equipment approval number
HUF	HUF4761 (locking system)	RAAU/16B/1112/S(12-2053)
LEOPOLD KOSTAL	KK1 (locking system)	HIDF15000153
MARQUARDT	DC12A (locking system)	RDDK/33A/0317/S(17-0669)
MARQUARDT	DC12B (locking system)	RAUU/62A/0311/S(11-0263)
MARQUARDT	DC12K (locking system)	RAUU/62A/0311/S(11-0264)

Manufacturer	Model designation	Radio equipment approval number
MARQUARDT	MS2 (locking system)	RDDK/31A/0217/S(17-0405)
MARQUARDT	MS4 (locking system)	RDDK/25B/1019/S(19-0943)
MARQUARDT	MS5 (locking system)	RGLO/02A/0720/S(20-2580)
MARQUARDT	MK1 (locking system)	CIDF19000029
MARQUARDT	MK2 (locking system)	CIDF19000029

Manufacturer	Model designation	Radio equipment approval number
MARQUARDT	3350.38 (locking system)	CIDF19000029
Meta System	ITS/TPS (interior protection)	RAVG/18Q/0212/S(11-2068)
Meta System	MUW II (interior protection)	RAVG/17Q/0212/S(11-2067)
Schrader	AG5SP4 (tyre pressure sensor)	RCDD/03A/0615/S(19-2094)

Manufacturer	Model designation	Radio equipment approval number
Schrader	AG3PF4 (tyre pressure sensor)	RBEF/28A/0419/S/(19-1542)
Schrader	BG3FP4 (tyre pressure sensor)	RBEF/51A/0121/S/(20-5642)
Schrader	MFR (tyre pressure monitoring system control unit)	RAQP/62A/0419/S(19-1694)

Manufacturer	Model designation	Radio equipment approval number
Schrader	MFR3 (tyre pressure monitoring system control unit)	RAQP/62A/0419/S(19-1694)
Veoneer	77GHz MMRV1 (radar sensor)	HIDF15000153
Veoneer	77V12BSM (radar sensor)	HIDF15000153
Veoneer	77V12CRN (radar sensor)	HIDF15000153

Manufacturer	Model designation	Radio equipment approval number
Veoneer	77V125CRN (radar sensor)	HIDF15000153
WITTE-Velbert	SDHTAG3NFC (locking system)	RDDK/43B/0420/S(20-1749)

Morocco

Regulatory radio identification

Manufacturer	Model designation	Radio equipment approval number
		AGREE PAR L'ANRT MAROC
ADC	ARS4-A (radar sensor)	MR 9490 ANTR 2014-07-23
ADC	ARS4-C (radar sensor)	MR 20231 ANRT 2019-06-27
Bosch	FR5CPCCF (radar sensor)	MR 20575 ANRT 2019-07-29
Bosch	LRR3 (radar sensor)	MR 5371 ANRT 2010 2019-12-05
Bosch	MRR1Rear (radar sensor)	MR 9186 ANTR 2014-04-22
Bosch	MRRe14FCR (radar sensor)	MR 13900 ANTR 2017-05-04
Continental Antenna	RKE213E1 (aerial amplifier)	MR 10631 ANTR 2015-07-16
Continental Antenna	RKE223E1GNS (aerial amplifier)	MR 21174 ANTR 2019-10-14
Continental Automotive	CMKG1 (locking system)	MR 21701 ANTR 2019-12-05
Continental Automotive	CMKG2 (locking system)	MR 36542 ANRT 2023-02-01

Manufacturer	Model designation	Radio equipment approval number
Continental Automotive	MARS Keyless (locking system)	MR 13681 ANTR 2017-04-04
HELLA	DM4 (locking system)	MR 14426 ANTR 2017-07-28
Hirschmann	920287A (locking system)	MR 6700 ANTR 2011-11-16
Hirschmann	920287B (locking system)	MR 7260 ANTR 2012-06-13
Hirschmann	920702A (locking system)	MR 32214 ANTR 2022-03-08

Manufacturer	Model designation	Radio equipment approval number
Huf Baolong	TSSRE4A (tyre pressure monitoring system control unit)	MR 14320 ANTR 2017-07-07
Huf Baolong	TSSSG4G6b (tyre pressure monitoring system control unit)	MR 19561 ANTR 2019-04-26
HUF	HUF13145 (locking system)	MR 32395 ANRT 2022-03-24
HUF	HUF14632 (locking system)	MR 10506 ANTR 2015-06-22
HUF	HUF4761 (locking system)	MR 7829 ANTR 2013-02-14

Manufacturer	Model designation	Radio equipment approval number
LEOPOLD KOSTAL	KK1 (locking system)	MR 10697 ANTR 2015-08-05
MARQUARDT	DC12A (locking system)	MR 13429 ANTR 2017-03-03
MARQUARDT	DC12B (locking system)	MR 6698 ANTR 2021-11-04
MARQUARDT	DC12K (locking system)	MR 6699 ANTR 2021-11-04
MARQUARDT	MS2 (locking system)	MR 13300 ANTR 2017-02-15
MARQUARDT	MS4 (locking system)	MR 19199 ANTR 2019-03-25

Manufacturer	Model designation	Radio equipment approval number
MARQUARDT	MS5 (locking system)	MR 23805 ANRT 2020-04-22
MARQUARDT	MK1 (locking system)	MR 10645 ANTR 2015-07-21
MARQUARDT	MK2 (locking system)	MR 10987 ANTR 2015-10-22
MARQUARDT	3350.38 (locking system)	MR 18817 ANTR 2019-02-12
Schrader	AG5SP4 (tyre pressure monitoring system control unit)	MR 10216 ANRT 2015

Manufacturer	Model designation	Radio equipment approval number
Schrader	AG3PF4 (tyre pressure sensor)	MR 19241 ANRT 2019
Schrader	BG3FP4 (tyre pressure sensor)	MR00026829 ANRT2020
Schrader	MFR (tyre pressure monitoring system control unit)	MR 19527 ANRT 2019-04-30
Schrader	MFR3 (tyre pressure monitoring system control unit)	MR 19527 ANRT 2019
Schrader	GG4T (tyre pressure sensor)	MR 14777 ANRT 2017-09-20

Manufacturer	Model designation	Radio equipment approval number
Schrader	DG6W2D4 (tyre pressure sensor)	MR 16355 ANRT 2018-04-19
Schrader	MC34MA4 (tyre pressure monitoring system control unit)	MR 6706 ANRT 2011-11-17
Veoneer	77GHz MMRV1 (radar sensor)	MR 10436 ANRT 2015-05-25
Veoneer	77V12BSM (radar sensor)	MR 20097 ANRT 2019-06-14
Veoneer	77V12CRN (radar sensor)	MR 20149 ANRT 2019-06-19

Manufacturer	Model designation	Radio equipment approval number
Veoneer	77V125CRN (radar sensor)	MR 27966 ANRT 2021-03-29
WITTE-Velbert	SDHTAG3NFC (locking system)	MR 23310 ANRT 2020-03-10

Mexico

Regulatory radio identification

NOM	NYCE	ANCE
Manufacturer	Model designation	Radio equipment approval number
ADC	ARS4-A (radar sensor)	IFETEL: RCPCOAR14-1191
ADC	ARS4-C (radar sensor)	IFETEL: RLVCOR19-1062
Bosch	LRR3 (radar sensor)	IFETEL: RCPBOLR09-0828
Bosch	MRR1Rear (radar sensor)	IFETEL: RCPBOMR14-0922

NOM	NYCE	ANCE
Manufacturer	Model designation	Radio equipment approval number
Bosch	MRRe14FCR (radar sensor)	IFETEL: RCPBOMR17-0598
Continental Antenna	RKE213E1 (aerial amplifier)	IFETEL: RLVKARK15-1741
Continental Antenna	RKE223E1 (aerial amplifier)	IFETEL: RLVCORK19-2174
Continental Automotive	CMKG1 (locking system)	IFETEL: RCPCOCM19-2315

NOM	NYCE	ANCE
Manufacturer	Model designation	Radio equipment approval number
Continental Automotive	CMKG2 (locking system)	IFETEL: COCOCM22-31003
Continental Automotive	MARS Keyless (locking system)	IFETEL: RLVDAMA18-1827
Continental Automotive	UWBTRX1 (locking system)	IFETEL: MECOCM22-17609
Gentex	MUAHL 5 (convenience system)	IFETEL: RCPGEMU15-0448

NOM	NYCE	ANCE
Manufacturer	Model designation	Radio equipment approval number
HELLA	DM4 (locking system)	IFETEL: RLVHEDM17-10
Hirschmann	920287A (locking system)	IFETEL: RLVHI9211-0472
Hirschmann	920287B (locking system)	IFETEL: RLVHI9212-0608
Hirschmann	920702A (locking system)	IFETEL: RLVHI9222-2674

NOM	NYCE	ANCE
Manufacturer	Model designation	Radio equipment approval number
Huf Baolong	TSSRE4A (tyre pressure sensor)	IFETEL: RLVHUTS17-0806
HUF	HUF13145 (locking system)	IFETEL: RCPHUHU22-2505
HUF	HUF14632 (locking system)	IFETEL: RLVHUHU15-1204
HUF	HUF4761 (locking system)	IFETEL: RLVHUHU12-1587

Manufacturer	Model designation	Radio equipment approval number
LEOPOLD KOSTAL	KK1 (locking system)	IFETEL: RLVKOKK15-0891
MARQUARDT	DC12A (locking system)	IFETEL: RLVMEDC17-0348
MARQUARDT	DC12B (locking system)	IFETEL: RLVMADC11-0446
MARQUARDT	DC12K (interior protection)	IFETEL: RLVMADC11-0446

Manufacturer	Model designation	Radio equipment approval number
MARQUARDT	MS2 (locking system)	IFETEL: RLVMAMS17-0222
MARQUARDT	MS4 (locking system)	IFETEL: RLVMAMS19-0449
MARQUARDT	MS5 (locking system)	IFETEL: RLVMEMS20-0957
MARQUARDT	MK1 (locking system)	IFETEL: RLVMAMK15-1042

Manufacturer	Model designation	Radio equipment approval number
MARQUARDT	MK2 (locking system)	IFETEL: RLVMAMK15-1043
MARQUARDT	3350.38 (locking system)	IFETEL: RCPMA3319-0530
Schrader	AG5SP4 (tyre pressure sensor)	IFETEL: RCPSCAG15-0627
Schrader	AG3PF4 (tyre pressure sensor)	IFETEL: RLVSCAG19-0705

NOM	NYCE	ANCE
Manufacturer	Model designation	Radio equipment approval number
Schrader	BG3FP4 (tyre pressure sensor)	IFETEL: RLVSCBG21-0750
Schrader	MFR (tyre pressure sensor)	IFETEL: RLVSCMF15-0959
Schrader	MFR3 (tyre pressure sensor)	IFETEL: RLVSCMF19-0777
Schrader	GG4T (tyre pressure sensor)	IFETEL: RLVSCGG17-1665

NOM	NYCE	ANCE
Manufacturer	Model designation	Radio equipment approval number
Schrader	DG6W2D4 (tyre pressure sensor)	IFETEL: RLVSCDG18-04
Schrader	MC34MA4 (tyre pressure monitoring system control unit)	IFETEL: RCPSCMR14-062
Sennheiser	M3IETW2R (Earbud)	IFETEL: RCPSEM320-0435-A1
Sennheiser	M3IETW2L (Earbud)	IFETEL: RCPSEM320-0435

NOM	NYCE	ANCE
Manufacturer	Model designation	Radio equipment approval number
Sennheiser	BTT100 (Bluetooth Audio Transmitter)	IFETEL: RCPSEBT18-1407
WITTE-Velbert	SDHTAG3NFC (locking system)	IFETEL: RCPWISD20-0943

Mongolia

Regulatory radio identification

Manufacturer	Model designation	Radio equipment approval number
Continental Automotive	CMKG1 (locking system)	A19000633
Continental Automotive	CMKG2 (locking system)	A23000900
Continental Automotive	MARS Keyless (locking system)	A18000328
HELLA	DM4 (locking system)	A18000329
Hirschmann	920702A (locking system)	A22000649
HUF	HUF13145 (locking system)	A22000674
MARQUARDT	DC12A (locking system)	A19000400
MARQUARDT	DC12B (locking system)	A19000371
MARQUARDT	DC12K (locking system)	A19000372
MARQUARDT	MS2 (locking system)	A18000289
MARQUARDT	MS4 (locking system)	A19000516
MARQUARDT	MS5 (locking system)	A20000085
MARQUARDT	MK1 (locking system)	A19000374
MARQUARDT	MK2 (locking system)	A19000374

Manufacturer	Model designation	Radio equipment approval number
MARQUARDT	3350.38 (locking system)	A19000401
WITTE-Velbert	SDHTAG3NFC (locking system)	A20000067

Niger

Regulatory radio identification

Manufacturer	Model designation	Radio equipment approval number
Continental Antenna	RKE213E1 (aerial amplifier)	029/ARCEP/DG/19
Continental Automotive	MARS Keyless (locking system)	083/ARCEP/DG/19
HELLA	DM4 (locking system)	082/ARCEP/DG/19
Hirschmann	920287A (locking system)	097/ARCEP/DG/19
Hirschmann	920287B (locking system)	098/ARCEP/DG/19
HUF	HUF4761 (locking system)	053/ARCEP/DG/19
LEOPOLD KOSTAL	KK1 (locking system)	037/ARCEP/DG/19
MARQUARDT	DC12A (locking system)	010/ARCEP/DG/19
MARQUARDT	DC12B (locking system)	008/ARCEP/DG/19
MARQUARDT	DC12K (locking system)	009/ARCEP/DG/19
MARQUARDT	MS2 (locking system)	014/ARCEP/DG/19

Manufacturer	Model designation	Radio equipment approval number
MARQUARDT	MS4 (locking system)	HOMO-0096/ARCEP/DG/2019
MARQUARDT	MK1 (locking system)	034/ARCEP/DG/19
MARQUARDT	MK2 (locking system)	035/ARCEP/DG/19
MARQUARDT	3350.38 (locking system)	015/ARCEP/DG/19
MARQUARDT	MU1 (locking system)	HOMO-0095/ARCEP/DG/2019

Nigeria

Regulatory radio identification

Manufacturer	Model designation
ADC	ARS4-A (radar sensor)
ADC	ARS4-C (radar sensor)
Bosch	FR5CPCCF (radar sensor)
Bosch	MRR1Rear (radar sensor)
Bosch	MRRe14FCR (radar sensor)
Continental Antenna	RKE213E1 (aerial amplifier)
Continental Antenna	RKE223E1GNS (aerial amplifier)
Continental Automotive	CMKG1 (locking system)

Manufacturer	Model designation
Continental Automotive	MARS Keyless (locking system)
HELLA	DM4 (locking system)
Hirschmann	920287A (locking system)
Hirschmann	920287B (locking system)
Hirschmann	920702A (locking system)
HUF	HUF13145 (locking system)
HUF	HUF14632 (locking system)
HUF	HUF4761 (locking system)
LEOPOLD KOSTAL	KK1 (locking system)

Manufacturer	Model designation
MARQUARDT	DC12A (locking system)
MARQUARDT	DC12B (locking system)
MARQUARDT	DC12K (locking system)
MARQUARDT	MS2 (locking system)
MARQUARDT	MS4 (locking system)
MARQUARDT	MS5 (locking system)
MARQUARDT	MK1 (locking system)
MARQUARDT	MK2 (locking system)
MARQUARDT	3350.38 (locking system)
Schrader	AG3PF4 (tyre pressure sensor)

Manufacturer	Model designation
Schrader	BG3FP4 (tyre pressure sensor)
Schrader	MFR3 (control unit)
Veoneer	77V12BSM (radar sensor)
Veoneer	77V12CRN (radar sensor)
Veoneer	77V125CRN (radar sensor)
WITTE-Velbert	SDHTAG3NFC (locking system)

Oman

Regulatory radio identification

Manufacturer	Model designation	Radio equipment approval number
ADC	ARS4-A (radar sensor)	TRA/TA-R/2016/14 D080134
ADC	ARS4-C (radar sensor)	TRA/TA-R/7769/19 D172338
Bosch	FR5CPCCF (radar sensor)	TRA/TA-R/7983/19 D172338
Bosch	LRR3 (radar sensor)	TRA/TA-R/1049/09
Bosch	MRR1Rear (radar sensor)	TRA/TA-R/1849/14

Manufacturer	Model designation	Radio equipment approval number
Bosch	MRRe14FCR (radar sensor)	TRA/TA-R/4353/17
Continental Antenna	RKE213E1 (aerial amplifier)	TRA/TA-R/2715/15 D090258
Continental Antenna	RKE223E1GNS (aerial amplifier)	TRA/TA-R/8337/19 D172338
Continental Automotive	CMKG1 (locking system)	TRA/TA-R/8642/19 D172338
Continental Automotive	CMKG2 (locking system)	TRA/TA-R/15164/23 D100428

Manufacturer	Model designation	Radio equipment approval number
Continental Automotive	MARS Keyless (locking system)	TRA/TA-R/4158/17 D080134
HELLA	DM4 (locking system)	TRA/TA-R/4548/17 D080134
Hirschmann	920287A (locking system)	TRA/TA-R/0210/11 D080353
Hirschmann	920287B (locking system)	TRA/TA-R/0655/12 D080353
Hirschmann	920702A (locking system)	TRA/TA-R/13300/22 D172338

Manufacturer	Model designation	Radio equipment approval number
Huf Baolong	TSSRE4A (tyre pressure sensor)	TRA/TA-R/4516/17 D100428
Huf Baolong	TSSSG4G6b (tyre pressure sensor)	TTRA/TA-R/7506/19
HUF	HUF13145 (locking system)	TRA/TA-R/13465/22
HUF	HUF14632 (locking system)	TRA/TA-R/2665/15
HUF	HUF4761 (locking system)	TRA/TA-R/0920/12
LEOPOLD KOSTAL	KK1 (locking system)	TRA/TA-R/3129/16

Manufacturer	Model designation	Radio equipment approval number
MARQUARDT	DC12A (locking system)	TRA/TA-RD/4056/17 D100428
MARQUARDT	DC12B (locking system)	TRA/TA-R/0227/11 D080353
MARQUARDT	DC12K (locking system)	TRA/TA-R/0228/11 D080353
MARQUARDT	MS2 (locking system)	TRA/TA-R/4136/17 D080134
MARQUARDT	MS4 (locking system)	TRA/TA-R/7316/19 D172249

Manufacturer	Model designation	Radio equipment approval number
MARQUARDT	MS5 (locking system)	TRA/TA-R/9324/20 D100428
MARQUARDT	MK1 (locking system)	TRA/TA-R/2848/15 D080353
MARQUARDT	MK2 (locking system)	TRA/TA-R/2900/15 D080353
MARQUARDT	3350.38 (locking system)	TRA/TA-R/7051/19 D172249
Schrader	AG5SP4 (tyre pressure sensor)	TTRA R/2380/15 D080134

Manufacturer	Model designation	Radio equipment approval number
Schrader	AG3PF4 (tyre pressure sensor)	TRA R/7287/19 D172338
Schrader	BG3FP4 (tyre pressure sensor)	TRA/TA-R/10694/20 D172338
Schrader	MFR (tyre pressure monitoring system control unit)	TRA/TA-R/7464/19 D090258
Schrader	MFR3 (tyre pressure monitoring system control unit)	TRA/TA-R/7467/19 D090258

Manufacturer	Model designation	Radio equipment approval number
Schrader	GG4T (tyre pressure sensor)	TRA/TA-R/4686/17 D080134
Schrader	DG6W2D4 (tyre pressure sensor)	TRA/TA-R/5511/18 D172249
Sennheiser	M3IETW2R (Earbud)	TRA/TA-R/10988/21
Sennheiser	BTT100 (Bluetooth Audio Transmitter)	TRA/TA-R/10976/21
Veoneer	77GHz MMRV1 (radar sensor)	TRA/TA-R/2706/15
Veoneer	77V12BSM (radar sensor)	TRA/TA-R/7706/19 D172338

Manufacturer	Model designation	Radio equipment approval number
Veoneer	77V12CRN (radar sensor)	TRA/TA-R/7707/19 D172338
Veoneer	77V125CRN (radar sensor)	TRA/TA-R/11335/21 D172338
WITTE-Velbert	SDHTAG3NFC (locking system)	TRA/TA-R/9150/20

Pakistan

Regulatory radio identification

Manufacturer	Model designation	Radio equipment approval number
ADC	ARS4-A (radar sensor)	TAC NO: 9.9014/2019
ADC	ARS4-C (radar sensor)	TAC NO: 9.9389/2019
Bosch	FR5CPCCF (radar sensor)	TAC NO: 9.198/2020
Continental Antenna	RKE213E1 (aerial amplifier)	TAC NO: 9.142/2016

Manufacturer	Model designation	Radio equipment approval number
Continental Antenna	RKE223E1GNS (aerial amplifier)	TAC NO: 9.100169/2019
Continental Automotive	CMKG1 (locking system)	TAC NO:9.100175/2019
Continental Automotive	MARS Keyless (locking system)	TAC NO: 9.213/2017
Continental Automotive	D-WMI2020A (control unit)	TAC NO: 9.9836/2019
HELLA	DM4 (locking system)	TAC NO: 9.409/2017

Manufacturer	Model designation	Radio equipment approval number
Hirschmann	920287A (locking system)	TAC NO: 9.845/2013
Hirschmann	920287B (locking system)	TAC NO: 9.846/2013
Hirschmann	920702A (locking system)	TAC NO. 9.412/2022
HUF Baolong	TSSRE4A (tyre pressure sensor)	TAC NO: 9.620/2017

Manufacturer	Model designation	Radio equipment approval number
HUF	HUF14632 (locking system)	TAC NO: 9.598/2015
HUF	HUF4761 (locking system)	TAC NO: 9.790/2013
LEOPOLD KOSTAL	KK1 (locking system)	TAC NO: 9.118/2016
MARQUARDT	DC12A (locking system)	TAC NO: 9.131/2017
MARQUARDT	DC12B (locking system)	TAC NO: 9.829/2013

Manufacturer	Model designation	Radio equipment approval number
MARQUARDT	DC12K (locking system)	TAC NO: 9.830/2013
MARQUARDT	MS2 (locking system)	TAC NO: 9.133/2017
MARQUARDT	MS4 (locking system)	TAC NO: 9.100171/2019
MARQUARDT	MS5 (locking system)	TAC.NO: 9.774/2020
MARQUARDT	MK1 (locking system)	TAC NO: 9.486/2015
MARQUARDT	MK2 (locking system)	TAC NO: 9.497/2015

Manufacturer	Model designation	Radio equipment approval number
Schrader	AG3PF4 (tyre pressure sensor)	TAC NO:9.039/2016
Schrader	AG5SP4 (tyre pressure sensor)	TAC NO:9.9167/2019
Schrader	BG3FP4 (tyre pressure sensor)	TAC NO:9.68/2021
Schrader	GG4T (tyre pressure sensor)	TAC NO:9.538/2017

Manufacturer	Model designation	Radio equipment approval number
Schrader	DG6W2D4 (tyre pressure sensor)	TAC NO: 9.789/2018
Veoneer	77GHz MMRV1 (radar sensor)	TAC NO: 9.9284/2019
Veoneer	77V12BSM (radar sensor)	TAC NO: 9.9391/2019
Veoneer	77V12CRN (radar sensor)	TAC NO: 9.9391/2019

Manufacturer	Model designation	Radio equipment approval number
Veoneer	77V125CRN (radar sensor)	TAC NO: 9.477/2021
WITTE-Velbert	SDHTAG3NFC (locking system)	TAC NO: 9.527/2020

Paraguay

Regulatory radio identification

Manufacturer	Model designation	Radio equipment approval number
ADC	ARS4-A (radar sensor)	2019-05-I-0271
ADC	ARS4-C (radar sensor)	2019-11-I-0602

Manufacturer	Model designation	Radio equipment approval number
Bosch	FR5CPCCF (radar sensor)	2019-09-I-0508
Bosch	MRRe14FCR (radar sensor)	2017-06-I-0000162

Manufacturer	Model designation	Radio equipment approval number
Bosch	MRR1Rear (radar sensor)	2019-05-I-000236
Continental Antenna	RKE213E1 (aerial amplifier)	2021-02-I-00101 y 2016-02-I-0000038

Manufacturer	Model designation	Radio equipment approval number
Continental Antenna	RKE223E1GNS (aerial amplifier)	2019-12-I-0656
Continental Automotive	CMKG1 (locking system)	2020-02-I-0110

Manufacturer	Model designation	Radio equipment approval number
Continental Automotive	MARS Keyless (locking system)	2017-05-I-0000136 y
HELLA	DM4 (locking system)	2022-06-I-0388 y 2017-08-I-0000261

Manufacturer	Model designation	Radio equipment approval number
Hirschmann	920287A (locking system)	2016-5-I-000134 y 2011-06-I-0059
Hirschmann	920287B (locking system)	2017-04-I-0000119 y 2012-05-I-0096

Manufacturer	Model designation	Radio equipment approval number
Hirschmann	920702A (locking system)	2022-03-I-0149
Huf Baolong	TSSRE4A (tyre pressure sensor)	2017-09-I-0000328

Manufacturer	Model designation	Radio equipment approval number
HUF	HUF13145 (locking system)	2022-04-I-0235
HUF	HUF14632 (locking system)	2020-06-I-0284 y 2015-08-I-0000226

Manufacturer	Model designation	Radio equipment approval number
HUF	HUF4761 (locking system)	2017-12-I-0000409 y 2012-10-I-0178
LEOPOLD KOSTAL	KK1 (locking system)	2015-06-I-0000181

Manufacturer	Model designation	Radio equipment approval number
MARQUARDT	DC12A (locking system)	2020-12-I-0898 y 2015-06-I-0000181

Manufacturer	Model designation	Radio equipment approval number
MARQUARDT	DC12B (locking system)	2021-05-I-0304; 2016-5-I-000144 y 2011-06-I-0067

Manufacturer	Model designation	Radio equipment approval number
MARQUARDT	DC12K (locking system)	2021-05-I-0305; 2016-5-I-000143 y 2011-06-I-0068
MARQUARDT	MS2 (locking system)	2017-04-I-0000101

Manufacturer	Model designation	Radio equipment approval number
MARQUARDT	MS4 (locking system)	2019-10-I-0581
MARQUARDT	MS5 (locking system)	2020-08-I-0604

Manufacturer	Model designation	Radio equipment approval number
MARQUARDT	MK1 (locking system)	2020-07-I-0390 y 2015-07-I-0000200
MARQUARDT	MK2 (locking system)	2020-07-I-0391 y 2015-07-I-0000201

Manufacturer	Model designation	Radio equipment approval number
MARQUARDT	3350.38 (locking system)	2019-04-I-000216
Schrader	AG5SP4 (tyre pressure sensor)	2015-04-I-0000150

Manufacturer	Model designation	Radio equipment approval number
Schrader	AG3PF4 (tyre pressure sensor)	2019-05-1-000261
Schrader	BG3FP4 (tyre pressure sensor)	2021-02-I-0063

Manufacturer	Model designation	Radio equipment approval number
Schrader	GG4T (tyre pressure sensor)	2020-02-1-0044
Schrader	DG6W2D4 (tyre pressure sensor)	2019-11-1-0632

Manufacturer	Model designation	Radio equipment approval number
Veoneer	77GHz MMRV1 (radar sensor)	2020-07-I-0510
Veoneer	77V12BSM (radar sensor)	2019-07-I-0399

Manufacturer	Model designation	Radio equipment approval number
Veoneer	77V12CRN (radar sensor)	2019-07-I-0398

Manufacturer	Model designation	Radio equipment approval number
Veoneer	77V125CRN (radar sensor)	2021-04-I-0188
WITTE-Velbert	SDHTAG3NFC (locking system)	2020-06-I-0326

Further specific information

Charging unit for the wireless charging of mobile devices (WMI):

D-WMI2020A:

This vehicle is equipped with the following radio frequency component approved by CONATEL - Paraguay: Wireless interface for mobile devices, Continental brand, model D-WMI2020A, manufactured by Continental Automotive GmbH.

Radio equipment approval number: 2019-11-I-0600

Rear Seat Entertainment System:

DAIRSE:

Importer: Condor S.A.C.I Casa Central, J.B. Gorostiaga 315 y Guaraníes, Asunción, Paraguay, (595 21) 569 7000, sac@condor.com.py

Philippines

Regulatory radio identification

Manufacturer	Model designation	Radio equipment approval number
ADC	ARS4-A (radar sensor)	ESD-1409466 C
ADC	ARS4-C (radar sensor)	ESD-1920226 C
Bosch	FR5CPCCF (radar sensor)	ESD-1920531 C
Bosch	MRR1Rear (radar sensor)	ESD-1408917 C
Bosch	MRRe14FCR (radar sensor)	ESD-1716172 C

Manufacturer	Model designation	Radio equipment approval number
Continental Antenna	RKE213E1 (aerial amplifier)	ESD-1511856 C
Continental Antenna	RKE223E1GNS (aerial amplifier)	ESD-1921015 C
Continental Automotive	CMKG1 (locking system)	ESD-2021556 C
Continental Automotive	CMKG2 (locking system)	ESD-RCE-2332806
Continental Automotive	MARS Keyless (locking system)	ESD-1714865 C

Manufacturer	Model designation	Radio equipment approval number
HELLA	DM4 (locking system)	ESD-1715539 C
Hirschmann	920287A (locking system)	ESD-1105246 C
Hirschmann	920287B (locking system)	ESD-1206044 C
Hirschmann	920702A (locking system)	ESD-RCE-2229632
Huf Baolong	TSSRE4A (tyre pressure sensor)	ESD-1715393 C

Manufacturer	Model designation	Radio equipment approval number
HUF	HUF13145 (locking system)	ESD-RCE-2229722
HUF	HUF14632 (locking system)	ESD-1511236 C
HUF	HUF4761 (locking system)	ESD-1206521 C
LEOPOLD KOSTAL	KK1 (locking system)	ESD-1510698 C
MARQUARDT	DC12A (locking system)	ESD-1714489 C

Manufacturer	Model designation	Radio equipment approval number
MARQUARDT	DC12B (locking system)	ESD-1105216 C
MARQUARDT	DC12K (locking system)	ESD-1105215 C
MARQUARDT	MS2 (locking system)	ESD-1715652 C
MARQUARDT	MS4 (locking system)	ESD-1919133 C
MARQUARDT	MS5 (locking system)	ESD-2022426 C
MARQUARDT	MK1 (locking system)	ESD-1510644 C

Manufacturer	Model designation	Radio equipment approval number
MARQUARDT	MK2 (locking system)	ESD-1510645 C
MARQUARDT	3350.38 (locking system)	ESD-1919198 C
Schrader	AG5SP4 (tyre pressure sensor)	ESD-1715393 C
Schrader	AG3PF4 (tyre pressure sensor)	ESD-1919585 C
Schrader	BG3FP4 (tyre pressure sensor)	ESD-RCE-2124846

Manufacturer	Model designation	Radio equipment approval number
Schrader	GG4T (tyre pressure sensor)	ESD-1715977 C
Schrader	DG6W2D4 (tyre pressure sensor)	ESD-1817081 C
Veoneer	77GHz MMRV1 (radar sensor)	ESD-1510921 C
WITTE-Velbert	SDHTAG3NFC (locking system)	ESD-2022599 C

Zambia

Regulatory radio identification

Manufacturer	Model designation	Radio equipment approval number
Continental Antenna	RKE223E1 (aerial amplifier)	ZMB/ZICTA/TA/2019/3/11
Continental Automotive	MARS Keyless (locking system)	ZMB/ZICTA/TA/2019/3/3
HELLA	DM4 (locking system)	ZMB/ZICTA/TA/2019/3/4
Hirschmann	920287A (locking system)	ZMB/ZICTA/TA/2019/7/12

Manufacturer	Model designation	Radio equipment approval number
Hirschmann	920287B (locking system)	ZMB/ ZICTA/TA/ 2019/7/11
HUF	HUF4761 (locking system)	ZMB/ ZICTA/TA/ 2018/12/18
LEOPOLD KOSTAL	KK1 (locking system)	ZMB/ ZICTA/TA/ 2019/3/48
MARQUARDT	DC12A (locking system)	ZMB/ ZICTA/TA/ 2019/5/16

Manufacturer	Model designation	Radio equipment approval number
MARQUARDT	DC12B (locking system)	ZMB/ ZICTA/TA/ 2019/5/17
MARQUARDT	DC12K (locking system)	ZMB/ ZICTA/TA/ 2019/5/18
MARQUARDT	MS2 (locking system)	ZMB/ ZICTA/TA/ 2018/9/30
MARQUARDT	MS4 (locking system)	ZMB/ ZICTA/TA/ 2019/7/123

Manufacturer	Model designation	Radio equipment approval number
MARQUARDT	MK1 (locking system)	ZMB/ ZICTA/TA/ 2019/3/20
MARQUARDT	MK2 (locking system)	ZMB/ ZICTA/TA/ 2019/3/21
MARQUARDT	3350.38 (locking system)	ZMB/ ZICTA/TA/ 2019/3/6
MARQUARDT	MU1 (locking system)	ZMB/ ZICTA/TA/ 2019/7/124

Serbia

Regulatory radio identification

Manufacturer	Model designation	Radio equipment approval number
ADC	ARS4-A (radar sensor)	И011 20
ADC	ARS4-C (radar sensor)	И011 19
Bosch	FR5CPCCF (radar sensor)	И011 19
Bosch	LRR3 (radar sensor)	И011 19
Bosch	MRR1Rear (radar sensor)	И011 17

Manufacturer	Model designation	Radio equipment approval number
Bosch	MRRe14FCR (radar sensor)	И005 17
Continental Antenna	RKE213E1 (aerial amplifier)	И005 21
Continental Antenna	RKE223E1GNS (aerial amplifier)	И005 22
Continental Automotive	CMKG1 (locking system)	И005 20
Continental Automotive	CMKG2 (locking system)	И005 23

Manufacturer	Model designation	Radio equipment approval number
Continental Automotive	MARS Keyless (locking system)	И005 20
HELLA	DM4 (locking system)	И005 20
Hirschmann	920287A (locking system)	И005 18
Hirschmann	920287B (locking system)	И005 18
Hirschmann	920702A (locking system)	И005 22

Manufacturer	Model designation	Radio equipment approval number
Huf Baolong	TSSRE4A (tyre pressure sensor)	И005 20
HUF	HUF13145 (locking system)	И005 22
HUF	HUF14632 (locking system)	И005 21
HUF	HUF4761 (locking system)	И005 21
LEOPOLD KOSTAL	KK1 (locking system)	И005 18

Manufacturer	Model designation	Radio equipment approval number
MARQUARDT	DC12A (locking system)	И005 20
MARQUARDT	DC12B (locking system)	И005 20
MARQUARDT	DC12K (locking system)	И005 20
MARQUARDT	MS2 (locking system)	И011 17
MARQUARDT	MS4 (locking system)	И005 19
MARQUARDT	MS5 (locking system)	И005 20

Manufacturer	Model designation	Radio equipment approval number
MARQUARDT	MK1 (locking system)	И005 21
MARQUARDT	MK2 (locking system)	И005 21
MARQUARDT	3350.38 (locking system)	И005 22
Meta System	MUW II (interior protection)	И011 19
Schrader	AG5SP4 (tyre pressure sensor)	И005 15

Manufacturer	Model designation	Radio equipment approval number
Schrader	AG3PF4 (tyre pressure sensor)	И005 15
Schrader	BG3FP4 (tyre pressure sensor)	И005 20
Schrader	GG4T (tyre pressure sensor)	И005 17
Schrader	DG6W2D4 (tyre pressure sensor)	И005 18

Manufacturer	Model designation	Radio equipment approval number
Schrader	MC34MA4 (tyre pressure monitoring system control unit)	И011 11
Veoneer	77GHz MMRV1 (radar sensor)	И011 18
Veoneer	77V12BSM (radar sensor)	И011 19
Veoneer	77V12CRN (radar sensor)	И011 19

Manufacturer	Model designation	Radio equipment approval number
Veoneer	77V125CRN (radar sensor)	И038 21
WITTE-Velbert	SDHTAG3NFC (locking system)	И005 20

Singapore

Regulatory radio identification

Manufacturer	Model designation	Radio equipment approval number
		Complies with IMDA Standards
ADC	ARS4-A (radar sensor)	DA103365
ADC	ARS4-C (radar sensor)	DA103365
Bosch	FR5CPCCF (radar sensor)	DA103365
Bosch	LRR3 (radar sensor)	DA103365
Bosch	MRR1Rear (radar sensor)	DA103365
Bosch	MRRe14FCR (radar sensor)	DA103365
Continental Antenna	RKE213E1 (aerial amplifier)	DA105282
Continental Antenna	RKE223E1GNS (aerial amplifier)	DA107248
Continental Automotive	CMKG1 (locking system)	DA103365
Continental Automotive	CMKG2 (locking system)	DB106440
Continental Automotive	MARS Keyless (locking system)	DA105282
Continental Automotive	UWBTRX1 (locking system)	DB107091
Continental Automotive	D-WMI2020A (control unit)	DA103365
Harman Becker	HERMES 3.0 (communication module)	DB107091
HELLA	DM4 (locking system)	DA103365 N3308-22
Hirschmann	920287A (locking system)	DA103365
Hirschmann	920287B (locking system)	DA103365

Manufacturer	Model designation	Radio equipment approval number
Hirschmann	920702A (locking system)	DA105282
HUF Baolong	TSSRE4A (tyre pressure sensor)	DA30668
HUF Baolong	TSSSG4G6b (tyre pressure sensor)	DA28467
HUF	HUF14632 (locking system)	DA105282
HUF	HUF4761 (locking system)	DA103365
LEOPOLD KOSTAL	KK1 (locking system)	DA103365

Manufacturer	Model designation	Radio equipment approval number
MARQUARDT	DC12A (locking system)	DA103787
MARQUARDT	DC12B (locking system)	DA103365
MARQUARDT	DC12K (locking system)	DA103365
MARQUARDT	MS2 (locking system)	DA103787
MARQUARDT	MS4 (locking system)	DA103787
MARQUARDT	MS5 (locking system)	DB107091
MARQUARDT	MK1 (locking system)	DA103365
MARQUARDT	MK2 (locking system)	DA103365

Manufacturer	Model designation	Radio equipment approval number
MARQUARDT	3350.38 (locking system)	DA103787
Meta System	ITS/TPS (interior protection)	DA103365
Meta System	MUW II (interior protection)	DA103365
Schrader	AG5SP4 (tyre pressure sensor)	DA103787
Schrader	AG3PF4 (tyre pressure sensor)	DA107968
Schrader	BG3FP4 (tyre pressure sensor)	DA103365

Manufacturer	Model designation	Radio equipment approval number
Schrader	GG4T (tyre pressure sensor)	DA105282
Schrader	DG6W2D4 (tyre pressure sensor)	DA105282
Veoneer	77GHz MMRV1 (radar sensor)	DA103365
Veoneer	77V12BSM (radar sensor)	DA103365
Veoneer	77V12CRN (radar sensor)	DA103365

Manufacturer	Model designation	Radio equipment approval number
Veoneer	77V125CRN (radar sensor)	DA103365
WITTE-Velbert	SDHTAG3NFC (locking system)	DA107248

South Africa

Regulatory radio identification

Manufacturer	Model designation	Radio equipment approval number
ADC	ARS4-A (radar sensor)	TA-2014/1637
ADC	ARS4-C (radar sensor)	TA-2019/1595
Bosch	FR5CPCCF (radar sensor)	TA-2019/1200
Bosch	MRR1Rear (radar sensor)	TA-2014/212
Bosch	MRRe14FCR (radar sensor)	TA-2017/2013

Manufacturer	Model designation	Radio equipment approval number
Bosch	LRR3 (radar sensor)	TA-2009/464
Continental Antenna	RKE213E1 (aerial amplifier)	TA-2015/1438
Continental Antenna	RKE223E1 (aerial amplifier)	TA-2020/043
Continental Automotive	CMKG1 (locking system)	TA-2019/5405
Continental Automotive	MARS Keyless (locking system)	TA-2016/3500

Manufacturer	Model designation	Radio equipment approval number
Continental Automotive	UWBTRX1 (locking system)	TA-2021/3460
Gentex	MUAHL 5 (convenience system)	TA-2015/1386
HELLA	DM4 (locking system)	TA-2017/2518
Hirschmann	920287A (locking system)	TA-2011/374
Hirschmann	920287B (locking system)	TA-2013/1262

Manufacturer	Model designation	Radio equipment approval number
Hirschmann	920702A (locking system)	TA-2022/0162
Huf Baolong	TSSRE4A (tyre pressure sensor)	TA-2017/1393
Huf Baolong	TSSSG4G6b (tyre pressure sensor)	TA-2019/1440
HUF	HUF13145 (locking system)	TA-2022/0375

Manufacturer	Model designation	Radio equipment approval number
HUF	HUF14632 (locking system)	TA-2015/1077
HUF	HUF4761 (locking system)	TA-2012/1543
LEOPOLD KOSTAL	KK1 (locking system)	TA-2015/595
Meta System	ITS Master (interior protection)	TA-2011/1636
Meta System	ITS Sensor (interior protection)	TA-2011/1227

Manufacturer	Model designation	Radio equipment approval number
Meta System	MUW II (interior protection)	TA-2019/261
MARQUARDT	DC12A (locking system)	TA-2017/312
MARQUARDT	DC12B (locking system)	TA-2011/370
MARQUARDT	DC12K (locking system)	TA-2012/1542
MARQUARDT	MS2 (locking system)	TA-2016/3314
MARQUARDT	MS4 (locking system)	TA-2019/843

Manufacturer	Model designation	Radio equipment approval number
MARQUARDT	MS5 (locking system)	TA-2020/5765
MARQUARDT	MK1 (locking system)	TA-2015/179
MARQUARDT	MK2 (locking system)	TA-2015/180
MARQUARDT	3350.38 (locking system)	TA-2018/3985
Schrader	AG5SP4 (tyre pressure sensor)	TA-2015/072

Manufacturer	Model designation	Radio equipment approval number
Schrader	AG3PF4 (tyre pressure sensor)	TA-2019-133
Schrader	BG3FP4 (tyre pressure sensor)	TA-2020/773
Schrader	MFR (control unit)	TA-2019/273
Schrader	MFR3 (control unit)	TA-2019-273
Schrader	GG4T (tyre pressure sensor)	TA-2017/3884

Manufacturer	Model designation	Radio equipment approval number
Schrader	DG6W2D4 (tyre pressure sensor)	TA-2017/2933
Schrader	MC34MA4 (tyre pressure monitoring system control unit)	TA-2011/1370
Veoneer	77GHz MMRV1 (radar sensor)	TA-2015/2087
Veoneer	77V12BSM (radar sensor)	TA-2019/1380

Manufacturer	Model designation	Radio equipment approval number
Veoneer	77V12CRN (radar sensor)	TA-2019/1382
Veoneer	77V125CRN (radar sensor)	TA-2021/0150
WITTE-Velbert	SDHTAG3NFC (locking system)	TA-2020/055

South Korea

Regulatory radio identification

Manufacturer	Model designation	Radio equipment approval number
Continental Antenna	RKE223E1 (aerial amplifier)	R-C-Ca3-RKE223E1
Huf Baolong	TSSRE4A (tyre pressure sensor)	
HUF	HUF14632 (locking system)	MSIP-CRM-HHF-HUF-14632
Schrader	MFR (control unit)	MSIP-REM-SRD-MFR

Manufacturer	Model designation	Radio equipment approval number
Schrader	MFR3 (control unit)	KCC R-R-SRD-MFR3A
Schrader	MC34MA4 (tyre pressure monitoring system control unit)	KCC-REM-SRD-MRXMC34MA4
Schrader	AG5SP4 (tyre pressure sensor)	MSIP-CRM-SRD-AG5SP4
Schrader	AG3PF4 (tyre pressure sensor)	R-C-SRD-AG3PF4

Manufacturer	Model designation	Radio equipment approval number
Schrader	BG3FP4 (tyre pressure sensor)	R-C-SRD-BG3FP4
Schrader	GG4T (tyre pressure sensor)	MSIP-CRM-SRD-GG4T
Schrader	DG6W2D4 (tyre pressure sensor)	R-CRM-SRD-DG6W2D4

Togo

Regulatory radio identification

Manufacturer	Model designation	Radio equipment approval number
Continental Antenna	RKE223E1 (aerial amplifier)	No. 024/19
Continental Automotive	MARS Keyless (locking system)	No. 040/19
HELLA	DM4 (locking system)	No. 039/19
Hirschmann	920287A (locking system)	No. 089/19
Hirschmann	920287B (locking system)	No. 088/19
HUF	HUF4761 (locking system)	No. 041/19
LEOPOLD KOSTAL	KK1 (locking system)	No. 060/19
MARQUARDT	DC12A (locking system)	No. 055/19
MARQUARDT	DC12B (locking system)	No. 057/19
MARQUARDT	DC12K (locking system)	No. 056/19
MARQUARDT	MS2 (locking system)	No. 008/19
MARQUARDT	MS4 (locking system)	No. 101/19
MARQUARDT	MK1 (locking system)	No. 021/19
MARQUARDT	MK2 (locking system)	No. 022/19
MARQUARDT	3350.38 (locking system)	No. 016/20

Ukraine

Regulatory radio identification

Manufacturer	Model designation	Radio equipment approval number
Continental Antenna	RKE213E1 (aerial amplifier)	UKR.355-123/19
Continental Antenna	RKE223E1GNS (aerial amplifier)	UA.R.TR.052.682-19
Continental Automotive	CMKG1 (locking system)	UA1.001.021175-20-TE
Continental Automotive	MARS Keyless (locking system)	RTS.UKR.355-34/18

Manufacturer	Model designation	Radio equipment approval number
HELLA	DM4 (locking system)	UA.TR.109
Hirschmann	920287A (locking system)	UKR.355-7/20
Hirschmann	920287B (locking system)	UKR.355-8/20
Huf Baolong	TSSRE4A (tyre pressure sensor)	UA 1.001.018568-19-TE

Manufacturer	Model designation	Radio equipment approval number
Huf Baolong	TSSSG4G6b (tyre pressure monitoring system control unit)	UA 1.001.019289-19-TE
HUF	HUF13145 (locking system)	UKR.355-113/19
HUF	HUF14632 (locking system)	UKR.355-113/19
HUF	HUF4761 (locking system)	UA1.001.018653-19-TE

Manufacturer	Model designation	Radio equipment approval number
LEOPOLD KOSTAL	KK1 (locking system)	10094.006682-19
MARQUARDT	DC12A (locking system)	UA.R.TR.052.307-19
MARQUARDT	DC12B (locking system)	UA.R.TR.052.308-19
MARQUARDT	DC12K (locking system)	UA.R.TR.052.309-19
MARQUARDT	MS2 (locking system)	UA1.001.019129-19-TE
MARQUARDT	MS4 (locking system)	UA.R.TR.052.528-19

Manufacturer	Model designation	Radio equipment approval number
MARQUARDT	MS5 (locking system)	632.16-CET
MARQUARDT	MK1 (locking system)	UA1.001.019233-19-TE
MARQUARDT	MK2 (locking system)	UA1.001.019234-19-TE
MARQUARDT	3350.38 (locking system)	UA1.001.018888-19-TE
Schrader	AG5SP4 (tyre pressure sensor)	UA.TR. 032

Manufacturer	Model designation	Radio equipment approval number
Schrader	AG3PF4 (tyre pressure sensor)	UA-TR-001
Schrader	BG3FP4 (tyre pressure sensor)	UA-TR-109
Schrader	GG4T (tyre pressure sensor)	UA.TR. 028

Manufacturer	Model designation	Radio equipment approval number
Schrader	DG6W2D4 (tyre pressure sensor)	UA.TR. 028
WITTE-Velbert	SDHTAG3NFC (locking system)	UA.R.TR.052.120-20

Uzbekistan

Regulatory radio identification

Manufacturer	Model designation
Continental Automotive	RKE213E1 (aerial amplifier)
Continental Automotive	RKE223E1GNS (aerial amplifier)
Continental Automotive	CMKG1 (locking system)
Continental Automotive	CMKG2 (locking system)
Continental Automotive	MARS Keyless (locking system)
HELLA	DM4 (locking system)

Manufacturer	Model designation
Hirschmann	920287A (locking system)
Hirschmann	920287B (locking system)
Hirschmann	920702A (locking system)
HUF	HUF13145 (locking system)
LEOPOLD KOSTAL	KK1 (locking system)
MARQUARDT	DC12A (locking system)
MARQUARDT	DC12B (locking system)

Manufacturer	Model designation
MARQUARDT	DC12K (locking system)
MARQUARDT	MS2 (locking system)
MARQUARDT	MS4 (locking system)
MARQUARDT	MS5 (locking system)
MARQUARDT	MK1 (locking system)
MARQUARDT	MK2 (locking system)
MARQUARDT	3350.38 (locking system)
WITTE-Velbert	SDHTAG3NFC (locking system)

United Arab Emirates

TDRA هيئة تنظيم الاتصالات والحكومة الرقمية
TELECOMMUNICATIONS AND DIGITAL GOVERNMENT REGULATORY AUTHORITY

Regulatory radio identification

Manufacturer	Model designation	Radio equipment approval number
ADC	ARS4-A (radar sensor)	TA RTTE: Er558296/17, DA40068/15
ADC	ARS4-C (radar sensor)	TA RTTE: ER77062/19, DA40068/15

Manufacturer	Model designation	Radio equipment approval number
Bosch	FR5CPCCF (radar sensor)	TA RTTE: ER74533/19, DA36758/14
Continental Antenna	RKE213E1 (aerial amplifier)	TRA ER64693/18, DA65993/17
Continental Antenna	RKE223E1GNS (aerial amplifier)	TRA ER76442/19, DA65993/17
Continental Automotive	CMKG1 (locking system)	TRA ER77964/20, DA0018994/09

Manufacturer	Model designation	Radio equipment approval number
Continental Automotive	CMKG2 (locking system)	TRA ER17713/23, DA36975/14
Continental Automotive	MARS Keyless (locking system)	TRA ER56005/17, DA44932/15
Continental Automotive	UWBTRX1 (locking system)	TRA ER11321/22, DA36975/14
Gentex	MUAHL 5 (convenience system)	TRA ER41849/15, DA35176/14

Manufacturer	Model designation	Radio equipment approval number
Harman Becker	HERMES 3.0 (communication module)	TRA ER03601/21, DA0028019/10
HELLA	DM4 (locking system)	TRA ER56616/17, DA44932/15
Hirschmann	920287A (locking system)	TRA ER52213/17, DA35219/14
Hirschmann	920287B (locking system)	TRA ER42011/15, DA35219/14

Manufacturer	Model designation	Radio equipment approval number
Hirschmann	920702A (locking system)	TRA ER10723/22, DA35219/14
Huf Baolong	TSSRE4A (tyre pressure sensor)	TRA ER57806/17, DA36976/14
Huf Baolong	TSSSG4G6b (tyre pressure monitoring system control unit)	TRA ER7307/19, DA0086237/12
HUF	HUF13145 (locking system)	TRA ER08607/22, DA36976/14

Manufacturer	Model designation	Radio equipment approval number
HUF	HUF14632 (locking system)	TRA ER63716/18, DA36976/14
HUF	HUF4761 (locking system)	TRA ER55496/17, DA36976/14
HUF	HUF13145 (locking system)	TRA ER08607/22 DA36976/14
LEOPOLD KOSTAL	KK1 (locking system)	TRA ER62622/18, DA0105247/13

Manufacturer	Model designation	Radio equipment approval number
MARQUARDT	DC12A (locking system)	TRA ER53465/17, DA0018994/09
MARQUARDT	DC12B (locking system)	TRA ER0067828/11, DA0018994/09
MARQUARDT	DC12K (locking system)	TRA ER0067829/11, DA0018994/09
MARQUARDT	MS2 (locking system)	TRA ER52668/17, DA0018994/09

Manufacturer	Model designation	Radio equipment approval number
MARQUARDT	MS4 (locking system)	TRA ER71616/19, DA0018994/09
MARQUARDT	MS5 (locking system)	TRA ER80720/20, DA0018994/09
MARQUARDT	MK1 (locking system)	TRA ER64145/18, DA0018994/09
MARQUARDT	MK2 (locking system)	TRA ER64146/18, DA0018994/09
MARQUARDT	3350.38 (locking system)	TRA ER69280/19, 0018994/09

Manufacturer	Model designation	Radio equipment approval number
Schrader	AG5SP4 (tyre pressure sensor)	TRA ER37156/15, DA0047074/10
Schrader	AG3PF4 (tyre pressure sensor)	TRA ER70533/19, DA0047074/10
Schrader	BG3FP4 (tyre pressure sensor)	TRA ER96175/21, DA0047074/10
Schrader	GG4T (tyre pressure sensor)	TRA ER57985/17, DA0047074/10

Manufacturer	Model designation	Radio equipment approval number
Schrader	DG6W2D4 (tyre pressure sensor)	TRA ER960528/18, DA0047074/10
Schrader	MC34MA4 (tyre pressure monitoring system control unit)	TRA ER37066/15, DA0047074/10
Sennheiser	M3IETW2L (Earbud)	ER78231/20
Sennheiser	BTT100 (Bluetooth Audio Transmitter)	ER64728/18

Manufacturer	Model designation	Radio equipment approval number
Veoneer	77GHz MMRV1 (radar sensor)	TA RTTE: ER96352/21; 0020858/10
Veoneer	77V12BSM (radar sensor)	TA RTTE: ER72324/19; 0020858/10

Manufacturer	Model designation	Radio equipment approval number
Veoneer	77V12CRN (radar sensor)	TA RTTE: ER72323/19; 0020858/10

Manufacturer	Model designation	Radio equipment approval number
Veoneer	77V125CRN (radar sensor)	TA RTTE: ER95775/21; 0020858/10
WITTE-Velbert	SDHTAG3NFC (locking system)	TRA ER79695/20, DA0018994/09

United Kingdom

Regulatory radio identification

Manufacturer	Model designation
Continental Antenna	RKE213E1 (aerial amplifier)
Continental Antenna	RKE223E1GNS (aerial amplifier)
Continental Automotive	CMKG1 (locking system)
Continental Automotive	CMKG2 (locking system)
Continental Automotive	MARS Keyless (locking system)

Manufacturer	Model designation
Continental Automotive	UWBTRX1 (locking system)
HUF	HUF13145 (locking system)
Huf Baolong	TSSRE4A (tyre pressure sensor)
HELLA	DM4 (locking system)
Hirschmann	920287A (locking system)
Hirschmann	920287B (locking system)
Hirschmann	920702A (locking system)

Manufacturer	Model designation
LEOPOLD KOSTAL	KK1 (locking system)
MARQUARDT	DC12B (locking system)
MARQUARDT	DC12K (locking system)
MARQUARDT	MK1 (locking system)
MARQUARDT	MK2 (locking system)
MARQUARDT	MS2 (locking system)
MARQUARDT	MS2 (locking system)
MARQUARDT	MS4 (locking system)
MARQUARDT	3350.38 (locking system)

UK CA

Manufacturer	Model designation
Schrader	AG5SP4 (tyre pressure sensor)
Schrader	AG3PF4 (tyre pressure sensor)
Schrader	BG3FP4 (tyre pressure sensor)
Schrader	GG4T (tyre pressure sensor)
Schrader	DG6W2D4 (tyre pressure sensor)
WITTE-Velbert	SDHTAG3NFC (locking system)

Further specific information

Charging unit for the wireless charging of mobile devices (WMI):

D-WMI2016A, D-WMI2017A, D-WMI2017B:

Restrictions or Requirements in the UK: A separation distance of at least 10 cm between all persons and the device must be provided at all times. The Device must not be co-located or operating in conjunction with any other antenna or transmitter.

D-WMI2020A:

Restrictions or Requirements in the UK: A separation distance of at least 0 cm between all persons and the device must be provided at all times. The Device must not be co-located or operating in conjunction with any other antenna or transmitter.

United States

Regulatory radio identification

Manufacturer	Model designation	Radio equipment approval number
Sennheiser	M3IETW2R (Earbud)	FCC ID: DMOM3IETW2R
Sennheiser	M3IETW2L (Earbud)	FCC ID: DMOM3IETW2L
Sennheiser	BTT100 (Bluetooth Audio Transmitter)	FCC ID: DMOBTT100

Information on installation clearances

Charging unit for the wireless charging of mobile devices (WMI):

The charging unit for wireless charging of mobile devices (WMI) complies with FCC and IC radiation exposure limits set forth for an uncontrolled envi-

ronment. This equipment should be installed and operated with a minimum distance of 0 cm (in contact) between the source of radiation and your body. This transmitter must not be placed in the same location as or used at the same time as another transmitter or antenna.

Rear Seat Entertainment System:

USA: "This device complies with part 15 of the FCC Rules and Industry Canada licence-exempt RSS standard(s). Operation is subject to the following two conditions: (1) This device must not cause any harmful interference, and (2) this device must accept any interference received, including interference that may cause undesired operation.

Changes or modifications not expressly approved by the party responsible for compliance could void the user's authority to operate the equipment.

This device must be installed and used at a distance of at least 6 cm from the body."

Canada: "This device complies with ISED Canada licence-exempt RSS standard(s). Operation is subject to the following two conditions: (1) This device must not cause interference, and (2) this device must accept any interference received, including interference that may cause undesired operation of the device.

This equipment complies with ISED radiation exposure limits established for an uncontrolled environment. This equipment must be installed and operated with a minimum distance of 5 cm between the radiation source and your body."

Radar sensors:

ARS4-C (ADC), ARS4-B (ADC), ARS4-A (ADC), FR5CPCCF (Bosch), MRR1REAR (Bosch), MRREVO14F (Bosch), LRR3 (Bosch), 77V12BSM (Veoneer), 77V12CRN (Veoneer), MMRV1 (Veoneer)

USA only: Information on exposure to high-frequency radiation:

This equipment complies with FCC radiation exposure limits established for an uncontrolled environment. This equipment must be installed and operated with a minimum distance of 20 cm between the radiation source and your body.

This transmitter must not be placed in the same location as or used at the same time as another antenna or transmitter.

Canada only: This equipment should be installed and operated with a minimum distance of 20 cm between the radiation source and your body.

BT Audio Transmitter (BTT100):

This equipment complies with FCC and IC radiation exposure limits established for an uncontrolled environment. This equipment must be installed and operated with a minimum distance of 9 cm between the radiation source and your body.

This transmitter must not be placed in the same location as or used at the same time as another antenna or transmitter.

Vietnam

Regulatory radio identification

Manufacturer	Model designation	Radio equipment approval number
ADC	ARS4-A (radar sensor)	Mercedes-Benz Vietnam Company Limited
ADC	ARS4-C (radar sensor)	Mercedes-Benz Vietnam Company Limited
Bosch	FR5CPCCF (radar sensor)	Mercedes-Benz Vietnam Company Limited
Bosch	MRR1Rear (radar sensor)	Mercedes-Benz Vietnam Company Limited
Bosch	MRRe14FCR (radar sensor)	Mercedes-Benz Vietnam Company Limited
Continental Antenna	RKE213E1 (aerial amplifier)	Suntech Vietnam Technology Company Limited C0274151118AF04A2
Continental Antenna	RKE223E1GNS (aerial amplifier)	Suntech Vietnam Technology Company Limited B1522011121AF04A3
Continental Automotive	CMKG1 (locking system)	Suntech Vietnam Technology Company Limited C0001070120AF04A2

Manufacturer	Model designation	Radio equipment approval number
Continental Automotive	MARS Keyless (locking system)	Mercedes-Benz Vietnam Company Limited B0748240419AF04A2
HELLA	DM4 (locking system)	Mercedes-Benz Vietnam Company Limited CO204030321AF04A3

Manufacturer	Model designation	Radio equipment approval number
Hirschmann	920702A (locking system)	Mercedes-Benz Vietnam Company Limited B0424070422AF04A3
Huf Baolong	TSSRE4A (tyre pressure sensor)	C0112200717AF04A2
HUF	HUF13145 (tyre pressure sensor)	C1071050922AF04A3

Manufacturer	Model designation	Radio equipment approval number
LEOPOLD KOSTAL	KK1 (locking system)	Mercedes-Benz Vietnam Company Limited C0313140421AF0403
MARQUARDT	DC12A (locking system)	Suntech Vietnam Technology Company Limited C0208030321AF04A3

Manufacturer	Model designation	Radio equipment approval number
MARQUARDT	DC12B (locking system)	Suntech Vietnam Technology Company Limited C007621012 1AF04A3
MARQUARDT	DC12K (locking system)	Suntech Vietnam Technology Company Limited C007721012 1AF04A3

Manufacturer	Model designation	Radio equipment approval number
MARQUARDT	MS2 (locking system)	Suntech Vietnam Technology Company Limited C007521012 1AF04A3
MARQUARDT	MS4 (locking system)	Suntech Vietnam Technology Company Limited C091311082 1AF04A3

Manufacturer	Model designation	Radio equipment approval number
MARQUARDT	MS5 (locking system)	Suntech Vietnam Technology Company Limited C014114052 0AF04A2
MARQUARDT	MK1 (locking system)	Suntech Vietnam Technology Company Limited C004915012 1AF04A3

Manufacturer	Model designation	Radio equipment approval number
MARQUARDT	MK2 (locking system)	Suntech Vietnam Technology Company Limited C0050150121AF04A3
MARQUARDT	3350.38 (locking system)	Suntech Vietnam Technology Company Limited C0131030221AF04A3

Manufacturer	Model designation	Radio equipment approval number
Schrader	AG5SP4 (tyre pressure sensor)	Suntech Vietnam Technology Company Limited C0002050119AF042A
Schrader	AG3PF4 (tyre pressure sensor)	Suntech Vietnam Technology Company Limited C0120220519AF04A2

Manufacturer	Model designation	Radio equipment approval number
Schrader	GG4T (tyre pressure sensor)	Suntech Vietnam Technology Company Limited C0170191017AF04A2
Schrader	DG6W2D4 (tyre pressure sensor)	Suntech Vietnam Technology Company Limited C0078070518AF04A2

Manufacturer	Model designation	Radio equipment approval number
Veoneer	77GHz MMRV1 (radar sensor)	Mercedes-Benz Vietnam Company Limited
Veoneer	77V12BSM (radar sensor)	Mercedes-Benz Vietnam Company Limited
Veoneer	77V12CRN (radar sensor)	Mercedes-Benz Vietnam Company Limited

Manufacturer	Model designation	Radio equipment approval number
Veoneer	77V125CRN (radar sensor)	Mercedes-Benz Vietnam Company Limited
WITTE-Velbert	SDHTAG3NFC (locking system)	Mercedes-Benz Vietnam Company Limited A084713082 0AF04A3

Information about the specific absorption rate (SAR)

Information about the specific absorption rate
The values have been determined and tested in accordance with the Décret n° 2019-1186 guideline regarding the indication of the specific absorption rate (SAR) of wireless vehicle components.

Further information and updates are available at the following web address:

https://regulatoryradioinformation.corpinter.net/en

Information about the specific absorption rate

Vehicle components	SAR value in W/kg	Applicable limit value
ECE DE003 & ECE DE004 compensators	< 0.2 W/kg	2 W/kg
DAI RSE	1.8 W/kg	2 W/kg
D-WMI2020A	0.018 W/kg	4 W/kg
HERMES communication module	< 0.4 W/kg	2 W/kg
RAMSES communication module	0.036 W/kg	2 W/kg
NRCS2P	0.003 W/kg	2 W/kg
NTG6	0.199 W/kg	4 W/kg
NTG7	0.08 W/kg	2 W/kg
NTG7RSU	0.07 W/kg	2 W/kg
Gen20x.i2 LS3+	2,2 W/kg	4 W/kg
Gen20x.i2 LS4+	2,5 W/kg	4 W/kg
SM-T230NZ tablet PC	0.7 W/kg	4 W/kg
Radio data transmission telephone system	0.24 W/kg	2 W/kg

Importer information for regulatory radio components

For Moldova only:
Importer

S.C. GRAND PREMIUM S.R.L. Moldova

mun. Chisinau, str. Hîncesti sos., 2/2

For Turkey only:
Importer

Mercedes Benz Otomotiv Ticaret ve Hizmetler A.Ş. Genel Merkez

Akçaburgaz Mah. Süleyman Şah Cad. No: 6/1

34522 Esenyurt/İstanbul

For Ukraine only:
Importer

PJSC “AUTOCAPITAL”

Velyka Vasylkivska str. 15/2

01004 Kyiv

Ukraine

For the United Kingdom only:
Importer

Mercedes-Benz Cars UK Limited

Delaware Drive, Tongwell

Milton Keynes, MK15 8BA

England

Importer of Mercedes-Benz vans

Mercedes-Benz Vans UK Limited

Delaware Drive, Tongwell

Milton Keynes, MK15 8BA

Importer of Mercedes-Benz spare parts

Mercedes-Benz Parts Logistics

Delaware Drive, Tongwell

Milton Keynes, MK15 8BA

England

Further information and updates are available at the following web address:

https://regulatoryradioinformation.corpinter.net/en

Vehicle identification plate, VIN and engine number overview

Vehicle identification plate

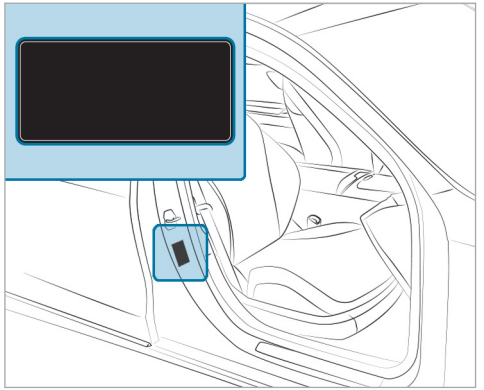

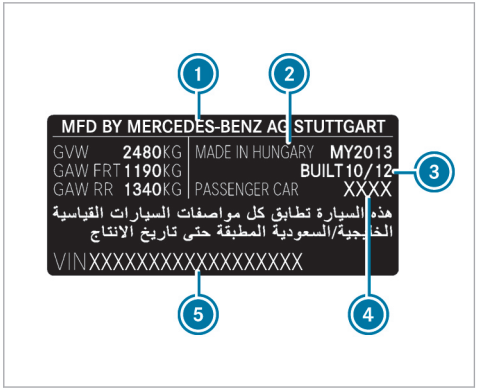

Vehicle identification plate (example: Kuwait)

1. Vehicle manufacturer
2. Place of manufacture
3. Manufacturing date
4. Vehicle model
5. VIN

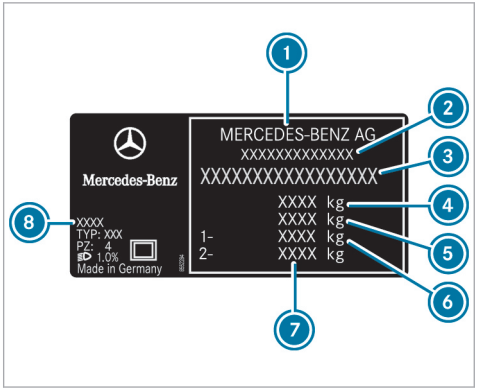

Vehicle identification plate (example: all other countries)

1. Vehicle manufacturer
2. EU general operating permit number (only for certain countries)
3. VIN (vehicle identification number)
4. Maximum permissible gross vehicle weight (kg)

⑤ Maximum permissible gross weight of vehicle combination (kg) (only for certain countries)
⑥ Maximum permissible front axle load (kg)
⑦ Maximum permissible rear axle load (kg)
⑧ Paint code

ⓘ The data shown in the illustration is example data.

VIN and engine number

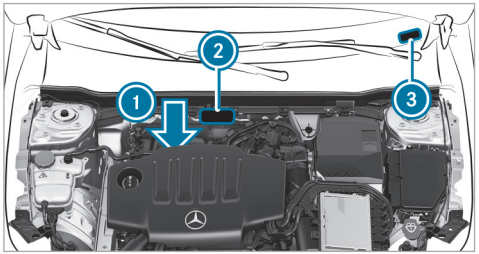

① Engine number stamped into the crankcase
② VIN (vehicle identification number) stamped into the crossmember
③ VIN (vehicle identification number) as a label at the lower edge of the windscreen

Only for certain countries: the VIN as a label at the lower edge of windscreen ③ is only available in some countries. Further information can be obtained at a qualified specialist workshop.

Operating fluids

Notes on operating fluids

⚠ **WARNING** Risk of injury due to harmful operating fluids

Operating fluids can be toxic.

- ▶ When using, storing and disposing of operating fluids, observe the imprints on the respective original containers.
- ▶ Always keep operating fluids in the sealed original container.
- ▶ Always keep children away from operating fluids.

ENVIRONMENTAL NOTE Pollution of the environment due to irresponsible disposal of operating fluids

Incorrect disposal of operating fluids can cause considerable damage to the environment.

- ▶ Dispose of operating fluids in an environmentally responsible manner.

Operating fluids include the following:

- fuels
- DeNOx agent AdBlue® for exhaust gas after-treatment
- lubricants
- Coolant
- Brake fluid
- windscreen washer fluid
- climate control system refrigerant

Only use products approved by Mercedes-Benz. Damage caused by the use of products that have not been approved is not covered by the Mercedes-Benz warranty or goodwill gestures.

The operating fluids approved by Mercedes-Benz can be identified by the following inscriptions on the container:

- MB-Freigabe (e.g. MB-Freigabe 229.51)
- MB-Approval (e.g. MB-Approval 229.51)

Further information on approved operating fluids:

- in the Mercedes-Benz Specifications for Operating Fluids by entering the designation
  - At https://operatingfluids.mercedes-benz.com
- At a qualified specialist workshop

WARNING Risk of fire or explosion from fuel

Fuels are highly flammable.

▶ Fire, naked flames, smoking and creating sparks must be avoided.

▶ Before and during refuelling, switch off the vehicle and, if fitted, the stationary heater.

WARNING Risk of injury from fuels

Fuels are poisonous and hazardous to your health.

▶ Do not swallow fuel or let it come into contact with skin, eyes or clothing.

▶ Do not inhale fuel vapour.

▶ Keep children away from fuel.

▶ Keep doors and windows closed during the refuelling process.

If you or other people come into contact with fuel, observe the following:

▶ Immediately rinse fuel off your skin with soap and water.

▶ If fuel comes into contact with your eyes, immediately rinse them thoroughly with clean water. Seek medical attention immediately.

▶ If you swallow fuel, seek medical attention immediately. Do not induce vomiting.

▶ Change immediately out of clothing that has come into contact with fuel.

Flexible-fuel vehicles can be refuelled with the following fuel types:

- unleaded petrol
- E85 fuel
- a mixture of E85 fuel and unleaded petrol

Flexible-fuel vehicles can be identified by the **Ethanol up to E85** sticker on the inside of the fuel filler flap.

Depending on the country, the fuels you can use in your vehicle may differ from the information in the Owner's Manual. The fuels that have been approved for your vehicle can be found on the instruction label on the inside of the fuel filler flap.

Fuel

Information on fuel quality for vehicles with petrol engines

Observe the notes on operating fluids (→ page 735).

! NOTE Damage caused by the wrong fuel

Even small amounts of the wrong fuel could result in damage to the fuel system, the engine and the emission control system.

▶ Refuel only with unleaded, sulphur-free spark-ignition engine fuel.

Spark-ignition engine fuel can contain up to 25% ethanol by volume.

▶ See the information label on the fuel filler flap for compatible fuels.

You can obtain further information on compatible fuels at a qualified specialist workshop.

You will also find the compatibility marks on the fuel dispensers or pump nozzles suitable for your vehicle throughout Europe.

Never refuel with one of the following fuels:

- Diesel
- Regular petrol with an octane number lower than 91 RON
- Petrol with more than 3% methanol by volume, e.g. M15, M30
- Petrol with metallic additives

If you have accidentally refuelled with the wrong fuel:

▶ Do not switch on the vehicle.

▶ Consult a qualified specialist workshop.

The following compatibility marks for fuel may apply to your vehicle:

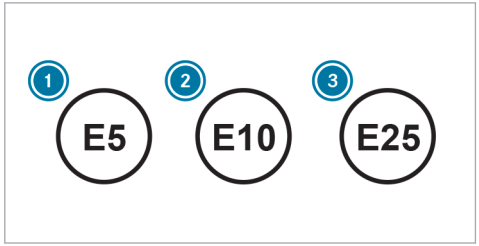

F177 0066 02

1. For petrol with a maximum of 5% ethanol by volume
2. For petrol with a maximum of 10% ethanol by volume
3. For petrol with a maximum of 25% ethanol by volume

If the available fuel is not sufficiently low in sulphur, it may produce unpleasant odours.

The recommended octane number for your vehicle can be found on the information label on the fuel filler flap.

If the recommended fuel is not available, you may also temporarily use regular unleaded petrol with an octane number of at least 91 RON. This may

reduce engine output and increase fuel consumption.

Never refuel using petrol with an even lower RON.

Further information on fuel can be obtained at a filling station or a qualified specialist workshop.

Information on fuel quality for Mercedes-AMG vehicles

Observe the notes on operating fluids (→ page 735).

! NOTE Damage caused by the wrong fuel

Even small amounts of the wrong fuel could result in damage to the fuel system, the engine and the emission control system.

▶ Refuel only with unleaded, sulphur-free spark-ignition engine fuel.

Spark-ignition engine fuel can contain up to 25% ethanol by volume.

▶ See the information label on the fuel filler flap for compatible fuels.

You can obtain further information on compatible fuels at a qualified specialist workshop.

You will also find the compatibility marks on the fuel dispensers or pump nozzles suitable for your vehicle throughout Europe.

Never refuel with one of the following fuels:

- Diesel
- Regular petrol with an octane number lower than 91 RON
- Petrol with more than 3% methanol by volume, e.g. M15, M30
- Petrol with metallic additives

If you have accidentally refuelled with the wrong fuel:

▶ Do not switch on the vehicle.

▶ Consult a qualified specialist workshop.

The following compatibility marks for fuel may apply to your vehicle:

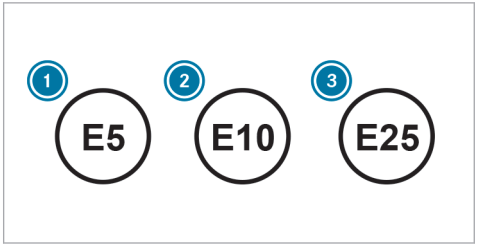

1. For petrol with a maximum of 5% ethanol by volume
2. For petrol with a maximum of 10% ethanol by volume
3. For petrol with a maximum of 25% ethanol by volume

If the available fuel is not sufficiently low in sulphur, it may produce unpleasant odours.

The recommended octane number can be found on the information label on the fuel filler flap (→ page 22).

For maximum engine output: refuel using only super unleaded petrol with an octane number of at least 98 RON. Alternatively, you can also refuel

using premium-grade unleaded petrol with an octane number of at least 95 RON.

In exceptional cases, if the recommended fuel is not available, you may also use regular unleaded petrol with an octane number of at least 91 RON. This may reduce engine output and increase fuel consumption.

Never refuel using petrol with an even lower RON.

Further information on fuel can be obtained at a filling station or a qualified specialist workshop.

Information on additives in petrol (vehicles with petrol engine)

Observe the notes on operating fluids (→ page 735).

! NOTE Damage from use of unsuitable additives

Even small amounts of the wrong additive may lead to malfunctions occurring.

▶ Only add cleaning additives recommended by Mercedes-Benz to the fuel.

Mercedes-Benz recommends that you use brand-name fuels with additives.

In some countries, the fuel available may not have sufficient additives. Deposits could build up in the fuel injection system as a result. In this case, in consultation with a qualified specialist workshop (e.g. a Mercedes-Benz service centre), mix the fuel with the cleaning additive recommended by Mercedes-Benz. Observe the notes and mixing ratios indicated on the tank.

Information on fuel quality for vehicles with a diesel engine

General notes

Observe the notes on operating fluids (→ page 735).

⚠ WARNING Risk of fire from fuel mixture

If you mix diesel fuel with petrol, the flash point of the fuel mixture is lower than that of pure diesel fuel.

▶ Never refuel using petrol in diesel engines.

▶ Never mix petrol with diesel fuel.

! NOTE Damage caused by the wrong fuel

Even small amounts of the wrong fuel could result in damage to the fuel system, the engine and the emission control system.

Vehicles with diesel particulate filter:

▶ Refuel using only sulphur-free diesel fuel. In countries without sulphur-free diesel fuel, refuel using only low-sulphur diesel fuel with a sulphur content of less than 50 ppm.

Vehicles without diesel particulate filter:

▶ Refuel using only diesel fuel with a sulphur content of less than 500 ppm.

Never refuel with one of the following fuels:

- Petrol
- Marine diesel
- Heating oil

- Pure fatty acid methyl ester or vegetable oil
- Paraffin or kerosene

If you have accidentally refuelled with the wrong fuel:

▶ Do not switch on the vehicle.

▶ Consult a qualified specialist workshop.

The following compatibility marks for fuel may apply to your vehicle:

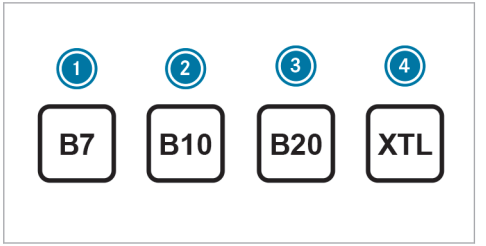

1. For diesel fuel with a maximum of 7% fatty acid methyl ester by volume (bio-diesel)
2. For diesel fuel with a maximum of 10% fatty acid methyl ester by volume (bio-diesel)
3. For diesel fuel with a maximum of 20% fatty acid methyl ester by volume (bio-diesel)
4. For paraffinic diesel fuel

According to European standard EN 16942, you can find the compatibility marks at the following locations:

- On the vehicle, on the information label on the fuel filler flap (→ page 22)
- On the fuel dispensers or pump nozzles suitable for your vehicle throughout Europe

Information on low outside temperatures

Refuel your vehicle with as much winter diesel fuel as possible at the beginning of winter.

Before changing over to winter diesel fuel, the fuel tank should be empty, if possible. When first refuelling with winter diesel fuel, keep the fuel level low, e.g. to reserve level. The fuel tank can be filled as usual when next refuelling.

Further information on fuel can be obtained at a filling station or a qualified specialist workshop.

Tank content and fuel reserve

The total capacity of the fuel tank may vary, depending on the vehicle equipment.

Not for plug-in hybrid:

Total fuel tank capacity

Model	
A 220 d A 220 4MATIC A 250 4MATIC	51.0 litres
All other models	43.0 litres

Fuel tank reserve

Model	
All models	5.0 litres

Plug-in hybrid:

Total fuel tank capacity (plug-in hybrid)

Model	
A 250 e	35.0 litres

Fuel tank reserve (plug-in hybrid)

Model	
A 250 e	5.0 litres

Tank content and fuel reserve (Mercedes-AMG vehicles)

Total fuel tank capacity

Saloon and compact saloon	
All models	51.0 litres

Fuel tank reserve

Saloon and compact saloon	
All models	5.0 litres

AdBlue® (vehicles with a diesel engine only)

Notes on AdBlue®

Observe the notes on operating fluids (→ page 735).

AdBlue® is a water-soluble fluid for the NOx exhaust gas aftertreatment of diesel engines.

It may be improper or punishable in some countries to operate a vehicle that uses no AdBlue® or one that does not comply with the specifications of this Owner's Manual.

! **NOTE** Malfunctions due to the dilution of AdBlue® or the use of additive-enhanced AdBlue®

The function of the NOx exhaust gas aftertreatment can be impaired by the use of unsuitable denoxification agents.

- ▶ Only use AdBlue® in accordance with ISO 22241.
- ▶ Do not dilute AdBlue® with water.
- ▶ Do not use additive-enhanced AdBlue®.

NOTE Damage and malfunctions due to impurities in AdBlue®

Consequences of impurities in AdBlue®:

- increased emission values
- damage to the catalytic converter
- NOx exhaust gas aftertreatment malfunctions

▶ Avoid impurities in AdBlue®.

AdBlue® residues crystallise after a period of time, and contaminate the surfaces with which they come into contact. Clean the dirty surfaces with water as soon as possible.

When you open the AdBlue® tank, small amounts of ammonia vapour may escape. Do not inhale any ammonia vapours that may be released. Only fill the AdBlue® tank in well-ventilated areas.

AdBlue® filling capacity and consumption

Total capacity of AdBlue® tank

Model	Total capacity
All models	23.8 litres

AdBlue® consumption

The average AdBlue® consumption is between 1% and 5% of fuel consumption. Like fuel consumption, AdBlue® consumption is highly dependent upon driving style and operating conditions. For this reason, your vehicle's actual consumption figures in day-to-day operating conditions may differ from the average consumption figures calculated. The frequency at which you will have to top up AdBlue® will also vary. Have the AdBlue® supply checked at a qualified specialist workshop before making journeys outside Europe. Before a longer stay outside Europe, consult a qualified specialist workshop.

AdBlue® fill level and range

The AdBlue® fill level and range can be displayed via the on-board computer. The AdBlue® range shown is highly dependent upon driving style and operating conditions. The actual range may therefore deviate from the range currently displayed in the on-board computer. The information supplied in the Owner's Manual regarding the reserve quantity at the first display warning and the minimum top-up quantity when the fuel tank is empty is also to be understood as guide values.

Engine oil

Notes on engine oil

Observe the notes on operating fluids (→ page 735).

NOTE Engine damage caused by an incorrect oil filter, incorrect oil or additives

- Do not use engine oils or oil filters other than those which meet the specifications necessary for the prescribed service intervals.
- Do not alter the engine oil or oil filter in order to achieve longer change intervals than prescribed.
- Do not use additives.
- Have the engine oil changed after the prescribed intervals.

Mercedes-Benz recommends having the oil changed at a qualified specialist workshop.

Only use engine oils approved for your vehicle by Mercedes-Benz.

Engine oil quality and filling capacity

Not for plug-in hybrid:

Engine oil specification (petrol engines)

Model	MB-Freigabe or MB-Approval
A 180 A 200	229.71, 229.72, 229.81[1)]
All other models	229.71, 229.72[1)]

Engine oil specification (diesel engines)

Model	MB-Freigabe or MB-Approval
All models	229.52, 229.61, 229.71, 229.72[1)]

Plug-in hybrid:

Engine oil specification (plug-in hybrid)

Model	MB-Freigabe or MB-Approval
A 250 e	229.71, 229.72, 229.81[1)]

1) Recommended for the lowest possible fuel consumption (lowest SAE viscosity class in each case; observe possible restrictions of the approved SAE viscosity classes).

To achieve the lowest possible fuel consumption, it is recommended to use the engine oil specifications marked in the table with the lowest SAE viscosity class. Observe any possible restrictions of the approved SAE viscosity classes.

If the engine oils listed in the table are not available, you may add a maximum of 1.0 litre of the following engine oils once only.
Vehicles with petrol engines: MB-Freigabe or MB-Approval 229.51, 229.52, 229.61 or ACEA C5
Plug-in-hybrids: MB-Freigabe or MB-Approval 229.51, 229.52, 229.61 or ACEA C5
Vehicles with diesel engines: MB-Freigabe or MB-Approval 229.51 or ACEA C3

Not for plug-in hybrid:

Engine oil filling capacity

Model	Capacity
A 180 A 200	5.1 litres
A 220 4MATIC A 250 4MATIC	5.0 litres
All other models	6.5 litres

Plug-in hybrid:

Engine oil filling capacity (plug-in hybrid)

Model	Capacity
A 250 e	4.5 litres

The specified filling capacity refers to an oil change with the oil filter.

Engine oil quality and filling capacity (Mercedes-AMG vehicles)

Engine oil specification

Model	MB-Freigabe or MB-Approval
Mercedes-AMG A 35 4MATIC (Saloon) Mercedes-AMG A 35 4MATIC (Compact Saloon)	229.71, 229.72[1)]
Mercedes-AMG A 45 S 4MATIC+ (Compact Saloon)	229.71

1) Recommended for the lowest possible fuel consumption (lowest SAE viscosity class in each case; observe possible restrictions of the approved SAE viscosity classes).

Mercedes-AMG A 45 S 4MATIC+: use only engine oils of viscosity class SAE 0W-20.

To achieve the lowest possible fuel consumption, it is recommended to use the engine oil specifications marked in the table with the lowest SAE viscosity class. Observe any possible restrictions of the approved SAE viscosity classes.

ⓘ If the engine oils listed in the table are not available, you may top up with a maximum of 1.0 l of engine oil with MB-Freigabe or MB-Approval 229.51, 229.52, 229.61 or ACEA C5 once only.

ⓘ Top up the oil level to the maximum before performing extreme changes of direction or using racetrack mode.

Engine oil filling capacity

Model	Capacity
Mercedes-AMG A 35 4MATIC (Saloon) Mercedes-AMG A 35 4MATIC (Compact Saloon)	5.0 litres
Mercedes-AMG A 45 S 4MATIC+ (Compact Saloon)	5.8 litres

The specified filling capacity refers to an oil change with the oil filter.

Notes on brake fluid

Observe the notes on operating fluids (→ page 735).

WARNING Risk of an accident due to vapour pockets forming in the brake system

The brake fluid constantly absorbs moisture from the air. This lowers the boiling point of the brake fluid. If the boiling point is too low, vapour pockets may form in the brake system when the brakes are applied hard.

This impairs the braking effect.

- Have the brake fluid renewed at the specified intervals.

Have the brake fluid regularly replaced at a qualified specialist workshop.

Only use a brake fluid approved by Mercedes-Benz according to MB-Freigabe or MB-Approval 331.0.

Coolant

Notes on coolant

Observe the notes on operating fluids (→ page 735).

WARNING Risk of fire- and injury from antifreeze

If antifreeze comes into contact with hot component parts in the engine compartment, it may ignite.

- Allow the engine to cool down before you top up the antifreeze.
- Make sure that no antifreeze spills out next to the filler opening.
- Thoroughly clean the antifreeze from component parts before starting the vehicle.

NOTE Damage caused by incorrect coolant

- Only use coolant that has been premixed with the required antifreeze protection.

Information on coolant is available at the following locations:

- In the Mercedes-Benz Specification for Operating Fluids 320.1
  - At https://operatingfluids.mercedes-benz.com
- At a qualified specialist workshop

NOTE Overheating at high outside temperatures

If an inappropriate coolant is used, the cooling system is not sufficiently protected against overheating and corrosion at high outside temperatures.

- Only use coolant approved for Mercedes-Benz.

▶ Observe the instructions in the Mercedes-Benz Specifications for Operating Fluids 320.1.

Have the coolant regularly replaced at a qualified specialist workshop.

Proportion of antifreeze concentrate in the cooling system:

- A minimum of 50% (antifreeze protection down to about -37°C)
- A maximum of 55% (antifreeze protection down to -45°C)

Notes on windscreen washer fluid

Observe the notes on operating fluids (→ page 735).

⚠ WARNING - Risk of fire and injury due to windscreen washer concentrate

Windscreen washer concentrate is highly flammable. It could ignite if it comes into contact with hot engine component parts or the exhaust system.

▶ Make sure that no windscreen washer concentrate spills out next to the filler opening.

! NOTE Damage to the exterior lighting due to unsuitable windscreen washer fluid

Unsuitable windscreen washer fluids may damage the plastic surface of the exterior lighting.

▶ Only use windscreen washer fluids which are also suitable for use on plastic surfaces, e.g. MB SummerFit or MB WinterFit.

! NOTE Blocked spray nozzles caused by mixing windscreen washer fluids

▶ Do not mix MB SummerFit and MB WinterFit with other windscreen washer fluids.

Do not use distilled or de-ionised water. Otherwise, the fill level sensor may be triggered erroneously.

Recommended windscreen washer fluid:

- above freezing point: e.g. MB SummerFit
- below freezing point: e.g. MB WinterFit

For the correct mixing ratio, refer to the information on the antifreeze container.

Mix washer fluid with windscreen washer fluid all year round.

Vehicle data

Vehicle dimensions

The heights specified may vary as a result of the following factors:

- Tyres
- Load
- Condition of the suspension
- Special equipment

Not for plug-in hybrid:

Vehicle height

Model	
A 220 d A 220 4MATIC A 250 4MATIC	1451 mm
All other models	1446 mm

Vehicle length

Model	
A 180 d A 200 d A 220 d	4558 mm
A200	4558 mm or 4549 mm
All other models	4549 mm

Vehicle dimensions

All models	
Vehicle width including exterior mirrors	1992 mm
Vehicle width excluding exterior mirrors	1796 mm
Wheelbase	2729 mm

Plug-in hybrid:

Vehicle dimensions (plug-in hybrid)

A 250 e	
Vehicle length	4549 mm
Vehicle width including exterior mirrors	1992 mm
Vehicle width excluding exterior mirrors	1796 mm
Vehicle height	1458 mm
Wheelbase	2729 mm

F177 0066 02

Vehicle dimensions (Mercedes-AMG vehicles)

The heights specified may vary as a result of the following factors:

- Tyres
- Load
- Condition of the suspension
- Optional equipment

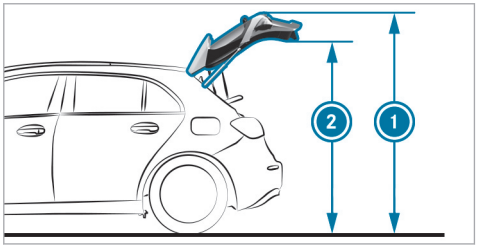

Example (Compact Saloon)

1 Height when open

2 Height

Headroom, saloon

Model	2 Height
Mercedes-AMG A 35 4MATIC	1556 mm

Height when open and headroom, compact saloon

Model	1 Height when open	2 Headroom
Mercedes-AMG A 35 4MATIC	1958 mm	1810 mm
Mercedes-AMG A 45 S 4MATIC+	1966 mm	1819 mm

Vehicle dimensions, saloon

Mercedes-AMG A 35 4MATIC	
Vehicle length	4570 mm
Vehicle width including exterior mirrors	1992 mm
Vehicle width excluding exterior mirrors	1797 mm
Vehicle height	1413 mm
Wheelbase	2729 mm

Vehicle dimensions, compact saloon

Mercedes-AMG A 35 4MATIC	
Vehicle length	4447 mm
Vehicle width including exterior mirrors	1992 mm
Vehicle width excluding exterior mirrors	1797 mm
Vehicle height	1407 mm
Wheelbase	2729 mm
Mercedes-AMG A 45 S 4MATIC+	
Vehicle length	4453 mm
Vehicle width including exterior mirrors	1992 mm
Vehicle width excluding exterior mirrors	1850 mm
Vehicle height	1414 mm
Wheelbase	2729 mm

Weights and loads

Please observe the following notes for the specified vehicle data:

- Items of optional equipment increase the unladen weight and reduce the payload.
- Vehicle-specific weight information can be found on the vehicle identification plate (→ page 734).

Roof load

Model	Maximum roof load
All models	75 kg

Weights and loads (Mercedes-AMG vehicles)

Please observe the following notes for the specified vehicle data:

- Items of optional equipment increase the unladen weight and reduce the payload.
- You will find vehicle-specific weight information on the vehicle identification plate (see the vehicle Owner's Manual).

Roof load

Model	Maximum roof load
All models	75 kg

Maximum design speeds

The maximum design speed can differ from the stated figures in practice. It depends on the operating conditions, the optional equipment and the size of the tyres.

Not for Mercedes-AMG vehicles:
Missing values were not available at the time of going to press.

Maximum design speed

Model	
All models	

Maximum design speeds (Mercedes-AMG vehicles)

The maximum design speed can differ from the stated figures in practice. It depends on the operating conditions, the optional equipment and the size of the tyres.

Mercedes-AMG vehicles:

The following values only apply to vehicles with the AMG Driver's Package.

Missing values were not available at the time of going to press.

Maximum design speed

Model	
Mercedes-AMG A 35 4MATIC (Saloon)	
Mercedes-AMG A 35 4MATIC (Compact Saloon)	
Mercedes-AMG A 45 S 4MATIC+ (Compact Saloon)	

High-voltage battery (plug-in hybrid)

Notes on the power supply for vehicles with high-voltage battery

In accordance with European standard EN 17186:2019, vehicle identifiers are located on the vehicle in the following places:

- On the inside of the socket flap
- On the charging cable connector

In addition, charging stations in European countries are equipped with energy supply identifiers. You can recharge your vehicle at charging stations whose charging station identifier corresponds to the vehicle identifier.

For further information on charging the high-voltage battery, refer to the "Charging the high-voltage battery" section(→ page 273).

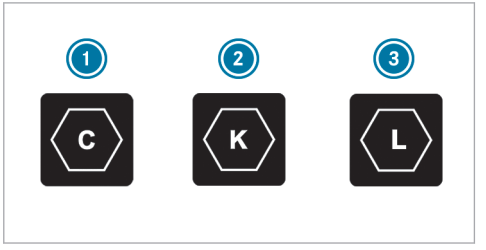

1. Supply type: AC
   Standard: EN 62196-2
   Design: type 2
   Plug type: charging cable socket and vehicle plug
   Voltage range: 480 V RMS

F177 0066 02

2. Supply type: DC
   Standard: EN 62196-3
   Design: FF
   Plug type: charging cable socket and vehicle plug
   Voltage range: 50 V to 500 V
3. Supply type: DC
   Standard: EN 62196-3
   Design: FF
   Plug type: charging cable socket and vehicle plug
   Voltage range: 200 V to 920 V

Missing values were not available at the time of going to press.

Energy content and charging times

A 250 e	
Type	Lithium-ion
Maximum energy content	15.6 kWh

A 250 e	
Range in all-electric mode	
Charging time – mode 4 with 22 kW charging capacity	Approx. 25 min
Charging time – mode 3 with 11 kW charging capacity	Approx. 1 h 15 min
Charging time – mode 3 with 3.7 kW charging capacity[1)]	Approx. 3 h 45 min
Charging time – mode 2 with 1.8 kW charging capacity	Approx. 8 h 15 min

1) Charging possible with a capacity of 7.4 kW (single-phase) with a current of 32 A, results in extended charging time.

–Mode 2 – charging time and mode 3 charging time apply to AC charging from 0 % to 100 % of the usable energy content. Charging time –mode 4 applies to DC charging from 10 % to 80 % of the usable energy content.

The time taken to charge the battery depends on the state of charge of the battery, the ambient temperature and the charging capacity of the battery. The charging capacity, in turn, depends on the supply voltage, the current intensity and the type of power supply.

The nominal voltage range for your vehicle can be found on the information label in the socket cover (→ page 273).

Trailer hitch

General notes on the trailer hitch

Modifications to the cooling system may be necessary, depending on the vehicle model. The retrofitting of a trailer hitch is only permissible if a trailer load is specified in the vehicle documents.

Further information can be obtained at a qualified specialist workshop.

Mounting dimensions of the trailer hitch

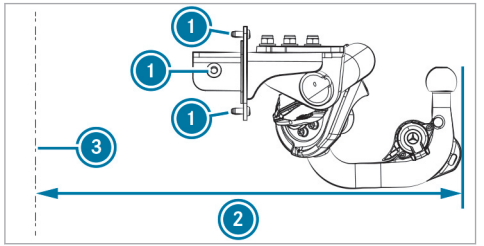

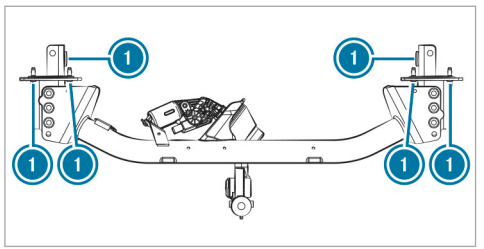

1. Fastening points
2. Overhang dimension
3. Rear axle centre line

The overhang dimension and fastening points are valid for a trailer hitch installed at the factory.

Overhang dimension length

Model	2 Overhang dimension
All models	1013 mm

Trailer load

ⓘ The tongue weight is not included in the trailer load.
The values for the **trailer load, braked** apply with a minimum start-off climbing ability of 12 %.

Not for plug-in hybrid:

Trailer load, braked

Model	
A 180 A 180 d	1400 kg
A 220 4MATIC A 250 4MATIC	1800 kg
All other models	1600 kg

Trailer load, unbraked

Model	
A 180 A 200	725 kg
All other models	750 kg

Trailer load, braked (plug-in hybrid)

Model	
A 250 e	1600 kg

Trailer load, unbraked (plug-in hybrid)

Model	
A 250 e	750 kg

Trailer load (Mercedes-AMG vehicles)

The tongue weight is not included in the trailer load.

Trailer load, braked (at a minimum start-off gradeability of 12 %)

Model	Trailer load, braked
Mercedes-AMG A 35 4MATIC (Saloon and Compact Saloon)	1800 kg
Mercedes-AMG A 45 4MATIC+ (Compact Saloon)	1500 kg

Trailer load, unbraked

Model	Trailer load, unbraked
All models	750 kg

Maximum trailer hitch tongue weight -and load capacity

! **NOTE** Damage caused by the trailer coming loose

If the tongue weight used is too low, the trailer may come loose.

- ▶ The tongue weight must not be below 50 kg.
- ▶ Use a tongue weight that is as close as possible to the maximum permissible tongue weight.

! **NOTE** Damage caused by the bicycle rack coming loose

When using a bicycle rack, both the maximal tongue weight and the maximal load capacity should be observed.

- ▶ Do not exceed the permissible load capacity.

Observe the additional notes on load capacity (→ page 376).

Tongue weight

Model	Maximum tongue weight
All models	80 kg

Load capacity

All models	Maximum load capacity
When attaching the bicycle rack to the ball head	up to 75 kg

Maximum tongue- weight and load capacity (Mercedes-AMG vehicles)

ⓘ Observe the notes:

- on maximum tongue weight and load capacity in the vehicle Owner's Manual (see the "Technical data" section).
- on maximum load capacity in the vehicle Owner's Manual (see "Bicycle rack function" section).

Trailer drawbar load

Saloon and Compact Saloon	Maximum drawbar load
All models	80 kg

Load capacity

Saloon and Compact Saloon	Maximum load capacity
When attaching the bicycle rack to the ball head	up to 75 kg

Permissible rear axle load (trailer operation)

Not for plug-in hybrid:

Trailer operation axle load

Model	Axle load
A180 A200	1040 kg
A 180 d A 200 d	1045 kg
A 220 d	1055 kg
A 220 4MATIC A 250 4MATIC	1075 kg

Plug-in hybrid:

Trailer operation axle load (plug-in hybrid)

Model	Axle load
A 250 e	1190 kg

Permissible axle load, rear axle (Mercedes-AMG vehicles)

Axle load when towing trailer

Model	Axle load
Mercedes-AMG A 35 4MATIC (Saloon)	1100 kg
Mercedes-AMG A 35 4MATIC (Compact Saloon)	1095 kg
Mercedes-AMG A 45 S 4MATIC+ (Compact Saloon)	1085 kg

Display messages

Introduction

Information about display messages

Display messages appear on the driver's display.

Display messages with graphical symbols are simplified in the Owner's Manual and may differ from the symbols on the driver's display. The driver's display shows high-priority display messages in red. Certain display messages are accompanied by a warning tone.

Please act in accordance with the display messages and follow the additional notes in the Owner's Manual.

For some display messages, symbols will also be shown:

- ⓘ Further information
- × Hide display message

With the left-hand Touch Control, you can select the respective symbol by swiping to the left or right. Pressing ⓘ displays further information on the central display. Press the × symbol to hide the display message.

Display messages to be acknowledged can be hidden by pressing the back button ↩ or with the left-hand Touch Control. The display messages will then be stored in the message memory.

Rectify the cause of a display message as quickly as possible.

High-priority display messages cannot be hidden. The driver's display will show these display messages continuously until the cause of the display message has been rectified.

Calling up saved display messages

Driver's display:

→ Service

The Message memory: XXmessage appears on the driver's display.

- ▶ Scroll through the display messages by swiping upwards or downwards on the left-hand Touch Control.
- ▶ **To exit the display:** press the ↩ back button.

Occupant safety

Display messages	Possible causes/consequences and ▶ Solutions
Restraint system malfunction Consult workshop	* The restraint system is malfunctioning (→ page 101). **⚠ WARNING** Risk of injury due to malfunctions in the restraint system Components in the restraint system may be activated unintentionally or not deploy as intended in an accident. ▶ Have the restraint system checked and repaired immediately at a qualified specialist workshop. **Plug-in hybrid:** **⚠ DANGER** Risk of fatal injuries due to restraint system malfunctions Components in the restraint system may be activated unintentionally or not deploy as planned in an accident. In the event of an accident, the high-voltage on-board electrical system may not be deactivated as intended. You may suffer an electric shock if you touch the damaged components of the high-voltage on-board electrical system. ▶ Have the restraint system checked and repaired immediately at a qualified specialist workshop. ▶ After an accident, switch off the vehicle immediately. Recognition of a restraint system fault: • the restraint system warning lamp does not light up when the vehicle is switched on • the restraint system warning lamp lights up continuously or repeatedly during a journey

Display messages	Possible causes/consequences and ▶ Solutions
	▶ Consult a qualified specialist workshop immediately.
 Front left malfunction Consult workshop	* The restraint system is malfunctioning (→ page 101). **⚠ WARNING** Risk of injury due to malfunctions in the restraint system Components in the restraint system may be activated unintentionally or not deploy as intended in an accident. ▶ Have the restraint system checked and repaired immediately at a qualified specialist workshop. **Plug-in hybrid:** **⚠ DANGER** Risk of fatal injuries due to restraint system malfunctions Components in the restraint system may be activated unintentionally or not deploy as planned in an accident. In the event of an accident, the high-voltage on-board electrical system may not be deactivated as intended. You may suffer an electric shock if you touch the damaged components of the high-voltage on-board electrical system. ▶ Have the restraint system checked and repaired immediately at a qualified specialist workshop. ▶ After an accident, switch off the vehicle immediately. Recognition of a restraint system fault: • the restraint system warning lamp does not light up when the vehicle is switched on • the restraint system warning lamp lights up continuously or repeatedly during a journey

Display messages	Possible causes/consequences and ▶ Solutions
	▶ Consult a qualified specialist workshop immediately.
 Front right malfunction Consult workshop	* The restraint system is malfunctioning (→ page 101). **⚠ WARNING** Risk of injury due to malfunctions in the restraint system Components in the restraint system may be activated unintentionally or not deploy as intended in an accident. ▶ Have the restraint system checked and repaired immediately at a qualified specialist workshop. **Plug-in hybrid:** **⚠ DANGER** Risk of fatal injuries due to restraint system malfunctions Components in the restraint system may be activated unintentionally or not deploy as planned in an accident. In the event of an accident, the high-voltage on-board electrical system may not be deactivated as intended. You may suffer an electric shock if you touch the damaged components of the high-voltage on-board electrical system. ▶ Have the restraint system checked and repaired immediately at a qualified specialist workshop. ▶ After an accident, switch off the vehicle immediately. Recognition of a restraint system fault: • the restraint system warning lamp does not light up when the vehicle is switched on • the restraint system warning lamp lights up continuously or repeatedly during a journey

Display messages	Possible causes/consequences and ▶ Solutions
	▶ Consult a qualified specialist workshop immediately.
 Second row of seats, left Malfunction Consult workshop	* The restraint system is malfunctioning (→ page 101). **⚠ WARNING** Risk of injury due to malfunctions in the restraint system Components in the restraint system may be activated unintentionally or not deploy as intended in an accident. ▶ Have the restraint system checked and repaired immediately at a qualified specialist workshop. Plug-in hybrid: **⚠ DANGER** Risk of fatal injuries due to restraint system malfunctions Components in the restraint system may be activated unintentionally or not deploy as planned in an accident. In the event of an accident, the high-voltage on-board electrical system may not be deactivated as intended. You may suffer an electric shock if you touch the damaged components of the high-voltage on-board electrical system. ▶ Have the restraint system checked and repaired immediately at a qualified specialist workshop. ▶ After an accident, switch off the vehicle immediately. Recognition of a restraint system fault: • the restraint system warning lamp does not light up when the vehicle is switched on • the restraint system warning lamp lights up continuously or repeatedly during a journey

Display messages	Possible causes/consequences and ▶ Solutions
	▶ Consult a qualified specialist workshop immediately.
 Second row of seats, right Malfunction Consult workshop	* The restraint system is malfunctioning (→ page 101). **⚠ WARNING** Risk of injury due to malfunctions in the restraint system Components in the restraint system may be activated unintentionally or not deploy as intended in an accident. ▶ Have the restraint system checked and repaired immediately at a qualified specialist workshop. **Plug-in hybrid:** **⚠ DANGER** Risk of fatal injuries due to restraint system malfunctions Components in the restraint system may be activated unintentionally or not deploy as planned in an accident. In the event of an accident, the high-voltage on-board electrical system may not be deactivated as intended. You may suffer an electric shock if you touch the damaged components of the high-voltage on-board electrical system. ▶ Have the restraint system checked and repaired immediately at a qualified specialist workshop. ▶ After an accident, switch off the vehicle immediately. Recognition of a restraint system fault: • the restraint system warning lamp does not light up when the vehicle is switched on • the restraint system warning lamp lights up continuously or repeatedly during a journey

Display messages	Possible causes/consequences and ▶ Solutions
	▶ Consult a qualified specialist workshop immediately.
 Left window airbag malfunction Consult workshop	* The restraint system is malfunctioning (→ page 101). ⚠ **WARNING** Risk of injury or fatal injury due to a malfunction in the windowbag The windowbag might be triggered unintentionally or might not be triggered at all in the event of an accident. ▶ Have the windowbag checked and repaired immediately at a qualified specialist workshop. ▶ Consult a qualified specialist workshop immediately.
 Right window airbag malfunction Consult workshop	* The restraint system is malfunctioning (→ page 101). ⚠ **WARNING** Risk of injury or fatal injury due to a malfunction in the windowbag The windowbag might be triggered unintentionally or might not be triggered at all in the event of an accident. ▶ Have the windowbag checked and repaired immediately at a qualified specialist workshop. ▶ Consult a qualified specialist workshop immediately.
Front passenger airbag disabled See Owner's Manual	* The front passenger airbag has been disabled even though an adult or a person of adult build is on the front passenger seat. If additional forces are applied to the seat, the weight the system detects may be too low.

Display messages	Possible causes/consequences and ▶ Solutions
	⚠ **WARNING** - Risk of injury or even fatal injury when the front passenger airbag is disabled If the front passenger airbag is disabled, It will not be deployed in the event of an accident and cannot perform its intended protective function. A person in the front passenger seat could then, for example, come into contact with the vehicle interior, especially if the person is sitting too close to the dashboard. ▶ Be aware of the status of the front passenger airbag both before and during the journey. ▶ Stop the vehicle immediately in accordance with the traffic conditions. ▶ Make sure that no objects are trapped under the front passenger seat. ▶ Check the status of automatic front passenger airbag shutoff (→ page 103). ▶ If necessary, consult a qualified specialist workshop immediately.
Front passenger airbag enabled See Owner's Manual	* The front passenger airbag will be enabled while the vehicle is in motion in the following situations: • even when a child, a small adult or an object weighing less than the system weight threshold is located on the front passenger seat • even when the front passenger seat is not occupied The system may detect objects or forces that are adding to the weight applied to the seat.

Display messages	Possible causes/consequences and ▶ Solutions
	⚠ **WARNING** Risk of injury or death when using a child restraint system while the front passenger airbag is enabled If you secure a child in a child restraint system on the front passenger seat and the front passenger airbag is enabled, the front passenger airbag can deploy in the event of an accident. The child could be struck by the airbag. ▶ Ensure, both before and during the journey, that the status of the front passenger airbag is correct. NEVER use a rearward facing child restraint on a seat protected by an ACTIVE AIRBAG in front of it, DEATH or SERIOUS INJURY to the CHILD can occur. ▶ Stop the vehicle immediately in accordance with the traffic conditions. ▶ Make sure that no objects are trapped under the front passenger seat. ▶ Check the status of automatic front passenger airbag shutoff (→ page 103). ▶ If necessary, consult a qualified specialist workshop immediately.
Occupant presence reminder inoperative	* The occupant presence reminder is malfunctioning ▶ Consult a qualified specialist workshop.

Display messages	Possible causes/consequences and ▶ Solutions
Do not leave persons or animals in the vehicle	* The occupant presence reminder suspects that there are persons or animals in the rear of the vehicle. ▶ Do not leave any persons or animals behind when leaving the vehicle.

Key

Display messages	Possible causes/consequences and ▶ Solutions
Replace key	* Have the key replaced. ▶ Consult a qualified specialist workshop.
Change key batteries	* The key battery is discharged. ▶ Replace the battery (→ page 144).

Display messages	Possible causes/consequences and ▶ Solutions
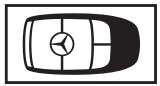 Key not detected (white display message)	* The key is currently undetected. ▶ Change the location of the key in the vehicle. ▶ Try to start the vehicle. ▶ If the key is still not detected, place it in the slot for starting with the key (→ page 234). ▶ Start the vehicle.
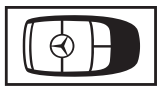 Key not detected (red display message)	* The key can no longer be detected during a journey and may no longer be in the vehicle. If the key is no longer in the vehicle and you switch off the vehicle: • You can no longer start the vehicle. • You cannot centrally lock the vehicle. ▶ Ensure that the key is in the vehicle. If the key is in the vehicle and is still not detected: ▶ Stop the vehicle immediately in accordance with the traffic conditions. ▶ Place the key in the slot for starting the engine with the key (→ page 234). The key battery is weak or discharged. ▶ Check the battery using the indicator lamp (→ page 141). ▶ Replace the key battery, if necessary (→ page 144).

Display messages	Possible causes/consequences and ▶ Solutions
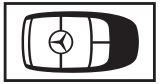 Key being taught in Please wait	* The vehicle is processing in order to teach in the new key. ▶ Wait until processing is complete.
Place the key in the marked space See Owner's Manual	* Key detection is malfunctioning. ▶ Change the location of the key in the vehicle. ▶ Place the key in the slot for starting the engine with the key (→ page 234).

Lights

Display messages	Possible causes/consequences and ▶ Solutions
Malfunction See Owner's Manual	* The exterior lighting is malfunctioning. ▶ Consult a qualified specialist workshop. * **Vehicles with a trailer hitch:** a fuse may have blown. ▶ Stop the vehicle in accordance with the traffic conditions. ▶ Check the fuses and replace them if necessary (→ page 52).

Display messages	Possible causes/consequences and ▶ Solutions
Automatic driving lights inoperative	* The light sensor for automatic driving lights is malfunctioning. ▶ Consult a qualified specialist workshop.
Active Light System inoperative	* The active headlamps are malfunctioning. ▶ Consult a qualified specialist workshop.
Switch on headlamps	* You are driving without low-beam headlamps. ▶ Turn the light switch to the [≡D] or [AUTO] position.
Switch off lights	* You are leaving the vehicle and the lights are still switched on. ▶ Turn the light switch to the [AUTO] position.

Display messages	Possible causes/consequences and ▶ Solutions
Dynamic low beam inoperative	* The dynamic low beam is malfunctioning. The lighting system continues to function properly without the functions of the Dynamic Light System. ▶ Consult a qualified specialist workshop.
Adaptive Highbeam Assist currently unavailable See Owner's Manual	* Adaptive Highbeam Assist is temporarily unavailable. The system limits have been reached (→ page 204). Once the cause of the problem is no longer present, the system will be available again. The Adaptive Highbeam Assist available again display message will appear. ▶ Drive on ▶ Operate the high beam manually until Adaptive High Beam Assist is available again.
Adaptive Highbeam Assist inoperative	* Adaptive Highbeam Assist is malfunctioning. ▶ Drive on or ▶ Stop the vehicle in accordance with the traffic conditions and restart the vehicle. ▶ If the display message does not disappear: consult a qualified specialist workshop. ▶ Until then, operate the high beam manually.

Display messages	Possible causes/consequences and ▶ Solutions
Adaptive Highbeam Assist Plus currently unavailable See Owner's Manual	* Adaptive Highbeam Assist Plus is temporarily unavailable. The system limits have been reached (→ page 205). Once the cause of the problem is no longer present, the system will be available again. The Adaptive Highbeam Assist Plus available again display message will appear. ▶ Drive on ▶ Operate the high beam manually until Adaptive High Beam Assist Plus is available again.
Adaptive Highbeam Assist Plus inoperative	* Adaptive Highbeam Assist Plus is malfunctioning. ▶ Drive on or ▶ Stop the vehicle in accordance with the traffic conditions and restart the vehicle. ▶ If the display message does not disappear: consult a qualified specialist workshop. ▶ Until then, operate the high beam manually.
Hazard warning lamp system Malfunction	* The hazard warning lamp switch is malfunctioning. ▶ Consult a qualified specialist workshop.
 Front left parking lights	* The front left parking light is malfunctioning. ▶ Consult a qualified specialist workshop.

Display messages	Possible causes/consequences and ▶ Solutions
Front right parking lights	* The front right parking light is malfunctioning. ▶ Consult a qualified specialist workshop.
Left low beam	* The left low beam is malfunctioning. ▶ Consult a qualified specialist workshop.
Right low beam	* The right low beam is malfunctioning. ▶ Consult a qualified specialist workshop.
Left main beam	* The left high beam is malfunctioning. ▶ Consult a qualified specialist workshop.

Display messages	Possible causes/consequences and ▶ Solutions
Right main beam	* The right high beam is malfunctioning. ▶ Consult a qualified specialist workshop.
Left daytime running lights	* The left daytime running lights are malfunctioning. ▶ Consult a qualified specialist workshop.
Right daytime running lights	* The right-hand daytime running lights are malfunctioning. ▶ Consult a qualified specialist workshop.
Left cornering light	* The left cornering light is malfunctioning. ▶ Consult a qualified specialist workshop.

Display messages	Possible causes/consequences and ▶ Solutions
Right cornering light	* The right cornering light is malfunctioning. ▶ Consult a qualified specialist workshop.
Front left turn signal	* The front left turn signal lamp is malfunctioning. ▶ Consult a qualified specialist workshop.
Rear left turn signal	* The rear left turn signal lamp is malfunctioning. ▶ Consult a qualified specialist workshop.
Front right turn signal	* The front right turn signal lamp is malfunctioning. ▶ Consult a qualified specialist workshop.

Display messages	Possible causes/consequences and ▶ Solutions
Rear right turn signal	* The rear right turn signal lamp is malfunctioning. ▶ Consult a qualified specialist workshop.
Left mirror turn signal	* The turn signal lamp on the left mirror is malfunctioning. ▶ Consult a qualified specialist workshop.
Right mirror turn signal	* The turn signal lamp on the right mirror is malfunctioning. ▶ Consult a qualified specialist workshop.
Left brake lamp	* The left brake light is malfunctioning. ▶ Consult a qualified specialist workshop.

Display messages	Possible causes/consequences and ▶ Solutions
Right brake lamp	* The right brake light is malfunctioning. ▶ Consult a qualified specialist workshop.
Third brake lamp	* The third brake light is malfunctioning. ▶ Consult a qualified specialist workshop.
Left tail light	* The left tail light is malfunctioning. ▶ Consult a qualified specialist workshop.
Right tail light	* The right tail light is malfunctioning. ▶ Consult a qualified specialist workshop.

Display messages	Possible causes/consequences and ▶ Solutions
Reversing light	* The reversing light is malfunctioning. ▶ Consult a qualified specialist workshop.
Rear fog light	* The rear fog light is malfunctioning. ▶ Consult a qualified specialist workshop.
Number plate lamp	* The number plate lamp is malfunctioning. ▶ Consult a qualified specialist workshop.
Trailer left turn signal	* The left turn signal lamp on the trailer is malfunctioning. ▶ Consult a qualified specialist workshop.

Display messages	Possible causes/consequences and ▶ Solutions
Trailer right turn signal	* The right turn signal lamp on the trailer is malfunctioning. ▶ Consult a qualified specialist workshop.
Trailer brake lamp	* The brake light on the trailer is malfunctioning. ▶ Consult a qualified specialist workshop.
Trailer tail light	* A tail light on the trailer is malfunctioning. ▶ Consult a qualified specialist workshop.
Inoperative indicator lamp in driver display. Consult workshop	* An indicator lamp on the driver's display is defective. ▶ Consult a qualified specialist workshop.

Climate control

Display messages	Possible causes/consequences and ▶ Solutions
inoperative See Owner's Man. (stationary heater)	* The stationary heater is temporarily malfunctioning. ▶ When the vehicle is stationary on a level surface and the engine has cooled down, make up to four attempts to switch on the stationary heater, waiting several minutes between each attempt. ▶ If the stationary heater does not switch on, consult a qualified specialist workshop. ⓘ The stationary heater cannot be activated if the outside temperature is above 15°C.
Currently unavailable Battery low	* The on-board electrical system voltage is too low. The stationary heater has switched itself off. ▶ Drive an extended distance until the battery has reached a sufficient charge level again.
Currently unavailable Refuel	* There is too little fuel in the fuel tank. The stationary heater cannot be switched on. ▶ Refuel the vehicle.

Display messages	Possible causes/consequences and ▶ Solutions
Currently unavailable High-voltage battery charging incomplete.	* The high-voltage battery is charging. Pre-entry climate control cannot be switched on. ▶ Wait until the charging process has achieved a minimum state of charge.
Currently unavailable Charge high-voltage battery	* The charge of the high-voltage battery is too low. Pre-entry climate control cannot be switched on. ▶ Charge the high-voltage battery (→ page 273).
Pre-entry climate control via key available again after starting vehicle	* You have attempted to switch on pre-entry climate control more than twice with the vehicle switched off. ▶ Start the vehicle for ten seconds. Pre-entry climate control is operational again.

Display messages	Possible causes/consequences and ▶ Solutions
Pre-entry climate control via key currently unavailable. High-voltage battery low	* The charge of the high-voltage battery is too low. Pre-entry climate control cannot be switched on. ▶ Charge the high-voltage battery (→ page 273). When the high-voltage battery is sufficiently charged, pre-entry climate control will be operational again.

Drive system

Display messages	Possible causes/consequences and ▶ Solutions
Towing not permitted See Owner's Manual	* The drive system is malfunctioning. ▶ Have the vehicle transported only using a transporter or trailer (→ page 589).

Display messages	Possible causes/consequences and ▶ Solutions
 Acoustic presence indicator inoperative	* The sound generator (acoustic vehicle warning system) is malfunctioning. No vehicle noises are being produced. The vehicle may not be heard by other road users. ▶ Drive with particular care. ▶ Consult a qualified specialist workshop.
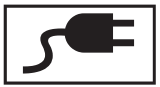 Charger cable connected	* You cannot pull away while the charging cable is connected. ▶ Disconnect the charging cable from the vehicle.
Not possible to unlock charging cable See Owner's Manual	* The charging cable connector cannot be removed from the charging station's socket. ▶ Press the EMERGENCY OFF switch on the charging station. If the charging cable connector cannot be removed after that: ▶ Request service personnel from the operator of the charging station via the emergency call button or the emergency numbers attached to the charging station.
Vehicle not currently being charged Charging station fault	* A malfunction has occurred in the charging station or the RFID card is not recognised. ▶ Start the charging process at a different charging station. or ▶ Have the RFID card checked to ensure it is functioning.

Display messages	Possible causes/consequences and ▶ Solutions
Charging method currently unavailable Please try again or change charging method	* A temporary malfunction has occurred in the charging station. ▶ Wait until the malfunction has passed. or ▶ Start the charging process at a different charging station.
Charging fault Please change charging method See Owner's Manual	* A temporary malfunction has occurred in the charging station. ▶ Wait until the malfunction has passed. or ▶ Start the charging process at a different charging station.
Only electric drive available Power limited	* The fuel tank is empty and the combustion engine is switched off. The output of your vehicle is limited because you are driving in electric mode. ▶ Refuel immediately. Subsequently, there may be temporary restrictions in the availability of electric mode over a driving distance of 50 km. If there is fuel in the vehicle, there is a fault with the combustion engine. ▶ Consult a qualified specialist workshop.
"Electric" drive program currently unavailable	* The state of charge of the high-voltage battery or the environmental conditions are not sufficient for the Electric drive program. ▶ Continue driving and observe the notes on plug-in hybrid operation (→ page 229).

Display messages	Possible causes/consequences and ▶ Solutions
	or ▶ Charge the high-voltage battery (→ page 273).
Reduced drive system performance See Owner's Manual	* The drive system switches to emergency operation mode due to a malfunction. ▶ Drive on carefully. ▶ Consult a qualified specialist workshop.
 Battery overheated Stop, everybody out! Outdoors if possible	* **Plug-in hybrid:** the high-voltage battery is overheated. There is a risk of fire. ▶ Stop the vehicle immediately in accordance with the traffic conditions. ▶ If possible, stop the vehicle in the open air and ensure that all vehicle occupants get out. ⓘ Supporting vehicle functions may activate automatically, e.g. air-recirculation mode as part of climate control. ▶ Do not continue driving. ▶ If smoke is present, leave the danger zone and call the fire service immediately. ▶ Consult a qualified specialist workshop even if there are no external signs of a fire.
 Malfunction	* The drive system is malfunctioning. A warning tone will also sound. ▶ Consult a qualified specialist workshop.

Display messages	Possible causes/consequences and ▶ Solutions
Malfunction Visit workshop	* The drive system is malfunctioning. ▶ Consult a qualified specialist workshop.
Without changing gear, consult workshop	* The drive system cannot be restarted due to a malfunction. If the transmission position is changed using the DIRECT SELECT lever, the drive system will be switched off in park position P or neutral N. ▶ Consult a qualified specialist workshop and do not change the transmission position.
Consult workshop without starting the vehicle again	* It is not possible to restart the drive system due to a malfunction. ▶ Do not switch off the drive system; drive on to the nearest qualified specialist workshop.
Malfunction	* The drive system is malfunctioning. The output of your vehicle is restricted. ▶ Consult a qualified specialist workshop.
Stop Switch off the vehicle	* The drive system is malfunctioning. ▶ Stop the vehicle immediately in accordance with the traffic conditions and switch off the drive system. Do not continue driving, as the drive system is automatically deactivated. ▶ Do not tow the vehicle; stop towing if necessary.

Display messages	Possible causes/consequences and ▶ Solutions
	▶ Consult a qualified specialist workshop.
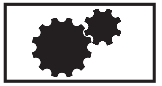 Performance severely limited	* The drive system is outside the normal operating temperature range, e.g. due to extremely low or high outside temperatures. The output is severely restricted. Once the operating temperature of the drive system returns to normal, the full output will be available again. The display message will disappear. * If the drive system power output is still reduced, there is a fault in the drive system. ▶ Drive on carefully. ▶ Consult a qualified specialist workshop.
Please wait Depressurising fuel tank	* **Vehicles with petrol engines:** the pressure in the fuel tank is reduced before the fuel filler flap is opened. This pressure reduction can take up to 15 minutes.
Fuel tank is depressurised Ready for refuelling	* **Vehicles with petrol engines:** the pressure in the fuel tank is released and the fuel filler flap opens.

Display messages	Possible causes/consequences and ▶ Solutions
Tank ventilation Malfunction Consult workshop	* **Vehicles with petrol engines:** There is a malfunction in the fuel system. ▶ Consult a qualified specialist workshop.

Vehicle

Display messages	Possible causes/consequences and ▶ Solutions
	* The driver's display is inoperative due to a failed software update. The display message will be shown every time the engine is started. ⚠ **WARNING** Risk of accident if the driver display fails If the driver display has failed or is malfunctioning, function restrictions in systems relevant to safety cannot be detected. The operating safety of your vehicle may be impaired. ▶ Drive on carefully. ▶ Have the vehicle checked immediately at a qualified specialist workshop.

Display messages	Possible causes/consequences and ▶ Solutions
	If the operating safety of your vehicle is impaired, park the vehicle immediately and safely. Contact a qualified specialist workshop. **Plug-in hybrid:** ⚠ **WARNING** Risk of accident due to failure of the driver display In the event that the driver display fails or malfunctions, you will not recognise function restrictions affecting systems relevant to safety. This may impair operating safety. ▶ Park the vehicle safely as soon as possible and notify a qualified specialist workshop. If the driver's display fails, you may not recognise function restrictions affecting systems relevant to safety or the speed display, for example. The operating safety of the vehicle may be impaired (→ page 440). ▶ Have the vehicle checked by a qualified specialist workshop immediately.
Cannot start vehicle See Owner's Manual	* The vehicle cannot be started. ▶ Switch the vehicle off and switch it back on ▶ If the display message still appears, consult a qualified specialist workshop. * **Vehicles with 48 V on-board electrical system:** the state of charge of the 48 V battery is too low. You can no longer start the vehicle. ▶ Switch off electrical consumers that are not required. ▶ Connect a suitable charger approved for Mercedes-Benz with sufficient charge output to the jump-start connection point of the 12 V battery (→ page 50). The 48 V battery is charged via the voltage converter in the vehicle.

Display messages	Possible causes/consequences and ▶ Solutions
Vehicle is ready to drive Shutdown occurs when locked or automatically in a few minutes	* You are leaving the vehicle in a ready-to-drive state. ▶ Get out of the vehicle, secure it against rolling away and take the key with you. ▶ If you do not leave the vehicle, switch off the electrical consumers, e.g. the seat heating. Otherwise, the 12 V battery may discharge and starting the engine may be possible only with the help of a second battery (jump start).
Vehicle is ready to drive Shutdown occurs when locked or automatically in XX mins	* You are about to leave the vehicle and the engine is running. The vehicle will switch off automatically in 20 minutes. ▶ To prevent the vehicle from switching off automatically, acknowledge the message on the central display of the multimedia system. * You are in the vehicle. Park position P is engaged and the engine is running. After a certain holding time, this display message will appear on the driver display. The vehicle will then switch off automatically after a total of 20 minutes of holding time. ▶ To prevent the vehicle from switching off automatically, acknowledge the message on the central display of the multimedia system.
 Trailer coupling Check lock (white display message)	* The trailer hitch is not operational during a journey with a trailer. ⚠ **WARNING** Risk of an accident if the ball neck is not locked The trailer may become detached. ▶ Stop the vehicle immediately in accordance with the traffic conditions. Do not continue driving. ▶ Uncouple the trailer and secure it against rolling away.

Display messages	Possible causes/consequences and ▶ Solutions
	▶ Initiate a new swivelling procedure and do not re-couple the trailer until the display message disappears. ▶ Stop immediately in accordance with the traffic conditions and switch off the vehicle. ▶ Uncouple the trailer and secure it against rolling away. ▶ Initiate a new swivel movement (→ page 39). ▶ When the display message disappears, couple up the trailer and drive on. If the display message does not disappear, the trailer hitch is malfunctioning and the ball neck is not locked. ▶ Do not couple up the trailer. Drive on without the trailer. Note the reduced ground clearance due to the unlocked ball neck. ▶ Consult a qualified specialist workshop. * When the vehicle is stationary with a coupled trailer, the trailer hitch is not operational. ▶ Uncouple the coupled trailer and secure it against rolling away. ▶ **If the ball neck has been folded in:** unlock the ball neck (→ page 39). ▶ Swivel the ball neck into the end position manually and let it engage. ▶ **If the ball neck has been folded out:** unlock the ball neck (→ page 39). ▶ Swivel the ball neck beneath the bumper manually and let it engage. If the display message does not disappear, the trailer hitch is malfunctioning and the ball neck is not locked.

Display messages	Possible causes/consequences and ▶ Solutions
	▶ Do not couple up the trailer. Drive on without the trailer. Note the reduced ground clearance due to the unlocked ball neck. ▶ Consult a qualified specialist workshop.
 Trailer coupling Check lock(red display message)	* The trailer hitch is not operational during a journey with a trailer. ⚠ **WARNING** Risk of an accident if the ball neck is not locked The trailer may become detached. ▶ Stop the vehicle immediately in accordance with the traffic conditions. Do not continue driving. ▶ Uncouple the trailer and secure it against rolling away. ▶ Initiate a new swivelling procedure and do not re-couple the trailer until the display message disappears. ▶ Stop immediately in accordance with the traffic conditions and switch off the vehicle. ▶ Uncouple the trailer and secure it against rolling away. ▶ Initiate a new swivel movement (→ page 39). ▶ When the display message disappears, couple up the trailer and drive on. If the display message does not disappear, the trailer hitch is malfunctioning and the ball neck is not locked. ▶ Do not couple up the trailer. Drive on without the trailer. Note the reduced ground clearance due to the unlocked ball neck. ▶ Consult a qualified specialist workshop.

Display messages	Possible causes/consequences and ▶ Solutions
	* When the vehicle is stationary with a coupled trailer, the trailer hitch is not operational. ▶ Uncouple the coupled trailer and secure it against rolling away. ▶ **If the ball neck has been folded in:** unlock the ball neck (→ page 39). ▶ Swivel the ball neck into the end position manually and let it engage. ▶ **If the ball neck has been folded out:** unlock the ball neck (→ page 39). ▶ Swivel the ball neck beneath the bumper manually and let it engage. If the display message does not disappear, the trailer hitch is malfunctioning and the ball neck is not locked. ▶ Do not couple up the trailer. Drive on without the trailer. Note the reduced ground clearance due to the unlocked ball neck. ▶ Consult a qualified specialist workshop.
Head-up display currently unavailable See Owner's Manual	* The head-up display is temporarily unavailable. Possible causes: • malfunctions in the power supply • signal interference ▶ Stop in accordance with the traffic conditions and switch the vehicle off and on again. ▶ If the display message still appears, consult a qualified specialist workshop.
Head-up display inoperative	* The head-up display has an internal error. ▶ Consult a qualified specialist workshop.

Display messages	Possible causes/consequences and ▶ Solutions
 Steering malfunction Increased physical effort See Owner's Manual	* The power steering assistance is malfunctioning. ⚠ **WARNING** Risk of an accident due to altered steering characteristics If the power assistance of the steering fails partially or completely, you will need to use more force to steer. ▶ If safe steering is possible, drive on carefully. ▶ Visit or consult a qualified specialist workshop immediately. ▶ If safe steering is possible, drive on carefully. ▶ Visit or consult a qualified specialist workshop immediately.
 Steering malfunction Stop immediately See Owner's Manual	* The steering is malfunctioning. Steering capability is significantly impaired. ⚠ **WARNING** Risk of accident if steering capability is impaired If the steering does not function as intended, the vehicle's operating safety is jeopardised. ▶ Pull over and stop the vehicle safely as soon as possible, paying attention to road and traffic conditions. Do not continue driving under any circumstances. ▶ Consult a qualified specialist workshop. ▶ Stop the vehicle immediately in accordance with the traffic conditions. Do not continue driving. ▶ Consult a qualified specialist workshop.

Display messages	Possible causes/consequences and ▶ Solutions
 Steering malfunction See Owner's Manual	* The electric steering lock is malfunctioning. The steering may be locked by the electric steering lock. ⚠ **WARNING** Risk of accident if steering capability is impaired If the steering does not function as intended, the vehicle's operating safety is jeopardised. ▶ Pull over and stop the vehicle safely as soon as possible, paying attention to road and traffic conditions. Do not continue driving under any circumstances. ▶ Consult a qualified specialist workshop. ▶ Stop the vehicle immediately in accordance with the traffic conditions. Do not continue driving. ▶ Consult a qualified specialist workshop.
 Before starting the engine, turn the steering wheel.	* The electric steering lock could not unlock the steering. ▶ Switch off the vehicle. ▶ To unlock the steering, move the steering wheel slightly to the left and right. ▶ Switch on the vehicle again.
Active bonnet malfunction See Owner's Manual	* The active bonnet (pedestrian protection) is malfunctioning or inoperative after having already been triggered. ▶ Consult a qualified specialist workshop.

Display messages	Possible causes/consequences and ▶ Solutions
	* At least one door is open. ▶ Close all doors.
	* The bonnet is open. ⚠ **WARNING** Risk of accident due to driving with the bonnet unlocked The bonnet may open and block your view. ▶ Never release the bonnet when driving. ▶ Before every trip, ensure that the engine bonnet is locked. ▶ Stop the vehicle immediately in accordance with the traffic conditions. ▶ Close the bonnet.
	* The boot lid is open. ⚠ **DANGER** Risk of exhaust gas poisoning Combustion engines emit poisonous exhaust gases such as carbon monoxide. Exhaust gases can enter the vehicle interior if the boot lid is open when the engine is running, especially if the vehicle is in motion. ▶ Always switch off the engine before opening the boot lid. ▶ Never drive with the boot lid open.

Display messages	Possible causes/consequences and ▶ Solutions
	▶ Close the boot lid.
Anti-theft alarm system Malfunction	* The anti-theft alarm system is malfunctioning. ▶ Consult a qualified specialist workshop.
 Top up washer fluid	* The washer fluid level in the washer fluid reservoir has dropped below the minimum. ▶ Top up the washer fluid (→ page 27).
Wiper Malfunction	* The windscreen wiper is malfunctioning. ▶ Restart the vehicle. If the display message still appears: ▶ Consult a qualified specialist workshop.
4matic currently unavailable	* 4MATIC is currently unavailable. ▶ Drive on carefully. ▶ Consult a qualified specialist workshop.
4matic inoperative	* 4MATIC is inoperative. ▶ Drive on carefully. ▶ Consult a qualified specialist workshop.

Engine

Display messages	Possible causes/consequences and ▶ Solutions
To switch off the vehicle, press the Start/Stop button for at least 3 seconds or 3 times	* You have pressed the start/stop button while the vehicle is in motion. ▶ Information about switching off the vehicle while driving (→ page 232).
 Top up coolant See Owner's Manual	* The coolant level is too low. ! NOTE Engine damage due to insufficient coolant ▶ Avoid long journeys with insufficient coolant. ▶ Add coolant (→ page 560). ▶ Have the engine cooling system checked at a qualified specialist workshop.
 Coolant Stop Switch off the vehicle	* The coolant is too hot. ▶ Stop immediately in accordance with the traffic conditions and switch off the vehicle.

Display messages	Possible causes/consequences and ▶ Solutions
	⚠ **WARNING** Risk of burns when opening the bonnet If you open the bonnet in the event of an overheated engine or fire in the engine compartment, the following situations may occur: • You may come into contact with hot gases. • You may come into contact with other escaping hot operating fluids. ▶ Before opening the bonnet, allow the engine to cool down. ▶ In the event of a fire in the engine compartment, keep the bonnet closed and call the fire service. ▶ Wait until the engine has cooled down. ▶ Make sure that the air supply to the radiator is not obstructed. ▶ Avoiding high loads on the engine, drive to the nearest qualified specialist workshop. In doing so, ensure that the coolant temperature display remains below 120°C.
 Clean the fuel filter	* **Vehicles with diesel engines:** the fuel filter is dirty or the water in the fuel filter needs to be drained. ▶ Consult a qualified specialist workshop.

Display messages	Possible causes/consequences and ▶ Solutions
Replace air filter	* **Vehicles with diesel engines:** the engine air filter is dirty and must be replaced. ▶ Consult a qualified specialist workshop.
Reserve fuel	* The fuel supply has dropped into the reserve range. ▶ Refuel.
Drive system Malfunction Visit workshop	* The drive system is malfunctioning. ▶ Consult a qualified specialist workshop.
Drive system malfunction Stop Switch off the vehicle	* The drive system is malfunctioning. ▶ Stop the vehicle immediately, paying attention to road and traffic conditions, and switch off the engine. ▶ Consult a qualified specialist workshop.

Transmission

Display messages	Possible causes/consequences and ▶ Solutions
Only select P when vehicle is stationary	* It is possible to select the park position P only if the vehicle is stationary. ▶ Depress the brake pedal to stop. ▶ Shift the transmission to park position P when the vehicle is stationary.
Apply brake to deselect P position	* You have attempted to shift the transmission out of park position P and into another transmission position. ▶ Depress the brake pedal. ▶ Select transmission position D, R or neutral N.
Apply brake and start vehicle to shift out of P or N	* You have attempted to shift the transmission out of park position P or neutral N and into another transmission position. ▶ Depress the brake pedal. ▶ Start the vehicle. ▶ Change the transmission position.
Apply brake to engage D or R	* You have attempted to select transmission position D or R. ▶ Depress the brake pedal. ▶ Select transmission position D or R.
Apply brake to engage R	* You have attempted to select transmission position R. ▶ Depress the brake pedal.

Display messages	Possible causes/consequences and ▶ Solutions
	▶ Select transmission position R.
Apply parking brake to park Visit workshop	* A malfunction has occurred in the emergency power supply to park position P. ▶ Consult a qualified specialist workshop. ▶ Until then, always select park position P manually before you switch off the vehicle. ▶ Before leaving the vehicle, apply the electric parking brake.
Risk of vehicle rolling away Driver's door open Transmission not in P	* The driver's door is not fully closed and transmission position D, R or neutral N is selected. The vehicle may roll away. ▶ Select park position P when switching off the vehicle.
Risk of vehicle rolling away Apply parking brake to park	* The transmission is malfunctioning. Park position P cannot be selected. ▶ Park the vehicle safely. ▶ Use the electric parking brake to secure the vehicle against rolling away. ▶ On gradients, turn the front wheels so that the vehicle will roll towards the kerb if it starts moving.
N permanently active Risk of vehicle rolling	* Neutral N has been engaged while the vehicle is moving or while you are driving. ▶ Depress the brake pedal to stop. ▶ Shift the transmission to park position P when the vehicle is stationary. ▶ To continue driving, select transmission position D or R.

Display messages	Possible causes/consequences and ▶ Solutions
Reversing not poss. Consult workshop	* The transmission is malfunctioning. It is not possible to select transmission position R. ▶ Consult a qualified specialist workshop.
Transmission Malfunction Stop	* The transmission is malfunctioning. The transmission shifts to neutral N automatically. ▶ Stop the vehicle immediately in accordance with the traffic conditions. ▶ Depress the brake pedal. ▶ Engage park position P. ▶ Consult a qualified specialist workshop.
Consult workshop without changing the transmission position	* The transmission is malfunctioning. It is no longer possible to change the transmission position. ▶ If transmission position D is selected, consult a qualified specialist workshop and do not change the transmission position. ▶ For all other transmission positions, park the vehicle safely. ▶ Consult a qualified specialist workshop.
Transmission Malfunction	* The transmission is malfunctioning. The cause could be an overheated clutch or blocked gears. ▶ Let the transmission cool down. ▶ If the display message still appears following a restart, consult a qualified specialist workshop.

Display messages	Possible causes/consequences and ▶ Solutions
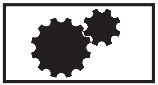 Transmission oil overheated Drive on with care	* The transmission is overheating. When the display message is active, start-up and driving characteristics may be temporarily impaired. ▶ Drive at low engine speed. ▶ Avoid sporty driving. ▶ Before pulling away on uphill gradients, let the transmission cool down until the display message disappears.
Parking lock inoperative Apply the parking brake	* The transmission is malfunctioning. Park position P cannot be selected. ▶ Park the vehicle safely. ▶ Use the electric parking brake to secure the vehicle against rolling away.
Teaching in transmission Operate selector lever Brake for XX seconds Risk of vehicle rolling	* The transmission is being taught in. There is a risk of the vehicle rolling away. ▶ Depress and hold the brake pedal until the teach-in process has been completed. The electric parking brake will be applied automatically during the teach-in procedure. ▶ Switch on the vehicle. ▶ Select park position P, transmission position R or neutral N.
Teaching in transmission complete	* The transmission's teach-in process is complete. All transmission positions can be selected again.

Display messages	Possible causes/consequences and ▶ Solutions
Transmission Malfunction Visit workshop	* The transmission is malfunctioning. Consult a qualified specialist workshop.
Auxiliary battery malfunction (white display message)	* There is a malfunction in the auxiliary battery. ▶ Consult a qualified specialist workshop. ▶ Until then, always select park position P manually before you switch off the vehicle. ▶ Before leaving the vehicle, apply the electric parking brake.
Auxiliary battery malfunction (red display message)	* There is a malfunction in the auxiliary battery. ▶ Consult a qualified specialist workshop. ▶ Until then, always select park position P manually before you switch off the vehicle. ▶ Before leaving the vehicle, apply the electric parking brake.

Brakes

Display messages	Possible causes/consequences and ▶ Solutions
 Parking brake See Owner's Manual	* The yellow (P) indicator lamp is lit. The electric parking brake is malfunctioning. **To apply:** ▶ Switch the vehicle off and switch it back on ▶ Apply the electric parking brake manually (→ page 299). If it is not possible to apply the electric parking brake: ▶ Consult a qualified specialist workshop. ▶ Where necessary, also secure the parked vehicle against rolling away. * The yellow (P) indicator lamp and the red (P) indicator lamp are lit. The electric parking brake is malfunctioning. **To release:** ▶ Switch the vehicle off and switch it back on ▶ Release the electric parking brake manually (→ page 299). or ▶ Release the electric parking brake automatically (→ page 298). If it is still not possible to release the electric parking brake: ▶ Do not continue driving. Consult a qualified specialist workshop. * The yellow (P) indicator lamp is lit and the red (P) indicator lamp is flashing. The electric parking brake is malfunctioning.

Display messages	Possible causes/consequences and ▶ Solutions
	The electric parking brake could not be applied or released. ▶ Switch the vehicle off and switch it back on **To apply:** ▶ Release and then apply the electric parking brake manually (→ page 299). **To release:** ▶ Apply and then release the electric parking brake manually. If it is not possible to apply the electric parking brake or the red (P) indicator lamp continues to flash: ▶ Do not continue driving. Consult a qualified specialist workshop. ▶ Where necessary, also secure the parked vehicle against rolling away.
	* The yellow (P) indicator lamp is lit and the red (P) indicator lamp flashes for approximately ten seconds after the electric parking brake has been applied or released. It then remains lit or goes out. The electric parking brake is malfunctioning. **If the state of charge is too low:** ▶ Charge the 12 V battery. **To apply:** ▶ Switch off the vehicle. The electric parking brake will be applied automatically.

Display messages	Possible causes/consequences and ▶ Solutions
	If you do not want the electric parking brake to be applied, e.g. at an automatic car wash or when the vehicle is being towed, leave the vehicle switched on. This does not include having the vehicle towed with the rear axle raised. If the electric parking brake is not applied automatically: ▶ Switch the vehicle off and switch it back on ▶ Release and then apply the electric parking brake manually (→ page 299). If it is still not possible to apply the electric parking brake: ▶ Consult a qualified specialist workshop. ▶ Where necessary, also secure the parked vehicle against rolling away. **To release:** ▶ If the conditions for automatic release are fulfilled and the electric parking brake is not released automatically, release the electric parking brake manually (→ page 299). If it is still not possible to release the electric parking brake: ▶ Do not continue driving. Consult a qualified specialist workshop.
Release parking brake	* The red (P) indicator lamp is flashing. The electric parking brake is applied while you are driving: • A condition for automatic release of the electric parking brake has not been fulfilled (→ page 298). • You are performing emergency braking using the electric parking brake (→ page 300).

Display messages	Possible causes/consequences and ▶ Solutions
	▶ Check the conditions for automatic release of the electric parking brake. ▶ Release the electric parking brake manually.
Parking brake Switch on vehicle to release	* The red Ⓟ indicator lamp is lit. You have attempted to release the electric parking brake with the vehicle switched off. ▶ Switch on the vehicle.
Check brake fluid level	* There is insufficient brake fluid in the brake fluid reservoir. ⚠ **WARNING** Risk of an accident due to low brake fluid level If the brake fluid level is too low, the braking effect and the braking characteristics may be impaired. ▶ Stop the vehicle as soon as possible, paying attention to road and traffic conditions. Do not continue driving. ▶ Consult a qualified specialist workshop. ▶ Do not top up the brake fluid. ▶ Stop the vehicle immediately in accordance with the traffic conditions. Do not continue driving. ▶ Do not top up the brake fluid. ▶ Consult a qualified specialist workshop.

Display messages	Possible causes/consequences and ▶ Solutions
Check brake pads See Owner's Manual	* The brakepads have reached the wear limit. ▶ Consult a qualified specialist workshop.

Driving and driving safety systems

Display messages	Possible causes/consequences and ▶ Solutions
 currently unavailable See Owner's Manual (ABS and ESP®)	* ABS and ESP® are temporarily unavailable. Other driving systems and driving safety systems (e.g. BAS) may also be temporarily unavailable. The brake system will continue to operate normally. Braking distance may increase in an emergency braking situation. ⚠ **WARNING** Risk of skidding if ABS and ESP® are malfunctioning The wheels may lock during braking and ESP® does not perform any vehicle stabilisation. The steerability and braking characteristics are heavily impaired and the braking distance may increase. In addition, other driving safety systems are switched off. ▶ Drive carefully on a suitable stretch of road, making slight steering movements at a speed above 30 km/h. ▶ If the display message does not disappear, consult a qualified specialist workshop immediately. Drive carefully. ▶ Drive carefully on a suitable stretch of road, making slight steering movements at a speed above 30 km/h. ▶ If the display message does not disappear, consult a qualified specialist workshop immediately. Drive carefully.

Display messages	Possible causes/consequences and ▶ Solutions
 inoperative See Owner's Manual (ABS and ESP®)	* ABS and ESP® are malfunctioning. Other driving systems and driving safety systems (e.g. BAS) may also be malfunctioning. The brake system will continue to operate normally. Braking distance may increase in an emergency braking situation. ⚠ **WARNING** Risk of skidding if ABS and ESP® are malfunctioning The wheels may block during braking and ESP® does not perform any vehicle stabilization. The steerability and braking characteristics are heavily impaired and the braking distance may increase. In addition, other driving safety systems are switched off. ▶ Drive on carefully. ▶ Have ABS and ESP® checked immediately at a qualified specialist workshop. ▶ Drive on carefully. ▶ Consult a qualified specialist workshop immediately.
 currently unavailable See Owner's Manual (ESP®)	* ESP® is temporarily unavailable. Other driving systems and driving safety systems (e.g. BAS) may also be malfunctioning. ⚠ **WARNING** Risk of skidding if ESP is malfunctioning® If ESP® is malfunctioning, ESP® cannot carry out vehicle stabilisation. In addition, other driving safety systems are switched off.

Display messages	Possible causes/consequences and ▶ Solutions
	▶ Drive carefully on a suitable stretch of road, making slight steering movements at a speed above 30 km/h. ▶ If the display message does not disappear, consult a qualified specialist workshop immediately. Drive carefully. ▶ Drive carefully on a suitable stretch of road, making slight steering movements at a speed above 30 km/h. ▶ If the display message does not disappear, consult a qualified specialist workshop immediately. Drive carefully.
 inoperative See Owner's Manual (ESP®)	* ESP® is malfunctioning. Other driving systems and driving safety systems (e.g. BAS) may also be malfunctioning. The brake system will continue to operate normally. Braking distance may increase in an emergency braking situation. ⚠ **WARNING** Risk of skidding if ESP® is malfunctioning If ESP® is malfunctioning, ESP® cannot carry out vehicle stabilisation. In addition, other driving safety systems are switched off. ▶ Drive on carefully. ▶ Have ESP® checked at a qualified specialist workshop. ▶ Drive on carefully. ▶ Consult a qualified specialist workshop immediately.

Display messages	Possible causes/consequences and ▶ Solutions
EBD ABS inoperative See Owner's Manual (EBD, ABS and ESP®)	* EBD, ABS and ESP® are malfunctioning. Other driving systems and driving safety systems (e.g. BAS) may also be malfunctioning. **⚠ WARNING** Risk of skidding if EBD, ABS and ESP® are malfunctioning The wheels may block during braking and ESP® does not perform any vehicle stabilization. The steerability and braking characteristics are heavily impaired and the braking distance may increase. In addition, other driving safety systems are switched off. ▶ Drive on carefully. ▶ Have the brake system checked immediately at a qualified specialist workshop. ▶ Drive on carefully. ▶ Consult a qualified specialist workshop immediately.
HOLD Off	* The HOLD function is deactivated because the vehicle is slipping or a condition for activation is not fulfilled. ▶ Reactivate the HOLD function later or check the activation conditions for the HOLD function (→ page 311).

Display messages	Possible causes/consequences and ▶ Solutions
ATTENTION ASSIST: Take a break!	* ATTENTION ASSIST has detected fatigue or an increasing lack of concentration on the part of the driver (→ page 313). ▶ If necessary, take a break.
- - - km/h	* Cruise control cannot be activated as not all activation conditions are fulfilled. ▶ Observe the activation conditions for cruise control (→ page 316).
Cruise control inoperative	* Cruise control is malfunctioning. ▶ Consult a qualified specialist workshop.
Cruise control and Limiter inoperative	* Cruise control and the limiter are malfunctioning. ▶ Consult a qualified specialist workshop.
Cruise control off	* Cruise control has been deactivated. If there is an additional warning tone, cruise control has been deactivated automatically (→ page 315).

Display messages	Possible causes/consequences and ▶ Solutions
LIM - - - km/h	* The limiter can temporarily not be engaged. Once the cause of the problem is no longer present, the system will be available again.
LIM passive	* If you depress the accelerator pedal beyond the point of resistance (kickdown), the limiter will be switched to passive mode (→ page 316).
Limiter inoperative	* The limiter is malfunctioning. ▶ Consult a qualified specialist workshop.
Speed Limit Assist currently unavailable See Owner's Manual	* Speed Limit Assist is temporarily unavailable. ▶ Drive on Once the cause of the problem is no longer present, the system will be available again.
Speed Limit Assist inoperative	* Speed Limit Assist is malfunctioning. ▶ Drive on or ▶ Stop the vehicle in accordance with the traffic conditions and restart the vehicle. ▶ If the display message does not disappear: consult a qualified specialist workshop.

Display messages	Possible causes/consequences and ▶ Solutions
Speed limit (winter tyres) XXX km/h	* You have reached the maximum permissible stored speed for winter tyres. It is not possible to exceed this speed.
120 km/h! Maximum speed exceeded	* You have exceeded the maximum permissible speed (for certain countries only). ▶ Drive more slowly.
Traffic Sign Assist currently unavailable See Owner's Manual	* Traffic Sign Assist is temporarily unavailable. Once the cause of the problem is no longer present, the system will be available again. ▶ Continue driving in compliance with the traffic regulations.
Traffic Sign Assist inoperative	* Traffic Sign Assist is malfunctioning. ▶ Continue driving in compliance with the traffic regulations. or ▶ Stop the vehicle in accordance with the traffic conditions and restart the vehicle. ▶ If the display message does not disappear: consult a qualified specialist workshop.

Display messages	Possible causes/consequences and ▶ Solutions
Fault Drive at max. 80 km/h	* The adjustable damping is malfunctioning. The vehicle's handling characteristics may be affected. ▶ Do not drive at speeds greater than 80 km/h. ▶ Consult a qualified specialist workshop.
Fault Drive at max. 80 km/h	* AMG RIDE CONTROL is malfunctioning. The vehicle's handling characteristics may be affected. ▶ Do not drive at speeds greater than 80 km/h. ▶ Consult a qualified specialist workshop.
AMG Ride Control Function limited See Owner's Manual	* At least one of the main functions of AMG RIDE CONTROL is malfunctioning. The system is outside the operating temperature range or the on-board electrical system voltage is too low. Once the cause of the problem is no longer present, the system will be available again. ! **NOTE** The vehicle's suspension and damping behaviour is restricted. The vehicle body may tilt heavily to the side during cornering. ▶ Drive on carefully. ▶ Reduce speed considerably before taking a bend. ▶ Avoid sudden steering movements.

Display messages	Possible causes/consequences and ▶ Solutions
	▶ Drive on carefully. ▶ Reduce speed considerably before taking a bend. ▶ Avoid sudden steering movements.
RACE START cancelled	* Possible causes: • you released the accelerator pedal during RACE START. • you depressed the brake pedal during RACE START. ▶ You can try RACE START again at the next start.

Driver assistance systems

Display messages	Possible causes/consequences and ▶ Solutions
 - - - km/h	* Active Distance Assist DISTRONIC cannot be activated as not all activation conditions are fulfilled. ▶ Comply with the activation conditions of Active Distance Assist DISTRONIC (→ page 321).

Display messages	Possible causes/consequences and ▶ Solutions
suspended	* If you depress the accelerator pedal beyond the setting of Active Distance Assist DISTRONIC, the system will switch to passive mode (→ page 318).
Off	* Active Distance Assist DISTRONIC was deactivated. If a warning tone also sounds, Active Distance Assist DISTRONIC has deactivated automatically (→ page 321).
Active Distance Assist currently unavailable See Owner's Manual	* Active Distance Assist DISTRONIC is temporarily unavailable. The ambient conditions are outside the system limits (→ page 318). As soon as the ambient conditions are within the system limits, the system will become available again. ▶ Drive on carefully. or ▶ If the display message does not disappear, stop the vehicle in accordance with the traffic conditions and restart the vehicle.
Active Distance Assist inoperative	* Active Distance Assist DISTRONIC and Active Emergency Stop Assist are malfunctioning. Other driving systems and driving safety systems may also be malfunctioning. ▶ Drive on carefully.

Display messages	Possible causes/consequences and ▶ Solutions
	or ▶ Stop the vehicle in accordance with the traffic conditions and restart the vehicle. ▶ If the display message does not disappear: consult a qualified specialist workshop.
Active Distance Assist available again	* Active Distance Assist DISTRONIC is operational again. ▶ Switch on Active Distance Assist DISTRONIC (→ page 321).
Active Brake Assist Functions currently limited See Owner's Manual	* For vehicles with the Driving Assistance Package, the following functions may be temporarily unavailable or only partially available: • Active Brake Assist with turning manoeuvre function • Active Evasive Steering Assist The ambient conditions are outside the system limits (→ page 330). **Vehicles without the Driving Assistance Package:** Active Brake Assist is temporarily unavailable. ▶ Drive on carefully. As soon as the ambient conditions are within the system limits, the system will become available again. or ▶ If the display message does not disappear, stop the vehicle in accordance with the traffic conditions and restart the vehicle.

Display messages	Possible causes/consequences and ▶ Solutions
Active Brake Assist Functions limited See Owner's Manual	* For vehicles with the Driving Assistance Package, the following functions may be temporarily unavailable or only partially available: • Active Brake Assist with turning manoeuvre function • Active Evasive Steering Assist **Vehicles without the Driving Assistance Package:** Active Brake Assist is temporarily unavailable or only partially available. ▶ Drive on carefully. or ▶ Stop the vehicle in accordance with the traffic conditions and restart the vehicle. ▶ If the display message does not disappear: consult a qualified specialist workshop.
Active Steering Assist currently unavailable See Owner's Manual	* Active Steering Assist is temporarily unavailable. The ambient conditions are outside the system limits (→ page 327). As soon as the ambient conditions are within the system limits, the system will become available again. ▶ Drive on ▶ Check the tyre pressure if necessary.
Active Steering Assist inoperative	* Active Steering Assist and Active Emergency Stop Assist are malfunctioning. Active Distance Assist DISTRONIC remains available. ▶ Drive on or

Display messages	Possible causes/consequences and ▶ Solutions
	▶ Stop the vehicle in accordance with the traffic conditions and restart the vehicle. ▶ If the display message does not disappear: consult a qualified specialist workshop.
	* Active Steering Assist has reached the system limits (→ page 327). You have not steered independently for a considerable period of time. ▶ Take over the steering and drive on in accordance with the traffic conditions.
Active Steering Assist currently unavailable due to multiple emergency stops	* Active Steering Assist is temporarily unavailable due to multiple emergency stops. ▶ Take over the steering and stop in accordance with the traffic conditions. ▶ Switch the vehicle off and switch it back on Active Steering Assist is available once more.
 Beginning emergency stop	* Your hands are not on the steering wheel. Emergency stop is initiated (→ page 327). ▶ Actively steer. ▶ Accelerate or brake. Information on cancelling an emergency stop (→ page 329).
Blind Spot Assist currently unavailable See Owner's Manual	* Blind Spot Assist is temporarily unavailable. The system limits have been reached (→ page 343). Once the cause of the problem is no longer present, the system will be available again. ▶ Drive on or

Display messages	Possible causes/consequences and ▶ Solutions
	▶ If the display message does not disappear, stop the vehicle in accordance with the traffic conditions and restart the vehicle.
Blind Spot Assist inoperative	* Blind Spot Assist or the exit warning is malfunctioning. ▶ Drive on or ▶ Stop the vehicle in accordance with the traffic conditions and restart the vehicle. ▶ If the display message does not disappear: consult a qualified specialist workshop.
Blind Spot Assist unavailable when towing a trailer See Owner's Manual	* When you establish the electrical connection to the trailer, Blind Spot Assist will be unavailable. ▶ Press the left-hand Touch Control and acknowledge the display message.
Active Lane Keeping Assist currently unavailable See Owner's Manual	* Active Lane Keeping Assist is temporarily unavailable. The ambient conditions are outside the system limits (→ page 345). As soon as the ambient conditions are within the system limits, the system will become available again. ▶ Drive on
Active Lane Keeping Assist inoperative	* Active Lane Keeping Assist and Active Emergency Stop Assist are malfunctioning. ▶ Drive on or ▶ Stop the vehicle in accordance with the traffic conditions and restart the vehicle. ▶ If the display message does not disappear: consult a qualified specialist workshop.

Display messages	Possible causes/consequences and ▶ Solutions
Active Lane Keeping Assist functions restricted See Owner's Manual	* Active Lane Keeping Assist is available but restricted. ▶ Drive on or ▶ Stop the vehicle in accordance with the traffic conditions and restart the vehicle. ▶ If the display message does not disappear: consult a qualified specialist workshop.
 temporarily unavailable Sensors dirty	* Front and corner radar sensors (hereafter "sensors") are malfunctioning. Possible causes: • The sensors are dirty • Heavy rain or snow • Extended country driving without other traffic, e.g. in the desert Driving systems and driving safety systems may be malfunctioning or temporarily unavailable. The brake system, steering and drive system will continue to function normally. ▶ Drive on carefully. Once the causes of the problem are no longer present, the driving systems and driving safety systems will be available again and the corresponding symbols will be switched off. If the display message does not disappear: ▶ Stop the vehicle in accordance with the traffic conditions. ▶ Clean all sensor covers from the outside (→ page 303). ▶ Restart the vehicle.

Display messages	Possible causes/consequences and ▶ Solutions
 Camera view restricted See Owner's Manual	* The view of the multifunction camera is restricted. Possible causes: • Dirt on the windscreen in the field of vision of the multifunction camera • Heavy rain, snow or fog • Mist on the inside of the windscreen: in certain weather conditions, mist can form on the inside or outside of the windscreen during cold times of year in particular. ⓘ This mist on the windscreen will be removed automatically within a short time with the aid of a heater. The restriction is temporary. Driving systems and driving safety systems may be malfunctioning or temporarily unavailable. The brake system, steering and drive system will continue to function normally. ▶ Drive on carefully. ▶ To remove mist from the outside, wipe once (→ page 211). ▶ To remove mist from the inside, press MAX (→ page 222). Once the causes of the problem are no longer present, the driving systems and driving safety systems will be available again and the corresponding symbols will be switched off. If the display message does not disappear even after a longer driving time of about 15 minutes: ▶ Stop the vehicle in accordance with the traffic conditions. ▶ Clean the windscreen, especially in the position of the multifunction camera (→ page 303). ▶ Restart the vehicle.

Display messages	Possible causes/consequences and ▶ Solutions
Restricted during trailer operation	* When the trailer socket is occupied, some driving systems will be available only to a limited extent. ▶ Drive carefully if you are towing a trailer or have the bicycle rack mounted.
PRE-SAFE inoperative See Owner's Manual	* The PRE-SAFE® functions are malfunctioning. ▶ Consult a qualified specialist workshop.

Parking assistance systems

Display messages	Possible causes/consequences and ▶ Solutions
PARKTRONIC inoperative See Owner's Manual	* Parking Assist PARKTRONIC is malfunctioning. Once the cause of the problem is no longer present, the system will be available again.

Display messages	Possible causes/consequences and ▶ Solutions
	▶ Continue driving while paying attention to the vehicle's surroundings. or ▶ Stop the vehicle in accordance with the traffic conditions and restart the vehicle. ▶ If the display message still appears, consult a qualified specialist workshop.
Active Parking Assist and PARKTRONIC inoperative See Owner's Manual	* Active Parking Assist and Parking Assist PARKTRONIC are malfunctioning. Once the cause of the problem is no longer present, the system will be available again. ▶ Continue driving while paying attention to the vehicle's surroundings. or ▶ Stop the vehicle in accordance with the traffic conditions and restart the vehicle. ▶ If the display message still appears, consult a qualified specialist workshop.

Mercedes-Benz emergency call system

Display messages	Possible causes/consequences and ▶ Solutions
SOS Inoperative	* The Mercedes-Benz emergency call system is malfunctioning. The Mercedes me connect system is also malfunctioning. ▶ Consult a qualified specialist workshop.

Battery

Display messages	Possible causes/consequences and ▶ Solutions
12 V on-board electrical system Visit workshop	* The 12 V on-board electrical system is malfunctioning. ▶ Consult a qualified specialist workshop immediately.
Stop vehicle See Owner's Manual	* The 12 V battery is no longer being charged and the state of charge is too low. **NOTE** Possible engine damage if you continue driving ▶ Do not continue driving under any circumstances. ▶ Consult a qualified specialist workshop. ▶ Stop the vehicle immediately in accordance with the traffic conditions. Do not continue driving. ▶ Switch off the vehicle. ▶ Consult a qualified specialist workshop.

Display messages	Possible causes/consequences and ▶ Solutions
Start the vehicle to charge the 12 V battery	* The vehicle is off and the state of charge of the 12 V battery is too low. ▶ Switch off electrical consumers that are not required. ▶ Drive for 30–60 mins. or ▶ Charge the 12 V battery when stationary (→ page 50). ▶ **Plug-in hybrid:** Charge the vehicle at a charging station (→ page 273).
Stop vehicle Leave vehicle on to charge the 12 V battery	* The state of charge of the 12 V battery is too low. ▶ Stop the vehicle immediately in accordance with the traffic conditions. Do not continue driving. ▶ Leave the vehicle running ▶ If the display message disappears: drive on. ▶ If the display message does not disappear: consult a qualified specialist workshop.
Battery overheated Stop, everybody out! Outdoors if possible	* The 48 V battery is overheating. There is a risk of fire. ▶ Stop the vehicle immediately in accordance with the traffic conditions. ▶ If possible, stop the vehicle in the open air and ensure that all vehicle occupants get out. ⓘ Supporting vehicle functions may activate automatically, e.g. air-recirculation mode as part of climate control. ▶ Do not continue driving. ▶ If smoke is present, leave the danger zone and call the fire service immediately.

Display messages	Possible causes/consequences and ▶ Solutions
	▶ Consult a qualified specialist workshop even if there are no external signs of a fire.
48 V battery See Owner's Manual	* The 48 V on-board electrical system has function restrictions. Comfort functions, such as the air conditioning system, may be available only to a limited extent. It is possible to drive on. ▶ If the display message remains active permanently, consult a qualified specialist workshop immediately.
Please wait 48 V battery charging	* The 48 V battery is discharged. You have switched on the vehicle while the 12 V battery was being charged with a suitable charger or while another vehicle was providing starting assistance. The discharged 48 V battery is charged automatically via the voltage converter. After a few minutes, the Possible to start the vehicle again display message will be shown on the driver's display. ▶ Start the vehicle. ▶ Drive the vehicle for a while to charge the 12 V battery and the 48 V battery after disconnecting the charger from the vehicle. If the Possible to start the vehicle again display message does not appear after a few minutes: ▶ Try to start the vehicle. ▶ If the vehicle does not start, consult a qualified specialist workshop.
Possible to start the vehicle again	* The 48 V battery has been charged automatically via the voltage converter. ▶ Start the vehicle and drive for a while to charge the 12 V battery and the 48 V battery.

Tyre pressure monitor

Display messages	Possible causes/consequences and ▶ Solutions
Tyre press. monitor currently unavailable	* There is interference from a powerful radio signal source As a result, no signals from the tyre pressure sensors are being received. The tyre pressure monitoring system is temporarily unavailable. The tyre pressure monitoring system will restart automatically as soon as the cause has been rectified. ▶ Drive on
Tyre press. monitor inoperative	* The tyre pressure monitoring system is malfunctioning. ⚠ **WARNING** There is a risk of an accident if the tyre pressure monitoring system is malfunctioning The tyre pressure monitoring system cannot issue a warning if there is pressure loss in one or more of the tyres. Tyres with insufficient tyre pressure may impair the driving characteristics as well as steering and braking. ▶ Have the tyre pressure monitoring system checked at a qualified specialist workshop. ▶ Consult a qualified specialist workshop.
Tyre pressure monitor inoperative No tyre pressure sensors	* The wheels fitted do not have suitable tyre pressure sensors. The tyre pressure monitoring system is deactivated. ▶ Fit wheels with suitable tyre pressure sensors.

Display messages	Possible causes/consequences and ▶ Solutions
Wheel sensor(s) missing	* There is no signal from the tyre pressure sensor in at least one wheel. No pressure value is displayed for the affected tyre. ▶ Have the faulty tyre pressure sensor replaced at a qualified specialist workshop.
Check tyre(s)	* The tyre pressure in one or more tyres has dropped significantly. The wheel position is displayed. A warning tone will also sound. ⚠ **WARNING** Risk of an accident due to insufficient tyre pressure • The tyres can burst. • The tyres can wear excessively and/or unevenly. • The driving characteristics as well as the steering and braking may be greatly impaired. You could then lose control of the vehicle. ▶ Observe the recommended tyre pressures. ▶ Adjust the tyre pressure if necessary. ▶ Stop the vehicle in accordance with the traffic conditions. ▶ Check the tyre pressure (→ page 599) and the tyres.

Display messages	Possible causes/consequences and ▶ Solutions
 Rectify tyre pressure	* The tyre pressure is too low in at least one of the tyres, or the difference in tyre pressure between the individual wheels is too great. ▶ Check the tyre pressure and add air, if necessary. ▶ When the tyre pressure is correct, restart the tyre pressure monitor (→ page 602).
 Warning tyre malfunction	* The pressure in one or more tyres has dropped suddenly. The wheel position is displayed. ⚠ **WARNING** Risk of an accident from driving with a flat tyre • The tyres can overheat and be damaged. • The driving characteristics as well as the steering and braking characteristics may be greatly impaired. You could then lose control of the vehicle. ▶ Do not drive with a flat tyre. ▶ Do not exceed the maximum permissible driving distance in emergency mode and the maximum permissible speed with a flat MOExtended tyre. ▶ Observe the notes on flat tyres. Notes on flat tyres (→ page 53). ▶ Stop the vehicle in accordance with the traffic conditions. ▶ Check the tyres.

Display messages	Possible causes/consequences and ▶ Solutions
 Tyre(s) overheated	* At least one tyre is overheating. The affected tyres are displayed in red. At temperatures close to the limit value, the tyres are displayed in yellow. ⚠ **WARNING** Risk of an accident from driving with overheated tyres Overheated tyres can burst. ▶ Reduce speed so that the tyres cool down. ▶ Reduce your speed so that the tyres cool down.
 Reduce speed	* At least one tyre is overheating. The affected tyres are displayed in red. At temperatures close to the limit value, the tyres are displayed in yellow. ⚠ **WARNING** Risk of an accident from driving with overheated tyres Overheated tyres can burst. ▶ Reduce speed so that the tyres cool down. ▶ Reduce your speed so that the tyres cool down.

Tyre pressure loss warning system

Display messages	Possible causes/consequences and ▶ Solutions
Tyre pressure Check tyres	* The tyre pressure loss warning system has detected a significant loss of pressure. ⚠ **WARNING** Risk of an accident due to insufficient tyre pressure • The tyres can burst. • The tyres can wear excessively and/or unevenly. • The driving characteristics as well as the steering and braking may be greatly impaired. You could then lose control of the vehicle. ▶ Observe the recommended tyre pressures. ▶ Adjust the tyre pressure if necessary. ▶ Stop the vehicle in accordance with the traffic conditions. ▶ Check the tyre pressure (→ page 599) and the tyres. ▶ When the tyre pressure is correct, restart the tyre pressure loss warning system (→ page 602).
Check tyre pressure, then restart Run Flat Indicator	* The tyre pressure loss warning system generated a display message and has not been restarted since. ▶ When the tyre pressure is correct, restart the tyre pressure loss warning system (→ page 602).
Run Flat Indicator inoperative	* The tyre pressure loss warning system is malfunctioning. ▶ Consult a qualified specialist workshop.

Exhaust gas aftertreatment

Display messages	Possible causes/consequences and ▶ Solutions
Refill AdBlue See Owner's Manual	* The AdBlue® level has fallen into the reserve range. ▶ Top up with at least 5 l of AdBlue®(→ page 25).
Top up AdBlue Emergency op. in XXX km See Owner's Manual	* The low AdBlue® level will lead to an output restriction after the remaining distance displayed has been covered. ▶ Top up with at least 5 l of AdBlue® (→ page 25).
Top up AdBlue XX,X l Emerg. op.: max. XXX km/h Start not poss. in XXX km	* The low AdBlue® level will lead to an output restriction from the speed displayed. After the remaining distance displayed has been covered, it will no longer be possible to start the vehicle. ▶ Top up with at least the amount of AdBlue® indicated (→ page 25).

Display messages	Possible causes/consequences and ▶ Solutions
Ad Blue Top up XX,X l AdBlue Switch vehicle on, wait 60 sec. or engine start not poss	* The AdBlue® tank is empty. You can no longer start the vehicle. ▶ Top up with at least the amount of AdBlue® indicated (→ page 25). ▶ Switch on the vehicle and wait for approximately 60 seconds. ▶ Start the vehicle.
AdBlue system fault See Owner's Manual	* The AdBlue® system is malfunctioning. ▶ Consult a qualified specialist workshop immediately.
AdBlue system malfunction Emergency op. in XXX km See Owner's Manual	* The AdBlue® system is malfunctioning. Performance will be reduced once the remaining distance displayed has been covered. ▶ Consult a qualified specialist workshop immediately.

Display messages	Possible causes/consequences and ▶ Solutions
AdBlue system malfunction Emerg. op.: max. XXX km/h Start not poss. in XXX km	* Power restriction due to the AdBlue® system fault. After the distance displayed has been covered, it will no longer be possible to start the vehicle. ▶ Consult a qualified specialist workshop immediately.
AdBlue system fault Engine start not possible	* The AdBlue® system is malfunctioning. You can no longer start the vehicle. ▶ Consult a qualified specialist workshop immediately.

Engine oil

Display messages	Possible causes/consequences and ▶ Solutions
 Add 1 litre engine oil when next refuelling	* The engine oil level has dropped to the minimum level. **NOTE** Engine damage caused by driving with insufficient engine oil ▶ Avoid long journeys with insufficient engine oil. ▶ When next refuelling, add 1 litre of engine oil (→ page 558). Notes on engine oil (→ page 742).
 Engine oil level Reduce oil level	* The engine oil level is too high. **NOTE** Engine damage caused by driving with excess engine oil ▶ Avoid long journeys with excess engine oil. ▶ Consult a qualified specialist workshop immediately and have the engine oil level reduced.
 Engine oil level Stop Switch off the vehicle	* The engine oil level is too low. **NOTE** Engine damage caused by driving with insufficient engine oil ▶ Avoid long journeys with insufficient engine oil. ▶ Stop the vehicle immediately in accordance with the traffic conditions. Do not continue driving.

Display messages	Possible causes/consequences and ▶ Solutions
	▶ Switch off the vehicle. ▶ Add 1 l of engine oil (→ page 558). ▶ Check the engine oil level. Notes on engine oil (→ page 742).
 Engine oil pressure Stop Switch off the vehicle	* The oil pressure is too low. **NOTE** Engine damage caused by driving with insufficient oil pressure ▶ Avoid driving with insufficient oil pressure. ▶ Stop the vehicle immediately in accordance with the traffic conditions. Do not continue driving. ▶ Switch off the vehicle. ▶ Consult a qualified specialist workshop.
 Engine oil level cannot be measured	* The electrical connection to the oil level sensor has been interrupted or the oil level sensor is faulty. ▶ Consult a qualified specialist workshop.

Warning and indicator lamps

Overview of indicator and warning lamps

Some systems will perform a self-test when the vehicle is switched on. Some indicator and warning lamps may briefly light up or flash. This behaviour is non-critical. These indicator and warning lamps indicate a malfunction only if they light up or flash after the vehicle has been started or during a journey.

Standard driver's display

Widescreen cockpit driver's display

Indicator and warning lamps

Occupant safety

- Restraint system (→ page 840)
- Seat belt (→ page 840)
- Occupant presence reminder (white) (→ page 840)
- Occupant presence reminder (yellow) (→ page 840)

Drive system

- Reduced power (→ page 842)
- System error (→ page 842)
- Electrical fault (→ page 842)

Vehicle

- Trailer hitch (→ page 843)
- Power steering (yellow) (→ page 843)
- Power steering (red) (→ page 843)

Engine

- Vehicles with a widescreen cockpit: coolant temperature (→ page 845)
- Engine diagnostics (→ page 845)
- Vehicles with a petrol engine: engine operating temperature (→ page 845)
- Engine operating temperature (Mercedes-AMG vehicles) (→ page 845)
- Vehicles with a diesel engine: preglow
- Electrical fault (→ page 845)
- Reserve fuel with fuel filler flap location indicator (→ page 845)

Brakes

- Electric parking brake (yellow) (→ page 849)
- Electric parking brake (red) (→ page 849)
- Brakes (yellow) (→ page 849)
- Brakes (red) (→ page 849)

Driving and driving safety systems

- ABS (→ page 851)
- ESP® (→ page 851)
- ESP® OFF (→ page 851)
- ESP® OFF (→ page 851)
- ESP® OFF (→ page 851)
- ESP® SPORT (→ page 851)
- ATTENTION ASSIST (→ page 851)
- Traffic Sign Assist (→ page 851)
- Speed Limit Assist (→ page 851)
- Distance warning (→ page 851)
- Active Brake Assist (→ page 851)
- Active Brake Assist (→ page 851)

- Indicator lamp inoperative
- AMG RIDE CONTROL (→ page 851)

Mercedes-Benz emergency call system

- Mercedes-Benz emergency call system (→ page 857)

Tyre pressure monitoring system

- Tyre pressure monitoring system (→ page 857)

Exterior lighting

- Side lights (→ page 199)
- Low beam (→ page 199)
- High beam (→ page 201)
- Turn signal lights (→ page 201)
- Rear fog light (→ page 199)

Symbols on the central display

- Drive Away Assist (→ page 368)
- Cross Traffic Alert (→ page 369)
- Manoeuvring brake function (→ page 369)

Occupant safety

Warning/indicator lamp	Possible causes/consequences and ▶ Solutions
Restraint system warning lamp	* The restraint system red warning lamp is lit while the vehicle is on. The restraint system is malfunctioning (→ page 101). ⚠ **WARNING** Risk of injury due to malfunctions in the restraint system Components in the restraint system may be activated unintentionally or not deploy as intended in an accident. ▶ Have the restraint system checked and repaired immediately at a qualified specialist workshop. **Plug-in hybrid:** ⚠ **DANGER** Risk of fatal injuries due to restraint system malfunctions Components in the restraint system may be activated unintentionally or not deploy as planned in an accident. In the event of an accident, the high-voltage on-board electrical system may not be deactivated as intended. You may suffer an electric shock if you touch the damaged components of the high-voltage on-board electrical system. ▶ Have the restraint system checked and repaired immediately at a qualified specialist workshop. ▶ After an accident, switch off the vehicle immediately. ▶ Drive on carefully. ▶ Note the messages on the driver's display.

Warning/indicator lamp	Possible causes/consequences and ▶ Solutions
	▶ Consult a qualified specialist workshop immediately.
 Seat belt warning lamp flashes	* The red seat belt warning lamp flashes and an intermittent warning tone sounds. The driver or front passenger has not fastened their seat belt while the vehicle is in motion. ▶ Fasten your seat belt (→ page 101). There are objects on the front passenger seat. ▶ Remove the objects from the front passenger seat.
 Seat belt warning lamp lights up	* The red seat belt warning lamp lights up once the vehicle has started. In addition, an intermittent warning tone may sound. The red seat belt warning lamp reminds the driver and front passenger to fasten their seat belts. ▶ Fasten your seat belt (→ page 101). If you have placed objects on the front passenger seat, the red seat belt warning lamp may remain lit.
  Occupant presence reminder warning lamp (white)	* The white occupant presence reminder warning lamp is lit. The occupant presence reminder is deactivated.

Warning/indicator lamp	Possible causes/consequences and ▶ Solutions
Occupant presence reminder warning lamp (yellow)	* The yellow occupant presence reminder warning lamp is lit. The occupant presence reminder is malfunctioning ▶ Note the messages on the driver's display.

Drive system

Warning/indicator lamp	Possible causes/consequences and ▶ Solutions
Reduced-power warning lamp	* The yellow reduced-power warning lamp is on. Drive system power output is reduced. ▶ Note the messages on the driver's display.
System error warning lamp	* The red system error warning lamp is lit while the vehicle is in a state of operational readiness READY. There is a malfunction in the drive system. ▶ Note the messages on the driver's display.

Warning/indicator lamp	Possible causes/consequences and ▶ Solutions
Electrical fault warning lamp	* The red electrical fault warning lamp is lit. There is a fault with the electrics. ▶ Note the messages on the driver's display.

Vehicle

Warning/indicator lamp	Possible causes/consequences and ▶ Solutions
Trailer hitch warning lamp	* The red trailer hitch warning lamp is lit. The trailer hitch is not operational. ⚠ **WARNING** Risk of an accident if the ball neck is not locked The trailer may become detached. ▶ Stop the vehicle immediately in accordance with the traffic conditions. Do not continue driving. ▶ Uncouple the trailer and secure it against rolling away. ▶ Initiate a new swivelling procedure and do not re-couple the trailer until the display message disappears. ▶ Note the messages on the driver's display.

Warning/indicator lamp	Possible causes/consequences and ▶ Solutions
Power steering warning lamp (yellow)	* The yellow power steering warning lamp is lit while the vehicle is running. The power assistance or the steering itself is malfunctioning. ▶ Note the messages on the driver's display.
Power steering warning lamp (red)	* The red power steering warning lamp is lit while the vehicle is running. The power assistance or the steering itself is malfunctioning. ⚠ **WARNING** Risk of accident if steering capability is impaired If the steering does not function as intended, the vehicle's operating safety is jeopardised. ▶ Pull over and stop the vehicle safely as soon as possible, paying attention to road and traffic conditions. Do not continue driving under any circumstances. ▶ Consult a qualified specialist workshop. ▶ Note the messages on the driver's display.

Engine

Warning/indicator lamp	Possible causes/consequences and ▶ Solutions
 Coolant warning lamp (red)	* The red coolant warning lamp is lit while the engine is running. Possible causes: • The temperature sensor is malfunctioning • The coolant level is too low • The air supply to the radiator is obstructed • The radiator fan is faulty • The engine coolant pump is faulty If there is an additional warning tone, the coolant temperature has exceeded 120°C. ⚠ **WARNING** Risk of burns when opening the bonnet If you open the bonnet in the event of an overheated engine or fire in the engine compartment, the following situations may occur: • You may come into contact with hot gases. • You may come into contact with other escaping hot operating fluids. ▶ Before opening the bonnet, allow the engine to cool down. ▶ In the event of a fire in the engine compartment, keep the bonnet closed and call the fire service.

Warning/indicator lamp	Possible causes/consequences and ▶ Solutions
	▶ Stop immediately in accordance with the traffic conditions and switch off the vehicle. Do not continue driving. ▶ Note the messages on the driver's display. **If the coolant temperature display is at the lower end of the temperature scale:** ▶ Consult a qualified specialist workshop. **If the coolant temperature display is at the upper end of the temperature scale:** ▶ Exit the vehicle and keep a safe distance from it until the engine has cooled down. ▶ Check the coolant level (→ page 560). ▶ Make sure that the air supply to the radiator is not obstructed. ▶ Avoiding high loads on the engine, drive to the nearest qualified specialist workshop. In doing so, ensure that the coolant temperature display remains below 120°C.
 Coolant warning lamp (yellow)	* The yellow coolant warning lamp is lit while the engine is running. Possible causes: • The temperature sensor is malfunctioning • The charge air, transmission oil or battery cooling is faulty • The radiator shutters are blocked or defective ▶ Avoiding high loads on the engine, drive to the nearest qualified specialist workshop.

Warning/indicator lamp	Possible causes/consequences and ▶ Solutions
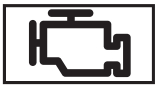 Engine diagnostics warning lamp	* The yellow engine diagnostics warning lamp is lit while the engine is running. A malfunction has occurred in the engine, the exhaust system or the fuel system. The emissions limit value may have been exceeded and the engine may be running in emergency operation mode. ▶ Have the vehicle checked as soon as possible at a qualified specialist workshop. **Vehicles with a diesel engine:** the fuel tank may have been run dry. ▶ Start the engine three to four times after refuelling. If the yellow engine diagnosis warning lamp goes out, emergency operation mode is cancelled. The vehicle need not be checked.
 Electrical fault warning lamp	* The red electrical fault warning lamp is lit. There is a fault in the electrics. ▶ Note the messages on the driver's display.
 Engine operating temperature warning lamp	*The blue warning lamp for engine operating temperature will remain lit until the engine operating temperature has been reached. The engine output and engine torque will remain reduced until then. ▶ Take this into consideration in your driving style.

Warning/indicator lamp	Possible causes/consequences and ▶ Solutions
Engine operating temperature warning lamp	* **Vehicles with a petrol engine:** after a cold start, the blue engine operating temperature warning lamp is on. Engine output and engine torque are reduced. ▶ Take this into consideration in your driving style.
Fuel reserve warning lamp lights up	* The yellow fuel reserve warning lamp lights up while the engine is running. The fuel supply has dropped into the reserve range. ▶ Refuel.

Brakes

Warning/indicator lamp	Possible causes/consequences and ▶ Solutions
Electric parking brake indicator lamp (red) Electric parking brake indicator lamp (yellow)	* The red electric parking brake indicator lamp flashes or is lit. The yellow electric parking brake indicator lamp is also lit in the event of a malfunction. ▶ Note the messages on the driver's display.
Brakes warning lamp (yellow)	* The yellow brake warning lamp is lit while the vehicle is running. ⚠ **WARNING** Risk of an accident due to a brake system malfunction If the brake system is malfunctioning, braking characteristics may be impaired. ▶ Drive on carefully. ▶ Have the brake system checked immediately at a qualified specialist workshop. ▶ Adjust your speed and drive on carefully, leaving a suitable distance to the vehicle in front. ▶ If the driver's display shows a display message, observe it.

Warning/indicator lamp	Possible causes/consequences and ▶ Solutions
	▶ Consult a qualified specialist workshop.
 Brakes warning lamp (red)	* The red brakes warning lamp is lit while the vehicle is running. Possible causes: • The brake force boosting is malfunctioning and the braking characteristics may be affected. • There is insufficient brake fluid in the brake fluid reservoir. ▶ Note the messages on the driver's display. ⚠ **WARNING** Risk of accident and injury if brake force boosting is malfunctioning If brake force boosting is malfunctioning, increased brake pedal force may be necessary for braking. The braking characteristics may be impaired. The braking distance can increase in emergency braking situations. ▶ Stop in a safe location immediately. Do not continue driving! ▶ Consult a qualified specialist workshop. ⚠ **WARNING** Risk of an accident due to low brake fluid level If the brake fluid level is too low, the braking effect and the braking characteristics may be impaired. ▶ Stop the vehicle as soon as possible, paying attention to road and traffic conditions. Do not continue driving. ▶ Consult a qualified specialist workshop. ▶ Do not top up the brake fluid.

Driving and driving safety systems

Warning/indicator lamp	Possible causes/consequences and ▶ Solutions
 ABS warning lamp	* The yellow ABS warning lamp is lit while the vehicle is running. ABS is malfunctioning. If an additional warning tone sounds, EBD is malfunctioning. Other driving systems and driving safety systems may also be malfunctioning. ▶ Note the messages on the driver's display. ⚠ **WARNING** There is a risk of skidding if EBD or ABS is malfunctioning The wheels may lock during braking. The steerability and braking characteristics are heavily impaired and the braking distance may increase. In addition, other driving safety systems are switched off. ▶ Drive on carefully. ▶ Have the brake system checked immediately at a qualified specialist workshop. ▶ Drive on carefully. ▶ Consult a qualified specialist workshop.

Warning/indicator lamp	Possible causes/consequences and ▶ Solutions
 ESP® warning lamp flashes	* The yellow ESP® warning lamp flashes while the vehicle is in motion. One or more wheels have reached their grip limit (→ page 305). One or more wheels have reached their grip limit (→ page 306). ▶ Adapt your driving style to suit the road and weather conditions.
 ESP® warning lamp lights up	* The yellow ESP® warning lamp is lit while the vehicle is running. ESP® is malfunctioning. Other driving systems and driving safety systems (e.g. BAS) may also be malfunctioning. ▶ Note the messages on the driver's display. ⚠ **WARNING** Risk of skidding if ESP® is malfunctioning If ESP® is malfunctioning, ESP® cannot carry out vehicle stabilisation. In addition, other driving safety systems are switched off. ▶ Drive on carefully. ▶ Have ESP® checked at a qualified specialist workshop. ▶ Drive on carefully. ▶ Consult a qualified specialist workshop immediately.

Warning/indicator lamp	Possible causes/consequences and ▶ Solutions
 ESP® OFF warning lamp	* The yellow ESP® OFF warning lamp is lit while the vehicle is running. ESP® is deactivated. Other driving systems and driving safety systems may also be inoperative. ⚠ **WARNING** Risk of skidding when driving with ESP® deactivated ESP® does not act to stabilise the vehicle. The availability of further driving safety systems is also limited. ▶ Drive on carefully. ▶ Deactivate ESP® only for as long as the situation requires. If ESP® cannot be activated, ESP® is malfunctioning. ▶ Have ESP® checked immediately at a qualified specialist workshop. ▶ Observe the notes on deactivating ESP® (→ page 305).
	* The yellow ESP® OFF warning lamps are lit while the vehicle is running. ESP® is deactivated. Other driving systems and driving safety systems may also be inoperative. ⚠ **WARNING** Risk of skidding when driving with ESP® deactivated ESP® does not act to stabilise the vehicle. The availability of further driving safety systems is also limited.

Warning/indicator lamp	Possible causes/consequences and ▶ Solutions
	▶ Drive on carefully. ▶ Deactivate ESP® only for as long as the situation requires. If ESP® cannot be activated, ESP® is malfunctioning. ▶ Have ESP® checked immediately at a qualified specialist workshop. ▶ Observe the notes on deactivating ESP® (→ page 306).
OFF ESP SPORT	* ESP® SPORT is activated while the vehicle is running. When ESP® SPORT is activated, ESP® will stabilise the vehicle only to a limited extent. ⚠ **WARNING** Risk of skidding if ESP® SPORT is used incorrectly When you activate ESP® SPORT, there is an increased risk of skidding and having an accident. ▶ Activate ESP® SPORT only in the circumstances described below. ▶ Observe the notes on activating ESP® SPORT(→ page 306).
OFF ATTENTION ASSIST warning lamp	* The ATTENTION ASSIST warning lamp is lit. ATTENTION ASSIST is malfunctioning. ▶ Consult a qualified specialist workshop.

Warning/indicator lamp	Possible causes/consequences and ▶ Solutions
Traffic Sign Assist warning lamp	* The Traffic Sign Assist warning lamp is lit. Traffic Sign Assist is malfunctioning. ▶ Note the messages on the driver's display.
Speed Limit Assist warning lamp	* The Speed Limit Assist warning lamp is lit. Speed Limit Assist is malfunctioning. ▶ Note the messages on the driver's display.
Warning lamp for distance warning	* The red distance warning lamp lights up while the vehicle is in motion. The distance to the vehicle in front is too small for the speed selected. If there is an additional warning tone, you are approaching an obstacle at too high a speed. ▶ Be prepared to brake immediately. ▶ Increase the distance. Function of Active Brake Assist (→ page 330).

Warning/indicator lamp	Possible causes/consequences and ▶ Solutions
Active Brake Assist warning lamp	* The Active Brake Assist warning lamp is on. Due to dirty sensors or a malfunction, the system is not available or the range of functions is restricted. ▶ Note the messages on the driver's display.
Active Brake Assist warning lamp	* The Active Brake Assist warning lamp is on. The system is switched off or the range of functions has been automatically restricted. This may be the case if another driving system has been activated. ▶ Observe the notes on Active Brake Assist (→ page 330).
Suspension warning lamp (yellow)	* The yellow AMG RIDE CONTROL warning lamp is lit. There is a fault in the AMG RIDE CONTROL. ▶ Note the messages on the driver's display.

Mercedes-Benz emergency call system

Warning/indicator lamp	Possible causes/consequences and ▶ Solutions
SOS NOT READY Mercedes-Benz emergency call system warning lamp	*The Mercedes-Benz emergency call system is malfunctioning. The Mercedes me connect system is also malfunctioning. ▶ Consult a qualified specialist workshop.

Tyre pressure monitor

Warning/indicator lamp	Possible causes/consequences and ▶ Solutions
Tyre pressure monitoring system warning lamp flashes	*The yellow tyre pressure monitor warning lamp (pressure loss/malfunction) flashes for approximately one minute and then remains lit. The tyre pressure monitoring system is malfunctioning. ⚠ **WARNING** There is a risk of an accident if the tyre pressure monitoring system is malfunctioning The tyre pressure monitoring system cannot issue a warning if there is pressure loss in one or more of the tyres. Tyres with insufficient tyre pressure may impair the driving characteristics as well as steering and braking. ▶ Have the tyre pressure monitoring system checked at a qualified specialist workshop. ▶ Consult a qualified specialist workshop.

Warning/indicator lamp	Possible causes/consequences and ▶ Solutions
Tyre pressure monitoring system warning lamp lights up	* The yellow tyre pressure monitoring system warning lamp (pressure loss/malfunction) is lit. The tyre pressure monitoring system has detected tyre pressure loss in at least one of the tyres. ⚠ **WARNING** Risk of an accident due to insufficient tyre pressure • The tyres can burst. • The tyres can wear excessively and/or unevenly. • The driving characteristics as well as the steering and braking may be greatly impaired. You could then lose control of the vehicle. ▶ Observe the recommended tyre pressures. ▶ Adjust the tyre pressure if necessary. ▶ Stop the vehicle in accordance with the traffic conditions. ▶ Check the tyre pressure and the tyres.

1, 2, 3 ...

4MATIC 265

48 V on-board electrical system
- Displays in the driver's display 395
- Operating safety 80

A

A/C function
- Activating/deactivating (operating unit) 220
- Switching on/off (MBUX) 220

ABS 305

Acceleration
- Kickdown 264

Access data
- Setting (Bluetooth®) 530

Accident
- ERA-GLONASS test mode 526

Accident, emergency call 59, 523

Activating/deactivating the acoustic locking verification signal 142

Active bonnet 554

Active bonnet (pedestrian protection)
- Resetting 554

Active Brake Assist
- Function 330
- Setting 334

Active Distance Assist DISTRONIC
- Activate/deactivate variable limiter 321
- Activating/deactivating 321
- Active Emergency Stop Assist 329
- Active Speed Limit Assist 324
- Calling up a speed 321
- Function 318
- Increases/decreases the speed 321
- Route-based speed adaptation 325
- Storing a speed 321

Active Emergency Stop Assist 329

Active headlamps 202

Active Lane Keeping Assist
- Activating/deactivating 347
- Function 345
- Setting the sensitivity 347
- Trailer operation 345

Active light function 202

Active Parking Assist
- Automatic braking function 368
- Exiting a parking space 365
- Function 362
- Manoeuvering brake function 369
- Parking 364
- Pausing 367

Active Service System PLUS 552

Active Speed Limit Assist 324

Active Steering Assist
- Activating/deactivating 329
- Active Emergency Stop Assist 329
- Function 327

Adaptive brake lights 313

Adaptive cruise control 325

Adaptive Damping System
- Suspension 347

Adaptive Highbeam Assist
- Activating/deactivating 205

Adaptive Highbeam Assist Plus
- Switching on/off 207

AdBlue®
- Additives 741

Capacity..... 742
Fill level..... 388
Notes..... 270
Purity..... 741
Range..... 388
Topping up..... 25, 271

Additional door lock..... 145

Additives
AdBlue®..... 25, 271, 741
Engine oil..... 742
Fuel..... 739

Adjusting bass, mid-range and treble settings
Advanced sound system..... 550

Adjusting mid-range, treble and bass settings
Advanced sound system..... 550

Adjusting the balance/fader
Advanced sound system..... 551
Burmester® surround sound system..... 549

Adjusting the bass, mid-range and treble
Burmester® surround sound system..... 549

Adjusting the mid-range, treble and bass
Burmester® surround sound system..... 549

Adjusting the sound focus
Burmester® surround sound system..... 550

Adjusting treble, mid-range and bass settings
Advanced sound system..... 550
Burmester® surround sound system..... 549

Advanced sound system
Adjusting the balance/fader..... 551
Adjusting treble, mid-range and bass settings..... 550
Calling up the sound menu..... 550
Information..... 550
Switching loudness normalisation on/off..... 551

After-sales service..... 552

Air conditioning menu
Air distribution..... 221
Climate control..... 220
Stationary heater/ventilation..... 227

Air distribution
Overview..... 221
Setting..... 217, 221

Air inlet..... 562

Air pressure..... 599

Air vents
Setting..... 227

Air/water duct..... 562

Airbag
Inflating..... 108
Overview..... 114
PASSENGER AIR BAG indicator lamps.... 103
Warning lamp..... 101

Airflow
Setting..... 217

Alarm system..... 161

All-wheel drive..... 265

Alternative route..... 459, 467

Ambient lighting..... 208

AMG DYNAMIC SELECT
Setting drive programs..... 256

AMG Performance
Information..... 20

AMG Real Performance Sound..... 249

AMG RIDE CONTROL
Selecting the suspension setting..... 348
Suspension..... 348
AMG steering wheel buttons
Setting..... 251
AMG steering-wheel buttons
Function..... 250
AMG TRACK PACE
Configuring..... 444
Drag Race..... 443
Function..... 441
Telemetry display..... 444
Track Race..... 441
Android Auto
Connecting a mobile phone (wired)..... 511
Connecting a mobile phone (wireless).... 512
Ending..... 513
Information..... 511
Sound settings..... 513
Transferred vehicle data..... 513
Android smartphone..... 511
Animals..... 109
Anti-lock braking system..... 305
Anti-theft alarm system..... 161
Anti-theft protection
Additional door lock..... 145
Immobiliser..... 161
Anticipatory operating-mode strategy, Route-based..... 249
Apple CarPlay®, Smartphone
Connecting an iPhone® (cable)..... 509
Connecting an iPhone® (wireless)..... 510
Ending..... 510
Notes..... 509
Overview..... 508
Sound settings..... 510
Transferred vehicle data..... 513
Apps, Mercedes me
Mercedes me calls..... 514
Mercedes me connect..... 518
Selecting (MBUX multimedia system)..... 521
Assembly licence plate, front..... 83
Assistance system..... 304
Assistant display
Menu (driver display)..... 388
ASSYST PLUS
Battery disconnection periods..... 553
Service interval display..... 552
Service requirements..... 552
ATA
Deactivating the alarm..... 162
Function..... 161
Interior protection..... 163
Interior protection function..... 162
Tow-away protection..... 162
Tow-away protection function..... 162
ATTENTION ASSIST
Function..... 313
Setting..... 315
Attention assistant..... 313
Augmented reality
MBUX route guidance..... 479
Authorisations
Setting..... 433
Authorised workshop..... 91
Automatic car wash..... 30, 563
Automatic car wash mode..... 564
Automatic climate control..... 220

Automatic co-driver airbag shutoff
Function ... 105
Automatic distance control ... 318
Automatic driving lights ... 200
Automatic emergency call ... 524
Automatic engine start/stop ... 241
Automatic front passenger airbag shutoff
Information (child restraint system on the front passenger seat) ... 120
PASSENGER AIR BAG indicator lamps ... 103
Automatic measures after an accident ... 107
Automatic mirror folding function ... 216
Automatic seat adjustment ... 176
Automatic transmission
DIRECT SELECT lever ... 257
Drive programs ... 251, 252
DYNAMIC SELECT button ... 251, 252
Engages neutral ... 258
Engaging drive position ... 261
Engaging reverse gear ... 258
Faulty gear shift ... 261
Gear shift ... 257
Kickdown ... 264
Manual shifting ... 262, 263
Oil temperature (driver's display) ... 389, 390
Selecting park position ... 259
Steering wheel gearshift paddles ... 262, 263
Transmission position display ... 257
Transmission positions ... 257
Autonomous braking ... 330
Axle load
Trailer operation ... 754
Trailer operation (Mercedes-AMG vehicles) ... 754

B

Ball neck
Folding out/in ... 39, 372
Trailer coupling ... 374
BAS ... 305
Basic information ... 98
Battery
High-voltage battery ... 583
Battery (12 V battery)
Charging ... 50, 586
Notes ... 581
Notes (starting assistance and charging) ... 584
Replacing ... 587
Starting assistance ... 50, 586
Battery (48 V)
Notes ... 582
Battery (high-voltage on-board electrical system) ... 750
Battery (key) ... 144
Battery (starter battery)
Charging via Remote Online ... 235
Battery operation ... 229
Belt
Fastening ... 101
Notes on wearing correctly ... 100
Releasing ... 113
Bicycle rack
Load capacity ... 753
Load capacity (Mercedes-AMG vehicles) ... 754
Trailer operation ... 376
Blind Spot Assist
Activating/deactivating ... 345

Function..... 343

BlueTec
AdBlue®..... 270

Bluetooth®
Connecting a mobile phone..... 10, 495
Information..... 434
Setting up an Internet connection..... 530
Switching on/off..... 434

Bonnet
Active bonnet..... 554
Opening/closing..... 555
Resetting (active bonnet)..... 554

Boost pressure, current (driver's display)
..... 389, 390

Boot floor
Opening..... 39, 190

Boot lid
Closing..... 151
HANDS-FREE ACCESS..... 151
Limiter..... 153
Opening..... 150

Brake Assist
Active Brake Assist..... 330
Brake Assist System..... 305

Brake Assist System..... 305

Brake disks..... 237

Brake fluid..... 745

Brake force distribution..... 310

Brake lamps
Adaptive brake lights..... 313

Brake pads..... 237

Brakes
ABS (Anti-lock Braking System)..... 305
Active Brake Assist..... 330
Adaptive brake lights..... 313
BAS (Brake Assist System)..... 305
Driving tips..... 238
EBD (Electronic Brakeforce Distribution)..... 310
Electric parking brake..... 297
Handbrake..... 297
HOLD function..... 311
Limited braking effect (salt-treated roads)..... 238
New/replaced brake pads/brake discs.. 237
Parking brake..... 297
Post-collision brake..... 107
Recuperation..... 246
Running-in notes..... 237

Braking assistance
Active Brake Assist..... 330
Brake Assist System..... 305

Breakdown
Flat tyre..... 53, 574
Overview of aids..... 74
Tow-starting..... 594
Towing methods..... 54, 590
Transporting the vehicle..... 592
Wheel change..... 608

Burmester® surround sound system
Adjusting the balance/fader..... 549
Adjusting the sound focus..... 550
Adjusting treble, mid-range and bass settings..... 549
Automatic loudness normalisation..... 549
Calling up the sound menu..... 549
Information..... 549
Selecting the sound profile..... 550

C

Call list
- Deleting ... 503
- Making a call ... 503
- Overview ... 502
- Selecting options ... 503

Calling the customer centre for Mercedes-Benz ... 515

Calling up a web page ... 532

Calling up the sound menu
- Advanced sound system ... 550
- Burmester® surround sound system ... 549

Calls, Telephone operation
- Accepting ... 499
- Activating functions during a call ... 499
- Calls with several participants ... 500
- Declining ... 499
- Ending a call ... 499
- Incoming call during an existing call ... 500
- Making ... 499
- Mercedes me ... 514
- Telephone ... 499
- Using overhead control panel ... 514
- Using the international dialling code ... 500

Camera
- 360° camera ... 353
- Button ... 358
- Care ... 567
- Cleaning ... 567
- Function ... 353
- Information ... 303
- Opening the camera cover (reversing camera) ... 358
- Reversing camera ... 350
- Select view ... 358

Car key ... 141

Car wash
- Automatic car wash ... 30, 563
- Car wash mode ... 563
- High-pressure cleaner ... 564
- Washing by hand ... 565

Car-to-X-Communication
- Display on map ... 479
- Overview ... 478
- Sending hazard warnings ... 479

Care
- Air/water duct ... 562
- Automatic car wash ... 30, 563
- Camera ... 567
- Car parts ... 567
- Car wash mode ... 563
- Decorative foil ... 566
- Display ... 568
- Exterior lighting ... 567
- Genuine wood/trim elements ... 568
- Head-up display ... 568
- High-pressure cleaner ... 564
- Paint ... 565
- Plastic trim ... 568
- Roof lining ... 568
- Seat belt ... 568
- Steering wheel ... 568
- Trailer hitch ... 567
- Vehicle interior ... 568
- Vehicle socket for the high-voltage battery ... 567
- Washing by hand ... 565
- Wheels/rims ... 567

Care of the plastic trim ... 568

Care of the roof lining ... 568

Care of the steering wheel ... 568

Caring for rims ... 567

Central display
Operating..... 413
Central locking system
Button..... 146
Key..... 142
Centre console
Lower MBUX control panel..... 414
Changing bulbs
Fitting/removing cover (front wheel arch)..... 210
Overview..... 210
Changing illuminants
Notes..... 209
Charge level display..... 290
Charge level/charge display..... 290
Charging
12 V battery..... 50, 586
At time of departure..... 446
Charge level display..... 290
Charging cable control panel..... 280
Charging station, mode 3..... 277
Configuring weekly profile..... 446
Ending the charging process (alternating current, mode 2/3)..... 285
Ending the charging process (direct current, mode 4)..... 288
Flexible charging system Pro..... 280
Indicator lamps on vehicle socket..... 281
Mains socket, mode 2..... 276
Maximum charging current (mains socket)..... 279
Notes on charging the high-voltage battery..... 273
Notes on the high-voltage battery..... 583
Rapid charging station, mode 4..... 278
Recuperation..... 246
Starting the charging process (alternating current, mode 2/3)..... 283
Starting the charging process (direct current, mode 4)..... 287
Stowing the charging cable..... 275
USB port..... 42, 185, 195
Wallbox, mode 3..... 277
Charging cable
Control panel..... 280
Flexible charging system Pro..... 280
Stowing..... 275
Charging process
Paying..... 460
Charging settings..... 446
Charging system..... 280
Checking the coolant level..... 560
Checking tyre
pressure..... 601
Child safety lock
Rear door..... 137
Side window (rear)..... 138
Child seat
Adjusting the vehicle seat..... 131
Approval categories..... 122
Basic instructions..... 116
Brief overview of most important points..... 115
Fitting ISOFIX/i-Size..... 133
Front passenger seat..... 120
Overview of warning stickers..... 119
Rearward-facing..... 122
Recommendations for child restraint systems..... 124
Risks/dangers..... 117
Seats suitable for belt-secured child restraint systems..... 129

Seats suitable for i-Size child restraint systems..... 129
Seats suitable for ISOFIX child restraint systems..... 127
Securing to the front passenger seat with the seat belt..... 136
Securing to the rear seat with the seatbelt..... 136
Top Tether..... 134
Without automatic co-driver airbag sh utoff..... 122

Children
Avoiding dangers in the vehicle..... 117
Basic instructions..... 116

Chock..... 53, 607

City lighting..... 203

Classic menu display content
Selecting..... 382, 385

Clean varnish..... 565

Cleaning
Air/water duct..... 562
Automatic car wash..... 30, 563
Camera..... 567
Car parts..... 567
Car wash mode..... 563
Decorative foil..... 566
Genuine wood/trim elements..... 568
High-pressure cleaner..... 564
Paint..... 565
Sensors..... 567
Vehicle interior..... 568
Vehicle socket for the high-voltage battery..... 567
Washing by hand..... 565

Cleaning carpet..... 568

Cleaning the seat cover..... 568

Climate control, Air conditioning system, Blower, Cooling
Activating/deactivating..... 220
Activating/deactivating the A/C function (control panel)..... 220
Activating/deactivating the synchronisation function (control panel)..... 221
Air distribution settings..... 221
Air vents (front)..... 227
Air vents (rear)..... 228
Automatic control..... 220
Closing/opening the windows (air-recirculation button)..... 56
Demisting the windscreen..... 217
Demisting windows..... 222
Immediate pre-entry climate control..... 225
Notes..... 217
Overview of systems..... 217
Pre-entry climate control for departure time..... 223
Pre-entry climate control using the key... 222
Resetting the climate control settings..... 57
Residual heat..... 222
Setting the air distribution..... 217
Setting the airflow..... 217
Setting the vehicle interior temperature..... 217
Stationary heater/ventilation..... 226
Switching air-recirculation mode on/off..... 222
Switching the A/C function on/off (MBUX)..... 220
Switching the rear window heater on/off..... 217
Synchronisation function..... 221
Ventilation with comfort opening..... 155

Climate control settings
Resetting..... 57

Co-driver airbag shutoff, PASSENGER AIR BAG OFF 105
COC papers, Certificate of conformity 616
Cockpit
Dashboard 62, 64
Coffee cup symbol 313
Collision detection (parked vehicle)
Setting 300, 301
Combination switch
Lights 201
Windscreen wipers 211
Comfort
Information 19
Communication module
Disconnecting automatically from the Internet 529
Setting up an Internet connection 529
Commuter route 459, 468
Compass 485
Components subject to radio regulations
Declaration of conformity 84
Connection status
Displaying 532
Overview 532
Contacts, Address book, Phone book
Calling up 501
Deleting 502
Importing 502
Importing (overview) 501
Information 501
Making a call 502
Name format 501
Note about suggestions 498
Options 502
Selecting options for suggestions 499
Storing 502
Control element (MBUX multimedia system)
Setting acoustic feedback 413
Control elements: 79
Convenience closing 156
Convenience feature
Closing/opening the windows (air-recirculation button) 56
Convenience opening 155
Coolant
Notes 745
Copyright 97
Cornering light 203
Correct use 92
Cover 157
Cross traffic (warning) 369
Cross Traffic Alert, Cross traffic warning 369
Crosswind Assist 308
Cruise control
activating/deactivating 316
Calling up a speed 316
Function 315
Requirements: 316
Setting a speed 316
Storing a speed 316
Cup holder
Rear 193

D

Damage
Limited protection 109

Dashboard
Cockpit..... 62, 64
Dashcam
Configuring settings..... 492
Selecting a USB device..... 490
Starting/stopping individual recordings..... 491
Starting/stopping loop recording..... 491
Data processing in the vehicle..... 94
Data protection
Granting authorisations..... 433
Data protection rights..... 97
Data storage
Data protection rights..... 97
Electronic control units..... 94
Online services..... 96
Deactivating the alarm..... 162
Dealership..... 91
Declaration of conformity
Components subject to radio regulations..... 84
Electromagnetic compatibility..... 83
Jack..... 86
TIREFIT kit..... 87
Decorative foil..... 566
DeNOx agent
AdBlue®..... 270
Deployed components
Limited protection..... 109
Deployment situations..... 108
Destination
Editing a suggestion..... 475
Editing intermediate destinations..... 466
Editing the previous destinations..... 474
Saving as a favourite..... 474
Destination entry
Accepting a destination suggestion..... 454
Entering a 3 word address..... 456
Entering an intermediate destination..... 466
Entering geo-coordinates..... 456
Selecting a contact..... 456
Selecting a received destination..... 458
Selecting from favourites..... 458
Selecting from the map..... 457
Selecting previous destinations..... 454
Destination entry (multimedia system)
Notes..... 453
Selecting a POI..... 455
Detecting inattentiveness..... 313
Diagnostics connection..... 90
Diesel
Low outside temperatures..... 739
Notes..... 739
Digital Owner's Manual..... 76
Direct commands
Voice commands for MBUX voice assistant..... 405
DIRECT SELECT lever
Automatic transmission..... 257
Engages neutral..... 258
Engaging drive position..... 261
Engaging park position automatically..... 259
Engaging reverse gear..... 258
Function..... 257
Gearshift recommendation..... 264
Manual gearshifting..... 262, 263
Selecting park position..... 259
Display
Care..... 568

Display (driver's display)
Overview of displays..... 396, 397
Display (MBUX multimedia system)
Settings..... 432
Display message
Calling up on driver display..... 755
Notes..... 755
Display messages
--- km/h..... 815
LIM --- km/h..... 812
--- km/h..... 811
12 V on-board electrical system Visit workshop..... 825
48 V battery See Owner's Manual..... 827
Acoustic presence indicator inoperative..... 780
Active Light System inoperative.... 767
AdBlue system fault Engine start not possible..... 835
AdBlue system fault See Owner's Manual..... 834
AdBlue system malfunction Emerg. op.: max. XXX km/h Start not poss. in XXX km..... 835
AdBlue system malfunction Emergency op. in XXX km See Owner's Manual..... 834
Add 1 litre engine oil when next refuelling..... 836
ATTENTION ASSIST: Take a break!..... 811
Automatic driving lights inoperative..... 767
Battery overheated Stop, everybody out! Outdoors if possible 782, 826
Before starting the engine, turn the steering wheel..... 792
Beginning emergency stop..... 819
Camera view restricted See Owner's Manual..... 822
Change key batteries..... 764
Charger cable connected..... 780
Check brake fluid level..... 806
Check tyre(s)..... 829
Clean the fuel filter..... 796
Coolant Stop Switch off the vehicle..... 795
Currently unavailable Battery low..... 777
Currently unavailable Charge high-voltage battery..... 778
Currently unavailable High-voltage battery charging incomplete..... 778
Currently unavailable Refuel..... 777
currently unavailable See Owner's Manual (ABS and ESP®)..... 807
currently unavailable See Owner's Manual (ESP®)..... 808

Do not leave persons or animals in the vehicle..... 764
Dynamic low beam inoperative..... 768
Engine oil level cannot be measured..... 837
Engine oil level Reduce oil level.... 836
Engine oil level Stop Switch off the vehicle..... 836
Engine oil pressure Stop Switch off the vehicle..... 837
Fault Drive at max. 80 km/h..... 814
Front left malfunction Consult workshop..... 757
Front left parking lights..... 769
Front left turn signal..... 772
Front right malfunction Consult workshop..... 758
Front right parking lights..... 770
Front right turn signal..... 772
Fuel tank is depressurised Ready for refuelling..... 784
ABS inoperative See Owner's Manual (ABS and ESP®)..... 808
EBD inoperative See Owner's Manual (EBD, ABS and ESP®)..... 810
inoperative See Owner's Manual (ESP®)..... 809
SOS Inoperative..... 824
Key being taught in Please wait.... 766
Key not detected (red display message)..... 765
Key not detected (white display message)..... 765
Left brake lamp..... 773
Left cornering light..... 771
Left daytime running lights..... 771
Left low beam..... 770
Left main beam..... 770
Left mirror turn signal..... 773
Left tail light..... 774
Left window airbag malfunction Consult workshop..... 761
Malfunction See Owner's Manual..... 766
Malfunction Visit workshop..... 783
Malfunction..... 783
Malfunction..... 782
120 km/h Maximum speed exceeded..... 813
Number plate lamp..... 775
Off..... 816
HOLD Off..... 810
Parking brake See Owner's Manual..... 803
Parking brake Switch on vehicle to release..... 806
P Parking lock inoperative Apply the parking brake..... 801
LIM passive..... 812
Performance severely limited..... 784

Please wait 48 V battery charging..... 827
Please wait Depressurising fuel tank..... 784
Pre-entry climate control via key available again after starting vehicle..... 778
Pre-entry climate control via key currently unavailable. High-voltage battery low..... 779
Rear fog light..... 775
Rear left turn signal..... 772
Rear right turn signal..... 773
Rectify tyre pressure..... 830
Reduce speed..... 831
Refill AdBlue See Owner's Manual..... 833
Release parking brake..... 805
Replace air filter..... 797
Replace key..... 764
Reserve fuel..... 797
Restraint system malfunction Consult workshop..... 756
Restricted during trailer operation..... 823
Reversing light..... 775
Right brake lamp..... 774
Right cornering light..... 772
Right daytime running lights..... 771
Right low beam..... 770
Right main beam..... 771
Right mirror turn signal..... 773
Right tail light..... 774
Right window airbag malfunction Consult workshop..... 761
Second row of seats, left Malfunction Consult workshop..... 759
Second row of seats, right Malfunction Consult workshop..... 760
Start the vehicle to charge the 12 V battery..... 826
Steering malfunction Increased physical effort See Owner's Manual..... 791
Steering malfunction See Owner's Manual..... 792
Steering malfunction Stop immediately See Owner's Manual..... 791
Stop Switch off the vehicle..... 783
Stop vehicle Leave vehicle on to charge the 12 V battery..... 826
Stop vehicle See Owner's Manual..... 825
suspended..... 816
Switch off lights..... 767
Switch on headlamps..... 767
Tank ventilation Malfunction Consult workshop..... 785
temporarily unavailable Sensors dirty..... 821

Third brake lamp..... 774
Top up AdBlue Emergency op. in XXX km See Owner's Manual..... 833
Top up AdBlue XX,X l Emerg. op.: max. XXX km/h Start not poss. in XXX km..... 833
Top up coolant See Owner's Manual..... 795
Top up washer fluid..... 794
Top up XX,X l AdBlue Switch vehicle on, wait 60 sec. or engine start not poss..... 834
Towing not permitted See Owner's Manual..... 779
Trailer brake lamp..... 776
Trailer coupling Check lock (white display message)..... 787
Trailer coupling Check lock (red display message)..... 789
Trailer left turn signal..... 775
Trailer right turn signal..... 776
Trailer tail light..... 776
Transmission oil overheated Drive on with care..... 801
Tyre(s) overheated..... 831
Warning tyre malfunction..... 830
Wheel sensor(s) missing..... 829
"Electric" drive program currently unavailable..... 781
4matic currently unavailable..... 794
4matic inoperative..... 794
Active bonnet malfunction See Owner's Manual..... 792
Active Brake Assist Functions currently limited See Owner's Manual..... 817
Active Brake Assist Functions limited See Owner's Manual..... 818
Active Distance Assist available again..... 817
Active Distance Assist currently unavailable See Owner's Manual..... 816
Active Distance Assist inoperative..... 816
Active Lane Keeping Assist currently unavailable See Owner's Manual..... 820
Active Lane Keeping Assist functions restricted See Owner's Manual..... 821
Active Lane Keeping Assist inoperative... 820
Active Parking Assist and PARKTRONIC inoperative See Owner's Manual..... 824
Active Steering Assist currently unavailable due to multiple emergency stops..... 819
Active Steering Assist currently unavailable See Owner's Manual..... 818
Active Steering Assist inoperative..... 818
Adaptive Highbeam Assist currently unavailable See Owner's Manual..... 768
Adaptive Highbeam Assist inoperative.... 768
Adaptive Highbeam Assist Plus currently unavailable See Owner's Manual... 769

Adaptive Highbeam Assist Plus inoperative..... 769
AMG Ride Control Function limited See Owner's Manual..... 814
Anti-theft alarm system Malfunction..... 794
Apply brake and start vehicle to shift out of P or N..... 798
Apply brake to deselect P position..... 798
Apply brake to engage D or R..... 798
Apply brake to engage R..... 798
Apply parking brake to park Visit workshop..... 799
Auxiliary battery malfunction (red display message)..... 802
Auxiliary battery malfunction (white display message)..... 802
Blind Spot Assist currently unavailable See Owner's Manual..... 819
Blind Spot Assist inoperative..... 820
Blind Spot Assist unavailable when towing a trailer See Owner's Manual..... 820
Cannot start vehicle See Owner's Manual..... 786
Charging fault Please change charging method See Owner's Manual..... 781
Charging method currently unavailable Please try again or change charging method..... 781
Check brake pads See Owner's Manual..... 807
Check tyre pressure, then restart Run Flat Indicator..... 832
Consult workshop without changing the transmission position..... 800
Consult workshop without starting the vehicle again..... 783
Cruise control and Limiter inoperative.... 811
Cruise control inoperative..... 811
Cruise control off..... 811
Drive system malfunction Stop Switch off the vehicle..... 797
Drive system Malfunction Visit workshop..... 797
Front passenger airbag disabled See Owner's Manual..... 761
Front passenger airbag enabled See Owner's Manual..... 762
Hazard warning lamp system Malfunction..... 769
Head-up display currently unavailable See Owner's Manual..... 790
Head-up display inoperative..... 790
Inoperative indicator lamp in driver display. Consult workshop..... 776
Limiter inoperative..... 812
N permanently active Risk of vehicle rolling..... 799
Not possible to unlock charging cable See Owner's Manual..... 780

Occupant presence reminder inoperative..... 763
Only electric drive available Power limited..... 781
Only select P when vehicle is stationary..... 798
PARKTRONIC inoperative See Owner's Manual..... 823
Place the key in the marked space See Owner's Manual..... 766
Possible to start the vehicle again..... 827
PRE-SAFE inoperative See Owner's Manual..... 823
RACE START cancelled..... 815
Reduced drive system performance See Owner's Manual..... 782
Reversing not poss. Consult workshop... 800
Risk of vehicle rolling away Apply parking brake to park..... 799
Risk of vehicle rolling away Driver's door open Transmission not in P..... 799
Run Flat Indicator inoperative..... 832
Speed limit (winter tyres) XXX km/h..... 813
Speed Limit Assist currently unavailable See Owner's Manual..... 812
Speed Limit Assist inoperative..... 812
Teaching in transmission complete..... 801
Teaching in transmission Operate selector lever Brake for XX seconds Risk of vehicle rolling..... 801
To switch off the vehicle, press the Start/Stop button for at least 3 seconds or 3 times..... 795
Traffic Sign Assist currently unavailable See Owner's Manual..... 813
Traffic Sign Assist inoperative..... 813
Transmission Malfunction..... 800
Transmission Malfunction Stop..... 800
Transmission Malfunction Visit workshop..... 802
Tyre press. monitor currently unavailable..... 828
Tyre press. monitor inoperative..... 828
Tyre pressure Check tyres..... 832
Tyre pressure monitor inoperative No tyre pressure sensors..... 828
Vehicle is ready to drive Shutdown occurs when locked or automatically in a few minutes..... 787
Vehicle is ready to drive Shutdown occurs when locked or automatically in XX mins..... 787
Vehicle not currently being charged Charging station fault..... 780
Wiper Malfunction..... 794
Without changing gear, consult workshop..... 783
Displaying road names/house numbers..... 480

Distance control ... 318
Distance warning ... 330
DISTRONIC ... 318
Dolby Atmos®
Calling up Dolby Atmos® ... 543
Information ... 543
Door
Additional door lock ... 145
Child safety lock (rear door) ... 137
Emergency key ... 149
Opening (from the inside) ... 146
Unlocking (inside) ... 146
Door control panel
Seat operation ... 72
Drag Race, Drag race ... 443
Drinks holder ... 191
Drive Away Assist ... 368
Drive position ... 261
Drive program display ... 253, 254
Drive programs
AMG DYNAMIC SELECT ... 256
Selecting ... 253, 254
Driver display
Track Pace menu ... 391
Driver's display, Instrument cluster
48 V on-board electrical system ... 395
Assistant display ... 388
Classic menu ... 382, 385
Head-up display ... 393
Instrument cluster ... 66
Menus ... 380
Navigation menu ... 392
Notes ... 379
Operating ... 379
Service due date ... 552
Service menu ... 388
Status displays ... 396, 397
Supersport menu ... 391
Understated menu ... 382, 385
Warning/indicator lamps ... 68, 838
Driver's seat
Adjusting (Seat Comfort) ... 168
Adjusting (without seat comfort) ... 165
Adjusting electrically ... 170
Easy entry and exit feature ... 179
Seat heating ... 177
Driving abroad
Light adjustment low beam ... 31, 199
Driving safety system
ABS (Anti-lock Braking System) ... 305
Active Brake Assist ... 330
Active Steering Assist ... 327
Adaptive brake lights ... 313
ATTENTION ASSIST ... 313
BAS (Brake Assist System) ... 305
Blind Spot Assist ... 343
Cameras ... 303
Cruise control ... 315
EBD (Electronic Brakeforce Distribution) ... 310
ESP® (Electronic Stability Program) ... 305, 306
Hill Start Assist ... 312
HOLD function ... 311
Overview ... 304
Radar and ultrasonic sensors ... 303
Speed Limit Assist ... 335
STEER CONTROL ... 311
Traffic Sign Assist ... 338
Your responsibility ... 302
Driving system ... 304

Driving tips
General driving tips..... 238
Light adjustment when driving abroad 31, 199
Recuperation..... 246
Running-in notes..... 237
Drowsiness detection..... 313
Duplicate key..... 145
Dynamic handling control system..... 305
Dynamic low beam
Activating/deactivating..... 203
Overview..... 202
DYNAMIC SELECT
Calling up the fuel consumption indicator..... 256
Configuring drive program I..... 254
Displaying engine data..... 255
Displaying vehicle data..... 255
Drive program display..... 253, 254
Drive programs..... 251, 252
Function..... 251, 252
Selecting the drive program..... 253, 254

E

E-mails..... 404
E10..... 737, 738
E25..... 737, 738
Easy entry feature
Function..... 179
Setting..... 180
Easy exit feature
Function..... 179
Setting..... 180
EBD, Electronic Brakeforce Distribution..... 310
ECO Assist
48 V on-board electrical system..... 244
Activating/deactivating..... 249
Plug-in hybrid..... 247
ECO display..... 243
ECO start/stop button
Automatic engine start/stop..... 242, 243
ECO start/stop function
Automatic engine start..... 241
Automatic engine stop..... 241
Conditions (automatic engine stop/start)..... 58
Function..... 241
Switching off/on..... 242, 243
Electric drive..... 229
Electric parking brake
Applying automatically..... 297
Emergency braking..... 300
Manually applying/releasing..... 299
Releasing automatically..... 298
Electrical fuses..... 52, 594
Electromagnetic compatibility
Declaration of conformity..... 83
Electronic Stability Program..... 305, 306
Emergency
Emergency guide..... 60
Fire extinguisher..... 48, 574
First-aid kit (soft sided)..... 33, 50, 574
Overview of aids..... 74
Safety vest..... 32, 48, 572
Warning triangle..... 573
Emergency braking
Active Brake Assist..... 330
Brake Assist System..... 305

Carrying out..... 300
Electric parking brake/handbrake..... 297

Emergency call
Automatic..... 524
Manual..... 524

Emergency call system
Mercedes me connect..... 59, 523

Emergency key
Door..... 149
Inserting/removing..... 143

Emergency operation mode
Start the vehicle..... 234

Emergency shutoff (high-voltage on-board electrical system)..... 230

Emergency spare wheel
Inflating..... 614

Emergency stop assistant..... 329

ENERGIZING Coach
Calling up..... 451
Function..... 450

ENERGIZING COMFORT
Overview of programmes..... 448
Starting the programme..... 449

Energy flow display
Function/notes..... 447

Engine
Emergency operation mode..... 234
Engine number..... 734
Starting assistance..... 584
switching off (start/stop button)..... 290
Tow-starting..... 594

Engine data
Displaying..... 255
DYNAMIC SELECT..... 255

Engine electronics..... 616

Engine number..... 734

Engine oil, Oil
Additives..... 742
Capacity..... 743
Capacity (Mercedes-AMG vehicles)..... 744
Checking the oil level using the driver display..... 29, 557
MB-Freigabe or MB-Approval..... 743
MB-Freigabe or MB-Approval (Mercedes-AMG vehicles)..... 744
Quality..... 743
Quality (Mercedes-AMG vehicles)..... 744
Temperature (driver's display)..... 389, 390
Topping up..... 558

Engine oil temperature (driver's display)
..... 389, 390

Engine operating temperature
Warning lamp..... 237

Engine output..... 237

Engine output, current (driver's display)
..... 389, 390

Engine sound..... 249

Engine starting
Remote Online..... 236
Start/stop button..... 232

Engine torque..... 237

Entering characters
Function/notes..... 429
Handwriting recognition..... 432
On the touchscreen..... 430
Selecting the writing speed..... 432
Setting the keyboard language..... 432

Environmentally friendly driving..... 77

ERA-GLONASS test mode..... 526

ESC, Electronic Stability Control..... 305
ESP®
Activating/deactivating..... 309, 310
Adjusting (steering-wheel button)..... 309
Crosswind Assist..... 308
ESP® SPORT..... 306
Function..... 305, 306
Trailer stabilisation..... 308
EU type approval number..... 734
Exhaust gas aftertreatment, diesel engine.... 741
Exit warning
Blind Spot Assist..... 343
Exiting a parking space
Active Parking Assist..... 362
Drive Away Assist..... 368
PARKTRONIC..... 358
Exterior lighting
Care..... 567
Light adjustment when driving abroad
..... 31, 199
Exterior mirrors
Blind Spot Assist..... 343
Warning lamp..... 343

F

Factory settings
MBUX reset function..... 440
Fault message
Driver's display..... 755
Favourites
Adding a destination..... 458
Calling up..... 423
Deleting..... 424
Home address..... 458
Moving..... 424
Overview..... 423
Renaming..... 424
Work address..... 458
Fill level
AdBlue®..... 388
Fire extinguisher..... 48, 574
First aid
First-aid kit (soft sided)..... 33, 50, 574
Fitting
Snow chains..... 43, 598
Tyres/wheels..... 611
Fitting accessories
Limited protection..... 109
Fitting the licence plate (front)..... 83
Flat towing
Pulling/towing..... 378
Flat tyre
MOExtended..... 575
Notes..... 53, 574
TIREFIT kit..... 577
Wheel change..... 608
Flexible charging system Pro..... 280
Floor mats..... 198
Foil covering
On camera/sensors..... 303
Radar and ultrasonic sensors..... 303
Free software..... 97
Frequencies
Mobile phone..... 617
Two-way radio..... 617
Front airbag
Inflating..... 108
Front headlamps..... 199

Front passenger airbag
Disabling/enabling..... 104
Front passenger airbag shutoff
Information (child restraint system on the front passenger seat)..... 120
Front passenger seat
Adjusting (Seat Comfort)..... 168
Adjusting (without seat comfort)..... 165
Adjusting electrically..... 170
Front wheel arch, Wing
Fitting/removing the cover..... 210
Front wheel arch cover
Fitting/removing..... 210
Fuel
Additives..... 739
Depressurising the fuel tank (plug-in hybrid with petrol engine)..... 269
Diesel..... 739
Diesel quality..... 739
E10..... 737, 738
E25..... 737, 738
Fuel reserve (Mercedes-AMG vehicles)... 741
Low outside temperatures..... 739
Petrol..... 737, 738
Petrol quality..... 738
Quality (petrol)..... 737
Refilling..... 22, 266
Reserve..... 740
Sulphur content..... 737, 738
Tank content..... 740
Tank content (Mercedes-AMG vehicles)..... 741
Fuel consumption indicator..... 256
Fuel reserve..... 740
Function in the event of an accident..... 108
Function seat..... 72
Fuses
Boot..... 597
Engine compartment..... 595
Front passenger footwell..... 596
Fuse assignment diagram..... 52, 594
Notes..... 52, 594

G

G-meter, Accelerometer..... 389, 390
Garage door opener
Clearing the memory..... 297
Open/close gate..... 296
Problem..... 295
Garage door openers
Programming buttons..... 292
Synchronising the rolling code..... 294
Gearshift
DIRECT SELECT lever..... 257
Manual..... 262, 263
Gearshift paddles
Steering wheel gearshift paddles.... 262, 263
General driving tips..... 238
Genuine parts..... 78
Glide mode..... 264, 265
Global search
Function..... 427
Overview..... 426
Glove compartment..... 42, 185
Grab handles..... 165
Gross mass..... 734

H

Handbrake..... 297

Handling characteristics
Unusual..... 598
HANDS-FREE ACCESS..... 151
Hands-free system..... 493
Handwriting recognition..... 432
Hazard warning lights..... 48, 202
Hazard warnings
Car-to-X-Communication..... 479
Head restraint
Adjusting (rear)..... 174
Adjusting manually (front)..... 173
Removing/fitting (rear)..... 175
Head-up display
Care..... 568
Function..... 393
Memory function..... 181
Operating..... 394
Switching on/off..... 395
Headlamp flashing..... 201
Headlamp range..... 200
Headlamps..... 199
Heating
Activating/deactivating..... 220
Seat..... 177
Stationary heater..... 46, 226
Help call
Mercedes-Benz emergency call system..... 59, 523
High beam
Illuminants..... 210
High-pressure cleaner..... 564
High-voltage battery
Charge level display..... 290
Charging at time of departure..... 446
Charging cable control panel..... 280
Charging duration..... 750
Charging station, mode 3..... 277
Configuring weekly profile..... 446
Connection types..... 750
Ending the charging process (alternating current, mode 2/3)..... 285
Ending the charging process (direct current, mode 4)..... 288
Energy flow display..... 447
Flexible charging system Pro..... 280
General notes on charging..... 273
Mains socket, mode 2..... 276
Maximum charging current (mains socket)..... 279
Notes..... 583
Range..... 750
Rapid charging station, mode 4..... 278
Recuperation..... 246
Starting the charging process (alternating current, mode 2/3)..... 283
Starting the charging process (direct current, mode 4)..... 287
Stowing the charging cable..... 275
Type..... 750
Voltage types..... 750
Wallbox, mode 3..... 277
High-voltage on-board electrical system
Indicator lamps on vehicle socket..... 281
Manual switch-off..... 230
Operating safety..... 80
Hill Start Assist..... 312
HOLD function
Function..... 311
Switching on/off..... 311

Home screen
Central display..... 411

I

i-Size child restraint system
Fitting..... 133
Suitable seats..... 129
Identification plate
Engine..... 734
Vehicle..... 734
Illuminants
High beam..... 210
Low beam..... 210
Immediate pre-entry climate control..... 225
Immobiliser..... 161
Implied warranty..... 93
Importer information
Regulatory radio information..... 733
In-Car Office
Answering e-mail..... 507
Calling up..... 505
Creating an e-mail..... 507
Forwarding e-mail..... 507
Managing e-mails..... 506
Marking a task as completed..... 506
Selecting functions (calendar entry)..... 506
Selecting functions (Tasks & Calls)..... 506
Incorrect behaviour by vehicle occupants
Limited protection..... 109
Increase in traffic information volume
Setting..... 547
Indicator lamps/warning lamps
Driver's display..... 838
PASSENGER AIR BAG..... 103
Individual drive program
Configuring..... 254
Inside rearview mirror..... 215
Interior lighting
Ambient lighting..... 208
MBUX reading light..... 418
Setting..... 208
Switch-off delay time..... 209
Interior protection..... 163
Intermediate destination
Editing..... 466
Starting the automatic service station search..... 468
Internet
Calling up a web page..... 532
Calling up the web browser settings..... 533
Calling up web browser options..... 533
Deleting a bookmark..... 534
Deleting browser data..... 534
Managing bookmarks..... 534
Mercedes me connect..... 518
Setting up a Wi-Fi hotspot..... 435
Smartphone integration..... 20
Web browser in the background..... 535
Web browsers..... 533
Internet connection
Cancelling permission (mobile phone).... 531
Disconnecting automatically (communication module)..... 529
Displaying the connection status..... 532
Establishing..... 531
Information..... 528
Overview of connection status..... 532
Restrictions..... 528
Setting access data (Bluetooth®)..... 530
Setting up (communication module)..... 529

Setting up (Wi-Fi)..... 530
Setup (Bluetooth®)..... 530

iPhone®
Smartphone integration..... 508

ISOFIX child restraint system
Fitting..... 133
Suitable seats..... 127

J

Jack
Declaration of conformity..... 86
Storage location..... 53, 607

Jump-start connection..... 50, 586

K

Key
acoustic locking verification signal..... 142
Activating/deactivating pre-entry climate control..... 223
Battery..... 144
Deactivating a function..... 59, 142
Emergency key..... 143
Energy consumption..... 59, 142
Function..... 141
Key ring attachment..... 143
Problem..... 145
Replacement key..... 145
Unlocking setting..... 142

KEYLESS-GO
Deactivating..... 59, 142
Locking/unlocking the vehicle..... 146
Problem..... 147
Unlocking setting..... 142

Kickdown..... 264

Knee airbag..... 114

L

Lane Keeping Assist..... 345

Lane recognition
Active Lane Keeping Assist..... 345

Language
Notes..... 436
Setting..... 436

Last destinations
Selecting..... 454

Light adjustment
Driving abroad..... 31, 199

Light switch..... 199

Lighting
Interior lighting..... 208

Lights
Activating/deactivating dynamic low beam..... 203
Active headlamps..... 202
Adaptive brake lights..... 313
Adaptive Highbeam Assist..... 204
Adaptive Highbeam Assist Plus..... 205
Automatic driving lights..... 200
Changing illuminants..... 209
City lighting..... 203
Combination switch..... 201
Cornering light..... 203
Dynamic low beam..... 202
Hazard warning lights..... 48, 202
Headlamp range..... 200
High beam..... 201
Interior lighting..... 208
Light adjustment when driving abroad 31, 199
Locator lighting..... 207
Motorway mode..... 203
Reading lamp..... 208

Rear fog light..... 200
Responsibility for lighting systems..... 199
Switch-off delay time..... 207
Turn signal light..... 201

Limiter
Activating/deactivating..... 316, 321
Buttons..... 316
Calling up a speed..... 316
Function..... 316
Passive mode..... 316
Permanent setting..... 318
Requirements:..... 316
Selecting..... 316
Setting a speed..... 316
Storing a speed..... 316

Live Traffic Information
Displaying the traffic map..... 476
Displaying traffic incidents..... 477
Extending a subscription..... 476
Information from the service provider..... 475
Registering on Mercedes me..... 476

Load capacity
Bicycle rack..... 753

Loading
Notes..... 183
Roof luggage rack..... 35, 190
Stowage space under the boot floor 39, 190
Tie-down eyes..... 41, 189

Loading guidelines..... 183

Loads..... 183

Locator lighting..... 207

Locking/unlocking
Additional door lock..... 145
Automatic locking (MMS)..... 148
Doors (from the inside)..... 146
Emergency key..... 149
KEYLESS-GO..... 146
Mercedes me connect..... 145

Loud sound
PRE-SAFE® Sound..... 106

Low beam
Activating/deactivating..... 199
Illuminants..... 210
Light adjustment when driving abroad 31, 199

Low emission zone
Avoiding/exiting..... 462
Drive program change (plug-in hybrid).... 462

lubricants..... 735

Luggage..... 183

Luggage rack..... 183

Lumbar support..... 173

M

Maintaining safe distance
Active Distance Assist DISTRONIC..... 321

Maintenance..... 552

Maintenance Management
Notes..... 553
Transferred data..... 553

Malfunction
Restraint system..... 101

Manoeuvering brake function..... 369

Manoeuvring
Manoeuvering brake function..... 369

Manoeuvring assistant
Activating/deactivating..... 370

Drive Away Assist..... 368
Manoeuvering brake function..... 369

Manual gearshifting
Activating/deactivating..... 264

Map, Traffic map
Avoiding an area..... 483
Avoiding an area (overview)..... 483
Changing an area..... 483
Deleting an area..... 483
Displaying online map contents..... 486
Displaying Qibla..... 485
Displaying the compass..... 485
Displaying the map version..... 482
Displaying the range..... 486
Displaying the satellite map..... 485
Displaying the traffic map..... 476
Displaying weather information..... 486
Map data..... 484
Moving..... 481
Route overview after start..... 481
Selecting additional information..... 482
Selecting POI symbols..... 481
Setting the map scale..... 481
Setting the map scale automatically..... 485
Updating..... 33, 484

Map functions..... 481

Massage programmes..... 177

Maximum full-stop braking..... 305

Maximum permissible gross vehicle mass..... 734

Maximum speeds..... 749

MBUX
Dashcam..... 490

MBUX Interior Assistant
Favourites..... 418
Lasers and laser classification..... 414
Operating functions by proximity of your hand..... 417
Overview..... 414
Reading light..... 418
Search light..... 418
Selecting settings..... 419
Using the favourites pose..... 418

MBUX multimedia system
Activating/deactivating standby mode... 302
Adjusting the volume..... 428
Authorisations..... 433
Display settings..... 432
Drive programs..... 254
ENERGIZING COMFORT programmes (overview)..... 448
ENERGIZING seat kinetics..... 447
Factory setting..... 440
Global search..... 427
Home screen..... 411
Language settings..... 399
MBUX Interior Assistant..... 414
Mercedes me & Apps..... 21, 520
Overview..... 407, 409
Set collision detection..... 300, 301
Setting keyboard and handwriting recognition..... 432
Setting route-based speed adaptation.... 326
Standby mode function..... 302
Starting the ENERGIZING COMFORT programme..... 449
Switching the sound on/off..... 427
Touchscreen..... 413

MBUX reading light..... 418

MBUX search light..... 418

MBUX Voice Assistant
E-mails..... 404
Function..... 399
Language setting..... 400

Media voice commands..... 403
Online voice commands..... 405
Online voice control..... 402
Operable functions..... 400
Operating safety..... 399
Setting..... 400
Speech quality..... 401
Voice commands..... 402
Voice prompting..... 399

Mecca..... 485

Media
General information..... 19

Media mode
Adding a favourite song..... 541
Connecting Bluetooth® audio equipment..... 540
Connecting USB devices..... 540
Controlling media playback..... 541
Copyright and trademarks..... 537
Information about the search function in categories..... 541
Overview of the media menu..... 539
Playing back similar music tracks..... 541
Removing a favourite song..... 541
Starting a search in categories..... 542
Starting media playback..... 541
Supported formats and data storage media..... 536
Surprise mix..... 541
Using the keyword search..... 542

Medical aids..... 93

Memory function
Head-up display..... 181
Outside mirrors..... 181
Seat..... 181

Menus (driver display)
Track Pace..... 391

Menus (driver's display), Steering-wheel buttons
Assistant display..... 388
Classic menu..... 382, 385
Navigation..... 392
Notes..... 380
Operating..... 381
Service..... 388
Sport..... 389, 390
Supersport..... 391
Understated menu..... 382, 385

Mercedes me App
Activating on-demand features..... 80
Calling up services..... 520
Calling up your user account..... 520
Unlinking the user account..... 521

Mercedes me Apps..... 21, 520

Mercedes me calls
Arranging a service appointment..... 516
Calling the Mercedes-Benz Customer Centre after automatic accident/breakdown detection..... 515
Calls via the overhead control panel..... 514
Consenting to the transfer of data..... 516
Information..... 514
Mercedes-Benz Customer Centre..... 515
Transferred data..... 517

Mercedes me Charge, Paying
Charging station display..... 460

Mercedes me connect
Accident/Breakdown Management..... 519
Information..... 518
Transferred data..... 519

Mercedes-Benz emergency call system
Automatic emergency call..... 524

Data processing..... 526
Data transfer..... 525
ERA-GLONASS test mode..... 526
Information..... 521
Manual emergency call..... 524
Overview..... 59, 523
Self-diagnosis..... 526

Mercedes-Benz GenuineParts..... 78

Mercedes-Benz service centre..... 91

Message memory..... 755

Messages, Short messages
Calling a message sender..... 504
Deleting..... 505
Dictating..... 504
Forwarding..... 504
MBUX voice commands..... 404
Overview..... 503
Read-aloud function..... 504
Reading..... 504
Replying..... 504
Sending..... 504
Setting the displayed text messages..... 503
Using a phone number or URL..... 505

Mirrors
Mirror folding function..... 216
Outside mirrors..... 213
Rear-view mirror..... 215

Mobile phone
Cancelling permission for Internet connection..... 531
Frequencies..... 617
Maximum transmission output..... 617
Notes on wireless charging..... 195
Smartphone integration..... 20
Telephone..... 20

Model type..... 734

Modification
Limited protection..... 109

MOExtended tyres, Run-flat tyres..... 575

Motorway mode..... 203

MULTIBEAM LED
Active headlamps..... 202
Adaptive Highbeam Assist..... 204
Adaptive Highbeam Assist Plus..... 205
City lighting..... 203
Cornering light..... 203
Motorway mode..... 203

Music online
Adding providers..... 542
Calling up..... 543
Calling up the settings..... 543
Requirements:..... 542
Search function..... 543

N

Navigation
Activating..... 451
Destination entry..... 34, 453
Information..... 16
MBUX voice commands..... 403
Menu (driver display)..... 392
Overview..... 452
Updating the map data..... 33, 484

Navigation announcements
Activating/deactivating..... 473
Adjusting the volume..... 473
Repeating..... 473
Switching audio fadeout on/off..... 473

Near Field Communication (NFC)
Connecting a mobile phone to the MBUX multimedia system..... 497
Information..... 434

Switching mobile phones..... 497
Using a mobile phone..... 497

Near-field communication
Activating/deactivating..... 434

Neutral..... 258

NFC..... 434

Notifications Centre
Calling up a notification..... 425
Editing a notification..... 426
Message types..... 424
Overview..... 424
Selecting actions..... 426

O

Objects in the vehicle interior
Limited protection..... 109

Occupant presence reminder
Activating/deactivating..... 140
Function..... 139

Occupant safety
Airbag..... 114
Basic information..... 98
Child seat..... 116
Information on the child restraint system..... 105
Information on the correct seat position... 99
Occupant presence reminder..... 139
Pets in the vehicle..... 109
PRE-SAFE®..... 106

On-board diagnostics interface..... 90

On-board electronics
Engine electronics..... 616
Two-way radios..... 616

On-demand feature..... 79, 80

Online services..... 96

Open Source Software..... 97

Open/close garage door..... 296

Open/close gate..... 296

Opening the boot lid using your foot
HANDS-FREE ACCESS..... 151

Operating fluids
AdBlue®..... 741
Additives..... 739
Brake fluid..... 745
Coolant..... 745
Diesel..... 739
Engine oil..... 742
Fuel (petrol)..... 737
Notes..... 735
Petrol..... 738
Windscreen washer fluid..... 44, 746

Operating safety
48 V on-board electrical system..... 80
High-voltage on-board electrical system... 80

Outside mirrors
Automatic mirror folding function..... 216
Folding in/out..... 213
Memory function..... 181
Parking position..... 215
Setting..... 213

Overhead control panel..... 70

P

Paint code..... 734

Park position
DIRECT SELECT lever..... 257

Parking
Active Parking Assist..... 362
PARKTRONIC..... 358
Prior booking..... 488

Parking Assist
Active Parking Assist..... 362
PARKTRONIC..... 358
Parking Assist PARKTRONIC
Activating/deactivating..... 361
Adjusting warning tones..... 361
Function..... 358
Parking assistance systems
Active Parking Assist..... 362
Drive Away Assist..... 368
Manoeuvering brake function..... 369
PARKTRONIC..... 358
Parking brake..... 297
Parking charges
Paying..... 489
Parking lights..... 199
Parking option
Displaying on the map..... 488
Parking position
Outside mirrors..... 215
Storing the front-passenger outside mirror using the memory button..... 57
Storing the position of the passenger outside mirror using reverse gear..... 216
Parking service
Displaying a parking option on the map.. 488
Paying parking charges..... 489
Prior booking of a parking space..... 488
Selecting parking options..... 487
Parking space
Finding..... 487
Parking up..... 302
PARKTRONIC..... 358
PASSENGER AIR BAG
Status display, front passenger airbag.... 103
Pedestrian protection..... 554
Period out of use
Activating/deactivating standby mode... 302
Permissible axle load..... 734
Permitted towing methods
Overview..... 588, 589
Petrol..... 737, 738
Pets in the vehicle..... 109
PIN protection
System PIN protection..... 436
Plug-in hybrid operation
Charging cable control panel..... 280
Charging the high-voltage battery at a rapid charging station (mode 4)..... 278
Ending the charging process (alternating current, mode 2/3)..... 285
Ending the charging process (direct current, mode 4)..... 288
Function of the recuperative brake system..... 246
Functions of the energy flow display..... 447
Indicator lamps on vehicle socket..... 281
Manually disconnecting the high-voltage on-board electrical system..... 230
Maximum charging current (mains socket)..... 279
Notes on charging (charging station, mode 3)..... 277
Notes on charging (mains socket, mode 2)..... 276
Notes on charging (wallbox, mode 3)..... 277
Notes on plug-in hybrid operation..... 229
Operating safety..... 80
Power meter..... 396
Route-based operating-mode strategy.... 249
Sets recuperation..... 246

Starting the charging process (alternating current, mode 2/3)..... 283
Starting the charging process (direct current, mode 4)..... 287
Stowing the charging cable..... 275

POI
Selecting..... 455

POI symbols
Selecting..... 481

Post-collision brake..... 107

Power supply
Start/stop button..... 231
Switching on (start/stop button)..... 231

Pre-entry climate control
activating/deactivating for departure time..... 225
At departure time..... 224
At time of departure..... 223
immediate..... 225
When vehicle is unlocked..... 223

Pre-entry climate control using the key
Activating/deactivating..... 223
Function..... 222

PRE-SAFE®, Anticipatory occupant protection
Function..... 106
PRE-SAFE® Sound..... 106
Reversing measures..... 107

Preventative occupant protection system..... 106

Programme..... 251, 252

Protection
Limited..... 109

Protection against collision
Manoeuvering brake function..... 369

Protection of the environment
Driving style..... 77
Take-back of end-of-life vehicles..... 77

Pulling away
Hill Start Assist..... 312
Start-off assist..... 313

Q

Qibla..... 485

QR code rescue card..... 50, 94

Qualified specialist workshop..... 91

R

RACE START
Activating..... 349
Activation conditions..... 349
Information..... 349

Racetrack mode
AMG steering-wheel buttons..... 250

Radar and ultrasonic sensors..... 303

Radio
Activating..... 544
Activating/deactivating radio text..... 547
Calling up a slide show..... 546
Calling up the station list..... 545
Deleting stations..... 545
Displaying radio text..... 547
Editing station presets..... 545
Entering a frequency directly..... 35, 545
Frequency fix..... 546
Managing favourites..... 545
MBUX voice commands..... 403
Menu..... 18
Moving stations..... 545
Overview..... 544
Searching for a channel..... 35, 545

Setting a channel..... 545
Setting station tracking..... 546
Setting station tracking (Internet Radio)..... 546
Setting the frequency band..... 545
Setting the traffic information service volume increase..... 547
Showing/hiding lyrics..... 547
Station suggestion..... 545
Storing radio stations..... 545
Switching a slide show off/on..... 546

Radio (audio system)
Switching traffic announcements on/off..... 57, 546

Radio announcements
Activating or deactivating..... 546
Selecting..... 547

Radio regulations
Importer information..... 733
Regulatory radio identification..... 621
Specific absorption rate..... 731
Wireless applications..... 618

Rain closing function
Side windows..... 155
Sliding sunroof..... 159

Rain sensor
Side windows..... 155
Sliding sunroof..... 159
Windscreen wipers..... 211

Range
AdBlue®..... 388

REACH regulation..... 92

Reading lamp
Interior lighting..... 208

Rear door (child safety lock)
Securing..... 137

Rear fog lamp..... 200

Rear fog light..... 200

Rear seat belt
Status display..... 102

Rear window heater..... 217

Rear-view mirror
Automatic anti-glare mode..... 215

Rearward-facing child seat
Information..... 122

Recuperation
Function..... 246
Setting..... 246

Recycling..... 77

Reducing agent
AdBlue®..... 25, 271

Refuelling
Depressurising the fuel tank (plug-in hybrid with petrol engine)..... 269
Fuel..... 22, 266
Refuelling the vehicle..... 22, 266
Topping up AdBlue®..... 25, 271

Registration..... 92

Remote Online
Charging the starter battery..... 235
Cooling/heating the vehicle interior..... 235
Starting the vehicle..... 236

Replacement key..... 145

Replacing a bulb..... 209

Reserve
Fuel..... 740
Fuel (Mercedes-AMG vehicles)..... 741

Resetting
MBUX reset function ... 440
Residual heat ... 222
Responsibility
Driving safety systems ... 302
Restraint system
Basic information ... 98
Basic instructions for children ... 116
Deployment situations ... 108
Functionality ... 101
Information on function ... 108
Information on the correct seat position ... 99
Limited protection ... 109
Malfunction ... 101
Protection ... 99
Self-test ... 101
Warning lamp ... 101
Reverse gear
DIRECT SELECT lever ... 257
Reversing camera
360° Camera ... 350
Function ... 350
Opening the camera cover ... 358
Rocking free ... 262
Roll away protection ... 311
Roller sunblind
Sliding sunroof ... 157
Roof load (Mercedes-AMG vehicles) ... 749
Roof luggage rack
Loading ... 35, 190
Securing ... 35, 190
Route
Accepting a detour recommendation ... 463
Alternative route ... 459, 467
Calculating ... 459
Calculating alternative routes ... 463
Commuter route ... 459, 468
Displaying destination information ... 465
Displaying the route list ... 466
Editing a stored route ... 469
Low emission zone ... 462
Navigation ... 452
Planning ... 466
Range on Map service ... 462
Recording ... 469
Saving a recorded route ... 469
Selecting a type ... 463
Selecting notifications ... 465
Selecting options ... 464
Starting a saved route ... 469
Starting the automatic service station search ... 468
Route guidance
Cancelling ... 474
Changing direction ... 470
Destination reached ... 472
Lane recommendations ... 472
Motorway information ... 472
Notes ... 469
Off-road ... 474
Route guidance with augmented reality
Activating ... 480
Activating/deactivating the traffic light view ... 343
Displaying road names/house numbers ... 480
Overview ... 479
Route-based operating-mode strategy
Function ... 249
Route-based speed adaptation
Function ... 325
Setting ... 326

Run-flat characteristics..... 575
Running-in notes..... 237

S

Safety system..... 304
Safety vest..... 32, 48, 572
Satellite map..... 485
Saving a destination suggestion as a favourite..... 475
Searching for a channel..... 35, 545
Seat, Through-loading feature
Adjusting (Seat Comfort)..... 168
Adjusting (without seat comfort)..... 165
Adjusting electrically..... 170
Automatic adjustment..... 176
Correct driver's seat position..... 164
ENERGIZING seat kinetics..... 447
Folding back the backrest (rear)..... 38, 187
Folding the backrest forwards (rear) 37, 186
Locking the backrest (rear)..... 188
Lumbar support..... 173
Memory function..... 181
Resetting settings (massage programme)..... 177
Settings..... 72
Side airbag..... 114
Seat belt
Activating/deactivating seat belt adjustment..... 107
Automatic tightening..... 107
Care..... 568
Fastening..... 101
Notes on wearing correctly..... 100
Rear seat belt status display..... 102
Releasing..... 113
Warning lamp..... 102
Seat belt adjustment
Activating/deactivating..... 107
Function..... 107
Seat belt tensioners
Inflating..... 108
Seat belt warning..... 102
Seat heating
Activating/deactivating..... 177
Seat kinetics
Setting..... 447
Seat ventilation
Activating/deactivating..... 173
Second telephone
Connecting..... 495
Selecting a gear..... 262, 263
Selecting a sound characteristic (steering-wheel button)..... 249
Selecting the sound profile
Burmester® surround sound system..... 550
Selector lever..... 257
Self-test
Automatic front passenger airbag shut off..... 103
Restraint system..... 101
Sensors
Cleaning..... 567
Information..... 303
Service
Menu (driver's display)..... 388
Service centre..... 91
Service due date..... 552
Service interval display..... 552

Service station search
Starting automatic search..... 468
Setting the date format..... 433
Setting the distance unit..... 436
Settings
Information..... 21
Shifting
Automatic transmission..... 262, 263
Gearshift recommendation..... 264
Manual..... 262, 263
Steering wheel gearshift paddles.... 262, 263
Shortening the braking distance
Brake Assist System..... 305
Shunting support..... 369
Side airbag..... 114
Side window
Close with key..... 156
Convenience closing..... 156
Convenience opening..... 155
Opening with the key..... 155
Side windows
Automatic function..... 155
Child safety lock (rear)..... 138
Opening/closing..... 153
Problem..... 156
Rain closing function..... 155
Skid chains..... 43, 598
Sliding roof
Close with key..... 156
Opening with the key..... 155
Sliding sunroof, Panorama sliding sunroof
Automatic functions..... 159
Opening/closing..... 157
Problem..... 160
Rain closing function..... 159
Smartphone integration
Apple CarPlay®/Android Auto..... 20
Snow chains..... 43, 598
Socket
12 V (boot/load compartment)..... 194
12 V (front centre console)..... 194
Trailer operation..... 374
Socket flap..... 273
SOS button..... 514
Sound
AMG Real Performance Sound..... 249
PRE-SAFE® Sound..... 106
Wheels/tyres..... 598
Sound settings
Adjusting treble, mid-range and bass settings..... 548
Automatic loudness normalisation..... 548
Calling up the sound menu..... 548
Setting the balance and fader..... 548
Spare parts..... 78
Spare wheel..... 613
Specialist workshop..... 91
Specific absorption rate (SAR)..... 731
Speed
Limit, Limiter..... 316
Save, cruise control..... 321
Save, DISTRONIC..... 321
Save, Limiter..... 321
Speed adjustment, route-based..... 325
Speed control
Active Distance Assist DISTRONIC..... 318
Cruise control..... 315
Limiter..... 316

Speed limit
Winter tyres..... 43, 318
Speed Limit Assist
Setting..... 338
System limits..... 335
Standing lights..... 199
Start-off assist
Activating..... 313
Function..... 313
Hill Start Assist..... 312
Start/stop button
Parking the vehicle..... 290
Starting the vehicle..... 232
Switching on the power supply / vehicle..... 231
Start/stop function..... 241
Starter battery
Charging via Remote Online..... 235
Starting assistance..... 50, 586
Starting the engine
Emergency operation mode..... 234
Remote Online..... 236
Start/stop button..... 232
Starting-off aid
Drive Away Assist..... 368
Hill Start Assist..... 312
Start-off assist..... 313
Station
Deleting..... 545
Entering a frequency directly..... 35, 545
Frequency fix..... 546
Managing favourites..... 545
Moving..... 545
Setting..... 545
Storing..... 545
Station list
Calling up..... 545
Station presets
Editing..... 545
Station suggestion
Radio..... 545
Station tracking
Setting..... 546
Setting (Internet Radio)..... 546
Stationary heater/ventilation
Activating/deactivating..... 46, 226
Operating..... 227
Status display
Front passenger airbag..... 103
Rear seat belt..... 102
Steer Assist
Active Steering Assist..... 327
STEER CONTROL..... 311
STEER CONTROL..... 311
Steering wheel
Driver's airbag..... 114
Manually adjusting..... 178
Steering wheel heater..... 179
Steering wheel gearshift paddles..... 262, 263
Steering wheel heater..... 179
Stop/start
ECO start/stop function..... 242, 243
Stopping
Parking the vehicle..... 290
Stowage areas..... 42, 185
Stowage compartment in the glove compartment
Opening..... 185
Stowage space under the boot floor..... 39, 190

Stowage spaces
Armrest (front)..... 42, 185
Centre console (front)..... 42, 185
Door..... 42, 185
Glove compartment..... 42, 185
Streaming online music..... 543
Suggestions
Configuring..... 437
Deleting..... 437
Sulphur content..... 737, 738
Supersport menu display content
Selecting..... 391
Suspension
Adaptive Damping System..... 347
AMG RIDE CONTROL..... 348
Selecting the suspension setting..... 348
SVHC
Substances of very high concern..... 92
Switch-off delay time
Exterior..... 207
Interior..... 209
Switching air-recirculation mode on/off..... 222
Switching loudness normalisation on/off
Advanced sound system..... 551
Burmester® surround sound system..... 549
Synchronisation function
Activating/deactivating (control panel)... 221
System PIN protection
Activating/deactivating..... 436
System settings
Activating/deactivating system PIN protection..... 436
MBUX reset function..... 440
Setting the distance unit..... 436
Setting the time zone..... 432
Setting the time/date format..... 433
Switching near-field communication (NFC) on or off..... 434
Transmission of the vehicle position..... 433

T

Tabs
managing..... 534
Take-back of end-of-life vehicles..... 77
Tank content
AdBlue®..... 742
Fuel..... 740
Fuel (Mercedes-AMG vehicles)..... 741
Reserve..... 740
Reserve (fuel), (Mercedes-AMG vehicles)..... 741
Tank filler cap / flap..... 22, 266
Technical data
Axle load (trailer operation)..... 754
Axle load (trailer operation), (Mercedes-AMG vehicles)..... 754
Fastening points of the trailer hitch..... 752
High-voltage battery..... 750
Information..... 616
Maximum speeds..... 749
Mounting dimensions of a trailer hitch.... 752
Overhang dimension of the trailer hitch.. 752
Radio frequencies..... 617
Radio regulations..... 621
Specific absorption rate (SAR)..... 731
Tongue weight..... 753
Tongue weight (Mercedes-AMG vehicles)..... 754
Towing capacity..... 752
Trailer load (Mercedes-AMG vehicles)..... 753
Vehicle dimensions..... 746

Telediagnosis
Diagnostic data..... 553
Telediagnostics
Transferred data..... 554
Telemetry display..... 444
Telephone, Smartphone
Activating functions during a call..... 499
Calls with several participants..... 500
Changing a function..... 496
Charging wirelessly (mobile phone)..... 196
Connecting a mobile phone..... 10, 495
Connecting a mobile phone (Near Field Communication (NFC))..... 497
Disconnecting a mobile phone..... 497
Emergency call..... 59, 523
Importing contacts..... 502
Importing contacts (overview)..... 501
Incoming call during an existing call..... 500
Information..... 15, 494
Interchanging mobile phones..... 495
MBUX voice commands..... 403
Notes..... 493
Notes on wireless charging (mobile phone)..... 195
Operating modes..... 494
Reception and transmission volume..... 498
Secure Simple Pairing..... 10, 495
Setting the ringtone..... 498
Smartphone integration..... 20
Switching mobile phones (Near Field Communication (NFC))..... 497
Telephone menu overview..... 494
Telephone operation..... 499
Using Near Field Communication (NFC)..... 497
Voice recognition..... 498
Telephone (audio system)
Replacing a mobile phone..... 496
Telephony operating modes
Bluetooth® telephony..... 494
Television, Digital TV
MBUX voice commands..... 403
Temperature
Setting the vehicle interior temperature..... 217
Text messages..... 404
Tie-down eyes..... 41, 189
Time
Manual time setting..... 433
Setting the time zone..... 432
Setting the time/date format..... 433
TIREFIT kit, Tyre inflation compressor
Declaration of conformity..... 87
Storage location..... 54, 576
Tone settings
Information..... 548
Tongue weight..... 753
Tongue weight (Mercedes-AMG vehicles)..... 754
Top Tether..... 134
Torque (driver's display)..... 389, 390
Touch Control
Driver's display..... 379
MBUX..... 412
Setting the sensitivity..... 412
Touch-sensitive controls..... 79
Touchscreen
Entering characters..... 430
Tow bar system
Towing away..... 378

Tow-away protection..... 162
Tow-starting..... 594
Towing
Pulling/towing..... 378
Towing methods..... 588, 589
Towing eye
Storage location..... 593
Towing methods
Both axles on the ground..... 54, 590
Overview..... 588, 589
Track Pace
Menu (driver display)..... 391
Track Race..... 441
Traffic announcements (audio system)
Switching on/off..... 57, 546
Traffic information
Car-to-X-Communication..... 478
Displaying the traffic map..... 476
Displaying traffic incidents..... 477
Extending a Live Traffic Information subscription..... 476
Information on Live Traffic Information... 475
Overview..... 475
Registering Live Traffic Information..... 476
Traffic light view
Activating/deactivating..... 343
Information..... 343
Traffic light warning/display..... 338
Traffic restrictions
Activating/deactivating..... 462
Service..... 462
Traffic Sign Assist
Function..... 338
Setting..... 342
Trailer coupling..... 39, 372
Trailer drawbar, Pulling/towing..... 378
Trailer hitch
Axle load..... 754
Axle load (Mercedes-AMG vehicles)..... 754
Bicycle rack..... 376
Care..... 567
Coupling up/uncoupling a trailer..... 374
Fastening points..... 752
Folding the ball neck out/in..... 39, 372
General notes..... 751
Mounting dimensions..... 752
Overhang dimension..... 752
Socket..... 374
Tongue weight..... 753
Tongue weight (Mercedes-AMG vehicles)..... 754
Towing capacity..... 752
Trailer load (Mercedes-AMG vehicles)..... 753
Trailer operation
Active Lane Keeping Assist..... 345
Axle load..... 754
Bicycle rack..... 376
Coupling up/uncoupling a trailer..... 374
Folding the ball neck out/in..... 39, 372
Making settings..... 376
Notes..... 371
Socket..... 374
Trailer stabilisation..... 308
Transferred vehicle data
Android Auto..... 513
Apple CarPlay®..... 513
Transmission position display..... 257
Transmission positions
DIRECT SELECT lever..... 257
Transporting
Vehicle..... 592

TuneIn
Deleting stations 536
Logging out 536
Overview 535
Registering 536
Saving stations 536
Selecting and connecting a station 536
Selecting stream 536
Setting options 536
Turn signal indicator 201
Turn signal light 201
TV
MBUX voice commands 403
Two-way radios
Frequencies 617
Installation 616
Transmission output 617
Type approval number EG 734
Tyre pressure
Notes 599
TIREFIT kit 577
Tyre pressure loss warning system, function 602
Tyre pressure loss warning system, restarting 603
Tyre pressure table 600
Tyre pressure loss warning system
Function 602
Restarting 603
Tyre pressure monitoring system
Function 601
Restarting 602
Tyre pressure table 600
Tyre sealant 577
Tyre tread 31, 42, 598
Tyre-change tool 53, 607
Tyre-change tool kit 53, 607
Tyres
Breakdown 53, 574
Checking 31, 42, 598
Checking temperature 601
Fitting 611
Interchanging 606
MOExtended 575
Noise 598
Notes on fitting 603
Removing 611
Removing/fitting hub cap 608
Replacing 603, 608
Selection 603
Snow chains 43, 598
Storing 607
TIREFIT kit 577
Tyre pressure loss warning system, function 602
Tyre pressure loss warning system, restarting 603
Tyre pressure table 600
Unusual handling characteristics 598

U

Understated menu display content
Selecting 382, 385
Unfastening 113
Units of measurement
Setting 436
Unlocking setting 142
Updating software, System update, Update
Error message 440

Information..... 438
Performing..... 438

URL
Sharing..... 534

USB port
Rear..... 195
Stowage compartments (front)..... 42, 185

USB port (multimedia system)
Connecting devices..... 540

User profiles, Personalisation
Adding a user..... 420
Notes..... 419
Overview..... 419
Requirements for use..... 419
Selecting a user..... 422
Selecting options..... 421
Synchronising..... 423
User-specific content..... 419

V

Variable limiter..... 316

Vehicle, Switching on the ignition
48 V on-board electrical system..... 80
Activating/deactivating standby mode... 302
Additional door lock..... 145
Correct use..... 92
Data storage..... 94
Diagnostics connection..... 90
Emergency key..... 149
enabling, Remote Online..... 236
High-voltage on-board electrical system... 80
Implied warranty..... 93
Information..... 20
KEYLESS-GO..... 146
lock automatically (MMS)..... 148
Lock/unlock (emergency key)..... 149
Locking/unlocking (from inside)..... 146
Lowering..... 612
Medical aids..... 93
Parking up..... 302
QR code rescue card..... 50, 94
Raising..... 609
REACH regulation..... 92
Registration..... 92
Rocking free..... 262
Set collision detection..... 300, 301
Standby mode function..... 302
Starting (start/stop button)..... 232
starting, emergency operation mode..... 234
Stopping..... 290
SVHC/substances of very high concern... 92
Switching off..... 290
switching off (start/stop button)..... 290
Switching on (start/stop button)..... 231
Towing..... 378
Towing away..... 588, 589
Transporting..... 592
ventilate / comfort opening..... 155
Voice commands for MBUX voice assistant..... 404

Vehicle cameras..... 303

Vehicle data
Display, MBUX..... 255
Displaying, DYNAMIC SELECT..... 255
Maximum speeds..... 749
Roof load (Mercedes-AMG vehicles)..... 749
Transferring to Android Auto..... 513
Transferring to Apple CarPlay®..... 513
Vehicle height..... 746
Vehicle height (Mercedes-AMG vehicles)..... 747
Vehicle length..... 746
Vehicle length (Mercedes-AMG vehicles)..... 747
Vehicle width..... 746

Vehicle width (Mercedes-AMG vehicle)... 747
Weights... 749
Wheelbase... 746
Wheelbase (Mercedes-AMG vehicles)... 747
Vehicle dimensions... 746
Vehicle dimensions (Mercedes-AMG vehicles)... 747
Vehicle emergency start... 594
Vehicle identification plate
Axle load... 734
EU type approval number... 734
Gross mass... 734
Model type... 734
Paint code... 734
VIN... 734
Vehicle interior
Cooling/heating (Remote Online)... 235
Vehicle key... 141
Vehicle location
Switching transmission on/off... 433
Vehicle position
Storing... 474
Vehicle sensors... 303
Vehicle socket
Care... 567
Indicator lamps... 281
Vehicle start
Emergency operation mode... 234
Remote Online... 236
Start/stop button... 232
Vehicle tool kit
TIREFIT kit... 54, 576
Towing eye... 593
Ventilation... 155, 227
Vents
Air vents... 227
VIN, Vehicle identification number
Engine compartment... 734
Identification plate... 734
Windscreen... 734
Vision
Demisting windows... 222
Voice assistant
Voice prompting... 399
Voice recognition... 498

W

Warning system... 161
Warning triangle... 33, 50, 573
Warning/indicator lamp
ABS warning lamp... 851
Active Brake Assist warning lamp... 856
ATTENTION ASSIST warning lamp... 854
Brakes warning lamp (red)... 850
Brakes warning lamp (yellow)... 849
Coolant warning lamp (red)... 845
Coolant warning lamp (yellow)... 846
Electric parking brake indicator lamp (red)... 849
Electric parking brake indicator lamp (yellow)... 849
Electrical fault warning lamp ... 843, 847

Engine diagnostics warning lamp..... 847
Engine operating temperature warning lamp..... 847, 848
ESP® OFF warning lamp..... 853
ESP® warning lamp flashes..... 852
ESP® warning lamp lights up..... 852
Fuel reserve warning lamp lights up..... 848
Mercedes-Benz emergency call system warning lamp..... 857
Occupant presence reminder warning lamp (white)..... 841
Occupant presence reminder warning lamp (yellow)..... 842
Power steering warning lamp (red)..... 844
Power steering warning lamp (yellow)..... 844
Reduced-power warning lamp..... 842
Restraint system warning lamp..... 840
Seat belt warning lamp flashes..... 841
Seat belt warning lamp lights up... 841
Speed Limit Assist warning lamp..... 855
Suspension warning lamp (yellow)..... 856
System error warning lamp..... 842
Traffic Sign Assist warning lamp... 855
Trailer hitch warning lamp..... 843
Tyre pressure monitoring system warning lamp flashes..... 857
Tyre pressure monitoring system warning lamp lights up..... 858
Warning lamp for distance warning..... 855

Warning/indicator lamps
Driver's display..... 838
PASSENGER AIR BAG..... 103

Washer fluid
Topping up..... 27, 44, 561
Windscreen washer fluid..... 44, 746

Washing by hand..... 565

Water tank..... 562

Wear
Limited protection..... 109

Weather information..... 486

Web browser
Calls up options..... 533
Deleting browser data..... 534

Web browsers
Calling up a web page..... 532
Calling up the settings..... 533
Deleting a bookmark..... 534
Managing bookmarks..... 534
Setting in the background..... 535
Sharing URLs..... 534
Tabs..... 534

Weight information..... 734

What3words
Destination entry with a 3 word address..... 456

Wheel change
Fitting a new wheel..... 611
Lowering the vehicle..... 612
Preparation..... 608
Raising the vehicle..... 609
Removing a wheel..... 611
Removing/fitting hub caps..... 608
Wheel rotation..... 606
Wheels
Breakdown..... 53, 574
Care..... 567
Checking..... 31, 42, 598
Checking tyre temperature..... 601
Fitting..... 611
Interchanging..... 606
MOExtended..... 575
Noise..... 598
Notes on fitting..... 603
Removing..... 611
Removing/fitting hub cap..... 608
Replacing..... 603, 608
Selection..... 603
Snow chains..... 43, 598
Storing..... 607
TIREFIT kit..... 577
Tyre pressure..... 599
Tyre pressure monitoring system..... 601
Unusual handling characteristics..... 598
Wi-Fi
Activating/deactivating..... 435
Information on connection..... 434
Setting up a hotspot..... 435
Setting up an Internet connection..... 530
Window airbag..... 114
Windows
Care..... 567
Convenience opening..... 155
Opening with the key..... 155
Opening/closing..... 153
Opening/closing (air recirculation button)..... 56
Removing mist..... 222
Windscreen
Demisting..... 217
Windscreen washer fluid..... 44, 746
Windscreen washer system..... 27, 44, 561
Windscreen wipers
Activating/deactivating..... 211
Replacing the wiper blades..... 29, 46, 212
Replacing the wiper blades (windscreen)..... 29, 46, 212
Winter operation
Snow chains..... 43, 598
Winter tyres
Limiter..... 43, 318
Setting the permanent speed limit.... 43, 318
Wiper blades
Care..... 567
Replacing (windscreen)..... 29, 46, 212
Wipers..... 211
Wireless applications..... 618
Wireless charging
Mobile phone..... 196
Notes..... 195
Workshop..... 91

Publication details

Internet

Further information about Mercedes-Benz vehicles and about Mercedes-Benz AG can be found on the following websites:

https://www.mercedes-benz.com

https://group.mercedes-benz.com

Documentation team

You are welcome to forward any queries or suggestions you may have regarding this Owner's Manual to the technical documentation team at the following address:

Mercedes-Benz AG, HPC: CAC, Customer Service, 70546 Stuttgart, Germany

©Mercedes-Benz AG: Not to be reprinted, translated or otherwise reproduced, in whole or in part, without written permission from Mercedes-Benz AG.

Vehicle manufacturer

Mercedes-Benz AG

Mercedesstraße 120

70372 Stuttgart

Germany

As at 09.02.23

F177 0066 02

Digital – in the vehicle

Discover the Operator's Manual in the multimedia system under "Vehicle". Begin with quick start, discover highlights and useful tips.

Vehicle document wallet

Here you can find comprehensive information about operating your vehicle and about services and guarantees in printed form.

Digital – on the Internet

You can find the Operator's Manual on the Mercedes-Benz homepage.

Digital – as an App

The Mercedes-Benz Guides App is available free-of-charge in familiar App stores.

Apple® iOS

Android™

Order no. F177 0066 02
Edition ÄJ2023-2a