

E-Class Sedan

Operator's Manual +

Mercedes-Benz

F214 0032 13

Front passenger air bag warning



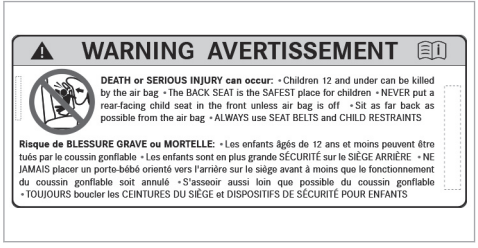

Air bag warning sticker for USA and Canada

WARNING Risk of injury or fatal injuries if the front passenger air bag is enabled

If the front passenger air bag is enabled, a child on the front passenger seat may be struck by the front passenger air bag in the event of an accident.

- NEVER use a rearward-facing child restraint system on a seat with an ENABLED FRONT AIR BAG. This can result in the DEATH of or SERIOUS INJURY to the CHILD.

Observe the chapter "Children in the vehicle".

Welcome to the world of Mercedes-Benz

Before your first drive, please read this Operator's Manual carefully and familiarize yourself with your vehicle. For your own safety and a longer service life of the vehicle, follow the instructions and warning notices in this Operator's Manual. Disregarding them may lead to damage to the vehicle or injury to people.

Damage to the vehicle resulting from the disregard of the instructions is not covered by the Mercedes-Benz Limited warranty.

The standard equipment and product description of your vehicle may vary and depends on the following factors:

- Model
- Order
- National version
- Availability

Your vehicle may therefore differ from that shown in the descriptions and illustrations in individual cases.

Mercedes-Benz reserves the right to introduce changes in the following areas:

- Design
- Equipment
- Technical features

The following documents are components of the vehicle:

- Digital Operator's Manual
- Printed Operator's Manual
- Maintenance Booklet
- Supplementary manuals relating to specific equipment
- Supplementary documents

Keep these documents in the vehicle at all times. Ensure that all documents are in the vehicle or passed on in the event of sale or rental.

Mercedes-Benz USA, LLC

Mercedes-Benz Canada, Inc.

A Mercedes-Benz Group AG Company

Disclaimer

The following online version of the Operator's Manual describes all models as well as all the standard and optional equipment of your vehicle. Country-specific differences in the language variants are possible. Note that your vehicle may not be fitted with all features described. This is also the case for safety-relevant systems and functions.

Please contact your authorized Mercedes-Benz dealer if you would like to have a printed Operator's Manual for other vehicle models and vehicle model years. The online version is the currently valid Operator's Manual. Possible variations to your vehicle may not be taken into account because Mercedes-Benz is constantly updating its vehicles and equipment in line with the current state of the art and introducing changes to the design and equipment.

Please also read the printed Operator's Manual, any supplementary documents and the digital Operator's Manual in the vehicle.

Copyright
All Rights Reserved. All texts, images, graphics, are subject to Copyright and other laws for the protection of intellectual property. They may not be copied for commercial purposes or for transmission, nor changed and used on other websites.

Symbols 6

Quick start and tips 7
Seats 7
Children in the vehicle 8
DIGITAL LIGHT 8
Touch-sensitive controls 9
Radio 10
Wi-Fi hotspot 11
Connecting a mobile phone 11
MBUX Interior Assistant 12
MBUX Voice Assistant 13
ENERGIZING Packages 13
Driving Assistance package 13
Parking Package 14
Destination entry navigation 15
New multimedia system features 16
At the gas station 20
Preparing for a holiday 29
Luggage and loading 33
Ice and snow 40
Help in the event of a breakdown 47
Expert tips 55

At a glance 60
Cockpit (central display) 60
Cockpit (MBUX Hyperscreen) 62
Indicator and warning lamps (standard) 64
Indicator and warning lamps (with driver camera) 68
Overhead control panel 72
Door operating unit and seat adjustment 74
Emergencies and breakdowns 76

Digital Operator's Manual 78
Calling up the Digital Operator's Manual 78

General notes 79
Protecting the environment 79
Mercedes-Benz Genuine Parts 79
Touch-sensitive controls 80
Mercedes me app 81
Service and vehicle operation 82
Operating safety 83
Fitting the license plate to the front license plate holder 85
National information for components relevant to radio regulation 85
Diagnostics connection 86
Qualified specialist workshop 87
Correct use of the vehicle 87
Notes for persons with electronic medical aids 87
Problems with your vehicle 88
Reporting safety defects 88
Limited Warranty 89
QR code for rescue card 89
Data storage 89
Copyright 94

Occupant safety 95
Brief overview of the most important points 95
Information on the automatic functions of the restraint system 102
Purpose and function of the restraint system 105
Seat belts 110
Airbags 110

Children in the vehicle 112
Brief overview of most important points 112

Important safety notes ... 112
Suitable child restraint systems for the transport of children ... 118
Securing the child restraint system ... 118
Child safety locks ... 124
Occupant presence reminder ... 127

Opening and closing ... 128
SmartKey ... 128
Digital Vehicle Key ... 132
Doors ... 137
Trunk ... 144
Side windows ... 150
Sliding sunroof ... 153
Roller sun blinds ... 157
Anti-theft protection ... 158

Seats and stowing ... 162
Notes on the correct driver's seat position ... 162
Notes on grab handles ... 162
Seats ... 163
Steering wheel ... 174
Easy entry and exit feature ... 176
Memory function ... 177
Stowage areas ... 180
Cup holder ... 191
Sockets ... 194
Wireless charging of the mobile phone and connection with the exterior antenna ... 195
Installing and removing floor mats ... 197

Light and visibility ... 199
Exterior lighting ... 199
Interior lighting ... 210
Windshield wiper and windshield washer system ... 213
Mirrors ... 216

Climate control ... 219
Overview of climate control systems ... 219
Operating the climate control system ... 220

Driving and parking ... 233
Driving ... 233
DYNAMIC SELECT ... 248
Automatic transmission ... 251
Function of the 4MATIC ... 257
Refueling ... 257
Parking ... 260
Driving and driving safety systems ... 272
Vehicle towing instructions ... 347

Driver's display ... 348
Notes on the driver display ... 348
Notes on the 3D driver display ... 348
Operating the driver display ... 349
Driver display menus ... 349
Head-up Display ... 356
Vehicles with a 48 V on-board electrical system ... 358
Overview of status displays on the driver display ... 358

MBUX voice assistant ... 360
Notes on operating safety ... 360
Operation ... 360
Using MBUX voice assistant effectively ... 362
Essential voice commands ... 363

MBUX multimedia system **367**
Overview and operation 367
MBUX Interior Assistant 389
Driver camera 394
System settings 396
AMG TRACK PACE 404
Fit & Healthy 409
Navigation and traffic 415
Telephone 453
In-Car Apps 480
Online and Internet functions 480
Media 485
Radio 493
Sound 498
Camera app 501

Maintenance and care **503**
ASSYST PLUS service interval display 503
Maintenance Management 504
Telediagnosis 504
Engine compartment 505
Cleaning and care 512

Breakdown assistance **520**
Emergency 520
Flat tire 522
Battery (vehicle) 528
Tow starting or towing away 534
Electrical fuses 541

Wheels and tires **545**
Notes on noise or unusual handling characteristics 545
Notes on regularly inspecting wheels and tires 545
Notes on snow chains 546
Activating or deactivating snow chain mode 546
Tire pressure 547
Loading the vehicle 553
Tire labeling 557
Definition of terms for tires and loading 562
Changing a wheel 564
Emergency spare wheel 574

Technical data **576**
Notes on technical data 576
Vehicle electronics 576
Radio regulations 578
Vehicle identification plate, VIN and engine number overview 690
Operating fluids 691
Vehicle data 698

Display messages and warning/indicator lamps **700**
Display messages 700
Warning and indicator lamps 778

Index **799**

In this Operator's Manual, you will find the following symbols:

WARNING Danger due to failure to observe the warning notices

Warning notices draw your attention to hazards that may endanger your health or life, or the health or life of others.

▶ Observe the warning notices.

ENVIRONMENTAL NOTE Environmental damage due to failure to observe environmental notes

Environmental notes include information on environmentally responsible behavior or environmentally responsible disposal.

▶ Observe environmental notes.

NOTE Damage to property due to failure to observe notes on material damage

Notes on material damage inform you of risks which may lead to your vehicle being damaged.

▶ Observe notes on material damage.

ⓘ These symbols indicate useful instructions or further information that could be helpful to you.

▶ Instruction

(⟶ page) Further information on a topic

Display Display in the central display

Highest menu level, which is to be selected in the multimedia system

Relevant submenus, which are to be selected in the multimedia system

* Indicates a cause

Seats

Adjusting the seats

Adjusting the seats manually and electrically

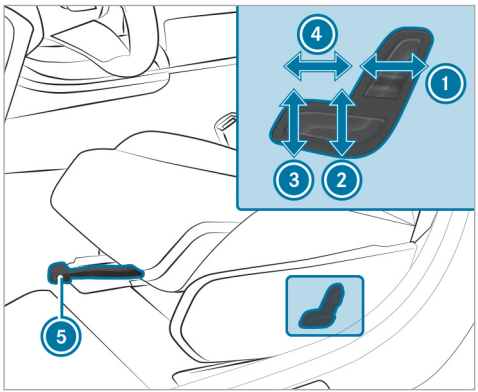

1. Seat backrest inclination
2. Seat height
3. Seat cushion inclination
4. Seat cushion length
5. Seat fore-and-aft position

- **To adjust the seat fore-and-aft position:** lift lever 5 and slide the seat into the desired position.
- Make sure that the seat is engaged.

Adjusting the seats electrically using the door operating unit

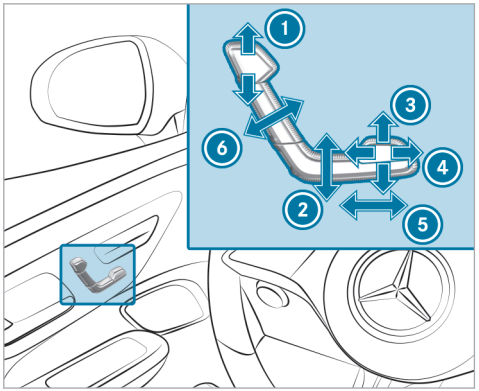

1. Head restraint height
2. Seat height
3. Seat cushion inclination
4. Seat cushion length
5. Seat fore-and-aft position
6. Seat backrest inclination

- Save the settings with the memory function (→ page 178).

Children in the vehicle

Safely transporting children in the vehicle

- Always observe when children are traveling in the vehicle (→ page 112)
- Important warning notices (→ page 114)
- Suitable vehicle seats for installing a child restraint system (→ page 112)
- Activating/deactivating the seat belt's special seat belt retractor (→ page 120)
- Installing an ISOFIX child restraint system on the rear seat (→ page 121)
- Attaching Top Tether belt (→ page 122)
- Securing the child restraint system with the seat belt (→ page 123)
  - Notes on rearward-facing and forward-facing child restraint systems on the front passenger seat (→ page 116)
- Automatic front passenger air bag shutoff (→ page 116)
- Child safety locks for the rear side windows (→ page 125)
- Child safety locks for the rear doors (→ page 124)

DIGITAL LIGHT

Adaptive functions of the DIGITAL LIGHT

With this system, the headlamps adapt to the driving and weather situation. It also provides extended functions for improved illumination of the road.

The system comprises the following adaptive functions:

- Active headlamps (→ page 202)
- Cornering light (→ page 202)
- Highway mode (→ page 203)
- Enhanced fog light function (→ page 203)
- Bad weather light (→ page 203)
- City lighting (→ page 203)
- Topographical compensation (→ page 203)

To activate or deactivate DIGITAL LIGHT:

- Briefly press [⌂] on the multimedia system display.
- Select Settings.
- Select Light.
- Select DIGITAL LIGHT.
- Activate or deactivate Dynamic Low Beam.

To activate or deactivate enhanced assistance functions:

- Select Settings.
- Select Light.
- Select Supporting Projections.
- Activate or deactivate the desired projection.

The availability of the assistance functions is dependent on the country.

Touch-sensitive controls

Overview of touch-sensitive controls

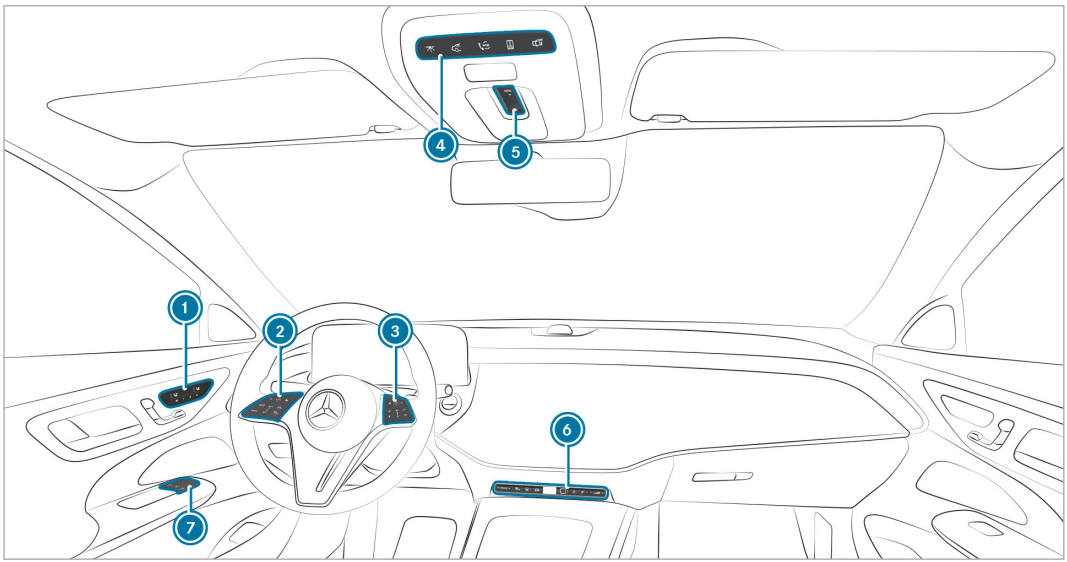

F214 0032 13

1 Control panel:
- Switches the seat heating on/off
- Switches the seat ventilation on/off
- M Operates the memory function

2 Control panel:
Driver's display
- Active Distance Assist DISTRONIC

3 Control panel for the MBUX multimedia system

4 Control panel:
- Switches the front interior lighting on/off
- Switches the rear interior lighting on/off
- me button
- Opens/closes the panoramic sliding sunroof rear roller sunblind
- Switches automatic interior lighting control on/off

5 Opens/closes the panoramic sliding sunroof
- Opens/closes the panoramic sliding sunroof front roller sunblind

6 Control panel:
- DYNAMIC SELECT
- Active Parking Assist
- Quick vehicle access
- Fingerprint sensor
- Switches the MBUX multimedia system on/off
- Switches sound on/off
- Adjusts the volume

7 Operates the outside mirrors

▶ Observe the notes on the touch-sensitive controls (→ page 80).

Radio

Operating radio

▶ **To switch to radio:**
- Briefly press on the multimedia system display.
- Tap on .

▶ **To set the frequency band:**
- Briefly press on the multimedia system display.
- Tap on .
- Select a frequency band or a favorite.

▶ **To set a radio station:**
- Briefly press on the multimedia system display.
- Tap on .
- Swipe to the left or right on the control element or select a radio station.

▶ **To call up the radio station list:**
- Briefly press on the multimedia system display.
- Tap on .
- Select .

▶ **To search for radio stations using station names or frequency entry:**
- Briefly press on the multimedia system display.
- Tap on .
- Select .
- Enter a station name or frequency.

- Select a station.

▶ **To store radio stations:**
- Briefly press [⌂] on the multimedia system display.
- Tap on [♪].
- Select [☆].

▶ **To set the traffic information service volume increase:**
- Briefly press [⌂] on the multimedia system display.
- Tap on [⚙].
- Select System.
- Select Audio.
- Select Navigation and Traffic Announcements.
- Set a value for Increase Volume for Traffic Announcement.

Wi-Fi hotspot

Setting up a Wi-Fi hotspot

Generally, two types of Wi-Fi connection are available:

- Using the multimedia system as a Wi-Fi hotspot

  The multimedia system serves as a Wi-Fi hotspot for mobile communication devices such as a smartphone or tablet PC.

  The data volume of the vehicle or an already connected tethering device is used for the data connection.

  Data volumes must be purchased via the Mercedes me Portal.

  The use of the vehicle data tariff by external devices is not available in all countries.
- Using a mobile communication device as a Wi-Fi hotspot (tethering)

  An external Wi-Fi hotspot is accessed for the Internet connection of the multimedia system.

  The data tariff of the mobile communication device via Purchased Plan is used for the data connection.

Options for setting up a connection:

- QR code

  The connection is set up by scanning the QR code shown on the multimedia system.
- Security key

  The connection is established by entering the security key displayed on the multimedia system.

Connecting a mobile phone

Connecting a mobile phone

▶ **To activate Bluetooth®:**
- Make sure that the mobile phone Bluetooth® is switched on.
- Press [⌂] in the central display.
- Select Settings.
- Select System.
- Select Internet and Bluetooth.

- Activate Bluetooth®.

▶ **To search for a mobile phone:**

- Press ⌂ in the central display.
- Select Phone.
- Select ⚙.
- Select Devices.
- Select Devices.
- Select Connect New Device.

▶ **To authorize a mobile phone:**

- Select a mobile phone.

A code is displayed in the multimedia system and on the mobile phone.

▶ If the codes match, confirm the code on the mobile phone.

MBUX Interior Assistant

Using the MBUX Interior Assistant

The MBUX Interior Assistant detects the front vehicle occupants via 3D laser cameras in the overhead control panel. The Assistant interprets natural hand, head and body movements contextually or upon the explicit request of the driver or front passenger. The Assistant can thus automatically trigger vehicle interior functions and assist appropriately to the situation.

The Assistant recognizes driver and front passenger interactions.

The Assistant supports vehicle and infotainment functions at three interaction levels:

- INTELLIGENT

  The Assistant recognizes vehicle occupants and objects automatically and activates functions.
- REACTIVE

  The Assistant recognizes the natural body language of a vehicle occupant and carries out functions automatically, appropriate to the situation.
- CONTACTLESS

  The vehicle occupant actively requests a function using a hand movement.

The Assistant offers functions for the following:

- SAFETY

  The Assistant supports vehicle occupants with the use of restraint systems.
- COMFORT

  The Assistant enhances comfort by automating functions inside the vehicle and supporting natural interaction with the vehicle.
- INFOTAINMENT

  The Assistant facilitates operation of the Infotainment functions.

One application example is switching the reading light on or off.



Carrying out operation of the reading light for the driver and front passenger

▶ Move your hand up and down under the inside rearview mirror.
The reading light is switched on or off.

MBUX Voice Assistant

Operating the MBUX Voice Assistant

You can use the MBUX Voice Assistant to operate the following functions depending on the vehicle equipment:

- Telephone
- Text messages and e-mails
- Navigation
- Radio and media
- Vehicle functions
- Online functions

Examples of possible voice commands:

- To operate the phone: Call my father.
- To manage e-mails: Show me my new e-mails.
- To operate the navigation: Search for an Asian restaurant, but not Japanese, in South London.
- To operate the radio: Which station am I currently listening to?
- To operate media: Play a similar track.
- To operate climate control: My feet are cold.
- To operate vehicle functions: Open the window.
- To call up the weather: Will it be sunny tomorrow?
- To ask a general knowledge question: Who painted the picture "The Scream"?

ENERGIZING Packages

Operating ENERGIZING COMFORT

▶ To start an ENERGIZING program:
- Briefly press [⌂] in the multimedia system display.
- Select Comfort.
- Select ENERGIZING COMFORT.
- Select a program and start with [▶].

▶ To configure an ENERGIZING program:
- Select a program.
- Select Settings.
- Switch the functions included in the program on or off.

▶ To start a training program:
- Select Training.
- Select a program and start with [▶].
- To activate fragrancing for training, select Fragrance.

▶ To start tips:
- Select Tips.
- Select an area of the body and start with [▶].

Driving Assistance package

Functions of the Driving Assistance Package

The Driving Assistance Package contains various functions that assist you when driving. For this purpose, your vehicle uses cameras and radar sensors to monitor the area in front of, behind or next to the vehicle.

The following functions are included in the Driving Assistance Package, depending on country-specific availability:

- Active Distance Assist DISTRONIC (→ page 284)

You can watch an animation on this topic via the following link:

- Active Speed Limit Assist (country-dependent) (→ page 290)

You can watch an animation on this topic via the following link:

- Route-based speed adaptation (country-dependent) (→ page 290)
- Active Brake Assist (→ page 300)

You can watch an animation on this topic via the following link:

- Active Steering Assist (country-dependent) (→ page 293)

You can watch an animation on this topic via the following link:

- Active Emergency Stop Assist (country-dependent) (→ page 295)
- Active Lane Change Assist (country-dependent) (→ page 296)
- Active Stop-and-Go Assist (country-dependent) (→ page 292)
- Active Blind Spot Assist with exit warning (→ page 311)

You can watch an animation on this topic via the following link:

- Active Lane Keeping Assist (→ page 314)

Parking Package

Functions of the Parking Package

Depending on country-specific availability, your vehicle may be equipped with various functions to assist you with parking and maneuvering. For this purpose, your vehicle uses cameras and ultrasonic sensors to monitor its surroundings.

Depending on the equipment level, the following systems and functions are part of your Parking Package:

- **Rear view camera:** monitors the area behind the vehicle and shows this on the driver's display (→ page 319).
- **360° camera:** a system that consists of four cameras which cover the immediate surroundings of the vehicle and display this on the driver's display (→ page 321).
- **Parking Assist PARKTRONIC:** an electronic parking assistance system which monitors the area surrounding your vehicle and the distance to obstacles in the vicinity using ultrasound (→ page 325).
- **Active Parking Assist:** an electronic parking assistance system which assists you when parking or leaving a parking space by changing gear, accelerating, braking and steering the vehicle (→ page 329).

You can watch an animation on this topic via the following link:

- **Remote Parking Assist:** can park your vehicle and leave a parking space while you are outside of your vehicle (→ page 335).

You can watch an animation on this topic via the following link:

- **Memory Parking Assist:** can park your vehicle in and leave a previously recorded and stored parking space (→ page 343).

You can watch an animation on this topic via the following link:

Destination entry navigation

Entering a navigation destination

- Briefly press [⌂] on the multimedia system display.
  The zero layer is shown.
- Select [🔍].

Select the following options for destination entry:

- Enter a POI, an address or a three-word address in the input line.

  Online search results for POIs (if available) may contain additional information, for example opening times and prices. The information is provided by an online map service.

  You can find further information about 3 word addresses at: http://+what3words.com
- Select a destination suggestion.

  Requirements:

  The Navigation option is switched on in the user settings for Suggestions.

  The multimedia system has gathered sufficient data in order to show destination suggestions.
- Select Previous Destinations.

  Select a previous destination.

  You can save the destination as a favorite .
- Select POIs.

  Select a POI category, e.g. [P] or enter a POI name or POI category in the input line.

  If search results are displayed, limit them with Filter, for example by search position or the desired travel time.
- Select Contacts.

  Requirements:

  A mobile phone is connected to the multimedia system and contacts have been downloaded.

  The contact contains a navigable address.
- Enter the geocoordinates as latitude and longitude in the input line.

  Example 1: 47°58'11"N 7°57'25"E (degrees, minutes, seconds and compass direction)

  Example 2: 47.969722 7.956944 (decimal degrees)
- Select a destination on the map.
- Select Favorites.

  Requirements:

  The destinations have been saved as favorites.
- Select Received Destinations.

  Requirements:

  There is an Internet connection for receiving external destinations.

  The destinations have been sent to the vehicle.

New multimedia system features

Information about the telephone menu



1. Bluetooth® device name of the currently connected mobile phone/of the mobile phone
2. Bluetooth® device name of the currently connected mobile phone/of the mobile phone (two phone mode)
3. Signal strength of the mobile phone network
4. Battery status of the connected mobile phone
5. Options
6. Messages
7. Calls up my devices
8. Numerical pad
9. Starts contact search

Telephone menu overview

Via the telephone menu you can use the functions in connection with your mobile phone.

The following functions can be used:

- Call lists
- Contacts
- Messages
- Device manager

Using call lists

If your mobile phone supports the PBAP Bluetooth® profile, the call lists from the mobile phone are displayed in the multimedia system.

The following functions are available:

- Making calls from the call list
- Opening contacts on the call list

Messages

In the message menu you can receive text messages and create and send them with the help of the MBUX voice assistant. In addition, you can conveniently use the read-aloud function during the journey.

Device manager

In the device manager, you can connect your mobile phone with the multimedia system.

You have the option of using your mobile phone alone in single telephone mode or together with another mobile phone in two phone mode.

Using contacts

If you permit the multimedia system to access the contacts in your mobile phone, you can use these in the vehicle. You can store up to 8,000 contacts.

The following options are available to you via the contacts menu:

- Making telephone calls (calling a contact)
- Navigation
- Composing messages with the help of the MBUX voice assistant

- Additional options

The contacts from your mobile phone can be downloaded automatically or manually.

Conducting a call

When conducting a call, additional functions are available apart from making, accepting or rejecting a call. For example, you can switch between calls, conduct a call with several participants or conference calls.

It is also possible to accept or reject waiting calls. If you receive a call while already in a call, a message is displayed.

During a call you can activate the following functions:

- Microphone off
- Fade in the numerical pad to send DTMF tones
- Add a call
- Hands-free mode to transfer the call to the front or rear passenger compartment
- Privacy mode to transfer the call to the telephone or headphones

Information on radio



1. Station logo
2. Active frequency band
3. Station name or set frequency
4. Settings
5. Mutes volume
6. Switches HD Radio® on/off
7. Station list
8. Search

Using the radio menu you can play a multitude of radio stations and use the Internet Radio TuneIn. Search for your preferred stations and save these as favorites or in station lists.

ⓘ The function of TuneIn Internet radio is country-dependent.

Radio text: this function shows you the station name, the track and the artist for the song currently playing, for example.

Information on media

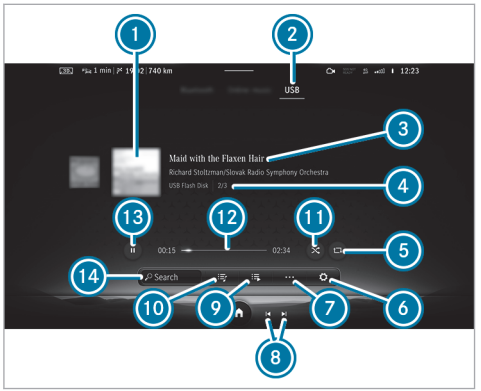

1. Album cover
2. Active media source
3. Track and artist
4. Active data storage medium and current track number/track in playback list
5. Repeat
6. Settings
7. Additional options
8. Previous or next track and fast rewind or fast forward
9. Additional categories
10. Playlists and categories
11. Random playback
12. Timeline
13. Controls playback
14. Media search

Using the Media application you can set and use the audio functions of your multimedia system, for example. You can listen to music, for example.

USB: using the USB menu, you can play back your own audio data from a data storage medium connected by USB, for example.

Bluetooth®: using the Bluetooth menu, you can connect Bluetooth® audio equipment with the multimedia system and play back the available tracks on the audio equipment. Connecting the device can be conveniently handled in the device manager, so you can complete all settings with just a few clicks.

Online music: the Online Music menu allows you to access music streaming services.

Notes on comfort

The Comfort menu makes those functions available that contribute to your well-being when driving or taking a break.

Seat Comfort

The Seat menu allows you to flexibly adjust the contours of the seats to your needs by adjusting the side bolsters and lumbar support independently. You can save these settings in your Mercedes me profile, so they can be called up each time you drive. With the Seat Kinetics function, you can start a program that causes slight modifications of the seat position when you are driving. These modifications promote a healthy back.

Massage

In the Massage menu you will find the massage programs that are available for your vehicle. By selecting the desired program you start it directly and it runs for a period of approximately ten

minutes, depending on the program selected. With the Intensive function you can increase the effect of the massage.

Ambient light

In the Ambient Light menu you can set the color and brightness for your ambient lighting. Using the Link Zones function, the ambience, accent and impression zones can be regulated separately so that you can set the lighting of your vehicle individually.

Information about smartphone integration

Using the Smartphone Integration menu, various applications are available that can bring the functions of your mobile phone to the multimedia system display. Operation can by carried out via the touchscreen or voice control, for example.

Only one mobile phone at a time can be connected via Smartphone Integration to the multimedia system. Also for use with two phone mode with Smartphone Integration, only one additional mobile phone can be connected using Bluetooth® with the multimedia system.

Use Android Auto for mobile phones with the Android operating system and use Apple CarPlay® with your iPhone®. The full functionality of Android Auto and Apple CarPlay® is only possible with an Internet connection.

Information about vehicle info

You can have important vehicle information displayed in the Info menu. At a glance you will have an overview of vehicle and engine data or current consumption values, for example. In addition, you can call up the Digital Operator's Manual via the Operator's Manual menu item.

Vehicle data

The following data will be shown, for example:

- Activity of the acceleration and brake pedal
- Activity of the suspension strut
- Wheel angle
- G-force display for the linear and lateral acceleration

Engine data

The following data is shown:

- Transmission oil temperature
- Engine/coolant temperature
- Performance
- Torque
- Boost pressure

Consumption data

Depending on your driving style, this display shows the current and average fuel consumption. Together with the displays of vehicle and engine data, you can adapt your driving style to be as efficient and economical as possible.

Information about Mercedes me Apps

Using the Mercedes me Apps menu, various services and online functions are available to you:

- Managing Mercedes me services
- Using the dashcam
- Using the web browser to surf the Internet

You require a user account, and have to connect your vehicle with the user account, in order to be able to use services.

ⓘ If the Mercedes me App is available on a mobile phone, the vehicle connection can be accomplished using the QR code shown.

Please not that the available features are country-dependent.

Information on settings

In the Settings you can set the basic configuration for your multimedia system and the vehicle. You have access to all functions in this menu, from switching the driver assistance systems on and off to display and language settings.

The settings are structured in the following menus:

- Assistance
- Vehicle
- Light
- System

Assistance menu

With the Assistance menu you have direct access to the driver assistance systems which are used in your vehicle and can either switch these on or off, or configure according to your wishes.

Vehicle menu

Here you can activate the following functions, for example:

- Automatic folding in of the outside mirrors when parking the vehicle
- Automatic adjustment of the seat and steering wheel, for comfortable entry and exit from the vehicle
- Automatic activation of the 360° camera when selecting reverse gear

Light menu

All the light settings can be made in the Light menu. You can activate or deactivate the Intelligent Light System here, set for how long your vehicle should remain lit after parking or unlocking or switch the function off.

System menu

All important settings for the multimedia system can be made in the System menu.

You can carry out the following settings, for example:

- Setting the system language
- The configuration of Wi-Fi and Bluetooth®
- Setting of time and date

At the gas station

Refueling the vehicle

⚠ **WARNING** Risk of fire or explosion from fuel

Fuels are highly flammable.

- ▶ Fire, open flames, smoking and creating sparks must be avoided.
- ▶ Before refueling, switch off the vehicle and, if installed, the stationary heater, and leave them switched off during refueling.

⚠ WARNING Risk of injury from fuels

Fuels are poisonous and hazardous to your health.

- ▶ Do not swallow fuel or let it come into contact with skin, eyes or clothing.
- ▶ Do not inhale fuel vapor.
- ▶ Keep children away from fuel.
- ▶ Keep doors and windows closed during the refueling process.

If you or other people come into contact with fuel, observe the following:

- ▶ Immediately rinse fuel off your skin with soap and water.
- ▶ If fuel comes into contact with your eyes, immediately rinse them thoroughly with clean water. Seek medical attention immediately.
- ▶ If you swallow fuel, seek medical attention immediately. Do not induce vomiting.
- ▶ Change immediately out of clothing that has come into contact with fuel.

⚠ WARNING Risk of fire and explosion due to electrostatic charge

Electrostatic charge can ignite fuel vapor.

- ▶ Before you open the fuel filler cap or take hold of the pump nozzle, touch the metallic vehicle body.
- ▶ To avoid creating another electrostatic charge, do not get into the vehicle again during the refueling process.

! NOTE Damage caused by the wrong fuel

Vehicles with a gasoline engine:

Even small amounts of the wrong fuel could result in damage to the fuel system, the engine and the emission control system.

- ▶ Refuel only with low-sulfur spark-ignition engine fuel.

This fuel may contain up to 10% ethanol. Your vehicle is suitable for use with E10 fuel.

Never refuel with one of the following fuels:

- Diesel
- Gasoline with more than 10% ethanol by volume, e. g. E15, E85, E100
- Gasoline with more than 3% methanol by volume, e.g. M15, M30, M85, M100
- Gasoline with metallic additives

If you have accidentally refueled with the wrong fuel:

- ▶ Do not switch on the vehicle.
- ▶ Consult a qualified specialist workshop.

! NOTE Do not use diesel to refuel vehicles with a gasoline engine

If you have accidentally refueled with the wrong fuel:

- Do not switch on the vehicle. Otherwise fuel can enter the engine.

Even small amounts of the wrong fuel could result in damage to the fuel system and the engine. The repair costs are high.

- ▶ Consult a qualified specialist workshop.
- ▶ Have the fuel tank and fuel lines drained completely.

! **NOTE** Damage to the fuel system due to overfilling the fuel tank

- ▶ Only fill the fuel tank until the pump nozzle switches off.

If too much fuel has been added due, for example, to a faulty filling pump:

- ▶ Do not switch on the vehicle.
- ▶ Consult a qualified specialist workshop.

! **NOTE** Fuel may spray out when you remove the fuel pump nozzle

- ▶ Only fill the fuel tank until the pump nozzle switches off.

Requirements

- The vehicle is unlocked.

Observe the notes on operating fluids and fuel.

Only refuel with fuel that has at least the octane number specified on the information label in the fuel filler flap. Otherwise, engine output may be reduced and fuel consumption may increase.

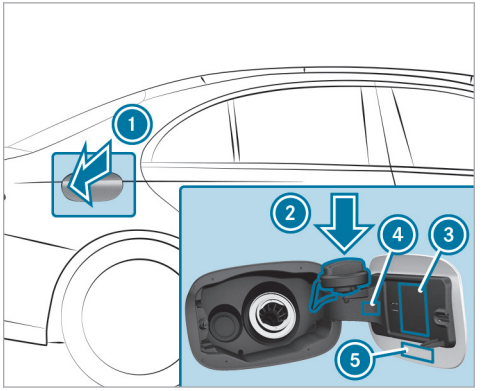

1. Fuel filler flap
2. Holder for fuel filler cap
3. Tire pressure table
4. QR code for rescue card
5. Fuel type

- ▶ Press on the center rear area of fuel filler flap 1.

- Turn the fuel filler cap counter-clockwise and remove it.
- Insert fuel filler cap from above into holder (2).
- Fully insert the pump nozzle into the tank filler neck, hook in place and refuel.
- Only fill the fuel tank until the pump nozzle switches off.
- Replace the cap for the tank and turn it clockwise until it engages audibly.
- Close fuel filler flap (1).

Checking the tire pressure manually

- Read the tire pressure recommended for the current operating conditions from the tire and loading information placard or the tire pressure table. Observe the notes on tire pressure.
- Remove the valve cap of the tire to be checked.
- Press the tire pressure gauge securely onto the valve.
- Read the tire pressure.
- If the tire pressure is lower than the recommended value, increase the tire pressure to the recommended value.
- If the tire pressure is higher than the recommended value, release air. To do so, press down the metal pin in the valve, e.g. using the tip of a pen. Then check the tire pressure again using the tire pressure gauge.
- Screw the valve cap onto the valve.

Refilling the windshield washer system

WARNING Risk of burns when opening the hood

If you open the hood in the event of an overheated engine or fire in the engine compartment, the following situations may occur:

- You may come into contact with hot gases.
- You may come into contact with other escaping hot operating fluids.

- Before opening the hood, allow the engine to cool down.
- In the event of a fire in the engine compartment, keep the hood closed and call the fire service.

WARNING Risk of injury due to moving parts

Components in the engine compartment may continue to run or start unexpectedly even when the drive system is switched off.

Observe the following if you must open the hood:

- Switch off the vehicle.
- Never touch the danger zones surrounding moving components, e.g. the rotation area of the fan.
- Remove jewelery and watches.
- Keep items of clothing and hair away from moving parts.

WARNING Risk of burns from hot component parts in the engine compartment

Certain component parts in the engine compartment can be very hot, e.g. the engine, the cooler and parts of the exhaust system.

- Allow the engine to cool down and only touch component parts described in the following.

WARNING - Risk of fire and injury from windshield washer concentrate

Windshield washer concentrate is highly flammable. It could ignite if it comes into contact with hot engine component parts or the exhaust system.

- Make sure that no windshield washer concentrate spills out next to the filler opening.

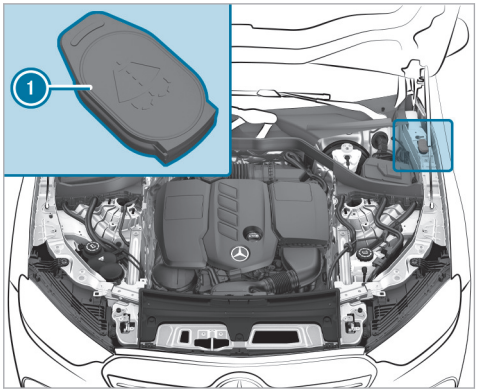

- Open cap (1) by the tab.
- Add washer fluid.

Changing the windshield wiper blades

WARNING Risk of becoming trapped if the windshield wipers are switched on while wiper blades are being replaced

If the windshield wipers begin to move while you are changing the wiper blades, you can be trapped by the wiper arm.

- Always switch off the windshield wipers and vehicle before changing the wiper blades.

Moving the wiper arms into the replacement position

- Switch the vehicle on and then off again immediately.
- Within around 15 seconds, press the button on the combination switch for approximately three seconds (→ page 213). The wiper arms will move into the replacement position.

ⓘ Depending on the production period of the vehicle, different variants of the wiper blades will have been installed.

F214 0032 13

Removing the wiper blades (variant 1)

- Fold the wiper arms away from the windshield.

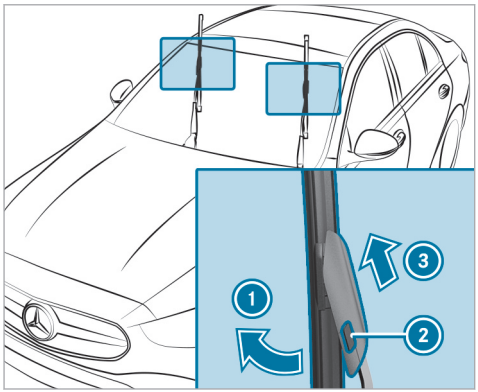

- Hold the wiper arm with one hand. With the other hand, turn the wiper blade away from the wiper arm in the direction of arrow 1 as far as it will go.
- Press release knob 2.
- Remove the wiper blade in the direction of arrow 3 away from the wiper arm.

Removing the wiper blades (variant 2)

- Fold the wiper arms away from the windshield.

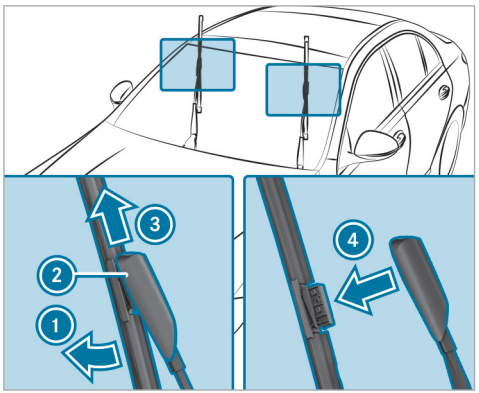

- Hold the wiper arm with one hand. With the other hand, turn the wiper blade away from the wiper arm in the direction of arrow 1 as far as it will go.
- Slide catch 2 in the direction of arrow 3 until it engages in the removal position.
- Remove the wiper blade from the wiper arm in the direction of arrow 4.

Installing the wiper blades (variant 1)

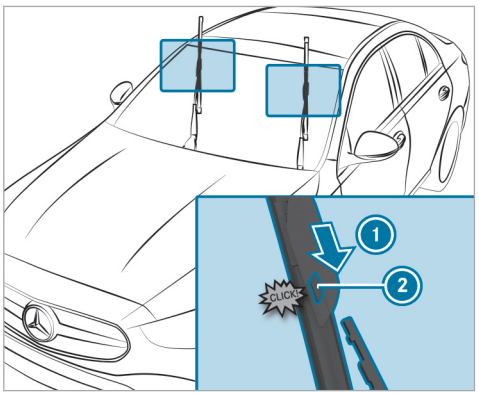

- Insert the new wiper blade in to the wiper arm in the direction of arrow ① until release knob ② engages.
- Make sure that the wiper blade is seated correctly.
- Fold the wiper arms back onto the windshield.
- Switch on the vehicle.
- Press the button on the combination switch.
  The wiper arms will return to their original positions.
- Switch off the vehicle.

Installing the wiper blades (variant 2)

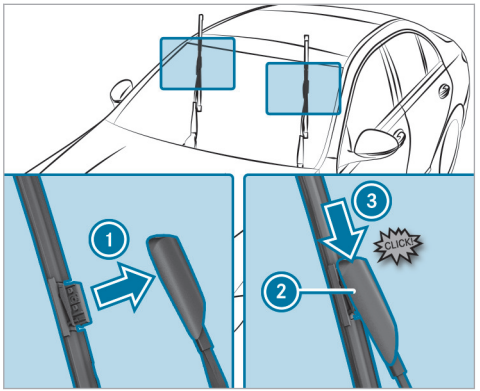

- Insert the new wiper blade into the wiper arm in the direction of arrow ①.
- Slide catch ② in the direction of arrow ③ until it engages in the locking position.
- Make sure that the wiper blade is seated correctly.
- Fold the wiper arms back onto the windshield.
- Switch on the vehicle.
- Press the button on the combination switch.
  The wiper arms will return to their original positions.
- Switch off the vehicle.

Maintenance display

A maintenance display can be found at the tip of the blade on the newly installed wiper blades.

F214 0032 13

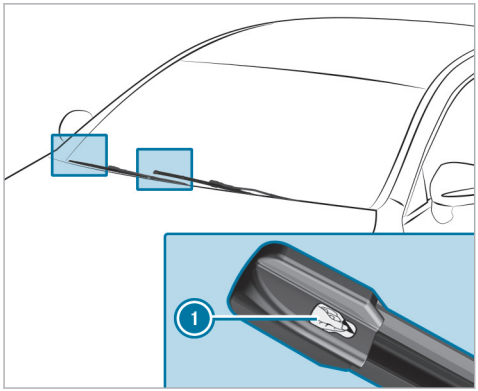

▶ Remove protective film (1) from the maintenance display.

When the color of the maintenance displays changes from black to yellow, you should replace the wiper blades.

Checking the engine oil level using the driver's display

Requirements

- The engine has been warmed up.
- The vehicle is parked on a level surface.
- The engine is running at idle speed.
- The hood is closed.

Determining the engine oil level can take up to 30 minutes with a normal driving style and even longer with an active driving style.

Driver's display:

↳ Service

The engine oil level is shown.

One of the following messages will appear on the driver's display:

- Engine Oil Level Measuring Now...: the engine oil level cannot be determined yet.

▶ Repeat the request after a maximum of 30 minutes' driving.

- Engine Oil Level OK and the bar display for indicating the engine oil level on the driver's display is green and is between "min" and "max": the engine oil level is correct.
- Engine Oil Level Refill 1,0 liq.gal. and the bar display for indicating the engine oil level on the driver's display is yellow and is below "min":

▶ Add 1.1 US qt (1 l) of engine oil.

- Engine Oil Level Reduce and the bar display for indicating the engine oil level on the driver's display is yellow and is above "max":

▶ Drain off any excess engine oil that has been added. To do so, consult a qualified specialist workshop.

- For Engine Oil Level Switch on Vehicle

▶ Switch on the vehicle to check the engine oil level.

- Engine Oil Level System Inoperative: The oil level sensor is defective or not connected.

▶ Consult a qualified specialist workshop.

- Engine Oil Level System Currently Unavailable

▶ Close the hood.

Information on washing the vehicle in a car wash

⚠ WARNING Risk of accident due to reduced braking effect after washing the vehicle

The braking effect is reduced after washing the vehicle.

▶ After the vehicle has been washed, brake carefully while paying attention to the traffic conditions until the braking effect has been fully restored.

! NOTE Damage from automatic braking

If one of the following functions is activated, the vehicle will brake automatically in certain situations:

- Active Brake Assist
- Active Distance Assist DISTRONIC
- HOLD function
- Active Parking Assist

To avoid damage to the vehicle, switch off these systems, e.g. when towing or using a car wash.

! NOTE Damage due to unsuitable car wash

▶ Before driving into a car wash make sure that the car wash is suitable for the vehicle dimensions.

▶ Ensure there is sufficient ground clearance between the underbody and the guide rails of the car wash.

▶ Ensure that the clearance width of the car wash, in particular the width of the guide rails, is sufficient.

To avoid damage to your vehicle when using a car wash, ensure the following beforehand:

- Active Distance Assist DISTRONIC is deactivated.
- the HOLD function is switched off.
- the 360° camera or the reversing camera is switched off.
- the vehicle is locked and the door handles retracted.
- the side windows and sliding sunroof are completely closed.
- the outside mirrors are folded in.
- the blower for the ventilation and heating is switched off.
- the windshield wiper switch is in position 0.
- the key is at a minimum distance of 20 ft (6 m) away from the vehicle. Otherwise, the trunk lid or a door could open unintentionally.

  This also applies to the Digital Vehicle Key.
- for car washes with a conveyor system:
  - Neutral N is engaged.
  - The vehicle is locked from the inside.
- Do not make any hand movements in the area of the overhead control panel or deactivate (→ page 394) the Sliding Sunroof and Roller Sunblind option in the settings for the MBUX interior assistant.

ⓘ If, after the car wash, you remove the wax from the windshield and wiper blades, this will prevent smearing and reduce wiper noise.

Preparing for a holiday

Notes on regularly inspecting wheels and tires

⚠ **WARNING** Risk of injury through damaged tires

Damaged tires can cause tire pressure loss.

▶ Check the tires regularly for signs of damage and replace any damaged tires immediately.

⚠ **WARNING** Risk of hydroplaning due to insufficient tire tread

Insufficient tire tread will result in reduced tire grip.

In heavy rain or slush the risk of hydroplaning is increased, in particular where speed is not adapted to suit the conditions.

▶ Thus, you should regularly check the tread depth and the condition of the tread across the entire width of all tires.

Minimum tread depth for:

- Summer tires: ⅛ in (3 mm)
- M+S tires: ⅙in (4 mm)

▶ For safety reasons, replace the tires before the legally-prescribed limit for the minimum tread depth is reached.

Carry out the following checks on all wheels regularly, at least once a month or as required, for example, prior to a long journey or driving off-road:

- Check the tire pressure (→ page 547).
- Visually inspect wheels and tires for damage.
- Check the valve caps.
- Visually inspect the tire tread depth and the tire contact surface across the entire width.

  The minimum tread depth for summer tires is ⅛ in (3 mm) and for winter tires ⅙ in (4 mm).

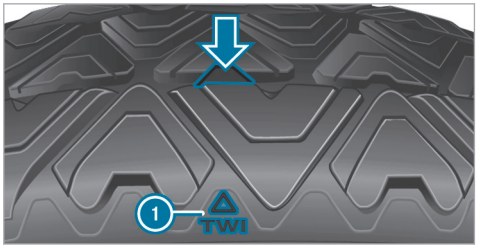

Six marks (1) show where the bar indicators (arrow) are integrated into the tire tread. They are visible once a tire tread depth of approximately 1⁄16 in (1.6 mm) has been reached.

Removing the safety vest

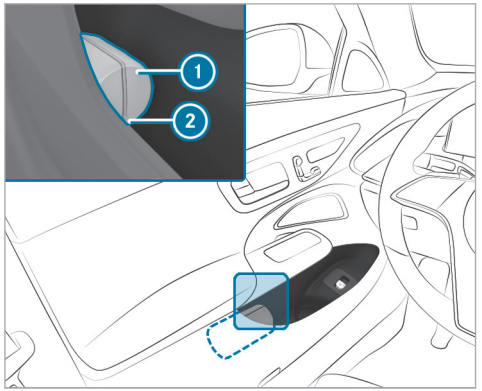

There is a safety vest compartment in the stowage compartments of all doors for storing a safety vest.

- ▶ To remove: pull out safety vest bag (1) by loop (2).
- ▶ Open safety vest bag (1) and pull out the safety vest.
- ▶ To stow: fold the reflective safety jacket, roll it up and stow it in safety jacket bag (1).
- ▶ Slide safety jacket bag (1) along the lower edge of the armrest into the safety jacket compartment. Meanwhile, ensure that loop (2) hangs out well within reach.

ⓘ Remove a new reflective safety jacket from its packaging material before sliding it into the safety jacket compartment. The packaging material may otherwise cause it to slip out or make removing it difficult.
Observe the legal requirements in each country.

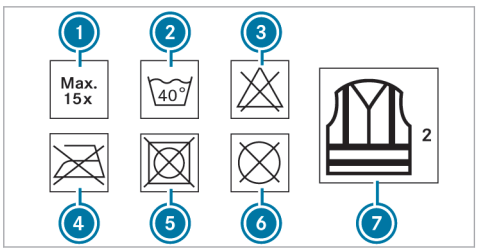

(1) Maximum number of washes
(2) Maximum wash temperature
(3) Do not bleach
(4) Do not iron
(5) Do not tumble dry
(6) Do not dry clean
(7) Class 2 safety vest

The requirements defined by the legal standard are only fulfilled if the safety vest is the correct size and is fully closed.

Replace the safety vest in the following cases:

- The reflective strips are damaged or dirty
- The maximum permissible number of washes is exceeded
- The fluorescence has faded, e.g. due to continuous exposure to sunlight.

Dispose of the safety vest in an environmentally responsible manner:

- To do so, contact your local waste disposal company.

F214 0032 13

Removing the warning triangle

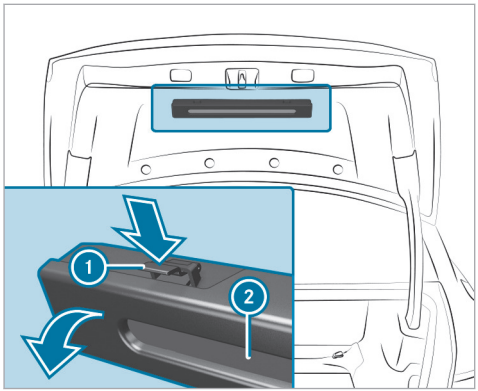

- ▶ Push warning triangle holder (1) on both sides in the direction of the arrow and open it.
- ▶ Remove warning triangle (2).

The warning triangle is located in the trunk lid.

First-aid kit (soft-sided) overview

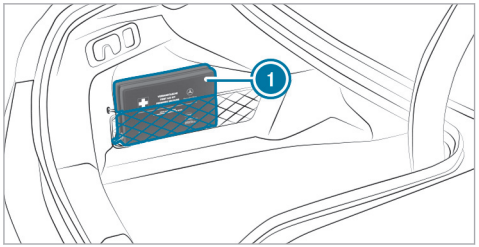

First-aid kit (soft sided) (1) is in the trunk in the left-hand stowage net.

Depending on the vehicle version, first-aid kit (soft-sided) (1) may be located elsewhere in the trunk

Map data update overview

As the content of a digital road map has a short life, outdated data may have a negative effect on all navigation functions. For the best MBUX navigation experience, you should install all of the map updates offered by Mercedes-Benz.

The following options are available for the update of map data:

- Online map update
- Updates from the Mercedes me Portal
- Update at an authorized Mercedes-Benz Center

  Additional costs can be incurred in this process.

Online map update

Requirements:

- Mercedes me connect is available.
- You have a Mercedes me user account.
- The Online Map Update service is available for your region.
- The service has been activated.

Installation takes place in the background as an automatic map update.

The MBUX multimedia system installs all of the available map updates for the North American regions in which the vehicle is located or is moved.

The online map update is activated at the latest after the next time the vehicle is switched on.

Updates from the Mercedes me Portal
The map data for several regions can also be updated manually. Log in with your Mercedes me user account at: https://www.mercedes-benz.de/

Follow the menu path My Mercedes me Account > Dashboard > Manage Vehicle > Manage Services > Online Map Update. Select the regions to be downloaded to a storage medium.

After the map data has been copied, connect the storage medium with your vehicle. Select the notification with information about a new version of the map data and start the installation. After the MBUX multimedia system has been restarted, the updated map data is used.

Entering a POI or address

Requirements
- For the online search:
  - There is an Internet connection.
  - Mercedes me connect is available.
  - You have set up a user account in the Mercedes me Portal.
  - The vehicle is connected with the user account and you have accepted the terms of use.
  - Further information can be found at: https://www.mercedes.me
  - The service is available.
  - The service has been activated at an authorized Mercedes-Benz Center.

ⓘ If Online Search is not available, the search is performed using the data of the digital map.

Multimedia system:

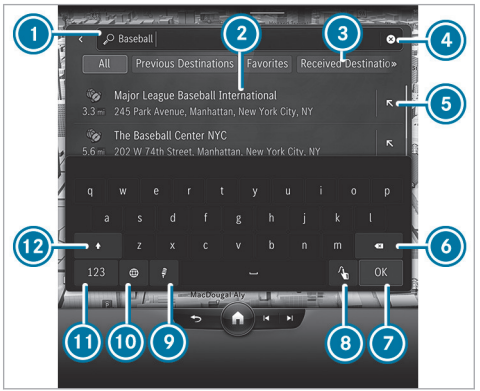

Example: entering a POI or address
1. Input line with current entry
2. Search result
3. Selects destination search, displays further destination searches with double arrow
4. Deletes an entry

⑤ Adopts the search result in the input line and continues the search
⑥ Deletes the last character entered
⑦ Hides the keypad
⑧ Switches to further entries
⑨ Starts the MBUX Voice Assistant (→ page 360)
⑩ Sets the written language
⑪ Switches to digits and special characters
⑫ Switches to upper-case or lower-case letters

▶ Enter a destination. The entries can be made in any order.
The search results are displayed in a list.

ⓘ Online search results for POIs may contain additional information, for example opening times and ratings. The information is provided by an online map service.
This online function is not available in all countries.

The following entries can be made, for example in ①:

- City, street, house number or street, city
- ZIP code
- POI name or POI category, e.g. Restaurants
- City, POI name
- Contact name
- Intersections in the following entry format: "road A" and "road B"
- Geo-coordinates (→ page 420)
- Three-word addresses from what3words (→ page 420)

  Entering three-word addresses is possible in the online search .

▶ Hide the keyboard with OK.
▶ Select the destination in the list.
The following menu shows the selected destination with the address information and a corresponding map section.
The menu enables the route to be calculated.

Searching for radio stations using station names or frequency entry

Multimedia system:

→ Radio

▶ Select .
▶ Enter a station name or frequency.
▶ Select a station.

Luggage and loading

Attaching a roof luggage rack

⚠ **WARNING** Risk of accident due to exceeding the maximum roof load

The vehicle center of gravity and the usual driving characteristics as well as the steering and braking characteristics alter.

If you exceed the maximum roof load, the driving characteristics, as well as steering and braking, will be greatly impaired.

▶ Never exceed the maximum roof load and adjust your driving style.

You will find information on the maximum roof load in the "Technical data" section in the printed Operator's Manual.

! NOTE Vehicle damage due to failure to observe the maximum permissible clearance height

If the vehicle height exceeds the maximum permissible clearance height, the roof and other vehicle parts may be damaged.

- Please observe the maximum clearance height indicated.
- If the vehicle exceeds the permissible clearance height, do not drive in.
- Take the modified vehicle height into account in the case of roof superstructures or other carrier systems.

! NOTE Damage to the panorama roof with power tilt/sliding panel due to non-approved roof luggage racks

The panorama roof with power tilt/sliding panel may be damaged by the roof luggage rack if you attempt to open it when using a roof luggage rack not tested and approved for Mercedes-Benz.

- When a roof luggage rack is installed, open the panorama roof with power tilt/sliding panel only if this has been tested and approved for Mercedes-Benz.

The panorama roof with power tilt/sliding panel may be raised to allow ventilation of the vehicle interior.

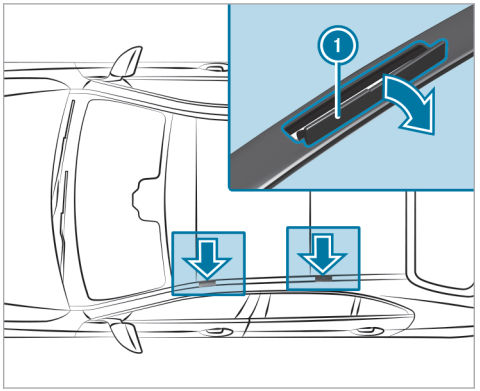

! NOTE Damage to the covers

The covers may be damaged and scratched when being opened.

- Do not use metallic or hard objects.

- Fold covers (1) carefully upwards in the direction of the arrow.

- Secure the roof luggage rack to the fastening points beneath covers (1).
- Comply with the installation instructions of the roof luggage rack manufacturer.
- Secure the load on the roof luggage rack.

Folding the rear seat backrests forward

WARNING Risk of becoming trapped when adjusting the seats

When you adjust a seat, you may trap yourself or a vehicle occupant.

- When adjusting a seat, make sure that no one has any body parts in the sweep of the seat.

WARNING Risk of an accident because the seat backrest is not engaged

The seat backrest may fold forwards.

There is a risk of the following, in particular:

- The vehicle occupant may be pressed against the seat belt. The seat belt cannot protect as intended and could cause additional injury.
- A child restraint system is no longer properly supported or properly positioned and may no longer fulfill its function as intended.
- The seat backrest cannot restrain objects or goods in the trunk or cargo compartment.

Always ensure that the seat backrest is engaged, especially:

- After the seat has been adjusted.
- After the cargo compartment enlargement has been folded forwards

Make sure that the red marking of the lock verification indicator is no longer visible. Otherwise, the seat backrest is not locked.

Always ensure that all vehicle occupants have their seat belts fastened correctly and are sitting properly. Particular attention must be paid to children.

Requirements

- The rear seat backrest head restraints are fully inserted.
- The rear armrest has been folded up.

Folding the rear outer seat backrests forward

You can fold the center and right seat backrests forwards separately.

The left seat backrest can be folded forwards only together with the center seat backrest.

If you no longer require the folded-down rear seat backrest as a load area, fold the backrest back into place.

- Ensure that the center seat backrest is in an upright position and locked to the left seat backrest (→ page 187).

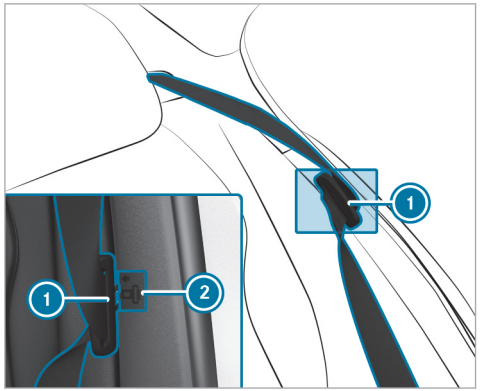

- Press the seat belt tongue of seat belt (1) into marked position (2).
- Move the driver's or front passenger seat forwards, if necessary.

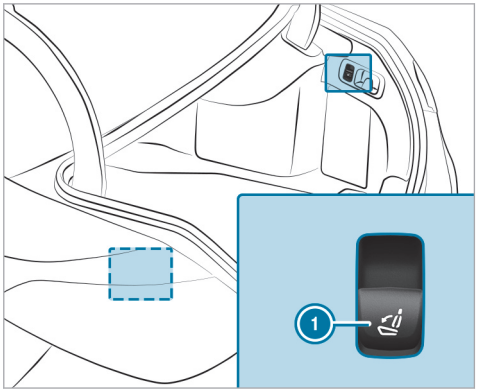

- **To fold down the left seat backrest:** pull briefly on left-hand button (1).
  The left seat backrest folds forward together with the center seat backrest.

  If the left seat backrest is not locked with the center seat backrest, this will be shown on the central display.

- **To fold down the right seat backrest:** pull briefly on right-hand button (1).
  The right-hand seat backrest folds forwards.

ⓘ If you wish to fold only one of the outer seat backrests forwards, fold the right seat backrest forwards.

Folding the center rear seat backrest forwards separately

If you no longer require the folded-down seat backrest as a loading area, fold the seat backrest back into place.

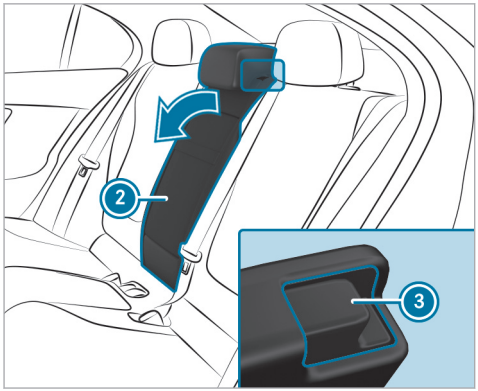

- ▶ Press release catch (3).
- ▶ Fold seat backrest (2) forwards.

Folding the rear seat backrest back

⚠ WARNING Risk of becoming trapped when adjusting the seats

When you adjust a seat, you may trap yourself or a vehicle occupant.

- ▶ When adjusting a seat, make sure that no one has any body parts in the sweep of the seat.

⚠ WARNING Risk of an accident because the seat backrest is not engaged

The seat backrest may fold forwards.

There is a risk of the following, in particular:

- The vehicle occupant may be pressed against the seat belt. The seat belt cannot protect as intended and could cause additional injury.
- A child restraint system is no longer properly supported or properly positioned and may no longer fulfill its function as intended.
- The seat backrest cannot restrain objects or goods in the trunk or cargo compartment.

Always ensure that the seat backrest is engaged, especially:

- After the seat has been adjusted.
- After the cargo compartment enlargement has been folded forwards

Make sure that the red marking of the lock verification indicator is no longer visible. Otherwise, the seat backrest is not locked.

Always ensure that all vehicle occupants have their seat belts fastened correctly and are sitting properly. Particular attention must be paid to children.

! NOTE Damage caused by trapping the seat belt when folding back the seat backrest

The seat belt could become trapped and thus damaged when the seat backrest is folded back.

- Make sure that the seat belt is not trapped when folding back the seat backrest.

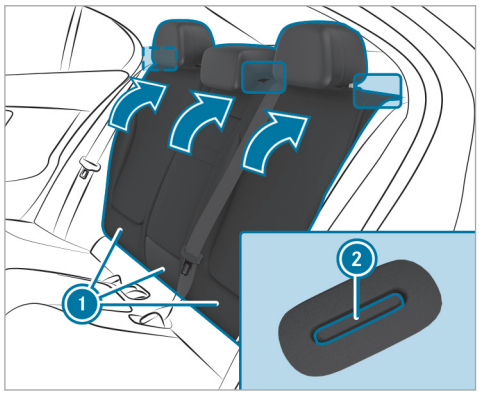

- Move the driver's or front passenger seat forwards, if necessary.
- Swivel seat backrest (1) back until it engages. If the seat backrest is not engaged and locked in place, red lock verification indicator (2) will be visible.

Opening the stowage space under the trunk floor

! **NOTE** Damage to the handle in the trunk floor

If the handle in the trunk is left protruding, the handle may be damaged.

- Before closing the trunk lid, detach the handle and press it down closed again.

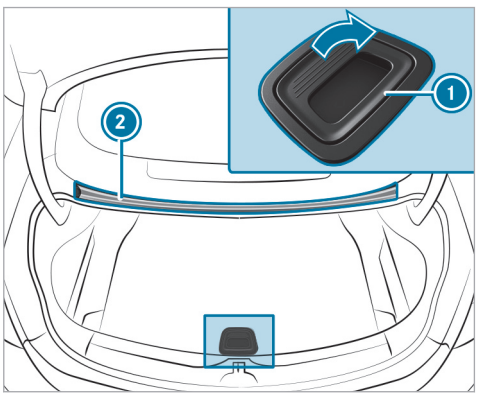

- Pull handle (1) up and hook it on to top seal (2) of the cargo compartment.

Overview of the tie-down eyes

Observe the notes on loading the vehicle (→ page 180).

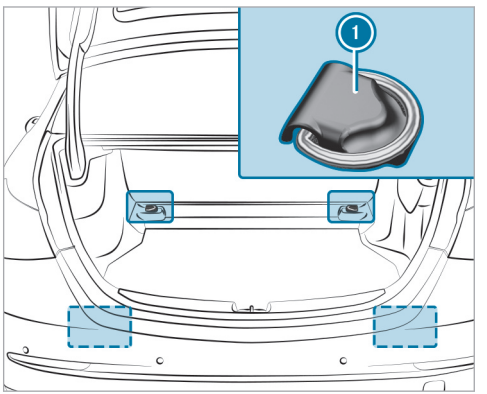

(1) Tie-down eyes

Overview of the front storage compartments

WARNING Risk of injury due to objects being stowed incorrectly

If objects in the vehicle interior are stowed incorrectly, they can slide or be thrown around and hit vehicle occupants. In addition, cup holders, open storage spaces and mobile phone brackets cannot always retain all objects they contain.

There is a risk of injury, particularly in the event of sudden braking or a sudden change in direction.

- Always stow objects in such a way that they cannot be thrown around in such situations.
- Always make sure that objects do not protrude from storage spaces, parcel nets or storage nets.
- Close the lockable storage spaces before starting a journey.
- Always stow and secure heavy, hard, pointed, sharp-edged, fragile or bulky objects in the trunk.

Observe the notes on loading the vehicle.

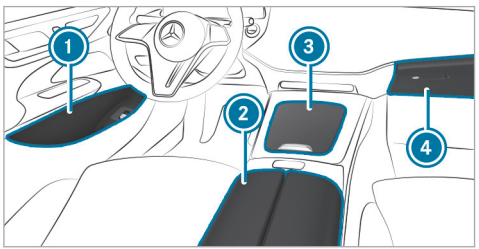

1. Stowage spaces in the doors
2. Stowage and telephone compartment beneath the armrest with USB ports
3. Storage compartment in the front center console, depending on vehicle equipment with cupholders, USB ports and charging module for wireless charging of mobile phones
4. Glove box

ⓘ The compartment under armrest 2 and the storage compartment in center console 3 are connected by a duct through which cables can be fed. Thus USB connection cables for connecting devices can be stowed in both compartments, for example.

ⓘ The rubber mat in the storage compartment in front center console 3 can be removed for cleaning with clean, lukewarm water. Please comply with the notes on caring for the interior (→ page 517).

Locking/unlocking the glove box

WARNING Risk of injury due to objects being stowed incorrectly

If objects in the vehicle interior are stowed incorrectly, they can slide or be thrown around and hit vehicle occupants. In addition, cup holders, open storage spaces and mobile phone brackets cannot always retain all objects they contain.

There is a risk of injury, particularly in the event of sudden braking or a sudden change in direction.

- Always stow objects in such a way that they cannot be thrown around in such situations.
- Always make sure that objects do not protrude from storage spaces, parcel nets or storage nets.
- Close the lockable storage spaces before starting a journey.
- Always stow and secure heavy, hard, pointed, sharp-edged, fragile or bulky objects in the trunk.

Observe the notes on loading the vehicle.

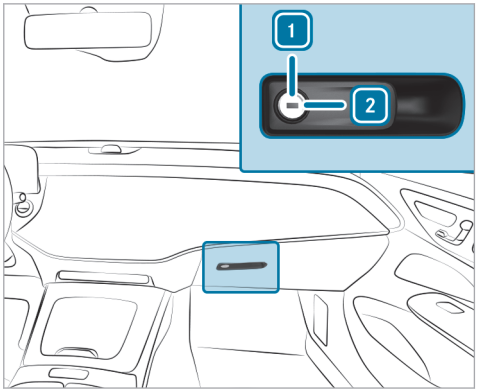

- Turn the emergency key a quarter turn clockwise 2 (to lock) or counter-clockwise 1 (to unlock).

Ice and snow

Notes on regularly inspecting wheels and tires

WARNING Risk of injury through damaged tires

Damaged tires can cause tire pressure loss.

- Check the tires regularly for signs of damage and replace any damaged tires immediately.

WARNING Risk of hydroplaning due to insufficient tire tread

Insufficient tire tread will result in reduced tire grip.

In heavy rain or slush the risk of hydroplaning is increased, in particular where speed is not adapted to suit the conditions.

- Thus, you should regularly check the tread depth and the condition of the tread across the entire width of all tires.

Minimum tread depth for:

- Summer tires: ⅛ in (3 mm)
- M+S tires: 1⁄6in (4 mm)

▶ For safety reasons, replace the tires before the legally-prescribed limit for the minimum tread depth is reached.

Carry out the following checks on all wheels regularly, at least once a month or as required, for example, prior to a long journey or driving off-road:

- Check the tire pressure (→ page 547).
- Visually inspect wheels and tires for damage.
- Check the valve caps.
- Visually inspect the tire tread depth and the tire contact surface across the entire width.

  The minimum tread depth for summer tires is ⅛ in (3 mm) and for winter tires 1⁄6 in (4 mm).

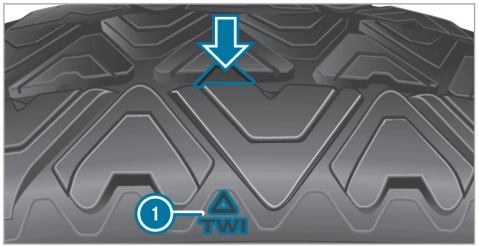

Six marks (1) show where the bar indicators (arrow) are integrated into the tire tread. They are visible once a tire tread depth of approximately 1⁄16 in (1.6 mm) has been reached.

Notes on snow chains

⚠ WARNING Risk of accident due to incorrectly installed snow chains

If you have installed snow chains on the front wheels, they may drag against the vehicle body or chassis components.

▶ Never install snow chains on the front wheels.

▶ Only install snow chains on the rear wheels in pairs.

! NOTE Damage to components of the vehicle body or chassis due to mounted snow chains

If you mount snow chains to the front wheels of 4MATIC vehicles, you may damage components of the vehicle body or chassis.

▶ Only mount snow chains to the rear wheels of 4MATIC vehicles.

! NOTE Damage to wheel trims due to snow chains being installed

If you install snow chains on aluminum wheels you could damage the wheel trims.

▶ Remove the wheel trims from the aluminum wheels before installing snow chains.

Observe the following notes when using snow chains:

- Snow chains are only permissible for certain wheel/tire combinations. You can obtain information about this from an authorized Mercedes-Benz Service Center.
- For safety reasons, only use snow chains that have been specifically approved for your vehicle by Mercedes-Benz, or snow chains with the same quality standard.
- Comply with the installation instructions of the snow chain manufacturer.
- If snow chains are installed, the maximum permissible speed is 30 mph (50 km/h).
- **Vehicles with Active Parking Assist:** do not use Active Parking Assist when snow chains are installed.

ⓘ You can deactivate ESP® to pull away (→ page 276). This allows the wheels to spin, achieving an increased driving force.

Notes on windshield washer fluid

Observe the notes on operating fluids (→ page 691).

⚠ WARNING - Risk of fire and injury from windshield washer concentrate

Windshield washer concentrate is highly flammable. It could ignite if it comes into contact with hot engine component parts or the exhaust system.

▶ Make sure that no windshield washer concentrate spills out next to the filler opening.

! NOTE Damage to the exterior lighting due to unsuitable windshield washer fluid

Unsuitable windshield washer fluid may damage the plastic surface of the exterior lighting.

▶ Only use windshield washer fluid which is also suitable for use on plastic surfaces, e.g. MB SummerFit or MB WinterFit.

! NOTE Blocked spray nozzles caused by mixing windshield washer fluids

▶ Do not mix MB SummerFit and MB WinterFit with other windshield washer fluids.

Do not use distilled or de-ionised water. Otherwise, the fill level sensor may be triggered erroneously.

Recommended windshield washer fluid:

- Above freezing point: e.g. MB SummerFit
- Below freezing point: e.g. MB WinterFit

For the correct mixing ratio, refer to the information on the antifreeze container.

Mix washing water with windshield washer fluid all year round.

Refilling the windshield washer system

WARNING Risk of burns when opening the hood

If you open the hood in the event of an overheated engine or fire in the engine compartment, the following situations may occur:

- You may come into contact with hot gases.
- You may come into contact with other escaping hot operating fluids.

- Before opening the hood, allow the engine to cool down.
- In the event of a fire in the engine compartment, keep the hood closed and call the fire service.

WARNING Risk of injury due to moving parts

Components in the engine compartment may continue to run or start unexpectedly even when the drive system is switched off.

Observe the following if you must open the hood:

- Switch off the vehicle.
- Never touch the danger zones surrounding moving components, e.g. the rotation area of the fan.
- Remove jewelery and watches.
- Keep items of clothing and hair away from moving parts.

WARNING Risk of burns from hot component parts in the engine compartment

Certain component parts in the engine compartment can be very hot, e.g. the engine, the cooler and parts of the exhaust system.

- Allow the engine to cool down and only touch component parts described in the following.

WARNING - Risk of fire and injury from windshield washer concentrate

Windshield washer concentrate is highly flammable. It could ignite if it comes into contact with hot engine component parts or the exhaust system.

- Make sure that no windshield washer concentrate spills out next to the filler opening.

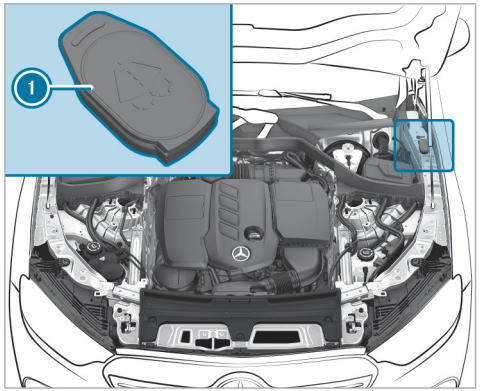

- Open cap (1) by the tab.
- Add washer fluid.

Changing the windshield wiper blades

WARNING Risk of becoming trapped if the windshield wipers are switched on while wiper blades are being replaced

If the windshield wipers begin to move while you are changing the wiper blades, you can be trapped by the wiper arm.

- Always switch off the windshield wipers and vehicle before changing the wiper blades.

Moving the wiper arms into the replacement position

- Switch the vehicle on and then off again immediately.
- Within around 15 seconds, press the button on the combination switch for approximately three seconds (→ page 213). The wiper arms will move into the replacement position.

ⓘ Depending on the production period of the vehicle, different variants of the wiper blades will have been installed.

Removing the wiper blades (variant 1)

- Fold the wiper arms away from the windshield.

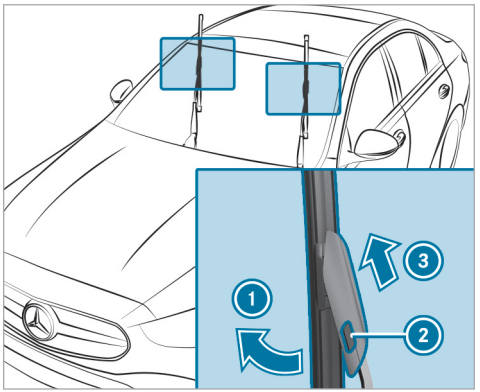

- Hold the wiper arm with one hand. With the other hand, turn the wiper blade away from the wiper arm in the direction of arrow (1) as far as it will go.
- Press release knob (2).

- Remove the wiper blade in the direction of arrow (3) away from the wiper arm.

Removing the wiper blades (variant 2)

- Fold the wiper arms away from the windshield.

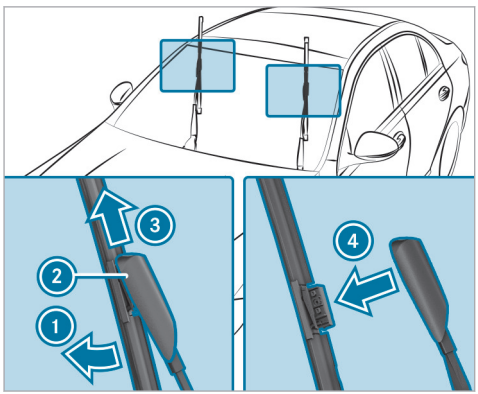

- Hold the wiper arm with one hand. With the other hand, turn the wiper blade away from the wiper arm in the direction of arrow (1) as far as it will go.
- Slide catch (2) in the direction of arrow (3) until it engages in the removal position.
- Remove the wiper blade from the wiper arm in the direction of arrow (4).

Installing the wiper blades (variant 1)

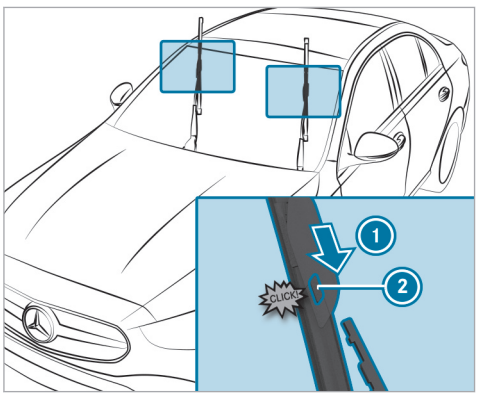

- Insert the new wiper blade in to the wiper arm in the direction of arrow (1) until release knob (2) engages.
- Make sure that the wiper blade is seated correctly.
- Fold the wiper arms back onto the windshield.
- Switch on the vehicle.
- Press the button on the combination switch.
  The wiper arms will return to their original positions.
- Switch off the vehicle.

Installing the wiper blades (variant 2)

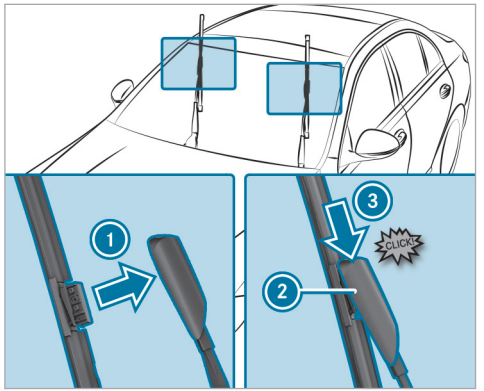

- Insert the new wiper blade into the wiper arm in the direction of arrow (1).
- Slide catch (2) in the direction of arrow (3) until it engages in the locking position.
- Make sure that the wiper blade is seated correctly.
- Fold the wiper arms back onto the windshield.
- Switch on the vehicle.
- Press the button on the combination switch.
  The wiper arms will return to their original positions.
- Switch off the vehicle.

Maintenance display

A maintenance display can be found at the tip of the blade on the newly installed wiper blades.

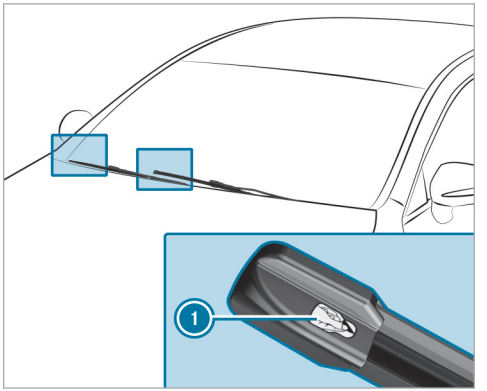

- Remove protective film (1) from the maintenance display.

When the color of the maintenance displays changes from black to yellow, you should replace the wiper blades.

Help in the event of a breakdown

Activating/deactivating the hazard warning lights

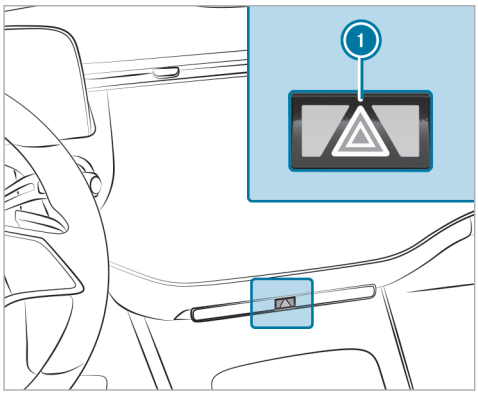

▶ Press button (1).

The hazard warning lights will switch on automatically if:

- the air bag has been deployed.

Removing the safety vest

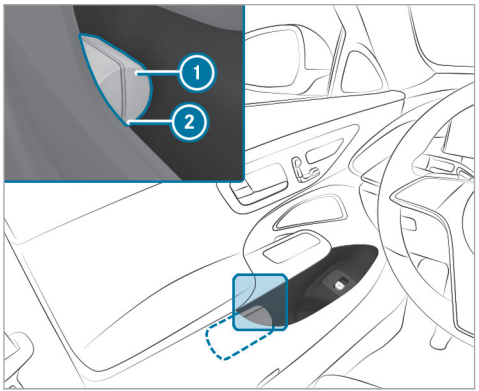

There is a safety vest compartment in the stowage compartments of all doors for storing a safety vest.

▶ To remove: pull out safety vest bag (1) by loop (2).
▶ Open safety vest bag (1) and pull out the safety vest.
▶ To stow: fold the reflective safety jacket, roll it up and stow it in safety jacket bag (1).
▶ Slide safety jacket bag (1) along the lower edge of the armrest into the safety jacket compartment. Meanwhile, ensure that loop (2) hangs out well within reach.

ⓘ Remove a new reflective safety jacket from its packaging material before sliding it into the safety jacket compartment. The packaging material may otherwise cause it to slip out or make removing it difficult.
Observe the legal requirements in each country.

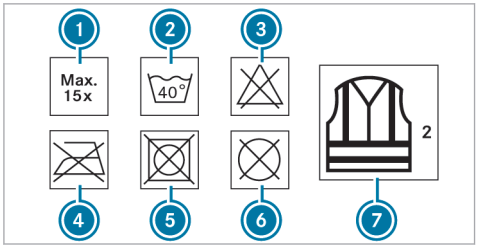

1. Maximum number of washes
2. Maximum wash temperature
3. Do not bleach
4. Do not iron
5. Do not tumble dry
6. Do not dry clean
7. Class 2 safety vest

The requirements defined by the legal standard are only fulfilled if the safety vest is the correct size and is fully closed.

Replace the safety vest in the following cases:

- The reflective strips are damaged or dirty
- The maximum permissible number of washes is exceeded
- The fluorescence has faded, e.g. due to continuous exposure to sunlight.

Dispose of the safety vest in an environmentally responsible manner:

- To do so, contact your local waste disposal company.

Removing the warning triangle

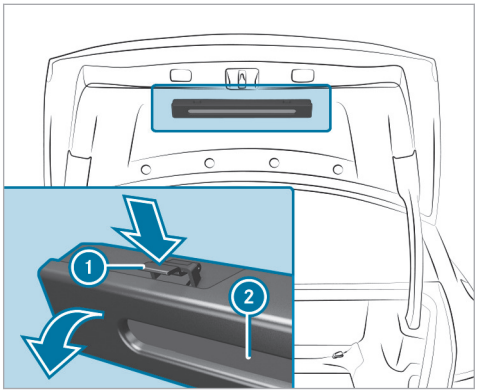

- ▶ Push warning triangle holder (1) on both sides in the direction of the arrow and open it.
- ▶ Remove warning triangle (2).

The warning triangle is located in the trunk lid.

First-aid kit (soft-sided) overview

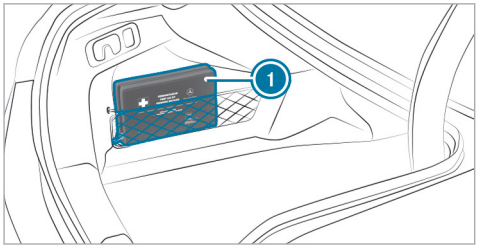

First-aid kit (soft sided) 1 is in the trunk in the left-hand stowage net.

Depending on the vehicle version, first-aid kit (soft-sided) 1 may be located elsewhere in the trunk

QR code for rescue card

QR codes are attached in the fuel filler flap and on the opposite side on the B-pillar. In the event of an accident, rescue services can use the QR code to quickly find the appropriate rescue card for your vehicle. The current rescue card contains the most important information about your vehicle (e.g. the routing of the electric lines) in compact form.

Further information can be obtained at https://www.mercedes-benz.de/qr-code

Starting assistance and charging the 12 V battery

Preparing starting assistance/charging

- Secure the vehicle by applying the electric parking brake.
- Shift the transmission to position P.
- Switch off the vehicle and all electrical consumers.
- Open the hood.

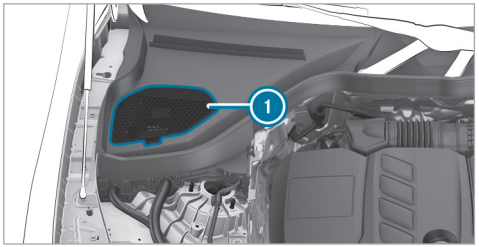

- Open cover 1 of the jump-start connection point.

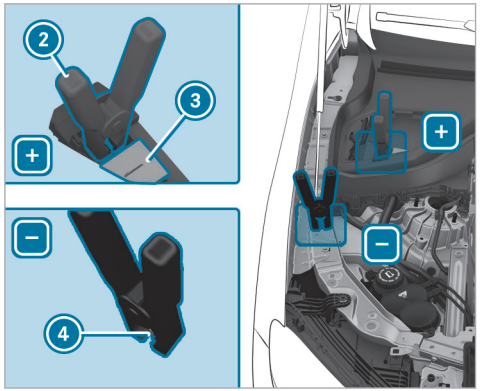

- Open cover (3) of positive contact (2) on the jump-start connection point.

Starting assistance

- Connect positive terminal (2) on your vehicle to positive terminal of the donor battery using the jumper cable. Always begin with positive clamp (2) on your own vehicle first.
- Start the engine of the donor vehicle and run it at idling speed.
- Connect the negative terminal of the donor battery to ground point (4) of your vehicle using the jumper cable. Begin with the donor battery first.
- Start the engine of your own vehicle.
- Let the engines run for several minutes.
- Before disconnecting the jumper cables, switch on an electrical consumer in your own vehicle, e.g. the rear window defroster or the lighting.

When the starting assistance procedure is complete:

- Remove the jumper cables from ground point (4) first and the negative terminal of the donor battery, then from positive contact (2) and the positive terminal of the donor battery. Begin each time with the contacts on your own vehicle first.
- Close cover (3) of positive terminal (2) after removing the jumper cables.
- Close cover (1).

Further information can be obtained at a qualified specialist workshop.

Charging

- Connect positive contact (2) on the vehicle to the positive terminal of the charger using the charging cable. Always begin with positive contact (2) on the vehicle.
- Connect the negative terminal of the charger and ground point (4) on the vehicle with the charging cable. Start with the charger.
- Start the charging process.

When the charging process is complete:

- Remove the charging cable from ground point (4) first and the negative terminal of the charger, then from positive contact (2) and the positive terminal of the charger. Begin each time with the contacts on the vehicle.
- After removing the charging cable, close cover (3) of positive contact (2).
- Close cover (1).

Further information can be obtained at a qualified specialist workshop.

Notes on electrical fuses

WARNING Risk of accident and injury due to overloaded lines

If you manipulate or bridge a faulty fuse or if you replace it with a fuse with a higher amperage, the electric line could be overloaded.

This could result in a fire.

- Always replace faulty fuses with specified new fuses containing the correct amperage.

NOTE Damage due to incorrect fuses

Using incorrect fuses can result in damage to electrical components or systems or their functions being considerably restricted.

- Use only fuses approved for Mercedes-Benz with the respective specified fuse rating.

Blown fuses must be replaced with fuses of the same rating, which you can recognize by the color and the label. The fuse ratings and further information to be observed can be found in the fuse assignment diagram.

Fuse assignment diagram: on the fuse box in the trunk (→ page 544).

NOTE Damage or malfunctions caused by moisture

Moisture may cause damage to the electrical system or cause it to malfunction.

- When the fuse box is open, make sure that no moisture can enter the fuse box.
- When closing the fuse box, make sure that the seal of the lid is positioned correctly on the fuse box.

If the newly inserted fuse also blows, have the cause traced and rectified at a qualified specialist workshop.

Ensure the following before replacing a fuse:

- The vehicle is secured against rolling away.
- All electrical consumers are switched off.
- The vehicle is switched off.

The electrical fuses are located in various fuse boxes:

- Fuse box on the driver's side of the engine compartment (→ page 542)
- Fuse box on the driver's side of the cockpit (→ page 543)
- Fuse box in the front passenger footwell (→ page 543)
- Fuse box in the trunk (→ page 544)

Notes on flat tire

WARNING Risk of accident due to a flat tire

A flat tire severely affects the driving characteristics as well as the steering and braking of the vehicle.

Tires without run-flat characteristics:

- Do not drive with a flat tire.

▶ Change the flat tire immediately with an emergency spare wheel or spare wheel. Alternatively, consult a qualified specialist workshop.

Tires with run-flat characteristics:

▶ Observe the information and warning notes on MOExtended tires (run-flat tires).

In the event of a flat tire, the following options are available depending on your vehicle's equipment:

- **Vehicles with MOExtended tires:** it is possible to continue the journey for a short period of time. Make sure you observe the notes on MOExtended tires (run-flat tire) (→ page 522).
- **Vehicles with a TIREFIT kit:** you can seal the tire so that it is possible to continue the journey for a short period of time. To do this, use the TIREFIT kit (→ page 524).
- **Vehicles with Mercedes me connect:** you can make a call for breakdown assistance via the overhead control panel in the case of a breakdown (→ page 469).
- **All vehicles:** change the wheel (→ page 568).

ⓘ The emergency spare wheel is available only in certain countries (→ page 574).
Vehicles equipped with MOExtended tires are not equipped with a TIREFIT kit at the factory. It is therefore recommended that you additionally equip your vehicle with a TIREFIT kit if you mount tires that do not feature run-flat characteristics, e.g. winter tires. A TIREFIT kit may be obtained from a qualified specialist workshop.
Vehicles with a Mercedes-Benz emergency call system and that are not equipped with a TIREFIT kit: in the event of a flat tire, contact the Customer Assistance Center for the Mercedes-Benz emergency call system .

Overview of the tire-change tool kit

Apart from some country-specific variants, vehicles are not equipped with a tire-change tool kit. Consult a qualified specialist workshop to find out which wheel change tools are necessary and approved for changing a wheel on your vehicle.

You require the following tools, forexample, to change a wheel:

- Jack
- Chock
- Lug wrench
- Alignment bolt

The tire-change tool kit is located in tool bag ① in the trunk.

ⓘ When stowing the tool bag, make sure that it is adequately secured.

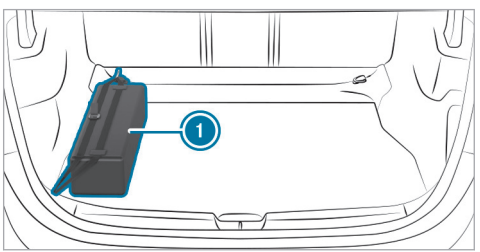

The tool bag contains:

- Jack

- Gloves
- Lug wrench
- Alignment bolt
- Folding chock
- Ratchet for jack

TIREFIT kit storage location

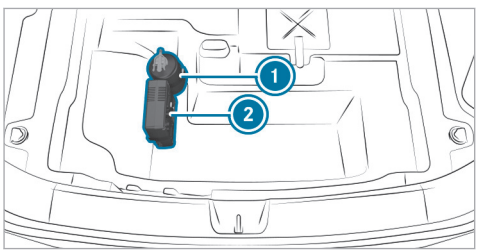

(1) Tire sealant bottle
(2) Tire inflation compressor

The TIREFIT kit is located under the trunk floor when the vehicle is delivered.

Depending on the vehicle version, the TIREFIT kit may be located elsewhere in the trunk.

ⓘ Depending on the power category (LK), the tire inflation compressor weighs as follows:

- LK2 – 12 V/15 A, 180 W, 2 lbs (0.9 kg)

You can find information on the power category (LK) and/or electrical data on the back of the tire inflation compressor.
The tire inflation compressor is maintenance-free. If there is a malfunction, please contact a qualified specialist workshop.

Towing the vehicle with both axles on the ground

▶ Observe the notes on the permitted towing methods.

▶ Make sure that the battery is connected and charged.

Observe the following points when the battery is discharged:

- the vehicle cannot be started.
- the electric parking brake cannot be released or applied
- **Vehicles with automatic transmission:** the transmission cannot be shifted to position N or P.

ⓘ **Vehicles with automatic transmission:** if the transmission cannot be shifted to position N or if the display does not show anything, transport the vehicle (→ page 537, 539). A towing vehicle with lifting equipment is required for vehicle transportation.

! **NOTE** Damage due to towing away at excessively high speeds or over long distances

The drivetrain could be damaged when towing at excessively high speeds or over long distances.

▶ A towing speed of 30 mph (50 km/h) must not be exceeded.

▶ A towing distance of 30 miles (50 km) must not be exceeded.

WARNING Risk of accident when towing a vehicle which is too heavy

If the vehicle to be tow-started or towed away is heavier than the permissible gross mass of your vehicle, the following situations can occur:

- The towing eye may become detached.
- The vehicle/trailer combination may swerve or rollover.

▶ Before tow-starting or towing away, check if the vehicle to be tow-started or towed away exceeds the permissible gross mass.

If a vehicle has to be tow-started or towed away, its permissible gross mass must not exceed the permissible gross mass of the towing vehicle.

▶ Information on the permissible gross mass of the vehicle can be found on the vehicle identification plate (→ page 690).

▶ **Vehicles with automatic transmission:** do not open the driver's door or front passenger door; the transmission otherwise automatically shifts to position P.

▶ Install the towing eye (→ page 540).

▶ Fasten the towing device.

NOTE Damage due to incorrect connection of the tow bar

▶ Only connect the tow rope or tow bar to the towing eyes.

▶ Deactivate the automatic locking mechanism (→ page 141).

▶ Do not activate the HOLD function.

▶ Deactivate the tow-away alarm (→ page 160).

▶ Deactivate Active Brake Assist (→ page 306).

▶ **Vehicles with automatic transmission:** shift to position N.

▶ Release the electric parking brake.

WARNING Risk of accident due to limited safety-related functions during the towing process

Safety-related functions are limited or no longer available in the following situations:

- The vehicle is switched off.
- The brake system or power steering system is malfunctioning.
- The energy supply or the on-board electrical system is malfunctioning.

When your vehicle is towed away, significantly more effort may be required to steer and brake than is normally required.

▶ Use a tow bar.

▶ Make sure that the steering wheel can move freely before towing the vehicle away.

NOTE Damage due to excessive tractive power

If you pull away sharply, the tractive power may be too high and the vehicles could be damaged.

- Pull away slowly and smoothly.

Expert tips

Additional functions of buttons

Opening and closing the windows using the air-recirculation button (convenience closing/opening)

When air-recirculation mode is activated, the side windows will be closed automatically, e.g. before you enter a tunnel. When air-recirculation mode is deactivated, the side windows will be moved back to their original position automatically.

WARNING Risk of entrapment due to not paying attention during convenience closing

When the convenience closing feature is operating, parts of the body could become trapped in the closing area of the side window and the sliding sunroof.

- When the convenience closing feature is operating, monitor the entire closing process and make sure that no body parts are in the closing area.

WARNING Risk of entrapment due to not paying attention during convenience closing

When the convenience closing feature is operating, parts of the body could become trapped in the closing area of the side windows.

- When the convenience closing feature is operating, monitor the entire closing process and make sure that no body parts are in the closing area.

- **To close windows:** press and hold the button  in the climate bar in the central display or in the air conditioning control panel until the windows move.
  The windows close and air-recirculation mode switches on.

WARNING Risk of entrapment from the convenience opening feature

During convenience opening parts of the body could be drawn in or become trapped between the side window and window frame.

- When opening, make sure that nobody is touching the side windows.
- If someone becomes trapped, immediately press the  button in the door to open the side windows.
  The side windows stop.
- To continue closing the side windows, pull on the button.

- **To reopen closed windows:** press and hold  the button in the climate bar in the

central display or in the air conditioning control panel until the windows move.
The windows move back to their original position and air-recirculation mode switches off.

Vehicles with a sliding sunroof: the sliding sunroof closes or opens simultaneously.

If body parts become entrapped in the sliding sunroof:

- **To stop:** press the button.
- **To open:** pull the button back.

Resetting the climate control settings

- Press and hold the Climate Menu entry on the climate bar of the multimedia system for four seconds.
The climate control settings will be reset to the basic settings.

Useful vehicle functions

Storing the parking position of the front-passenger outside mirror using the memory button

Requirements:

- Reverse gear has not been engaged.

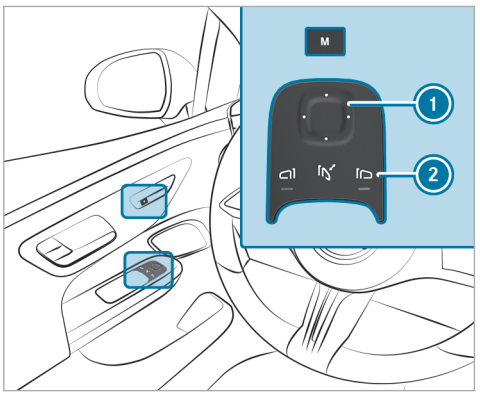

- Use button 2 to select the front-passenger outside mirror.
- Move the front-passenger outside mirror into the desired parking position using button 1.
- Press the M button.
- Confirm immediately using button 1 to store the setting.

ⓘ No more than three seconds may pass between the M button and button 1 being pressed. The mirror adjustment will be canceled after three seconds.

Tips for on the move

Vehicle conditions for automatic engine stop or start

Conditions for automatic engine stop:

- The ECO start/stop function is switched on.
- The brake system does not require a running engine.
- The atmospheric air pressure is within the range that is suitable for the system.

- The engine is at normal operating temperature.
- Engine diagnostics are not active.
- The transmission oil temperature is within the range that is suitable for the system.
- The temperature in the vehicle interior is within the set range.
- The fuel tank is sufficiently full.
- The system detects that there is no moisture on the windshield when the air conditioning system is switched on.
- The system does not detect a steep gradient.
- The hood is closed.

Conditions for automatic engine start:

- The brake system requires a running engine.
- The atmospheric air pressure has exceeded the range that is suitable for the system.
- Engine diagnostics require a running engine.
- The transmission oil temperature has exceeded the range that is suitable for the system.
- The temperature in the vehicle interior deviates from the set range.
- The system detects moisture on the windshield when the air conditioning system is switched on.

Good to know

Deactivating the function of the key

Vehicles with KEYLESS-GO: if you deactivate the function of the SmartKey, the KEYLESS-GO functions will also be deactivated. Access or drive authorization by KEYLESS-GO will then no longer be possible with that particular SmartKey. Activate the function of the SmartKey so that all its functions will again be available.

You can also deactivate the function of the SmartKey to reduce the energy consumption of the SmartKey if you do not use the vehicle or a SmartKey for an extended period of time.

▶ Press and hold the button on the SmartKey.

▶ With the key button pressed, immediately press key button twice in quick succession.
The indicator light of the key lights up once briefly and once for a long time.

ⓘ The following options for re-activating the SmartKey are available:

- Press any button on the SmartKey.
- Start the vehicle with the SmartKey in the marked space in the center console (→ page 237).

Overview of the Mercedes-Benz emergency call system

eCall can help to reduce the time between an accident and the arrival of emergency services at the site of the accident. It helps locate an accident site in places that are difficult to access. However, even if a vehicle is equipped with eCall, this does not mean the system is ON. As such, eCall does not replace dialing 911 in the event of an accident.

An emergency call can be made automatically or manually.

Only make emergency calls if you or others are in need of rescue. Do not make an emergency call in the event of a breakdown or a similar situation.

Messages on the display

SOS NOT READY: the vehicle is not on or eCall not available.

During an active emergency call, <schar> appears in the display.

You can find more information on the regional availability of eCall at: https://www.mercedes-benz-mobile.com/extra/ecall/

ⓘ If there is a malfunction of the emergency call system, the loudspeakers, microphone, air bag or the SOS button, for example, are faulty.

You can recognize a malfunction in the emergency call system by the following displays:

- A corresponding message will also appear in the driver's display.
- The SOS button lights up red continuously.

Emergency guide

In the event of an accident or breakdown, the emergency guide shows safety notes on the central display.

These include, for example:

- Recommended actions when leaving the vehicle
- Procedure for safely removing seat belts in the event of an accident whereby the vehicle comes to rest on its roof

The emergency guide is activated in the following situations:

- Occupant protection system has been triggered
- An emergency call is made
- Certain breakdown situations

ⓘ The availability as well as the scope of the emergency guide can vary depending in the country and vehicle equipment.

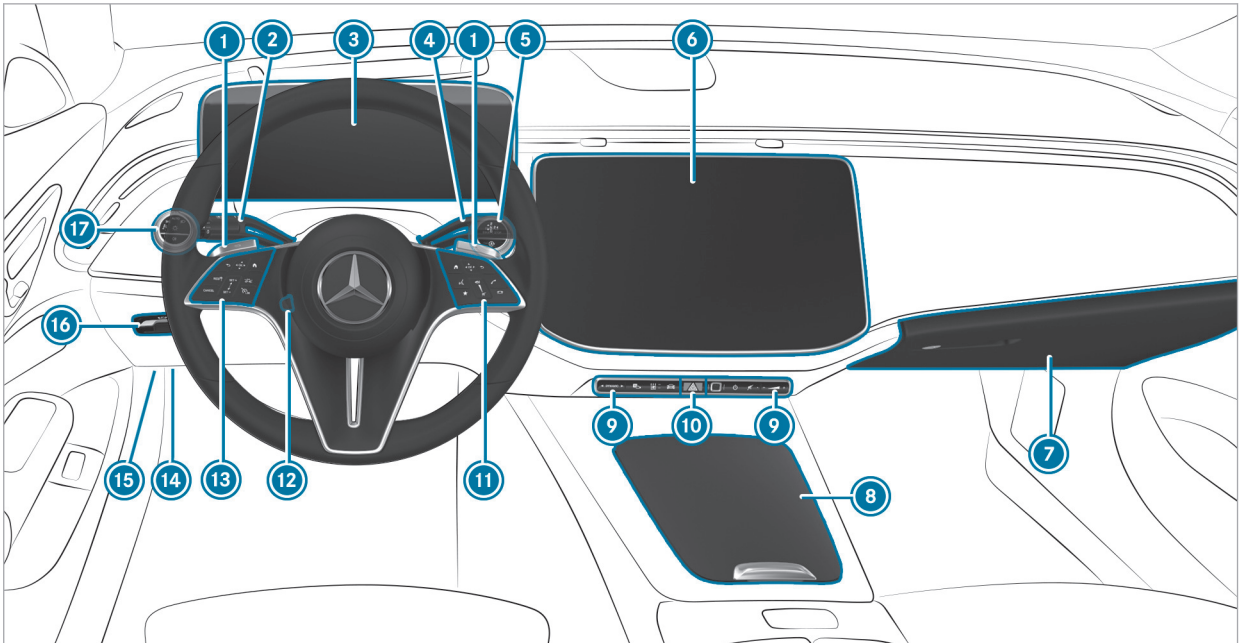

Left-hand drive vehicles

F214 0032 13

1 Steering wheel paddle shifters	→	255
2 Combination switch	→	200
3 Driver display	→	349
4 DIRECT SELECT lever	→	251
5 ENGINE START / STOP Start/stop button	→	234
Ⓐ ECO start/stop function	→	246
6 Central display	→	367
7 Glove box	→	39
8 Storage compartment	→	39
9 Switch panel for:		
DYNAMIC DYNAMIC SELECT button	→	249
Active Parking Assist	→	331
Quick vehicle access		
Switches the MBUX multimedia system on/off	→	367
Switches sound on/off	→	385
Adjusts the volume	→	386
10 Hazard warning light system	→	47
11 Control panel for the MBUX multimedia system	→	377
12 Adjusts the steering wheel	→	175
13 Control panel:		
Driver display	→	349
Cruise control	→	283
Active Distance Assist DISTRONIC	→	287
14 Diagnostics connection	→	86
15 Opens the hood	→	506
16 Electric parking brake	→	268
17 Light switch	→	199

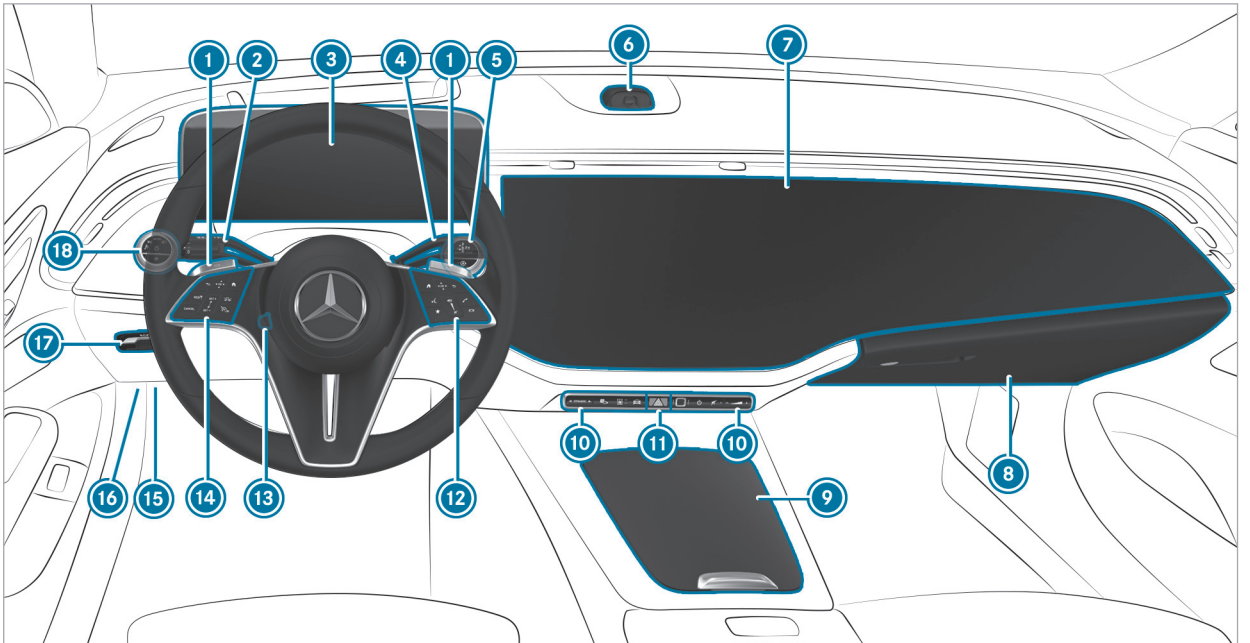

Left-hand drive vehicles

F214 0032 13

1	Steering wheel paddle shifters	→ 255
2	Combination switch	→ 200
3	Driver display	→ 349
4	DIRECT SELECT lever	→ 251
5	ENGINE START / STOP Start/stop button	→ 234
	ECO start/stop function	→ 246
6	Selfie and video camera	
7	MBUX hyperscreen with:	
	Central display	
	Front passenger display	
8	Glove box	→ 39
9	Storage compartment	→ 39
10	Switch panel for:	
	DYNAMIC SELECT button	→ 249
	Active Parking Assist	→ 331
	Quick vehicle access	
	Switches the MBUX multimedia system on/off	→ 367
	Switches sound on/off	→ 385
	Adjusts the volume	→ 386
11	Hazard warning light system	→ 47
12	Control panel for the MBUX multimedia system	→ 377
13	Adjusts the steering wheel	→ 175
14	Control panel:	
	Driver display	→ 349
	Cruise control	→ 283
	Active Distance Assist DISTRONIC	→ 287
15	Diagnostics connection	→ 86
16	Opens the hood	→ 506
17	Electric parking brake	→ 268
18	Light switch	→ 199

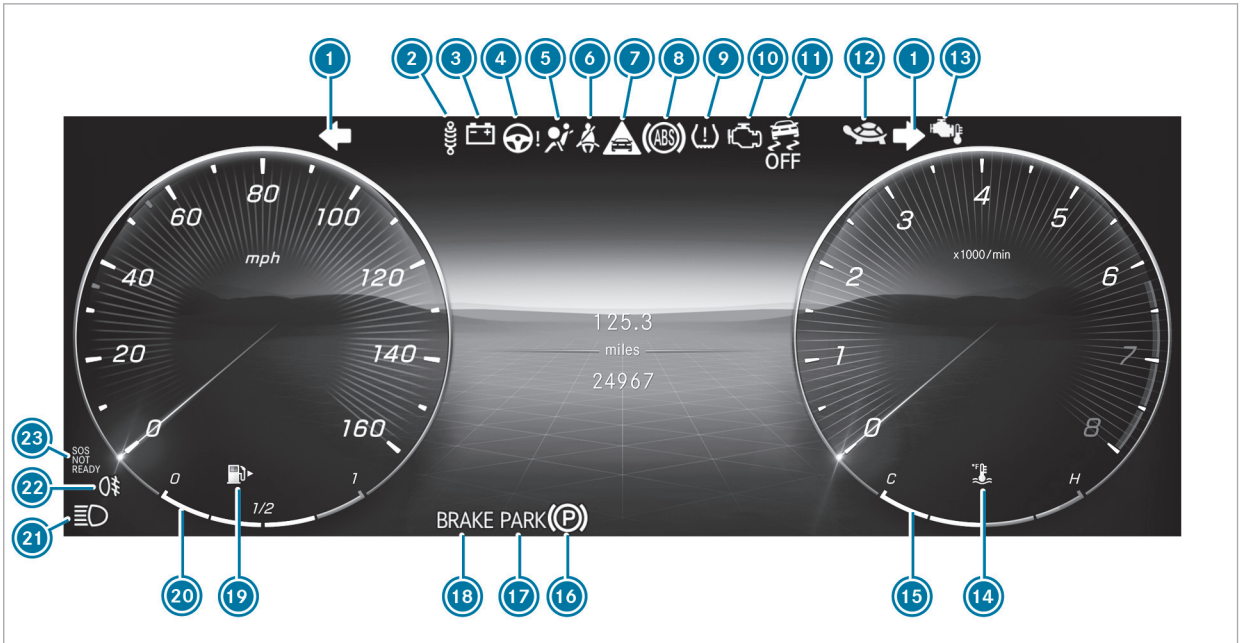

Standard driver display

F214 0032 13

1	Turn signal lights	→	200
2	Suspension (red)	→	791
	Suspension (yellow)	→	791
3	Electrical malfunction	→	784
4	Power steering (red)	→	782
	Power steering (yellow)	→	782
	Rear axle steering (red)	→	782
	Rear axle steering (yellow)	→	782
5	Restraint system	→	780
6	Seat belt	→	780
7	Distance warning	→	791
8	ABS	→	791
9	Tire pressure monitoring system	→	796
10	Engine diagnosis	→	784
11	ESP® OFF	→	791
	ESP®	→	791
12	Drive system: reduced power	→	782
13	Gasoline engine: reduced power	→	250
14	Coolant temperature	→	784
15	Coolant temperature display	→	351
16	Electric parking brake (yellow)	→	788
17	Electric parking brake (red)	→	788
	PARK USA only		
	Canada only		
18	Brakes (red)	→	788
	BRAKE USA only		
	Canada only		
	RBS Recuperative Brake System, USA only	→	788
	Brakes (yellow), Canada only	→	788
19	Reserve fuel with fuel filler flap location indicator	→	784
20	Fuel level	→	351
21	High beam	→	200

Low beam	→	199	
Standing lights	→	199	
22 Rear fog light	→	200	
23 SOS NOT READY Mercedes-Benz emergency call system	→	796	

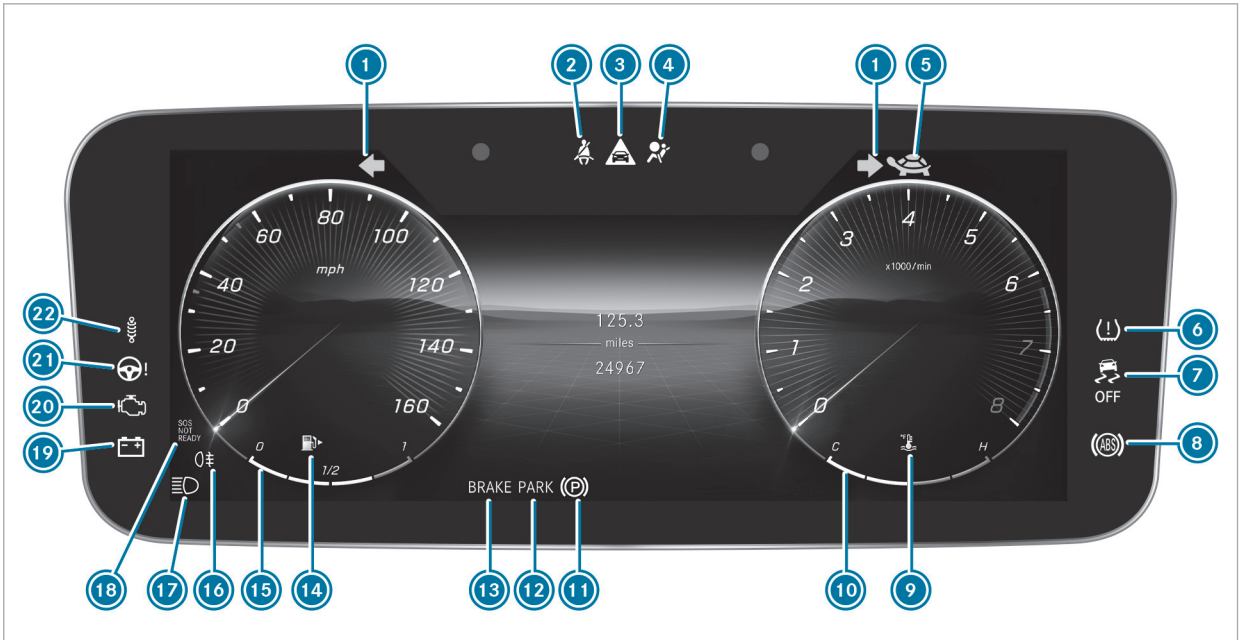

Driver display with driver camera

F214 0032 13

1	Turn signal lights	→ 200
2	Seat belt	→ 780
3	Distance warning	→ 791
4	Restraint system	→ 780
5	Drive system: reduced power	→ 782
6	Tire pressure monitoring system	→ 796
7	ESP® OFF	→ 791
	ESP®	→ 791
8	ABS	→ 791
9	Coolant temperature	→ 784
10	Coolant temperature display	→ 351
11	Electric parking brake (yellow)	→ 788
12	Electric parking brake (red)	→ 788
	PARK USA only	
	Canada only	
13	Brakes (red)	→ 788
	BRAKE USA only	
	Canada only	
	RBS Recuperative Brake System, USA only	→ 788
	Brakes (yellow), Canada only	→ 788
14	Reserve fuel with fuel filler flap location indicator	→ 784
15	Fuel level	→ 351
16	Rear fog light	→ 200
17	High beam	→ 200
	Low beam	→ 199
	Standing lights	→ 199
18	Mercedes-Benz emergency call system	→ 796
19	Electrical malfunction	→ 784
20	Engine diagnosis	→ 784
21	Power steering (red)	→ 782
	Power steering (yellow)	→ 782
	Rear axle steering (red)	→ 782

	Rear axle steering (yellow)	→	782
22	Suspension (red)	→	791
	Suspension (yellow)	→	791

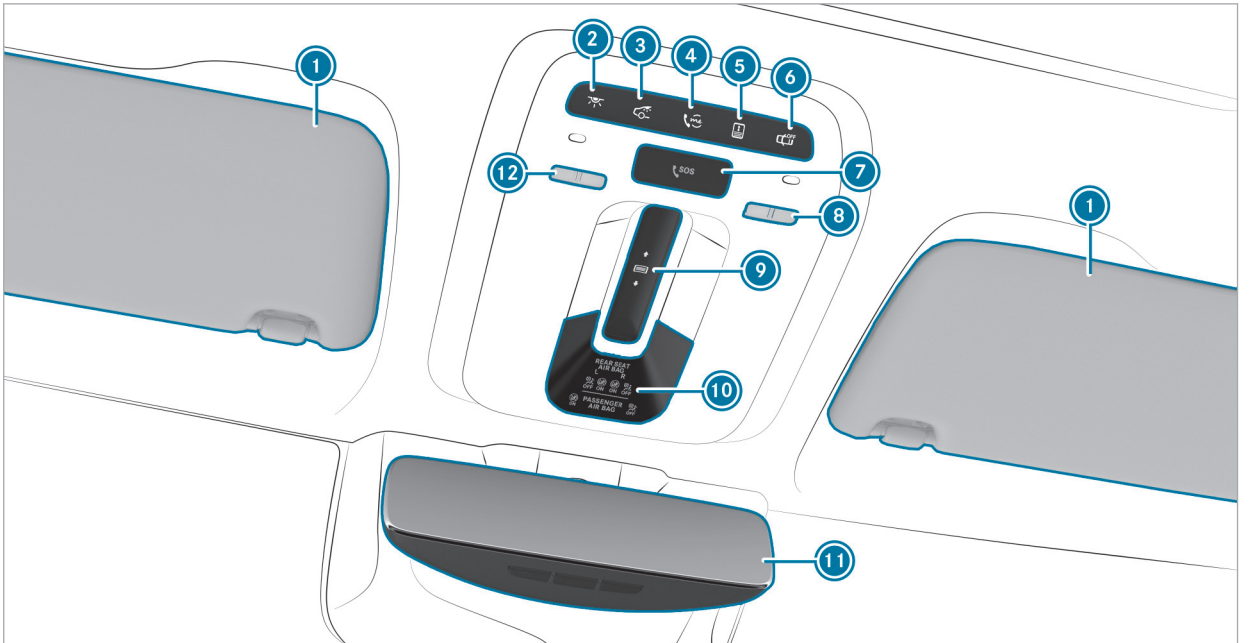

F214 0032 13

1	Sun visors		
2	Switches the front interior lighting on/off	→	210
3	Switches the rear interior lighting on/off	→	210
4	me button	→	469
5	Opens/closes the rear roller sunblind for the panorama roof with power tilt/sliding panel	→	153
6	Switches automatic interior lighting control on/off	→	210
7	SOS button	→	469
8	Switches the right-hand reading lamp on/off	→	210
9	Opens/closes the panorama roof with power tilt/sliding panel	→	153
	Opens/closes the front roller sunblind for the panorama roof with power tilt/sliding panel	→	153
10	Indicator lamps:		
	PASSENGER AIR BAG	→	100
11	Inside rear-view mirror	→	217
12	Switches the left-hand reading lamp on/off	→	210

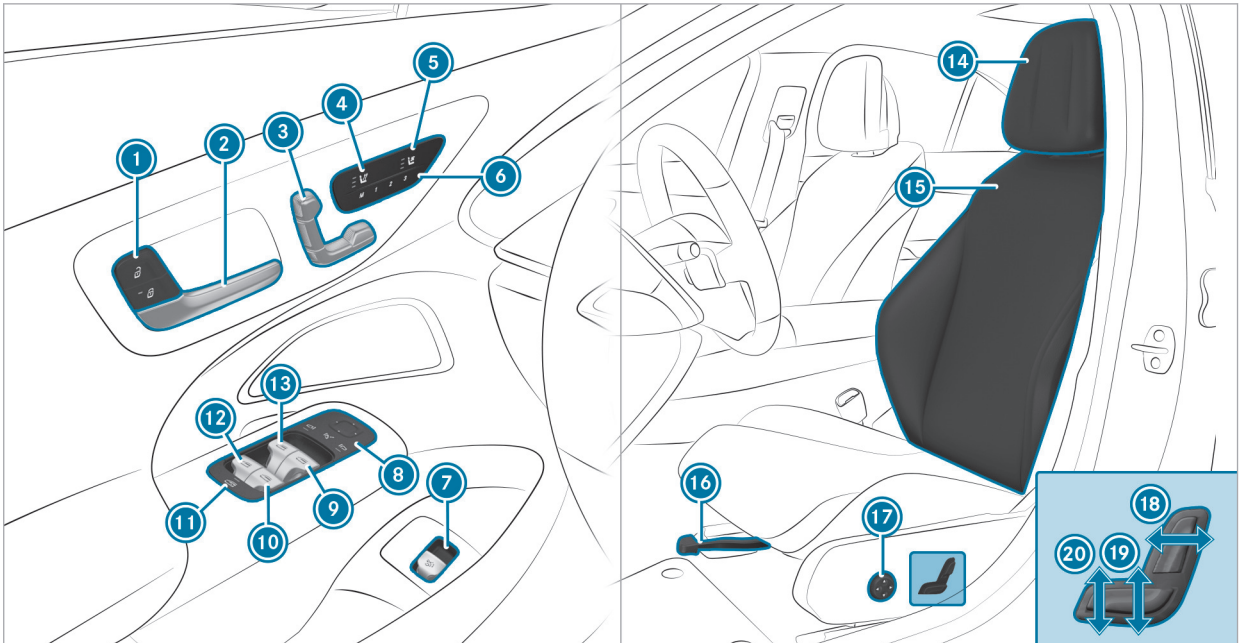

F214 0032 13

1	Locks/unlocks the vehicle	→ 138
2	Opens the door	→ 137
3	Adjusts the seats electrically	→ 165
4	Switches the seat heating on/off	→ 172
5	Switches the seat ventilation on/off	→ 173
6	M Operates the memory function	→ 178
7	Opens/closes the trunk lid	→ 144
8	Operates the outside mirrors	→ 216
9	Opens/closes the right side window	→ 150
10	Opens/closes the rear right side window	→ 150
11	Child safety lock for the rear side windows	→ 125
12	Opens/closes the rear left side window	→ 150
13	Opens/closes the left side window	→ 150
14	Adjusts the head restraints	→ 168
15	Seat adjustment using the multimedia system	→ 170
16	Adjusts the seat fore-and-aft position	→ 163
17	Adjusts the 4-way lumbar support	→ 167
18	Adjusts the seat backrest inclination	→ 163
19	Adjusts the seat height	→ 163
20	Adjusts the seat cushion inclination	→ 163

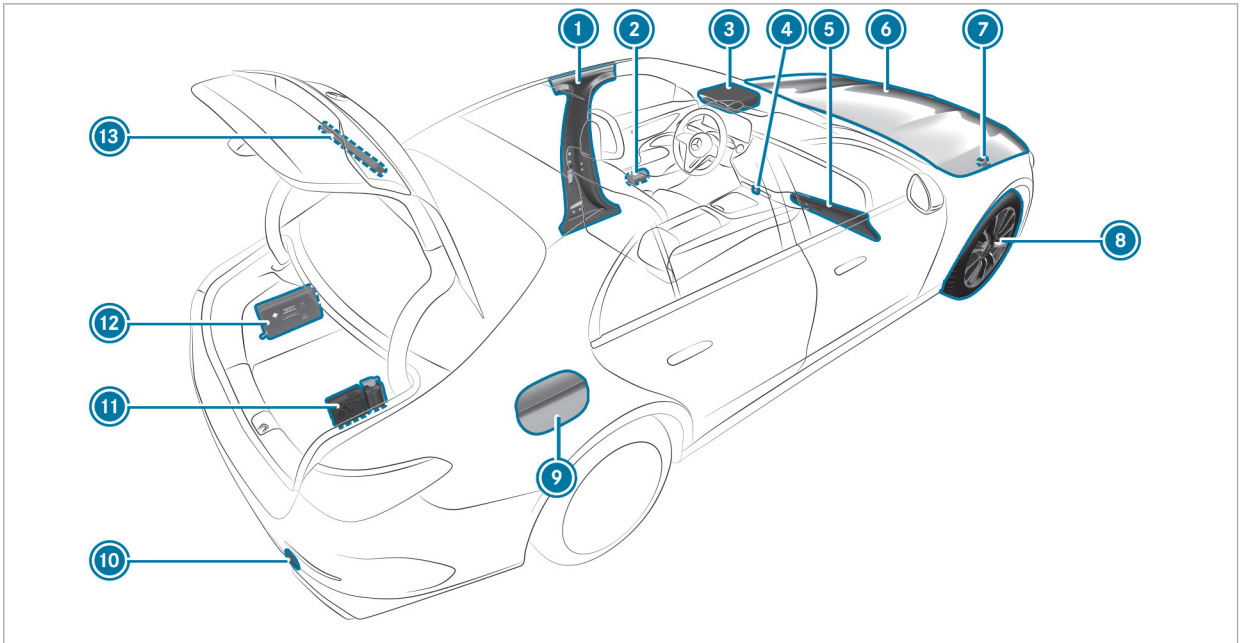

F214 0032 13

1	B-pillar with:		
	QR code for accessing the rescue card	→	49
2	Safety vests	→	29
3	me button	→	469
	SOS SOS button	→	469
4	Hazard warning light system	→	47
5	Stowage compartment for customer literature		
6	Checking and topping up operating fluids	→	691
	Starting assistance	→	49
7	Tow-starting or towing away	→	53
8	Flat tire	→	51
9	Fuel filler flap with:		
	information label on fuel type	→	20
	information label on tire pressure	→	548
	QR code for accessing the rescue card	→	49
10	Tow-starting or towing away	→	53
11	TIREFIT kit	→	524
12	First-aid kit (soft sided)	→	31
13	Warning triangle	→	31

Calling up the Digital Operator's Manual

Multimedia system:

→ ⌂ ▸▸ Settings ▸▸ Info ▸▸ Operator's Manual ▸▸ Open Digital Operator's Manual

The Digital Operator's Manual describes the functions and operation of the vehicle and multimedia system.

▶ Select one of the following menu items in the Digital Operator's Manual:

- Quick start: find the first steps towards adjusting your seat (driver's side).
- Tips: find information that prepares you for certain everyday situations with your vehicle.
- Animations: watch animations of the vehicle functions.
- Messages: receive additional information about the messages in the driver's display.
- Language: select the language for the Digital Operator's Manual.

You can search for keywords using the search field Search, in order to find quick answers to questions about the operation of the vehicle.

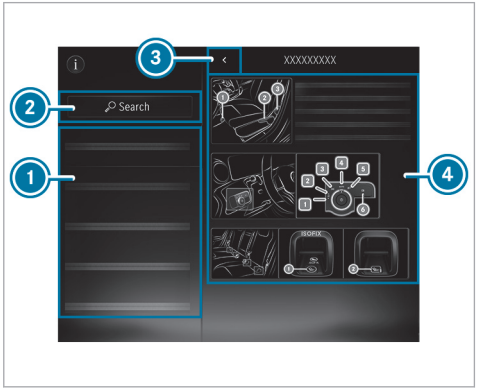

1 Menu
2 Search
3 Back
4 Contents section

Some sections in the Digital Operator's Manual, such as warning notes, can be expanded and collapsed.

Additional methods of calling up the Digital Operator's Manual:

Driver's display: call up brief information as display messages in the driver's display

MBUX Voice Assistant: call up via the voice control system

For safety reasons, the Digital Operator's Manual is deactivated while the vehicle is in motion.

Protecting the environment

ENVIRONMENTAL NOTE Environmental damage due to operating conditions and personal driving style

The pollutant emission of the vehicle is directly related to the way you operate the vehicle.

Operate your vehicle in an environmentally responsible manner to help protect the environment. Please observe the following recommendations on operating conditions and personal driving style.

Operating conditions:

- Make sure that the tire pressure is correct.
- Do not carry any unnecessary weight (e.g. roof luggage racks once you no longer need them).
- Adhere to the service intervals. A regularly serviced vehicle will contribute to environmental protection.
- Always have maintenance work carried out at a qualified specialist workshop.

Personal driving style:

- Do not depress the accelerator pedal when starting the engine.
- Do not warm up the vehicle while stationary.
- Drive carefully and maintain a suitable distance from the vehicle in front.
- Avoid frequent, sudden acceleration and braking.
- Change gear in good time and use each gear only up to ⅔ of its maximum engine speed.
- Switch off the vehicle in stationary traffic, e.g. by using the ECO start/stop function.
- Drive in a fuel-efficient manner. Observe the ECO display for an economical driving style.

Environmental issues and recommendations:
It is recommended that you re-use or recycle materials instead of just disposing of them.

The relevant environmental guidelines and regulations serve to protect the environment and must be strictly observed.

Mercedes-Benz Genuine Parts

ENVIRONMENTAL NOTE Environmental damage due to not using recycled reconditioned components

Mercedes-Benz AG offers recycled reconditioned components and parts with the same quality as new parts. The same entitlement from the Limited Warranty is valid as for new parts.

- Use recycled reconditioned components and parts from Mercedes-Benz AG.

! **NOTE** Impairment of the operating efficiency of the restraint systems from installing accessory parts or from repairs or welding

Air bags and Emergency Tensioning Devices, as well as control units and sensors for the restraint systems, may be installed in the following areas of your vehicle:

- doors
- door pillars
- sill
- seats
- cockpit
- driver's display
- center console
- lateral roof frame

▶ Do not install accessory parts such as audio systems in these areas.

▶ Do not carry out repairs or welding.

▶ Have accessories retrofitted at a qualified specialist workshop.

You could jeopardize the operating safety of your vehicle if you use parts, tires and wheels as well as accessories relevant to safety that have not been approved by Mercedes-Benz. Safety-critical systems (e.g. the brake system) may malfunction. Use only Mercedes-Benz Genuine Parts or parts of equal quality. Use only tires, wheels and accessory parts that have been specifically approved for your vehicle model.

Mercedes-Benz Genuine Parts are subject to strict quality inspections. Each part has been specially developed, manufactured or selected for Mercedes-Benz vehicles and adapted to them. Therefore, only Mercedes-Benz Genuine Parts should be used.

More than 300,000 different Mercedes-Benz Genuine Parts are available for Mercedes-Benz models.

All authorized Mercedes-Benz Service Centers maintain a supply of Mercedes-Benz Genuine Parts for necessary service and repair work. In addition, strategically located parts delivery centers provide for quick and reliable parts service.

Always specify the vehicle identification number (VIN) (→ page 690) when ordering Mercedes-Benz Genuine Parts.

Touch-sensitive controls

In addition to conventional switches and buttons, your vehicle is equipped with touch-sensitive controls.

These are located in the following areas of your vehicle:

- Roof and door control panel
- Climate control
- Steering wheel
- MBUX multimedia system

The controls have touch-sensitive user interface surfaces. You can control these surfaces by pressing or swiping to adjust settings or to trigger functions, for example.

The touch-sensitive user interface on the central display also provides haptic feedback in the form of pulses, vibrations or changes in the surface structure, for example.

The haptic feedback from the user interface of the central display is produced using ultrasound.

When using the haptic controls on the central display, ensure that there is sufficient distance between the head and the display surface during operation.

You will receive haptic feedback in the following situations, for example:

- When you interact with controls on the display surface
- When scrolling in a list or table
- When you reach a new area on the display surface, e.g. a pop-up window, controls, icons

Despite careful development, Mercedes-Benz AG cannot completely rule out the possibility of external microphones interfering with the haptic controls.

If you have any questions, contact a qualified specialist workshop.

When using touch-sensitive user interfaces, note the following points to avoid problems:

- Do not affix stickers or similar objects to the surfaces.
- Do not attach smartphone holders or other mountings to the surface of the central display.
- Keep the surfaces protected from moisture and wet conditions.
- Keep the surfaces free of dust and dirt (→ page 517).

Some touch-sensitive controls have both a symbol and integrated indicator lamps. Be sure to press on the symbol of the control element when using it.

Mercedes me app

Notes about the on-demand feature

You can also activate various functions (on-demand feature) subsequently via Mercedes me after purchasing your vehicle.

Information is available at any authorized Mercedes-Benz Service Center.

Activating on-demand feature using Mercedes me

Requirements

- The vehicle has a wireless connection.
- The vehicle is linked to the Mercedes me user account.

Ordering and activating on-demand feature

▶ Add the desired on-demand feature for the vehicle to the shopping basket in the Mercedes me Store.

▶ Complete the order.
The on-demand feature is activated when operating the vehicle.

Speeding up activation

▶ Switch the vehicle off and lock it.

▶ Unlock the vehicle after about two minutes and switch on the vehicle.
The on-demand feature has been activated. For some features, a notification also appears in the vehicle's multimedia system.

If the activation was not successful, repeat the process.

Service and vehicle operation

Vehicle operation outside the USA or Canada

When you are abroad with your vehicle, observe the following points:

- service points or replacement parts may not be available immediately.
- unleaded fuel may not be available for vehicles with a catalytic converter. Leaded fuel may cause damage to the catalytic converter.
- the fuel may have an extremely low octane number. Unsuitable fuel can cause engine damage.

Some Mercedes-Benz models are available in Europe through our European Delivery Program. For more information, please consult an authorized Mercedes-Benz Service Center, or write to one of the following addresses:

in the USA:

Mercedes-Benz USA, LLC

European Delivery Department

One Mercedes-Benz Drive

Sandy Springs, GA 30328

in Canada:

Mercedes-Benz Canada, Inc.

European Delivery Department

98 Vanderhoof Avenue

Toronto, Ontario M4G 4C9

Maintenance

Your customer advisor confirms the service in the service report.

Roadside Assistance

The Mercedes-Benz Roadside Assistance Program offers technical help in the case of a breakdown. Your calls to the toll-free Roadside Assistance Hotline are answered by our agents 24 hours a day, 365 days a year.

1-800-FOR-MERCedes (1-800-367-6372) (USA)

1-800-387-0100 (Canada)

You can find further information in the Mercedes-Benz Roadside Assistance Program brochure (USA) or the "Roadside Assistance" section in the Service and Warranty booklet (Canada). You will find both in the vehicle document wallet.

Change of address or change of ownership

In the event of a change of address, please send us the "Notification of address change" in the Service and Guarantee booklet or simply call the Mercedes-Benz Customer Assistance Center (USA) on the hotline number 1-800-FOR-MERCedes (1-800-367-6372) or Customer Service (Canada) on 1-800-387-0100. We can then reach you in a timely fashion, if necessary.

If you sell your Mercedes, please leave all literature in the vehicle so that it is available to the next owner. If you have purchased a used vehicle, please send us the "Notice of Purchase of Used Car" in the Service and Guarantee booklet or simply call the Mercedes-Benz Customer Assistance Center (USA) at the hotline number 1-800-FOR-MERCedes (1-800-367-6372) or Customer Service (Canada) at 1-800-387-0100.

Possible danger due to substances hazardous to health

In compliance with Proposition 65 (“Prop65”), the following detachable label has been added to each vehicle sold in California:



Operating safety

WARNING Risk of accident due to malfunctions or system failures

If you do not have the prescribed service/maintenance work or any required repairs carried out, this could result in malfunctions or system failures.

- Always have the prescribed service and maintenance work or any required repairs carried out in a qualified specialist workshop.

WARNING Risk of accident or injury due to incorrect modifications on electronic component parts

Modification of electronic components, their software or wiring could impair their function and/or the function of other networked component parts or safety-relevant systems.

This can endanger the operating safety of the vehicle.

- Never tamper with the wiring and electronic component parts or their software.
- You should have all work on electrical and electronic components carried out at a qualified specialist workshop.

Observe the "On-board electronics" section in "Technical data".

WARNING Risk of fire caused by flammable material on hot exhaust system components

Flammable material such as leaves, grass or twigs may ignite if they come into contact with hot parts of the exhaust system.

- When driving on an unpaved road or off-road, check the vehicle underside regularly.
- In particular, remove trapped plant parts or other flammable material.
- If there is damage, consult a qualified specialist workshop immediately.

NOTE Damage to the vehicle due to driving too fast and due to impacts to the vehicle underbody or suspension components

In the following situations, in particular, there is a risk of damage to the vehicle:

- The vehicle becomes grounded, e.g. on a high curb or an unpaved road
- The vehicle is driven too fast over an obstacle, e.g. a curb, speed bump or pothole
- A heavy object strikes the underbody or suspension components

In situations such as these, damage to the body, underbody, suspension components, wheels or tires may not be visible. Components damaged in this way can unexpectedly fail or, in the case of an accident, may no longer absorb the resulting force as intended.

If the underbody paneling is damaged, flammable materials such as leaves, grass or twigs can collect between the underbody and the underbody paneling. These materials may ignite if they come into contact with hot parts of the exhaust system.

- Have the vehicle checked and repaired immediately at a qualified specialist workshop.

or

- If driving safety is impaired while continuing your journey, pull over and stop the vehicle immediately, while paying attention to road and traffic conditions, and contact a qualified specialist workshop.

Vehicles with a 48 V on-board electrical system

DANGER Risk of fatal injury by touching damaged high-voltage components

Vehicles with a 48 V on-board electrical system contain individual high-voltage components. These high-voltage components are under high voltage.

If you modify component parts of these high-voltage components or touch damaged component parts, you may be electrocuted.

High voltage components may be damaged in an accident, although the damage may not be visible.

- Never perform modifications to component parts of high-voltage components.
- Never touch damaged component parts of high-voltage components.
- Never touch component parts of high-voltage components after an accident.

Vehicles with a 48 V on-board electrical system contain high-voltage components. These components are marked with a high-voltage label:

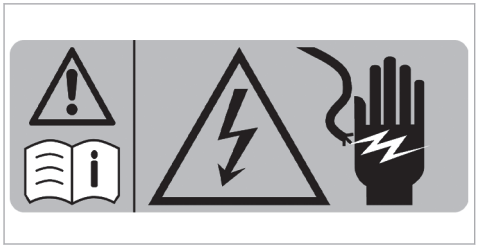

Example

All work on high-voltage components must be carried out at a qualified specialist workshop.

Fitting the license plate to the front license plate holder

NOTE Malfunctions and system failures due to incorrect mounting of the license plate on the front license plate holder

If the license plate is incorrectly mounted on the front license plate holder, sensors, cameras or driving and safety systems may malfunction or fail.

Observe the following points when mounting the license plate on the front license plate holder:

- Mount the license plate directly on the license plate holder without advertising media or other holders.
- Mount the license plate so that it does not protrude above or to the side of the license plate adapter.

National information for components relevant to radio regulation

Information on crossing national borders

You must observe the radio regulations for the country in which you are currently operating your vehicle.

Wireless vehicle components

USA: "Radio based devices of this vehicle comply with Part 15 of the FCC Rules. Operation is subject to the following two conditions: 1) These devices may not cause harmful interference, and 2) These devices must accept any interference received, including interference that may cause undesired operation.Changes or modifications not expressly approved by the party responsible for compliance could void the user's authority to operate the equipment."

Canada: "This vehicle contains licence-exempt transmitter(s)/receiver(s) that comply with Innovation, Science and Economic Development Canada's licence-exempt RSS(s). Operation is subject to the following two conditions: (1) These devices may not cause interference. (2) These devices must accept any interference, including interference that may cause undesired operation of the devices." "Les émetteurs/récepteurs dans cette véhicule sont conforme aux CNR d'Innovation, Sciences et Développement économique Canada applicables aux appareils radio exempts de licence. L'exploitation est autorisée aux deux conditions suivantes : 1) Ces appareils ne doivent pas produire de brouillage; 2) Ces appareils doivent

accepter tout brouillage radioélectrique subi, même si le brouillage est susceptible d'en compromettre le fonctionnement."

Diagnostics connection

The diagnostics connection is a technical interface in the vehicle. It is used, for example, during repair and maintenance work or for reading out vehicle data in a specialist workshop. Diagnostic devices should therefore only be connected in a qualified specialist workshop.

WARNING Risk of accident due to connecting devices to the diagnostics connection

If you connect devices to the diagnostics connection of the vehicle, the function of vehicle systems and operating safety may be impaired.

- For safety reasons, we recommend that you use and connect only products approved by an authorized Mercedes-Benz Service Center.

WARNING Risk of accident due to objects in the driver's footwell

Objects in the driver's footwell may impede pedal travel or block a depressed pedal.

This jeopardizes the operating and road safety of the vehicle.

- Stow all objects in the vehicle securely so that they cannot get into the driver's footwell.
- Always install the floor mats securely and as prescribed in order to ensure that there is always sufficient room for the pedals.
- Do not use loose floor mats and do not place floor mats on top of one another.

NOTE Battery discharging from using devices connected to the diagnostics connection

Using devices at the diagnostics connection drains the battery.

- Check the charge level of the battery.
- If the charge level is low, charge the battery, e.g. by driving a considerable distance.

Please also note the information about the 12 V battery and short-distance trips in the "Driving and Parking" chapter (→ page 241).

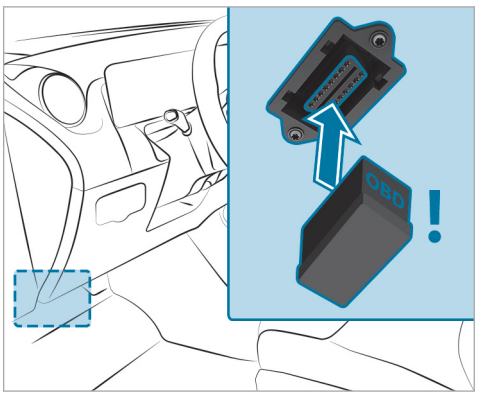

Connecting and using another device with the diagnostics connection can have the following effects:

- Malfunctions in the vehicle system
- Permanent damage to vehicle components

Please refer to the warranty terms and conditions for this matter.

Moreover, connecting equipment to the diagnostics connection can lead to emissions monitoring information being reset, for example. This may lead to the vehicle failing to meet the requirements of the next emissions inspection during the main inspection.

Qualified specialist workshop

An authorized Mercedes-Benz Service Center is a qualified specialist workshop. It has the necessary special skills, tools and qualifications to correctly carry out the work required on your vehicle. This particularly applies to safety-relevant work.

For the following, always have your vehicle checked at an authorized Mercedes-Benz Service Center:

- Safety-relevant work
- Service and maintenance work
- Repair work
- Modifications as well as installations and conversions
- Work on electronic components
- **Vehicles with 48 V on-board electrical system:** work on the high-voltage component of the 48 V on-board electrical system

Mercedes-Benz recommends a Mercedes-Benz Service Center.

Correct use of the vehicle

If you remove any warning stickers, you or others could fail to recognize certain dangers. Leave warning stickers in position.

Observe the following information in particular when driving your vehicle:

- the safety notes in this Operator's Manual, vehicle-specific supplements and further supplementary documents
- technical data for the vehicle
- traffic laws and regulations of the country you are currently driving in
- laws pertaining to motor vehicles and safety standards of the country you are currently driving in
- radio regulatory requirements of the country you are currently driving in

Notes for persons with electronic medical aids

Mercedes-Benz AG cannot, despite carefully developing vehicle systems, completely rule out the interaction of vehicle systems with electronic medical aids such as cardiac pacemakers.

In addition, there are components installed in the vehicle that, regardless of the operating status of the vehicle, can generate magnetic fields on a par with permanent magnets. These fields can be

found, for example, in the area around the multimedia and sound system or also in the area of the seats, depending on the vehicle equipment.

For this reason, the following can occur in isolated cases, depending on the aids used:

- Medical aids malfunctioning
- Adverse health effects

Observe the notes and warnings of the manufacturer of the medical aids; if in doubt, contact the device manufacturer and/or your doctor. If there is continuing uncertainty concerning the possibility of medical aids malfunctioning, Mercedes-Benz AG recommends using only few electrical vehicle systems and/or maintaining a distance from the components.

Only have repairs and maintenance work in the area of the following components carried out at a qualified specialist workshop:

- Vehicle components carrying live voltage
- Transmission antenna
- Multimedia system and sound system

If you have any queries or suggestions, consult a qualified specialist workshop.

Problems with your vehicle

If you should experience a problem with your vehicle, particularly one that you believe may affect its safe operation, we urge you to contact an authorized Mercedes-Benz Center immediately to have the problem diagnosed and rectified. If the problem is not resolved to your satisfaction, please discuss the problem again with an authorized Mercedes-Benz Center or, if necessary, contact us at one of the following addresses:

In the USA:

Mercedes-Benz USA, LLC

Customer Assistance Center

One Mercedes-Benz Drive

Sandy Springs, GA 30328

In Canada:

Mercedes-Benz Canada, Inc.

Customer Relations Department

98 Vanderhoof Avenue

Toronto, Ontario M4G 4C9

Reporting safety defects

USA only:

The following text is published as required of manufacturers under Title 49, Code of U.S. Federal Regulations, Part 575 pursuant to the “National Traffic and Motor Vehicle Safety Act of 1966”.

If you believe that your vehicle has a defect which could cause a crash or could cause injury or death, you should immediately inform the National Highway Traffic Safety Administration (NHTSA) in addition to notifying Mercedes-Benz USA, LLC.

If NHTSA receives similar complaints, it may open an investigation, and if it finds that a safety defect exists in a group of vehicles, it may order a recall and remedy campaign. However, NHTSA cannot become involved in individual problems between you, your dealer, or Mercedes-Benz USA, LLC.

To contact NHTSA, you may call the Vehicle Safety Hotline toll-free at 1-888-327-4236 (TTY: 1-800-424-9153) ; go to https://www.safercar.gov; or write to: Administrator, NHTSA, 400

Seventh Street, SW., Washington, DC 20590, USA.

You can also obtain other information about motor vehicle safety from https://www.safercar.gov.

Canada only:
The following text is published as required of manufacturers under subsection 18.4 (4) of the Motor Vehicle Safety Regulations.

If you believe that your vehicle has a defect which could cause a crash or could cause injury or death, you should immediately inform Transport Canada in addition to notifying Mercedes-Benz Canada Inc.

If Transport Canada received similar complaints, it may open an investigation, and if it finds that a safety defect exists in a group of vehicles, it may order a recall and remedy campaign. However, Transport Canada cannot become involved in individual problems between you, your dealer, or Mercedes-Benz Canada Inc.

To contact Transport Canada, you may call the Defect Investigations and Recalls Division toll-free in Canada at 1-800-333-0510 or 819-994-3328 in the Gatineau-Ottawa area or internationally; may also go to the following websites for more information:

- English: https://www.tc.gc.ca/recalls
- French: https://www.tc.gc.ca/rappels

Limited Warranty

NOTE Damage to the vehicle arising from violation of these operating instructions.

Damage to the vehicle can arise from violation of these operating instructions.

This damage is not covered either by the Mercedes-Benz implied warranty or by the New- or Used-Vehicle Warranty.

▶ Follow the instructions in these operating instructions on proper operation of your vehicle as well as on possible vehicle damage.

QR code for rescue card

QR codes are attached in the fuel filler flap and on the opposite side on the B-pillar. In the event of an accident, rescue services can use the QR code to quickly find the appropriate rescue card for your vehicle. The current rescue card contains the most important information about your vehicle (e.g. the routing of the electric lines) in compact form.

Further information can be obtained at https://www.mercedes-benz.de/qr-code

Data storage

Data processing in the vehicle

Electronic control units
There are electronic control units installed in your vehicle. Control units process data that they e.g. receive from vehicle sensors, generate themselves or exchange among themselves. Some control units are required for the safe operation of your vehicle. For example, some assist you when you are driving, such as driver assistance systems, while others enable convenience or infotainment functions.

The following provides you with general information regarding data processing in the vehicle.

Additional information on what specific data is collected, stored and transmitted to third parties for what purpose in your vehicle can be found in the notes on the functional features in question in the respective operating instructions. These are also available online and, depending on the equipment, digitally in the vehicle.

Personal data

Each vehicle is marked with a unique vehicle identification number. Depending on the country, this vehicle identification number can be used by, for example, government authorities to determine the identity of the owner. There are other possibilities for using data collected from the vehicle to identify the owner or driver, such as the license plate number.

The data generated or processed by control units may therefore be personal or, in certain circumstances, become personal. Depending on which vehicle data are available, it may be possible to make inferences about, for example, your driving behavior, your location, your route or your use patterns.

Legal requirements for the disclosure of data

If legal regulations exist, manufacturers are generally obligated to release data stored by the manufacturer to the necessary extent in individual cases at the request of state authorities. This may be the case during the investigation of a criminal offense, for example.

Within the framework of applicable law, state authorities are also authorized to take data readouts from vehicles themselves in specific cases. In the event of an accident, for example, information readouts can be taken from the air bag control unit to help to establish what happened.

Operating data in the vehicle

Control units process data to operate the vehicle.

This includes the following data, for example:

- Vehicle status information such as speed, longitudinal acceleration, lateral acceleration, number of wheel revolutions or the fastened seat belts indicator
- Ambient conditions, such as temperature, rain sensor or distance sensor

As a rule, this data is volatile, is not stored beyond the operating time and is processed only in the vehicle itself. Control units (e.g. the vehicle key) often contain data memories. These are used to temporarily or permanently document information about the vehicle's operating state, component stress, maintenance requirements or technical events and malfunctions.

Depending on the technical equipment, the following data will be stored:

- Operating status of system components (e.g. fill levels, tire pressure, battery status)
- Malfunctions or faults in important system components (e.g. lights, brakes)
- System reactions in special driving situations (e.g. air bag deployment, the intervention of stability control systems
- Information on events leading to vehicle damage

In special cases, it may be necessary to store data that would otherwise only be volatile. This may be the case if the vehicle has detected a malfunction, for example.

If you use services such as repair services or maintenance work, stored operational data readouts can be taken and used together with the vehicle identification number, where necessary. Readouts can be taken by service network employees such as workshops and manufacturers, or third parties, such as breakdown services. The same is true in the case of warranty claims and quality assurance measures.

The readout will usually be taken via the diagnostics connection in the vehicle, which is required by law. The operating data readout taken documents technical conditions of the vehicle or individual components and helps to diagnose malfunctions, meet warranty obligations and improve quality. This data, particularly information on component stress, technical events, operating errors and other malfunctions, will be transmitted to the manufacturer for this purpose together with the vehicle identification number if necessary. In addition, the manufacturer is subject to product liability. For this reason, the manufacturer also uses operational data from the vehicle for e.g. recalls. This data can also be used to check customer claims for warranty and guarantee.

Fault memories in the vehicle can be reset by a service outlet or at your request as part of repair or maintenance work.

Comfort and infotainment functions

You can save comfort settings and individualization in the vehicle and change or reset them at any time.

Depending on the vehicle equipment, this includes the following settings, for example:

- Seat positions and steering wheel positions
- Suspension tuning and climate control settings
- Custom settings (e.g. interior lighting)

You can incorporate data into the vehicle's infotainment functions yourself as part of the selected equipment.

Depending on the vehicle equipment, this includes the following data, for example:

- Multimedia data (e.g. music, films or photos for playback in an integrated multimedia system)
- Address book data for use in conjunction with an integrated hands-free system or an integrated navigation system
- Navigation destinations that have been entered
- Data about the use of internet services

This data for comfort and infotainment functions can be saved locally in the vehicle or stored on a device that you have connected to the vehicle (e.g. smartphone, USB flash drive or MP3 player). If you have entered data yourself, you can delete it at any time.

The transfer of this data out of the vehicle will take place exclusively at your request. This applies in particular when you are using online services according to the settings you have selected.

Smartphone integration (e.g. Android Auto or Apple CarPlay®)

If your vehicle is equipped appropriately, you can connect your smartphone or another mobile device to the vehicle. You will then be able to control them using the controls integrated in the vehicle. The smartphone's picture and sound can be

output via the multimedia system. Specific items of information will also be transferred to your smartphone. Depending on the type of integration, this may include position data, day/night mode and other general vehicle statuses. Please refer to the vehicle Operator's Manual / infotainment system operating instructions for further information.

This integration allows the use of selected smartphone apps (e.g. navigation apps, music player apps). There will be no further interaction between your smartphone and the vehicle; in particular, vehicle data will not be directly accessible. The type of additional data processing is determined by the provider of the app being used. Whether you can configure settings for it and, if so, which ones, depend on the app and your smartphone's operating system.

Online services

Wireless network connection

If your vehicle has a wireless network connection, it enables data to be exchanged between your vehicle and additional systems. The wireless network connection is made possible by the vehicle's own transmitter and receiver or by a mobile end device that you have brought into the vehicle, for example, a smartphone. Online functions can be used via the wireless network connection. This includes online services and applications/apps provided to you by the manufacturer or by other providers.

Manufacturer's services

Regarding the manufacturer's online services, the individual functions are described by the manufacturer in a suitable place, for example, in the Operator's Manual or on the manufacturer's website, where the relevant data protection information is also given. Personal data may be used for the provision of online services. Data is exchanged via a secure connection, such as the manufacturer's designated IT systems. Any personal data which is collected, processed and used, other than for the provision of services, is done so exclusively on the basis of legal permission. This is the case, for example, for a legally prescribed emergency call system, a contractual agreement or when consent has been given.

You can have services and functions, some of which are subject to a fee, activated or deactivated. This excludes legally prescribed functions and services, such as an emergency call system.

Third-party services

If you use online services from other providers (third parties), these services are the responsibility of the provider in question and subject to that provider's data protection conditions and terms of use. As a general rule, the manufacturer has no influence on the content exchanged.

For this reason, when services are provided by third parties, please ask the service provider in question for information about the type, extent and purpose of the collection and use of personal data.

Data protection rights

Depending on your country or the equipment and range of functions of your vehicle as well as the services you use and the services on offer, you are entitled to different data protection rights. Further information on data protection and your data protection rights can either be found on the

manufacturer's website or you will receive this information as part of the various services and service offers. There you will also find the contact information for the manufacturer and its data protection officers.

At a workshop, for example, with the support of a specialist and possibly for a fee, you can have data read out which is stored only locally in the vehicle.

MBUX multimedia system/Mercedes me connect

If the vehicle is equipped with the MBUX multimedia system or Mercedes me connect, additional data about the vehicle's operation, the use of the vehicle in certain situations, and the location of the vehicle may be compiled by the MBUX multimedia system or Mercedes me connect.

For additional information, please refer to the "MBUX multimedia system" section and/or the Mercedes me connect Terms and Conditions.

Event data recorder

USA only:

This vehicle is equipped with an event data recorder (EDR). The main purpose of an EDR is to record, in certain crash or near crash-like situations, such as an air bag deployment or hitting a road obstacle, data that will assist in understanding how a vehicle's systems performed. The EDR is designed to record data related to vehicle dynamics and safety systems for a short period of time, typically 30 seconds or less.

The EDR in this vehicle is designed to record such data as:

- How various systems in your vehicle were operating;
- Whether or not the driver and passenger safety belts were buckled/fastened;
- How far (if at all) the driver was depressing the accelerator and/or brake pedal; and,
- How fast the vehicle was traveling.

These data can help provide a better understanding of the circumstances in which crashes and injuries occur. NOTE: EDR data are recorded by your vehicle only if a non-trivial crash situation occurs; no data are recorded by the EDR under normal driving conditions and no personal data (e.g., name, gender, age, and crash location) are recorded. However, other parties, such as law enforcement could combine the EDR data with the type of personally identifying data routinely acquired during a crash investigation.

To read data recorded by an EDR, special equipment is required, and access to the vehicle or the EDR is needed. In addition to the vehicle manufacturer, other parties, such as law enforcement, that have the special equipment, can read the information if they have access to the vehicle or the EDR.

EDR data may be used in civil and criminal matters as a tool in accident reconstruction, accident claims, and vehicle safety. Since the Crash Data Retrieval CDR tool that is used to extract data from the EDR is commercially available, Mercedes-Benz USA, LLC („MBUSA“) expressly disclaims any and all liability arising from the extraction of this information by unauthorized Mercedes-Benz personnel.

MBUSA will not share EDR data with others without the consent of the vehicle owners or, if the vehicle is leased, without the consent of the lessee. Exceptions to this representation include

responses to subpoenas by law enforcement; by federal, state or local government; in connection with or arising out of litigation involving MBUSA or its subsidiaries and affiliates; or, as required by law.

Warning: The EDR is a component of the Restraint System Module. Tampering with, altering, modifying or removing the EDR component may result in a malfunction of the Restraint System Module and other systems.

State laws or regulations regarding EDRs that conflict with federal regulation are pre\-empted. This means that in the event of such conflict, the federal regulation governs. As of Dec 2016, 17 states have enacted laws relating to EDRs.

Copyright

Free and open source software

Information on licenses for free and open-source software used in your vehicle can be found on the data carrier in your vehicle document wallet and with updates on the following website:

https://www.mercedes-benz.com/opensource

Registered trademarks

- Bluetooth® is a registered trademark of Bluetooth SIG, Inc.
- DTS™ is a registered trademark of DTS, Inc.
- Dolby® and MLP™ are registered trademarks of DOLBY Laboratories.
- ESP® and PRE-SAFE® are registered trademarks of Mercedes-Benz Group AG.
- HomeLink® is a registered trademark of Gentex Corporation.
- iPod® and iTunes® are registered trademarks of Apple Inc.
- Burmester® is a registered trademark of Burmester Audiosysteme GmbH.
- Microsoft® and Windows Media® are registered trademarks of Microsoft Corporation.
- SiriusXM® is a registered trademark of Sirius XM Radio Inc.
- HD Radio™ is a registered trademark of iBiquity Digital Corporation.
- Gracenote® is a registered trademark of Gracenote, Inc.
- ZAGAT Survey® and related brands are registered trademarks of Zagat Survey, LLC.

Brief overview of the most important points

Basic information

Make sure that the following prerequisites in particular have been met so that the components of the restraint system are able to provide the intended level of protection:

- Sit correctly (⟶ page 96).
- Fasten the seat belt correctly (⟶ page 97).
  - Function of the seat belt warning lamp (⟶ page 99).
  - Function of the rear seat belt status display (⟶ page 99).
- The restraint system warning lamp has gone out after the self-test (⟶ page 98).
- The PASSENGER AIR BAG indicator lamps display the correct status for the front passenger air bag (⟶ page 100).

Helping you to understand clearly

The "Occupant safety" chapter includes information on equipment, functions and behaviors that contribute directly to the safety of vehicle occupants.

The information is structured as follows:

- **Brief overview of the most important points:** this chapter provides an overview of the relationship between the restraint system and the correct behavior of all vehicle occupants.
- **Specific information:** in further sections of the "Occupant safety" chapter, you can find specific information on the equipment and functions of the restraint system.
- **Index:** you can also find certain topics in this Operator's Manual using the index.

The "Occupant safety" chapter does not provide information on topics including the following:

- Children in the vehicle (⟶ page 112)
- Driving and driving safety systems (⟶ page 272)
- Stowage areas (⟶ page 180)

Defining generic terms clearly

The following generic terms are used in this Operator's Manual:

- **Occupant safety:** comprises the components and system functions that help to minimize, as much as possible, the stresses and consequences for vehicle occupants caused by an accident.
- **Restraint system:** comprises those components that, along with the vehicle structure, help prevent vehicle occupants from potentially coming into contact with parts of the vehicle interior. The seat belts and air bags, for example, are components of the restraint system.
- **Child restraint system:** you can find all information on this topic in the chapter "Children in the vehicle" (⟶ page 112).

Be diligent

For the components of the restraint system to provide the intended level of protection, it is essential for your posture to be correct and for the seat belt to be fastened correctly.

Bear in mind that negligence when adopting your sitting position and fastening your seat belt may have serious consequences. Be diligent and make sure that all vehicle occupants are sitting correctly and have fastened their seat belts properly before starting every journey (⟶ page 96).

Information on the correct seat position

The seat position must be correct in order for the components of the restraint system to provide the intended level of protection.

The seat position influences both the protection provided by the seat belt and the additional protection provided by the air bag.

The correct seat position with an almost upright posture and a correctly fastened seat belt also reduce the risk posed by the air bag when it is deployed.

When choosing the seat, take note of the available space. When you are sitting with the right posture in a nearly upright position, your head should not touch the roof.

⚠ WARNING Risk of injury or death due to an incorrect seat position

If you deviate from the correct seat position, the air bag cannot provide its intended protective function.

Each vehicle occupant must make sure of the following.

- ▶ Put the seat in the correct position.
- ▶ Fasten seat belts correctly. Pregnant women must take particular care to ensure that the lap belt never lies across the abdomen.
- ▶ Observe the following information.

In order for the restraint system to provide the intended level of protection, observe the following information:

- Before starting your journey, adjust your seat correctly (→ page 162).

  When doing so, make sure you are able to fasten your seat belt correctly. The shoulder belt strap must be routed forward from the seat belt outlet over the center of your shoulder.
- Keep your distance from the air bags, especially the front air bags. Set the driver's seat and front passenger seat as far back as possible while making sure the seat belt is fastened correctly.
- If persons are sitting on the rear seats, vehicle occupants should maintain a sufficient distance to the parts of the vehicle interior in front of them.
- Make sure there are no people, animals or objects between the vehicle occupants and an air bag.
- If you are the driver, observe the following information on the correct position of the driver's seat (→ page 162).

  Hold the steering wheel only by the steering wheel rim. This allows the driver's air bag to fully deploy.
- Assume a nearly upright position, with your buttocks as far back as possible in the gap between the seat cushion and seat backrest.

  This ensures that your back lies as flat and firmly as possible against the seat backrest.
- While driving, do not lean forward and do not lean against the door or side window. You may otherwise be in the deployment area of the air bags.
- Sit with your feet resting on the floor, if possible. Your thighs are slightly supported by the seat cushion

Do not put your feet up on the cockpit, for example. Your feet may otherwise be in the deployment area of the air bag.

- Fasten the seat belt correctly (⟶ page 97).

Notes on wearing the seat belt correctly

Always fasten your seat belt correctly before starting a journey. A seat belt can provide the best level of protection only if it is worn correctly.

⚠ WARNING Risk of injury or death due to incorrectly fastened seat belt

If the seat belt is not worn correctly, it cannot perform its intended protective function.

In addition, an incorrectly fastened seat belt can also cause injuries, for example, in the event of an accident or when braking or changing direction suddenly.

▶ Always ensure that all vehicle occupants have their seat belts fastened correctly and are sitting properly.

⚠ WARNING Risk of injury or death when additional restraint systems are not used for persons with a smaller stature

Persons under 5 ft (1.50 m) tall cannot wear the seat belt correctly without a suitable additional restraint system.

▶ Always secure persons under 5 ft (1.50 m) tall in a suitable restraint system.

Observe the following information on the correct seat position and sitting position (⟶ page 96).

Each vehicle occupant must observe the following notes in particular:

- The seat belt must not be twisted:
- The shoulder belt strap must be routed forward from the seat belt outlet over the center of your shoulder.
- The shoulder belt strap should neither touch your neck nor be routed under your arm or behind your back.
- The lap belt must be routed as low down across the hips as possible.

  In addition, push the lap belt down as far as possible across your hips and pull tight with the shoulder belt strap. Never route the lap belt across your abdomen.

  Pregnant women must also take particular care with this.
- The shoulder belt strap and lap belt must fit snugly against the body after being tightened.
- Avoid wearing bulky clothing, e.g. a winter coat.
- Never route the seat belt across sharp, pointed, abrasive or fragile objects.
- Only one person should use each seat belt at any one time.
- Never secure objects with a seat belt if the seat belt is also being used by one of the vehicle's occupants.

  Also ensure that no objects, e.g. a cushion, are ever placed between a person and the seat.

If you are driving with a child in the vehicle, observe the information in the chapter "Children in the vehicle" (⟶ page 112)

Observe the instructions for loading the vehicle when securing objects, luggage or loads (→ page 180).

Fastening and adjusting seat belts

If the seat belt is pulled quickly or sharply, the seat belt retractor locks. The seat belt strap cannot be pulled out any further.

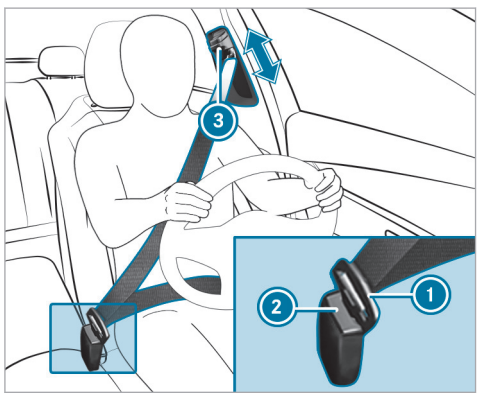

- Always engage seat belt tongue (1) of the seat belt into seat belt buckle (2) of the corresponding seat.
- **To adjust the seat belt height:** press button (3) on the seat belt outlet and slide the seat belt outlet to the desired position.
- **To engage the seat belt outlet:** release button (3) and ensure that the seat belt outlet engages.

NOTE Deployment of components of the restraint system when the front passenger seat is unoccupied and a seat belt is buckled

When the front passenger seat is unoccupied and the seat belt tongue of the seat belt is engaged in the seat belt buckle, components of the restraint system may deploy unnecessarily on the front passenger side, e.g. the Emergency Tensioning Device.

- Only buckle the seat belts as intended.

ⓘ Observe the information on child seat safety feature of the seat belt (→ page 120).

Function of the restraint system warning lamp

When the vehicle is switched on, a self-test is performed, during which the restraint system warning lamp lights up. It goes out no later than a few seconds after the vehicle is started. The components of the restraint system are then functional.

A malfunction has occurred in the restraint system if:

- the restraint system warning lamp does not light up or lights up continuously when the vehicle is switched on.
- the restraint system warning lamp lights up continuously or repeatedly during a journey.

If components of the restraint system have been deployed, the restraint system warning lamp will light up continuously.

WARNING Risk of injury due to malfunctions in the restraint system

Components in the restraint system may be activated unintentionally or not deploy as planned in an accident.

- Have the restraint system checked and repaired immediately at a qualified specialist workshop.

Mercedes-Benz recommends that you have the vehicle towed to a qualified specialist workshop.

Function of the seat belt warning lamp

The seat belt warning lamp in the driver's display is a reminder that all vehicle occupants must wear their seat belts correctly.

The seat belt warning lamp lights up for six seconds every time the vehicle is started.

In addition, a warning tone may sound.

When the driver's and front passengers doors are closed and the driver and front passenger have fastened their seat belts, the seat belt warning goes out.

In the following cases, the seat belt warning lights up during a journey if:

- The driver or front passenger is not wearing a seat belt and the following criteria apply:
  - The vehicle travels faster than 5 mph (9 km/h) for more than 20 seconds.
  - The vehicle travels faster than 15 mph (25 km/h) once.
- The driver or front passenger unfastens their seat belt while the vehicle is in motion.

Function of the rear seat belt status display

The rear seat belt status display in the driver's display is a reminder that all vehicle occupants must wear their seat belts correctly.

In addition, a warning tone may sound.

If a person unfastens a seat belt in the rear passenger compartment while the vehicle is motion, the rear seat belt status display appears again.

Display in the driver's display

Every time the vehicle is switched on, the rear seat belt status display informs you for a certain amount of time which rear seat belt is not fastened.

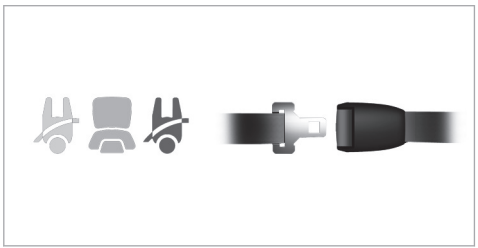

You can determine the status of the rear seat belt by the color of the seat symbol in the driver's display as follows:

- Gray: the rear seat belt is not fastened.
- Green: the seat belt tongue of a rear seat belt is engaged in the seat belt buckle of the displayed seat.
- Red: the person in the rear seat has unfastened their seatbelt.

Function of the PASSENGER AIR BAG indicator lamps (front passenger air bag)



The PASSENGER AIR BAG indicator lamps display the status of the front passenger air bag.

If the front passenger seat is occupied or a child restraint system is installed on the front passenger seat, you must make sure, both before and during a journey, that the status of the front passenger air bag is correct for the current situation.

⚠ WARNING Risk of potentially fatal injuries due to objects trapped under the front passenger seat

Objects trapped under the front passenger seat may interfere with the function of the automatic front passenger air bag shutoff or damage the system.

- ▶ Do not stow any objects under the front passenger seat.
- ▶ When the front passenger seat is occupied, ensure that no objects have become trapped beneath the front passenger seat.

Self-test: when the vehicle is switched on, both the PASSENGER AIR BAG ON and OFF indicator lamps light up simultaneously for several seconds.

After the self-test, you can determine the status of the front passenger air bag as follows:

- **Front passenger air bag disabled:** PASSENGER AIR BAG OFF lights up continuously.

  The front passenger air bag will not be deployed in the event of an accident. If PASSENGER AIR BAG OFF is lit, no one may use the front passenger seat.

  If a rearward-facing child restraint system is installed on the front passenger seat, PASSENGER AIR BAG OFF must be lit continuously.
- **Front passenger air bag enabled:** PASSENGER AIR BAG ON lights up for up to 60 seconds or both the PASSENGER AIR BAG ON and OFF indicator lamps do not light up.

  The front passenger air bag may be deployed during an accident. If the front passenger air bag has this status, no rearward-facing child restraint system may be installed on the front passenger seat.

ⓘ If you are driving with a child in the vehicle, observe the information in the chapter "Children in the vehicle" (→ page 112)

⚠ WARNING Risk of injury or death due to a disabled front passenger airbag

The front passenger airbag is disabled when the PASSENGER AIR BAG OFF indicator lamp is lit.

A person in the front passenger seat could then, for example, come into contact with the vehicle interior, especially if the person is sitting too close to the cockpit.

If the front passenger seat is occupied, always ensure that:

- The classification of the person in the front passenger seat is correct and the front passenger airbag is enabled or disabled in accordance with the person in the front passenger seat.
- The front passenger seat has been moved as far back as possible.
- The person is seated correctly.

▶ Both before and during the journey, ensure that the status of the front passenger airbag is correct.

Malfunction of the automatic front passenger air bag shutoff

The PASSENGER AIR BAG OFF indicator lamp and the restraint system indicator lamp light up simultaneously.

In this case, no one may use the front passenger seat and no child restraint system may be installed on the front passenger seat.

Have the automatic front passenger air bag shutoff checked and repaired immediately at a qualified specialist workshop.

Disabling or enabling the front passenger air bag

The automatic front passenger air bag shutoff can activate or deactivate the front passenger air bag and front passenger knee bag according to the situation.

This happens automatically as a result of the classification of the person or child restraint system on the front passenger seat.

You cannot manually disable or enable the front passenger air bag.

Information on the child restraint system

When installing a child restraint system, observe the notes in "Children in the vehicle" (→ page 112).

Notes on the child restraint system on the front passenger seat

⚠ WARNING Risk of injury or fatal injuries if the front passenger air bag is enabled

If the front passenger air bag is enabled, a child on the front passenger seat may be struck by the front passenger air bag in the event of an accident.

▶ NEVER use a rearward-facing child restraint system on a seat with an ENABLED FRONT AIR BAG. This can result in the DEATH of or SERIOUS INJURY to the CHILD.

Also pay particular attention to the notes on rearward-facing or forward-facing child restraint systems on the front passenger seat (→ page 116).

Information on the automatic functions of the restraint system

Function of the automatic front passenger air bag shutoff

A person on the front passenger seat must observe the following information:

- Sit correctly (⟶ page 96).
- Fasten the seat belt correctly (⟶ page 97).

The automatic front passenger air bag shutoff can activate or deactivate the front passenger air bag and front passenger knee bag according to the situation.

Make sure you observe the following information:

- Status of the front passenger air bag: see "Function of the PASSENGER AIR BAG indicator lamps" (⟶ page 100).
- When installing a child restraint system on the front passenger seat, observe the vehicle-specific information (⟶ page 116).



Status of the front passenger air bag in relation to the stature of the person:

- **Front passenger air bag disabled:** PASSENGER AIR BAG OFF lights up continuously.

  The front passenger air bag will not be deployed in the event of an accident. If PASSENGER AIR BAG OFF is lit, no one may use the front passenger seat.

- **Front passenger air bag enabled:** PASSENGER AIR BAG ON lights up for up to 60 seconds or until both the PASSENGER AIR BAG ON and OFF indicator lamps go out.

  The front passenger air bag may be deployed during an accident. Observe the following information on the correct seat position (⟶ page 96).

  Vehicles with rear seats: a person of smaller stature should use a rear seat.

System limits

The front passenger air bag may otherwise be disabled by mistake, for example, in the following situation:

- The front passenger transfers their weight by supporting themselves on a vehicle armrest.
- The front passenger sits in such a way that their weight is raised from the seat surface.

NOTE Deployment of components of the restraint system when the front passenger seat is unoccupied

In an accident, the components of the restraint system may deploy unnecessarily on the front passenger side if:

- There are heavy objects on the front passenger seat.
- The seat belt tongue is engaged in the seat belt buckle of the front passenger seat and the front passenger seat is unoccupied.

▶ Store objects in a suitable place.

▶ Only one person should use each seat belt at any one time.

Depending on the detected accident situation, the window air bag on the front passenger side may deploy. The air bag is deployed regardless of whether the front passenger seat is occupied.

Function of PRE-SAFE® (anticipatory occupant protection)

PRE-SAFE® is able to detect certain critical driving situations and implement pre-emptive measures to protect the vehicle occupants.

PRE-SAFE® can implement the following measures independently of each other:

- Tightening the seat belts on the driver's seat and front passenger seat.
- Closing the side windows.
- **Vehicles with sliding sunroof:** closing the sliding sunroof.
- **Vehicles with memory function:** moving the front passenger seat to a more favorable seat position.
- **Vehicles with multicontour seat:** increasing the lateral support by inflating the seat side bolsters of the seat backrest.
- **PRE-SAFE® Sound:** provided that the multimedia system is switched on, generating a brief noise signal to stimulate the innate protective mechanism of a person's hearing.

NOTE Damage caused by objects in the footwell or behind the seat

The automatic adjustment of the seat position may result in damage to the seat and/or the object.

▶ Stow objects in a suitable place.

Reversing the PRE-SAFE® system measures

If an accident did not occur, the pre-emptive measures that were taken will be reversed.

You will need to perform certain settings yourself.

▶ If the seat belt pre-tensioning is not reduced, move the seat backrest back slightly. The locking mechanism will release.

Function of PRE-SAFE® PLUS (anticipatory occupant protection plus)

PRE-SAFE® PLUS can detect certain impacts, particularly an imminent rear impact, and take pre-emptive measures to protect the vehicle occu-

pants. These measures cannot necessarily prevent an imminent impact.

PRE-SAFE® PLUS can implement the following measures independently of each other:

- Tightening the seat belts on the driver's seat and front passenger seat.
- Increasing brake pressure when the vehicle is stationary. This brake application is canceled automatically when the vehicle pulls away.

If an accident did not occur, the pre-emptive measures that were taken are reversed.

System limits

The system will not initiate any action in the following situations:

- if the vehicle is backing up

The system will not initiate any braking application in the following situations:

- while driving

  or

- when entering or exiting a parking space while using Active Parking Assist

You can watch an animation on this topic via the following link:

Function of PRE-SAFE® Impulse Side

If an imminent side impact is detected, PRE-SAFE® Impulse Side can pre-emptively move the upper body of the vehicle occupant on the front seat towards the center of the vehicle. It does this by rapidly inflating an air cushion in the outer seat side bolster of the seat backrest on the side on which the impact is anticipated. This increases the distance between the door and the vehicle occupant.

If PRE-SAFE® Impulse Side has been deployed or is faulty, the PRE-SAFE Pulse Side Inoperative See Operator's Manual display message appears.

Seat belt adjustment function

Vehicles with PRE-SAFE®: after you have fastened the seat belt of the front seat, it may adjust itself against your body by pulling at the shoulder until somewhat tight. Do not hold the seat belt tightly while it is adjusting.

This function is a reminder that all vehicle occupants must wear their seat belts correctly.

You can activate and deactivate the seat belt adjustment function using the multimedia system (→ page 104).

Activating/deactivating seat belt adjustment via the multimedia system

Multimedia system:

↳ ⌂ ▸▸ Settings ▸▸ Vehicle ▸▸ Occupant Protection

▶ Activate or deactivate Belt adjustment.

Overview of the automatic measures after an accident

Depending on the type and severity of the accident, and depending on the vehicle's equipment, the following measures can be implemented, forexample:

- automatic braking (post-collision brake) (→ page 105)
- activating the hazard warning lights

- triggering an automatic emergency call (→ page 57)
- Switching off the engine

  To start the vehicle again, switch the vehicle off and on once more (→ page 234). Depending on the type and severity of the accident, you may no longer be able to start the vehicle.
- switching off the fuel supply
- unlocking the vehicle doors
- lowering the side windows
- displaying the emergency guide in the central display (→ page 58)
- switching on the interior lighting

Function of the post-collision brake after an accident

Depending on the accident situation, the post-collision brake can minimise the severity of a further collision or even avoid it.

If an accident is detected, the post-collision brake can initiate automatic braking. When the vehicle has come to a standstill, the electric parking brake is automatically applied.

The driver can cancel automatic braking by taking the following actions:

- Braking more strongly than automatic braking
- Fully depressing the accelerator pedal with force

Purpose and function of the restraint system

Overview of deployment situations (restraint system)

Make sure that the following prerequisites in particular have been met so that the components of the restraint system are able to provide the intended level of protection:

- Sit correctly (→ page 96).
- Fasten the seat belt correctly (→ page 97).
  - Function of the seat belt warning lamp (→ page 99).
  - Function of the rear seat belt status display (→ page 99).
- The  restraint system warning lamp is not lit up after the self-test (→ page 98).
- The PASSENGER AIR BAG indicator lamps display the correct status of the front passenger air bag (→ page 100).

Depending on the detected deployment situation, the components of the restraint system can be activated or deployed independently of each other:

- Emergency Tensioning Device: frontal impact, rear impact, side impact, rollover
- Driver's air bag, front passenger air bag: frontal impact
- Knee air bag: frontal impact
- Side air bag: side impact
- Window air bag: side impact, rollover, frontal impact
- PRE-SAFE® Impulse Side: side impact

The installation location of an air bag is identified by the AIRBAG symbol (→ page 110).

Observe the information on the function of the restraint system (→ page 106).

Information on how the restraint system works

How the restraint system functions depends on the severity of the impact detected and the apparent type of accident.

For more information about types of accidents, see "Overview of deployment situations" (⟶ page 105).

The activation thresholds for the components of the restraint system are determined based on the evaluation of the sensor values measured at various points in the vehicle. This process is pre-emptive in nature. The triggering/deployment of the components of the restraint system must take place in good time at the start of the collision.

Factors that can be seen and measured only after a collision has occurred cannot play a decisive role in air bag deployment. Nor do they provide an indication of air bag deployment.

The vehicle may be deformed significantly without an air bag being deployed. This is the case if only parts which are relatively easily deformed are affected and the rate of vehicle deceleration is not high. Conversely, an air bag may be deployed even though the vehicle suffers only minor deformation. If very rigid vehicle parts such as longitudinal members are hit, this may result in sufficiently high levels of vehicle deceleration.

Depending on the apparent type of accident and the detected deployment situation, Emergency Tensioning Devices and/or air bags can supplement the protection offered by a correctly worn seat belt.

When enabled, an air bag can provide additional protection for the respective vehicle occupant.

Potential protection provided by each air bag:

- Knee air bag: thigh, knee and lower leg
- Driver's air bag, front passenger air bag: head and ribcage
- Window air bag: head
- Side air bag: ribcage, also pelvis for front seat occupants

However, no system available today can completely eliminate injuries and fatalities in every accident situation. In particular, the seat belt and air bag generally do not protect against objects penetrating the vehicle from the outside. It is also not possible to completely rule out the risk of injury caused by the air bag deploying.

Mercedes-Benz recommends that you have the vehicle towed to a qualified specialist workshop after an accident. Take this into account, particularly if an Emergency Tensioning Device is triggered or an air bag deployed.

If the Emergency Tensioning Devices are triggered or an air bag is deployed, you will hear a bang, and a small amount of powder may also be released:

- The bang will not generally affect your hearing.
- In general, the powder released is not hazardous to health but may cause short-term breathing difficulties to persons suffering from asthma or other pulmonary conditions.

  Provided it is safe to do so, leave the vehicle immediately or open the window in order to prevent breathing difficulties.

Air bags and pyrotechnic Emergency Tensioning Devices contain perchlorate material, which may require special handling or environmental protection measures. National guidelines regarding waste disposal must be observed. In California,

see the https://dtsc.ca.gov/. Using the search function, you will find information on perchlorate, for example.

Information on the limited protection provided by the restraint system

Risk due to the incorrect behavior of vehicle occupants

All vehicle occupants must make sure of the following in particular:

- They observe the information on the correct seat position (→ page 96).
- There are no heavy, sharp-edged or fragile objects in the pockets of their clothing. Store such objects in a suitable place.

⚠ WARNING Risk of injury or death due to an incorrect seat position

The seat belt does not offer the intended level of protection if you have not moved the seat backrest to an almost vertical position.

In particular, you could slip beneath the seatbelt and become injured.

- ▶ Adjust the seat properly before beginning your journey.
- ▶ Always ensure that the seat backrest is in an almost vertical position and that the shoulder belt is routed across the center of your shoulder.

Risk due to objects in the vehicle interior

All vehicle occupants must make sure of the following in particular:

- They observe the information on the correct seat position (→ page 96).
- There are no objects between the seat, door and door pillar (B-pillar).
- There are no hard objects, e.g. coat hangers, hanging on the grab handles or coat hooks.
- There are no heavy, sharp-edged or fragile objects in the pockets of their clothing. Store such objects in a suitable place.

⚠ WARNING Risk of injury or death due to blocked seat belt buckle or seat belt anchorage

Objects next to the front seat that block the seat belt buckle or the moving seat belt anchorage on the front seat impair the function of the Emergency Tensioning Devices.

- ▶ Before starting the journey, make sure that there are no objects around the seat belt buckle or between the front seat and door.

⚠ WARNING Risk of injury from objects in the deployment area of an airbag

Objects in the deployment area of an airbag can hinder or prevent the correct deployment of the airbag.

The airbag may then deploy in an uncontrolled manner and may even cause additional injuries to the vehicle occupants by deploying. This may be the case in particular if the airbag is integrated into the seat.

- ▶ Always stow and secure objects correctly.
- ▶ Before commencing your journey, make sure that no objects are stowed in the deployment area of an airbag.

The installation location of an air bag is identified by the AIRBAG (→ page 110) symbol.

Risk due to installing accessories

Do not attach accessories such as mobile navigation devices, mobile phones or cup holders within the deployment area of an air bag, e.g. on the cockpit, on the door, on the side window or on the side trim.

In addition, no connecting cables, tensioning straps or retaining straps may be routed or attached to the vehicle within the deployment area of an air bag. Always comply with the accessory manufacturer's installation instructions and, in particular, the notes on suitable places for installation.

⚠ WARNING Risk of injury or death due to unsuitable protective covers

Unsuitable protective covers mean that air bags can no longer protect vehicle occupants as they are designed to do.

- ▶ Use only protective covers approved by Mercedes-Benz for the seat in question.

In addition, the function of the automatic passenger air bag deactivation may be restricted by an unsuitable protective cover. If the front passenger seat is occupied, ensure that the PASSENGER AIR BAG indicator lamps display the correct status of the front passenger air bag (→ page 100).

Risk due to pets in the vehicle interior

⚠ WARNING Risk of accident and injury due to animals left unsecured or unattended in the vehicle

If you leave animals in the vehicle unattended or unsecured, they could possibly press buttons or switches.

An animal may:

- Activate vehicle equipment and become trapped, for example
- Switch systems on or off and endanger other road users

Unsecured animals may be thrown around in the vehicle in the event of an accident or sudden steering and braking maneuvers and injure vehicle occupants in the process.

- ▶ Never leave animals in the vehicle unattended.
- ▶ Always correctly secure animals while driving, e.g. using a suitable animal carrier.

Risk due to modification, damage or wear to the components of the restraint system

⚠ WARNING Risk of injury or death due to modifications to the restraint system

Vehicle occupants may no longer be protected as intended if alterations are made to the restraint system.

- Never alter the parts of the restraint system.
- Never tamper with the wiring or any electronic component parts or their software.

If it is necessary to modify the vehicle to accommodate a person with disabilities, contact an authorized Mercedes-Benz Center for details.

USA only: for details, contact our Customer Assistance Center on 1-800-FOR-MERCedes (1-800-367-6372).

⚠ WARNING Risk of injury or death due to damaged or modified seat belts

Seat belts cannot provide protection in the following situations:

- The seat belt is damaged, has been modified, is extremely dirty, bleached or dyed
- The seat belt buckle is damaged or extremely dirty
- Modifications have been made to the Emergency Tensioning Device, seat belt anchorage or seat belt retractor

Seat belts may sustain non-visible damage in an accident, e.g. due to glass splinters.

Modified or damaged seat belts could tear or fail in the event of an accident, for example.

Modified Emergency Tensioning Devices could accidentally trigger or fail to function as intended.

- Never modify the seat belt system, for example the seat belt, seat belt buckle, Emergency Tensioning Device, seat belt anchorage and seat belt retractor.
- Make sure that the seat belts are undamaged, not worn and clean.
- Always have the seat belts checked immediately after an accident at a qualified specialist workshop.

Use only seat belts that have been approved for your vehicle by Mercedes-Benz.

⚠ WARNING Risk of injury due to modifications to the cover of an airbag

If you change the cover of an airbag or attach objects, e.g. even stickers, to it, the airbag may no longer function as intended.

- Never modify the cover of an airbag.
- Do not attach any objects to the cover.

The installation location of an air bag is identified by the AIRBAG symbol (→ page 110).

⚠ WARNING Risk of injury due to malfunctioning sensors in the door

The function of the airbags can be impaired due to modifications or incorrect work performed on the doors or door trim, or if the doors are damaged.

- Never modify the doors or parts of the doors.
- Always have work on the doors or door trim carried out at a qualified specialist workshop.

Risk due to components of the restraint system that have already been deployed
Mercedes-Benz recommends that you have the vehicle towed to a qualified specialist workshop after an accident.

WARNING Risk of burns from hot air bag components

The air bag parts are hot after an air bag has been deployed.

- Do not touch the air bag parts.
- Have a deployed air bag replaced at a qualified specialist workshop as soon as possible.

WARNING Risk of injury due to deployed airbag

A deployed airbag no longer offers any protection.

- Have the vehicle towed to a qualified specialist workshop in order to have the deployed airbag replaced.

Have deployed air bags replaced immediately.

WARNING Risk of injury or death from deployed pyrotechnic Emergency Tensioning Devices

Pyrotechnic Emergency Tensioning Devices that have been deployed are no longer operational and are unable to perform their intended protective function.

- Therefore, have deployed pyrotechnic Emergency Tensioning Devices immediately replaced at a qualified specialist workshop.

Seat belts

Releasing seat belts

- Press the release button in the seat belt buckle and guide the seat belt back with the seat belt tongue.

NOTE Damage caused by trapping the seat belt

If an unused seat belt is not fully retracted, it may become trapped in the door or in the seat mechanism.

- Always ensure that an unused seat belt is fully retracted.

Airbags

Overview of air bags

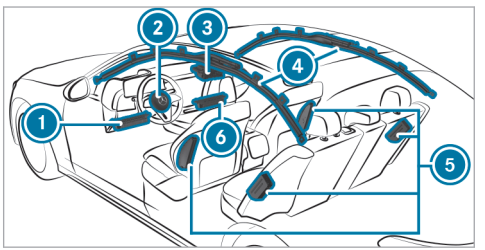

1 Driver's knee air bag
2 Driver's air bag

F214 0032 13

③ Front passenger air bag
④ Window curtain air bag
⑤ Side impact air bag
⑥ Front passenger knee air bag

The installation location of an air bag is identified by the AIRBAG symbol. An additional arrow symbol ▶ indicates the installation location for certain air bags.

Observe the information under "Overview of deployment situations" (→ page 105).

Brief overview of most important points

Safely transporting children in the vehicle

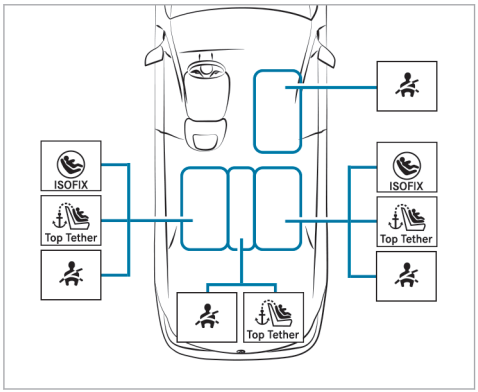

Always observe the following when transporting children:

- Do not leave children unsupervised in the vehicle (→ page 114).
- Secure children up to a height of 5 ft (1.50 m) on the respective seat (see illustration above) properly with a suitable and approved child restraint system , and secure small children in a rearward-facing child restraint system.
- Observe the child restraint system manufacturer's installation instructions.

Left/right rear seat (preferred seats)

Preferred securing system:

LATCH-type (ISOFIX) securing ring

and

Also secure Top Tether if present (→ page 122).

Alternative securing system:

Vehicle seat belt (→ page 123)

Additionally attach Top Tether if recommended by the manufacturer of the child restraint system (→ page 122).

Front passenger seat

Securing system:

Vehicle seat belt (→ page 123)

Be sure to observe:

- If the front passenger seat is occupied, ensure that the status of the front passenger air bag is correct for the current situation (→ page 100).

Center rear seat

Securing system:

Vehicle seat belt (→ page 123)

Additionally attach Top Tether if recommended by the manufacturer of the child restraint system (→ page 122).

Important safety notes

Basic information

Be diligent

Bear in mind that negligence when securing a child in the child restraint system may have seri-

ous consequences. Always be diligent in securing a child carefully before every journey.

Never allow babies and children to travel sitting on the lap of another vehicle occupant.

To improve protection for children younger than 12 years old or under 5 ft (1.50 m) in height, Mercedes-Benz recommends you observe the following information:

- Always secure the child in a child restraint system suitable for this Mercedes-Benz vehicle.
- The child restraint system must be appropriate to the age, weight and size of the child.
- The vehicle seat must be suitable for the child restraint system to be installed:

Accident statistics show that children secured on the rear seats are generally safer than children secured on the front seats. For this reason, Mercedes-Benz strongly advises that you install a child restraint system on a rear seat.

The generic term "child restraint system"

The generic term "child restraint system" is used in this Operator's Manual. A child restraint system is, for example:

- a baby car seat
- a rearward-facing child seat
- a forward-facing child seat
- a child booster seat – Mercedes-Benz recommends using a child booster seat **with** a backrest and seat belt guide.

Observe laws and legal requirements

Always observe the legal requirements when using a child restraint system in the vehicle.

Securing systems for child restraint systems in the vehicle

Use only the following securing systems for child restraint systems:

- the LATCH-type (ISOFIX) securing rings
- the vehicle's seat belt system
- the Top Tether anchorages

Simply attaching to the LATCH-type (ISOFIX) securing rings on the vehicle can reduce the risk of installing the child restraint system incorrectly.

When securing a child with the integrated seat belt of the ISOFIX/LATCH child restraint system, always comply with the permissible gross weight for the child and child restraint system (→ page 121).

A child booster seat may be necessary to achieve proper seat belt positioning for children over 40 lbs (18 kg) in weight or until they reach a height at which they can wear a three-point seat belt properly without a child booster seat.

Mercedes-Benz recommends a suitable child booster seat with a backrest and seat belt guide.

Observe standards for child restraint systems

All child restraint systems must meet the following standards:

- U.S. Federal Motor Vehicle Safety Standards 213
- Canadian Motor Vehicle Safety Standards 213

Confirmation that the child restraint system complies with the standards can be found on an

instruction label on the child restraint system. This confirmation can also be found in the installation instructions that are included with the child restraint system.

Important warning notices

Always secure a child restraint system correctly

WARNING Risk of injury or death due to incorrect installation of the child restraint system

The child can then not be protected or restrained as intended.

- Be sure to comply with the manufacturer's installation instructions for the child restraint system and its correct use.
- Make sure that the entire base of the child restraint system always rests on the sitting surface of the seat.
- Never place objects (e.g. cushions) under or behind the child restraint system.
- Use child restraint systems only with the original cover designed for them.
- Always replace damaged covers with genuine covers.

- Always observe the vehicle-specific information.
  - Installing the ISOFIX child restraint system on the right and left rear seats (→ page 121).
  - Securing the child restraint system with the seat belt (→ page 123).
- Observe the warning labels in the vehicle interior and on the child restraint system.

WARNING Risk of injury or death due to unsecured child restraint systems in the vehicle

If the child restraint system is incorrectly mounted or unsecured, it may come loose.

The child can then not be protected or restrained as intended.

Unused child restraint systems could be flung around and hit vehicle occupants.

- Always comply with the manufacturer's installation instructions for the child restraint system and its correct use.
- Always fit child restraint systems correctly, even if they are transported in the vehicle unused.

Do not modify the child restraint system

WARNING Risk of injury due to modifications to the child restraint system

The child restraint system can no longer function properly. This poses an increased risk of injury.

- Never modify a child restraint system.
- Only affix accessories which have been specially approved for this child restraint system by the child restraint system's manufacturer.

Use only child restraint systems that are in proper working condition

WARNING Risk of injury or death caused by the use of damaged child restraint systems

Child restraint systems or their retaining systems that have been subjected to stress in an accident may not be able to perform their intended protective function.

It may be the case that the child cannot be properly restrained.

- Always immediately replace child restraint systems that have been damaged or involved in an accident.
- Have the securing systems for the child restraint systems checked at a qualified specialist workshop before installing a child restraint system again.

Avoid direct sunlight

WARNING Risk of burns when the child seat is exposed to direct sunlight

If the child restraint system is exposed to direct sunlight or heat, parts could heat up excessively.

Children could suffer burns from these parts, particularly the metallic parts of the child restraint system.

- Always make sure that the child restraint system is not exposed to direct sunlight.
- Cover the child restraint system with a blanket, for example.
- If the child restraint system has been exposed to direct sunlight, allow it to cool before securing a child into it.
- Never leave children unattended in the vehicle.

Observe when stopping or parking

WARNING Risk of fatal injury due to exposure to extreme heat or cold in the vehicle

If persons, particularly children, are subjected to prolonged exposure to intense heat or cold, there is a risk of severe injury or even death.

- Never leave persons, particularly children, unattended in the vehicle.

WARNING Risk of accident and injury if children are left unattended in the vehicle

If children are left unattended in the vehicle, they could in particular:

- open doors, thereby endangering other persons or road users.
- get out and be struck by oncoming traffic.
- operate vehicle equipment and become trapped, for example.

In addition, the children could also set the vehicle in motion, for example by:

- releasing the parking brake.
- changing gear.
- starting the vehicle.

▶ Never leave children unattended in the vehicle.

▶ When leaving the vehicle, always take the SmartKey with you and lock the vehicle.

▶ Keep the SmartKey out of the reach of children.

Notes for vehicles with the MBUX Interior Assistant

Also note the additional functions of the MBUX Interior Assistant:

- if the child restraint system is not fastened, a corresponding message appears in the central display (→ page 392).

Notes on rearward-facing and forward-facing child restraint systems on the front passenger seat

⚠ **WARNING** Risk of injury or fatal injury when using a rearward-facing child restraint system while the co-driver airbag is enabled

If you secure a child in a rearward-facing child restraint system on the co-driver seat and the PASSENGER AIR BAG OFF indicator lamp is off, the co-driver airbag can deploy in the event of an accident.

The child could be struck by the airbag.

▶ Always ensure that the co-driver airbag is disabled. The PASSENGER AIR BAG OFF indicator lamp must be lit.

▶ NEVER use a rearward-facing child restraint system on a seat with an ENABLED FRONT AIRBAG; DEATH or SERIOUS INJURY to the CHILD can occur.

Observe the specific instructions for the rearward-facing and forward-facing child restraint systems (→ page 118).

If it is absolutely necessary to install a child restraint system on the front passenger seat, always observe the following notes:

- When using a rearward-facing child restraint system on the front passenger seat, the front passenger air bag must always be disabled. This is only the case if the PASSENGER AIR BAG OFF indicator lamp is lit continuously (→ page 100).
- The front passenger air bag is enabled when the PASSENGER AIR BAG OFF indicator lamp is not lit. The front passenger air bag may be deployed during an accident. In that case, do not use rearward-facing child restraint systems.

Information on automatic front passenger air bag shutoff

If the front passenger seat is occupied, ensure, both before and during the journey, that the status of the front passenger air bag is correct for the current situation.

WARNING Risk of injury or death due to objects between the seat surface and the child restraint system

Objects between the seat surface and the child restraint system can interfere with the function of the automatic front passenger air bag shutoff.

- Do not place any objects between the seat surface and the child restraint system.
- Make sure that the entire base of the child restraint system rests on the seat cushion of the front passenger seat.
- The backrest of a forward-facing child restraint system must, as far as possible, be resting against the seat backrest of the front passenger seat.
- Always comply with the installation instructions from the child restraint system manufacturer.

When installing a child restraint system on the front passenger seat, observe the vehicle-specific information (→ page 116).

Rearward-facing child restraint system on the front passenger seat

If a rearward-facing child restraint system is installed on the front passenger seat, the front passenger air bag must be disabled. The PASSENGER AIR BAG OFF indicator lamp must be continuously lit (→ page 100).

WARNING Risk of injury or fatal injury when using a rearward-facing child restraint system while the co-driver airbag is enabled

If you secure a child in a rearward-facing child restraint system on the co-driver seat and the PASSENGER AIR BAG OFF indicator lamp is off, the co-driver airbag can deploy in the event of an accident.

The child could be struck by the airbag.

- Always ensure that the co-driver airbag is disabled. The PASSENGER AIR BAG OFF indicator lamp must be lit.
- NEVER use a rearward-facing child restraint system on a seat with an ENABLED FRONT AIRBAG; DEATH or SERIOUS INJURY to the CHILD can occur.

ⓘ Depending on the child restraint system and the stature of the child, the front passenger air bag will be enabled. The PASSENGER AIR BAG OFF indicator lamp will not light up.
The front passenger air bag may be deployed during an accident. If the front passenger air bag has this status, no rearward-facing child restraint system may be installed on the front passenger seat.
Instead, install the rearward-facing child restraint system on a suitable rear seat.

Forward-facing child restraint system on the front passenger seat

If a forward-facing child restraint system is installed on the front passenger seat, the front passenger air bag may be automatically enabled or disabled. The status of the front passenger air bag depends on the child restraint system and the stature of the child.

The PASSENGER AIR BAG OFF indicator lamp will either light up continuously or not light up

(→ page 100). Always observe the following information.

WARNING Risk of injury or death due to incorrect positioning of the child restraint system

If you secure a child in a forward-facing child restraint system on the co-driver seat and you position the co-driver seat too close to the dashboard, in the event of an accident, the child could:

- come into contact with the vehicle's interior if the PASSENGER AIR BAG OFF indicator lamp is lit, for example
- be struck by the airbag if the PASSENGER AIR BAG OFF indicator lamp is off

▶ Always move the co-driver seat as far back as possible. In doing so, always make sure that the shoulder belt strap is correctly routed from the seat belt outlet of the vehicle to the shoulder belt guide on the child restraint system. The shoulder belt strap must be routed forwards and downwards from the seat belt outlet.

▶ If necessary, adjust the seat belt outlet and the co-driver seat accordingly.

▶ Always comply with the child restraint system manufacturer's installation instructions.

Suitable child restraint systems for the transport of children

Information on the benefit of a rearward-facing child restraint system

Transport a baby in a suitable rearward-facing child restraint system only. It is also preferable to transport a small child in a suitable rearward-facing child restraint system. In this case, the child sits in the opposite direction to the direction of travel and faces backwards.

Babies and small children have comparatively weak neck muscles in relation to the size and weight of their head. The risk of injury to the cervical spine during an accident can be reduced in a rearward-facing child restraint system.

Securing the child restraint system

Adjusting the seat correctly

When installing a child restraint system on the left or right rear seat, always observe the following:

▶ Make sure that the child's feet do not touch the front seat. If necessary, move the front seat slightly forwards.

If the head restraint of the child restraint system cannot be fully extended when it is installed in the vehicle, this will result in restrictions on the maximum size setting for certain child restraint systems. Observe the child restraint system manufacturer's installation instructions.

ⓘ Contact with the roof when the head restraint is fully extended and locked in place will not result in any restrictions on use.

When installing an ISOFIX/LATCH child restraint system, also observe the following:

▶ **When using a rearward-facing child restraint system on a rear seat:** adjust the front seat so that it does not touch the child restraint system.

- **When using a forward-facing child restraint system with integrated child seat belt:** adjust the head restraint of the respective seat so that it does not push the child restraint system forwards. If necessary, the respective head restraint can be removed. In addition, the backrest of the child restraint system must lie as flat as possible against the backrest of the vehicle seat. After the child restraint system has been removed, replace the vehicle head restraint immediately and adjust correctly.
- The child restraint system must not be put under strain between the roof and seat cushion and/or be installed facing the wrong direction. Where possible, adjust the seat cushion inclination accordingly.
- Adjust the vehicle head restraints so that the child restraint system is not put under strain by the head restraint.

When installing a belt-secured child restraint system, also observe the following:

- **When using a rearward-facing child restraint system on a rear seat:** adjust the front seat so that it does not touch the child restraint system.
- Also secure Top Tether if present (→ page 122).
- **When using a forward-facing child restraint system with integrated child seat belt:** adjust the head restraint of the respective seat so that it does not push the child restraint system forwards. If necessary, the respective head restraint can be removed. In addition, the backrest of the child restraint system must lie as flat as possible against the backrest of the vehicle seat. After the child restraint system has been removed, replace the vehicle head restraint immediately and adjust correctly.
- The backrest of the forward-facing child restraint system must be resting as flat as possible on the seat backrest of the rear seat.
- The child restraint system must not be put under strain between the roof and seat cushion and/or be installed facing the wrong direction. Where possible, adjust the seat cushion inclination accordingly.
- Adjust the vehicle head restraints so that the child restraint system is not put under strain by the head restraint.
- Make sure that the child's feet do not touch the front seat. If necessary, move the front seat slightly forwards.

Depending on the vehicle equipment, always observe the following when installing a belt-secured child restraint system on the front passenger seat:

- Observe the notes on rearward- and forward-facing child restraint systems on the front passenger seat (→ page 116).
- **When using a forward-facing child restraint system integrated child seat belt:** remove the head restraint from the respective seat, if possible. After the child restraint system has been removed, immediately replace the head restraint and adjust correctly.
- The backrest of the forward-facing child restraint system must be resting as flat as possible on the seat backrest of the front passenger seat.

- The child restraint system must not be put under strain between the roof and seat cushion and/or be installed facing the wrong direction.
- Adjust the vehicle head restraints so that the child restraint system is not put under strain by the head restraint.
- Never place objects (e.g. cushions) under or behind the child restraint system.
- Set the front passenger seat as far back as possible and move the seat into the highest position if possible. Always make sure that the shoulder belt strap is correctly routed from the seat belt outlet of the vehicle to the shoulder belt guide on the child restraint system. The shoulder belt strap must be routed forwards from the seat belt outlet and, where possible, downwards to the child restraint system.
- Fully retract the seat cushion length adjustment.
- Adjust the seat cushion inclination so that the front edge of the seat cushion is in the highest position and the rear edge of the seat cushion is in the lowest position.
- Set the seat backrest to the most vertical position possible.

Activating or deactivating the special seat belt retractor of the seat belt

⚠ **WARNING** Risk of injury or death if a seat belt is unfastened while the vehicle is in motion

If the seat belt is released while the vehicle is in motion, the special seat belt retractor is deactivated and the child restraint system is no longer correctly secured. The seat belt is drawn in slightly by the inertia reel and cannot be immediately closed again.

- Stop the vehicle immediately in accordance with the traffic conditions.
- Activate the special seat belt retractor again and correctly secure the child restraint system.

When enabled, the child seat safety feature ensures that the seat belts of the front passenger seat and rear seats do not slacken once the child restraint system is secured.

The seat belts on the following seats are equipped with a child seat safety feature:

- Front passenger seat
- Rear seats

Installing a child restraint system

- When installing a child restraint system, always observe the manufacturer's installation and operating instructions as well as the information in this Operator's Manual.
- Pull the seat belt smoothly from the seat belt outlet.
- Engage the seat belt tongue in the belt buckle.

Activating the special seat belt retractor:

- Pull the seat belt out fully and let the inertia reel retract it again.
  When the special seat belt retractor is activated, you should hear a ratcheting sound.

▶ Push the child restraint system down until the seat belt sits tightly.

Deactivating the special seat belt retractor:

▶ Press the release button of the seat belt buckle.

▶ Hold the seat belt tongue and guide back to the seat belt outlet.

Installing an ISOFIX/LATCH child restraint system

⚠ **WARNING** Risk of accident if the rear bench seat, rear seat and seat backrest are not engaged

The rear bench seat, rear seat and seat backrest may fold forwards, even when you are driving.

- As a result, the vehicle occupant will be pushed into the seat belt with increased force. The seat belt will not be able to protect as intended and could cause additional injury.
- Objects or loads in the trunk or cargo compartment will not be restrained by the seat backrest.

▶ Make sure that the rear bench seat, the rear seat and the seat backrest are engaged before every trip.

If the seat backrest in the rear passenger compartment is not engaged and locked in place, the red lock verification indicator will be visible.

⚠ **WARNING** Risk of injury or death if the permissible gross mass of the child and child restraint system together is exceeded.

Too much load may be placed on the LATCH-type (ISOFIX) or iSize child restraint systems and the child may not be restrained correctly in the event of an accident, for example.

▶ If the child is secured in a LATCH-type (ISOFIX) child restraint system with integrated seat belt, the total mass of the child and child restraint system must not exceed 73 lb (33 kg).

Always comply with the information about the mass of the child:

- in the manufacturer's installation and operating instructions for the child restraint system used
- on a label on the child restraint system, if available

Regularly check that the permissible gross mass of the child and child restraint system is still complied with.

When you install a child restraint system, observe the following:

☑ Always observe the correct use and suitability of the seats for attaching a child restraint system.

 LATCH-type (ISOFIX) securing rings

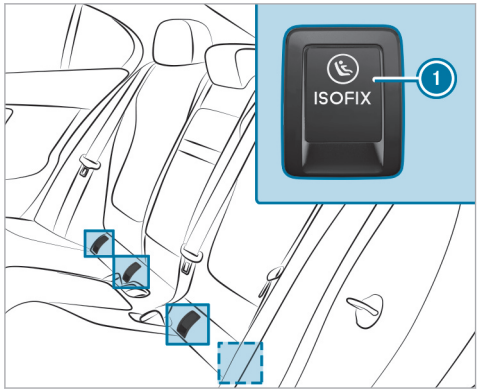

1 LATCH-type (ISOFIX) securing rings

Before every journey, make sure that the ISOFIX/LATCH child restraint system has engaged both securing rings in the vehicle correctly.

NOTE Damage to the seat belt for the center seat during installation of the child restraint system

- Make sure that the seat belt is not trapped.

- Fold the respective covers of LATCH-type (ISOFIX) securing rings 1 backwards.
- Attach the ISOFIX/LATCH child restraint system to both securing rings 1 in the vehicle.

Fastening a Top Tether

WARNING Risk of injury or death if the rear seat backrests are not locked after Top Tether belts are installed

The rear seat backrests may fold forwards when you are driving.

As a result, child restraint systems will no longer be able to perform their intended protective function. This may also cause additional injuries.

- Always lock rear seat backrests after installing Top Tether belts.
- Observe the lock verification indicator.

If the rear seat backrest is not engaged and locked in place, the red lock verification indicator will be visible.

If the child restraint system is equipped with a Top Tether belt:

The risk of injury may be reduced by Top Tether. The Top Tether belt enables an additional connection between the child restraint system attached with ISOFIX (left and right rear seats) or the seat belt (all rear seats) and the vehicle.

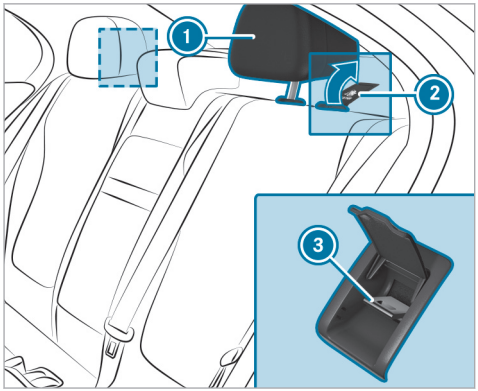

- If necessary, slide head restraint (1) upwards (→ page 169).
- Fold up cover (2) of Top Tether anchorage (3).
- Install the ISOFIX/LATCH or belt-secured child restraint system with Top Tether. In doing so, comply with the child restraint system manufacturer's installation instructions.

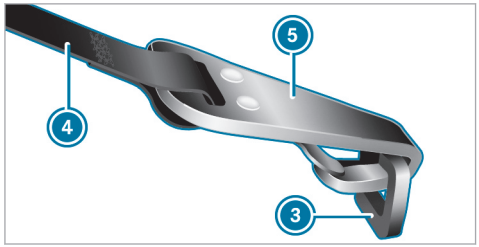

- Guide Top Tether belt (4) under head restraint (1) between the two head restraint bars.
- Hook Top Tether hook (5) of Top Tether belt (4) into Top Tether anchorage (3) without twisting.
- Tension Top Tether belt (4). In doing so, comply with the child restraint system manufacturer's installation instructions.
- Fold down cover (2) of Top Tether anchorage (3).
- If necessary, slide head restraint (1) downwards (→ page 169). Make sure that you do not interfere with the correct routing of Top Tether belt (4).

F214 0032 13

Securing the child restraint system with the seat belt

⚠ **WARNING** Risk of accident if the rear bench seat, rear seat and seat backrest are not engaged

The rear bench seat, rear seat and seat backrest may fold forwards, even when you are driving.

- As a result, the vehicle occupant will be pushed into the seat belt with increased force. The seat belt will not be able to protect as intended and could cause additional injury.
- Objects or loads in the trunk or cargo compartment will not be restrained by the seat backrest.

- Make sure that the rear bench seat, the rear seat and the seat backrest are engaged before every trip.

If the rear seat backrest is not engaged and locked in place, the red lock verification indicator will be visible.

The seat belts on the following seats are equipped with a special seat belt retractor:

- Front passenger seat
- Rear seats

When enabled, the special seat belt retractor ensures that the seat belts of the front passenger seat and rear seats do not slacken once the child restraint system is secured .

- For a child restraint system in the "Universal" or "Semi-Universal" category, make sure that the system has been approved for the vehicle seat.
- Install the child restraint system.
  The entire base of the child restraint system must always rest on the sitting surface of the seat.
- Always make sure that the shoulder belt strap is correctly routed from the seat belt outlet of the vehicle to the shoulder belt guide on the child restraint system.
  The shoulder belt strap must be routed forwards from the seat belt outlet and, where possible, downwards to the child restraint system.
- **When installing on the rear seat:** also secure Top Tether if present.
- **When installing on the front passenger seat:** if necessary, adjust the seat belt outlet and the front passenger seat accordingly.

Child safety locks

Activating or deactivating the child safety lock for the rear doors

WARNING Risk of accident and injury if children are left unattended in the vehicle

If children are left unattended in the vehicle, they could in particular:

- open doors, thereby endangering other persons or road users.
- get out and be struck by oncoming traffic.
- operate vehicle equipment and become trapped, for example.

In addition, the children could also set the vehicle in motion, for example by:

- releasing the parking brake.
- changing gear.
- starting the vehicle.

- Never leave children unattended in the vehicle.
- When leaving the vehicle, always take the SmartKey with you and lock the vehicle.
- Keep the SmartKey out of the reach of children.

WARNING Risk of fatal injury due to exposure to extreme heat or cold in the vehicle

If persons, particularly children, are subjected to prolonged exposure to intense heat or cold, there is a risk of severe injury or even death.

- Never leave persons, particularly children, unattended in the vehicle.

WARNING Risk of accident and injury due to children left unattended in the vehicle

If children are traveling in the vehicle, they could, in particular:

- Open doors, thereby endangering other persons or road users.
- Get out and be struck by oncoming traffic.
- Operate vehicle equipment and become trapped, for example.

- Always activate the installed child safety locks if children are traveling in the vehicle.
- Never leave children unattended in the vehicle.
- When leaving the vehicle, always take the SmartKey with you and lock the vehicle.

There are child safety locks for the rear doors and the rear side windows.
The child safety lock on the rear doors secures each door separately. The doors can no longer be opened from the inside.

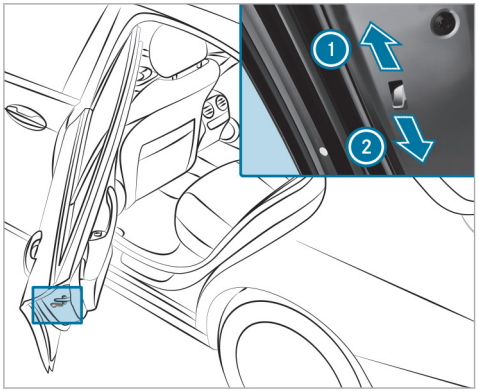

- Press the lever in direction 1 (activate) or 2 (deactivate).
- Make sure that the child-proof locks are working properly.

Activating and deactivating the child safety lock for the rear side windows

WARNING Risk of accident and injury if children are left unattended in the vehicle

If children are left unattended in the vehicle, they could in particular:

- open doors, thereby endangering other persons or road users.
- get out and be struck by oncoming traffic.
- operate vehicle equipment and become trapped, for example.

In addition, the children could also set the vehicle in motion, for example by:

- releasing the parking brake.
- changing gear.
- starting the vehicle.

- Never leave children unattended in the vehicle.
- When leaving the vehicle, always take the SmartKey with you and lock the vehicle.

- Keep the SmartKey out of the reach of children.

WARNING Risk of fatal injury due to exposure to extreme heat or cold in the vehicle

If persons, particularly children, are subjected to prolonged exposure to intense heat or cold, there is a risk of severe injury or even death.

- Never leave persons, particularly children, unattended in the vehicle.

WARNING Risk of accident and injury due to children left unattended in the vehicle

If children are traveling in the vehicle, they could, in particular:

- Open doors, thereby endangering other persons or road users.
- Get out and be struck by oncoming traffic.
- Operate vehicle equipment and become trapped, for example.

- Always activate the installed child safety locks if children are traveling in the vehicle.
- Never leave children unattended in the vehicle.
- When leaving the vehicle, always take the SmartKey with you and lock the vehicle.

There are child safety locks for the rear doors and the rear side windows.

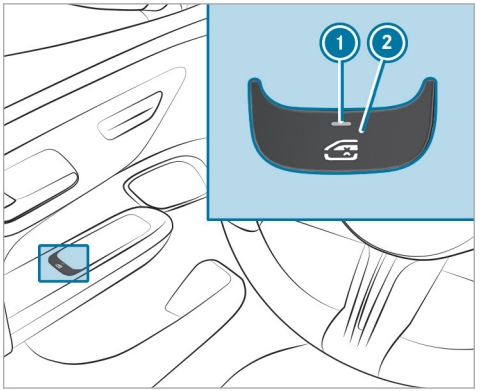

- **To activate/deactivate:** press button (2).

  The rear side window can be opened or closed in the following cases:

  - Indicator lamp (1) is lit: via the switch on the driver's door
  - Indicator lamp (1) is off: via the switch on the corresponding rear door or driver's door

Occupant presence reminder

Function of the occupant presence reminder

The occupant presence reminder can help to remind you about a child who may have been forgotten in the rear passenger compartment of the vehicle. It activates and deactivates automatically when the rear door is open for an extended period of time and a child, which the system presumes to be present, could enter or exit the vehicle.

When the vehicle is switched off, the Do Not Leave People or Animals in the Vehicle message will appear on the driver's display if the system has previously activated automatically.

You can permanently deactivate the function in the multimedia system (→ page 127). When the system is deactivated, the indicator lamp in the driver's display lights up.

Activating or deactivating the occupant presence reminder in the multimedia system

Multimedia system:

↳ ⌂ ▸▸ Settings ▸▸ Vehicle ▸▸ Occupant Protection

▶ Activate or deactivate the function.

SmartKey

Overview of key functions

WARNING Risk of accident and injury due to children left unattended in the vehicle

If you leave children unattended in the vehicle, they could, in particular:

- open doors, thereby endangering other persons or road users.
- get out and be struck by oncoming traffic.
- operate vehicle equipment and become trapped, for example.

In addition, the children could also set the vehicle in motion by, for example:

- releasing the parking brake.
- changing the gearbox position.
- starting the vehicle.

▶ Never leave children unattended in the vehicle.

▶ When leaving the vehicle, always take the key with you and lock the vehicle.

▶ Keep the key out of reach of children.

This also applies to the Digital Vehicle Key.

NOTE Damage to the SmartKey caused by magnetic fields

▶ Keep the SmartKey away from strong magnetic fields.



Vehicle key with panic alarm

1. Opens/closes the trunk lid
2. Unlocks (with embossed surface)
3. Locks
4. Indicator lamp
5. Panic alarm

ⓘ If indicator lamp 4 does not light up after you press the [🔓] or [🚗] button, the battery may be weak or possibly discharged. Replace the battery as soon as possible.

Replace the key battery (→ page 130).

The key locks and unlocks the following components:

- Doors
- Fuel filler flap
- Trunk lid

If the vehicle is not opened within approximately 40 seconds after unlocking, it will lock again. Anti-theft protection will be armed again.

Do not keep the key together with electronic devices or metal objects. This may affect the key's functionality.

F214 0032 13

Activating/deactivating the acoustic locking verification signal

Multimedia system:

→ ⌂ ▸▸ Settings ▸▸ Vehicle ▸▸ Open/Close

▶ Activate or deactivate the Acoustic Lock.

Activating/deactivating the panic alarm

Requirements

- The vehicle is switched off.



▶ **To activate:** press button 1 for approximately one second.
A visual and audible alarm is triggered.

▶ **To deactivate:** briefly press button 1 again.

or

▶ Press the start/stop button.
A key belonging to the vehicle must be detected in the vehicle.

Changing the unlocking settings

Possible unlocking functions of the key:

- Central unlocking
- Unlocking the driver's door and fuel filler flap

▶ **To switch between settings:** press the 🔓 and 🚗 buttons simultaneously for approximately six seconds until the indicator lamp flashes twice.

Options if the unlocking function for the driver's door and fuel filler flap has been selected:

- **To unlock the vehicle centrally:** press the 🔓 button twice.
- **Vehicles with KEYLESS-GO:** if you touch the inner surface of the door handle on the driver's door, only the driver's door and the fuel filler flap are unlocked.

Deactivating the function of the key

Vehicles with KEYLESS-GO: if you deactivate the function of the SmartKey, the KEYLESS-GO functions will also be deactivated. Access or drive authorization by KEYLESS-GO will then no longer be possible with that particular SmartKey. Activate the function of the SmartKey so that all its functions will again be available.

You can also deactivate the function of the SmartKey to reduce the energy consumption of the SmartKey if you do not use the vehicle or a SmartKey for an extended period of time.

▶ Press and hold the 🚗 button on the SmartKey.

▶ With the key button 🚗 pressed, immediately press key button 🔓 twice in quick succession.
The indicator light of the key lights up once briefly and once for a long time.

ⓘ The following options for re-activating the SmartKey are available:

- Press any button on the SmartKey.
- Start the vehicle with the SmartKey in the marked space in the center console (→ page 237).

Removing/inserting the mechanical key

Removing the mechanical key

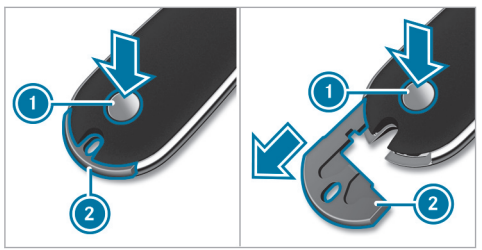

- ▶ Press release button ①. Emergency key ② is pushed out slightly.
- ▶ Fully remove mechanical key ②.

Inserting the mechanical key

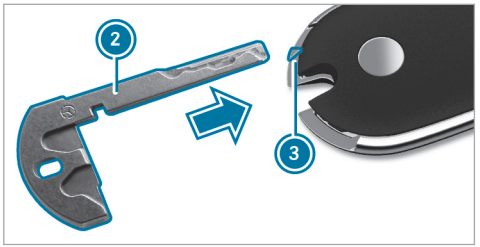

- ▶ Insert mechanical key ② at marking ③ until it engages.

ⓘ You can use mechanical key ② to attach the key to a key ring.

Replacing the key battery

⚠ **DANGER** Risk of fatal injuries due to swallowing batteries

Batteries contain toxic and corrosive substances. If batteries are swallowed or otherwise enter the body, severe internal burns can occur within two hours.

There is a risk of fatal injury.

- ▶ Keep batteries out of the reach of children.
- ▶ If the battery compartment cover and/or lid do not close securely, stop using the key and keep it away from children.
- ▶ If batteries are swallowed or otherwise enter the body, seek immediate medical attention.

ENVIRONMENTAL NOTE Environmental damage due to improper disposal of batteries

Batteries contain pollutants. It is illegal to dispose of them with the household rubbish.

Dispose of batteries in an environmentally responsible manner. Take discharged batteries to a qualified specialist workshop or to a collection point for used batteries.

Requirements

- You require a CR 2032 3 V cell battery.

Mercedes-Benz recommends that you have the battery replaced at a qualified specialist workshop.

▶ Remove the emergency key (→ page 130).

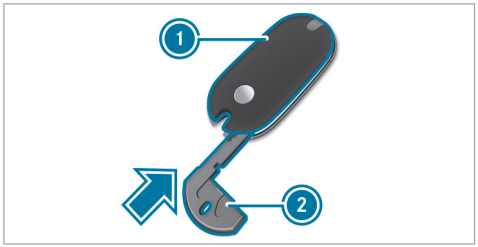

▶ Press emergency key 2 into the opening in the key in the direction of the arrow until cover 1 opens. When doing so, do not hold cover 1 closed.

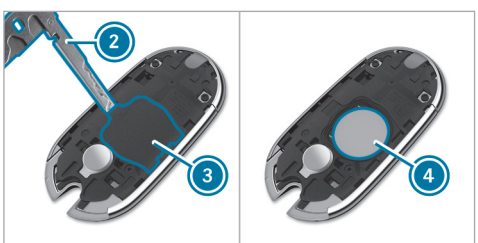

▶ Insert emergency key 2 into the opening and lift up covering 3 and remove it.

▶ Repeatedly tap the key against your palm until battery 4 falls out of the key.

▶ Insert the new battery with the positive pole facing upwards. Use a lint-free cloth to do so.

▶ Make sure that the surface of the battery is free of lint, grease and other impurities.

▶ Insert the front tabs of covering 3 into the housing and then press on both sides to close it.

▶ Make sure that covering 3 is completely closed.

▶ Insert the front tabs of cover 1 into the housing and then press until it is completely closed.

▶ Insert the emergency key again (→ page 130).

Problems with the key, troubleshooting

You can no longer lock or unlock the vehicle

Possible causes are:

- The key battery is weak or discharged.

▶ Check the battery using the indicator lamp (→ page 128).
▶ Replace the key battery, if necessary (→ page 130).
▶ Use the replacement key.
▶ Use the mechanical key to lock or unlock (→ page 141).
▶ Have key checked at a qualified specialist workshop.

There is interference from a powerful radio signal source

Possible causes if the function of the key is impaired:

- high voltage power lines
- mobile phones
- electronic devices (notebooks, tablets)
- shielding due to metal objects or induction loops for electrical gate systems or automatic barriers

▶ Make sure that there is sufficient distance between the key and the potential source of interference.

You have lost a key

▶ Have the key deactivated at a qualified specialist workshop.
▶ If necessary, have the mechanical lock replaced as well.

Digital Vehicle Key

Function of the Digital Vehicle Key

If you have activated a suitable terminal device, e.g. a smartphone, as a digital vehicle key, you can use it like a conventional vehicle key.

You can find information on setting up a user account and activating the Digital Vehicle Key service at the https://www.mercedes.me.

The Digital Vehicle Key can then be used for the following functions:

- Locking/unlocking the vehicle with KEYLESS-GO (→ page 139)
- Locking and unlocking the vehicle with the NFC function (→ page 136)
- HANDS-FREE ACCESS function (→ page 147)
- Convenience closing (closing the vehicle from outside) (→ page 152)
- Anti-theft protection (→ page 158)
- Starting the vehicle (→ page 234) or parking (→ page 260)
- Starting the vehicle with the Digital Vehicle Key in the marked space (emergency mode) (→ page 235)

Setting up and managing the Digital Vehicle Key:

- Setting up the Digital Vehicle Key (→ page 133)
- Managing the Digital Vehicle Key (→ page 134)
- Removing Digital Vehicle Key (→ page 135)

- Unlocking and locking the vehicle with the Digital Vehicle Key (→ page 136)
- Changing the unlocking settings for the Digital Vehicle Key (→ page 137)
- Fixing problems with the Digital Vehicle Key (→ page 137)

Setting up the Digital Vehicle Key

Requirements

- Create a Mercedes me user account at: https://www.mercedes.me.
- The Mercedes me app is installed on the end device (optional).
- You have received an e-mail from Mercedes me connect.

  If you have selected the "Digital Vehicle Key" equipment, you will receive an e-mail with information on how to set up the Digital Vehicle Key.
- Bluetooth® is switched on at the end device and at the vehicle.
- The terminal is sufficiently charged.

You have the following options for setting up a terminal as a Digital Vehicle Key:

- via Mercedes me app
- by e-mail
- via MBUX multimedia system

Set up via the Mercedes me app

- ▶ Start the Mercedes me app.
- ▶ Select the "Digital Vehicle Key" menu.
- ▶ Follow the steps in the Mercedes me app.

When the message "Add key and pair with vehicle" appears:

- ▶ Place the terminal in the tray (→ page 235).
- ▶ Follow the action steps on the terminal.
  Your Digital Vehicle Key is now stored in the Wallet app on your end device.

Set up by e-mail

- ▶ Open the e-mail from Mercedes me connect.
- ▶ Follow the displayed action steps as described in the email.
  Your Digital Vehicle Key is now stored in the Wallet app on your end device.

or

- ▶ Open the link in the e-mail with the end device that you want to use as a Digital Vehicle Key.
- ▶ Follow the action steps on the terminal.
  When the message "Add key and pair with vehicle" appears:
- ▶ Place the terminal in the tray (→ page 235).
- ▶ Follow the action steps on the terminal.
  Your Digital Vehicle Key is now stored in the Wallet app on your end device.

or

- ▶ Set up the terminal on the vehicle.
- ▶ Place the terminal in the tray (→ page 235).
  Mercedes-Benz Digital Vehicle Key" is displayed on the terminal device.
- ▶ Press "Enter code".
  The display for entering the code appears.
- ▶ Enter the 8-digit code displayed in the e-mail.
  When the message "Add key and pair with vehicle" appears:
- ▶ Follow the action steps on the terminal.
  Your Digital Vehicle Key is now stored in the Wallet app on your end device.

Set up via MBUX multimedia system

- ▶ Select the menus in the multimedia system Settings, Vehicle, Open/Close.
- ▶ Select Digital Vehicle Key menu.
- ▶ Follow the action steps in the multimedia system.
  Your Digital Vehicle Key is now stored in the Wallet app on your end device.

ⓘ You can now use the Digital Vehicle Key like the conventional vehicle key (⟶ page 136).

ⓘ Set up and manage the Digital Vehicle Key:
- Function (⟶ page 132)
- Managing (⟶ page 134)
- Removing (⟶ page 135)
- Changing the Unlocking Settings for the Digital Vehicle Key (⟶ page 137)

Manage digital vehicle key

Requirements

- A suitable end device is activated as a Digital Vehicle Key.
- Bluetooth® is switched on at the end device (with the activated digital vehicle key) and at the vehicle.
- The terminal is sufficiently charged.

You have the following options for managing a digital vehicle key:

- Switch express mode (comfort mode) off or on
- Set up other devices of family members or friends as digital vehicle keys.
- Setting up permissions for the digital vehicle keys

Switch express mode off or on

- ▶ Open the Wallet-App on the end device.
- ▶ Switch express mode off or on

ⓘ Express mode is switched on by default. This setting allows you to make the best possible use of the Digital Vehicle Key.
If express mode is switched off and the battery of the end device is very low, you can no longer unlock the vehicle via the NFC function.
Switch off express mode only if you do not want to use the Digital Vehicle Key function.

Setting up other terminals as digital vehicle keys

- ▶ Open the Wallet-App on the end device.
- ▶ Select the menu "Invite people to use your Mercedes-Benz key".
- ▶ Follow the action steps on the terminal.

Setting up permissions for the digital vehicle keys

You can assign the following authorization to the Digital Vehicle Keys:

- Vehicle access and driving authorization
- Vehicle access authorization

- ▶ Open the Wallet-App on the end device.
- ▶ Select the menu "Invite people to use your Mercedes-Benz key".
- ▶ Select the "Configure car key access" menu.
- ▶ Follow the action steps on the terminal.

ⓘ Further information on the digital vehicle key:
- Function (⟶ page 132)
- Setting up (⟶ page 133)

- Remove (→ page 135)
- Changing the Unlocking Settings for the Digital Vehicle Key (→ page 137)

Removing the Digital Vehicle Key

Requirements

- A suitable end device is activated as a Digital Vehicle Key.
- Bluetooth® is switched on at the end device (with the activated Digital Vehicle Key) and at the vehicle.
- The terminal is sufficiently charged.

You have the following options for removing a Digital Vehicle Key:

- via the Wallet app
- via iCloud
- via Mercedes me user account
- via MBUX multimedia system

ⓘ You can remove individual users or remove your own Digital Vehicle Key from the terminal.

Remove via the Wallet app

▶ Open the Wallet app on the end device.
▶ Select the user whose Digital Vehicle Key is to be removed.
▶ Follow the action steps on the terminal.
The selected Digital Vehicle Key is removed and can no longer be used.

Remove via iCloud

▶ Log in to iCloud.
▶ Follow the action steps.
The selected Digital Vehicle Key is removed and can no longer be used.

Remove via Mercedes me user account

The following options are available:

- Remove the linked vehicle
- Object to the terms of use and consents
- Delete the user account

▶ Log in to the Mercedes me user account.
▶ Select one of the above options.
The selected Digital Vehicle Key is removed and can no longer be used.

Remove via MBUX multimedia system

The following options are available:

- Disconnect all Digital Vehicle Keys
- Change the Digital Vehicle Key of the main owner
- Disconnect the owner's Digital Vehicle Key
- Remove a Digital Vehicle Key

▶ Select the menus in the multimedia system Settings, Vehicle, Open/Close.
▶ Select Digital Vehicle Key menu.
▶ Select one of the above options.
▶ Follow the action steps in the multimedia system.
The selected Digital Vehicle Key is removed and can no longer be used.

ⓘ Further information on the Digital Vehicle Key:

- Function (→ page 132)
- Setting up (→ page 133)
- Managing (→ page 134)
- Changing the Unlocking Settings for the Digital Vehicle Key (→ page 137)

Unlocking and locking the vehicle with the digital vehicle key

Requirements

- The "Digital Vehicle Key" function is activated via Mercedes me: https://www.mercedes.me.
- A suitable end device is activated as a Digital Vehicle Key.
- Bluetooth® is switched on at the end device and at the vehicle.
- The terminal is sufficiently charged.

ⓘ If the connection via Bluetooth® is faulty or the battery of the Digital Vehicle Key is very low, you can also lock, unlock or start the vehicle via the NFC function. (→ page 235). Depending on the end device, you can continue to use the KEYLESS-GO function for a certain time even if the battery of the digital vehicle key is very low.

The Digital Vehicle Key can be used for the following functions:

- Locking and unlocking the vehicle with the NFC function
- Locking/unlocking the vehicle with KEYLESS-GO (→ page 139)
- HANDS-FREE ACCESS function (→ page 147)
- Convenience closing (closing the vehicle from outside) (→ page 152)
- Anti-theft protection (→ page 158)
- Starting the vehicle (→ page 234) or parking (→ page 260)
- Start the vehicle with the Digital Vehicle Key in the marked space (emergency operation mode) (→ page 235)

ⓘ Mercedes-Benz recommends that you carry the emergency key in case of function restrictions (→ page 130).

ⓘ Mercedes-Benz recommends that you place the Digital Vehicle Key in the marked space while driving (→ page 235).

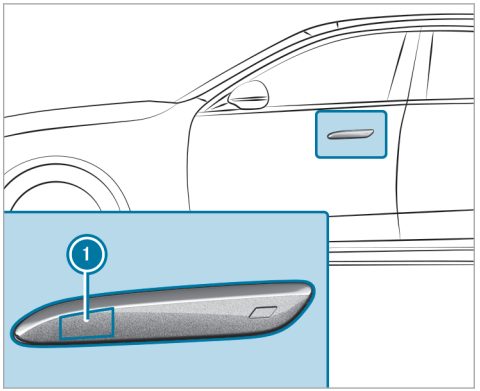

▶ **To lock and unlock the vehicle with the NFC function** hold the Digital Vehicle Key near NFC antenna (1) on the door handle.

Changing the Unlocking Settings for the Digital Vehicle Key

Multimedia system:

→ ⌂ ▸▸ Settings ▸▸ Vehicle ▸▸ Open/Close

Set selective or global unlocking

- Switch on driver's door unlocking only. Selective unlocking is activated. If this function is deactivated, the owner key unlocks the entire vehicle.

Fixing problems with the Digital Vehicle Key

You can no longer lock and unlock the vehicle with the Digital Vehicle Key.

Possible causes are:

- Bluetooth® is switched off on the Digital Vehicle Key or in the vehicle.
- The battery of the Digital Vehicle Key is low or empty.

- Switch on Bluetooth® on the Digital Vehicle Key or in the vehicle.
- Check the state of charge of the Digital Vehicle Key battery.
- If necessary, charge the battery of the Digital Vehicle Key.
- Use the NFC function of the Digital Vehicle Key to lock or unlock the vehicle. (→ page 136).
- Use the vehicle key.
- Use the emergency key to lock or unlock the vehicle (→ page 141).
- Have the vehicle and the Digital Vehicle Key checked at a qualified specialist workshop.

There is interference from a powerful radio signal source

Possible causes of Digital Vehicle Key impairment:

- High-voltage power lines
- Mobile phones
- Electronic devices (notebooks, tablets)
- Shielding due to metal objects or induction loops for electrical gate systems or automatic barriers

- Ensure sufficient distance between the Digital Vehicle Key and a potential source of interference.

You have lost a Digital Vehicle Key.

- Remove the Digital Vehicle Key (→ page 135).

Doors

Unlocking/opening the doors from the inside

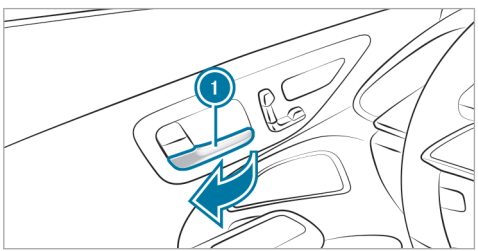

- **To unlock and open a front door:** pull door handle (1).
- **To unlock a rear door:** pull the rear door handle.

▶ **To open a rear door:** pull the rear door handle again.

Centrally locking and unlocking the vehicle from the inside

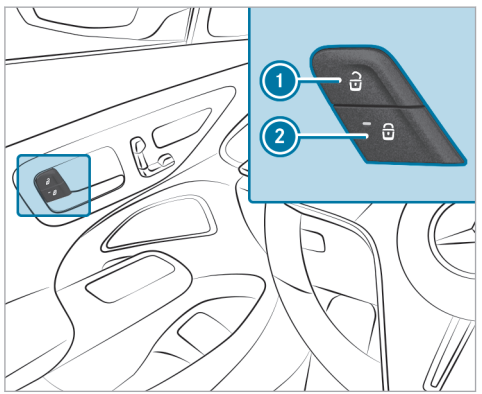

▶ **To unlock:** press (1) button.

▶ **To lock:** press button (2).
The red indicator lamp on button (2) lights up once the vehicle is locked.

ⓘ The buttons are also on the front passenger and rear doors.

This does not lock or unlock the fuel filler flap.

The vehicle is not unlocked:

- if you have locked the vehicle using the key
- if you have locked the vehicle using KEYLESS-GO

Recessed door handles extend or retract

The door handles extend automatically:

- when you unlock the vehicle with the key
- when you touch one of the two outer sensor surfaces on the door handle (when the vehicle is unlocked)

The door handles retract automatically:

- when you lock the vehicle with the key
- when pulling away
- after waiting for a time

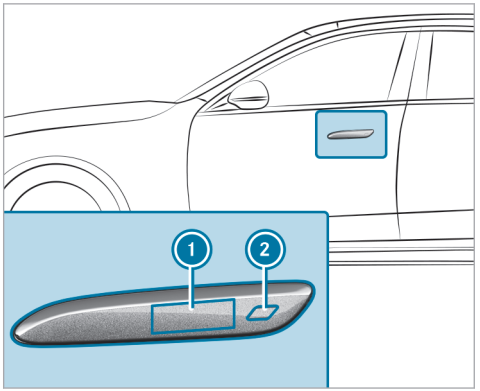

▶ **To extend the door handle:** touch outer sensor surface (1) or (2).

▶ **If the vehicle has been locked automatically and another person wishes to get in:** press the button on the driver's door to unlock the vehicle (→ page 138).
The door handles will extend.

Locking/unlocking the vehicle with KEYLESS-GO

Requirements

- The key is outside the vehicle.
- The distance between the key and the vehicle does not exceed 3 ft (1 m).
- The driver's door and the door on which the door handle is used are closed.

ⓘ **Vehicles with Digital Vehicle Key:** You can use the Digital Vehicle Key like the conventional vehicle key.

The door handles extend automatically:

- when a vehicle key is detected (the vehicle is then not yet unlocked)
- when you unlock the vehicle with the key
- when you touch one of the two outer sensor surfaces on the door handle (when the vehicle is unlocked)

The door handles retract automatically:

- when you lock the vehicle with the key
- when you touch one of the two outer sensor surfaces on the door handle to lock the vehicle
- after convenience closing (→ page 152)
- when pulling away
- after waiting for a time

! **NOTE** Damage to the vehicle caused by unintentionally opening the trunk lid or a door

- When using an automatic car wash
- When using a high pressure cleaner

▶ Deactivate the function of the SmartKey in these situations.

or

▶ Make sure that the SmartKey is at a minimum distance of 10 ft (3 m) (power washer) or 20 ft (6 m) (automatic car wash) away from the vehicle.

Vehicles with digital vehicle key:

! **NOTE** Vehicle damage due to unintentional opening of the trunk lid or a door

- when using an automatic car wash
- when using a power washer

▶ In these situations, switch off the Digital Vehicle Key.

or

▶ Make sure the key is at least 10 ft (3 m) (power washer) or 20 ft (6 m) (car wash) away from the vehicle.

Observe the notes:

- on washing the vehicle in a car wash (→ page 28)
- on using a power washer (→ page 513)

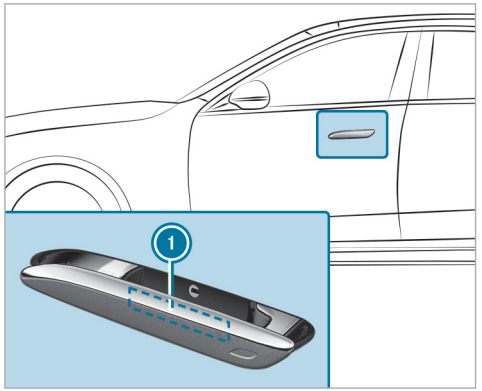

- **Unlocking the vehicle:** With the door handle extended, touch the inside surface (1) of the door handle.

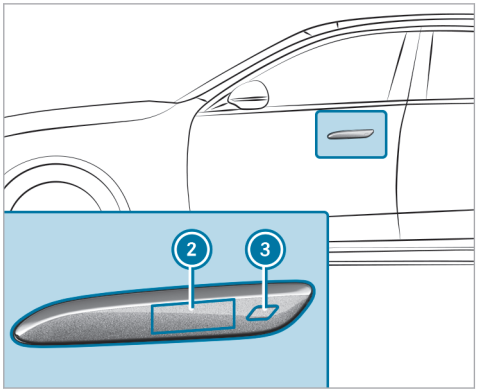

- **When the vehicle is unlocked:** To extend the door handle, touch sensor surface (2) or (3).
- **When the vehicle is locked:** To unlock, touch sensor surface (2) or (3).
- **To lock the vehicle:** touch sensor surface (2) or (3).
- **Convenience closing:** touch recessed sensor surface (3) for an extended period.

ⓘ Further information on convenience closing (→ page 152).

You can watch an animation on this topic via the following link:

Problems with KEYLESS-GO, troubleshooting

You can no longer lock or unlock the vehicle using KEYLESS-GO

Possible causes:

- The function of the SmartKey has been deactivated.
- The SmartKey battery is weak or discharged.

- Activate the function of the SmartKey (→ page 57).
- Check the battery using the indicator lamp (→ page 128).
- Replace the SmartKey battery, if necessary (→ page 130).
- Use the replacement SmartKey.
- Use the emergency key to lock or unlock (→ page 141).

▶ Have the vehicle and SmartKey checked at a qualified specialist workshop.

There is interference from a powerful radio signal source

Possible causes if the function of KEYLESS-GO is impaired:

- High voltage power lines
- Mobile phones
- Electronic devices (notebooks, tablets)
- Shielding due to metal objects or induction loops for electrical gate systems or automatic barriers

▶ Make sure that there is sufficient distance between the SmartKey and the potential source of interference.

Activating/deactivating the automatic locking feature

Multimedia system:

↳ ⌂ ▸▸ Settings ▸▸ Vehicle ▸▸ Open/Close

ⓘ The vehicle will be locked automatically when the vehicle is switched on and the wheels are turning faster than walking pace.

▶ Activate or deactivate Automatic Door Lock.

In the following situations, there is a danger of being locked out when the function is activated:

- The vehicle is being towed or pushed.
- The vehicle is being tested on a roller dynamometer.

Power closing function

⚠ **WARNING** Risk of becoming trapped when the doors close automatically

Body parts or objects can become trapped, causing injuries.

▶ Ensure that no body parts or objects are in the closing area.

▶ Automatic closing of the doors can be canceled by pulling the outer or inner door handle.

If you push the door into the lock to the first detent position, the power closing function will automatically pull the door into the lock.

ⓘ Automatic closing of the doors may be triggered if the vehicle is locked from the outside, or during pulling away.

Locking/unlocking the vehicle with the emergency key

Unlocking a left-hand vehicle door with the mechanical key

ⓘ If you unlock and open the driver's door with the emergency key, this triggers the burglar alarm system.

ⓘ If you unlock the driver's door with the emergency key, the trunk lid will not be unlocked.

Vehicles without KEYLESS-GO

- Remove the emergency key (→ page 130).

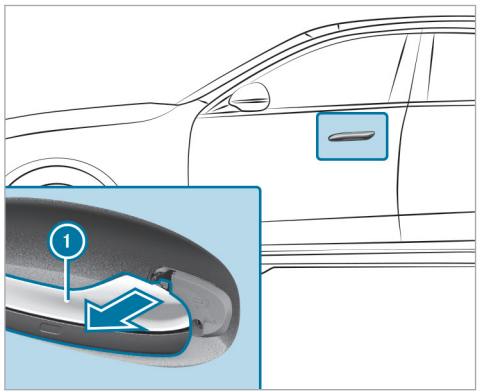

- Pull and hold door handle (1).

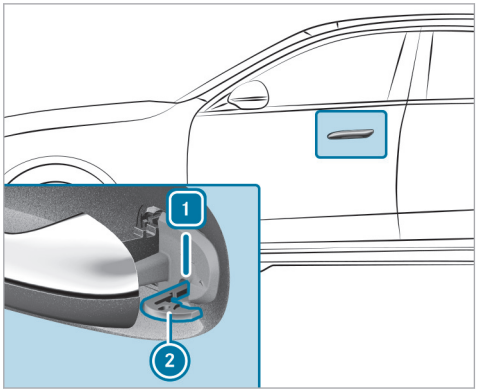

- Insert emergency key (2) into the lock cylinder as shown.
- Turn emergency key (2) counter-clockwise to position [1].
- Turn emergency key (2) back to its starting position.
- Remove emergency key (2) and release door handle (1).

Vehicles with KEYLESS-GO

- Remove the emergency key (→ page 130).

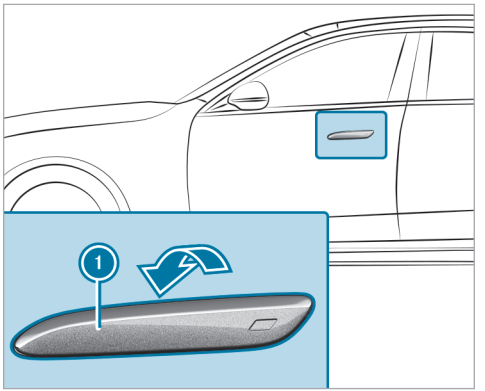

If the door handle is retracted:

- Insert a flat, non-metallic object behind door handle (1) from above and pry it slightly outward.

- Reach behind door handle (1) from below, pull it outward to the pressure point and hold it there.

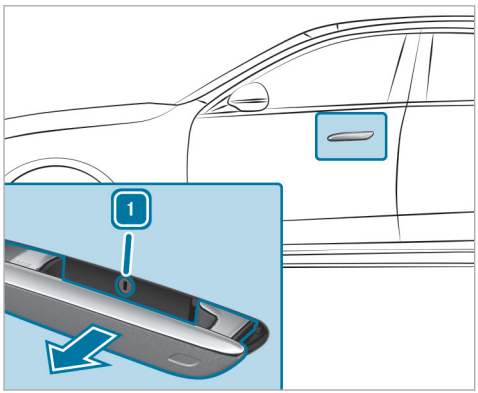

If the door handle is extended:

- Pull door handle (1) outward to the pressure point and hold it there.
- Insert the emergency key into the lock cylinder.
- Turn the emergency key counter-clockwise to position 1.
- Forcefully pull door handle (1) outward past the pressure point.
- Turn the emergency key back to its starting position.
- Remove the emergency key and release the door handle.

You can watch an animation on this topic via the following link:

Locking the doors

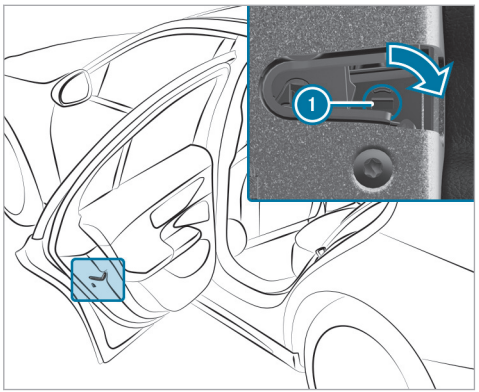

- Insert a suitable object, e.g. the emergency key, into opening (1) on the door lock.
- **To lock the left-hand side of the vehicle:** turn the emergency key clockwise as far as it will go.

- **To lock the right-hand side of the vehicle:** turn the emergency key counter-clockwise as far as it will go.

If the locked door is then closed, it can no longer be opened from the outside.

Trunk

Opening the trunk lid

DANGER Risk of exhaust gas poisoning

Combustion engines emit poisonous exhaust gases such as carbon monoxide. Exhaust gases can enter the vehicle interior if the trunk lid is open when the engine is running, especially if the vehicle is in motion.

- Always switch off the engine before opening the trunk lid.
- Never drive with the trunk lid open.

NOTE Damage to the trunk lid by obstacles above the vehicle

The trunk lid swings upwards when it is opened.

- Therefore, make sure that there is sufficient clearance above the trunk lid.

- Pull the trunk lid handle.
- **Vehicles with HANDS-FREE ACCESS:** make a kicking movement with your foot below the bumper (→ page 147).

Vehicles with trunk lid convenience closing

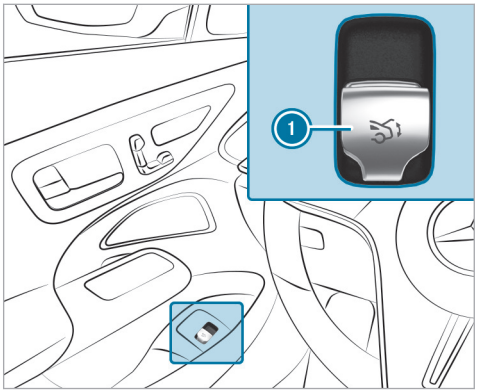

- Pull remote operating switch (1) until the trunk lid opens.

or

- Press and hold the button on the key.
- If the trunk lid is stopped in an intermediate position, pull it upwards. Release it as soon as it begins to open.

- With the trunk lid opening height restriction activated, manually pull the stopped trunk lid upwards.

If an obstacle obstructs the trunk lid during the automatic opening process, blockage detection will stop the trunk lid. The automatic blockage detection function is only an aid and is not a substitute for your attentiveness.

Closing the trunk lid

WARNING Risk of injury from unsecured items in the vehicle

If objects, luggage or loads are not secured or not secured sufficiently, they could slip, tip over or be thrown around and thereby hit vehicle occupants.

There is a risk of injury, particularly in the event of sudden braking or a sudden change in direction.

- Always stow objects in such a way that they cannot be thrown around.
- Before the journey, secure objects, luggage or loads against slipping or tipping over.

Observe the notes on loading the vehicle.

Notes on closing the trunk lid: your vehicle is equipped with automatic SmartKey Recognition. If a key belonging to the vehicle is detected in the vehicle, the trunk lid will not be locked and will pop open again.

Note that the trunk lid will not be locked if the following situation occurs:

- You have locked the vehicle and close the trunk lid while a key belonging to the vehicle is inside the vehicle.

  and

- A second key belonging to the vehicle is not detected outside the vehicle.

Automatic SmartKey Recognition is only an aid and is not a substitute for your attentiveness.

- Before locking, ensure that at least one key belonging to the vehicle is outside the vehicle.
- **To close the trunk lid:** pull the trunk lid downwards using the handle recess and push it closed.

ⓘ **Vehicles with trunk lid convenience closing:** if you lightly push the trunk lid closed, the power closing function will automatically pull the trunk lid into the lock.

Vehicles with trunk lid convenience closing

WARNING Risk of becoming trapped during automatic closing of the trunk lid

Parts of the body could become trapped. There may be people in the closing area.

- Make sure that nobody is in the vicinity of the closing area.
- Use one of the following options to stop the closing process:
  - Press the button on the SmartKey.
  - Press or pull the remote operating switch on the driver's door.
  - Press the closing or locking button on the trunk lid.

- Pull the trunk lid handle.

Vehicles with HANDS-FREE ACCESS: it is also possible to stop the closing process by making a kicking movement below the rear bumper.

- ▶ Pull the trunk lid handle. Release it as soon as it begins to close.
- ▶ If the trunk lid is stopped in an intermediate position, push it downwards.
  The trunk lid will continue to close.

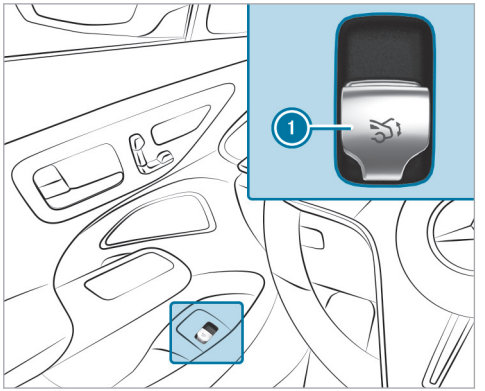

▶ Push remote operating switch (1) until the trunk lid is fully closed.

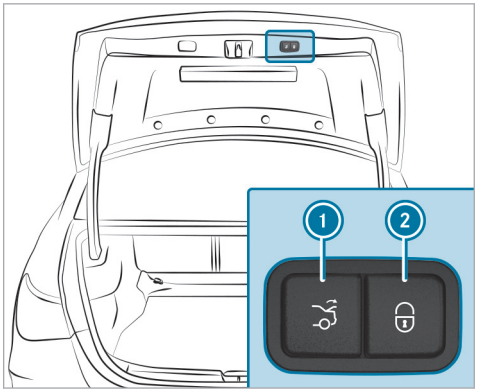

▶ Press closing button (1) on the trunk lid.

Vehicles with KEYLESS-GO

- ▶ Press locking button (2) on the trunk lid.
  If a key is detected outside the vehicle, the trunk lid will close and the vehicle will be locked.

ⓘ **Vehicles with Digital Vehicle Key:** this also applies to the Digital Vehicle Key if the function is activated and the Digital Vehicle Key is connected to the vehicle.

▶ With the trunk lid completely open, press and hold the [button] button on the key. The key must be in the vicinity of the vehicle.

Vehicles with HANDS-FREE ACCESS

▶ With the trunk lid completely open, make a kicking movement with your foot below the bumper (→ page 147).

Trunk lid automatic reversing function

The trunk lid is equipped with automatic blockage detection with a reversing function. If an obstacle obstructs the trunk lid during the automatic closing process, it will automatically open again. The automatic reversing function is only an aid and is not a substitute for your attentiveness.

▶ During the closing process, make sure that no body parts are in the closing area.

⚠ **WARNING** Risk of becoming trapped despite reversing function

The reversing function will not react:

- to soft, light and thin objects, e.g. fingers
- towards the end of the closing procedure

In these situations in particular, the reversing function cannot prevent someone being trapped.

▶ Ensure that no body parts are in the closing area.

▶ If someone is trapped, use one of the following options:
  - Press the [button] button on the SmartKey.
  - Press the remote operating switch on the driver's door.
  - Press the closing or locking button on the trunk lid.
  - Pull the trunk lid handle.

HANDS-FREE ACCESS function

With HANDS-FREE ACCESS, you can open, close or stop the trunk lid by performing a kicking movement under the rear bumper. The transmission must be in position [P] for this.

The kicking movement triggers the opening or closing process alternately.

- If you stop the trunk lid opening process with a kicking movement, the trunk lid will be closed with the next kicking movement.
- If you stop the trunk lid closing process with a kicking movement, the trunk lid will be opened with the next kicking movement.

The trunk lid can only be closed with HANDS-FREE ACCESS in the following situations:

- If the vehicle is switched on and the SmartKey's unlocking function has been set so that unlocking will only unlock the driver's door (→ page 129).
- If the vehicle was locked centrally from the inside (→ page 138).

Observe the notes when opening (→ page 144) and closing (→ page 145) the trunk lid.

ⓘ A warning tone sounds while the trunk lid is opening or closing.

⚠ **WARNING** Risk of burns caused by a hot exhaust system

The vehicle exhaust system can become very hot. If you use HANDS-FREE ACCESS, you could burn yourself by touching the exhaust system.

► Always ensure that you only make a kicking movement within the detection range of the sensors.

! **NOTE** Damage to the vehicle caused by unintentionally opening the trunk lid or a door

- When using an automatic car wash
- When using a high pressure cleaner

► Deactivate the function of the SmartKey in these situations.

or

► Make sure that the SmartKey is at a minimum distance of 10 ft (3 m) (power washer) or 20 ft (6 m) (automatic car wash) away from the vehicle.

Vehicles with Digital Vehicle Key:

! **NOTE** Vehicle damage due to unintentional opening of the trunk lid or a door

- during use of an automatic car wash
- during use of a high-pressure cleaner

► In these situations, switch off the digital vehicle key.

or

► Make sure the key is at least 10 ft (3 m) (pressure washer) or 20 ft (6 m) (car wash) away from the vehicle.

When making the kicking movement, make sure that your footing is firm. You could otherwise lose your balance, e.g. on ice.

Observe the following notes:

- The SmartKey is behind the vehicle.

  If the SmartKey is not recognized:

  - Hold the SmartKey in your hand.

    or

  - Ensure that the SmartKey function is activated (→ page 57).
- **Vehicles with Digital Vehicle Key:** the Digital Vehicle Key is behind the vehicle.
- Stand at least 12 in (30 cm) away from the vehicle while performing the kicking movement.
- Do not touch the bumper while making the kicking movement.
- Do not carry out the kicking movement too slowly.
- The kicking movement must be towards the vehicle and back again.

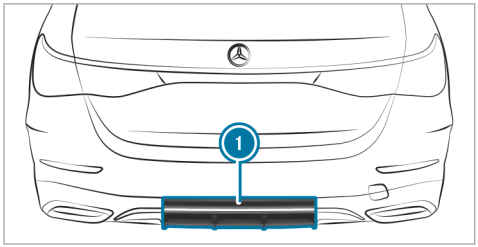

(1) Detection range of the sensors

If several consecutive kicking movements are not successful, wait ten seconds.

System limits

The system may be impaired or may not function in the following cases:

- The sensors are dirty, e.g. due to road salt or snow.
- The kicking movement is made using a prosthetic leg.

The trunk lid could be opened or closed unintentionally in the following situations:

- A person's arms or legs are moving in the sensor detection range, e.g. when polishing the vehicle or picking up objects.
- Objects are moved or placed behind the vehicle, e.g. the hose of a fuel dispenser, a charging cable or luggage
- Clamping straps, tarp or other coverings are pulled over the bumper.
- A protective mat with a length reaching over the loading sill down into the detection range of the sensors is used.
- The protective mat is not secured correctly.

Deactivate the function of the SmartKey (→ page 57) or do not carry the SmartKey about your person in such situations.

You can watch an animation on this topic via the following link:

Switching separate trunk locking on or off

Multimedia system:

→ ⌂ ▸▸ Settings ▸▸ Vehicle ▸▸ Open/Close

Switching separate trunk locking on

- ▶ Select Block Trunk Access.
- ▶ Create a PIN.
- ▶ Confirm the PIN with OK.
- ▶ Enter the PIN again and confirm it.
  The trunk will remain locked if you unlock the vehicle centrally.

ⓘ If an accident has been detected, the trunk will unlock even if separate locking is switched on.

Switching separate trunk locking off

- ▶ Select Block Trunk Access.
- ▶ Enter the PIN.
  If the PIN is correct, separate trunk locking will be switched off and the PIN deleted.

Unlocking and opening the trunk from inside with the emergency release

Requirements

- The 12 V vehicle battery is connected and charged.

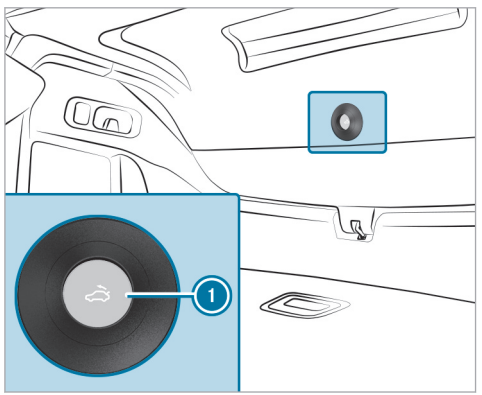

▶ Press emergency release button (1) briefly.

Activating/deactivating the trunk lid opening height restriction

Multimedia system:

↳ ⌂ ▸▸ Settings ▸▸ Vehicle ▸▸ Open/Close

▶ Switch Opening Height Limiter on or off.

This function prevents the trunk lid from hitting a low garage ceiling, for example.

Side windows

Opening and closing the side windows

⚠ WARNING Risk of entrapment when opening a side window

When opening a side window, parts of the body could be drawn in or become trapped between the side window and window frame.

▶ When opening, make sure that nobody is touching the side window.

▶ If someone is trapped, release the button immediately or pull it in order to close the side window again.

⚠ WARNING Risk of becoming trapped when closing a side window

When closing a side window, body parts could be trapped in the closing area in the process.

▶ When closing, make sure that no body parts are in the closing area.

▶ If someone is trapped, release the button immediately or press the button in order to reopen the side window.

⚠ WARNING Risk of becoming trapped when children operate the side windows

Children could become trapped if they operate the side windows, particularly when unattended.

▶ Activate the child safety lock for the rear passenger compartment side windows.

- When leaving the vehicle, always take the SmartKey with you and lock the vehicle.
- Never leave children unattended in the vehicle.

Requirements:

- The power supply or the vehicle has been switched on.

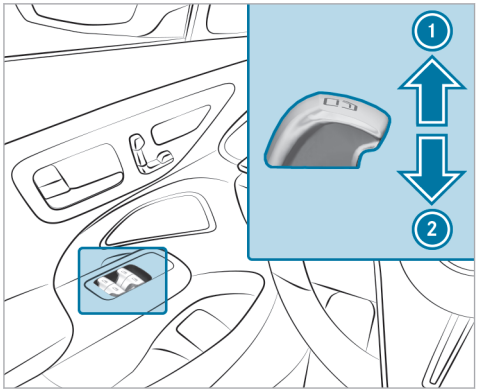

1 Closing
2 Opening

The buttons on the driver's door take precedence.

- **To start automatic operation:** press the button beyond the pressure point or pull and release it.
- **To interrupt automatic operation:** press or pull the button again.

F214 0032 13

When the vehicle is switched off, you can continue to operate the side windows.

This function is available for around four minutes or until a front door is opened.

Automatic reversing function of the side windows

If an obstacle impedes a side window during the closing process, the side window will open again automatically. The automatic reversing function is only an aid and is not a substitute for your attentiveness.

- During the closing process, make sure that no body parts are in the closing area.

WARNING Risk of becoming trapped despite there being reversing protection on the side window

The reversing function does not react:

- To soft, light and thin objects, e.g. fingers.
- During resetting.

The reversing function cannot prevent someone from becoming trapped in these situations.

- ▶ During the closing process, make sure that no body parts are in the closing area.
- ▶ If someone becomes trapped, press the button to open the side window again.

Convenience opening (ventilating the vehicle before starting a journey)

WARNING Risk of entrapment when opening a side window

When opening a side window, parts of the body could be drawn in or become trapped between the side window and window frame.

- ▶ When opening, make sure that nobody is touching the side window.
- ▶ Release the button immediately if somebody becomes trapped.

Requirements

- The SmartKey is in the immediate vicinity of the vehicle.

- ▶ Press and hold the button on the SmartKey.

  The following functions will be performed:
  - The vehicle will be unlocked.
  - The side windows will be opened.
  - The panoramic sliding sunroof will be opened.
  - The driver's seat ventilation will be switched on

ⓘ If the roller sunblind of the panoramic sliding sunroof is closed, the roller sunblind will be opened first.

- ▶ **To interrupt convenience opening:** release the button.
- ▶ **To continue convenience opening:** press and hold the button again.

Convenience closing (closing the vehicle from outside)

WARNING Risk of entrapment due to not paying attention during convenience closing

When the convenience closing feature is operating, parts of the body could become trapped in the closing area of the side window and the sliding sunroof.

- ▶ When the convenience closing feature is operating, monitor the entire closing process and make sure that no body parts are in the closing area.

Requirements

- The SmartKey is in the immediate vicinity of the vehicle.

- ▶ Press and hold the button on the SmartKey.

  The following functions will be performed:
  - The vehicle will be locked.
  - The side windows will be closed.

- The panoramic sliding sunroof will be closed.

▶ **To interrupt convenience closing:** release the button.

▶ **To continue convenience closing:** press and hold the button again.

ⓘ Convenience closing also functions with KEYLESS-GO (→ page 139).

Resolving problems with the side windows

⚠ **WARNING** Risk of becoming trapped or fatally injured if reversing protection is not activated

If you close a side window again immediately after it has been blocked, the side window will close with increased or maximum force. The reversing function is then not active and body parts may become trapped.

▶ Make sure that no parts of the body are in the closing area.

▶ To stop the closing process, release the button or press the button again to reopen the side window.

A side window cannot be closed and you cannot see the cause.

▶ Check to see whether any objects are in the window guide.

▶ Adjust the side windows.

Adjusting the side windows

If a side window is obstructed during closing and reopens again immediately:

▶ Immediately after this, pull and hold the corresponding button again until the side window has closed and hold the button for at least one more second (re-adjustment).
The side window will be closed without the automatic reversing function.

If the side window is obstructed again and reopens again immediately:

▶ Immediately after this, pull and hold the corresponding button again until the side window has closed and hold the button for at least one more second (follow-up adjustment).
The side window will be closed without the automatic reversing function.

The side windows cannot be opened or closed using the convenience opening feature.

Possible causes are:

- The key battery is weak or discharged.

▶ Check the battery using the indicator lamp (→ page 128).

▶ Replace the key battery, if necessary (→ page 130).

Sliding sunroof

Opening and closing the sliding sunroof

ⓘ The term "sliding sunroof" refers to the panorama roof with power tilt/sliding panel.

WARNING Risk of becoming trapped when the sliding sunroof is being opened and closed

Body parts may become trapped in the range of movement.

- During the opening and closing process, make sure that no body parts are in the sweep of the sliding sunroof.
- If someone is trapped, release the control panel immediately.

or

- Touch the control panel during automatic operation.
  The opening/closing process will be stopped.

WARNING Risk of becoming trapped if the sliding sunroof is operated by children

Children operating the sliding sunroof could get caught in the moving parts, particularly if unattended.

- Never leave children unattended in the vehicle.
- When leaving the vehicle, always take the key with you and lock the vehicle.

WARNING Risk of becoming trapped when the roller sunblind is being opened and closed

Body parts may become trapped between the roller sunblind and frame or sliding roof.

- During the opening or closing process, make sure that no body parts are in the roller sunblind's range of movement.
- If someone is trapped, release the control panel immediately.

or

- Touch the control panel during automatic operation.
  The opening/closing process will be stopped.

NOTE Malfunction due to snow and ice

Snow and ice may cause the sliding sunroof to malfunction.

- Open the sliding sunroof only if it is free of snow and ice.

NOTE Damage caused by protruding objects

Objects that protrude from the sliding sunroof may damage the seals.

- Do not allow anything to protrude from the sliding sunroof.

NOTE Damage to panorama roof with power tilt/sliding panel caused by roof luggage rack

If the panorama roof with power tilt/sliding panel is opened when a roof luggage rack is installed, the panorama roof with power tilt/sliding panel may be damaged by the roof luggage rack.

- Do not open the panorama roof with power tilt/sliding panel if a roof luggage rack is installed.

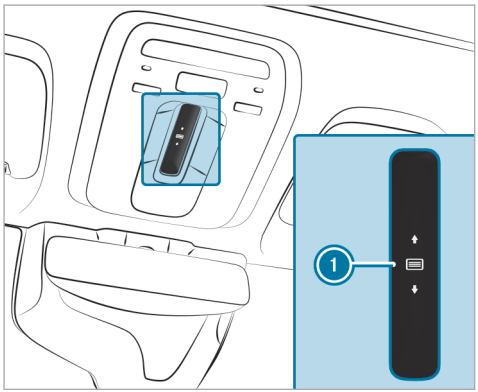

The sliding sunroof and the roller sunblind are operated using control panel 1.

The panorama roof with power tilt/sliding panel can be operated only when the roller sunblind is open.

- **To open:** swipe backwards across control panel 1 and hold it.
- **To close:** swipe forwards across control panel 1 and hold it.
- **To raise or lower:** press control panel 1 briefly.
- **To start automatic operation:** swipe forwards or backwards across control panel 1.
- **To cancel automatic operation:** press control panel 1 again.
  The opening/closing process will be stopped.

Automatic reversing function of the sliding sunroof

If an obstacle obstructs the sliding sunroof during the closing process, the sliding sunroof will open again automatically. The automatic reversing function is only an aid and is not a substitute for your attentiveness.

- During the closing process, make sure that no body parts are in the closing area.

⚠ WARNING Risk of becoming trapped despite reversing function

The reversing function will not react:

- To soft, light and thin objects, e.g. fingers.
- Towards the end of the closing procedure.
- During resetting.

- During the closing process, make sure that no body parts are in the closing area.
- If someone is trapped, release the control panel immediately.

or

- Touch the control panel during automatic closing.
  The closing process will be stopped.

Automatic reversing function of the roller sunblind

If an obstacle obstructs the roller sunblind during the closing process, the roller sunblind will open again automatically. The automatic reversing function is only an aid and is not a substitute for your attentiveness.

- When closing the roller sunblind, make sure that no body parts are in the range of movement.

⚠ WARNING Risk of becoming trapped despite reversing function

In particular, the reversing function does not react to soft, light and thin objects, e.g. fingers.

- When closing the roller sunblind, make sure that no body parts are in the range of movement.
- If someone is trapped, release the control panel immediately.

or

- Touch the control panel during automatic closing.
  The closing process will be stopped.

Automatic functions of the sliding sunroof

ⓘ The term "sliding sunroof" refers to the panorama roof with power tilt/sliding panel.

Rain closing function when driving
Vehicles with a panorama roof with power tilt/sliding panel: if it starts to rain, the raised sliding sunroof will automatically be lowered while the vehicle is in motion.

Automatic lowering function
Vehicles with a panorama roof with power tilt/sliding panel: if the sliding sunroof is raised at the rear, it will automatically be lowered slightly at higher speeds. At low speeds, it will be raised again automatically.

⚠ WARNING Risk of becoming trapped by automatic lowering of the sliding sunroof

At higher speeds, the raised sliding sunroof will automatically be lowered slightly at the rear.

- Make sure that nobody reaches into the sliding sunroof's range of movement while the vehicle is in motion.
- If someone becomes trapped, touch the control panel.

Rectifying problems with the sliding sunroof

⚠ WARNING Risk of becoming trapped or fatal injuries when the sliding sunroof is closed again

If you close the sliding sunroof again immediately after it has been blocked or reset, the sliding sunroof will close with increased or maximum force.

There is a risk of becoming trapped or even of fatal injuries!

- Make sure that no parts of the body are in the closing area.
- If someone is trapped, release the control panel immediately.

or

- Touch the control panel during automatic closing.
  The closing process will be stopped.

The sliding sunroof cannot be closed and you cannot see the cause.

ⓘ The term "sliding sunroof" refers to the panorama roof with power tilt/sliding panel.

If the sliding sunroof is obstructed during closing and reopens again slightly:

- Immediately after automatic reversing, swipe forwards across the control panel (→ page 153) and hold it until the sliding sunroof is closed.
  The sliding sunroof will be closed with increased force.

If the sliding sunroof is obstructed again and opens again slightly:

- Repeat the previous step.
  The sliding sunroof will be closed again with increased force.

The sliding sunroof or the roller sunblind is not operating smoothly.

- Reset the sliding sunroof and the roller sunblind.

Resetting the sliding sunroof and the roller sunblind

- Swipe forwards across the control panel (→ page 153) and hold it repeatedly until the sliding sunroof is completely closed.
- Swipe across the control panel and hold it for another second.
- Swipe across and hold the control panel until the roller sunblind is fully closed.
- Swipe across the control panel and hold it for another second.
- Use automatic operation to fully open and then close the sliding sunroof.

Roller sun blinds

Extending the rear side window roller sunblinds

! **NOTE** Damage to the inertia reel due to it snapping back

If suddenly snapped back, the inertia reel may be damaged.

- Always move the roller sun blind by hand.
- Do not drive with the roller sun blind hooked in and rear side windows opened at the same time.

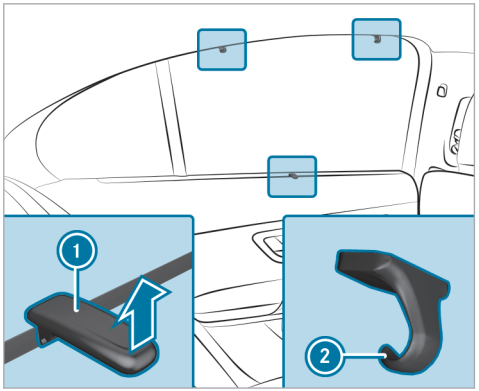

- Pull the roller sunblind out by tab (1) and hook it onto brackets (2) at the top of the window.

Extending or retracting the rear window roller sunblind

WARNING Risk of becoming trapped when extending or retracting the roller sunblind

Body parts may become trapped in the roller sunblind's range of movement.

- Ensure there are no body parts in the range of movement.
- If someone becomes trapped, briefly press the button again.
  The opening or closing process will briefly be stopped. The roller sunblind will then return to its starting position.

NOTE Damage caused by objects

Objects can cause the roller sunblind to malfunction.

- Do not place any objects on the rear shelf.
- Ensure that the roller sunblind can move freely.

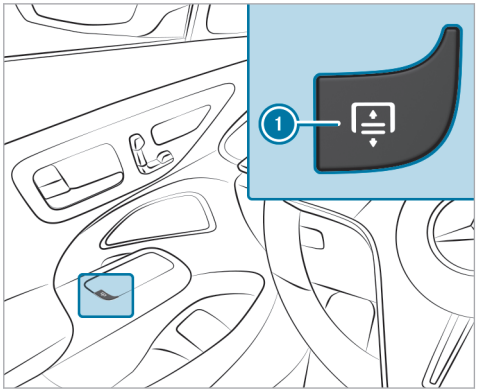

- **To extend or retract:** press button (1).

Anti-theft protection

Function of the immobilizer

The immobilizer prevents your vehicle from being started without the correct key.

This also applies to the Digital Vehicle Key.

The immobilizer is automatically activated when the vehicle is switched off, and deactivated when the vehicle is switched on.

When leaving the vehicle, always take the key with you and lock the vehicle. Anyone can start the vehicle if a valid key has been left inside the vehicle.

ⓘ In the event the engine cannot be started (yet the vehicle's battery is charged), the system is not operational. Contact an authorized Mercedes-Benz Center or call 1-800-FOR-MERCedes (in the USA) or 1-800-387-0100 (in Canada).

ATA (anti-theft alarm system)

Function of the ATA system

If the ATA system is armed, a visual and audible alarm is triggered in the following situations:

- When a door is opened
- When the trunk lid is opened
- When the hood is opened

- When interior protection is triggered (→ page 160)
- When the tow-away alarm is triggered (→ page 159)

ⓘ **Vehicles with Digital Vehicle Key:** the ATA system works with the Digital Vehicle Key in the same way as with the conventional vehicle key.

The ATA system is armed automatically after approximately ten seconds in the following situations:

- After you lock the vehicle with the key
- After you lock the vehicle using KEYLESS-GO
- After you lock the vehicle with the NFC function (**vehicles with Digital Vehicle Key**)

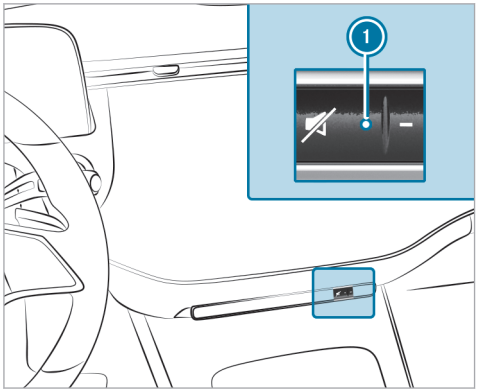

Indicator lamp 1 flashes when the ATA system is armed.

The ATA system is deactivated automatically in the following situations:

- After you unlock the vehicle with the key
- After you unlock the vehicle using KEYLESS-GO
- After you unlock the vehicle with the NFC function (**vehicles with Digital Vehicle Key**)
- After you press the start/stop button with the key in the marked space (→ page 237)

Deactivating the ATA

▶ Press the [ ], [ ] or [ ] button on the key.

or

▶ Press the start/stop button with the key in the stowage compartment (→ page 237)

▶ **Vehicles with Digital Vehicle Key:** press the start/stop button with the Digital Vehicle Key in the marked space (→ page 235).

Deactivating the alarm using KEYLESS-GO

▶ With the key outside the vehicle, touch the inner surface of the door handle.
This also applies to the Digital Vehicle Key.

Function of the tow-away alarm

ⓘ This function may not be available in all countries.

An audible and visual alarm is triggered if an alteration to your vehicle's angle of inclination is detected while the tow-away alarm is armed.

The tow-away alarm is automatically armed after about 60 seconds:

- after you lock the vehicle with the key
- after you lock the vehicle using KEYLESS-GO

  This also applies to the Digital Vehicle Key.
- after you lock the vehicle with the NFC function (**vehicles with Digital Vehicle Key**)

The tow-away alarm is armed only when the following components are closed:

- Doors
- Trunk lid

The tow-away alarm is automatically deactivated:

- after you press the [🔓] or [🔓] button on the key
- after you press the start/stop button with the key in the marked space (→ page 237)
- after you press the start-stop button with the Digital Vehicle Key in the marked space **(Vehicles with Digital Vehicle Key)** (→ page 235)
- after you unlock the vehicle using KEYLESS-GO

  This also applies to the Digital Vehicle Key.
- after you unlock the vehicle with the NFC function (**vehicles with Digital Vehicle Key**)
- when you are using HANDS-FREE ACCESS

Information on collision detection when the vehicle is parked (→ page 271).

Arming/deactivating tow-away protection

Multimedia system:

→ [⌂] ▸▸ Settings ▸▸ Vehicle ▸▸ Opening/closing ▸▸ Vehicle Protection

▶ Arm or deactivate Tow-away Protection.

Tow-away protection will be activated again in the following cases:

- The vehicle is unlocked again.
- A door is opened.
- The vehicle is locked again.

Function of interior protection

ⓘ This function may not be available in all countries.

When the interior motion sensor is activated, a visual and audible alarm is triggered if movement is detected in the vehicle interior.

Interior protection is armed automatically after approximately ten seconds:

- after you lock the vehicle with the key
- after you lock the vehicle using KEYLESS-GO

  This also applies to the Digital Vehicle Key.
- after you lock the vehicle with the NFC function (**vehicles with Digital Vehicle Key**)

Interior protection is armed only when the following components are closed:

- Doors
- Trunk lid

Interior protection is automatically deactivated:

- after you press the or button on the key
- after you press the start/stop button with the key in the marked space (→ page 237)
- after you press the start-stop button with the Digital Vehicle Key in the marked space **(Vehicles with Digital Vehicle Key)** (→ page 235)
- after you unlock the vehicle using KEYLESS-GO

  This also applies to the Digital Vehicle Key.
- after you unlock the vehicle with the NFC function (**vehicles with Digital Vehicle Key**)
- when you are using HANDS-FREE ACCESS

The following situations can lead to a false alarm:

- When there are moving objects such as mascots in the vehicle interior
- If a side window is open
- If the panorama roof with power tilt/sliding panel is open

Arming/deactivating interior protection

Multimedia system:

Settings Vehicle Opening/closing Vehicle Protection

▶ Arm or deactivate Interior Motion Sensor.

Interior protection will be armed again in the following cases:

- The vehicle is unlocked again.
- A door is opened.
- The vehicle is locked again.

Notes on the correct driver's seat position

WARNING Risk of accident due to adjusting the vehicle settings while the vehicle is in motion

You could lose control of the vehicle in the following situations in particular:

- If you adjust the driver's seat, the head restraint, the steering wheel or the mirror while the vehicle is in motion
- If you fasten your seat belt while the vehicle is in motion

▶ Before starting the vehicle: in particular, adjust the driver's seat, head restraint, steering wheel and mirror, and fasten your seat belt.

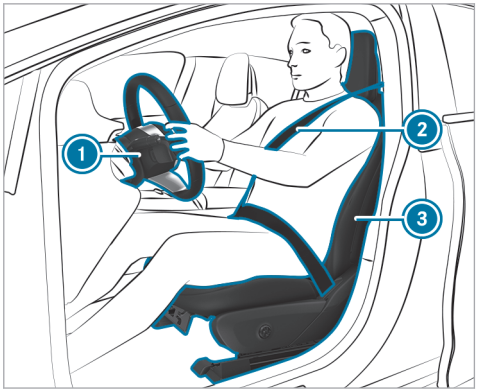

Ensure the following when adjusting steering wheel (1), seat belt (2) and driver's seat (3):

- You are sitting as far away from the driver's air bag as possible, taking the following points into consideration:
- You are sitting in an upright position
- Your thighs are slightly supported by the seat cushion
- Your legs are not fully extended and you can depress the pedals properly
- The back of your head is supported at eye level by the center of the head restraint
- You can hold the steering wheel with your arms slightly bent
- You can move your legs freely
- You can see all the displays on the driver display clearly
- You have a good overview of the traffic conditions
- Observe the notes on correctly fastening the seat belt (→ page 97).

Notes on grab handles

WARNING Risk of injury due to excessive load on the grab handles

If you apply your full body weight to the grab handle or pull it abruptly, the grab handle may be damaged or come loose from its anchorage. This may result in injuries.

- Use the grab handles only to stabilize the seating position or to assist in getting in and out of the seat.

Seats

Adjusting the front seat manually and electrically (with Seat Comfort Package)

WARNING Risk of becoming trapped if the seats are adjusted by children

Children could become trapped if they adjust the seats, particularly when unattended.

- When leaving the vehicle, always take the SmartKey with you and lock the vehicle.
- Never leave children unattended in the vehicle.

You can adjust the seats when the vehicle is switched off.

WARNING Risk of becoming trapped when adjusting the seat

When you adjust a seat, you or other vehicle occupants could become trapped, e.g. on the seat guide rail.

- When adjusting a seat, make sure that no one has any part of their body within the sweep of the seat.

This also applies to the Digital Vehicle Key.

Observe the safety notes on "Air bags" and "Children in the vehicle".

WARNING Risk of accident due to the driver's seat not being engaged

The driver's seat may move unexpectedly while driving.

This could cause you to lose control of the vehicle.

- Always make sure that the driver's seat is engaged before starting the vehicle.

WARNING Risk of accident due to adjusting the vehicle settings while the vehicle is in motion

You could lose control of the vehicle in the following situations in particular:

- If you adjust the driver's seat, the head restraint, the steering wheel or the mirror while the vehicle is in motion
- If you fasten your seat belt while the vehicle is in motion

- Before starting the vehicle: in particular, adjust the driver's seat, head restraint, steering wheel and mirror, and fasten your seat belt.

WARNING Risk of becoming trapped if the seat height is adjusted carelessly

If you adjust the seat height carelessly, you or other vehicle occupants could be trapped and thereby injured.

Children in particular could accidentally press the electrical seat adjustment buttons and become trapped.

- While moving the seats, make sure that hands or other body parts do not get under the lever assembly of the seat adjustment system.

⚠ WARNING Risk of injury due to head restraints not being installed or being adjusted incorrectly

If head restraints have not been installed or have not been adjusted correctly, there is an increased risk of injury in the head and neck area, e.g. in the event of an accident or when braking.

- Always drive with the head restraints installed.
- Before driving off, make sure for every vehicle occupant that the center of the head restraint supports the back of the head at about eye level.

Adjust the head restraint fore-and-aft position so that it is as close as possible to the back of your head.

⚠ WARNING Risk of injury or death due to an incorrect seat position

The seat belt does not offer the intended level of protection if you have not moved the seat backrest to an almost vertical position.

In particular, you could slip beneath the seat-belt and become injured.

- Adjust the seat properly before beginning your journey.
- Always ensure that the seat backrest is in an almost vertical position and that the shoulder belt is routed across the center of your shoulder.

⚠ WARNING Risk of potentially fatal injuries due to objects trapped under the front passenger seat

Objects trapped under the front passenger seat may interfere with the function of the automatic front passenger air bag shutoff or damage the system.

- Do not stow any objects under the front passenger seat.
- When the front passenger seat is occupied, ensure that no objects have become trapped beneath the front passenger seat.

! NOTE Damage to the seats when adjusting

The seats may be damaged by objects when adjusting the seats.

- When adjusting the seats, make sure that there are no objects in the footwell, under or behind the seats.

! NOTE Damage to the headliner when making adjustments

The headliner may be damaged when adjusting the front seats.

- Adjust the head restraints first before adjusting the height of the respective seat.

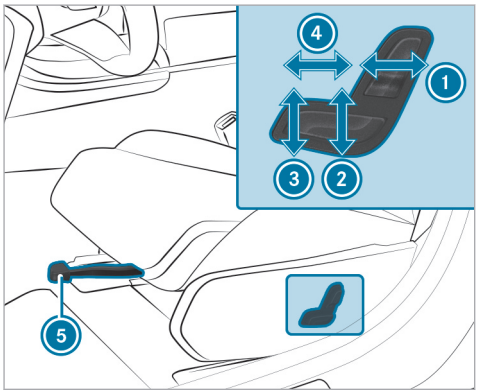

1. Seat backrest inclination
2. Seat height
3. Seat cushion inclination
4. Seat cushion length
5. Seat fore-and-aft position

- **To adjust the seat fore-and-aft position:** lift lever 5 and slide the seat into the desired position.
- Make sure that the seat is engaged.

Adjusting the front seat with fully electric adjustment

WARNING Risk of becoming trapped if the seats are adjusted by children

Children could become trapped if they adjust the seats, particularly when unattended.

- When leaving the vehicle, always take the SmartKey with you and lock the vehicle.
- Never leave children unattended in the vehicle.

This also applies to the Digital Vehicle Key.

You can adjust the seats when the vehicle is switched off.

WARNING Risk of becoming trapped when adjusting the seat

When you adjust a seat, you or other vehicle occupants could become trapped, e.g. on the seat guide rail.

- When adjusting a seat, make sure that no one has any part of their body within the sweep of the seat.

Observe the safety notes on "Air bags" and "Children in the vehicle".

WARNING Risk of accident due to adjusting the vehicle settings while the vehicle is in motion

You could lose control of the vehicle in the following situations in particular:

- If you adjust the driver's seat, the head restraint, the steering wheel or the mirror while the vehicle is in motion
- If you fasten your seat belt while the vehicle is in motion

- Before starting the vehicle: in particular, adjust the driver's seat, head restraint, steering wheel and mirror, and fasten your seat belt.

⚠ WARNING Risk of becoming trapped if the seat height is adjusted carelessly

If you adjust the seat height carelessly, you or other vehicle occupants could be trapped and thereby injured.

Children in particular could accidentally press the electrical seat adjustment buttons and become trapped.

- While moving the seats, make sure that hands or other body parts do not get under the lever assembly of the seat adjustment system.

⚠ WARNING Risk of injury due to head restraints not being installed or being adjusted incorrectly

If head restraints have not been installed or have not been adjusted correctly, there is an increased risk of injury in the head and neck area, e.g. in the event of an accident or when braking.

- Always drive with the head restraints installed.
- Before driving off, make sure for every vehicle occupant that the center of the head restraint supports the back of the head at about eye level.

Adjust the head restraint fore-and-aft position so that it is as close as possible to the back of your head.

⚠ WARNING Risk of injury or death due to an incorrect seat position

The seat belt does not offer the intended level of protection if you have not moved the seat backrest to an almost vertical position.

In particular, you could slip beneath the seat-belt and become injured.

- Adjust the seat properly before beginning your journey.
- Always ensure that the seat backrest is in an almost vertical position and that the shoulder belt is routed across the center of your shoulder.

⚠ WARNING Risk of potentially fatal injuries due to objects trapped under the front passenger seat

Objects trapped under the front passenger seat may interfere with the function of the automatic front passenger air bag shutoff or damage the system.

- Do not stow any objects under the front passenger seat.
- When the front passenger seat is occupied, ensure that no objects have become trapped beneath the front passenger seat.

NOTE Damage to the seats when adjusting

The seats may be damaged by objects when adjusting the seats.

- When adjusting the seats, make sure that there are no objects in the footwell, under or behind the seats.

The switches for adjusting the seats do not move. You will therefore receive no direct feedback on the switch while pressing the switch. Feedback is provided only by the movement of the seat.

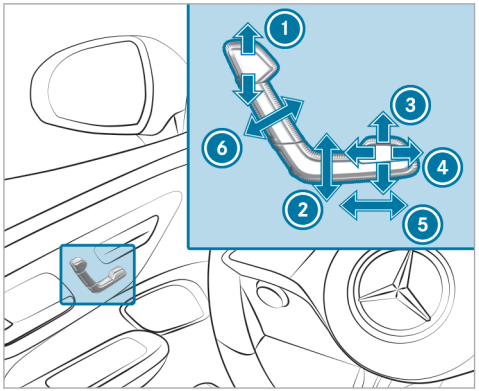

1. Head restraint height
2. Seat height
3. Seat cushion inclination
4. Seat cushion length
5. Seat fore-and-aft position
6. Seat backrest inclination

- Save the settings with the memory function (→ page 178).

F214 0032 13

ⓘ The head restraint height will be adjusted automatically when you adjust the seat height or the seat fore-and-aft position.

Adjusting the 4-way lumbar support

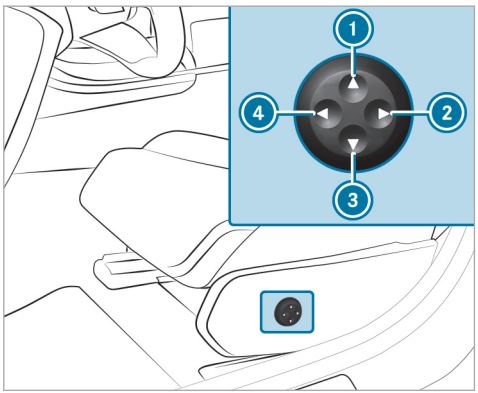

1. Higher
2. Softer

③ Lower
④ Firmer

▶ Use buttons ① to ④ to adjust the contour of the backrest.

Head restraints

Adjusting the head restraints on the front seats

⚠ WARNING Risk of accident due to adjusting the vehicle settings while the vehicle is in motion

You could lose control of the vehicle in the following situations in particular:

- If you adjust the driver's seat, the head restraint, the steering wheel or the mirror while the vehicle is in motion
- If you fasten your seat belt while the vehicle is in motion

▶ Before starting the vehicle: in particular, adjust the driver's seat, head restraint, steering wheel and mirror, and fasten your seat belt.

⚠ WARNING Risk of injury due to incorrectly adjusted head restraints

If head restraints have not been adjusted correctly, there is an increased risk of injury in the head and neck area, e.g. in the event of an accident or sudden braking.

▶ Before driving off, make sure for every vehicle occupant that the center of the head restraint supports the back of the head at about eye level.

Adjust the head restraint fore-and-aft position so that it is as close as possible to the back of your head.

Seats with manual and electric seat adjustment

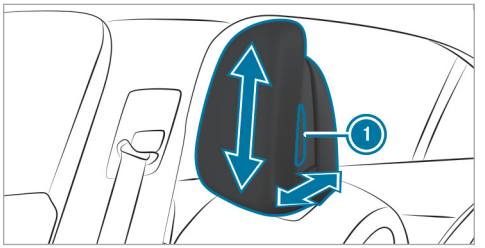

▶ Take hold of the head restraint on both sides and press release knob ①.
▶ **To move forwards or backwards:** pull the head restraint forwards or push it backwards.
▶ **To move upwards or downwards:** push the head restraint upwards or downwards.
▶ Let go of release knob ①.

Seats with electric seat adjustment

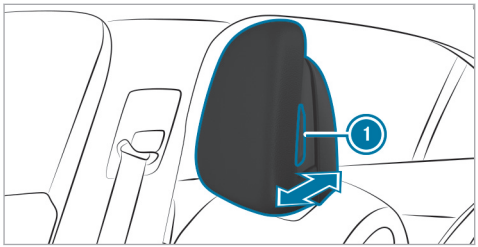

- Take hold of the head restraint on both sides and press release knob (1).
- **To move forwards or backwards:** pull the head restraint forwards or push it backwards.
- Let go of release knob (1).
- **To move upwards or downwards:** adjust the head restraint using the buttons on the door operating unit (→ page 165).

Adjusting the head restraints of the rear seats manually

⚠ WARNING Risk of injury due to head restraints not being installed or being adjusted incorrectly

If head restraints have not been installed or have not been adjusted correctly, there is an increased risk of injury in the head and neck area, e.g. in the event of an accident or when braking.

- Always drive with the head restraints installed.
- Before driving off, make sure for every vehicle occupant that the center of the head restraint supports the back of the head at about eye level.

Adjust the head restraint fore-and-aft position so that it is as close as possible to the back of your head.

ⓘ Move all head restraints up at least to the first detent. If a head restraint is in the lowest, non-locked position, the respective seat must not be used.

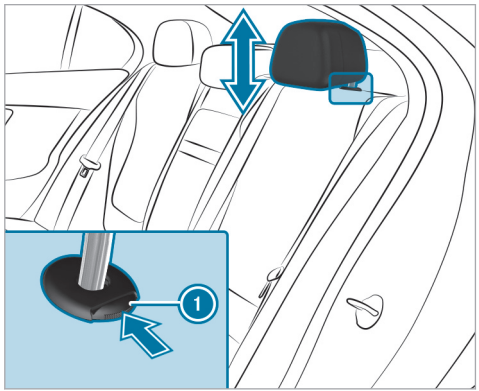

- **To raise:** push release knob (1) in the direction of the arrow and pull the head restraint up until it engages.
- **To lower:** press release knob (1) in the direction of the arrow and push the head restraint down until it engages.

Installing/removing the rear seat head restraints

WARNING Risk of injury due to head restraints not being installed or being adjusted incorrectly

If head restraints have not been installed or have not been adjusted correctly, there is an increased risk of injury in the head and neck area, e.g. in the event of an accident or when braking.

- Always drive with the head restraints installed.
- Before driving off, make sure for every vehicle occupant that the center of the head restraint supports the back of the head at about eye level.

Adjust the head restraint fore-and-aft position so that it is as close as possible to the back of your head.

Removing

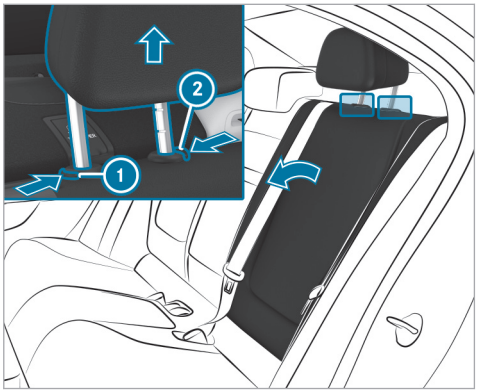

- Release the rear seat backrest and fold it forwards slightly (→ page 35).
- Press release knob (2) and pull the head restraint upwards as far as it will go. Release knob (1) will extend.
- Push both release knobs (1) and (2) at the same time in the direction of the arrow and pull out the head restraint.
- Fold the rear seat backrest back until it engages.

Installing

- Release the rear seat backrest and fold it forwards slightly (→ page 35).
- Insert the head restraint such that the notches on the bar are on the left when viewed in the direction of travel.
- Push the head restraint down until it engages.
- Fold the rear seat backrest back until it engages.

Configuring the seat adjustment

Multimedia system:

→ ⌂ ▸▸ Comfort ▸▸ Seat

Adjusting the air cushions

- In the corresponding menu, adjust the air cushions for Lumbar or Side Bolsters.

Setting the seat heating balance

- Select Heating Settings.
- Select Seat Heating Balance.
- Adjust the heat distribution for the desired seat.

Setting automatic seat adjustment

WARNING Risk of becoming trapped during adjustment of the driver's seat after calling up a driver profile

Selecting a user profile may trigger an adjustment of the driver's seat to the position saved under the user profile. You or other vehicle occupants could be injured in the process.

- Make sure that when the position of driver's seat is being adjusted using the multimedia system, no people or body parts are in the seat's range of movement.

If there is a risk of someone becoming trapped, immediately stop the adjustment process by:

- a) Pressing the warning message on the central display.

or

- b) Pressing a position button of the memory function or a seat adjustment switch in the driver's door.
The adjustment process is stopped.

Multimedia system:
→ ⌂ ▸▸ Comfort ▸▸ Seat ▸▸ Automatic Seat Positioning

Manually adjusting driver's seat and steering wheel position to body size

The vehicle calculates a suitable driver's seat and steering wheel position on the basis of the driver's body size and sets this directly.

- **To set the unit of measurement:** select cm or ft/in.
- Set the size using the scale.
- Select Start Positioning.
The driver's seat and steering wheel position are adjusted to the body size that has been set.

ⓘ You can also configure these settings via the Mercedes me user account for your user profile. By synchronizing the profiles in the vehicle and the Mercedes me connect profiles, you can carry over these settings for your vehicle. Further information about synchronizing user profiles (→ page 383).

ⓘ You can use the buttons (→ page 163) to change the position of the driver's seat and steering wheel set by the vehicle. You can set the outside mirrors to the correct position using the switch (→ page 216).

Overview of massage programs

ⓘ Depending on the vehicle equipment, different massage programs are available:

- Classic Massage: Relaxing back massage.
- Relaxing Massage: Relaxing back massage with increasing wave motions and then soothing movements.
- Wave Massage: Regenerating massage program via soothing waves across the back and in the seat cushion.

- Deep Wave Massage: Wave movements in the seat cushion can stimulate blood circulation and metabolism in the legs.
- Hot Stone Massage: A massage combined with heat. It starts with a massage of the back. In addition, warm pressure points become noticeable, starting in the pelvic area.
- Invigorating Massage: This massage is designed to maintain your health and alertness during long journeys. The activating stimulation including deliberately chosen breaks keeps you fit and awake during monotonous driving situations.

Selecting the massage program for the front seats

Multimedia system:

→ ⌂ ⏩ Comfort

- ▶ Select Massage.
- ▶ Select a massage program (→ page 171).
- ▶ Start the program for the required seat with ▶.
- ▶ **To set the massage intensity:** switch Intensive on or off.

ⓘ The availability of this function is dependent on the vehicle's equipment.

Resetting seat adjustment

Multimedia system:

→ ⌂ ⏩ Comfort ⏩ Seat

- ▶ Select Reset.
- ▶ Select ↺ for the desired seat.

Switching the seat heating on/off

⚠ **WARNING** Risk of burns due to repeatedly switching on the seat heating

Repeatedly switching on the seat heating can cause the seat cushion and seat backrest padding to become very hot.

In particular, the health of persons with limited temperature sensitivity or a limited ability to react to high temperatures may be affected or they may even suffer burn-like injuries.

- ▶ Do not repeatedly switch on the seat heating.

To protect against overheating, the seat heating may be temporarily deactivated after it has been switched on repeatedly.

! **NOTE** Damage to the seats caused by objects or documents when the seat heating is switched on

When the seat heating is switched on, overheating may occur due to objects or documents placed on the seats, e.g. seat cushions or child seats. This could cause damage to the seat surface.

- ▶ Make sure that no objects or documents are on the seats when the seat heating is switched on.

Requirements

- The power supply is switched on.

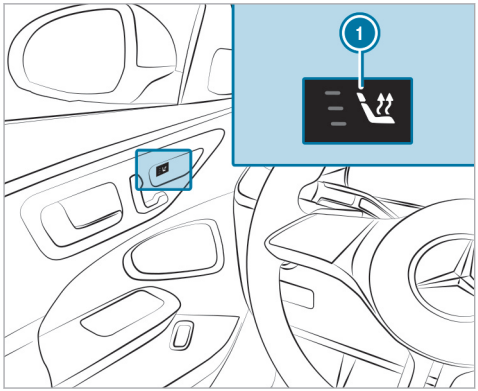

▶ Press button (1) for the respective seat repeatedly until the desired heating level is reached.
Depending on the heating level, up to three indicator lamps will light up. If all indicator lamps are off, the seat heating is switched off.

ⓘ The seat heating will automatically switch down from the three heating levels after around 8, 10 and 20 minutes until the seat heating is switched off.

ⓘ If you switch the power supply off and on again within 20 minutes, the previous setting of the seat heating for the driver's seat will remain active.

ⓘ You can set the heat distribution of the heated sections among the seat cushions and seat backrests of the front seats in the multimedia system (→ page 170).

Setting the panel heating

Multimedia system:

↳ ⌂ ▸▸ Comfort ▸▸ Seat ▸▸ Heating Settings ▸▸ Panel Heating

When the seat heating is switched on, the armrests can be heated.

▶ Switch the function for the desired seats on or off.

Switching the seat ventilation on/off

Requirements

- The power supply is switched on.

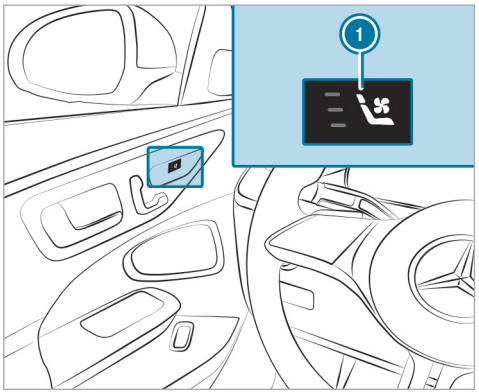

▶ Press button (1) for the respective seat repeatedly until the desired blower setting is reached.
Depending on the blower setting, up to three indicator lamps will light up. If all indicator

lamps are off, the seat ventilation is switched off.

ⓘ If you switch the power supply off and on again within 20 minutes, the previous seat ventilation setting for the driver's seat will remain active.

Steering wheel

Adjusting the steering wheel manually

⚠ **WARNING** Risk of accident due to adjusting the vehicle settings while the vehicle is in motion

You could lose control of the vehicle in the following situations in particular:

- If you adjust the driver's seat, the head restraint, the steering wheel or the mirror while the vehicle is in motion
- If you fasten your seat belt while the vehicle is in motion

▶ Before starting the vehicle: in particular, adjust the driver's seat, head restraint, steering wheel and mirror, and fasten your seat belt.

⚠ **WARNING** Risk of entrapment for children when adjusting the steering wheel

Children could injure themselves if they adjust the steering wheel.

▶ Never leave children unattended in the vehicle.

▶ When leaving the vehicle, always take the key with you and lock the vehicle.

Unlocking

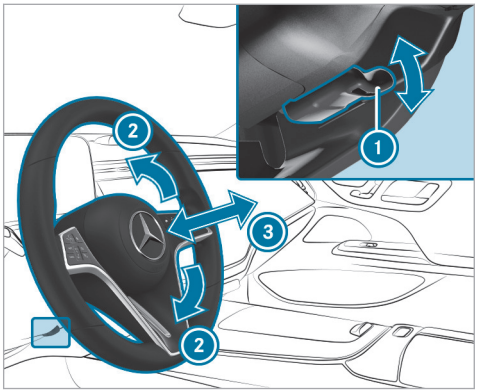

▶ Fold release lever ① down as far as it will go.

▶ Adjust height ② and distance ③ to the steering wheel.

Locking

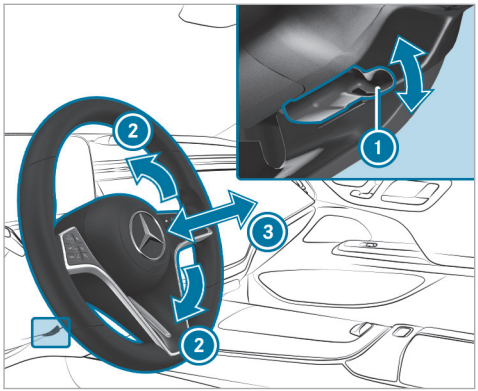

- Fold release lever (1) up as far as it will go.
- Check and make sure that the steering column is locked by moving the steering wheel.

Adjusting the steering wheel electrically

WARNING Risk of accident due to adjusting the vehicle settings while the vehicle is in motion

You could lose control of the vehicle in the following situations in particular:

- If you adjust the driver's seat, the head restraint, the steering wheel or the mirror while the vehicle is in motion
- If you fasten your seat belt while the vehicle is in motion

- Before starting the vehicle: in particular, adjust the driver's seat, head restraint, steering wheel and mirror, and fasten your seat belt.

WARNING Risk of entrapment for children when adjusting the steering wheel

Children could injure themselves if they adjust the steering wheel.

- Never leave children unattended in the vehicle.
- When leaving the vehicle, always take the key with you and lock the vehicle.

This also applies to the Digital Vehicle Key.
The steering wheel can be adjusted when the power supply is disconnected.

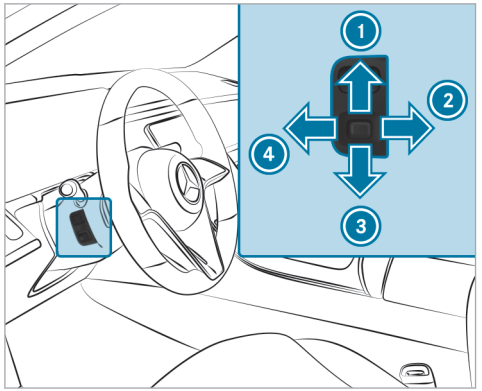

1 To move up
2 To move back
3 To move down
4 To move forward

▶ Save the settings with the memory function (→ page 178).

Decoupling the steering wheel heater from the seat heating

Requirements

- The power supply or the vehicle has been switched on.
- The steering wheel heater is linked to the seat heating.

Multimedia system:

→ ⌂ ▸▸ Comfort ▸▸ Seat ▸▸ Heating Settings

The function is active by default and the steering wheel heater is automatically activated and deactivated when the seat heating is switched on and off.

▶ Tap on Additional Steering Wheel Heating. The steering wheel heater will be decoupled from the seat heating.

Easy entry and exit feature

Using the easy entry and exit feature

⚠ **WARNING** Risk of accident when pulling away during the adjustment process of the easy entry and exit feature

You could lose control of the vehicle.

▶ Always wait until the adjustment process is complete before driving off.

Vehicles with memory function: you can stop the adjustment process by pressing one of the memory function position switches.

⚠ **WARNING** Risk of becoming trapped if children activate the easy entry and exit feature

Children could become trapped if they activate the easy entry and exit feature, particularly when unattended.

▶ Never leave children unattended in the vehicle.

▶ When leaving the vehicle, always take the key with you and lock the vehicle.

In order to use the easy entry and exit feature, the automatic seat adjustment function must have been switched on (→ page 171).

When the easy entry and exit feature is active, the steering wheel and driver's seat will move as follows:

- The steering wheel will move upwards.
- The driver's seat will move forward or backward to an ideal position for entering or exiting the vehicle.

This will occur in the following situations:

- You switch off the vehicle when the driver's door is open.
- You open the driver's door when the vehicle is switched off.

ⓘ The steering wheel will then move upwards only if it is not already as high as it will go. The driver's seat only moves forwards or backwards if it is not already in an ideal position for entering or exiting the vehicle.

The steering wheel and the driver's seat will move back to the last driving position in the following cases:

- You switch the power supply or the vehicle on when the driver's door is closed.
- You close the driver's door when the vehicle is switched on.

The last drive position will be saved when:

- You switch off the vehicle.
- **Vehicles with memory function:** you call up the seat settings via the memory function.

Vehicles with memory function: press one of the memory function position switches to stop the adjustment process.

Setting the easy entry and exit feature

Requirements:

- The automatic seat adjustment has been activated (→ page 171).

Multimedia system:

→ ⌂ ▸▸ Settings ▸▸ Vehicle ▸▸ Easy Entry And Exit Feature

▶ Select Steering Wheel & Seat, Steering Wheel Only or Off.

ⓘ If you are using an individual user profile, this information is used for the easy entry and exit feature. This will cause the driver's seat and steering wheel to move into the correct position automatically (→ page 380).

Memory function

Function of the memory function

⚠ **WARNING** Risk of an accident if the memory function is used while driving

If you use the memory function on the driver's side while driving, you could lose control of the vehicle as a result of the adjustments being made.

- Only use the memory function on the driver's side when the vehicle is stationary.

WARNING Risk of entrapment when adjusting the seat with the memory function

When the memory function adjusts the seat, you and other vehicle occupants – particularly children – could become trapped.

- During the adjusting process of the memory function, ensure that no body parts are in the area of movement of the seat or the steering wheel.
- If someone becomes trapped, press a preset position button or seat adjustment switch immediately.
The adjustment process is stopped.

WARNING Danger of entrapment when memory function is activated by children

When children activate the memory function, they can get trapped, especially if they are unsupervised.

- Never leave children unattended in the vehicle.
- When leaving the vehicle, always take the key with you and lock the vehicle.

You can use the memory function when the vehicle is switched off.
Seat adjustments for up to three people can be stored and called up using the memory function.

You can save the following settings for the front seat:

- Seat, backrest, head restraint position and contour of the seat backrest in the lumbar region
- Seat heating: distribution of the heated sections of the seat cushion and seat backrest
- Driver's side: steering wheel position and position of the outside mirrors on the driver's and front passenger sides
- Head-up display

Operating the memory function

WARNING Risk of an accident if the memory function is used while driving

If you use the memory function on the driver's side while driving, you could lose control of the vehicle as a result of the adjustments being made.

- Only use the memory function on the driver's side when the vehicle is stationary.

WARNING Danger of entrapment when memory function is activated by children

When children activate the memory function, they can get trapped, especially if they are unsupervised.

- Never leave children unattended in the vehicle.
- When leaving the vehicle, always take the key with you and lock the vehicle.

This also applies to the Digital Vehicle Key.

You can use the memory function when the vehicle is switched off.

Storing

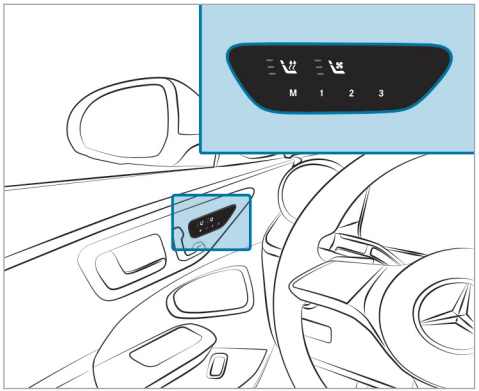

- Set the front seat, the steering wheel, the head-up display and the outside mirror to the desired position.
- Press the M button and then release it.
- Press one of the preset position buttons 1, 2 or 3 within three seconds.
An acoustic signal will sound. The settings are stored.

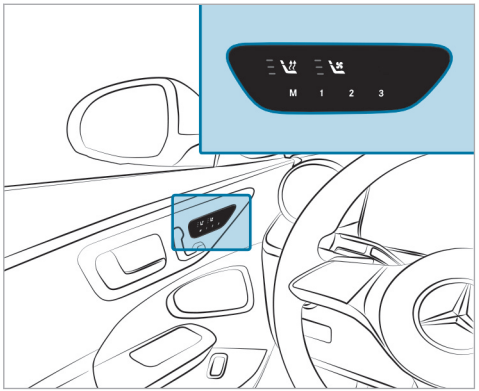

- **To call up:** press the preset position button 1, 2 or 3.
The seat will be moved to the stored position. After releasing the button, the front seat, outside mirror, head-up display and steering col-

umn will continue to move into the stored position automatically.

You can watch an animation on this topic via the following link:

Stowage areas

Notes on loading the vehicle

DANGER Risk of exhaust gas poisoning

Combustion engines emit poisonous exhaust gases such as carbon monoxide. Exhaust gases can enter the vehicle interior if the trunk lid is open when the engine is running, especially if the vehicle is in motion.

- Always switch off the engine before opening the trunk lid.
- Never drive with the trunk lid open.

Objects in the deployment area of an air bag may prevent the air bag from functioning correctly. Observe the notes on the air bags (→ page 110) .

WARNING Risk of injury from unsecured items in the vehicle

If objects, luggage or loads are not secured or not secured sufficiently, they could slip, tip over or be thrown around and thereby hit vehicle occupants.

There is a risk of injury, particularly in the event of sudden braking or a sudden change in direction.

- Always stow objects in such a way that they cannot be thrown around.
- Before the journey, secure objects, luggage or loads against slipping or tipping over.

WARNING Risk of injury due to objects being stowed incorrectly

If objects in the vehicle interior are stowed incorrectly, they can slide or be thrown around and hit vehicle occupants. In addition, cup holders, open storage spaces and mobile phone brackets cannot always retain all objects they contain.

There is a risk of injury, particularly in the event of sudden braking or a sudden change in direction.

- Always stow objects in such a way that they cannot be thrown around in such situations.
- Always make sure that objects do not protrude from storage spaces, parcel nets or storage nets.
- Close the lockable storage spaces before starting a journey.
- Always stow and secure heavy, hard, pointed, sharp-edged, fragile or bulky objects in the trunk.

WARNING Risk of accident from objects in the driver's footwell and front-passenger footwell

Objects in the driver's footwell and front-passenger footwell may impede pedal travel or block a depressed pedal.

This jeopardizes the operating and road safety of the vehicle.

- ▶ Stow all objects in the vehicle securely so that they cannot get into the driver's footwell or front-passenger footwell.
- ▶ Always install the floor mats securely and as prescribed in order to ensure that there is always sufficient clearance for the pedals.
- ▶ Do not use loose floor mats and do not lay multiple floor mats on top of one another.

Vehicles with automatic front-passenger air bag shutoff: Objects trapped under the front-passenger seat may interfere with the function of the automatic front-passenger air bag shutoff or damage the system. Please observe the notes on the function of automatic front-passenger air bag shutoff (→ page 101).

⚠ **WARNING** Risk of burns from the tailpipe and tailpipe trims

The exhaust tailpipe and tailpipe trims can become very hot. If you come into contact with these parts of the vehicle, you could burn yourself.

- ▶ Always be particularly careful around the tailpipe and the tailpipe trims and supervise children especially closely in this area.
- ▶ Allow vehicle parts to cool down before touching them.

ⓘ Leather is a natural product. It has natural surface properties, such as differences in structure, marks caused by growth and injury or subtle color differences. These surface properties are characteristics of leather and not material defects. Leather is also subject to a natural aging process during which the surface properties change.

The driving characteristics of your vehicle are dependent on the distribution of the load within the vehicle. You should bear the following in mind when loading the vehicle:

- Never exceed the gross vehicle weight rating or the gross axle weight rating for the vehicle (including occupants). The values are specified on the vehicle identification plate on the vehicle's B-pillar.
- The load must not protrude above the upper edge of the seat backrests.
- Always place the load behind unoccupied seats if possible.
- Secure the load using the cargo tie down rings and distribute the load evenly.

Notes on driving with a roof load

- Distribute the roof load and the load inside the vehicle evenly, placing heavy objects at the bottom. Also comply with the notes on loading the vehicle (→ page 180).
- Drive attentively, and avoid abrupt starts, braking and steering as well as rapid cornering.
- When transporting roof loads and when the vehicle is fully loaded or fully occupied, select drive programs E and C. These are designed to focus on stability (→ page 248).

Stowage spaces in the vehicle interior

Overview of the front storage compartments

WARNING Risk of injury due to objects being stowed incorrectly

If objects in the vehicle interior are stowed incorrectly, they can slide or be thrown around and hit vehicle occupants. In addition, cup holders, open storage spaces and mobile phone brackets cannot always retain all objects they contain.

There is a risk of injury, particularly in the event of sudden braking or a sudden change in direction.

- Always stow objects in such a way that they cannot be thrown around in such situations.
- Always make sure that objects do not protrude from storage spaces, parcel nets or storage nets.
- Close the lockable storage spaces before starting a journey.
- Always stow and secure heavy, hard, pointed, sharp-edged, fragile or bulky objects in the trunk.

Observe the notes on loading the vehicle.

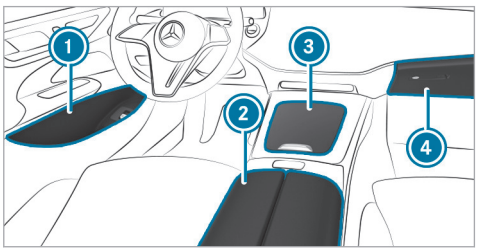

1. Stowage spaces in the doors
2. Stowage and telephone compartment beneath the armrest with USB ports
3. Storage compartment in the front center console, depending on vehicle equipment with cupholders, USB ports and charging module for wireless charging of mobile phones
4. Glove box

ⓘ The compartment under armrest 2 and the storage compartment in center console 3 are connected by a duct through which cables can be fed. Thus USB connection cables for connecting devices can be stowed in both compartments, for example.

ⓘ The rubber mat in the storage compartment in front center console 3 can be removed for cleaning with clean, lukewarm water. Please comply with the notes on caring for the interior (→ page 517).

Opening and closing the storage compartment in the front center console

WARNING Risk of injury due to objects being stowed incorrectly

If objects in the vehicle interior are stowed incorrectly, they can slide or be thrown around and hit vehicle occupants. In addition, cup holders, open storage spaces and mobile phone brackets cannot always retain all objects they contain.

There is a risk of injury, particularly in the event of sudden braking or a sudden change in direction.

- Always stow objects in such a way that they cannot be thrown around in such situations.
- Always make sure that objects do not protrude from storage spaces, parcel nets or storage nets.
- Close the lockable storage spaces before starting a journey.
- Always stow and secure heavy, hard, pointed, sharp-edged, fragile or bulky objects in the trunk.

Observe the notes on loading the vehicle.

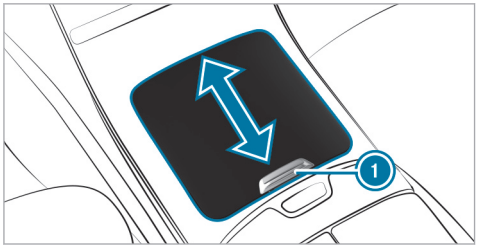

- **To open:** slide the cover of the storage compartment in the front center console all the way forwards in the direction of the arrow using handle (1).
- **To close:** briefly push handle (1) of the open cover of the storage compartment in the front center console forwards.
  The cover will automatically close the storage compartment in the front center console.

Locking/unlocking the glove box

WARNING Risk of injury due to objects being stowed incorrectly

If objects in the vehicle interior are stowed incorrectly, they can slide or be thrown around and hit vehicle occupants. In addition, cup holders, open storage spaces and mobile phone brackets cannot always retain all objects they contain.

There is a risk of injury, particularly in the event of sudden braking or a sudden change in direction.

- Always stow objects in such a way that they cannot be thrown around in such situations.
- Always make sure that objects do not protrude from storage spaces, parcel nets or storage nets.
- Close the lockable storage spaces before starting a journey.

- Always stow and secure heavy, hard, pointed, sharp-edged, fragile or bulky objects in the trunk.

Observe the notes on loading the vehicle.

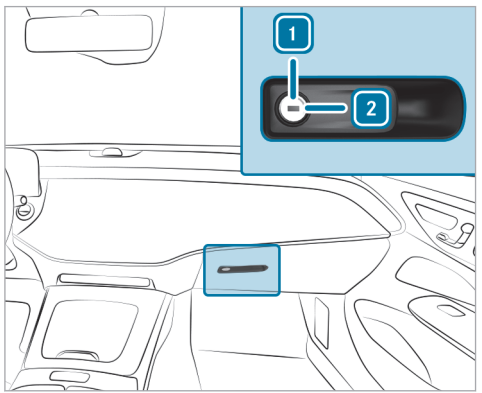

- Turn the emergency key a quarter turn clockwise [2] (to lock) or counter-clockwise [1] (to unlock).

Through-loading feature in the rear bench seat (EASY-PACK Quickfold)

Folding the rear seat backrests forward

WARNING Risk of becoming trapped when adjusting the seats

When you adjust a seat, you may trap yourself or a vehicle occupant.

- When adjusting a seat, make sure that no one has any body parts in the sweep of the seat.

WARNING Risk of an accident because the seat backrest is not engaged

The seat backrest may fold forwards.

There is a risk of the following, in particular:

- The vehicle occupant may be pressed against the seat belt. The seat belt cannot protect as intended and could cause additional injury.
- A child restraint system is no longer properly supported or properly positioned and may no longer fulfill its function as intended.
- The seat backrest cannot restrain objects or goods in the trunk or cargo compartment.

Always ensure that the seat backrest is engaged, especially:

- After the seat has been adjusted.
- After the cargo compartment enlargement has been folded forwards

Make sure that the red marking of the lock verification indicator is no longer visible. Otherwise, the seat backrest is not locked.

Always ensure that all vehicle occupants have their seat belts fastened correctly and are sitting properly. Particular attention must be paid to children.

Requirements

- The rear seat backrest head restraints are fully inserted.

- The rear armrest has been folded up.

Folding the rear outer seat backrests forward
You can fold the center and right seat backrests forwards separately.

The left seat backrest can be folded forwards only together with the center seat backrest.

If you no longer require the folded-down rear seat backrest as a load area, fold the backrest back into place.

▶ Ensure that the center seat backrest is in an upright position and locked to the left seat backrest (→ page 187).

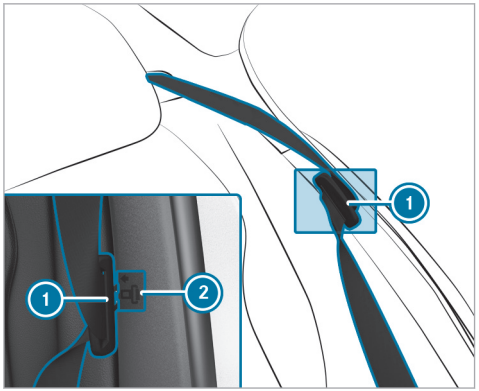

▶ Press the seat belt tongue of seat belt (1) into marked position (2).

▶ Move the driver's or front passenger seat forwards, if necessary.

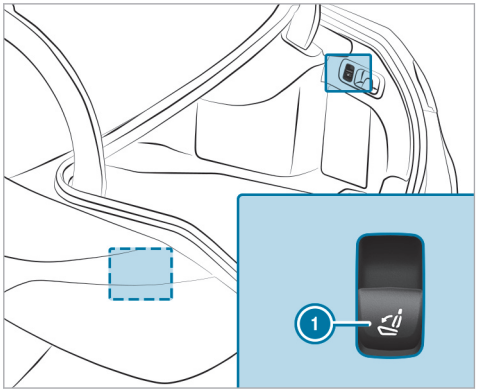

▶ **To fold down the left seat backrest:** pull briefly on left-hand button (1).
The left seat backrest folds forward together with the center seat backrest.

If the left seat backrest is not locked with the center seat backrest, this will be shown on the central display.

▶ **To fold down the right seat backrest:** pull briefly on right-hand button ①.
The right-hand seat backrest folds forwards.

ⓘ If you wish to fold only one of the outer seat backrests forwards, fold the right seat backrest forwards.

Folding the center rear seat backrest forwards separately

If you no longer require the folded-down seat backrest as a loading area, fold the seat backrest back into place.

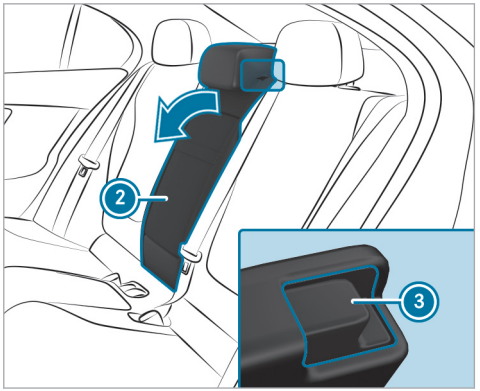

▶ Press release catch ③.
▶ Fold seat backrest ② forwards.

Folding the rear seat backrest back

⚠ WARNING Risk of becoming trapped when adjusting the seats

When you adjust a seat, you may trap yourself or a vehicle occupant.

▶ When adjusting a seat, make sure that no one has any body parts in the sweep of the seat.

⚠ WARNING Risk of an accident because the seat backrest is not engaged

The seat backrest may fold forwards.

There is a risk of the following, in particular:

- The vehicle occupant may be pressed against the seat belt. The seat belt cannot protect as intended and could cause additional injury.
- A child restraint system is no longer properly supported or properly positioned and may no longer fulfill its function as intended.
- The seat backrest cannot restrain objects or goods in the trunk or cargo compartment.

Always ensure that the seat backrest is engaged, especially:

- After the seat has been adjusted.
- After the cargo compartment enlargement has been folded forwards

Make sure that the red marking of the lock verification indicator is no longer visible. Otherwise, the seat backrest is not locked.

Always ensure that all vehicle occupants have their seat belts fastened correctly and are sitting properly. Particular attention must be paid to children.

NOTE Damage caused by trapping the seat belt when folding back the seat backrest

The seat belt could become trapped and thus damaged when the seat backrest is folded back.

- Make sure that the seat belt is not trapped when folding back the seat backrest.

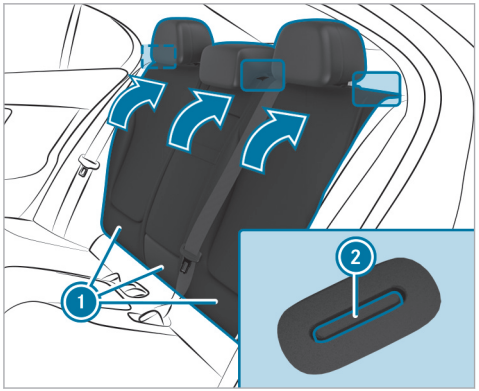

- Move the driver's or front passenger seat forwards, if necessary.
- Swivel seat backrest (1) back until it engages. If the seat backrest is not engaged and locked in place, red lock verification indicator (2) will be visible.

Locking and releasing the release catch of the center rear seat backrest

WARNING Risk of becoming trapped when adjusting the seats

When you adjust a seat, you may trap yourself or a vehicle occupant.

- When adjusting a seat, make sure that no one has any body parts in the sweep of the seat.

WARNING Risk of an accident because the seat backrest is not engaged

The seat backrest may fold forwards.

There is a risk of the following, in particular:

- The vehicle occupant may be pressed against the seat belt. The seat belt cannot protect as intended and could cause additional injury.
- A child restraint system is no longer properly supported or properly positioned and

may no longer fulfill its function as intended.
- The seat backrest cannot restrain objects or goods in the trunk or cargo compartment.

Always ensure that the seat backrest is engaged, especially:
- After the seat has been adjusted.
- After the cargo compartment enlargement has been folded forwards

If the seat backrests are not engaged and locked in place, the red lock verification indicators will be visible.

Always ensure that all vehicle occupants have their seat belts fastened correctly and are sitting properly. Particular attention must be paid to children.

You can lock the center seat backrest release catch if you want to secure the trunk against unauthorized access. The center seat backrest can then be folded forwards only together with the left seat backrest.

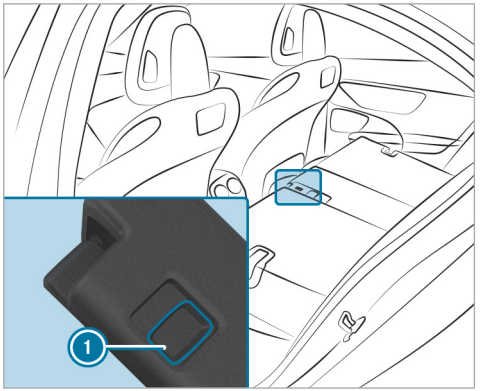

▶ **To lock or unlock:** slide catch (1) upwards or downwards.

Overview of the tie-down eyes

Observe the notes on loading the vehicle (→ page 180).

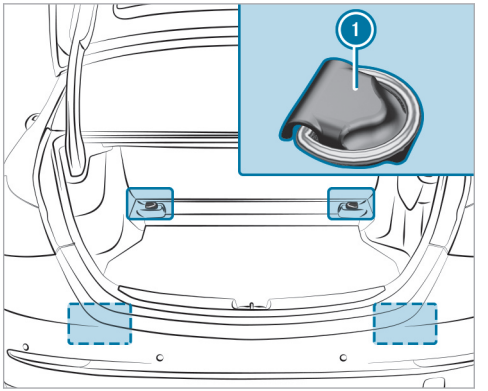

(1) Tie-down eyes

Overview of bag hooks

⚠ **WARNING** Risk of injury when using bag hooks with heavy objects

The bag hooks cannot restrain heavy objects or items of luggage.

Objects or items of luggage may be flung around and hit vehicle occupants.

- Only hang light objects on the bag hooks.
- Never hang hard, sharp-edged or fragile objects on the bag hooks.

Observe the notes on loading the vehicle (→ page 180).

The bag hook can bear a maximum load of 6.6 lbs (3 kg). Do not use it to secure a load.

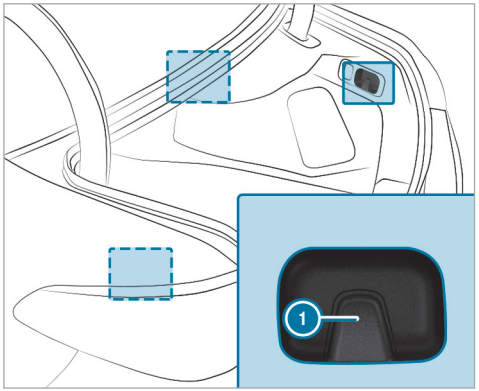

1 Bag hook

Attaching the parcel net

WARNING Risk of injury due to objects being stowed incorrectly

If objects in the vehicle interior are stowed incorrectly, they can slide or be thrown around and hit vehicle occupants. In addition, cup holders, open storage spaces and mobile phone brackets cannot always retain all objects they contain.

There is a risk of injury, particularly in the event of sudden braking or a sudden change in direction.

- Always stow objects in such a way that they cannot be thrown around in such situations.
- Always make sure that objects do not protrude from storage spaces, parcel nets or storage nets.
- Close the lockable storage spaces before starting a journey.
- Always stow and secure heavy, hard, pointed, sharp-edged, fragile or bulky objects in the trunk.

Observe the notes on loading the vehicle.
The parcel net is available for all vehicles except hybrid vehicles.

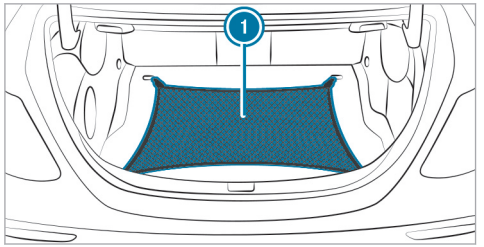

- Fold up the tie-down eyes.
- Hook parcel net (1) into the front and rear tie-down eyes.

Opening the stowage space under the trunk floor

! NOTE Damage to the handle in the trunk floor

If the handle in the trunk is left protruding, the handle may be damaged.

- Before closing the trunk lid, detach the handle and press it down closed again.

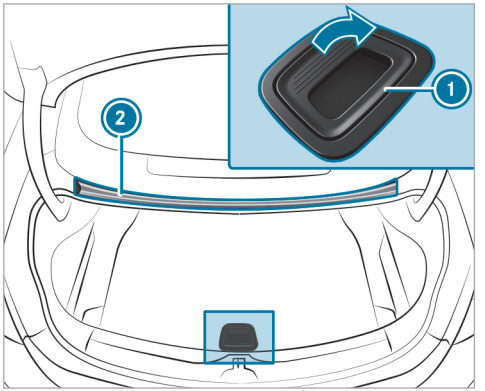

- Pull handle (1) up and hook it on to top seal (2) of the cargo compartment.

Attaching a roof luggage rack

⚠ WARNING Risk of accident due to exceeding the maximum roof load

The vehicle center of gravity and the usual driving characteristics as well as the steering and braking characteristics alter.

If you exceed the maximum roof load, the driving characteristics, as well as steering and braking, will be greatly impaired.

- Never exceed the maximum roof load and adjust your driving style.

You will find information on the maximum roof load in the "Technical data" section in the printed Operator's Manual.

! NOTE Vehicle damage due to failure to observe the maximum permissible clearance height

If the vehicle height exceeds the maximum permissible clearance height, the roof and other vehicle parts may be damaged.

- Please observe the maximum clearance height indicated.
- If the vehicle exceeds the permissible clearance height, do not drive in.
- Take the modified vehicle height into account in the case of roof superstructures or other carrier systems.

NOTE Damage to the panorama roof with power tilt/sliding panel due to non-approved roof luggage racks

The panorama roof with power tilt/sliding panel may be damaged by the roof luggage rack if you attempt to open it when using a roof luggage rack not tested and approved for Mercedes-Benz.

- When a roof luggage rack is installed, open the panorama roof with power tilt/sliding panel only if this has been tested and approved for Mercedes-Benz.

The panorama roof with power tilt/sliding panel may be raised to allow ventilation of the vehicle interior.

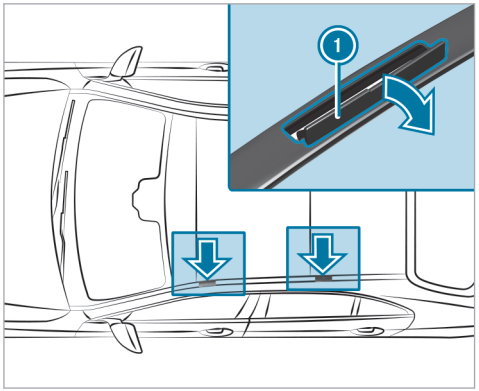

NOTE Damage to the covers

The covers may be damaged and scratched when being opened.

- Do not use metallic or hard objects.

- Fold covers (1) carefully upwards in the direction of the arrow.
- Secure the roof luggage rack to the fastening points beneath covers (1).
- Comply with the installation instructions of the roof luggage rack manufacturer.
- Secure the load on the roof luggage rack.

Cup holder

Installing or removing the cup holder in the center console

WARNING - Risk of accident or injury when using the cup holder while the vehicle is moving

The cup holder cannot secure containers while the vehicle is moving.

If you use a cup holder while the vehicle is moving, the container may be flung around and liquids may be spilled. The vehicle occupants may come into contact with the liquid and if it is hot, they could be scalded. You could be distracted from traffic conditions and you may lose control of the vehicle.

- Only use the cup holder when the vehicle is stationary.
- Only use the cup holder for containers of the right size.
- Close the container, particularly if the liquid is hot.

WARNING Risk of injury due to objects being stowed incorrectly

If objects in the vehicle interior are stowed incorrectly, they can slide or be thrown around and hit vehicle occupants. In addition, cup holders, open storage spaces and mobile phone brackets cannot always retain all objects they contain.

There is a risk of injury, particularly in the event of sudden braking or a sudden change in direction.

- Always stow objects in such a way that they cannot be thrown around in such situations.
- Always make sure that objects do not protrude from storage spaces, parcel nets or storage nets.
- Close the lockable storage spaces before starting a journey.
- Always stow and secure heavy, hard, pointed, sharp-edged, fragile or bulky objects in the trunk.

Depending on the vehicle version, a cup holder can be used in the storage compartment in the front center console,

The cup holder can be removed for cleaning. Observe the notes on loading the vehicle (→ page 180).

Installing the cup holder

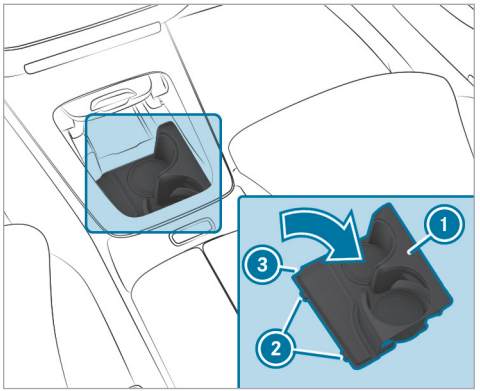

- Insert the cup holder starting with corner (3) and swing it in to place two lugs (2) in the recesses of the trim.
- Swing the cup holder into the compartment and press housing (1) down until it locks into place.

Removing the cup holder

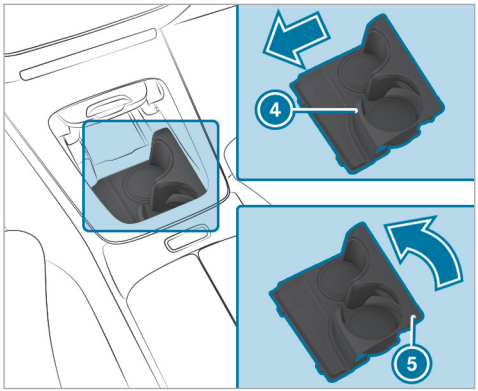

- Push the side wall of rear beverage compartment (4) to the left until the cup holder releases.
- Swing out the cup holder with corner (5) to the front left.
- Reinsert the cup holder after cleaning.

Installing/removing the insert mats

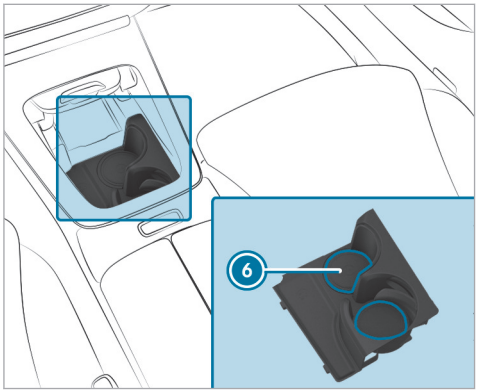

Insert mats (6) in the cup holder beverage compartments can be removed for cleaning.

- **To remove:** Use a suitable tool to push the insert mats out of their mounting from the rear of the removed cup holder.
- **To install:** Press the insert mats into the cup holder brackets until they snap into place.

Using the cup holder

ⓘ Check whether the beverage container is held firmly by the cup holder. Some beverage containers will not be secured adequately in the cup holder due to their shape or size.

The side wall of the front beverage compartment can be extended and retracted manually.

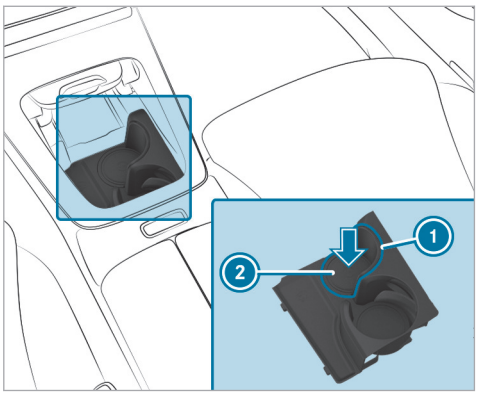

▶ Gently push a beverage container into the bottom (2) of the beverage compartment.
The side wall automatically extends to the left to secure the beverage container.

Alternatively, you can extend the side wall of the beverage compartment by pressing lightly on grooved surface (1).

Retracting the side wall

When the front beverage compartment is not in use, the side wall can be retracted manually. The cup holder's holding function will then no longer be available.

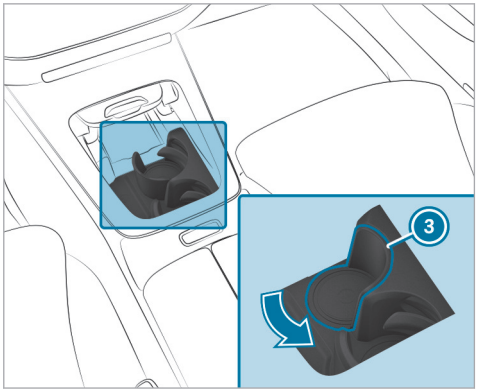

▶ Push the side wall back in the direction of the arrow until it engages in correct position (3).

Sockets

Using the 12 V socket in the front passenger footwell

Requirements

- Connect only devices up to a maximum of 180 W (15 A).

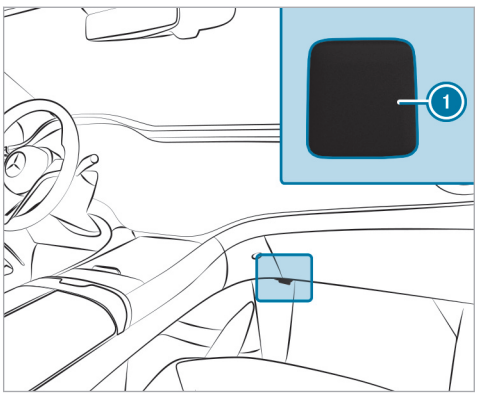

12 V socket in the front passenger footwell

- ▶ Fold up the cap of socket (1).
- ▶ Insert the plug of the device.
- ▶ Make sure that no cables are running through or secured in the deployment area of an air bag when you use the socket. Also observe the notes on the air bags (→ page 110).

Using USB ports

Depending on its equipment, the vehicle has the following USB ports:

- In the stowage compartment in the front center console
- In the stowage compartment under the front armrest
- In the rear center console

You can charge a USB device, such as a mobile phone, at the USB ports using a suitable charging cable. Depending on the vehicle equipment, the devices can be charged with up to 20 V (5 A) when the vehicle is switched on.

Wireless charging of the mobile phone and connection with the exterior antenna

Notes on wirelessly charging a mobile phone

⚠ WARNING Risk of injury due to objects being stowed incorrectly

If objects in the vehicle interior are stowed incorrectly, they can slide or be thrown around and hit vehicle occupants. In addition, cup holders, open stowage spaces and mobile phone receptacles cannot always retain all objects within.

There is a risk of injury, particularly in the event of sudden braking or a sudden change in direction.

- ▶ Always stow objects so that they cannot be thrown around in such situations.
- ▶ Always make sure that objects do not protrude from stowage spaces, parcel nets or stowage nets.
- ▶ Close the lockable stowage spaces before starting a journey.
- ▶ Always stow and secure heavy, hard, pointed, sharp-edged, fragile or bulky objects in the trunk/cargo compartment.

Observe the notes on loading the vehicle.

⚠ WARNING Risk of fire from placing objects in the mobile phone storage compartment

Placing other objects in the mobile phone storage compartment could constitute a fire hazard.

- ▶ Apart from a mobile phone, do not place any other objects in the mobile phone storage compartment, especially those made of metal.

! NOTE Damage to objects caused by placing them in the mobile phone storage compartment

If objects are placed in the mobile phone storage compartment, these may be damaged by electromagnetic fields.

- Do not place credit cards, storage media, ski passes or other objects sensitive to electromagnetic fields in the mobile phone storage compartment.

NOTE Damage to the mobile phone stowage compartment caused by liquids

If liquids enter the mobile phone stowage compartment, the compartment may be damaged.

- Ensure that no liquids enter the mobile phone stowage compartment.

Always observe the notes for persons with electronic medical aids (→ page 87).

- Depending on the vehicle equipment, the mobile phone is connected to the vehicle's exterior antenna via the charging module.
- The charging function and wireless connection of the mobile phone to the vehicle's exterior antenna are available only if the vehicle is switched on.
- Small mobile phones may not be able to be charged in every position of the mobile phone stowage compartment.
- Large mobile phones that do not rest flat in the mobile phone stowage compartment may not be able to be charged or connected with the vehicle's exterior antenna.
- The mobile phone may heat up during the charging process. This may also depend on the applications (apps) currently open in the background.
- To ensure more efficient charging and connection with the vehicle's exterior antenna, remove the protective cover from the mobile phone. Protective covers that are necessary for wireless charging are an exception.

Wirelessly charging a mobile phone in the front

WARNING Risk of injury due to objects being stowed incorrectly

If objects in the vehicle interior are stowed incorrectly, they can slide or be thrown around and hit vehicle occupants. In addition, cup holders, open storage spaces and mobile phone brackets cannot always retain all objects they contain.

There is a risk of injury, particularly in the event of sudden braking or a sudden change in direction.

- Always stow objects in such a way that they cannot be thrown around in such situations.
- Always make sure that objects do not protrude from storage spaces, parcel nets or storage nets.
- Close the lockable storage spaces before starting a journey.
- Always stow and secure heavy, hard, pointed, sharp-edged, fragile or bulky objects in the trunk.

Observe the notes on loading the vehicle.

Requirements

- The mobile phone is suitable for wireless charging.

A list of compatible mobile phones can be found at: https://www.mercedes-benz-mobile.com/

It is possible to wirelessly charge a mobile phone in the front stowage compartment of the vehicle's center console.

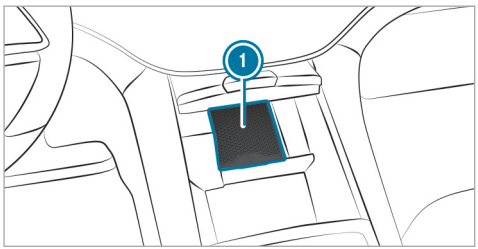

Wirelessly charging a mobile phone in the front stowage compartment

- Place the mobile phone as close to the center of mat (1) as possible with the display facing upwards.

When the charging symbol is shown in the multimedia system, the mobile phone is being charged.

In addition, malfunctions during the mobile phone's charging process are shown in the multimedia system display.

ⓘ The mat can be removed for cleaning, e.g. using clean, lukewarm water.

Installing and removing floor mats

⚠ **WARNING** Risk of accident due to objects in the driver's footwell

Objects in the driver's footwell may impede pedal travel or block a depressed pedal.

This jeopardizes the operating and road safety of the vehicle.

- Stow all objects in the vehicle securely so that they cannot get into the driver's footwell.
- Always install the floor mats securely and as prescribed in order to ensure that there is always sufficient room for the pedals.
- Do not use loose floor mats and do not place floor mats on top of one another.

F214 0032 13

Installing floor mats

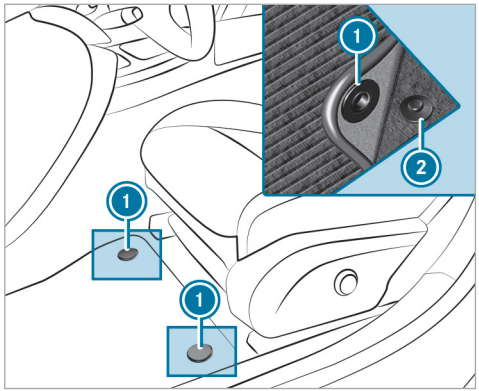

- Slide the corresponding seat backwards and lay the floor mat in the footwell such that it fits.
- Press studs (1) onto holders (2).
- Adjust the corresponding seat.

Removing floor mats

- Slide the corresponding seat backwards and pull the floor mat off holders (2).
- Adjust the corresponding seat.

Exterior lighting

Information about lighting systems and your responsibility

The various lighting systems of the vehicle are only aids. The driver of the vehicle is responsible for correct vehicle illumination in accordance with the prevailing light and visibility conditions, legal requirements and traffic situation.

Light switch

Operating the light switch

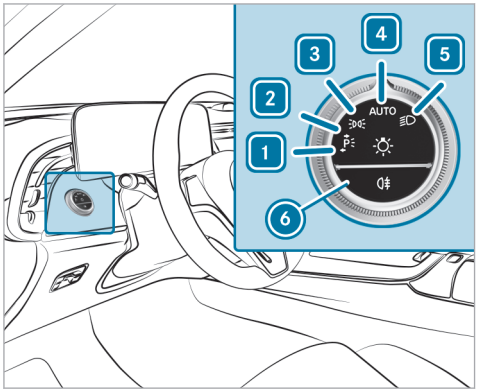

1 ⟵P≡ Left-hand parking lights
2 P≡⟶ Right-hand parking lights
3 ≡D○≡ Standing lights and license plate lamp
4 AUTO Automatic driving lights (preferred light switch position)
5 ≡D Low beam / high beam
6 0⇕ Switches the rear fog light on/off.

When low beam is activated, the ≡D○≡ indicator lamp for the standing lights will be deactivated and replaced by the ≡D low-beam indicator lamp.

▶ Always park your vehicle safely using sufficient lighting, in accordance with the relevant legal stipulations.

! **NOTE** Battery discharging by operating the parking lamps

Do not have the parking lamps switched on over a period of several hours.

If the battery is insufficiently charged, the standing lights or parking lights will be switched off automatically to facilitate the next engine start.

The exterior lighting (except standing and parking lights) will switch off automatically when the driver's door is opened.

- Observe the notes on locator lighting (⟶ page 210).

Switching on accident scene lighting

- ▶ Switch off the vehicle.
- ▶ Switch on the hazard warning lights (→ page 47).
- ▶ Turn the light switch from the AUTO position to the position. The low beam will be switched on despite the vehicle being switched off.

The accident scene lighting will be switched off if:

- you switch off the hazard warning lights.
- you turn the light switch back to AUTO.
- the battery is insufficiently charged.

Automatic driving lights function

When the vehicle is switched on, the side lamps, low beam and daytime running lights will be switched on automatically depending on the ambient light.

⚠ WARNING Risk of accident when the low beam is switched off in poor visibility

When the light switch is set to AUTO, the low beam may not be switched on automatically if there is fog, snow or other causes of poor visibility such as spray.

- ▶ In such cases, turn the light switch to .

The automatic driving lights are only an aid. You are responsible for the vehicle lighting.

Switching the rear fog light on/off

Requirements

- The light switch is in the or AUTO position.

- ▶ Press button .

Please observe the country-specific laws on the use of rear fog lamps.

Operating the combination switch for the lights

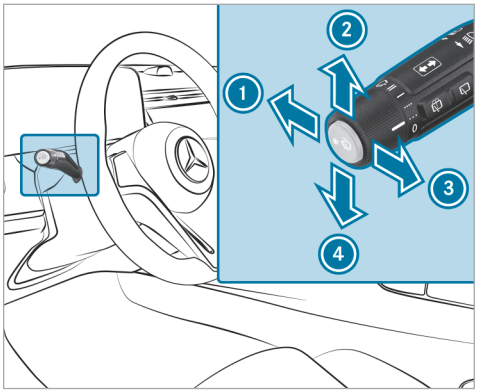

1. High beam
2. Turn signal light, right
3. Headlamp flashing
4. Turn signal light, left

- ▶ Use the combination switch to select the desired function.

Switching on high beam

- Turn the light switch to the ≡D or AUTO position.
- Push the combination switch in the direction of arrow (1).
  When high beam is activated, the indicator lamp for low beam ≡D will be deactivated and replaced by the indicator lamp for high beam ≡D.

Switching off high beam

- Push the combination switch in the direction of arrow (1) or pull it in the direction of arrow (3).

Headlamp flashing

- Pull the combination switch in the direction of arrow (3).

Turn signals

- **To indicate briefly:** push the combination switch briefly to the point of resistance in the direction of arrow (2) or (4).
  The corresponding turn signal light will flash three times.
- **To indicate permanently:** push the combination switch beyond the point of resistance in the direction of arrow (2) or (4).

  Vehicles with Active Lane Change Assist:
  - A turn signal indicator activated by the driver may continue to operate for the duration of the lane change.
  - If the driver indicated directly beforehand but a lane change was not immediately possible, the turn signal indicator may activate automatically.

Activating/deactivating the hazard warning lights

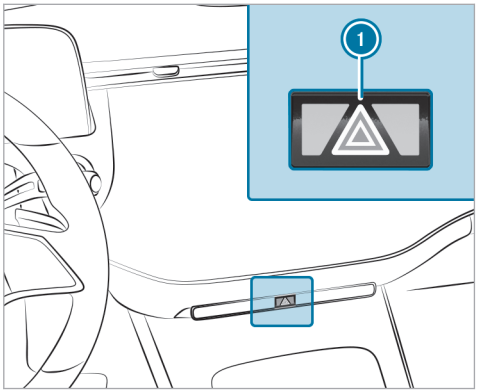

- Press button (1).

The hazard warning lights will switch on automatically if:

- the air bag has been deployed.

DIGITAL LIGHT adaptive functions

Function of dynamic low beam

You can watch an animation on this topic via the following link:

With this system, the headlamps adapt to the driving and weather situation. It also provides extended functions for improved illumination of the road.

ⓘ The availability of the functions is country-dependent.

The system comprises the following functions:

- Active headlamps (→ page 202)
- Cornering light (→ page 202)
- Highway mode (→ page 203)
- Enhanced fog light function (→ page 203)
- Bad weather light (→ page 203)
- City lighting (→ page 203)
- Topographical compensation (→ page 203)

The system is active only when it is dark.

Active headlamps function

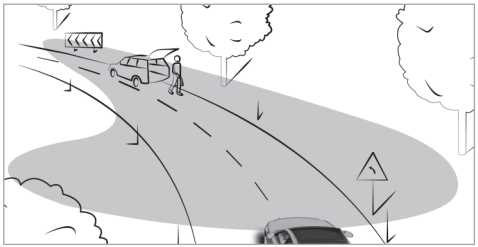

- The headlamps will follow your steering movements.
- Relevant areas will be better illuminated during a journey.

The functions will be active when the low beam is switched on.

Depending on the vehicle's equipment, the course of the lane in which you are driving will also be evaluated and the active headlamps function will adjust the light in advance.

Cornering light function

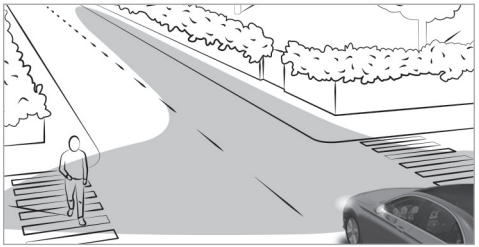

The cornering light improves the illumination of the road over a wide angle in the turning direction, enabling better visibility on tight bends, for example. The cornering light will be activated only when low beam is switched on.

The function will be active in the following cases:

- At speeds below 25 mph (40 km/h) when the turn signal light is switched on or the steering wheel is turned
- At speeds between 25 mph (40 km/h) and 43 mph (70 km/h) and when the steering wheel is turned

Traffic circle and intersection function (Canada): the cornering light will be activated on both sides based on an evaluation of the vehicle's current navigation position. It will remain active until after the vehicle has left the traffic circle or intersection.

Highway mode function (Canada)

Highway mode increases the range and brightness of the cone of light, enabling better visibility.

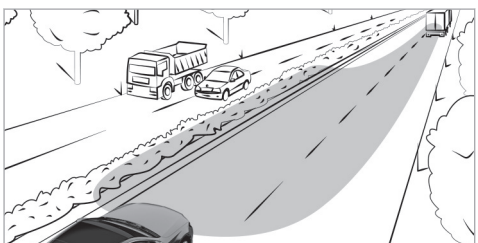

The function will be active if a freeway journey is detected by means of:

- the vehicle's speed
- the multifunction camera
- the navigation system

The function will not be active in the following cases:

- at speeds below 50 mph (80 km/h)

Enhanced fog light function (Canada)

The enhanced fog light function reduces reflective glare and improves the illumination of the edge of the road.

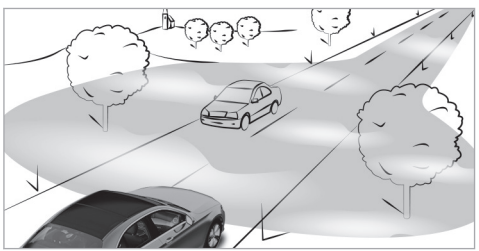

The function will be activated automatically in the following circumstances:

- At speeds below 43 mph (70 km/h) and when the rear fog light is switched on.

The function will be deactivated automatically in the following circumstances:

- When speeds greater than 62 mph (100 km/h) are reached.
- When the rear fog light is switched off.

Function of the bad weather light (Canada)

The bad weather light reduces reflections in rainy conditions by dimming individual areas of the headlamps. There will be less glare for the driver and other road users as a result.

The city lighting function (Canada)

City lighting improves the illumination of roadsides in urban areas using a broad distribution of light.

The function will be active in the following cases:

- At low speeds
- In illuminated parts of urban areas

Function of the topographical compensation

Based on available map data, the lighting system responds pre-emptively to different road heights. This means that the headlamp range will remain virtually constant when you are driving uphill or downhill.

ⓘ Only vehicles with a multimedia system with navigation have this function.

Assistance functions of DIGITAL LIGHT

DIGITAL LIGHT visually expands on the driver assistance systems by projecting the assistant displays in front of the vehicle while it is in motion. DIGITAL LIGHT can therefore help the driver in critical situations.

ⓘ The availability of the functions is country-dependent.

The system will remain active when Highbeam Assist is switched on.

Spotlight

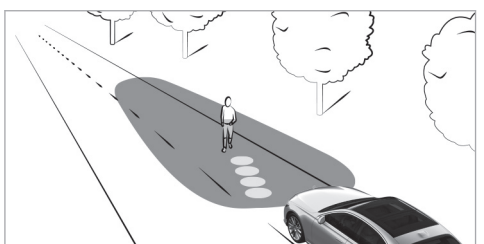

The spotlight function runs in the background and flashes the headlamps in four short bursts at persons detected within the lane markings. You will also be made aware of the position of the person by a projected symbol.

The function will be active in the following circumstances:

- You are driving outside illuminated areas.
- The system detects a lane marking.

Notes

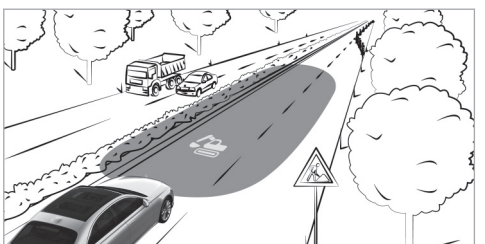

If Traffic Sign Assist detects a roadworks zone, the system will provide support as follows:

- A corresponding symbol will be projected onto the road when you enter a roadworks zone.

Observe the system limitations of Traffic Sign Assist (→ page 306).

Collision warning

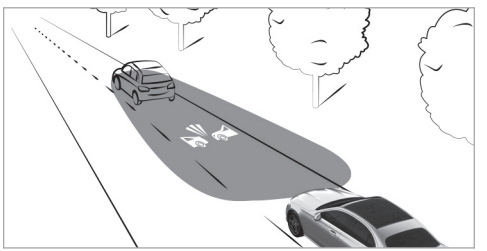

If you fall below the safe distance at speeds of at least 19 mph (30 km/h), a collision warning symbol will be projected onto the road.

Observe the system limitations of Active Brake Assist (→ page 300).

Lane change warning

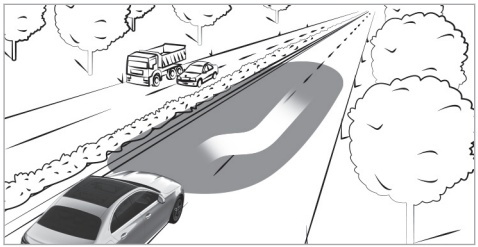

During assisted lane changes at speeds of at least 19 mph (30 km/h), the course of the lane change will flash.

Observe the system limitations of Active Lane Change Assist (→ page 296).

Lane keeping and blind spot warning

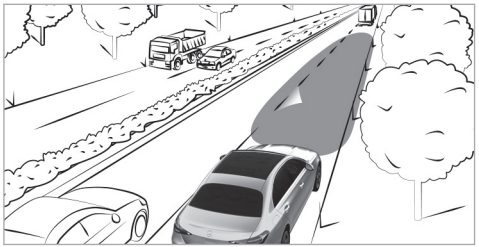

At speeds of at least 19 mph (30 km/h), a triangle that indicates a lane correction and its direction will be projected onto the road in the following cases:

- You leave the lane unintentionally.

  Observe the system limitations of Active Lane Keeping Assist (→ page 314).
- You switch on the turn signal light while an object or obstacle is in your blind spot.

  Observe the system limitations of Active Blind Spot Assist (→ page 311).

Activating/deactivating dynamic low beam

Requirements

- The vehicle is switched on.

Multimedia system:

→ ⌂ ▸▸ Settings ▸▸ Light ▸▸ DIGITAL LIGHT

▶ Activate or deactivate Dynamic Low Beam.

Activating or deactivating enhanced assistance functions

ⓘ The availability of the functions is dependent on the country.

ⓘ This function is an on-demand feature (→ page 81).

▶ Select Supporting Projections.

▶ Activate or deactivate the desired projections.

▶ Switch Projection for locator lighting/vehicle stop on or off.

If the locator lighting or the exterior switch-off delay time is activated, a high-resolution greeting or farewell scene will be played back for a short period of time when the vehicle is

opened or switched off. You can choose between the Digital Rain and Star Wave sequences.

ⓘ More information on locator lighting (→ page 210)
More information on the exterior switch-off delay time (→ page 210)

Adaptive Highbeam Assist

Adaptive Highbeam Assist function

⚠ **WARNING** Risk of accident despite Adaptive Highbeam Assist

Adaptive Highbeam Assist does not react to:

- Road users without lights, e.g. pedestrians
- Road users with poor lighting, e.g. cyclists
- Road users whose lighting is obstructed, e.g. by a barrier

On very rare occasions, Adaptive Highbeam Assist may fail to recognize other road users with their own lighting, or may recognize them too late.

In these, or in similar situations, the automatic high beam will not be deactivated or will be activated despite the presence of other road users.

▶ Always observe the road and traffic conditions carefully and switch off the high beam in good time.

Adaptive Highbeam Assist cannot take into account road, weather or traffic conditions.

Detection may be restricted in the following cases:

- In poor visibility, e.g. fog, heavy rain or snow
- if there is dirt on the sensors or the sensors are obscured

Adaptive Highbeam Assist is only an aid. You are responsible for adjusting the vehicle's lighting to the prevailing light, visibility and traffic conditions.

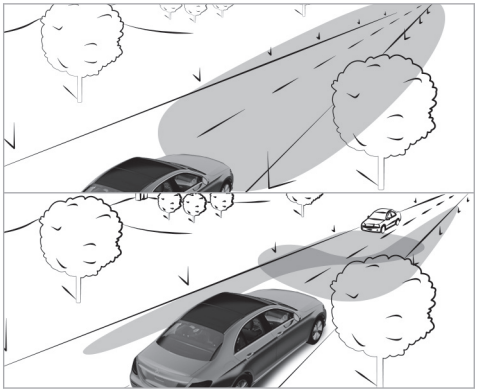

Adaptive Highbeam Assist automatically switches between the following types of light:

- Low-beam headlamps
- High beam

At speeds greater than 19 mph (30 km/h):

- If no other road users are detected, high beam will switch on automatically.

High beam will switch off automatically in the following cases:

- At speeds below 16 mph (25 km/h)
- If other road users are detected
- If street lighting is sufficient

ⓘ The system's optical sensor is located behind the windshield near the overhead control panel.

Switching Adaptive Highbeam Assist on/off

⚠ **WARNING** Risk of accident despite Adaptive Highbeam Assist

Adaptive Highbeam Assist does not react to:

- Road users without lights, e.g. pedestrians
- Road users with poor lighting, e.g. cyclists
- Road users whose lighting is obstructed, e.g. by a barrier

On very rare occasions, Adaptive Highbeam Assist may fail to recognize other road users with their own lighting, or may recognize them too late.

In these, or in similar situations, the automatic high beam will not be deactivated or will be activated despite the presence of other road users.

▶ Always observe the road and traffic conditions carefully and switch off the high beam in good time.

Switching on

▶ Turn the light switch to the AUTO position.

▶ Switch on high beam using the combination switch.
If Adaptive Highbeam Assist is activated, the indicator lamp will light up on the driver's display.

Switching off

▶ Switch off high beam using the combination switch.

Adaptive Highbeam Assist Plus

Adaptive Highbeam Assist Plus function (Canada)

⚠ **WARNING** Risk of accident despite Adaptive Highbeam Assist Plus

Adaptive Highbeam Assist Plus does not react to:

- Road users without lights, e.g. pedestrians
- Road users with poor lighting, e.g. cyclists
- Road users whose lighting is obstructed, e.g. by a barrier

On very rare occasions, Adaptive Highbeam Assist Plus may fail to recognize other road users with their own lighting, or may recognize them too late.

In these, or in similar situations, the automatic high beam will not be deactivated or will be activated despite the presence of other road users.

▶ Always observe the road and traffic conditions carefully and switch off the high beam in good time.

Adaptive Highbeam Assist Plus cannot take into account road, weather or traffic conditions.

Detection may be restricted in the following cases:

- In poor visibility, e.g. fog, heavy rain or snow
- if there is dirt on the sensors or the sensors are obscured

Adaptive Highbeam Assist Plus is only an aid. You are responsible for adjusting the vehicle's lighting to the prevailing light, visibility and traffic conditions.

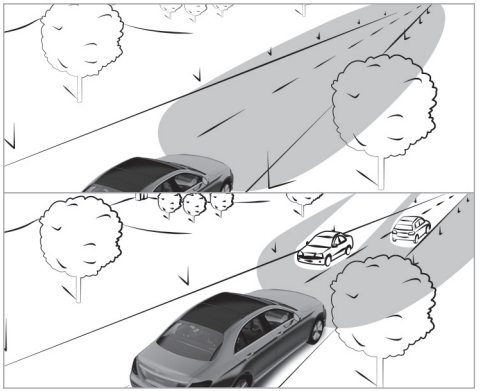

Adaptive Highbeam Assist Plus automatically switches between the following types of light:

- Low beam
- Partial high beam
- High beam
- ULTRA RANGE Highbeam

ULTRA RANGE Highbeam increases the brightness of the cone of light close to the legally permitted maximum.

Partial high beam does not include other road users in the high beam area. It does not dazzle them but enables full high-beam illumination for the driver apart from the excluded vehicles. Highly reflective signs are also illuminated with reduced brightness.

At speeds below 16 mph (25 km/h) or when there is sufficient street lighting:

- Partial high beam and high beam will be switched off automatically.

At speeds above 19 mph (30 km/h):

- If no other road users are detected, high beam will be switched on automatically.
- If other road users are detected, partial high beam will be switched on automatically.

at speeds below 25 mph (40 km/h):

- ULTRA RANGE Highbeam will switch off automatically.

At speeds above 31 mph (50 km/h):

- If no other road users are detected, the road is straight and it is not raining heavily, ULTRA RANGE Highbeam will be switched on automatically.
- If other road users are detected, partial high beam will be switched on automatically.
- If highly reflective signs are detected, ULTRA RANGE Highbeam will be switched off automatically.

ⓘ The system's optical sensor is located behind the windshield near the overhead control panel.

Switching Adaptive Highbeam Assist Plus on/off (Canada)

⚠ **WARNING** Risk of accident despite Adaptive Highbeam Assist Plus

Adaptive Highbeam Assist Plus does not react to:

- Road users without lights, e.g. pedestrians
- Road users with poor lighting, e.g. cyclists
- Road users whose lighting is obstructed, e.g. by a barrier

On very rare occasions, Adaptive Highbeam Assist Plus may fail to recognize other road users with their own lighting, or may recognize them too late.

In these, or in similar situations, the automatic high beam will not be deactivated or will be activated despite the presence of other road users.

▶ Always observe the road and traffic conditions carefully and switch off the high beam in good time.

Switching on

▶ Turn the light switch to the AUTO position.

▶ Switch on high beam using the combination switch.
If Adaptive Highbeam Assist Plus is activated, the indicator lamp will light up on the driver's display. When partial high beam or high beam is active, the corresponding blue indicator lamp will also light up.

Switching off

▶ Switch off high beam using the combination switch.

Setting low beam

Multimedia system:

→ ⌂ ▸▸ Settings ▸▸ Light ▸▸ DIGITAL LIGHT ▸▸ Low Beam

▶ Select Right-side Traffic, Left-side Traffic or Automatic.

Switching the daytime running lights on/off

Multimedia system:

→ ⌂ ▸▸ Settings ▸▸ Light ▸▸ DIGITAL LIGHT

▶ Switch the daytime running lights on or off.

ⓘ In vehicles without DIGITAL LIGHT headlamps, the daytime running lights can be switched on or off on the driving lights menu.

ⓘ The availability of the function is country-dependent.

Setting the exterior lighting switch-off delay time

Multimedia system:

→ ⌂ ▸▸ Settings ▸▸ Light ▸▸ Interior/Exterior Lighting ▸▸ External Lighting Delay

▶ Set the switch-off delay time.
When the vehicle's engine is switched off, the exterior lighting will be activated for the set time.

Activating/deactivating the locator lighting

Multimedia system:

→ ⌂ ▸▸ Settings ▸▸ Light ▸▸ Interior/Exterior Lighting

▶ Activate or deactivate Locator Lighting.

When the function is activated, the exterior lighting will light up for 40 seconds after the vehicle is unlocked or the driver's door is opened when the vehicle is parked and not locked. When you start the vehicle, the locator lighting will be deactivated and the automatic driving lights activated.

Interior lighting

Adjusting the interior lighting

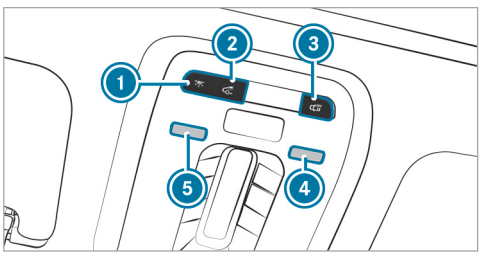

1 Switches the front interior lighting on/off.

2 Switches the rear interior lighting on/off.

3 Switches automatic interior lighting control on/off.

▶ **To switch reading lamps on/off:** hold your hand under the respective reading lamp 4 or 5.

Operating unit inside the grab handle (rear passenger compartment)

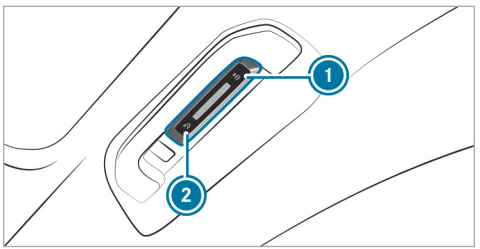

1 Reading lamp on the respective side of the vehicle

2 Rear interior lighting

▶ **To switch reading lamps on:** press button 1.
The reading lamp, the interior lighting in the grab handle and the dome lamp on the respective side of the vehicle will light up.

- **To switch reading lamps off:** press button (1) once or twice.
  When you press it once, the interior lighting in the grab handle and the dome lamp on the respective side of the vehicle will go out.
  When you press it twice, the reading lamp on the respective side of the vehicle will go out.
- **To switch the rear interior lighting on/off:** press button (2).
  The reading lamps, the interior lighting in the grab handle and the dome lamps on both sides of the vehicle will light up or go out.

Adjusting the ambient lighting

Multimedia system:

→ ⌂ ▸▸ Comfort ▸▸ Ambient Light

Setting the color

- Select Color.
- Select Monochrome or Multi-color.
- Set the desired color or color scheme.

Adjusting the brightness

- Select Brightness.
- Adjust the brightness.

ⓘ Depending on the ambient light, the ambient lighting will automatically switch between day and night modes.

Activating the brightness for zones

- Select Brightness.
- Switch off Link Zones.
  The Direct, Indirect and Accents zones can be set separately.

ⓘ The Light Band zone can also be set in vehicles with active ambient lighting.

Activating effects

⚠ **WARNING** Risk of accident if ambient lighting and active ambient lighting effects are not switched on

The warning assistance effects will be fully active only when the relevant driving or driving safety systems are activated on the Driving Assistance menu.

- Make sure that the relevant driving or driving safety systems are activated.

ⓘ Observe the notes on driving systems and your responsibility; you may otherwise fail to recognize dangers (→ page 272).

- Select Effects.
- Activate the desired effect.

ⓘ Depending on the vehicle equipment, different effects will be available.

Operating feedback effects

- Climate: If changes are made to the temperature setting in the vehicle, the color of the ambient light will change briefly.
- Voice Assistant: In vehicles with active ambient lighting, the voice assistant will be visually animated.
- Greeting: When you get into the vehicle, a special color animation will play.

Warning assistance effects

- Warning When Exiting: If an object is detected in the blind spot while you are getting out of

the vehicle, the ambient lighting in the affected door will flash red.

Further information on the exit warning (⟶ page 311).

- Active Lane Keeping Assist: If there is a warning from Active Lane Keeping Assist, the active ambient lighting will flash red.

  Further information about Active Lane Keeping Assist (⟶ page 314).
- Active Brake Assist: If there is an Active Brake Assist warning, the active ambient lighting in the center of the cockpit will flash bright red.

  Further information on Active Brake Assist (⟶ page 300).
- Active Blind Spot Assist: In vehicles with active ambient lighting, the ambient lighting on the affected side will flash red if there is a warning from Active Blind Spot Assist.

  Further information about Active Blind Spot Assist (⟶ page 311).
- Parking Assist PARKTRONIC: The information from the parking sensors during parking maneuvers will be displayed in color.

  Further information on Parking Assist PARKTRONIC: (⟶ page 325)

Multi-color Animation

- The chosen color combination will change at predefined intervals.

Sound visualization

- Depending on the selected light color, the sound visualization function visually accentuates the sound content.

ⓘ In vehicles with active ambient lighting, an animation will be played.

ⓘ The desired operating feedback and warning assistance can be activated or deactivated in the menu that is called up via the ☼ symbol. Depending on the equipment, different operating feedback and warning assistance effects are available.

ⓘ If the brightness is set to a low level, warning animations will be displayed with a higher basic brightness.

You can watch an animation on this topic via the following link:

Switching the interior lighting switch-off delay time on/off

Multimedia system:

⌂ ▸▸ Settings ▸▸ Light ▸▸ Interior/exterior lighting ▸▸ Interior Lighting Delay

▶ Switch Interior Lighting Delay on or off.
If this function is active, the interior lighting will be switched on for a short time after the end of the journey.

Windshield wiper and windshield washer system

Switching the windshield wipers on/off

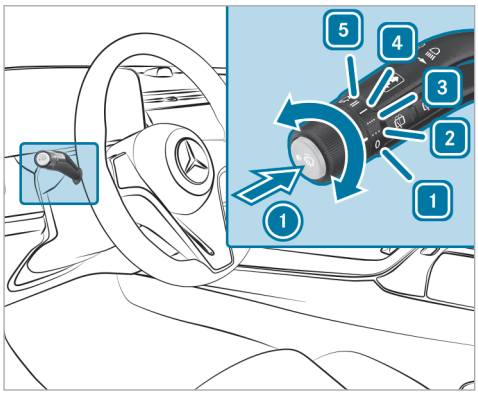

1 0 Windshield wipers off
2 ••• Automatic wiping, normal
3 •••• Automatic wiping, frequent
4 — Continuous wiping, slow
5 = Continuous wiping, fast

- Turn the combination switch to the corresponding position 1 - 5.
- **Single wipe:** press button 1 as far as the point of resistance.
- **Wiping with washer fluid:** press button 1 beyond the point of resistance.

ⓘ Observe the notes on washing the vehicle in a car wash (→ page 28).

Changing the windshield wiper blades

⚠ **WARNING** Risk of becoming trapped if the windshield wipers are switched on while wiper blades are being replaced

If the windshield wipers begin to move while you are changing the wiper blades, you can be trapped by the wiper arm.

- Always switch off the windshield wipers and vehicle before changing the wiper blades.

Moving the wiper arms into the replacement position

- Switch the vehicle on and then off again immediately.
- Within around 15 seconds, press the button on the combination switch for approximately three seconds (→ page 213).
  The wiper arms will move into the replacement position.

ⓘ Depending on the production period of the vehicle, different variants of the wiper blades will have been installed.

Removing the wiper blades (variant 1)

- Fold the wiper arms away from the windshield.

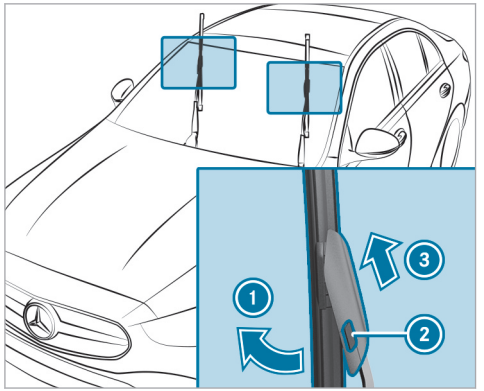

- Hold the wiper arm with one hand. With the other hand, turn the wiper blade away from the wiper arm in the direction of arrow (1) as far as it will go.
- Press release knob (2).
- Remove the wiper blade in the direction of arrow (3) away from the wiper arm.

Removing the wiper blades (variant 2)

- Fold the wiper arms away from the windshield.

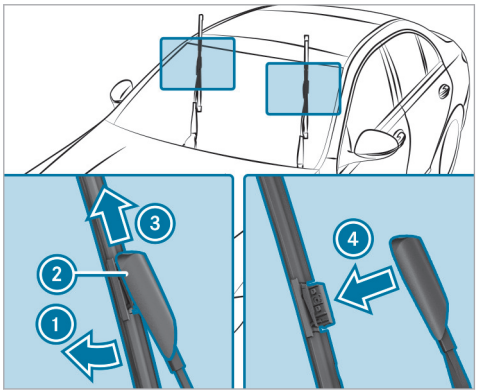

- Hold the wiper arm with one hand. With the other hand, turn the wiper blade away from the wiper arm in the direction of arrow (1) as far as it will go.
- Slide catch (2) in the direction of arrow (3) until it engages in the removal position.
- Remove the wiper blade from the wiper arm in the direction of arrow (4).

Installing the wiper blades (variant 1)

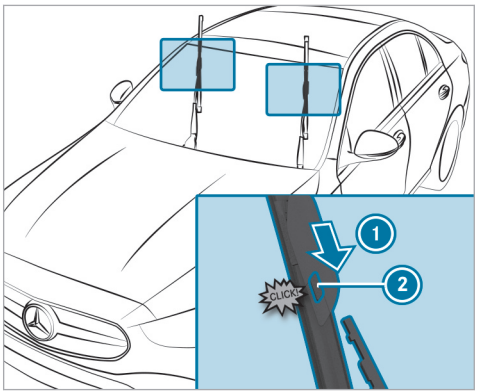

- Insert the new wiper blade in to the wiper arm in the direction of arrow (1) until release knob (2) engages.
- Make sure that the wiper blade is seated correctly.

F214 0032 13

- Fold the wiper arms back onto the windshield.
- Switch on the vehicle.
- Press the [ ] button on the combination switch.
  The wiper arms will return to their original positions.
- Switch off the vehicle.

Installing the wiper blades (variant 2)

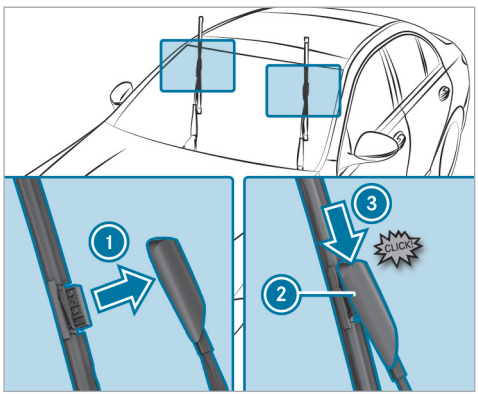

- Insert the new wiper blade into the wiper arm in the direction of arrow 1.
- Slide catch 2 in the direction of arrow 3 until it engages in the locking position.
- Make sure that the wiper blade is seated correctly.
- Fold the wiper arms back onto the windshield.
- Switch on the vehicle.
- Press the [ ] button on the combination switch.
  The wiper arms will return to their original positions.
- Switch off the vehicle.

Maintenance display

A maintenance display can be found at the tip of the blade on the newly installed wiper blades.

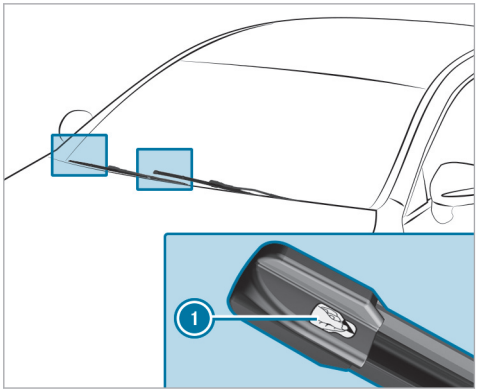

- Remove protective film 1 from the maintenance display.

When the color of the maintenance displays changes from black to yellow, you should replace the wiper blades.

Mirrors

Operating the outside mirrors

WARNING Risk of accident due to adjusting the vehicle settings while the vehicle is in motion

You could lose control of the vehicle in the following situations in particular:

- If you adjust the driver's seat, the head restraint, the steering wheel or the mirror while the vehicle is in motion
- If you fasten your seat belt while the vehicle is in motion

▶ Before starting the vehicle: in particular, adjust the driver's seat, head restraint, steering wheel and mirror, and fasten your seat belt.

WARNING Risk of accident due to misjudgment of distance when using the front-passenger mirror

The outside mirror on the front passenger side reflects objects on a smaller scale. The objects in view are in fact closer than they appear.

▶ Therefore, always look over your shoulder to check the actual distance between you and the road users traveling behind you.

Adjusting the outside mirrors

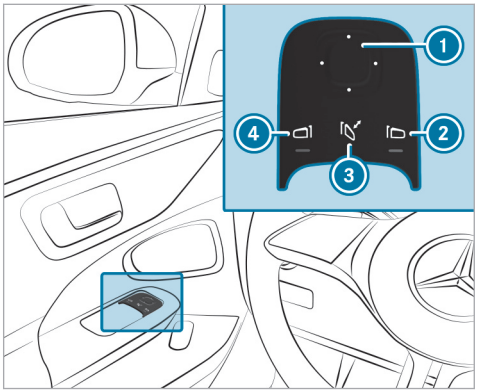

▶ Use button (2) or (4) to select the desired mirror.

ⓘ In vehicles with MBUX Interior Assistant and driver camera, the required outside mirror can also be preselected automatically via a natural head movement to the left or right(→ page 393).

▶ Use button ① to adjust the position of the selected mirror.

Folding the outside mirrors in/out (vehicles with electrically folding outside mirrors)

▶ Briefly press button ③.

ⓘ If the battery has been disconnected or has discharged, the outside mirrors must be moved briefly using button ③. Only then will the automatic mirror folding function work properly.

Engaging the outside mirrors

If an outside mirror has been forcibly disengaged, proceed as follows.

▶ Vehicles without electrically folding outside mirrors: move the outside mirror into the correct position manually, until it engages audibly.

▶ Vehicles with electrically folding outside mirrors: press and hold button ③.
You will hear a click and the mirror will audibly engage. The outside mirror will now be set to the correct position.

Automatic anti-glare mirrors function

⚠ **WARNING** Risk of acid burns and poisoning due to the anti-glare mirror electrolyte

Electrolyte may escape if the glass in an automatic anti-glare mirror breaks.

The electrolyte is hazardous to health and causes irritation. It must not come into contact with your skin, eyes, respiratory organs or clothing or be swallowed.

▶ If you come into contact with electrolyte, observe the following:
- Immediately rinse the electrolyte from your skin with water and seek medical attention.
- If electrolyte comes into contact with your eyes, immediately rinse them thoroughly with clean water and seek medical attention.
- If the electrolyte is swallowed, immediately rinse your mouth out thoroughly. Do not induce vomiting. Seek medical attention immediately.
- Immediately change out of clothing which has been contaminated with electrolyte.
- If an allergic reaction occurs, seek medical attention immediately.

The inside rearview mirror and the outside mirror on the driver's side will automatically go into anti-glare mode if light from a headlamp hits the sensor on the inside rearview mirror.

System limits

The system will not go into anti-glare mode if:
- The vehicle is switched off.
- Reverse gear is engaged.
- The interior lighting is switched on.

Front-passenger outside mirror parking position function

The parking position makes parking easier.

The front-passenger outside mirror will swivel downwards in the direction of the rear wheel on the front passenger's side when:

- The parking position is stored (→ page 218).
- The front-passenger mirror is selected.
- Reverse gear is engaged.

The front-passenger outside mirror will move back to its original position when:

- You shift the transmission to another transmission position.
- You are traveling at a speed greater than 9 mph (15 km/h).
- You press the button for the outside mirror on the driver's side.

Storing and calling up the parking position of the front-passenger outside mirror using reverse gear

Storing

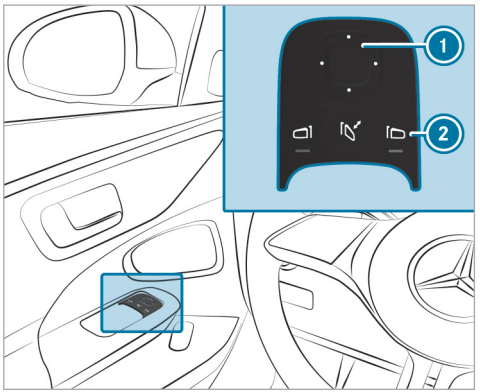

F214 0032 13

- Select the front-passenger outside mirror using button (2).
- Engage reverse gear.
- Move the front-passenger outside mirror into the desired parking position using button (1).

Calling up

- Select the front-passenger outside mirror using button (2).
- Engage reverse gear.
  The front-passenger outside mirror will move into the stored parking position.

Activating/deactivating the automatic mirror folding function

Multimedia system:

→ ⌂ ▸▸ Settings ▸▸ Vehicle ▸▸ Opening/closing

- Activate or deactivate Automatic Mirror Folding.

Overview of climate control systems

Notes on climate control

An interior air filter in combination with the prefilter in the engine compartment must always be used so that the air conditioning system, pollution level monitoring and the air filtration work correctly. Use filters recommended and approved by Mercedes-Benz. Always have maintenance work carried out at a qualified specialist workshop.

Overview of the climate bar

The indicator lamps indicate that the corresponding functions are activated.

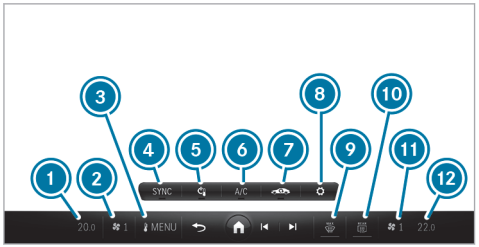

Front climate bar on the central display (example). The climate bar display depends on the settings.

1. Increases/reduces the temperature (front left)
2. Increases/reduces the airflow or switches on climate control (front left) (→ page 220)
3. MENU Calls up the air conditioning menu (→ page 223)
4. SYNC Synchronisation function(→ page 225)
5. Switches climate control on/off(→ page 220)
6. A/C Activates/deactivates the A/C function (→ page 223)
7. Switches air-recirculation mode on/off (→ page 226)
8. Settings
9. MAX Defrosts the windshield
10. Example: REAR Switches the rear window defroster on/off. This button can be assigned individually under Settings.
11. Increases/reduces the airflow or switches on climate control (front right) (→ page 220)
12. Increases/reduces the temperature (front right)

ⓘ The airflow is automatically reduced in the event of an incoming call to keep noise sources as low as possible. The airflow can be adjusted again via 3.

ⓘ The availability of individual functions is country- and equipment-dependent.

Overview of the rear operating unit

The rear operating unit is available only for vehicles with the THERMOTRONIC air conditioning control panel.

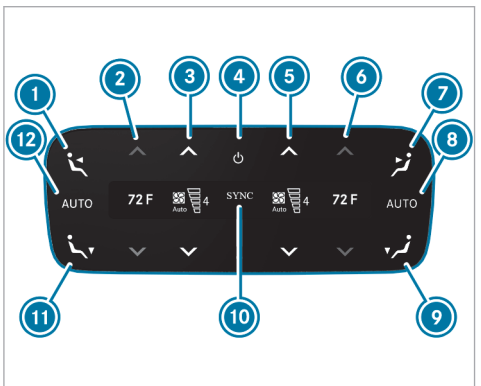

Example: USA

1. Sets the air distribution to the center and side air vents in the rear passenger compartment, left
2. Sets the temperature in the rear passenger compartment, left
3. Sets the airflow in the rear passenger compartment, left, or switches climate control on/off (→ page 221)
4. Switches climate control on/off (→ page 221)
5. Sets the airflow in the rear passenger compartment, right, or switches climate control on/off (→ page 221)
6. Sets the temperature in the rear passenger compartment, right
7. Sets air distribution to the center and side air vents in the rear passenger compartment, right
8. Sets rear passenger compartment climate control to automatic mode, right (→ page 224)
9. Sets the air distribution to the footwell vents in the rear passenger compartment, right
10. Synchronization is activated (→ page 225)
11. Sets the air distribution to the footwell vents in the rear passenger compartment, left
12. Sets rear passenger compartment climate control to automatic mode, left (→ page 224)

The settings for the second row of seats can be configured via the rear operating unit or the multimedia system (→ page 225) depending on the vehicle's equipment.

Operating the climate control system

Switching climate control on/off

Switching on climate control

- Set the airflow to level 1 or higher via [fan] on the climate bar on the central display.

or

- Press and hold [MENU].

or

- Select [MENU] and then press [power].

or

- Press [AUTO].

Switching off climate control

▶ Set the airflow to level 0 via ⁂ on the climate bar on the central display.

or

▶ Press ⏻.

If climate control is switched off, the windows may fog up more quickly. Switch climate control off only briefly.

ⓘ If climate control is switched off via ⏻, **OFF** will be shown on the climate bar.

Switching climate control on/off via the rear operating unit

Switching on

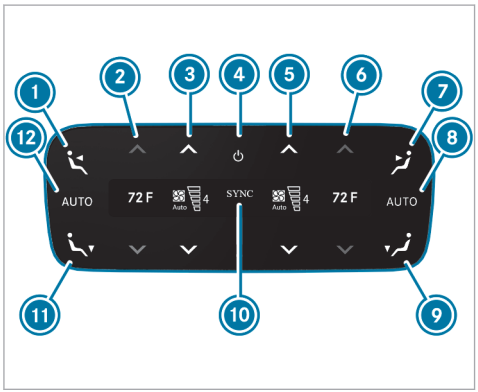

Example: USA

▶ Press button 4.

or

▶ Set the airflow to level 1 or higher using buttons 3 and 5.

or

▶ Press buttons 2, 6, 8 or 12.

Switching off

▶ Press button 4.

or

▶ Set the airflow to level 0 using buttons 3 and 5.

ⓘ If rear climate control is switched off via button 4, **OFF** will be shown on the displays.

Configuring the climate bar

Multimedia system:

↪ Climate Menu ▸▸ First Row of Seats

On the climate menu, you can choose between the different assignments for the freely configurable button on the climate bar.

The following assignments are available on the climate menu:

- PM2.5 Air quality

- Recirculated air
- A/C A/C function
- SYNC Synchronization function
- REAR Rear window defroster

ⓘ Functions that are not permanently set on the climate bar are available on the climate menu.

▶ Select ☼.

▶ Select the desired function for the button in the window.
The function will be applied to the button.

ⓘ You can also access the window for assigning the button directly by pressing and holding the button once.

Setting the temperature and airflow

Calling up the controller for temperature and airflow

▶ To call up the controller: press the temperature displayed or press on the climate bar on the central display.

or

▶ Press and hold the temperature displayed or press and hold on the climate bar on the central display.

or

▶ Swipe on the temperature displayed or swipe on on the climate bar on the central display.

Setting the temperature

▶ To increase the temperature: press + or move the controller. To set the temperature to the maximum, press and hold +.

▶ To reduce the temperature: press − or move the controller. To switch off the climate control, press and hold −.

ⓘ The temperatures for the driver's and front passenger sides can be operated only one after the other.

Setting the airflow

▶ Press on the climate bar on the central display.

▶ To increase the airflow: press + or move the controller. To set the airflow to the maximum, press and hold +.

▶ To reduce the airflow: press − or move the controller. To switch off the airflow, press and hold −.

ⓘ If the AUTO function is activated, the airflow will remain active.

Activating/deactivating the A/C function via the climate bar

The A/C function heats, cools and dehumidifies the vehicle's interior air.

▶ Press A/C on the climate bar on the central display.

ⓘ The A/C button on the climate bar on the central display can also be assigned to other functions. If the button is not shown on the climate bar, the A/C function can be switched on and off via the climate menu.

ⓘ Switch off the A/C function only briefly; otherwise, the windows may fog up more quickly.

Condensation may drip from the underside of the vehicle when cooling mode is active. This is not indicative of a malfunction.

Calling up the air conditioning menu using the climate bar

The air conditioning menu can be called up via the climate bar. The climate bar is always shown on the lower edge of the central display.

- Select the Menu entry in the climate bar. The First Row of Seats menu is opened.

Jumping directly to the Air Quality menu

- Select the PM2.5 fine particle sensor status display in the air conditioning bar. The Air Quality menu is opened. An animation of the automatic air cleaning taking place is shown.

ⓘ The fine particle sensor status display is on the home screen next to the temperature display on the right and it informs you of the current particulate levels inside and outside of the vehicle.

The measurement values are shown with the µg/m³ units (micrograms per cubic meter).

Strong acceleration after longer parking periods will lead to a detachment of the dust covering the vehicle. This dust measured by the PM2.5 sensor might lead to a short rise of outside values.

Defrosting the windshield via the climate bar

Switching on

- Press MAX on the climate bar on the central display.

Switching off

- Press MAX, AUTO or on the climate bar on the central display.

or

- Set the airflow to 0.

ⓘ If the defrost function is activated via MAX several functions such as the temperature setting or air distribution are automatically deactivated.

Activating/deactivating the A/C function via the air conditioning menu

Multimedia system:

Climate Menu ▸▸ First Row of Seats

Depending on the external conditions, support for improved cooling and dehumidification of the interior air will be provided when the A/C function is activated. If it is not possible to operate the A/C function on the climate bar on the central display, switch the function on or off on the climate menu of the central display.

- Select A/C (A/C).

Switch off the A/C function only briefly; otherwise, the windows may fog up more quickly.

Condensation may drip from the underside of the vehicle when cooling mode is active. This is not indicative of a malfunction.

Setting climate control to automatic mode

In automatic mode, the set vehicle interior temperature is controlled automatically and maintained at a constant level by the air supply.

- Press [fan] on the climate bar on the central display and then select AUTO.

ⓘ You can increase or reduce the airflow via a controller by pressing [fan] on the climate bar of the multimedia system. The airflow is automatically reduced in the event of an incoming call. You will still be able to adjust the airflow manually by pressing [fan]. In automatic mode, five levels can be set via the controller, while seven levels can be set without automatic mode.

- **To switch to manual operation:** switch off automatic mode or adjust an aspect of air distribution, e.g. [vents].

Setting climate control to automatic mode via the rear operating unit

In automatic mode, the temperature is automatically regulated by the temperature of the dispensed air and the airflow.

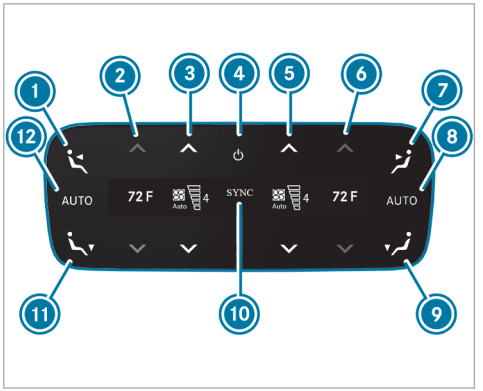

Example: USA

- Press button ⑧ or ⑫.

Overview of the air distribution settings

The symbols on the central display indicate the vents through which the airflow is being directed:

[defroster] Defroster vents

[vents] Center and side air vents

[footwell] Footwell vents

Setting air distribution and air vents using the air conditioning menu

Multimedia system:

→ Climate Menu

Setting the air distribution

- Select First Row of Seats or Second Row of Seats.
- Select an air distribution option using the [defroster], [vents] or [footwell] buttons.

ⓘ When the air conditioning system is switched on, at least one zone is always active. However, several air distribution options can be selected at the same time, for example to set the climate control for the vehicle interior and the footwells simultaneously. In doing so, the climate control for the windshield can only be selected for the first seat row. When automatic mode is active, the buttons for setting the air distribution are automatically deactivated. When the air conditioning system is switched off, the buttons remain operable and the last setting is saved.

Setting the airflow direction automatically with Digital Vent Control

The Digital Vent Control electric air vents are only available on vehicles with the THERMOTRONIC air conditioning control panel. The function is only available for the first seat row in the air conditioning menu.

- Select First Row of Seats.
- Select the button under vent direction.
- Choose between the different settings Individual, Head, Upper body, Even or Deflected.
- The electronic air vents automatically move to the set position.

ⓘ The electronic air vents can also be adjusted manually using the corresponding controllers (→ page 230).

ⓘ The electronic air vents have automatic blockage detection. If a movement of the air vents is initiated via the multimedia system and blocked by manual intervention or objects, the electronic air vents return to the previous starting position after two attempts.

Setting rear climate control using the air conditioning menu

Multimedia system:

→ Climate Menu

Setting the temperature

- Select Second Row of Seats.
- Set the temperature.

Setting the airflow

- Select Second Row of Seats.
- Set the air flow with ▲ or ▼.

Controlling rear climate control automatically

- Select AUTO.

ⓘ When the defrost function is activated, some functions (e.g. the temperature setting) will automatically be deactivated. To deactivate the defrost function, press either MAX, AUTO or or set the air flow to level 0 (→ page 223).

Deactivating rear climate control

- Select REAR OFF.

Switching the synchronization function on/off via the air conditioning menu

Multimedia system:

→ Climate Menu ⏩ First Row of Seats

The synchronization function controls the climate control centrally. The driver's settings for temperature, airflow and air distribution are automatically adopted for each climate zone.

- Select SYNC (SYNC).

Defrosting the windows

Windows fogged up on the inside

- Press on the climate bar on the central display and then select AUTO.
- If the windows remain fogged up: press MAX on the climate bar on the central display.

Windows fogged up on the outside

- Switch on the windshield wiper.
- Press on the climate bar on the central display and then select AUTO.

Switching air-recirculation mode on/off

- Press on the climate bar on the central display.
  The interior air will be recirculated.

Air-recirculation mode will automatically switch to fresh air mode after a while.

ⓘ If air-recirculation mode is switched on, the windows may fog up more quickly. Switch on air-recirculation mode only briefly.

Switching residual heat mode on/off via the climate bar

Requirements

- The residual heat function is available.
- The vehicle is parked.
- The coolant temperature is sufficiently high.

It is possible to make use of the residual heat from the engine to continue heating or ventilating the front compartment of the vehicle for approximately 30 minutes, depending on the temperature set.

- **To switch on or off:** select Residual Heat on the climate bar of the central display.

The residual heat function will automatically switch off after a while.

ⓘ If residual engine heat utilization is activated, the two buttons for setting the temperature and air distribution will automatically be deactivated.

Activating/deactivating ionization

Multimedia system:

Climate Menu ▸▸ Air Quality

When ionization is activated, the interior air is enriched with negatively charged oxygen ions. These can promote the well-being of the occupants.

- Select Ionization.

ⓘ The function can be performed only if AUTO mode is activated or the air distribution is set to the side air vent. The function is restricted if the side air vents on the driver's side are closed.

Fragrance system

Activating/deactivating the fragrance system using the multimedia system

Requirements

- Automatic climate control is activated.
- The glove box is closed.
- A flacon is inserted.

Multimedia system:

→ Climate Menu ⏩ Air Quality

The fragrance system distributes a pleasant fragrance throughout the vehicle interior from a flacon located in the glove box.

- ▶ Navigate down until the climate control bar is active.
- ▶ Select Fragrance.
- ▶ Activate or deactivate fragrancing.

Setting the fragrance system

Requirements

- The climate control system is switched on.
- The glove compartment will close.
- A flacon is inserted.

Multimedia system:

→ Climate Menu ⏩ Air Quality

The fragrance system distributes a pleasant fragrance throughout the vehicle interior from a flacon located in the glove compartment.

- ▶ Select Fragrance.
- ▶ Keep pressing until the desired intensity is reached.

Inserting or removing the flacon of the fragrance system

⚠ **WARNING** Risk of injury from liquid perfume

If children open the flacon, they could drink the liquid perfume or it could come into contact with their eyes.

- ▶ Do not leave children unattended in the vehicle.
- ▶ Consult a doctor immediately if liquid perfume has been drunk.
- ▶ If liquid perfume comes into contact with your eyes or skin, rinse your eyes with clean water.
- ▶ If symptoms continue, consult a doctor.

ENVIRONMENTAL NOTE Environmental damage due to improper disposal of full flacons

Full flacons must not be disposed of together with household waste.

- ▶ Hand in full flacons at a pollutant collection point.

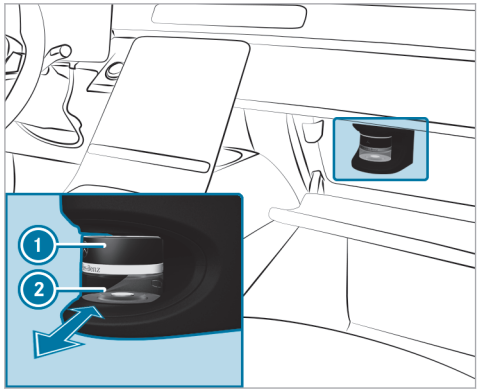

1 Cap
2 Flacon

- **To insert:** slide the flacon into the holder as far as it will go.
- **To remove:** after opening the glove compartment, wait for approximately seven seconds and pull out the flacon.

If you do not use genuine Mercedes-Benz interior perfumes, observe the manufacturers' safety notices on the perfume packaging.

Dispose of the genuine Mercedes-Benz interior perfume flacon when it is empty and do not refill it.

Refillable flacon

- Unscrew the cap of the empty flacon.
- Fill the flacon with a maximum of 0.5 fl. oz. (15 ml).
- Screw the cap back onto the flacon.

Always refill the empty refillable flacon with the same perfume. Observe the separate information sheet that comes with the flacon.

Pre-entry climate control for departure time

Pre-entry climate control for departure time function

WARNING Risk of fatal injury due to exposure to extreme heat or cold in the vehicle

If persons, particularly children, are subjected to prolonged exposure to intense heat or cold, there is a risk of severe injury or even death.

- Never leave persons, particularly children, unattended in the vehicle.

WARNING Risk of burns due to repeatedly switching on the seat heating

Repeatedly switching on the seat heating can cause the seat cushion and seat backrest padding to become very hot.

In particular, the health of persons with limited temperature sensitivity or a limited ability to react to high temperatures may be affected or they may even suffer burn-like injuries.

- Do not repeatedly switch on the seat heating.

To protect against overheating, the seat heating may be temporarily deactivated after it has been switched on repeatedly.

ⓘ This function is available only for vehicles with 48 V on-board electrical systems.

The air inside the vehicle can be heated, ventilated or cooled to the set temperature when the vehicle is parked.

The running time of pre-entry climate control may be reduced in the following circumstances (vehicles with a 48 V on-board electrical system):

- The 48 V battery is not fully charged.

If present, seat ventilation will be activated in cooling and ventilation modes.

Depending on the vehicle's equipment, the following functions will be activated in heating mode, if available:

- Seat heating
- Steering wheel heating
- Panel heating
- Mirror heater
- Rear window defroster

When the set temperature changes, climate control mode will switch automatically as follows:

- From heating mode to ventilation or cooling mode, or
- From cooling mode to ventilation or heating mode, or
- From ventilation mode to heating or cooling mode

Setting pre-entry climate control at departure time via the multimedia system

Multimedia system:

Climate Menu ▸▸ Pre-entry Climate Ctrl.

Setting the departure time

▶ Select Edit Departure Time .

▶ Select a departure time or set a new departure time.

Setting the repeat days

▶ Select Edit Departure Time .

▶ Set the desired departure time and select the corresponding weekdays on which this departure time is to apply.

▶ Press OK to confirm.

Selecting seats

▶ Select Driver, Passenger, Rear Left or Rear Right.
Pre-entry climate control will take place for the selected seats.

Activating/deactivating pre-entry climate control for departure time

WARNING Risk of fatal injury due to exposure to extreme heat or cold in the vehicle

If persons, particularly children, are subjected to prolonged exposure to intense heat or cold, there is a risk of severe injury or even death.

▶ Never leave persons, particularly children, unattended in the vehicle.

WARNING Risk of burns due to repeatedly switching on the seat heating

Repeatedly switching on the seat heating can cause the seat cushion and seat backrest padding to become very hot.

In particular, the health of persons with limited temperature sensitivity or a limited ability to react to high temperatures may be affected or they may even suffer burn-like injuries.

▶ Do not repeatedly switch on the seat heating.

To protect against overheating, the seat heating may be temporarily deactivated after it has been switched on repeatedly.

Requirements

- The high-voltage battery is charged sufficiently.
- The function has been activated via the multimedia system.

▶ **To activate:** set the departure time (⟶ page 229).
Pre-entry climate control for departure time will switch on a maximum of 55 minutes before the selected departure time. It will remain active for another five minutes if departure is delayed.

▶ **To deactivate the pre-entry climate control at departure time early:** press [icon] on the climate bar on the central display (see Operator's Manual for the vehicle) or switch off the preselection of the time in the air conditioning menu.

If present, the following functions will remain active once the vehicle has been started:

- Seat heating
- Seat ventilation
- Panel heating

Depending on the vehicle's equipment, the following functions will also be adjusted during pre-entry climate control if they have already been switched on during regular vehicle operation:

- Fragrancing
- Ionization

Air vents

Adjusting the front air vents

⚠ **WARNING** Risk of burns or frostbite due to being too close to the air vents

Very hot or very cold air can flow from the air vents.

▶ Make sure that all vehicle occupants always maintain a sufficient distance from the air vents.

▶ If necessary, direct the airflow to another area of the vehicle interior.

To guarantee the flow of fresh air through the air vents into the vehicle interior, note the following:

- Always keep the vents and ventilation grilles in the vehicle interior clear.
- Keep the air inlet free of residue build-up (⟶ page 512).

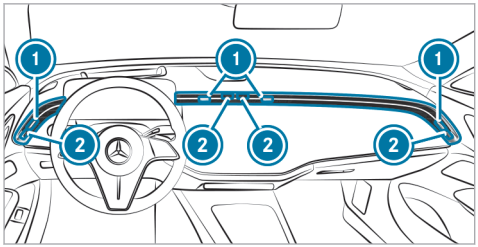

- **To set the airflow direction of the side air vents:** hold controller (1) and move it up or down or to the left or right.
- **To set the airflow direction of the center air vents:** hold controller (1) and move it up or down or to the left or right.
- **To open or close the side air vents:** turn respective controller (2) up or down as far as it will go.
- **To open or close the center air vents:** turn respective controller (2) to the left or right as far as it will go.

ⓘ The airflow direction for the first row of seats can also be adjusted electrically via the multimedia system (→ page 224).

Adjusting the rear air vents

⚠ **WARNING** Risk of burns or frostbite due to being too close to the air vents

Very hot or very cold air can flow from the air vents.

- Make sure that all vehicle occupants always maintain a sufficient distance from the air vents.
- If necessary, direct the airflow to another area of the vehicle interior.

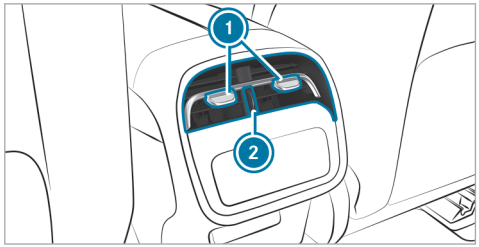

- **To open or close:** turn controller (2) up or down as far as it will go.
- **To set the airflow direction:** hold the center of controller (1) and move it up or down or to the left or right.

Adjusting the rear side air vents

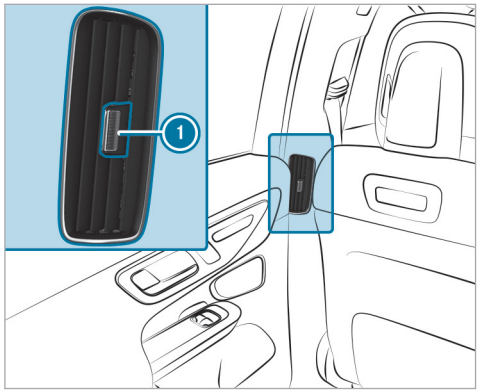

- **To open or close the side air vents in the rear passenger compartment:** hold the controller of side air vent (1) and move it to the left or right as far as it will go.
- **To set the airflow direction of the side air vents:** hold controller (1) and move it up or down or to the left or right.

Driving

Switching on the power supply or the vehicle

WARNING Risk of accident and injury due to children left unattended in the vehicle

If you leave children unattended in the vehicle, they could, in particular:

- open doors, thereby endangering other persons or road users.
- get out and be struck by oncoming traffic.
- operate vehicle equipment and become trapped, for example.

In addition, the children could also set the vehicle in motion by, for example:

- releasing the parking brake.
- changing the gearbox position.
- starting the vehicle.

▶ Never leave children unattended in the vehicle.

▶ When leaving the vehicle, always take the key with you and lock the vehicle.

▶ Keep the key out of reach of children.

This also applies to the Digital Vehicle Key.

Requirements

- The key is in the vehicle and is detected.
- **Vehicles with Digital Vehicle Key:** a Digital Vehicle Key with drive authorization is detected.
- The brake pedal is not depressed.

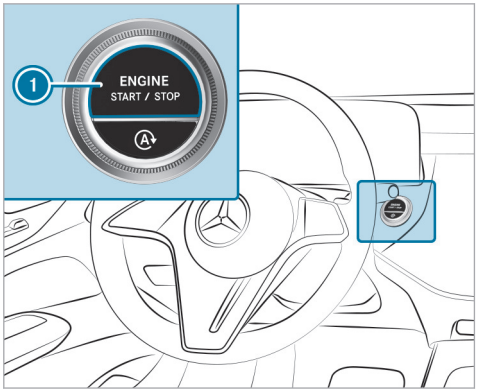

▶ **To switch on the power supply:** press button (1) once.
You can, for example, switch on the windshield wiper.

The power supply will be switched off again if the following conditions are met:

- You open the driver's door.
- You press button (1) twice more.

▶ **To switch on the vehicle:** press button (1) twice.
Indicator and warning lamps will light up on the driver's display.

The vehicle will be switched off again if one of the following conditions is met:

- You do not start the vehicle within 15 minutes and the transmission is in position P or the electric parking brake is applied.
- You press button (1) once.

Starting the vehicle

Starting the vehicle with the start/stop button

⚠ **DANGER** Risk of death caused by exhaust gases

Combustion engines emit poisonous exhaust gases such as carbon monoxide. Inhaling these exhaust gases is hazardous to health and leads to poisoning.

▶ Never leave the engine or, if present, the auxiliary heating running in an enclosed space without sufficient ventilation.

⚠ **WARNING** Risk of fire due to flammable materials in the engine compartment or on the exhaust system

Flammable materials may ignite.

▶ Therefore, regularly check that there are no flammable foreign materials in the engine compartment or on the exhaust system.

⚠ **WARNING** Risk of accident and injury due to children left unattended in the vehicle

If you leave children unattended in the vehicle, they could, in particular:

- open doors, thereby endangering other persons or road users.
- get out and be struck by oncoming traffic.
- operate vehicle equipment and become trapped, for example.

In addition, the children could also set the vehicle in motion by, for example:

- releasing the parking brake.
- changing the gearbox position.
- starting the vehicle.

▶ Never leave children unattended in the vehicle.

▶ When leaving the vehicle, always take the key with you and lock the vehicle.

▶ Keep the key out of reach of children.

This also applies to the Digital Vehicle Key.

Requirements

- The key is in the vehicle and is detected.
- **Vehicles with Digital Vehicle Key:** a Digital Vehicle Key with drive authorization is detected.

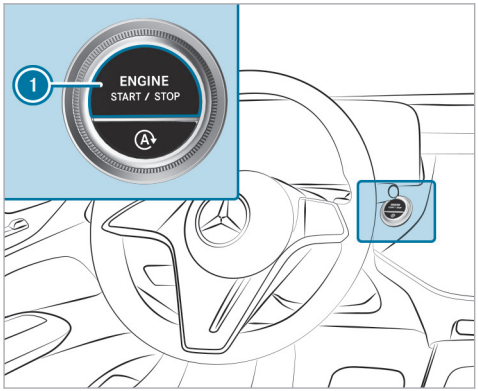

- Shift the transmission to position P or N.
- depress the brake pedal and press button 1 once.
- If the vehicle does not start: switch off non-essential consumer equipment and press button 1 once.
- If the vehicle still does not start and the Place the Key in the Marked Space See Operator's Manual display message appears on the driver's display: start the vehicle with the key in the marked space (emergency operation mode) (→ page 237).

ⓘ You can switch off the vehicle while driving. To do this, press and hold button 1 for about three seconds or press button 1 three times within three seconds. Be sure to observe the safety notes concerning this under "Driving tips" (→ page 241).

Observe any information regarding display messages that may be shown on the driver's display.

Start the vehicle with the Digital Vehicle Key in the marked space (emergency operation mode)

⚠ DANGER Risk of death caused by exhaust gases

Combustion engines emit poisonous exhaust gases such as carbon monoxide. Inhaling these exhaust gases is hazardous to health and leads to poisoning.

- Never leave the engine or, if present, the auxiliary heating running in an enclosed space without sufficient ventilation.

⚠ WARNING Risk of fire due to flammable materials in the engine compartment or on the exhaust system

Flammable materials may ignite.

- Therefore, regularly check that there are no flammable foreign materials in the engine compartment or on the exhaust system.

⚠ WARNING Risk of accident and injury due to children left unattended in the vehicle

If you leave children unattended in the vehicle, they could, in particular:

- open doors, thereby endangering other persons or road users.
- get out and be struck by oncoming traffic.

- operate vehicle equipment and become trapped, for example.

In addition, the children could also set the vehicle in motion by, for example:

- releasing the parking brake.
- changing the gearbox position.
- starting the vehicle.

▶ Never leave children unattended in the vehicle.

▶ When leaving the vehicle, always take the key with you and lock the vehicle.

▶ Keep the key out of reach of children.

This also applies to the Digital Vehicle Key.

Requirements

- The vehicle is equipped with the "Digital Vehicle Key" pre-installation.
- A suitable end device is activated as a Digital Vehicle Key.

ⓘ Mercedes-Benz recommends that you carry the emergency key in case of function restrictions.

If the vehicle does not start and the Searching for Key in Stowage Tray or Digital Vehicle Key in Inductive Charging Bracket... See Operator's Manual display message appears on the driver's display, you can start the vehicle in emergency operation mode.

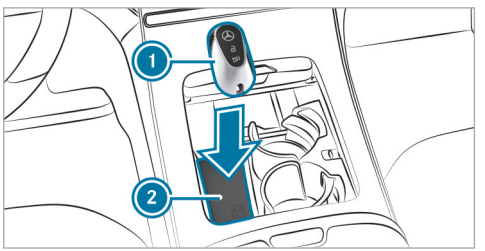

▶ Place key ① in stowage compartment ②.

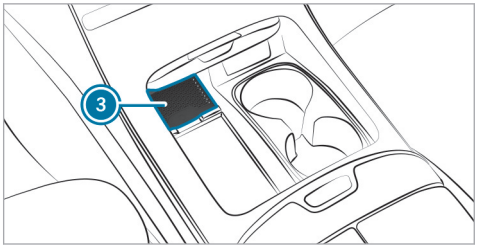

▶ Place the Digital Vehicle Key in marked space ③.

▶ Depress the brake pedal and start the vehicle using the start/stop button.
It may take a few seconds until the vehicle starts.

▶ When the Key Not Detected display message appears on the driver's display, press the Start/Stop button again.

Starting the vehicle with the key in the marked space (emergency operation mode)

DANGER Risk of death caused by exhaust gases

Combustion engines emit poisonous exhaust gases such as carbon monoxide. Inhaling these exhaust gases is hazardous to health and leads to poisoning.

- Never leave the engine or, if present, the auxiliary heating running in an enclosed space without sufficient ventilation.

WARNING Risk of fire due to flammable materials in the engine compartment or on the exhaust system

Flammable materials may ignite.

- Therefore, regularly check that there are no flammable foreign materials in the engine compartment or on the exhaust system.

WARNING Risk of accident and injury due to children left unattended in the vehicle

If you leave children unattended in the vehicle, they could, in particular:

- open doors, thereby endangering other persons or road users.
- get out and be struck by oncoming traffic.
- operate vehicle equipment and become trapped, for example.

In addition, the children could also set the vehicle in motion by, for example:

- releasing the parking brake.
- changing the gearbox position.
- starting the vehicle.

- Never leave children unattended in the vehicle.
- When leaving the vehicle, always take the key with you and lock the vehicle.
- Keep the key out of reach of children.

This also applies to the Digital Vehicle Key.

If the vehicle does not start and the Place the Key in the Marked Space See Operator's Manual display message appears on the driver's display, you can start the vehicle in emergency operation mode.

Vehicles with Digital Vehicle Key: If the vehicle does not start and the Searching for Key in Stowage Tray or Digital Vehicle Key in Inductive Charging Bracket... See Operator's Manual display message appears on the driver's display, you can start the vehicle in emergency operation mode.

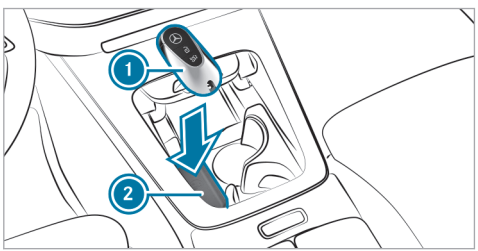

- Make sure that marked space (2) is empty.
- Remove key (1) from the key ring.

F214 0032 13

- Place key (1) on the symbol in marked space (2).
  The vehicle will start after a short time.
  If you remove key (1) from marked space (2), the vehicle can still be driven. For further engine starts, however, key (1) must be located on the symbol in marked space (2) during the entire trip.
- Have key (1) checked at a qualified specialist workshop.

If the vehicle does not start:

- Place key (1) in marked space (2) and leave it there.
- Depress the brake pedal and start the vehicle using the start/stop button.

ⓘ You can switch on the power supply or the vehicle with the start/stop button.

Observe any information regarding display messages that may be shown on the driver's display.

Starting the vehicle via Remote Online Services

Cooling or heating the vehicle interior before starting the journey

Ensure the following before starting the engine:

- The legal stipulations in the area where your vehicle is parked allow engine starting via smartphone.
- It is safe to start and run the engine where your vehicle is parked.
- The fuel tank is sufficiently full.
- The starter battery is sufficiently charged.

Charging the starter battery before starting the journey

You can receive a message on your smartphone when the state of charge of the starter battery is low. You can then start the vehicle with the smartphone to charge the battery. The vehicle is automatically switched off after ten minutes.

Ensure the following before starting the engine:

- The legal stipulations in the area where your vehicle is parked allow engine starting via smartphone.
- It is safe to start and run the engine where your vehicle is parked.
- The fuel tank is sufficiently full.

Starting the vehicle (Remote Online)

⚠ **DANGER** Risk of death caused by exhaust gases

Combustion engines emit poisonous exhaust gases such as carbon monoxide. Inhaling these exhaust gases is hazardous to health and leads to poisoning.

- Never leave the engine or, if present, the auxiliary heating running in an enclosed space without sufficient ventilation.

⚠ **WARNING** Risk of fire due to flammable materials in the engine compartment or on the exhaust system

Flammable materials may ignite.

- Therefore, regularly check that there are no flammable foreign materials in the

engine compartment or on the exhaust system.

⚠ WARNING Risk of crushing or entrapment due to unintentional starting of the engine

Limbs could be crushed or trapped if the engine is started unintentionally during service or maintenance work.

- Always secure the engine against unintentional starting before carrying out maintenance or repair work.

⚠ WARNING Risk of accident and injury due to children left unattended in the vehicle

If you leave children unattended in the vehicle, they could, in particular:

- open doors, thereby endangering other persons or road users.
- get out and be struck by oncoming traffic.
- operate vehicle equipment and become trapped, for example.

In addition, the children could also set the vehicle in motion by, for example:

- releasing the parking brake.
- changing the gearbox position.
- starting the vehicle.

- Never leave children unattended in the vehicle.
- When leaving the vehicle, always take the key with you and lock the vehicle.
- Keep the key out of reach of children.

Requirements

- Park position P is selected.
- The anti-theft alarm system is not activated.
- The panic alarm is not activated.
- The hazard warning light system is switched off.
- The hood is closed.
- The doors are closed and locked.
- The windows and sliding sunroof are closed.

- Start the vehicle using the smartphone. After every engine start, the engine runs for ten minutes.

You can carry out a maximum of two consecutive starting attempts. You must start the engine with the key before trying to start the vehicle again with the smartphone.

You can switch off the vehicle at any time as follows:

- Via the smartphone app
- By pressing the  or  button on the key

ⓘ Further information can be found in the smartphone app.

Securing the vehicle against starting before carrying out maintenance or repair work:

- Switch on the hazard warning light system.

or

- Unlock the doors.

or

- Open a side window or the sliding sunroof.

Notes on breaking-in a new vehicle

To preserve the engine during the first 1000 miles (1500 km):

- Drive at varying road speeds and engine speeds.
- No faster than 85 mph (140 km/h).
- Drive the vehicle in drive mode C or E.
- Shift to the next higher gear at the very latest when the needle reaches the last third before the red area in the tachometer.
- Do not shift down manually in order to brake.
- Avoid overstraining the vehicle, e.g. driving at full throttle.
- Do not depress the accelerator pedal past the pressure point (kickdown).
- Only increase the engine speed gradually and accelerate the vehicle to full speed after 1000 miles (1500 km).

This also applies when the engine or parts of the drivetrain have been replaced.

Please also observe the following breaking-in notes:

- In certain handling and driving safety systems, the sensors adjust automatically while a certain distance is being driven after the vehicle has been delivered or after repairs. Full system effectiveness is only reached when this teaching-in process has concluded.
- Brake pads, brake disks and tires that are either new or have been replaced achieve optimum braking effect and grip only after the vehicle has been driven several hundred kilometers. Compensate the reduced braking effect by applying greater force to the brake pedal.

Notes on optimized acceleration

If all necessary requirements and activation conditions are fulfilled, the best possible acceleration can be achieved from a standstill.

Do not use optimized acceleration on public roads. Individual wheels could spin and you could lose control of the vehicle. There is an increased risk of skidding and/or accident.

Be sure to observe the safety notes and information on ESP® (→ page 275).

Pulling away with optimized acceleration

WARNING Risk of skidding and accidents due to the wheels spinning

If you pull away using optimized acceleration, individual wheels can spin and the vehicle can skid.

There is an increased risk of skidding and accidents, especially when ESP® is switched off!

- Make sure that there are no persons or obstacles in the vicinity of the vehicle.

Requirements

- the vehicle is broken in (→ page 240).
- the vehicle and tires are in good condition.
- the roadway has a high-grip surface.
- the engine and transmission are at normal operating temperature.

NOTE Increased wear due to optimized acceleration

When pulling away with optimized acceleration, all components of the drivetrain are subjected to a very high load.

This can lead to increased component wear.

- Do not always pull away with optimized acceleration.

- Engage the D drive position (→ page 255).
- Move the steering wheel to the straight-ahead position.
- Select the drive program S (→ page 249).
- Deactivating ESP® (→ page 276).
- Depress and hold the brake pedal firmly with your left foot.
- With your right foot, fully depress the accelerator pedal.
- After no more than five seconds, take your left foot quickly off the brake, but keep the accelerator pedal depressed.
  The vehicle will pull away at maximum acceleration.
- Switch on ESP® once the acceleration procedure is complete.

Ending optimized acceleration

- Remove your foot from the accelerator pedal.
- Reactivate ESP®.

ⓘ After you pull away with optimized acceleration, components of the drivetrain can become very hot, which means that optimized acceleration values may only be reached again after a few minutes.

Notes on driving

WARNING Risk of accident due to objects in the driver's footwell

Objects in the driver's footwell may impede pedal travel or block a depressed pedal.

This jeopardizes the operating and road safety of the vehicle.

- Stow all objects in the vehicle securely so that they cannot get into the driver's footwell.
- Always install the floor mats securely and as prescribed in order to ensure that there is always sufficient room for the pedals.
- Do not use loose floor mats and do not place floor mats on top of one another.

WARNING Risk of accident due to incorrect footwear

Incorrect footwear includes, for example:

- Shoes with platform soles
- Shoes with high heels
- Slippers

There is a risk of an accident.

- Always wear suitable footwear so that you can operate the pedals safely.

WARNING Risk of accident if the vehicle is switched off while driving

If you switch off the vehicle while driving, safety functions are restricted or no longer available.

This may affect the power steering system and the brake force boosting, for example.

You will need to use considerably more force to steer and brake, for example.

- Do not switch off the vehicle while driving.

DANGER Risk of death caused by exhaust gases

Combustion engines emit poisonous exhaust gases such as carbon monoxide. Inhaling these exhaust gases is hazardous to health and leads to poisoning.

- Never leave the engine or, if present, the auxiliary heating running in an enclosed space without sufficient ventilation.

WARNING Risk of skidding and of an accident due to shifting down on slippery road surfaces

If you shift down on slippery road surfaces to increase the engine braking effect, the drive wheels may lose traction.

- Do not shift down on slippery road surfaces to increase the engine braking effect.

DANGER Risk of fatal injury due to poisonous exhaust gases

If the tailpipe is blocked or sufficient ventilation is not possible, poisonous exhaust gases such as carbon monoxide may enter the vehicle. This is the case, for example, if the vehicle gets stuck in the snow.

- Keep the tailpipe and the area around the vehicle free from snow when the engine or the stationary heater is running.
- Open a window on the side of the vehicle facing away from the wind to ensure an adequate supply of fresh air.

WARNING Risk of accident and injury due to being under the influence of alcohol and drugs while driving

Drinking and driving and/or taking drugs and driving are very dangerous combinations. Even a small amount of alcohol or drugs can affect your reflexes, perceptions and judgment.

The possibility of a serious or even fatal accident are greatly increased when you drink or take drugs and drive.

- Do not drink or take drugs and drive or allow anyone to drive who has been drinking or taking drugs.

WARNING Risk of accident due to the brake system overheating

If you leave your foot on the brake pedal when driving, the brake system may overheat.

This increases the braking distance and the brake system can even fail.

- Never use the brake pedal as a footrest.
- Do not depress the brake pedal and the accelerator pedal at the same time while driving.

NOTE Engine damage due to excessively high engine speeds

The engine will be damaged if you drive with the engine in the overrevving range.

- Do not drive with the engine in the overrevving range.

NOTE Wearing out the brake linings by continuously depressing the brake pedal

- Do not depress the brake pedal continuously whilst driving.
- To use the braking effect of the engine, shift to a lower gear in good time.

NOTE Damage to the drivetrain and engine when pulling away

- Do not warm up the engine while the vehicle is stationary. Pull away immediately.
- Avoid high engine speeds and driving at full throttle until the engine has reached its operating temperature.

NOTE Damage to the catalytic converter due to non-combusted fuel

The engine is not running smoothly and is misfiring.

Non-combusted fuel may get into the catalytic converter.

- Only depress the accelerator pedal slightly.
- Have the cause rectified immediately at a qualified specialist workshop.

NOTE Reduced battery life due to frequent short-distance trips

The 12 V battery may not be sufficiently charged when the vehicle is used only for short-distance trips. This reduces the life of the battery.

- Drive longer distances regularly to charge the battery.

NOTE Vehicle damage due to failure to observe the maximum permissible clearance height

If the vehicle height exceeds the maximum permissible clearance height, the roof and other vehicle parts may be damaged.

- Please observe the maximum clearance height indicated.
- If the vehicle exceeds the permissible clearance height, do not drive in.
- Take the modified vehicle height into account in the case of roof superstructures or other carrier systems.

ⓘ Bear in mind that all the speed values stated in this Operator's Manual are approximate and are subject to a certain tolerance.

Notes on driving with a roof load, trailer or fully laden vehicle

When driving with a loaded roof luggage rack or trailer as well as with a fully laden or fully occupied vehicle, your vehicle's driving and steering characteristics will change.

You should bear the following in mind:

- Do not exceed the permissible roof load and towing capacity. Also observe the information in the Technical Data.
- Distribute the roof load and the load inside the vehicle evenly, placing heavy objects at the bottom. Also comply with the notes on loading the vehicle (⟶ page 180).
- Drive carefully, and avoid abrupt starts, braking and steering as well as rapid cornering.

Advice on driving on salt-strewn roads

The braking effect is limited on salt-strewn road surfaces.

You should therefore observe the following notes:

- Salt build-up on the brake disks and brake pads can cause the braking distance to increase considerably or result in one-sided braking.
- Maintain a much greater safety distance to the vehicle in front.

Remove salt build-up as follows:

- Brake occasionally, paying attention to the traffic conditions.
- Carefully depress the brake pedal at the end of a journey and when starting the next journey.

Notes on hydroplaning

Hydroplaning can take place if a certain depth of water has built up on the road surface.

Observe the following notes during heavy precipitation or in conditions in which hydroplaning may occur:

- Reduce your speed.
- Avoid tire ruts.
- Avoid sudden steering movements.
- Brake carefully.

ⓘ Also observe the notes on regularly checking wheels and tires (⟶ page 29).

Notes on driving through water on the road

Water ingress can damage the engine, electrics and transmission.

Water can also enter the air intake of the engine and cause engine damage.

Observe the following notes if you have to drive through water:

- The water, when calm, may reach no higher than the lower edge of the vehicle body.
- Drive at walking pace at most; water may otherwise enter the vehicle interior or engine compartment.
- Vehicles in front or oncoming vehicles can create waves that may exceed the maximum permissible depth of water.

The braking effect of the brakes is reduced after you have driven through water. Brake carefully, paying attention to the traffic conditions, until braking effect has been fully restored.

Function of rear axle steering

The rear axle steering is an electromechanical auxiliary steering on the rear axle which adjusts the steering of the rear wheels according to the position of the front wheels, depending on the speed. This results in greater maneuverability and improved driving stability for the vehicle.

Rear axle steering has the following characteristics:

- reduced steering effort and turning circle resulting in reduced parking effort
- more direct steering resulting in improved control of the vehicle
- improved cornering of the vehicle

Observe the notes on snow chains and snow chain mode (→ page 546).

ECO start/stop function

ECO start/stop function

ⓘ Depending on the engine, the ECO start/stop function is not available in all drive programs.

Observe the status display in the driver's display for this.

The engine will be switched off automatically in the following situations if all vehicle conditions for an automatic engine stop are met:

- You brake the vehicle to a standstill in transmission position D or N.
- You depress the brake pedal when traveling at a low speed.

If the system has detected one of the following situations, the engine will not stop:

- You stop at a stop sign and there is no vehicle in front of you.
- The vehicle that stopped in front of you sets off again.
- You maneuver, turn the steering wheel sharply or engage reverse gear.

ⓘ If the system detects an intelligent stop inhibitor, e.g. a stop sign, the engine will not stop. If you activate the HOLD function or engage park position P, the engine can be switched off in spite of an intelligent stop inhibitor.

The engine will restart automatically in the following cases:

- You engage transmission position D or R.
- You depress the accelerator pedal.
- The vehicle requires an automatic engine start.
- You release the brake pedal.
- You release the brake pedal on a downhill gradient and the vehicle does not roll.
- The vehicle rolls on a downhill gradient and does not automatically enter glide mode at 15 mph (20 km/h).

ECO start/stop function symbols on the driver's display:

- The Ⓐ symbol (green) appears when the vehicle is at a standstill: the engine was switched off by the ECO start/stop function.
- The Ⓐ symbol (yellow) appears when the vehicle is at a standstill: not all vehicle conditions for an engine stop have been met.
- Neither the Ⓐ symbol nor the Ⓐ symbol appears when the vehicle is at a standstill: an

intelligent stop inhibitor, e.g. a stop sign, has been detected.

- The [A OFF] symbol appears: the ECO start/stop function is deactivated or there is a malfunction.

If the engine was switched off by the ECO start/stop function and you leave the vehicle, a warning tone will sound and the engine will not be restarted. In addition, the following display message will appear on the driver's display:

Vehicle is Ready to Drive Switch Off Vehicle Before Exiting

If you do not switch off the vehicle, it will automatically be switched off after three minutes.

Switching the ECO start/stop function on/off

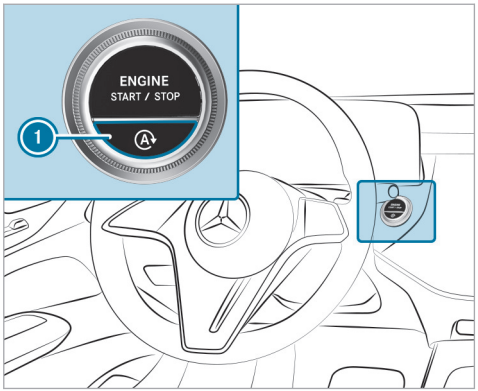

▶ Press button (1).
A display will appear on the driver's display when you switch the ECO start/stop function on/off.

ⓘ [A OFF] will be continuously shown on the driver's display while the ECO start/stop function is deactivated.

ECO display function

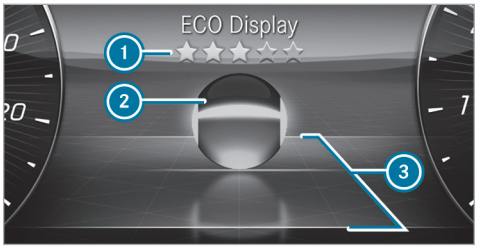

The ECO display shows an evaluation of your driving style on the driver's display depending on the situation. This enables you to check the efficiency of your driving style and adjust it if necessary. The ECO Display menu shows ball (2) that will roll forwards or backwards on a stylized road in the direction of travel according to the driving characteristics.

Above and below the road, lines mark the area for an efficient driving style (3). Ball (2) will light up in green if it is rolling within these lines. Outside the lines, the ball will light up in orange.

The ECO display assesses the following criteria for an economical driving style:

- coasting at the right times
- consistent speed
- moderate acceleration

The overall assessment of your driving style "from start" is indicated using stars (1). It starts with five empty stars, which you can fill one after the other if you drive efficiently. When all five stars are filled, a glow will appear in the background.

ⓘ You can call up the ECO Display function via the Classic menu (→ page 349).

ECO Assist function (vehicles with 48 V on-board electrical system)

ⓘ ECO Assist is active only in drive programs E and C.

ECO Assist analyzes data for the vehicle's expected route. This allows the system to optimally adjust the driving style for the route ahead, save fuel and recuperate. If the system detects an event ahead and the vehicle nears the event, ECO Assist will calculate the optimum speed for maximum fuel economy and recuperative energy based on the distance, speed and downhill gradient.

If the deceleration provided by ECO Assist is not sufficient, you must also brake with the service brake. This is especially the case if, for example, you pull away again in slow-moving traffic and the distance to the vehicle in front is very short.

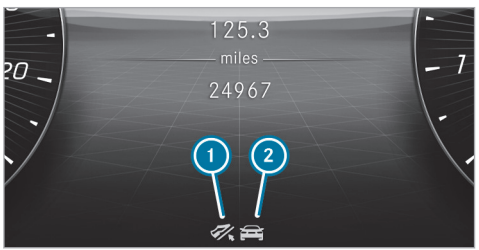

(1) "Foot off the accelerator" recommendation
(2) Route event ahead

If a route event ahead or a vehicle driving in front is detected which requires an adjustment to your driving style to ensure greater efficiency, corresponding symbol (2) and the symbol will be displayed in gray.

If you release the accelerator pedal, the symbol will turn green and recuperation in overrun mode will be initiated. If the deceleration is not sufficient, also apply the service brake. If ECO Assist intervenes for a route event ahead (not for a vehicle in front) and you then press the accelerator pedal again, you end ECO Assist's control.

The ECO Assist display is hidden again in the following cases:

- You do not react to the ECO Assist recommendation for a long time.
- You press the accelerator pedal while ECO Assist is intervening for a route event ahead (not for a vehicle in front).
- ECO Assist cannot identify any further recommendations from the route ahead.

In addition to a vehicle in front, ECO Assist can detect the following route events (2) depending on the vehicle's equipment:

Traffic circle

- Sharp bend
- Intersection
- T-intersection
- Downhill gradient
- Speed limit

ⓘ In drive program C, ECO Assist reacts only to the "Vehicle in front" route event .

System limits

If the calculated route is adhered to when route guidance is active, ECO Assist will operate with greater accuracy. The basic function is also available without active route guidance. Not all information and traffic situations can be foreseen. The quality depends on the map data.

ECO Assist is only an aid. The driver is responsible for keeping a safe distance from the vehicle in front, for vehicle speed and for braking in good time.

The system may be impaired or may not function in the following situations:

- If there is poor visibility, e.g. due to insufficient illumination of the road, highly variable shade conditions, rain, snow, fog or heavy spray.
- If there is glare, e.g. from oncoming traffic, direct sunlight or reflections.
- If the windshield is dirty in the vicinity of the multifunction camera.
- If the multifunction camera is fogged up, damaged or obscured.
- If road signs are hard to detect, e.g. due to dirt, snow or insufficient lighting, or because they are obscured.
- If the digital road map of the navigation system has incorrect or outdated information.
- If signs are ambiguous, e.g. road signs in roadworks or in adjacent lanes.
- If the radar sensors are dirty or obscured.
- When you drive on roads with steep uphill or downhill gradients.
- If there are narrow vehicles in front, such as bicycles or motorcycles.

F214 0032 13

DYNAMIC SELECT

Function of DYNAMIC SELECT

DYNAMIC SELECT makes the quick selection of a drive program possible in accordance with the current driving situation or the desired vehicle characteristics. You can select from the following drive programs.

ⓘ Depending on the engine and equipment, the vehicle has different drive programs.

The drive program selected appears in the driver's display .

I Individual

- Individual settings (→ page 250)

S Sport

- The maximum drive output is available
- Sporty driving
- Sporty, but with an emphasis on stability
- Enables a sporty driver to adopt a more active driving style
- Only suitable for good road conditions, a dry road surface and a clear stretch of road

- **Vehicles with AIRMATIC:** lowers the vehicle to low level -1

C Comfort

- Comfortable and economical driving
- Balance between traction and stability
- Recommended for all road conditions
- **Vehicles with AIRMATIC:**
  - Adjusting the vehicle to normal level
  - From 75 mph (120 km/h): lowers the vehicle to low level -1
  - Below 50 mph (80 km/h): raises the vehicle to normal level

E Eco

- Particularly economical driving
- Balance between traction and stability
- Recommended for all road conditions
- **Vehicles with AIRMATIC:** lowers the vehicle to low level -1

ⓘ The ESP® settings in the drive programs E and C are designed for stability. Therefore, choose one of these drive programs especially when transporting roof loads, in trailer operation and when the vehicle is fully loaded or fully occupied.

ⓘ **Vehicles with AIRMATIC:** at speeds below approx. 37 mph (60 km/h), you can also manually raise the vehicle to off-road level +1 in any drive program (→ page 318).

Depending on the drive program, the following systems will change their characteristics:

- Drive
  - Engine and transmission management
  - Active Distance Assist DISTRONIC
  - Availability of Glide mode
- ESP®
- **Vehicles with AIRMATIC:** suspension
  - Suspension and damping
  - Vehicle level
- Steering
- Sound characteristics of the engine in the vehicle interior

Selecting the drive program

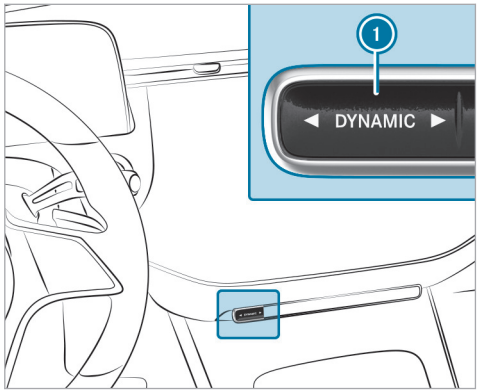

▶ Press DYNAMIC SELECT button 1 on the left or right.
The drive program selected appears in the driver's display.

Configuring DYNAMIC SELECT in the multimedia system

Multimedia system:

→ ⌂ ›› Settings ›› Vehicle ›› DYNAMIC SELECT

Setting drive program I

- ▶ Select I* Individual.
- ▶ Select and set a category.

ⓘ A sporty ESP mode can be set in conjunction with a sporty suspension mode.

Configuring DYNAMIC SELECT in the MMS (plug-in hybrid)

Multimedia system:

→ ⌂ ›› Settings ›› Vehicle ›› DYNAMIC SELECT

Setting drive program I

- ▶ Select I* Individual.
- ▶ Select and set a category.

Displaying vehicle data

Multimedia system:

→ ⌂ ›› Info

- ▶ Select Vehicle.

The vehicle data is displayed.

Displaying engine data

Multimedia system:

→ ⌂ ›› Info

- ▶ Select Engine.

The engine data is displayed.

ⓘ The actual (maximum) values that can be achieved for engine output and engine torque may deviate from the certified values within the country-specific guidelines for permissible tolerances (basis: UN-ECE No. 85 or country-specific guidelines).

Influencing variables that can influence this are, for example:

- Sea level
- Fuel grade
- Outside temperature
- Operating temperature of the engine

Adjust your driving style accordingly.

The 🌡 warning lamp in the driver's display is on until the engine has reached operating temperature.

ⓘ The values displayed serve only as orientation. The values for engine output and engine torque shown on the central display may deviate from the actual values.

ⓘ The 🌡 warning lamp to show the power output limitation after starting the vehicle is not available in all vehicle models.

Automatic transmission

DIRECT SELECT lever

Function of the DIRECT SELECT lever

WARNING Risk of accident due to incorrect gearshifting

If the engine speed is higher than the idle speed and you engage the transmission position D or R, the vehicle may accelerate sharply.

- If you engage the transmission position D or R when the vehicle is at a standstill, always depress the brake pedal firmly and do not accelerate at the same time.

WARNING Risk of accident and injury due to children left unattended in the vehicle

If you leave children unattended in the vehicle, they could, in particular:

- open doors, thereby endangering other persons or road users.
- get out and be struck by oncoming traffic.
- operate vehicle equipment and become trapped, for example.

In addition, the children could also set the vehicle in motion by, for example:

- releasing the parking brake.
- changing the gearbox position.
- starting the vehicle.

- Never leave children unattended in the vehicle.
- When leaving the vehicle, always take the key with you and lock the vehicle.
- Keep the key out of reach of children.

Use the DIRECT SELECT lever to switch the transmission position. The current transmission position will be shown on the driver's display.

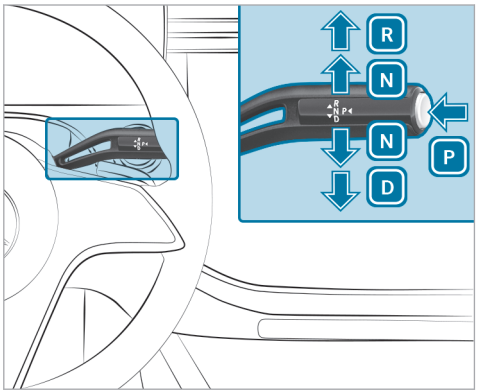

P Park position
R Reverse gear
N Neutral
D Drive position

Engaging reverse gear R

WARNING Risk of accident due to incorrect gearshifting

If the engine speed is higher than the idle speed and you engage the transmission position D or R, the vehicle may accelerate sharply.

- If you engage the transmission position D or R when the vehicle is at a standstill, always depress the brake pedal firmly and do not accelerate at the same time.

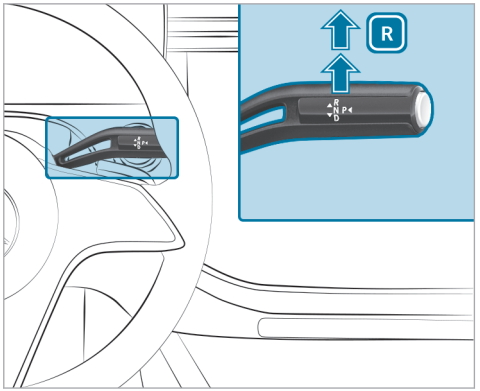

- Depress the brake pedal and push the DIRECT SELECT lever upwards past the first point of resistance.

Engaging neutral N

WARNING Risk of accident due to incorrect gearshifting

If the engine speed is higher than the idle speed and you engage the transmission position D or R, the vehicle may accelerate sharply.

- If you engage the transmission position D or R when the vehicle is at a standstill, always depress the brake pedal firmly and do not accelerate at the same time.

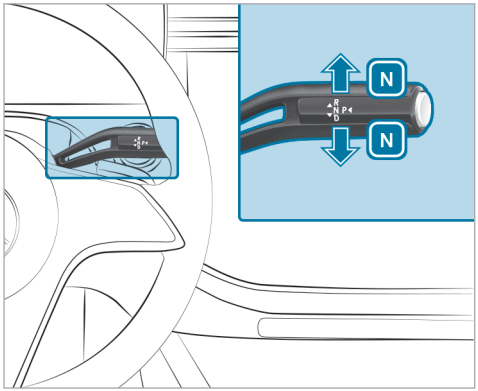

- Depress the brake pedal and push the DIRECT SELECT lever up or down to the first point of resistance.

ⓘ To shift into neutral N with the vehicle switched on, push the selector lever up or down for several seconds to the first point of resistance.

Subsequently releasing the brake pedal will allow you to move the vehicle freely, e.g. to push it or tow it away.

Proceed as follows if you want the automatic transmission to remain in neutral N, even if the vehicle is switched off or the driver's door is opened:

- Depress the brake pedal and engage neutral N when the vehicle is at a standstill.
- Release the brake pedal.
- Switch off the vehicle.

The Risk of Vehicle Rolling Away N Activated Manually No Automatic Change to P message appears in the driver's display.

ⓘ If you then exit the vehicle leaving the key in the vehicle, the automatic transmission remains in neutral N.

The park position P is automatically re-engaged as soon as one of the following conditions is met:

- You switch to transmission position D or R.
- You press the button P.

Engaging park position P

⚠ **WARNING** Risk of accident and injury due to children left unattended in the vehicle

If you leave children unattended in the vehicle, they could, in particular:

- open doors, thereby endangering other persons or road users.
- get out and be struck by oncoming traffic.
- operate vehicle equipment and become trapped, for example.

In addition, the children could also set the vehicle in motion by, for example:

- releasing the parking brake.
- changing the gearbox position.
- starting the vehicle.

- Never leave children unattended in the vehicle.
- When leaving the vehicle, always take the key with you and lock the vehicle.
- Keep the key out of reach of children.

NOTE Damage due to engaging park position P while the vehicle is rolling

If you shift the transmission into park position P while the vehicle is rolling, the transmission may be damaged.

- If the vehicle is rolling, do not open a door.
- Only engage park position P when the vehicle is stationary.

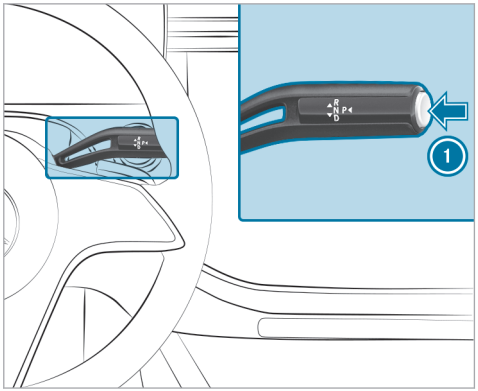

F214 0032 13

- Observe the notes on parking the vehicle (→ page 260).
- Depress the brake pedal until the vehicle comes to a standstill.
- When the vehicle is stationary, press button 1.
  When the transmission position display shows P, the park position is engaged. If the transmission position display P is not shown, apply the parking brake and secure the vehicle to prevent it from rolling away.

ⓘ Depending on the situation, it may take a short time until P is engaged. Therefore, always pay attention to the transmission position display.

Park position P will be engaged automatically if one of the following conditions is met:

- You switch the stationary vehicle off in transmission position D or R.
- You open the driver's door when the vehicle is stationary in transmission position D or R.
- When the vehicle is rolling, you switch if off in transmission position D or R and bring it to a standstill.
- When the vehicle is rolling, you shift to transmission position N, bring the vehicle to a standstill and open the driver's door when the vehicle is stationary.
- Engaging park position P automatically is required by the vehicle.

ⓘ To maneuver with an open driver's door, open the driver's door while the vehicle is stationary and engage transmission position D or R again.

Engaging drive position D

⚠ WARNING Risk of accident due to incorrect gearshifting

If the engine speed is higher than the idle speed and you engage the transmission position D or R, the vehicle may accelerate sharply.

- If you engage the transmission position D or R when the vehicle is at a standstill, always depress the brake pedal firmly and do not accelerate at the same time.

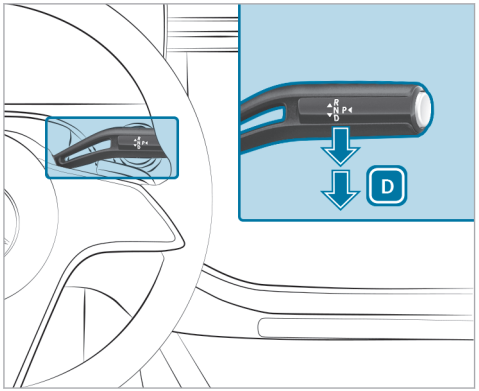

- Depress the brake pedal and push the DIRECT SELECT lever down past the first point of resistance.

When the automatic transmission is in transmission position D, it will shift gears automatically. This depends, among other things, on the following factors:

- The selected drive program
- The position of the accelerator pedal
- The driving speed

F214 0032 13

Manual gearshifting

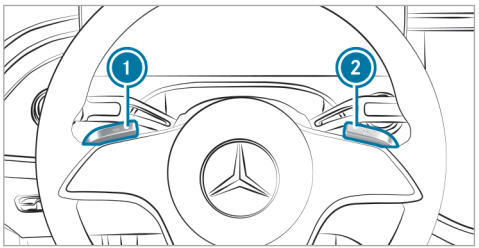

When the automatic transmission is shifted to position D, you can manually shift it with the steering wheel paddle shifter. If permitted, the automatic transmission will shift to a higher or lower gear depending on which steering wheel paddle shifter is pulled.

You have two options for manually shifting the automatic transmission:

- temporary setting
- permanent setting

The gears will shift automatically when manual shifting is deactivated.

Temporary setting:

- **To activate:** pull steering wheel paddle shifter (1) or (2).
  Manual shifting will be activated for a short time. The transmission position display will show M and the current gear.

ⓘ How long manual shifting stays activated depends on various factors.

Manual shifting can be deactivated automatically in the following cases:

- When the drive program is changed
- When the vehicle is restarted
- When transmission position D is engaged again
- Driving style

- **To shift up:** pull steering wheel paddle shifter (2).
- **To shift down:** pull steering wheel paddle shifter (1).
- **To deactivate:** pull steering wheel paddle shifter (2) and hold it in place.
  The transmission position display will show D.

ⓘ You can also activate or deactivate manual shifting permanently in the multimedia system.

Permanently activating or deactivating manual gearshifting

Multimedia system:

↳ ⌂ ▸▸ Settings ▸▸ Vehicle ▸▸ Driving

- Permanently switch the function on or off.

Gearshift recommendation

The gearshift recommendation assists you in adopting an economical driving style.



- When gearshift recommendation (1) appears on the driver's display, shift to the recommended gear.

Using kickdown

- **Maximum acceleration:** depress the accelerator pedal beyond the point of resistance.

To protect against engine overrev, the automatic transmission will shift up to the next gear when maximum engine speed has been reached.

Glide mode function

With an anticipatory driving style, Glide mode helps you to reduce fuel consumption.

Glide mode is characterized by the following:

- The combustion engine is switched off depending on the driving situation. All of the vehicle functions remain active.
- Transmission position display [D] is shown in green.

Glide mode is activated if the following conditions are met:

- Drive program [E] is selected.
- The speed is within a suitable range.
- The road's course is suitable, e.g. no steep uphill or downhill inclines or tight bends.
- The state of charge of the battery is sufficient.
- You do not depress the accelerator or brake pedal (except for light brake applications).

ⓘ Glide mode can also be activated if you have selected the "Eco" setting for the drive system in drive program [I].

Glide mode is deactivated again if one of the conditions is no longer met.

Glide mode can also be prevented by the following parameters:

- Incline
- Downhill gradient
- Temperature
- Height
- Speed
- Operating condition of the engine
- Road and traffic conditions

Function of the 4MATIC

4MATIC ensures that all four wheels are driven. Together with ESP® and 4ETS, 4MATIC improves the traction of your vehicle whenever a driven wheel spins due to insufficient traction.

If you fail to adapt your driving style, 4MATIC can neither reduce the risk of an accident nor override the laws of physics. 4MATIC cannot take account of road, weather and traffic conditions. 4MATIC is only an aid. You are responsible especially for maintaining a safe distance from the vehicle in front, for vehicle speed, for braking in good time and for staying in lane.

ⓘ In wintry driving conditions, the maximum effect of 4MATIC can only be achieved if you use winter tires (M+S tires), with snow chains if necessary.

Refueling

Refueling the vehicle

⚠ **WARNING** Risk of fire or explosion from fuel

Fuels are highly flammable.

- ▶ Fire, open flames, smoking and creating sparks must be avoided.
- ▶ Before refueling, switch off the vehicle and, if installed, the stationary heater, and leave them switched off during refueling.

WARNING Risk of injury from fuels

Fuels are poisonous and hazardous to your health.

- ▶ Do not swallow fuel or let it come into contact with skin, eyes or clothing.
- ▶ Do not inhale fuel vapor.
- ▶ Keep children away from fuel.
- ▶ Keep doors and windows closed during the refueling process.

If you or other people come into contact with fuel, observe the following:

- ▶ Immediately rinse fuel off your skin with soap and water.
- ▶ If fuel comes into contact with your eyes, immediately rinse them thoroughly with clean water. Seek medical attention immediately.
- ▶ If you swallow fuel, seek medical attention immediately. Do not induce vomiting.
- ▶ Change immediately out of clothing that has come into contact with fuel.

WARNING Risk of fire and explosion due to electrostatic charge

Electrostatic charge can ignite fuel vapor.

- ▶ Before you open the fuel filler cap or take hold of the pump nozzle, touch the metallic vehicle body.
- ▶ To avoid creating another electrostatic charge, do not get into the vehicle again during the refueling process.

NOTE Damage caused by the wrong fuel

Vehicles with a gasoline engine:

Even small amounts of the wrong fuel could result in damage to the fuel system, the engine and the emission control system.

- ▶ Refuel only with low-sulfur spark-ignition engine fuel.

This fuel may contain up to 10% ethanol. Your vehicle is suitable for use with E10 fuel.

Never refuel with one of the following fuels:

- Diesel
- Gasoline with more than 10% ethanol by volume, e. g. E15, E85, E100
- Gasoline with more than 3% methanol by volume, e.g. M15, M30, M85, M100
- Gasoline with metallic additives

If you have accidentally refueled with the wrong fuel:

- ▶ Do not switch on the vehicle.
- ▶ Consult a qualified specialist workshop.

NOTE Do not use diesel to refuel vehicles with a gasoline engine

If you have accidentally refueled with the wrong fuel:

- Do not switch on the vehicle. Otherwise fuel can enter the engine.

Even small amounts of the wrong fuel could result in damage to the fuel system and the engine. The repair costs are high.

- ▶ Consult a qualified specialist workshop.
- ▶ Have the fuel tank and fuel lines drained completely.

! **NOTE** Damage to the fuel system due to overfilling the fuel tank

- ▶ Only fill the fuel tank until the pump nozzle switches off.

If too much fuel has been added due, for example, to a faulty filling pump:

- ▶ Do not switch on the vehicle.
- ▶ Consult a qualified specialist workshop.

! **NOTE** Fuel may spray out when you remove the fuel pump nozzle

- ▶ Only fill the fuel tank until the pump nozzle switches off.

Requirements

- The vehicle is unlocked.

Observe the notes on operating fluids and fuel.

Only refuel with fuel that has at least the octane number specified on the information label in the fuel filler flap. Otherwise, engine output may be reduced and fuel consumption may increase.

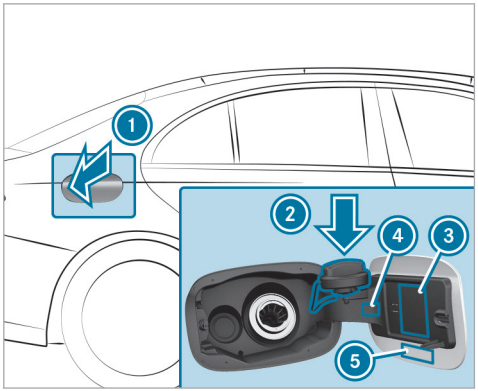

1. Fuel filler flap
2. Holder for fuel filler cap
3. Tire pressure table
4. QR code for rescue card
5. Fuel type

- ▶ Press on the center rear area of fuel filler flap 1.

- Turn the fuel filler cap counter-clockwise and remove it.
- Insert fuel filler cap from above into holder (2).
- Fully insert the pump nozzle into the tank filler neck, hook in place and refuel.
- Only fill the fuel tank until the pump nozzle switches off.
- Replace the cap for the tank and turn it clockwise until it engages audibly.
- Close fuel filler flap (1).

Parking

Parking the vehicle

WARNING Risk of accident and injury caused by an insufficiently secured vehicle rolling away

If the vehicle is not securely parked sufficiently, it can roll away in an uncontrolled way even at a slight downhill gradient.

- On uphill or downhill gradients, turn the front wheels so that the vehicle rolls towards the curb if it starts moving.
- Apply the parking brake.
- Switch the transmission to position P.

WARNING Risk of fire caused by hot exhaust system parts

Flammable materials such as leaves, grass or twigs may ignite.

- Park the vehicle so that no flammable material can come into contact with hot vehicle components.
- In particular, do not park on dry grassland or harvested grain fields.

WARNING Risk of accident and injury due to children left unattended in the vehicle

If you leave children unattended in the vehicle, they could, in particular:

- open doors, thereby endangering other persons or road users.
- get out and be struck by oncoming traffic.
- operate vehicle equipment and become trapped, for example.

In addition, the children could also set the vehicle in motion by, for example:

- releasing the parking brake.
- changing the gearbox position.
- starting the vehicle.

- Never leave children unattended in the vehicle.
- When leaving the vehicle, always take the key with you and lock the vehicle.
- Keep the key out of reach of children.

This also applies to the Digital Vehicle Key.

! **NOTE** Damage to the vehicle due to it rolling away

- Always secure the vehicle against rolling away.

! **NOTE** Damage caused by vehicle being lowered

Vehicles AIRMATIC: The vehicle can be lowered due to differences in temperature or extended non-operational times. This can cause damage to parts of the body.

- When stopping the vehicle and when driving off, make sure that there are no obstacles such as curbs under or in the immediate vicinity of the body.

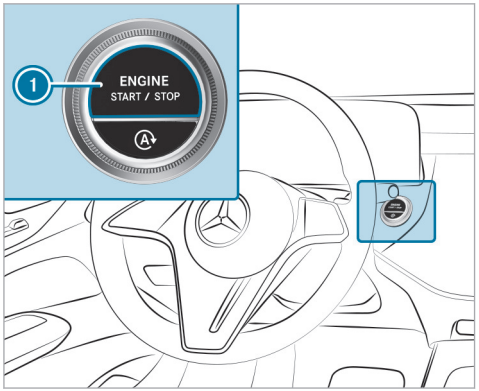

- Bring the vehicle to a standstill by depressing the brake pedal.
- On uphill or downhill gradients, turn the front wheels so that the vehicle rolls towards the curb if it starts moving.
- Apply the electric parking brake.
- Engage transmission position P in a stationary vehicle with the brake pedal applied (→ page 253).
- Switch off the vehicle by pressing button 1.
- Release the service brake slowly.
- Get out of the vehicle and lock it.

ⓘ When you park the vehicle, you can still operate the side windows and the panoramic sliding sunroof for approximately four minutes if the driver's door is closed.

Automatic vehicle shut-off when locking

Your vehicle is equipped with automatic engine shut-off.

When you leave the vehicle ready to drive, the vehicle will be turned off when locked under the following conditions:

- The ignition is switched on or the engine is running.
- Transmission position P is engaged.
- The driver's door is closed.
- **In addition, one of the following conditions must be fulfilled:**

- The vehicle is locked using the vehicle key.
- **Vehicles with KEYLESS-GO:** the vehicle is locked with KEYLESS-GO on the door handle of a closed door.
- **Vehicles with KEYLESS-GO:** the vehicle is locked via the locking button in the trunk lid.

ⓘ The engine will continue to run if the vehicle is not locked as described after it has been left. In this case, switch off the vehicle manually.

Automatic switch-off of the vehicle after a period of time (depending on equipment)

When the engine is running, the following display message appears in the driver's display when leaving the vehicle or after a certain time stopped in transmission position P : Vehicle Ready to Drive Shutdown Occurs When Locked or Automatically in XX Mins

The vehicle will then automatically switch off after a total of 20 minutes of time stopped.

ⓘ To avoid automatic switch-off after the time has elapsed, confirm the corresponding message in the central display of the multimedia system.

In the following cases, the engine continues to run:

- if the vehicle is not locked as described after leaving it
- if the automatic switch-off is not displayed by the display message
- if, once the time has elapsed, the automatic switch-off has been deactivated via the corresponding message in the central display

In this case, switch off the vehicle manually.

Garage door opener

Programming buttons for the garage door opener

⚠ **DANGER** Risk of death caused by exhaust gases

Combustion engines emit poisonous exhaust gases such as carbon monoxide. Inhaling these exhaust gases is hazardous to health and leads to poisoning.

▶ Never leave the engine or, if present, the auxiliary heating running in an enclosed space without sufficient ventilation.

⚠ **WARNING** Risk of injury by becoming trapped when opening and closing a garage door

When you operate or program a garage door with an integrated garage door opener, persons can become trapped or struck by the garage door if they stand within its range of movement.

▶ Always make sure that nobody is within the range of the garage door's movement.

Only operate the following doors using the garage door opener:

- Doors with a safety stop and reversing feature
- Doors which conform to the current U.S. safety standards

Before programming the garage door opener, park the vehicle outside the garage. Make sure that the vehicle is switched on but not started.

Requirements

- The vehicle has been parked outside the garage or outside the range of movement of the door.
- The vehicle is switched on.
- The vehicle has not been started.

ⓘ The garage door opener function is always available when the vehicle is switched on.

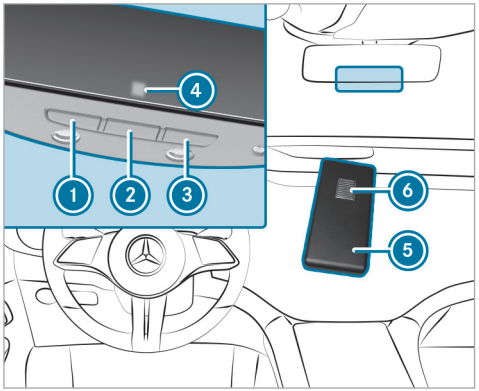

▶ Check if the transmitter frequency of the remote control has the frequency range of 280 to 868 MHz.

Radio equipment approval number:

- NZLMUAHL5 (USA)
- 4112A-MUAHL5 (Canada)

▶ Press and hold button 1, 2 or 3 that you wish to program.
Indicator lamp 4 flashes yellow.

ⓘ It can take up to 20 seconds before the indicator lamp flashes yellow.

▶ Release the previously pressed button.
Indicator lamp 4 continues to flash yellow.

▶ Point remote control 6 from a distance of 0.4 in (1 cm) to 3 in (8 cm) towards button 1, 2 or 3.

▶ Press and hold button 6 of remote control 5 until one of the following signals appears:

- Indicator lamp 4 lights up green continuously. Programming is complete.
- Indicator lamp 4 flashes green. Programming was successful. Additionally, synchronization of the rolling code with the door system must be carried out.

▶ If indicator lamp 4 does not light up or flash green: repeat the procedure.

▶ Release all of the buttons.

ⓘ The remote control for the door drive is not included in the scope of delivery of the garage door opener.

Synchronizing the rolling code

⚠ DANGER Risk of death caused by exhaust gases

Combustion engines emit poisonous exhaust gases such as carbon monoxide. Inhaling these exhaust gases is hazardous to health and leads to poisoning.

- ▶ Never leave the engine or, if present, the auxiliary heating running in an enclosed space without sufficient ventilation.

⚠ WARNING Risk of injury by becoming trapped when opening and closing a garage door

When you operate or program a garage door with an integrated garage door opener, persons can become trapped or struck by the garage door if they stand within its range of movement.

- ▶ Always make sure that nobody is within the range of the garage door's movement.

Only operate the following doors using the garage door opener:

- Doors with a safety stop and reversing feature
- Doors which conform to the current U.S. safety standards

Before programming the garage door opener, park the vehicle outside the garage. Make sure that the vehicle is switched on but not started.

Requirements

- The door system uses a rolling code.
- The vehicle must be within range of the garage door or door drive.
- The vehicle as well as persons and objects are located outside the range of movement of the door.

ⓘ The garage door opener function is always available when the vehicle is switched on.

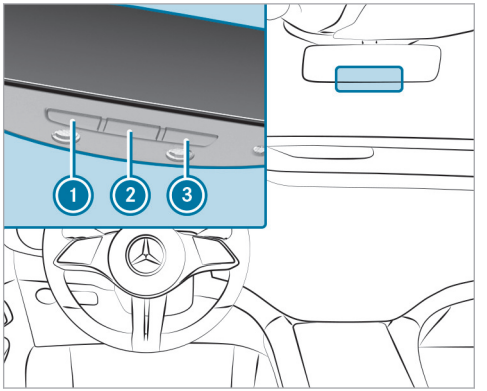

- ▶ Press the program button on the door drive unit.
  Initiate the next step within approximately 30 seconds.
- ▶ Press previously programmed button 1, 2 or 3 repeatedly until the door closes.
  When the door closes, programming is completed.

ⓘ Please also read the operating instructions for the door drive.

Troubleshooting when programming the remote control

⚠ **DANGER** Risk of death caused by exhaust gases

Combustion engines emit poisonous exhaust gases such as carbon monoxide. Inhaling these exhaust gases is hazardous to health and leads to poisoning.

- ▶ Never leave the engine or, if present, the auxiliary heating running in an enclosed space without sufficient ventilation.

⚠ **WARNING** Risk of injury by becoming trapped when opening and closing a garage door

When you operate or program a garage door with an integrated garage door opener, persons can become trapped or struck by the garage door if they stand within its range of movement.

- ▶ Always make sure that nobody is within the range of the garage door's movement.

Operate only the following doors using the garage door opener:

- Doors with a safety stop and reversing function
- Doors which conform to the current U.S. safety standards

Before programming the garage door opener, park the vehicle outside the garage. Make sure that the vehicle is switched on but not started.

ⓘ The garage door opener function is always available when the vehicle is switched on.

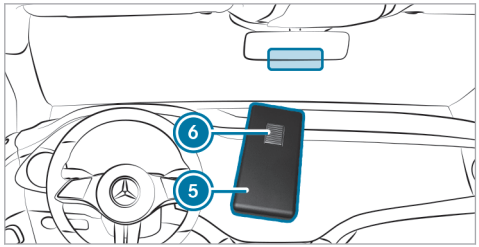

- ▶ Check if the transmitter frequency of remote control 5 is supported.
- ▶ Replace the batteries in remote control 5.
- ▶ Hold remote control 5 at various angles from a distance of 0.4 in (1 cm) to 3 in (8 cm) front of the inside rearview mirror. You should test every position for at least 25 seconds before trying another position.
- ▶ Hold remote control 5 at the same angles at various distances in front of the inside rearview mirror. You should test every position for at least 25 seconds before trying another position.

- On remote controls that transmit only for a limited period, press button (6) on remote control (5) again before transmission ends.
- Angle the antenna line of the garage door opener unit toward the remote control.

ⓘ It is possible that older garage doors cannot be operated using the remote control in the inside rearview mirror even after you have successfully performed the measures described above. If this is the case, contact the HomeLink® Hotline.

ⓘ Support and additional information on programming:

- on the toll free HomeLink® Hotline on 1-800-355-3515
- on the Internet at https://www.homelink.com/mercedes

Opening or closing the garage door

DANGER Risk of death caused by exhaust gases

Combustion engines emit poisonous exhaust gases such as carbon monoxide. Inhaling these exhaust gases is hazardous to health and leads to poisoning.

- Never leave the engine or, if present, the auxiliary heating running in an enclosed space without sufficient ventilation.

WARNING Risk of injury by becoming trapped when opening and closing a garage door

When you operate or program a garage door with an integrated garage door opener, persons can become trapped or struck by the garage door if they stand within its range of movement.

- Always make sure that nobody is within the range of the garage door's movement.

Only operate the following doors using the garage door opener:

- Doors with a safety stop and reversing feature
- Doors which conform to the current U.S. safety standards

Before programming the garage door opener, park the vehicle outside the garage. Make sure that the vehicle is switched on but not started.

Requirements

- The corresponding button is programmed to operate the door.

ⓘ The garage door opener function is always available when the vehicle is switched on.

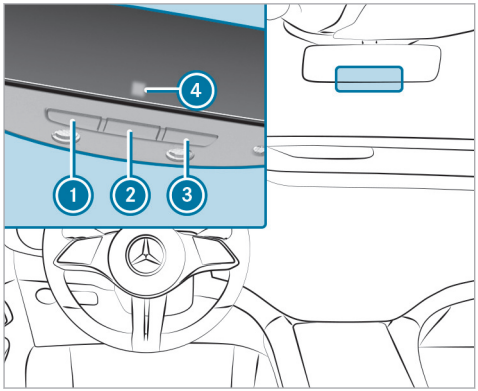

- Press and hold buttons (1), (2) or (3) until the door opens or closes.
- If the indicator lamp (4) flashes yellow after approx. 20 seconds: Press the previously pressed button again and keep it pressed until the door opens or closes.

Clearing the garage door opener memory

DANGER Risk of death caused by exhaust gases

Combustion engines emit poisonous exhaust gases such as carbon monoxide. Inhaling these exhaust gases is hazardous to health and leads to poisoning.

- Never leave the engine or, if present, the auxiliary heating running in an enclosed space without sufficient ventilation.

WARNING Risk of injury by becoming trapped when opening and closing a garage door

When you operate or program a garage door with an integrated garage door opener, persons can become trapped or struck by the garage door if they stand within its range of movement.

- Always make sure that nobody is within the range of the garage door's movement.

Only operate the following doors using the garage door opener:

- Doors with a safety stop and reversing feature
- Doors which conform to the current U.S. safety standards

Before programming the garage door opener, park the vehicle outside the garage. Make sure that the vehicle is switched on but not started.

ⓘ The garage door opener function is always available when the vehicle is switched on.

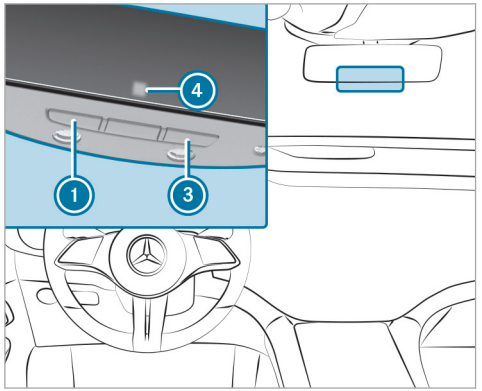

- Press and hold buttons (1) and (3). Indicator lamp (4) lights up yellow.
- If indicator lamp (4) flashes green: release buttons (1) and (3). The entire memory has been deleted.

Electric parking brake

Function of the electric parking brake (applying automatically)

WARNING Risk of accident and injury due to children left unattended in the vehicle

If you leave children unattended in the vehicle, they could, in particular:

- open doors, thereby endangering other persons or road users.
- get out and be struck by oncoming traffic.
- operate vehicle equipment and become trapped, for example.

In addition, the children could also set the vehicle in motion by, for example:

- releasing the parking brake.
- changing the gearbox position.
- starting the vehicle.

- Never leave children unattended in the vehicle.
- When leaving the vehicle, always take the key with you and lock the vehicle.
- Keep the key out of reach of children.

This also applies to the Digital Vehicle Key.

The electric parking brake is applied if the transmission is in position P and one of the following conditions is fulfilled:

- The vehicle is switched off.
- The seat belt tongue is not inserted in the seat belt buckle of the driver's seat and the driver's door is opened.

To prevent application: pull the handle of the electric parking brake (→ page 269).

In the following situations, the electric parking brake is also applied:

- The HOLD function is keeping the vehicle stationary.
- Active Parking Assist is keeping the vehicle stationary.
- Active Distance Assist DISTRONIC is bringing the vehicle to a standstill.

- **In addition, one of the following conditions must be fulfilled:**
  - The vehicle is switched off.
  - The seat belt tongue is not inserted in the seat belt buckle of the driver's seat and the driver's door is opened.
  - There is a system malfunction.
  - The power supply is insufficient.
  - The vehicle is stationary for a lengthy period.

When the electric parking brake is applied, the red PARK (USA) or (P) (Canada) indicator lamp lights up in the driver's display.

ⓘ The electric parking brake is not automatically applied if the vehicle is switched off by the ECO start/stop function.

Function of the electric parking brake (releasing automatically)

The electric parking brake is released when the following conditions are fulfilled:

- The driver's door is closed.
- The vehicle has been started.
- The transmission is in position D or R and you depress the accelerator pedal or you shift from transmission position P to D or R when on level ground.
- If the transmission is in position R, the trunk lid must be closed.
- The seat belt tongue is inserted into the seat belt buckle of the driver's seat.

  If the seat belt tongue is not inserted into the seat belt buckle of the driver's seat, one of the following conditions must be fulfilled:
  - You shift from transmission position P.

    or
  - You have previously driven at speeds greater than 2 mph (3 km/h).

When the electric parking brake is released, the red PARK (USA) or (P) (Canada) indicator lamp in the driver's display goes out.

Applying/releasing the electric parking brake manually

⚠ **WARNING** Risk of accident and injury due to children left unattended in the vehicle

If you leave children unattended in the vehicle, they could, in particular:

- open doors, thereby endangering other persons or road users.
- get out and be struck by oncoming traffic.
- operate vehicle equipment and become trapped, for example.

In addition, the children could also set the vehicle in motion by, for example:

- releasing the parking brake.
- changing the gearbox position.
- starting the vehicle.

▶ Never leave children unattended in the vehicle.

▶ When leaving the vehicle, always take the key with you and lock the vehicle.

▶ Keep the key out of reach of children.

This also applies to the Digital Vehicle Key.

Applying

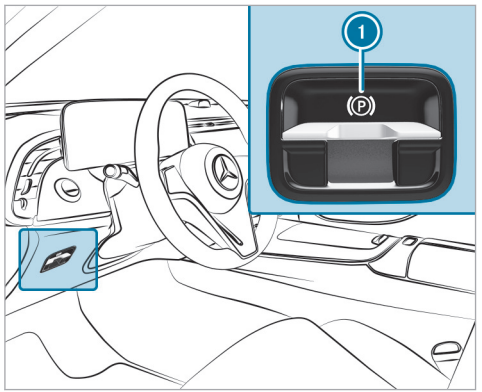

▶ Push handle 1.
The red PARK (USA) or Ⓟ (Canada) indicator lamp lights up in the driver's display.

ⓘ The electric parking brake is only securely applied if the red PARK (USA) or Ⓟ (Canada) indicator lamp is lit continuously.

Releasing

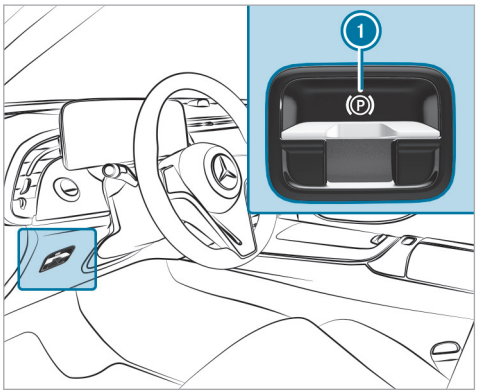

▶ Switch on the vehicle.

▶ Pull handle 1.
The red PARK (USA) or Ⓟ (Canada) indicator lamp in the driver's display goes out.

Emergency braking

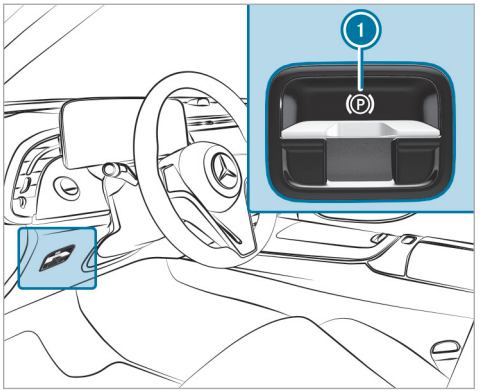

▶ Press and hold handle 1.
As long as the vehicle is in motion, the Release Parking Brake message is displayed and the red PARK (USA) or Ⓟ (Canada) indicator lamp flashes.

When the vehicle has been braked to a standstill, the electric parking brake is applied. The

red PARK (USA) or Ⓟ (Canada) indicator lamp lights up in the driver's display.

Information on collision detection on a parked vehicle

If a collision is detected on the locked vehicle when the tow-away alarm is activated and collision detection is switched on, you will receive a message in the multimedia system when the vehicle is switched on.

You will receive information about the following points:

- The area of the vehicle that may have been damaged.
- The force of the impact.

The following situation can lead to inadvertent activation:

- The parked vehicle is moved, for example, in a two-story garage.

ⓘ Deactivate the tow-away alarm in order to prevent inadvertent activation. If you deactivate the tow-away alarm, collision detection will also be deactivated.
You can permanently deactivate collision detection via the multimedia system (→ page 271).

ⓘ If the battery is severely discharged, the function for detecting a collision on a parked vehicle is automatically deactivated to facilitate the next engine start.

System limits

Detection may be restricted in the following situations:

- the vehicle is damaged without impact, for example, if an outside mirror is torn off or the paint is damaged by a key
- an impact occurs at low speed
- the electric parking brake is not applied

ⓘ You are responsible for your vehicle. Convince yourself that your vehicle is free of damage and roadworthy.

Setting collision detection on a parked vehicle

Multimedia system:

↳ ⌂ ▸▸ Settings ▸▸ Vehicle ▸▸ Open/Close ▸▸ Vehicle Protection

▶ Activate or deactivate the function via Collision Notification.

ⓘ A maximum of three incidents can be registered. Up to 15 photos will be taken for every incident. In the event of another incident, the photos of the first incident will be overwritten if they have not been deleted already.

Activating/deactivating the collision photos function

Note possible legal restrictions in some countries regarding automatic recording of the vehicle's surroundings.

▶ Activate or deactivate Collision Photos.

Transferring the collision photos with the Mercedes me app

▶ Select Upload Collision Photos.

▶ Select Upload Automatically.

- Scan the generated QR code on the central display with the Mercedes me app.
  The encrypted collision photos will then be uploaded to Mercedes me.

ⓘ Any device that can scan QR codes can be used to view the collision photos in the Mercedes me app.

Copying the collision photos to a USB flash drive

- Connect a USB flash drive (→ page 488).
- Select Manage Collision Photos.
- Select Copy (USB).
  All collision photos will be copied to the USB flash drive.

ⓘ To ensure secure operation, use only with FAT32- or exFAT-formatted USB storage devices.

Deleting collision photos

- Select Manage Collision Photos.
- Select Delete.
  All collision photos will be deleted.

Notes on parking the vehicle for an extended period

If you leave the vehicle parked for longer than six weeks, it may suffer damage through disuse.

The 12 V battery may also be impaired or damaged by heavy discharging.

ⓘ Further information can be obtained at a qualified specialist workshop.

Driving and driving safety systems

Driving systems and your responsibility

Your vehicle is equipped with driving systems that assist you in driving, parking and maneuvering the vehicle. The driving systems are only aids. They are not a substitute for you paying attention to your surroundings and do not relieve you of your responsibility pertaining to road traffic law. The driver is always responsible for maintaining a safe distance to the vehicle in front, for vehicle speed, for braking in good time and for staying in lane. Pay attention to the traffic conditions at all times and intervene when necessary. Be aware of the limitations regarding the safe use of these systems.

Driving systems can neither reduce the risk of an accident if you fail to adapt your driving style nor override the laws of physics. They cannot always take into account road, weather or traffic conditions.

ⓘ Some driving systems can regulate or limit the speed to a previously set value. Draw attention to the stored speed when changing drivers.

Information on vehicle sensors and cameras

Some driving and driving safety systems use cameras as well as radar or ultrasonic sensors to monitor the area in front of, behind or next to the vehicle.

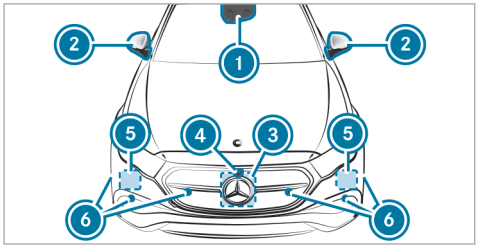

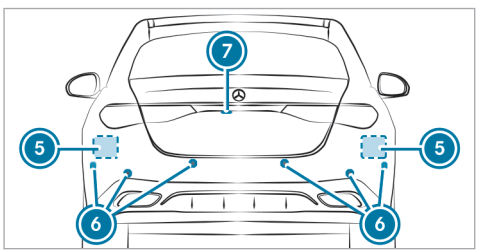

1. Multifunction camera
2. Cameras in the outside mirrors
3. Front radar
4. Front camera
5. Corner radars
6. Ultrasonic sensors
7. Rear-view camera

WARNING Risk of accident due to restricted detection performance of vehicle sensors and cameras

If the area around vehicle sensors or cameras is covered, damaged or dirty, certain driving and safety systems cannot function correctly. There is a risk of an accident.

- Keep the area around vehicle sensors or cameras clear of any obstructions and clean.
- Have damage to the bumper, radiator grille or stone chipping in the area of the front and rear windows repaired at a qualified specialist workshop.

Particularly, keep the areas around the sensors and cameras free of dirt, ice or slush (→ page 516). The sensors and cameras must not be covered and the detection ranges around them must be kept free. Do not attach additional license plate bracket, advertisements, stickers, foils or foils to protect against stone chippings in the detection range of the sensors and cameras. Make sure that there are no overhanging loads protruding into the detection range.

If there is damage to a bumper or the radiator grill, or after an impact, have the function of the sensors checked at a qualified specialist workshop. Have damage or stone chipping in the area of the cameras on the front and rear windows repaired at a qualified specialist workshop.

ⓘ The rear-view camera can extend and retract automatically for the purpose of calibration, even though there is no camera image in the display.

Overview of driving systems and driving safety systems

- ABS (→ page 274)
- BAS (→ page 275)
- ESP® (→ page 275)
- ESP® Crosswind Assist (→ page 276)
- EBD (→ page 276)

- STEER CONTROL (→ page 276)
- HOLD function (→ page 277)
- Hill Start Assist (→ page 278)
- Valet Service Mode (→ page 278)
- Beginner Driver Mode (→ page 279)
- ATTENTION ASSIST (→ page 280)
- Cruise control (→ page 282)
- Traffic Sign Assist (→ page 306)
- Traffic light view (→ page 310)
- AIRMATIC (→ page 317)

Driving Assistance Package

ⓘ The availability of some functions or sub-functions of the Driving Assistance Package is equipment- or country-specific. The range of functions in your Driving Assistance Package may differ from the functions listed here. The functions Active Distance Assist DISTRONIC, Active Blind Spot Assist, Active Brake Assist, Active Lane Keeping Assist and Active Emergency Stop Assist are also available without the Driving Assistance Package, albeit with restricted functionality.

- Active Distance Assist DISTRONIC (→ page 284)
- Active Speed Limit Assist (→ page 290)
- Route-based speed adaptation (→ page 290)
- Active Brake Assist (→ page 300)
- Active Steering Assist (→ page 293)
- Active Emergency Stop Assist (→ page 295)
- Active Lane Change Assist (→ page 296)
- Active Stop-and-Go Assist (→ page 292)
- Active Blind Spot Assist with exit warning (→ page 311)
- Active Lane Keeping Assist (→ page 314)
- PRE-SAFE® Impulse Side (→ page 104)

Parking Package

ⓘ The availability of individual functions is country- and equipment-dependent.

- Rear-view camera (→ page 319)
- 360° camera (→ page 321)
- Parking Assist PARKTRONIC (→ page 325)
- Active Parking Assist (→ page 329)
- Remote Parking Assist (→ page 335)
- Memory Parking Assist (country-dependent) (→ page 343)

Function of ABS

The Anti-lock Brake System (ABS) regulates the brake pressure in critical driving situations:

- During braking, for instance, at maximum full-stop braking or if there is insufficient tire traction, the wheels are prevented from locking.
- Vehicle steerability while braking is ensured.

If ABS intervenes when braking, you will feel a pulsing in the brake pedal. The pulsating brake pedal can be an indication of hazardous road conditions and can serve as a reminder to take extra care while driving.

System limits

- ABS is active from speeds of approx. 3 mph (5 km/h).
- ABS may be impaired or may not function if a malfunction has occurred and the yellow 

ABS warning lamp lights up continuously after the vehicle is started.

Function of BAS

WARNING Risk of an accident caused by a malfunction in BAS (Brake Assist System)

If BAS is malfunctioning, the braking distance in an emergency braking situation is increased.

- Depress the brake pedal with full force in emergency braking situations. ABS prevents the wheels from locking.

The Brake Assist System (BAS) supports your emergency braking situation with additional brake force.

If you depress the brake pedal quickly, BAS is activated:

- BAS automatically boosts the brake pressure.
- BAS can shorten the braking distance.
- ABS prevents the wheels from locking.

The brakes will function as usual once you release the brake pedal. BAS is deactivated.

Function of ESP®

WARNING Risk of skidding if ESP® is deactivated

If you deactivate ESP®, ESP® cannot carry out vehicle stabilization.

- ESP® should only be deactivated in the following situations.

The Electronic Stability Program (ESP®) can monitor and improve driving stability and traction in the following situations within physical limits:

- When you pull away on wet or slippery roads.
- When you brake.

If the vehicle deviates from the direction desired by the driver, ESP® can stabilize the vehicle by intervening in the following ways:

- Applying the brakes to one or more wheels.
- Adapting the engine output according to the situation.

When ESP® is deactivated, the OFF warning lamp will light up continuously:

- Driving stability will no longer be improved.
- The drive wheels could spin.
- ETS/4ETS traction control will still be active.

ⓘ When ESP® is deactivated, you will still be assisted by ESP® when braking.

When the warning lamp flashes, at least one wheel has reached its grip limit:

- Adapt your driving style to suit the current road and weather conditions.
- Do not deactivate ESP®.
- Depress the accelerator pedal only as far as is necessary when pulling away.

Deactivate ESP® in the following situations to improve traction:

- When using snow chains.
- In deep snow.

- On sand or gravel.

ⓘ Spinning the wheels will cause them to dig in to the surface, thereby enhancing traction.

If the warning lamp lights up continuously, ESP® is not available due to a malfunction.

Observe the following information:

- Warning and indicator lamps (→ page 778)
- Display messages (→ page 700)

ETS/4ETS

ETS/4ETS (Electronic Traction System) traction control is part of ESP® and makes it possible to pull away and accelerate on a slippery roads.

ETS/4ETS can improve the vehicle's traction by intervening in the following ways:

- The brakes will be applied to the drive wheels individually if they spin.
- More drive torque will be transferred to the wheel or wheels with traction.

Influence of drive programs on ESP®

The drive programs enable ESP® to adapt to different weather and road conditions as well as the driver's preferred driving style. Depending on the selected drive program, the appropriate ESP® mode will be activated (→ page 249).

Function of ESP® Crosswind Assist

ESP® Crosswind Assist detects sudden gusts of side wind and helps the driver to keep the vehicle in the lane:

- ESP® Crosswind Assist is active at vehicle speeds between approx. 50 mph (80 km/h) and 125 mph (200 km/h) when driving straight ahead or cornering slightly.
- The vehicle is stabilized by means of individual brake application on one side.

Activating/deactivating ESP® (Electronic Stability Program)

Multimedia system:

▶ Select ESP.

▶ Select On or Off.

ESP® is deactivated if the ESP® OFF warning lamp lights up continuously on the driver's display.

Observe any information on warning lamps and display messages which may be shown on the driver's display.

Function of EBD

Electronic Brakeforce Distribution (EBD) is characterized by the following:

- Monitoring and regulating the brake pressure on the rear wheels.
- Improved driving stability when braking, especially on bends.

Function of STEER CONTROL

STEER CONTROL assists you by transmitting a noticeable steering force to the steering wheel in the direction required for vehicle stabilization.

This steering recommendation is given in the following situations:

- both right wheels or both left wheels are on a wet or slippery road surface when you brake
- the vehicle starts to skid

System limits

STEER CONTROL may be impaired or may not function in the following situations:

- ESP® is deactivated.
- ESP® is malfunctioning.
- The steering is malfunctioning.

If ESP® is malfunctioning, you will be assisted further by the power steering.

HOLD function

HOLD function

The HOLD function holds the vehicle at a standstill without requiring you to depress the brake pedal, e.g. while waiting in traffic.

The HOLD function is only an aid. The responsibility for the vehicle safely standing still remains with the driver.

System limits

The HOLD function is only intended to provide assistance when driving and is not a sufficient means of safeguarding the vehicle against rolling away when stationary.

- The incline must not be greater than 30%.

Activating/deactivating the HOLD function

⚠ **WARNING** Risk of an accident due to the HOLD function being active when you leave the vehicle

If the vehicle is only braked with the HOLD function it could, in the following situations, roll away:

- If there is a malfunction in the system or in the power supply.
- If the HOLD function is deactivated by depressing the accelerator pedal or brake pedal, e.g. by a vehicle occupant.

▶ Always secure the vehicle against rolling away before you leave it.

Requirements

- The vehicle is stationary.
- The driver's door is closed or the seat belt on the driver's side is fastened.
- The vehicle has been started or has been automatically switched off by the ECO start/stop function.
- The electric parking brake is released.
- Active Distance Assist DISTRONIC is deactivated.
- The transmission is in position D, R or N.

Activating the HOLD function

▶ Depress the brake pedal, and after a short time quickly depress further until the HOLD display appears in the driver's display.

▶ Release the brake pedal.

Deactivating the HOLD function

▶ Depress the accelerator pedal to pull away.

or

- Depress the brake pedal until the HOLD display disappears from the driver's display.

The HOLD function is deactivated in the following situations:

- Active Distance Assist DISTRONIC is activated.
- The transmission is shifted to position P.
- The vehicle is secured with the electric parking brake.

In the following situations, the vehicle is held by transmission position P and/or by the electric parking brake:

- The seat belt is unfastened and the driver's door is opened.
- The vehicle is switched off.
- There is a system malfunction.
- The power supply is insufficient.

In addition, the Brake Immediately message may appear in the driver's display and a horn tone may sound at regular intervals.

- Immediately depress the brake pedal firmly until the warning message disappears. The HOLD function is deactivated.
- Additionally secure the vehicle against rolling away.

Function of Hill Start Assist

WARNING Risk of accident and injury due to the vehicle rolling away

After a short time, Hill Start Assist no longer holds the vehicle.

- Swiftly move your foot from the brake pedal to the accelerator pedal. Do not leave the vehicle when it is being held by Hill Start Assist.

Hill Start Assist will hold the vehicle for a short time when you pull away on a hill in the following circumstances:

- The transmission is in position D or R.
- The electric parking brake is released.

This will give you enough time to move your foot from the brake pedal to the accelerator pedal and depress it before the vehicle begins to roll away.

Valet service mode

Function of the valet service mode

ⓘ This function is an on-demand feature (→ page 81).

In valet service mode, the vehicle acceleration is limited to reduce the risk of damage to and improper use of the vehicle when it is handed over to third parties.

Valet service mode is characterized by the following:

- Power output is reduced.
- In principle, a maximum speed of 81 mph (130 km/h) can be reached.
- The sporty drive programs and the I drive program are not available.
- ESP® cannot be deactivated.
- Profiles that are still logged in are logged out and unprotected profiles are secured.

Activating or deactivating Valet Service Mode

Requirements

- For activation: the vehicle is stationary.
- For deactivation: park position P is engaged.

Multimedia system:

→ ⌂ ▸▸ Apps ▸▸ Valet Service Mode

ⓘ This function is an on-demand feature (→ page 81).

▶ Activate or deactivate the function.
If Valet Service Mode is activated, an indicator lamp on the driver's display will light up.

ⓘ Alternatively, Valet Service Mode can be activated or deactivated via the Mercedes me connect app.
Further information on Mercedes me connect (→ page 472)

ⓘ Valet Service Mode is protected from deactivation by third parties only in conjunction with Mercedes me connect. If the vehicle is connected to Mercedes me connect, only the profile that activated the mode or the established main user can deactivate it again.

ⓘ Valet Service Mode will remain active even following a change of profile or after the vehicle is switched on or off, and must be deliberately deactivated by the authorized users.

Beginner driver mode

Function of the beginner driver mode

ⓘ This function is an on-demand feature (→ page 81).

In beginner driver mode, the vehicle acceleration is limited to increase safety for inexperienced drivers.

Beginner driver mode is characterized by the following:

- Power output is reduced.
- In principle, a maximum speed of 81 mph (130 km/h) can be reached.
- The sporty drive programs and the drive program are not available.
- ESP® cannot be deactivated.

Activating/deactivating Beginner Driver Mode

Requirements

- For activation: the vehicle is stationary.
- For deactivation: park position P is engaged.

Multimedia system:

→ ⌂ ▸▸ Apps ▸▸ Beginner Driver Mode

ⓘ This function is an on-demand feature (→ page 81).

▶ Activate or deactivate the function.
If Beginner Driver Mode is activated, an indicator lamp on the driver's display will light up.

ⓘ Alternatively, Beginner Driver Mode can be activated or deactivated via the Mercedes me connect app.
Further information on Mercedes me connect (→ page 472)

ⓘ Beginner Driver Mode is protected from deactivation by third parties only in conjunction with Mercedes me connect. If the vehicle is connected to Mercedes me connect, only the profile that activated the mode or the established main user can deactivate it again.

ⓘ Beginner Driver Mode will remain active even following a change of profile or after the vehicle is switched on or off, and must be deliberately deactivated by the authorized user.

ATTENTION ASSIST

Function of ATTENTION ASSIST

ⓘ Depending on the country and equipment, ATTENTION ASSIST offers microsleep detection and distraction detection sub-functions. These functions are available only in conjunction with the driver camera on the driver's display (→ page 394).

ATTENTION ASSIST assists you on long, monotonous journeys (e.g. on highways and trunk roads). If indicators of fatigue or increasing lapses in concentration on the part of the driver are detected, the system will suggest taking a break.

ATTENTION ASSIST is only an aid. It cannot always detect fatigue or lapses in concentration in time. The system is not a substitute for a well-rested and attentive driver. On long journeys, take regular breaks in good time that allow for adequate recuperation.

You can choose between two settings:

- **Standard:** normal system sensitivity.
- **Sensitive:** higher system sensitivity. The driver will be warned earlier and the attention level detected by ATTENTION ASSIST will be adapted accordingly.

If fatigue or increasing inattention is detected, the following warning will appear on the driver's display: ATTENTION ASSIST: Take a Break!. You can acknowledge the message and take a break if necessary. If you do not take a break and ATTENTION ASSIST continues to detect increasing lapses in concentration, you will be warned again after a minimum of 15 minutes.

If ATTENTION ASSIST is unable to calculate the attention level and cannot issue a warning, the System Suspended message will appear.

If the driver's display shows a warning, a rest area search will be offered in the multimedia system. You can select a rest area and start navigation to this rest area.

When you restart the vehicle, ATTENTION ASSIST will be switched on automatically. The last selected sensitivity level will remain stored.



The following information will be shown on the driver's display:

- The length of the journey since the last break
- The attention level determined by ATTENTION ASSIST:
  - The more segments ② of the circle displayed, the higher the attention level detected.

- Fewer segments (2) will be displayed in the circle as your attention level decreases.

- The status of microsleep and distraction detection (1):
  - **Grey:** activated but not operational
  - **Green:** activated and operational
  - **Deactivated:** display will be hidden

Microsleep detection

If the system, which uses the driver camera, detects indicators of microsleep, the ATTENTION ASSIST Nodding Off Take a Break! warning message will appear on the driver's display and a warning tone will sound simultaneously. This warning message must be confirmed by Touch Control. It is recommended that you take a break immediately.

If the driver does not react to the microsleep warning, an emergency stop may be initiated by the system (→ page 295).

Distraction detection

ATTENTION ASSIST can use the driver camera to detect when the driver is distracted and not looking at the road.

If the system detects driver distraction, a white message reading ATTENTION ASSIST Stay Alert! will appear after a few seconds and a warning tone will sound. If the driver does not resume looking at the road, the message will be displayed in yellow and a continuous warning tone will sound.

If the driver still does not react to the warning, an emergency stop may be initiated by the system (→ page 295).

System limits

ATTENTION ASSIST is active in the 37 mph (60 km/h) to 124 mph (200 km/h) speed range.

The microsleep detection function is available at speeds of 12 mph (20 km/h) and above.

If the system is not available due to a fault, the ATTENTION ASSIST warning light will light up permanently on the driver's display

ATTENTION ASSIST will function only to a limited extent and warnings may be delayed or not occur in the following situations in particular:

- If you have been driving for less than approximately 30 minutes.
- If the road condition is poor (uneven road surface or potholes).
- If there is a strong side wind.
- If you adopt a sporty driving style (high cornering speeds or high rates of acceleration).
- If the Steering Assist function of Active Distance Assist DISTRONIC is active.
- If the clock is set to the incorrect time.
- If you change lanes and vary your speed frequently in active driving situations.

In addition, microsleep and distraction detection will not function when the driver camera cannot detect your eyes; for example, as a result of the following factors:

- Your eyes are obscured (e.g. due to the steering column position)
- Poor ambient light

- Some types of eyeglasses and sunglasses
- Your line of vision is outside the driver camera's field of vision

Also observe any information regarding display messages that may be shown on the driver's display.

The ATTENTION ASSIST drowsiness or alertness assessment will be reset and restarted when you continue your journey in the following situations:

- If you switch off the vehicle.
- If you unfasten your seat belt and open the driver's door (e.g. to change drivers or take a break).

Setting ATTENTION ASSIST

Multimedia system:

→ ⌂ ▸▸ Settings ▸▸ Assistance ▸▸ Assistance ▸▸ ATTENTION ASSIST

Setting the sensitivity

▶ Select ⚙ next to ATTENTION ASSIST.

▶ Select Standard or Sensitive.

Speed control cruise control

Function of cruise control

Cruise control regulates the speed to the value selected by the driver.

If you accelerate to overtake, for example, the stored speed is not deleted. If you remove your foot from the accelerator pedal after overtaking, cruise control will resume speed regulation back to the stored speed.

You can store any speed from 15 mph (20 km/h) up to the maximum design speed.

Observe the notes on driving systems and your responsibility; you may otherwise fail to recognize dangers (→ page 272).

Displays on the driver's display

⏲ **Gray:** cruise control is selected but not yet active, or temporarily passive.

⏲ **Green:** cruise control is active.

A stored speed is shown under the ⏲ display and is indicated in the speedometer.

System limits

Cruise control may be unable to maintain the stored speed on uphill gradients. The stored speed is resumed when the gradient evens out.

Change to a lower gear in good time for long and steep downhill gradients. Take particular note of this when driving a laden vehicle. By doing so, you will make use of the braking effect of the engine. This relieves the load on the brake system and prevents the brakes from overheating and wearing too quickly.

Do not use cruise control in the following situations:

- In traffic situations which require frequent changes of speed, e.g. in heavy traffic, on winding roads
- On slippery roads. Accelerating can cause the drive wheels to lose traction and the vehicle could then skid.
- When visibility is poor

Operating cruise control

WARNING Risk of accident due to stored speed

If you call up the stored speed and this is lower than your current speed, the vehicle decelerates.

- Take into account the traffic situation before calling up the stored speed.

Requirements

- Cruise control is selected.
- ESP® must be activated, but not intervening.
- The vehicle speed is at least 15 mph (20 km/h).
- The transmission is in position D.

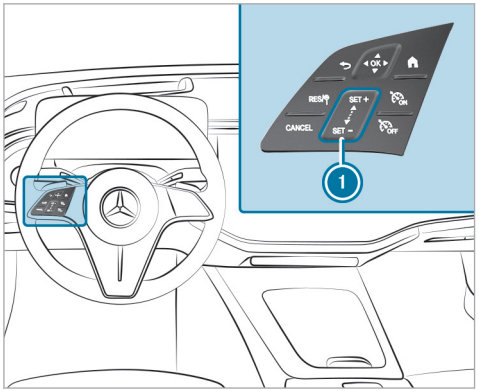

Steering wheel control panel for cruise control

RES	Adopts the stored/detected speed
CANCEL	Deactivates cruise control
1 SET + SET -	Control panel for increasing/decreasing speed
ON	Activates cruise control
OFF	Deactivates cruise control

Activating cruise control

F214 0032 13

- Press ON.

Activating cruise control

- Press SET + or SET - on control panel 1. The current speed will be stored and maintained by the vehicle.

or

- Press RES. The last stored speed will be called up and maintained by the vehicle.

  If the last stored speed has previously been deleted, the current vehicle speed will be stored.

ⓘ When you switch off the vehicle, the last speed stored will be deleted.

Increasing/decreasing the stored speed

- To increase the stored speed: swipe upwards from the bottom of control panel 1.
  - The stored speed will be increased by 1 mph (1 km/h).

▶ To decrease the stored speed: swipe downwards from the top of control panel (1).
- The stored speed will be decreased by 1 mph (1 km/h).

or

▶ Briefly press SET + or SET - on control panel (1).

The stored speed will be increased or decreased to the following values depending on the unit:
- **mph:** the next value ending in 5
- **km/h:** the next value ending in 0

or

▶ Accelerate the vehicle to the desired speed.

▶ Press SET + on control panel (1).

Adopting a detected speed

If cruise control is activated and Traffic Sign Assist has detected a traffic sign with a maximum permissible speed and this is displayed on the driver's display:

▶ Press RES.

The maximum permissible speed shown by the traffic sign will be stored and the vehicle will maintain that speed.

Deactivating cruise control

▶ Press CANCEL.

Deactivating cruise control

▶ Press OFF.

ⓘ If you brake or deactivate ESP® or if ESP® intervenes, cruise control will be deactivated.

Active Distance Assist DISTRONIC

Function of Active Distance Assist DISTRONIC

ⓘ Active Distance Assist DISTRONIC as described for vehicles without the Driving Assistance package is an on-demand feature (country-dependent) (→ page 81).

Active Distance Assist DISTRONIC maintains the set speed on free-flowing roads. If vehicles are detected ahead, the set distance is maintained, if necessary until the vehicle comes to a standstill.

The vehicle accelerates or brakes depending on the distance to the vehicle in front and the set speed. The speed and distance to the vehicle in front are set and saved using the steering wheel.

Available speed range:
- **Vehicles without Driving Assistance Package:** 15 mph (20 km/h) - 100 mph (160 km/h)
- **Vehicles with Driving Assistance Package:** 15 mph (20 km/h) - 130 mph (210 km/h)

Other features of Active Distance Assist DISTRONIC:
- Adjusts the driving style depending on the selected drive program (energy-saving, comfortable or dynamic) (→ page 248)
- Initiates acceleration to the stored speed if the turn signal indicator is switched on to change to the overtaking lane
- **Vehicles with Driving Assistance Package:**
  - Reacts to stationary vehicles detected in the urban speed range (except bicycles and motorcycles)
  - Takes one-sided overtaking restrictions on highways or multi-lane roads with separate

roadways into account (country-dependent)

ⓘ In the DYNAMIC SELECT menu, it is possible to set the driving mode of the Active Distance Assist DISTRONIC. Depending on the selected drive program, the driving behavior will be energy-saving, comfortable or dynamic. In the Active Distance Assist menu, the driving style can be permanently set to Comfort or Dynamic (→ page 292).

Vehicles with Active Parking Assist and Driving Assistance Package: if Active Distance Assist DISTRONIC has braked the vehicle to a standstill, it can automatically follow the vehicle in front when it drives off again within 30 seconds if the system detects that the driver is holding the steering wheel. If a critical situation is detected in the surrounding area when driving off,such as a person in the vehicle path, a visual and acoustic warning is given indicating that the driver must now take control of the vehicle. The vehicle is not accelerated any further.

Observe the notes on driving systems and your responsibility; you may otherwise fail to recognize dangers (→ page 272).

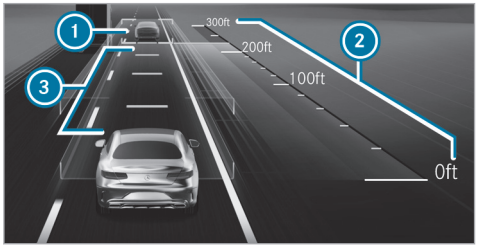

Display on the driver's display in the Assistance menu

1. Vehicle in front
2. Distance indicator
3. Specified distance set

Vehicle detected in front 1 is highlighted in green. It may also be in the lane to the left of your vehicle in situations where overtaking on the right is not permitted, for example on highways.

Permanent status display

Gray: Active Distance Assist DISTRONIC selected but not yet active.

Green speedometer, gray vehicle: Active Distance Assist DISTRONIC active, speed set.

Green: Active Distance Assist DISTRONIC active and vehicle detected.

The stored speed is shown under the permanent status display and highlighted on the speedometer. When Active Distance Assist DISTRONIC is passive, the status display is grayed out.

If the speed of the vehicle in front or the speed adjustment is less than the stored speed due to the route event ahead, the segments in the speedometer light up.

When the specified distance set 3 is increased or reduced, the display briefly appears.

ⓘ The green vehicle symbol will be displayed cyclically when the vehicle is ready to drive.

ⓘ If you depress the accelerator pedal beyond the setting of the Active Distance Assist DISTRONIC, the system is switched to passive mode. The following message appears briefly on the driver's display  Suspended.

System limits

The system may be impaired or may not function in the following instances:

- In snow, rain, fog, heavy spray, direct sunlight or greatly varying ambient light, or if there is glare.
- If the windshield in the area of the camera is dirty, fogged up, damaged or covered.
- If the radar sensors are dirty or covered.
- In parking garages or on roads with steep uphill or downhill gradients.
- If there are narrow vehicles in front, such as bicycles or motorcycles.

In addition, on slippery roads, braking or accelerating can cause one or several wheels to lose traction and the vehicle could then skid.

Do not use Active Distance Assist DISTRONIC in these situations.

⚠ WARNING Risk of accident from acceleration or braking by Active Distance Assist DISTRONIC

Active Distance Assist DISTRONIC may accelerate or brake in the following cases, for example:

- If the vehicle pulls away using Active Distance Assist DISTRONIC.
- If the stored speed is called up and is considerably faster or slower than the currently driven speed.
- If Active Distance Assist DISTRONIC no longer detects a vehicle in front or does not react to relevant objects.

▶ Always carefully observe the traffic conditions and be ready to brake at all times.

▶ Take into account the traffic situation before calling up the stored speed.

⚠ WARNING Risk of accident due to insufficient deceleration by Active Distance Assist DISTRONIC

Active Distance Assist DISTRONIC brakes your vehicle with up to 50% of the possible deceleration. If this deceleration is not sufficient, Active Distance Assist DISTRONIC alerts you with a visual and acoustic warning.

▶ Adjust your speed and maintain a suitable distance from the vehicle in front.

▶ Brake the vehicle yourself and/or take evasive action.

⚠ WARNING Risk of accident if detection function of Active Distance Assist DISTRONIC is impaired

Active Distance Assist DISTRONIC does not react or has a limited reaction:

- when driving on a different lane or when changing lanes

- to pedestrians, animals, bicycles or stationary vehicles, or unexpected obstacles
- to complex traffic conditions
- to oncoming vehicles and crossing traffic

As a result, Active Distance Assist DISTRONIC may neither give warnings nor intervene in such situations.

▶ Always observe the traffic conditions carefully and react accordingly.

You can watch an animation on this topic via the following link:

Operating Active Distance Assist DISTRONIC

⚠ **WARNING** Risk of accident if detection function of Active Distance Assist DISTRONIC is impaired

Active Distance Assist DISTRONIC does not react or has a limited reaction:

- when driving on a different lane or when changing lanes
- to pedestrians, animals, bicycles or stationary vehicles, or unexpected obstacles
- to complex traffic conditions
- to oncoming vehicles and crossing traffic

As a result, Active Distance Assist DISTRONIC may neither give warnings nor intervene in such situations.

▶ Always observe the traffic conditions carefully and react accordingly.

⚠ **WARNING** Risk of accident from acceleration or braking by Active Distance Assist DISTRONIC

Active Distance Assist DISTRONIC may accelerate or brake in the following cases, for example:

- If the vehicle pulls away using Active Distance Assist DISTRONIC.
- If the stored speed is called up and is considerably faster or slower than the currently driven speed.
- If Active Distance Assist DISTRONIC no longer detects a vehicle in front or does not react to relevant objects.

▶ Always carefully observe the traffic conditions and be ready to brake at all times.

▶ Take into account the traffic situation before calling up the stored speed.

⚠ **WARNING** Risk of accident due to insufficient deceleration by Active Distance Assist DISTRONIC

Active Distance Assist DISTRONIC brakes your vehicle with up to 50% of the possible deceleration. If this deceleration is not sufficient, Active Distance Assist DISTRONIC alerts you with a visual and acoustic warning.

▶ Adjust your speed and maintain a suitable distance from the vehicle in front.

▶ Brake the vehicle yourself and/or take evasive action.

WARNING Risk of accident due to adjustment of speed by Active Speed Limit Assist.

The speed adopted by the Active Speed Limit Assist may be too high or incorrect in individual cases:

- At limit speeds below 12 mph (20 km/h)
- In wet or foggy conditions

▶ Ensure that the speed being driven always complies with the traffic laws.

▶ Adjust the speed being driven to the current traffic and weather conditions.

Requirements

- The electric parking brake is released.
- ESP® is activated and is not intervening.
- The transmission is in position D.
- All the doors are closed.
- The check on the radar sensor system has been completed successfully.
- Snow Chain Mode is not active (→ page 546).

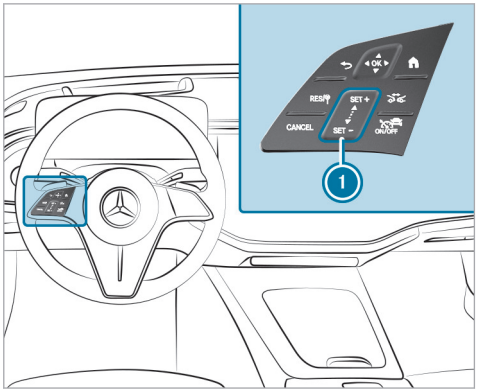

RES/	Adopts the stored/detected speed
CANCEL	Deactivates Active Distance Assist DISTRONIC
1 SET + SET -	Control panel for increasing/decreasing speed
	Increases/decreases the specified distance
ON/OFF	Activates/deactivates Active Distance Assist DISTRONIC

F214 0032 13

▶ **To operate Active Distance Assist DISTRONIC:** press the respective button with only one finger or swipe on the control panel.

Activates/deactivates Active Distance Assist DISTRONIC

▶ Press ON/OFF.

Activating Active Distance Assist DISTRONIC

▶ **To activate without a stored speed:** press SET + on the upper section or SET - on the lower section of control panel 1 or press RES/. Remove your foot from the accelerator pedal.

or

▶ **To activate with a stored speed:** press RES/. Remove your foot from the accelerator pedal. The last stored speed will be called up and maintained by the vehicle.

If the stored speed has been deleted, the current vehicle speed will be stored.

Increasing or reducing the speed

- To increase the stored speed: swipe upwards from the bottom of control panel (1).
  - The stored speed will be increased by 1 mph (1 km/h).
- To decrease the stored speed: swipe downwards from the top of control panel (1).
  - The stored speed will be decreased by 1 mph (1 km/h).

or

- Briefly press SET+ on the upper section or SET- on the lower section of control panel (1).
  The stored speed will be increased or reduced by 5 mph (10 km/h).

or

- Accelerate the vehicle to the desired speed.
- Press SET+ on the upper section of control panel (1).

Adopting the limit speed shown on the driver's display

- To activate Active Distance Assist DISTRONIC: press SET+, SET- or RES.
- To accept the displayed speed limit: press RES.
  The limit speed shown on the driver's display will be adopted as the stored speed. The vehicle will adapt its speed to that of the vehicle in front, but only up to the stored speed, or will limit its speed accordingly.

ⓘ A speed limit shown on the driver's display will be adopted only during travel, not when the vehicle is stationary.

Pulling away with Active Distance Assist DISTRONIC

- Activate Active Distance Assist DISTRONIC and remove your foot from the brake pedal.
- Press RES.

or

- Depress the accelerator pedal briefly and firmly.
  The functions of Active Distance Assist DISTRONIC will still be active.

Reducing or increasing the specified distance from the vehicle in front

- Press .
  The  indicator will appear. The specified distance will be reduced by one level.

  If the lowest level is already selected, the selection will jump to the highest level.

Deactivates Active Distance Assist DISTRONIC

⚠ **WARNING** Risk of an accident due to Active Distance Assist DISTRONIC being active when you leave the driver's seat

If you leave the driver's seat while the vehicle is being braked by Active Distance Assist DISTRONIC only, the vehicle can roll away.

- Always deactivate Active Distance Assist DISTRONIC and secure the vehicle to prevent it from rolling away before you leave the driver's seat.

▶ Press CANCEL.

ⓘ If you brake or deactivate ESP® or if ESP® intervenes, Active Distance Assist DISTRONIC will be deactivated.

Function of Active Speed Limit Assist

If a change in speed limit is detected and the automatic adoption of speed limits is switched on, this will automatically be adopted as the stored speed (→ page 292). Speed limits below 12 mph (20 km/h) will not be adopted.

The vehicle's speed will be adjusted when the vehicle is level with the traffic sign at the latest. In the case of signs indicating entry into an urban area, the speed will be adapted according to the speed permitted within the urban area. The speed limit indicator on the driver's display will always be updated when the vehicle is level with the traffic sign.

If you are driving on a German freeway and there is no speed limit, the system will use the speed stored for a stretch of road with no speed limit as the set speed. If you do not alter the stored speed on a stretch of road with no speed limit, the recommended speed of 80 mph (130 km/h) will be adopted.

If you have put Active Distance Assist DISTRONIC into passive mode by pressing the accelerator pedal, only speed limits that are higher than the set speed will be adopted.

The maximum permissible speed does not take the road condition and current weather and traffic conditions into account. Adjust your speed accordingly as and when necessary.

Observe the notes on driving systems and your responsibility; you may otherwise fail to recognize dangers (→ page 272).

System limits

The system limits of Traffic Sign Assist apply to the detection of traffic signs (→ page 306).

Speed limits below 12 mph (20 km/h) will not automatically be adopted by the system as the stored speed. Temporary speed restrictions (e.g. for a certain time or due to weather conditions) cannot be properly detected by the system.

Adjust your speed in these situations.

⚠ **WARNING** Risk of accident due to adjustment of speed by Active Speed Limit Assist.

The speed adopted by the Active Speed Limit Assist may be too high or incorrect in individual cases:

- At limit speeds below 12 mph (20 km/h)
- In wet or foggy conditions

▶ Ensure that the speed being driven always complies with the traffic laws.

▶ Adjust the speed being driven to the current traffic and weather conditions.

You can watch an animation on this topic via the following link:

Function of route-based speed adaptation

When Active Distance Assist DISTRONIC is activated, the vehicle speed will be adapted accordingly to the route events ahead. Depending on the drive program selected, the vehicle will negotiate a route event ahead in an energy-saving, comfortable or dynamic manner. When the route event has been passed, the vehicle will accelerate again to

the stored speed. The set distance to the vehicle in front, vehicles detected ahead and speed restrictions ahead will be taken into account.

Route-based speed adaptation can be activated in the multimedia system (⟶ page 292).

The following route events will be taken into account:

- Bends
- Traffic circles
- T-intersections
- Turns and exits
- Traffic jams ahead (only with Live Traffic (⟶ page 435))

Also, the speed will be reduced if the turn signal indicator is switched on and one of the following situations is detected:

- Turning off at intersections
- Driving in slowing-down lanes
- Driving in lanes adjacent to slowing-down lanes

The driver is responsible for choosing the right speed and observing other road users. This applies in particular to intersections, traffic circles and traffic lights, as route-based speed adaptation does not brake the vehicle to a standstill.

When route guidance is active, the first speed adjustment will be carried out automatically. If the turn signal indicator is switched on, the selected route will be confirmed and further speed adjustment will be activated.

Speed adjustment will be canceled in the following cases:

- If the turn signal indicator is switched off before the route event and it is therefore assumed that the route event is not relevant to the driver
- If the driver depresses the accelerator or brake pedal during the process

System limits

Route-based speed adaptation does not take right of way regulations into account. The driver is responsible for complying with road traffic regulations and driving at a suitable speed.

In difficult conditions, the speed selection made by the system may not always be suitable. This applies to the following situations, for example:

- The road's course is not clearly visible
- Road narrowing
- Varying maximum permissible speeds in individual lanes, e.g. at toll stations
- Wet road surfaces, snow or ice

The driver will need to intervene accordingly in these situations.

WARNING Risk of accident in spite of route-based speed adaptation

Route-based speed adaptation can malfunction or be temporarily unavailable in the following situations:

- If the driver does not follow the calculated route
- If map data is not up-to-date or available
- In the event of roadworks
- In bad weather or road conditions

- If the accelerator pedal is depressed
- In the event of electronically displayed speed limitations

▶ Adapt the speed to the traffic situation.

Setting Active Distance Assist DISTRONIC driving styles

Requirements

- Active Distance Assist DISTRONIC is activated.

Multimedia system:

→ ⌂ ⏩ Settings ⏩ Assistance ⏩ Driving ⏩ Active Distance Assist

Selecting a driving style

▶ Select Based on DYNAMIC SELECT, Dynamic or Comfortable.

ⓘ Further information about Active Distance Assist DISTRONIC (→ page 287).

Setting speed adjustment

▶ Select Route Based or Speed limit.
When these functions are active, the vehicle speed will be adjusted depending on the route events ahead.

ⓘ If one of the following systems is activated, the detected speed can be manually adopted as the speed limit:

- Active Distance Assist DISTRONIC
- Cruise control
- Variable limiter

ⓘ Further information on speed adjustment (→ page 290).

Function of Active Stop-and-Go Assist

Active Stop-and-Go Assist helps you when in traffic jams on multi-lane roads with separate roadways by automatically pulling away within up to 60 seconds and with moderate steering maneuvers. It orients itself using the vehicle in front and lane markings. Active Stop-and-Go Assist automatically maintains a safe distance from the vehicle in front and vehicles cutting in.

Active Stop-and-Go Assist requires you, as the driver, to keep your hands on the steering wheel at all times so that you are able to intervene at any time to correct the course of the vehicle and keep it in lane.

Observe the notes on driving systems and your responsibility; you may otherwise fail to recognize dangers (→ page 272).

Active Stop-and-Go Assist activates automatically when all the following conditions are met:

- You are in a traffic jam on a highway or high-speed major road.
- Active Distance Assist DISTRONIC is activated and active (→ page 287).
- Active Steering Assist is activated and active (→ page 295).
- You are traveling no faster than 35 mph (60 km/h).

When Active Stop-and-Go Assist is active the  status display appears on the driver's display.

System limits

The system limitations of Active Distance Assist DISTRONIC and Active Steering Assist apply to Active Stop-and-Go Assist (→ page 293).

Active Steering Assist

Function of Active Steering Assist

Active Steering Assist is only available up to a speed of 130 mph (210 km/h). The system helps you to stay in the center of the lane by means of moderate steering interventions. Depending on the vehicle's speed, Active Steering Assist uses the vehicles ahead and lane markings as a reference.

ⓘ Depending on the country, Active Steering Assist can use the surrounding traffic as a reference in the lower speed range. If necessary, Active Steering Assist can then also provide assistance outside the center of the lane.

If the detection of lane markings and vehicles ahead is impaired, Active Steering Assist switches to passive mode. The system provides no support in this case.

Permanent status display on the driver's display

- **Gray:** activated and passive
- **Green:** activated and active
- **Red, flashing:** prompt to the driver to actively confirm or transition from active to passive status, system limit detected

ⓘ During the transition from active to passive status, the symbol is shown as enlarged and flashing. Once the system is passive, the symbol is shown as gray on the driver's display.

Touch detection

The driver is required to keep their hands on the steering wheel at all times and be able to intervene at any time to correct the course of the vehicle and keep it in lane. The driver must expect a change from active to passive mode or vice versa at any time.



If the system detects that the driver has not steered the vehicle for a considerable period of time or has removed their hands from the steering wheel, a visual warning is given first. Display 1 appears on the driver's display. If the driver still does not steer the vehicle, or gives no confirmation to the system, a warning tone sounds in addition to the visual warning message.

If the driver does not react to this warning for a considerable period, an emergency stop is initiated (→ page 295).

The warning is not issued or is stopped as soon as the system detects that the driver is touching the steering wheel.

Touch detection may be limited or may not function if there is no direct contact between hand and steering wheel, e.g. if you are wearing gloves or if there is a steering wheel cover on the steering wheel.

If Active Steering Assist detects that a system limit has been reached, a visual warning is issued and a warning tone sounds.

Observe the notes on driving systems and your responsibility; you may otherwise fail to recognize dangers (→ page 272).

System limits

Active Steering Assist has a limited steering torque for lateral guidance. In some cases, the steering intervention is not sufficient to keep the vehicle in the lane.

The system may be impaired or may not function in the following instances:

- Visibility is poor, e.g. due to snow, rain, fog, heavy spray, greatly varying ambient light or strong shadows on the road.
- There is glare, e.g. from oncoming traffic, direct sunlight or reflections.
- Insufficient road illumination.
- The windshield is dirty, fogged up, damaged or covered in the vicinity of the camera, e.g. by a sticker.
- No, or several, unclear lane markings are present for one lane, or the markings change quickly, for example, in construction areas or at intersections.
- The lane markings are worn away, dark or covered up, e.g. by dirt or snow.
- If the distance to the vehicle in front is too short and thus the lane markings are not detected.
- The road is narrow and winding.
- There are obstacles in the lane or projecting out into the lane, such as object markers.

The system does not provide assistance in the following situations:

- On very tight bends and when turning.
- When crossing intersections.
- At traffic circles or toll stations.
- When actively changing lane without switching on the turn signal indicator.
- When the tire pressure is too low.

⚠ WARNING Risk of accident if Active Steering Assist unexpectedly stops functioning

If the system limits of Active Steering Assist are reached there is no guarantee that the system will remain active or will keep the vehicle in lane.

- ▶ Always keep your hands on the steering wheel and observe the traffic carefully.
- ▶ Always steer the vehicle paying attention to traffic conditions.

⚠ WARNING Risk of accident if Active Steering Assist unexpectedly intervenes

The detection of lane markings and objects may malfunction and cause unexpected steering interventions.

- ▶ Steer according to traffic conditions.

You can watch an animation on this topic via the following link:

Activating/deactivating Active Steering Assist

Requirements

- ESP® is activated, but is not intervening.
- Active Distance Assist DISTRONIC is activated.

Multimedia system:

→ ⌂ ▸▸ Settings ▸▸ Assistance ▸▸ Driving

▶ Activate or deactivate Active Steering Assist.

Function of Active Emergency Stop Assist

Active Emergency Stop Assist monitors the steering wheel and the accelerator and brake pedals. If the system detects a lack of driver activity and the vehicle threatens to leave its lane, a warning can be issued and an emergency stop initiated.

Vehicles without Driving Assistance Package: The system is available at speeds above approximately 37 mph (60 km/h).

Vehicles with Driving Assistance Package: If Active Steering Assist is switched off, the system will be available at speeds above approximately 37 mph (60 km/h).

If the vehicle is threatening to leave its lane, a warning will be issued in the following cases:

- The driver does not touch the steering wheel for an extended period of time or no steering movement can be measured for an extended period of time (depending on the vehicle equipment).
- Neither the accelerator nor the brake pedal is being depressed.

ⓘ **Vehicles with Driving Assistance Package:** If Active Steering Assist is switched on and active, only the steering wheel will be monitored by the system. If the driver does not touch the steering wheel for an extended period of time, a warning may be given despite pedal actuation.
Also observe the instructions on touch detection as part of Active Steering Assist (→ page 293).



Active Emergency Stop Assist will issue the following warnings in order:

- Indicator ① will appear on the driver's display.
- In addition to display ①, a warning tone will sound.
- A message reading Initiating Emergency Stop will appear on the driver's display, a continuous warning tone will sound, the vehicle will no longer accelerate and, if necessary, slight belt tensioning will be carried out.
- The vehicle speed will be reduced in increments until it is at a standstill. The brakes will also be applied in sharp jolts.

ⓘ **Vehicles with Driving Assistance Package:** If Active Distance Assist DISTRONIC is active and the driver unfastens their seat belt and opens the driver's door, an emergency stop can be initiated immediately.

Vehicles with Driving Assistance Package: A lane change to the adjacent lane (depending on the country) will be carried out if possible. It is possible only to change across one lane and only into the outer lane, and not onto the hard shoulder.

When automatic braking is initiated, Active Distance Assist DISTRONIC will be deactivated. Depending on the country, the hazard warning light system will also be switched on.

When the vehicle has been brought to a standstill:

- The vehicle will be secured with the electric parking brake.
- The vehicle will be unlocked.
- If possible, an emergency call will be placed to the Mercedes-Benz emergency call center.

Before automatic braking is initiated, you can cancel Active Emergency Stop Assist by steering.

You can cancel the intervention by Active Emergency Stop Assist after automatic braking is initiated through one of the following actions:

- Accelerating or braking: the emergency stop will be canceled, but the warning message, warning tone and power steering will remain active.
- Steering: power-assisted steering will be canceled, the warning message and warning tone will remain active and the brakes will continue to be applied.

ⓘ Active Emergency Stop Assist can initiate an emergency stop a maximum of three times within a driving cycle. After that, Active Steering Assist and Active Emergency Stop Assist will be disabled until the vehicle has been restarted.

System limits

For the detection of vehicles and other obstacles, observe the system limits of the following functions:

- Active Distance Assist DISTRONIC (→ page 284)
- Active Steering Assist (→ page 293)
- Active Lane Change Assist (→ page 296)
- Active Lane Keeping Assist (→ page 314)
- Active Brake Assist (→ page 300)

Vehicles without Driving Assistance Package:

Active Emergency Stop Assist will be inactive in the following cases:

- Active Lane Keeping Assist has reached a system limit.
-  Active Lane Keeping Assist is deactivated (white status display).
- Active Lane Keeping Assist is not operational (gray status display).

Active Lane Change Assist

Function of Active Lane Change Assist

Active Lane Change Assist helps the driver with changing lanes and is activated when the driver indicates briefly.

For this, the following conditions must be fulfilled:

- You are driving on a highway or high-speed major road.
- The vehicle's speed is between approximately 40 mph (65 km/h) and 110 mph (180 km/h).
- The neighboring lane is separated by a dashed lane marking.
- No vehicle or obstacle is detected in the adjacent lane.
- Active Lane Change Assist is selected in the multimedia system.
- Active Distance Assist DISTRONIC and Active Steering Assist are switched on and active.



Indicator on the driver's display on the Assistance menu

1 Green arrow: lane change initiated
2 Red arrow: lane change canceled

When Active Lane Change Assist is available, the indicator will appear along with green arrows on the driver's display. If the system has been activated but is not currently available, the indicator will appear along with grey arrows on the driver's display.

If no vehicle or obstacle is detected in the adjacent lane and a lane change is permitted, the lane change will begin after the driver has indicated briefly. The lane change will be shown to the driver with a flashing green arrow next to the steering wheel symbol. Green arrow 1 will be displayed in the appropriate adjacent lane on the driver's display on the Assistance menu. A message reading Lane Change to the Left, for example, will also appear.

If a lane change is not possible directly after the driver has activated the turn signal indicator because an obstacle has been detected, for example, the arrow will also flash in green next to the steering wheel symbol . The neighboring lane will continue to be monitored. When the lane becomes clear, a lane change will be carried out and a message reading Lane Change to the Left, for example, will appear on the driver's display. When the green arrows stop flashing, activate the lane change again.

Active Lane Change Assist can be canceled in various situations, including the following:

- Change in the surrounding conditions (e.g. detected obstacle).
- The driver steers too sharply or in the opposite direction.
- The driver moves the turn signal indicator in the opposite direction.
- Active Distance Assist DISTRONIC or Active Steering Assist is deactivated.
- The vehicle cannot make the lane change as planned.

Cancellation of Active Lane Change Assist will be displayed as follows:

- The arrow in the selected direction of travel turns red.
- A corresponding message will also appear on the driver's display.
- In certain circumstances, a warning tone will sound.

⚠ WARNING Risk of accident when changing lane to an occupied adjacent lane

Lane Change Assist cannot always clearly detect if the adjacent lane is free.

The lane change might be initiated although the adjacent lane is not free.

- ▶ Before changing lanes, make sure that the neighboring lane is free and there is no danger to other road users.
- ▶ Monitor the lane change.

⚠ WARNING Risk of accident if Lane Change Assist unexpectedly stops functioning

If the system limitations for Lane Change Assist have been reached, there is no guarantee that the system will remain active.

Lane Change Assist cannot then assist you by applying steering torque.

- ▶ Always monitor the lane change and keep your hands on the steering wheel. Observe the traffic conditions and steer and/or brake if necessary.

Automatic Lane Change

Automatic Lane Change is a sub-function of Active Lane Change Assist. It can assist the driver in deciding when a lane change is appropriate and in executing it.

⚠ WARNING Risk of accident due to incorrectly triggered lane change

The system cannot always clearly recognize all situations in which a lane change is appropriate.

The system can initiate a lane change even though the traffic situation is not suitable or the neighboring lane is not available, not usable or occupied.

- ▶ Always monitor the traffic situation.
- ▶ If necessary, cancel the lane change by holding the steering wheel or countersteering slightly and return the vehicle to its own lane.

You can cancel a lane change initiated by the system at any time by holding the steering wheel or

countersteering slightly and returning the vehicle to its own lane.

For an Automatic Lane Change, the following conditions must be met:

- The conditions for activating Active Lane Change Assist are fulfilled.
- Automatic Lane Change is activated in the multimedia system.
- You are driving on a freeway in a country where the function is available.
- The road you are currently driving on allows lane changes (e.g. there are no tight bends).
- The vehicle speed is between approximately 40 mph (65 km/h) and 85 mph (140 km/h).

Active Lane Change Assist can initiate an automatic lane change in various situations, including the following:

- The set desired speed of Active Distance Assist DISTRONIC cannot be reached due to a slower vehicle in front.
- There is little traffic and the set desired speed of Active Distance Assist DISTRONIC can also be reached in a slower lane.
- A lane change is necessary to follow the set route in the navigation system or the road you are currently driving on. The lane change may take place before the request to do so appears in the navigation system.
- The system detects that the lane you are driving in will end soon.
- You are in the lane furthest to the right.

In particular, Active Lane Change Assist will not execute Automatic Lane Change in the following situations:

- If the vehicle is already in a lane that it should use to follow the set route in the navigation system.
- On some route sections, no lane change will be made to the lanes furthest to the right.
- The system detects that the neighboring lane will end soon.
- If Automatic Lane Change has been canceled by the driver, no lane change in that direction will be initiated for a certain time.
- If the driver has initiated a lane change in one direction or has changed lanes manually, no lane change in the opposite direction will be initiated for a certain time.

The same abort conditions apply to Automatic Lane Change as to driver-initiated lane changes with Active Lane Change Assist.

In addition, Automatic Lane Change can be canceled in the following circumstances in particular:

- The system detects a road work site marked off by traffic cones in the vehicle's own lane or in the neighboring lane during the lane change.
- The system detects that the reason for the lane change no longer exists.

Indicator on the driver's display

When Automatic Lane Change is turned on, the Automatic Lane Change On message will appear. When Automatic Lane Change is available, the indicator will appear in green instead of the  indicator. If Automatic Lane Change is available but not all conditions to activate the function are currently met, the **A** symbols will be shown in grey. If the system deems it advisable to change lanes and needs to adjust the traveled speed to

do so, the green A will flash on the side to which a lane change is to be made.

When Automatic Lane Change starts, for example, the Lane Change to the Left message will appear and a warning tone will sound.

When Automatic Lane Change is canceled, the A on the side to which a lane change should be made will turn red. Additional warning messages may also appear and another warning tone may sound in certain situations.

System limits

The system limits of Active Steering Assist apply to Active Lane Change Assist (→ page 293).

The system may also be impaired or may not function in the following situations:

- The sensors are damaged, covered or dirty (→ page 272).
- The exterior lighting shows a defect.
- The system does not detect a suitable road, such as on tight bends.
- The vehicle is at a road work site.

Automatic Lane Change may not function or may be impaired in the following situations in particular and could lead to lane changes being initiated incorrectly:

- The vehicle is at a road work site and/or the system has detected a road work site marked off by traffic cones.
- The system can no longer detect the lane marking correctly.
- It is raining heavily.
- Another vehicle changes to the same lane at the same time (e.g. when the vehicle is passing an on-ramp).

ⓘ The Active Lane Change Assist sensors will adjust automatically while a certain distance is being driven after the vehicle has been delivered. Active Lane Change Assist will be unavailable during this teach-in process, and no arrows will be displayed next to the Active Steering Assist symbol .

Observe the notes on driving systems and your responsibility; you may otherwise fail to recognize dangers (→ page 272).

Setting Active Lane Change Assist

Multimedia system:

→ ⌂ » Settings » Assistance » Driving

▶ Select Active Lane Change Assist.

▶ Choose between the On and Off setting options.

Active Brake Assist

Function of Active Brake Assist

Active Brake Assist consists of the following functions:

- Collision warning
- Autonomous braking function
- Situation-dependent brake boosting effect
- Sideguard Assist
- **Vehicles with Driving Assistance Package:** Evasive Steering Assist
- **Vehicles with Driving Assistance Package:** Intersection start-off function

Active Brake Assist can help you to minimize the risk of a collision with vehicles, cyclists or pedestrians or to reduce the effects of such a collision.

If Active Brake Assist has detected a risk of collision, a warning tone will sound and the distance warning lamp will light up.

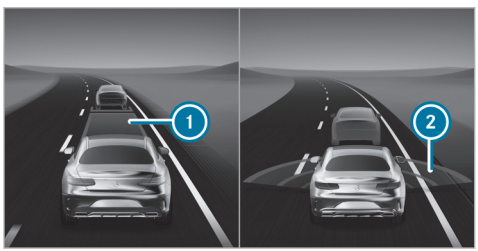

Indicator on the driver's display on the Assistance menu

On the Assistance menu, an insufficient distance to the vehicle in front (1) will be displayed in red. If you further reduce the distance, the vehicle in front will also be highlighted in red. When the system detects a risk of collision, red radar waves (2) will appear in front of your vehicle.

ⓘ **Vehicles with PRE-SAFE®:** depending on the country, an additional haptic warning will occur in the form of slight, repeated tensioning of the seat belt.

ⓘ **Vehicles with active ambient lighting:** If Warning Support is activated, the Active Brake Assist warning will also be accompanied by ambient lighting (→ page 211).

If you do not react to the warning, autonomous braking may be initiated in critical situations.

In particularly critical situations, Active Brake Assist may also initiate autonomous braking directly. In this case, the distance warning lamp and the warning tone will occur at the same time as brake application.

If you apply the brakes yourself in a critical situation or apply the brakes during autonomous braking, situation-dependent brake force boosting will occur. The brake pressure will increase up to maximum full-stop braking if necessary.



If autonomous braking or situation-dependent brake force boosting has occurred, pop-up (1) will appear on the driver's display and then automatically disappear after a short time.

If the autonomous braking function or situation-dependent brake force boosting is triggered, additional preventive measures for occupant protection (PRE-SAFE®) may also be initiated.

⚠ **WARNING** Risk of an accident caused by limited detection performance of Active Brake Assist

Active Brake Assist cannot always clearly identify objects and complex traffic situations.

In such cases, Active Brake Assist might:

- Give a warning or brake without reason
- Not give a warning or not brake

Active Brake Assist is only an aid. The driver is responsible for maintaining a sufficiently safe distance to the vehicle in front, vehicle speed and for braking in good time.

- ▶ Always pay careful attention to the traffic situation; do not rely on Active Brake Assist alone.
- ▶ Be prepared to brake or swerve if necessary.

If Active Brake Assist is deactivated or the functions are restricted, e.g. due to activation of another driving system, the OFF Active Brake Assist warning lamp will appear on the driver's display.

If the system is unavailable due to dirty or damaged sensors or due to a malfunction, or if the functions are restricted, the Active Brake Assist warning lamp will appear on the driver's display.

Also observe the system limits of Active Brake Assist.

The individual subfunctions are available in the following speed ranges:

Collision warning

Collision warning can assist you in the following situations at speeds above approximately 4 mph (7 km/h) with an intermittent warning tone and the distance warning lamp.

Vehicles without Driving Assistance Package:

- at speeds up to approximately 155 mph (250 km/h) when approaching vehicles ahead
- at speeds up to approximately 50 mph (80 km/h) when approaching stationary vehicles, pedestrians walking in the direction of travel and cyclists ahead
- at speeds up to approximately 43 mph (70 km/h) when approaching crossing pedestrians and cyclists
- at speeds up to approximately 37 mph (60 km/h) when approaching stationary pedestrians and cyclists

Vehicles with Driving Assistance Package:

- at speeds up to approximately 155 mph (250 km/h) when approaching vehicles ahead
- at speeds up to approximately 75 mph (120 km/h) when approaching crossing vehicles, pedestrians and cyclists
- at speeds up to approximately 62 mph (100 km/h) when approaching stationary vehicles
- at speeds up to approximately 50 mph (80 km/h) when approaching cyclists ahead
- at speeds up to approximately 43 mph (70 km/h) when approaching stationary pedestrians and cyclists

Autonomous braking function

If the vehicle is traveling at speeds above approximately 4 mph (7 km/h), the autonomous braking function may intervene in the following situations:

Vehicles without Driving Assistance Package:

- at speeds up to approximately 155 mph (250 km/h) when approaching vehicles ahead
- at speeds up to approximately 50 mph (80 km/h) when approaching cyclists ahead,

pedestrians walking in the direction of travel and stationary vehicles
- at speeds up to approximately 43 mph (70 km/h) when approaching crossing pedestrians and cyclists

Vehicles with Driving Assistance Package:
- at speeds up to approximately 155 mph (250 km/h) when approaching vehicles ahead
- at speeds up to approximately 75 mph (120 km/h) when approaching crossing vehicles, pedestrians and cyclists
- at speeds up to approximately 62 mph (100 km/h) when approaching stationary vehicles
- at speeds up to approximately 50 mph (80 km/h) when approaching cyclists ahead
- at speeds up to approximately 43 mph (70 km/h) when approaching stationary pedestrians and cyclists

Situation-dependent brake boosting effect

If the vehicle is traveling at speeds above approximately 4 mph (7 km/h), situation-dependent brake force boosting may intervene in the following situations.

Vehicles without Driving Assistance Package:
- at speeds up to approximately 155 mph (250 km/h) when approaching vehicles ahead
- at speeds up to approximately 50 mph (80 km/h) when approaching cyclists ahead, pedestrians walking in the direction of travel and stationary vehicles
- at speeds up to approximately 43 mph (70 km/h) when approaching crossing pedestrians and cyclists
- at speeds up to approximately 37 mph (60 km/h) when approaching stationary pedestrians and cyclists

Vehicles with Driving Assistance Package:
- at speeds up to approximately 155 mph (250 km/h) when approaching vehicles ahead
- at speeds up to approximately 75 mph (120 km/h) when approaching crossing vehicles, pedestrians and cyclists
- at speeds up to approximately 62 mph (100 km/h) when approaching stationary vehicles
- at speeds up to approximately 50 mph (80 km/h) when approaching cyclists ahead
- at speeds up to approximately 43 mph (70 km/h) when approaching stationary pedestrians and cyclists

Canceling a brake application of Active Brake Assist

You can cancel a brake application of Active Brake Assist at any time by:
- Fully depressing the accelerator pedal or with kickdown.
- Releasing the brake pedal.

Active Brake Assist may cancel the brake application when one of the following conditions is fulfilled:
- You maneuver to avoid the obstacle.
- There is no longer a risk of collision.
- An obstacle is no longer detected in front of your vehicle.

Reaction to oncoming road users (only vehicles with Driving Assistance Package)

Active Brake Assist can also react to detected oncoming road users:

- Reaction up to speeds of approximately 62 mph (100 km/h)
- Warning for oncoming road users via warning tone and distance warning lamp
- Autonomous braking application in order to reduce the severity of an accident

Cornering function

If the system detects a danger of collision from oncoming road users when you are turning across an oncoming lane, autonomous braking can be initiated at speeds of up to approximately 12 mph (20 km/h).

Intersection start-off function (vehicles with Driving Assistance Package only)

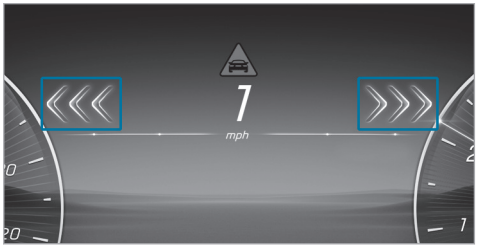

If a risk of collision with other crossing vehicles is detected when you are pulling away or driving at walking pace, three red arrows pointing in the direction of the crossing road user together with the distance warning lamp will light up on the driver's display. If the situation is particularly critical, the arrows will flash. A warning tone will also sound. If you do not react to the warning in critical situations, acceleration may be restricted or autonomous braking may be initiated. Autonomous braking can also prevent the vehicle from pulling away and hold it at a standstill. In particularly critical situations, Active Brake Assist may also initiate autonomous braking directly. In this case, the distance warning lamp and the warning tone will occur at the same time as brake application.

If autonomous braking or situation-dependent brake force boosting has occurred, a pop-up will appear on the driver's display and then automatically disappear after a short time.

In the Late setting of Active Brake Assist, the purely visual warning level and the limitation of possible acceleration will be deactivated. If the situation is particularly critical, a visual warning can still be issued, a warning tone can be emitted and autonomous braking may be initiated.

Evasive Steering Assist

WARNING Risk of accident despite Evasive Steering Assist

Evasive Steering Assist cannot always recognize objects or complex traffic situations clearly.

F214 0032 13

Moreover, the steering support provided by Evasive Steering Assist is not sufficient to avoid a collision.

- ▶ Always pay careful attention to the traffic situation; do not rely on Evasive Steering Assist alone.
- ▶ Be prepared to brake or swerve if necessary.
- ▶ End the support by actively steering in non-critical situations.
- ▶ Drive at an appropriate speed if there are pedestrians close to the path of your vehicle.

Evasive Steering Assist has the following characteristics:

- Detection of pedestrians, cyclists and vehicles.
- Assistance through power-assisted steering if a swerving maneuver is detected.
- Activation by an abrupt steering movement in the event of a swerving maneuver.
- Assistance during swerving and straightening of the vehicle.
- Reaction from a speed of approximately 12 mph (20 km/h) up to a speed of approximately 68 mph (110 km/h).

You can cancel assistance from Evasive Steering Assist at any time by countersteering.

System limits

Full system performance will not be available for a short time after you switch the vehicle on or after you drive off. As long as the functions are restricted, the  Active Brake Assist warning lamp may also be shown on the driver's display. Depending on the environmental conditions, it may take a few minutes before full system performance is available.

The system may be impaired or may not function, particularly in the following situations:

- In snow, rain, fog, heavy spray, direct sunlight or greatly varying ambient light, or if there is glare.
- If the sensors are dirty, fogged up, damaged or obscured. (→ page 272)
- If the sensors are impaired due to interference from other radar sources, e.g. intense radar reflections in parking garages.
- If a loss of tire pressure or a defective tire has been detected and displayed.
- In complex traffic situations where objects cannot always be clearly identified.
- If pedestrians, cyclists or vehicles move quickly into the sensor detection range.
- If road users are hidden by other objects or are located close to other objects.
- If the typical outline of a pedestrian or cyclist cannot be distinguished from the background.
- If a pedestrian or cyclist is not detected as such, e.g. due to special clothing or other objects.
- If the driver's seat belt is not fastened.
- On tight bends.

You can watch an animation on this topic via the following link:

Setting Active Brake Assist

Requirements

- The vehicle is switched on.

Multimedia system:

→ ⌂ ›› Settings ›› Assistance ›› Collision Avoidance

▶ Activate or deactivate the function.

ⓘ It is recommended that you always leave Active Brake Assist activated.

When Active Brake Assist is deactivated, the distance warning function, the collision warning, the autonomous braking function and Evasive Steering Assist are deactivated.

ⓘ If Active Brake Assist is deactivated, the OFF symbol appears in the status area of the driver's display, and the system is reactivated the next time the vehicle is started.

Setting the timing of warnings

▶ Select ⚙ next to Active Brake Assist.

▶ Select Early, Medium or Late.

Traffic Sign Assist

Function of Traffic Sign Assist

ⓘ This function is an on-demand feature (→ page 81).

Traffic Sign Assist detects the traffic signs with the multifunction camera and compares them with the information on the digital road map of the navigation system. It assists you by displaying detected speed limits and overtaking restrictions on the driver's display. The maximum permissible speed can also be shown on the head-up display.

The system can issue a warning when you exceed the maximum permissible speed.

In some countries, the system can provide you with further functions and can warn you when you are approaching pedestrian crossings or when you are about to drive past stop signs or red lights unintentionally.

The camera can also detect and analyze traffic signs with a restriction indicated by an additional sign (e.g. when wet).

Traffic Sign Assist portrays only selected signs on the driver's display. Actual traffic signs and speed limits have priority over traffic signs and speed limits shown on the driver's display.

Also observe the following information:

- select a speed adapted to the traffic, surroundings and weather conditions
- observe actual traffic signs
- observe applicable traffic rules and regulations

Observe the notes on driving systems and your responsibility; you may otherwise fail to recognize dangers (→ page 272).

Displays on the driver's display

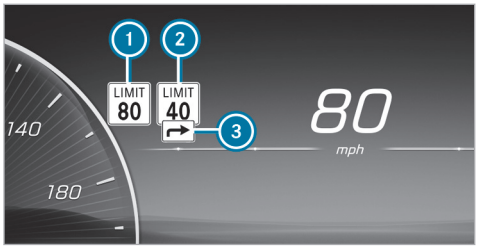

1 Permissible speed
2 Permissible speed when there is a restriction
3 Additional sign with restriction

The system can show up to two traffic signs on the driver's display simultaneously. The system always prioritizes displaying speed limits. No more than one traffic sign with a maximum permissible speed can be shown on the head-up display. If two speed signs are shown on the driver's display, e.g. when restrictions are detected, the value of left-hand speed limit 1 is always transmitted to cruise control or Active Distance Assist DISTRONIC for adoption and is shown on the head-up display.

Important information from other systems can lead to the traffic signs fading out for a short time.

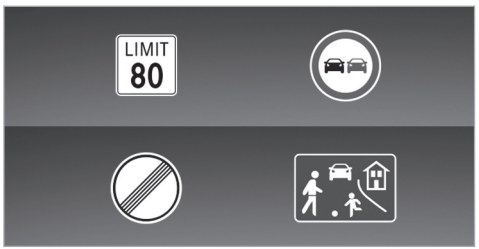

Examples of traffic signs which can be displayed

Traffic Sign Assist can detect and display the following traffic signs 1:

- Speed limitations
- End of the speed limit
- Overtaking restrictions
- Play streets
- Recommended speeds

Traffic Sign Assist can detect the following additional signs 3 and, if necessary, analyze the relevance of the restrictions using other vehicle sensors:

- When wet
- Slippery road surfaces
- In fog
- Temporary restrictions
- Exits
- Restrictions for car/trailer combinations

Traffic Sign Assist also uses data from the digital street map in the navigation system. When you leave or enter a municipality or change roads, on a highway on- or off-ramp, for example, or after you turn at an intersection, the display on the driver's display can thus be updated without a traffic sign having been detected.

ⓘ Regularly update the digital road map of the navigation system to enable Traffic Sign Assist to work optimally (→ page 31).

Depending on vehicle equipment and country, the system can also display speed restrictions ahead on the driver's display and on the head-up display. The driver's display can also show the distance to an upcoming lower limit speed. For this purpose, information from the digital road map of the navigation system is used. The Assistance menu can also display a dynamic visualization of the speed limits ahead.

If Traffic Sign Assist cannot determine the currently applicable maximum permissible speed (e.g. due to missing signs), the following display appears on the driver's display:



Traffic Sign Assist is not available in all countries. If the vehicle is in a country where Traffic Sign Assist is not supported, this is displayed continuously.

If Traffic Sign Assist is temporarily or permanently unavailable due to a technical fault or if the windshield is dirty, the Traffic Sign Assist warning lamp will appear on the driver's display.

ⓘ Please also note the information on the display messages of Traffic Sign Assist (→ page 700).

Warning when the maximum permissible speed is exceeded

The system can warn you if you unintentionally exceed the maximum permissible speed. Depending on the country, you can set in the multimedia system by how much the maximum permitted speed may be exceeded before a warning is given. You can switch off the warning or set whether the warning should be visual (by flashing the traffic sign on the driver's display) or visual and audible. The selected setting is confirmed by an indication on the driver's display.

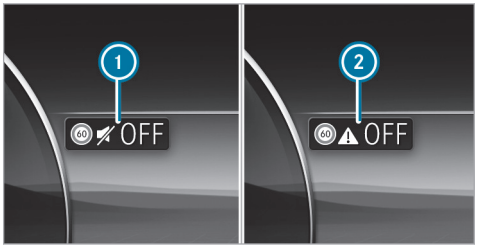

① Warning only visual
② Warning off

ⓘ The type, duration and deployment thresholds of the speed warning as well as the possibility of setting the deployment thresholds from which the warning is to be triggered are subject to the country-specific legislation of the country in which the vehicle is delivered.

Additional functions of Traffic Sign Assist (country-specific)

Warning for no-entry signs: Traffic Sign Assist can warn you if you drive the wrong way down a sec-

tion of road, for example on highway on-ramps or one-way streets.

Warning at pedestrian crossings: if you approach pedestrian crossings, provided that pedestrians are in the danger zone or are moving towards it, Traffic Sign Assist can warn you up to a speed of approximately 44 mph (70 km/h).

Warning at stop signs: Traffic Sign Assist can warn you up to a speed of approximately 44 mph (70 km/h) if you are about to drive past a stop sign unintentionally. For this to be possible, the signs must be clear, for example if the system detects more than one stop sign, or a stop sign can be confirmed using the digital navigation map. No warning can be issued if several different signs are detected.

Warning at red lights: Traffic Sign Assist can warn you up to a speed of approximately 44 mph (70 km/h) if you are about to drive through a red light unintentionally.

For this to happen, the following conditions must be met:

- Several traffic lights have been detected.
- All traffic lights detected are red.
- At least one of the red traffic lights detected is on the front passenger side beside the vehicle's own lane.
- The traffic lights are in the following sequence (from top to bottom): red, yellow, green.

ⓘ You can activate or deactivate the warning function in the Traffic Sign Assist menu under Further Warnings(→ page 310).

System limits

The system may be impaired or may not function particularly in the following situations:

- If visibility is poor, e.g. due to insufficient illumination of the road, highly variable shade conditions, rain, snow, fog, swirling dust or heavy spray.
- If there is glare, e.g. from oncoming traffic, direct sunlight or reflections.
- If there is dirt on the windshield in the vicinity of the multifunction camera or if the camera is fogged up, damaged or obscured.
- If the traffic signs are difficult to see because, for example, they are dirty, obscured, faded, iced over, damaged, inconveniently positioned, insufficiently illuminated or distorted.
- Active traffic signs with LED displays may not be detected correctly or at all due to technical factors, such as transmission frequency.
- If the information on the navigation system's digital map is incorrect, incomplete or out of date.
- If the signs, road markings or road layout are ambiguous, e.g. in the case of traffic signs in construction sites, at exits and driveways, in the case of adjacent lanes or parallel roads, in the case of pedestrian crossing markings at traffic lights
- If the signage or road markings do not comply with the standard
- If the signage, road markings or road guidance is country-specific and deviates from the route guidance of the navigation system, e.g. in or after road works
- After sharp turns and tight bends, when traffic signs are outside the camera's field of vision.
- If you overtake vehicles with traffic signs which are affixed or attached to them.

Setting Traffic Sign Assist

Multimedia system:

→ ⌂ ▸▸ Settings ▸▸ Assistance ▸▸ Assistance ▸▸ Traffic Sign Assist

Activating or deactivating the speed warning

▶ Switch off Speed Limit Warning.
The speed warning remains off according to country-specific legislation until the next time the vehicle is switched on or off and the driver's door is opened.

Change the type of speed warning

▶ Change the warning to Visual only or Visual and acoustic.

Setting the warning threshold

This value determines the speed at which a warning is issued when exceeded.

▶ Set the desired speed under Warning Threshold.

Activating or deactivating further functions of Traffic Sign Assist

▶ Switch Further Warnings on or off.
The available functions are switched on or off.

Set the type of warning for other functions

▶ Select Visual only or Visual and acoustic.

Traffic light view

Information about the traffic light view

The traffic light view supports the driver when waiting in front of a red light by displaying the camera image on the central display. The camera image is displayed when the driver is the first vehicle in front of the red light and faded out when the vehicle drives off.

Displaying traffic light view

Requirements

- The Traffic Light View option is switched on.
- A traffic light view is available.

Multimedia system:

→ ⌂ ▸▸ Settings ▸▸ Assistance ▸▸ Assistance ▸▸ Traffic Light View

ⓘ This function is not available in all countries.

If the vehicle is in first position at a traffic light, the camera image with traffic light view is shown on the central display.

When the vehicle pulls away, the camera image is faded out.

▶ Activate ⬬ or deactivate ⬬ Traffic Light View.

Using other available functions

▶ Select ⚙.

▶ Select On Request or Automatic.
If On Request is set and a traffic light view is available, the Tap Here for Traffic Light View message is displayed. The camera image is shown after confirmation of the message.

When Automatic is set, the camera image is automatically displayed when the traffic light view is available.

Blind Spot Assist and Active Blind Spot Assist

Function of Blind Spot Assist and Active Blind Spot Assist with exit warning

Blind Spot Assist and Active Blind Spot Assist use radar sensors to monitor the area up to 130 ft (40 m) behind and 10 ft (3 m) next to your vehicle.

The system can detect vehicles traveling at speeds of approximately 8 mph (12 km/h) and above and issue a warning if they move into the monitoring range.

Status indicator on the driver's display

Grey: the system is activated but inoperative.

Green: the system is activated and operational.

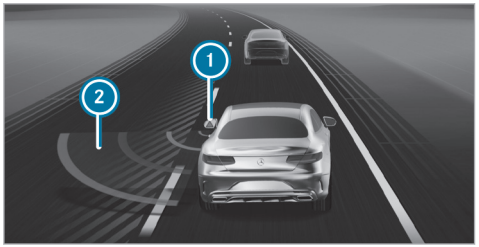

Indicator on the driver's display on the Assistance menu

1 Warning lamp on the outside mirror
2 Red radar waves

If a vehicle is detected at speeds above approximately 8 mph (12 km/h) and this vehicle enters the warning range immediately afterwards, the warning lamp on the corresponding outside mirror will light up red. On the Assistance menu, the lamp on outside mirror 1 will also light up red, and the lane in which the vehicle is detected will be hatched out.

If a vehicle is detected in the warning range and you switch on the turn signal indicator in the corresponding direction, a double warning tone will sound once and the warning lamp on the corresponding outside mirror will flash red. Red radar waves 2 will be displayed next to your vehicle on the assistant display.

If the turn signal indicator remains on, the indicator on the outside mirror will flash for all other detected vehicles, but no further warning tone will sound. If you overtake a vehicle quickly, no warning will be given.

ⓘ **Vehicles with active ambient lighting:** If Warning Support is activated, the warning will also be highlighted by the ambient lighting (→ page 211).

Observe the notes on driving systems and your responsibility; you may otherwise fail to recognize dangers (→ page 272).

⚠ **WARNING** Risk of accident despite Blind Spot Assist

Blind Spot Assist does not react to vehicles approaching and overtaking you at a greatly different speed.

Blind Spot Assist cannot warn drivers in this situation.

- Always pay careful attention to the traffic situation and maintain a safe distance at the side of the vehicle.

⚠ WARNING Risk of accident despite Active Blind Spot Assist

Active Blind Spot Assist does not react to the following:

- if you overtake a vehicle too closely so that it is in the blind spot area
- if vehicles traveling at a much faster speed approach and then overtake

Active Blind Spot Assist may not give warnings or intervene in such situations.

- Always pay careful attention to the traffic situation and maintain a safe distance at the side of the vehicle.

Exit warning

The exit warning is an additional function of Blind Spot Assist and Active Blind Spot Assist and can warn vehicle occupants attempting to leave a stationary vehicle about approaching vehicles.

⚠ WARNING Risk of accident despite exit warning

The exit warning neither reacts to stationary objects nor to persons or road users approaching you at a greatly differing speed.

The exit warning cannot warn drivers in these situations.

- Always pay particular attention to the traffic situation when opening the doors and make sure there is sufficient clearance.

If a vehicle is detected in the monitoring range, the red warning lamp on the corresponding outside mirror will light up.

If a vehicle occupant pulls the door handle on the side of the warning, a warning tone will sound twice and the ambient lighting on the respective door and the warning lamps on the corresponding outside mirror will flash red.

Vehicles with MBUX Interior Assistant: the visual warning will begin as soon as the hand of a vehicle occupant moves into the area of the door.

ⓘ **Vehicles with ambient lighting or active ambient lighting:** theWarning Support of the ambient lighting can be activated and deactivated (→ page 211).

ⓘ Warning Support may differ depending on the equipment and may vary according to the setting.

This exit warning is available only when Blind Spot Assist or Active Blind Spot Assist is active.

After the vehicle is switched off, the exit warning will continue to function for a few minutes. When the outside mirror warning lamp flashes three times, the exit warning is no longer available.

The exit warning is only an aid and not a substitute for the attention of vehicle occupants. The responsibility for opening and closing the doors and for leaving the vehicle remains with the vehicle occupants.

System limits

Blind Spot Assist and Active Blind Spot Assist may be limited in the following situations, in particular:

- if there is dirt on the sensors or the sensors are obscured
- in poor visibility, e.g. due to fog, heavy rain or snow
- if there are narrow vehicles, e.g. bicycles or motorbikes
- if the road has very wide or narrow lanes
- if vehicles are not driving in the middle of their lanes

Warnings may be issued in error if you are driving close to crash barriers or similar continuous lane borders. Always make sure that there is sufficient distance to the side for other traffic or obstacles.

Warnings may be interrupted if you drive alongside long vehicles, such as trucks, for a prolonged time.

Blind Spot Assist and Active Blind Spot Assist will not be operational when reverse gear is engaged.

Additionally, the exit warning may be limited in the following situations:

- when the sensors are blocked by adjacent vehicles in narrow parking spaces
- when people are approaching the vehicle
- in the event of stationary or slowly moving objects

You can watch an animation on this topic via the following link:

Function of the brake application of Active Blind Spot Assist

ⓘ The brake application function is available only for vehicles with a Driving Assistance Package.

If Active Blind Spot Assist detects a risk of a side impact in the monitoring range, a course-correcting brake application is carried out. This is designed to help you avoid a collision.

The course-correcting brake application is available in the speed range between approximately 20 mph (30 km/h) and approximately 125 mph (200 km/h).

⚠ WARNING Risk of accident despite brake application of Active Blind Spot Assist

A course-correcting brake application cannot always prevent a collision.

- ▶ Always steer, brake or accelerate yourself, especially if Active Blind Spot Assist warns you or makes a course-correcting brake application.
- ▶ Always maintain a safe distance at the sides.

⚠ WARNING Risk of accident despite Active Blind Spot Assist

Active Blind Spot Assist does not react in the following situations:

- If you overtake vehicles at a high speed.
- If vehicles approach and overtake you at a greatly different speed.

Active Blind Spot Assist may not give warnings or intervene in such situations.

▶ Always pay careful attention to the traffic situation and maintain a safe distance at the side of the vehicle.



If a course-correcting brake application occurs, the red warning lamp flashes in the outside mirror and a warning tone sounds. In addition, display 1 indicating the danger of a side collision appears on the driver's display.

In rare cases, the system may make an inappropriate brake application. This brake application may be canceled at any time by steering slightly in the opposite direction or accelerating.

System limits

Note the system limits of Active Blind Spot Assist; you may otherwise fail to recognize dangers (→ page 311).

Either a course-correcting brake application appropriate to the driving situation or none at all may occur in the following situations in particular:

- Vehicles or obstacles, e.g. crash barriers, are located on both sides of your vehicle.
- A vehicle approaches too closely at the side.
- You have adopted a sporty driving style with high cornering speeds.
- You brake or accelerate significantly.
- A driving safety system intervenes, e.g. ESP®.
- ESP® is deactivated.
- A loss of tire pressure or a defective tire is detected.

Activating/deactivating Blind Spot Assist or Active Blind Spot Assist

Multimedia system:

→ ⌂ ▸▸ Settings ▸▸ Assistance ▸▸ Collision Avoidance

▶ Activate or deactivate Active Blind Spot Assist.

Active Lane Keeping Assist

Function of Active Lane Keeping Assist

Active Lane Keeping Assist monitors the area in front of your vehicle by means of the multifunction camera (→ page 272) and can warn you before you leave your lane unintentionally. The system can guide you back into your lane by means of a course-correcting steering intervention and will also issue a warning via haptic feedback through the steering wheel. Active Lane Keeping Assist is available in the speed range between 37 mph (60 km/h) and 124 mph (200 km/h).

The system can intervene in the following situations:

- Active Lane Keeping Assist detects a lane marking.
- One of your front wheels goes over a lane marking.

If you activate the turn signal indicator, no steering intervention will occur on the corresponding side.

If you leave the lane without activating the turn signal indicator, but danger of a collision with a moving obstacle is detected in your lane, no steering intervention will occur.

Vehicles with Blind Spot Assist or Driving Assistance Package: if the system detects an obstacle, such as another vehicle in the adjacent lane, steering intervention will occur regardless of the turn signal indicator.



Indicator 1 will appear on the driver's display and a warning tone will sound in the following situations:

- A steering intervention by Active Lane Keeping Assist lasts longer than approximately ten seconds.
- The system carries out two or more steering interventions within approximately three minutes without any steering intervention from the driver.

In the Active Lane Keeping Assist settings, you can set the sensitivity of the system and the level of support. Additionally, you can set whether the system should react to broken lane markings or only continuous lane markings (→ page 317).

If ATTENTION ASSIST has detected indications of fatigue or microsleep, the most sensitive setting will automatically be selected (→ page 280).

Status displays for Active Lane Keeping Assist

White: Active Lane Keeping Assist is deactivated.

If ESP® is deactivated or a tire pressure loss warning is displayed, Active Lane Keeping Assist will automatically be deactivated.

Yellow: there is a malfunction. Please also observe the display messages.

Geay: Active Lane Keeping Assist is activated, but not operating.

Green: Active Lane Keeping Assist is activated and operating. If the system is operational on only one side, the lane marking will be shown in green on the corresponding side.

Red: Active Lane Keeping Assist has guided you back into your lane with a course-

correcting steering intervention. The status display will flash if there is also a haptic warning in the steering wheel. The lane marking will be shown in red only on the side for which there is a warning.

Vehicles without Driving Assistance Package: if both lane markings are simultaneously shown in red on the status indicator, Active Lane Keeping Assist has initiated an emergency stop (→ page 295).



Indicator on the driver's display on the Assistance menu

If the front wheel of the vehicle drives over a detected lane marking, this will be highlighted red on the Assistance menu on the driver's display.

ⓘ **Vehicles with active ambient lighting:** If Warning Support is activated, the Active Lane Keeping Assist warning will also be accompanied by ambient lighting (→ page 211).

System limits

In the following situations, a lane-correcting steering intervention may not occur but rather a warning may be given on the steering wheel, depending on the situation:

- You clearly and actively steer, brake or accelerate.
- If a driving safety system intervenes, such as ESP®, Active Brake Assist or Active Blind Spot Assist.
- If you have adopted a sporty driving style with high cornering speeds or high rates of acceleration.

The system may be impaired or may not function particularly in the following situations:

- If there is poor visibility, e.g. due to insufficient illumination of the road, highly variable shade conditions, rain, snow, fog or heavy spray.
- If there is glare, e.g. from oncoming traffic, the sun or reflections.
- If there is dirt on the windshield in the vicinity of the multifunction camera or if the camera is fogged up, damaged or obscured.
- If there is dirt on the bumper in the area of the radar sensors, or if they are damaged or obscured.
- If there are no lane markings, or several unclear lane markings are present for one lane, e.g. around roadworks.
- If the lane markings are worn, dark or covered.
- If the distance to the vehicle in front is too short and thus the lane markings cannot be detected.
- If the lane markings change quickly, e.g. lanes branch off, cross one another or merge.

- If the road is very narrow and winding.

Observe the notes on driving systems and your responsibility; you may otherwise fail to recognize dangers (→ page 272).

Activating/deactivating Active Lane Keeping Assist

Multimedia system:

→ ⌂ ▸▸ Settings ▸▸ Assistance ▸▸ Collision Avoidance ▸▸ Active Lane Keeping Assist

▶ Activate or deactivate the function.

Alternatively, Active Lane Keeping Assist can be activated and deactivated via quick-access.

ⓘ After starting the vehicle, the settings are country-specific.

Setting Active Lane Keeping Assist

Multimedia system:

→ ⌂ ▸▸ Settings ▸▸ Assistance ▸▸ Collision Avoidance ▸▸ Active Lane Keeping Assist

Setting the sensitivity

▶ Select ☼.

▶ Select Early, Med. or Late.

The setting most recently selected will be adopted the next time the vehicle is started.

ⓘ The standard setting for this function is dependent on the country.

Activating or deactivating assistance with dashed lane markings

▶ Select Advanced Support.

The setting most recently selected will be adopted the next time the vehicle is started.

ⓘ The standard setting for this function is dependent on the country.

ⓘ This function must be activated in vehicles without the Driving Assistance Package for Emergency Stop Assist to be fully available. Further information on Emergency Stop Assist (→ page 295)

AIRMATIC

Function of AIRMATIC

AIRMATIC is an air suspension system with variable damping for improved driving comfort. The all-round level control system ensures the best possible suspension and constant ground clearance, even with a laden vehicle. When driving at speed, the vehicle is lowered automatically to improve driving safety and to reduce energy consumption. You also have the option of manually adjusting the vehicle level.

AIRMATIC includes the following components and functions:

- air suspension with automatic all-round level control
- ADS PLUS (Adaptive Damping System with constant adjustment of damping characteristics)

- speed-dependent lowering of the vehicle level
- increased vehicle level for greater ground clearance, selected via the multimedia system

Suspension setting and vehicle level per drive program

Drive program [C]:

- comfortable suspension setting
- adjusting the vehicle to normal level
- lowering the vehicle at speeds above approx. 75 mph (120 km/h) to low level -1
- raising the vehicle at speeds below approx. 50 mph (80 km/h) to normal level

Drive program [E]:

- comfortable suspension setting
- adjusting the vehicle to low level -1

Drive program [S]:

- firmer suspension setting
- adjusting the vehicle to low level -1

Setting the vehicle level

⚠ WARNING Risk of accident because vehicle level is too high

Driving characteristics may be impaired.

The vehicle can drift outwards, for example, when steering or cornering.

▶ Choose a vehicle level which is suited to the driving style and the road surface conditions.

⚠ WARNING Risk of becoming trapped due to the vehicle lowering

When lowering the vehicle, other people could become trapped if their limbs are between the vehicle body and the wheels or underneath the vehicle.

▶ Make sure nobody is underneath the vehicle or in the immediate vicinity of the wheel arches when you lower the vehicle.

⚠ WARNING Risk of becoming trapped due to the vehicle lowering

Vehicles with AIRMATIC or level control: when you unload luggage or leave the vehicle, the vehicle first rises slightly and then returns to the set level shortly afterwards.

You or anyone else in the vicinity of the wheel arches or the underbody could thus become trapped.

The vehicle can also be lowered after being locked.

▶ When leaving the vehicle, make sure that nobody is in the vicinity of the wheel arches or the underbody.

! NOTE Damage due to vehicle lowering

Parts of the body could be damaged when the vehicle is lowered.

▶ Make sure that there are no obstacles such as curbs underneath or in the immediate vicinity of the body when the vehicle is being lowered.

Requirements

- The vehicle has been started.
- Off-road level +1: the vehicle is not moving faster than 12 mph (20 km/h).
- When the trailer socket is contacted (trailer/bicycle rack): the vehicle is not moving faster than 19 mph (30 km/h).

Multimedia system:



Raising the vehicle

▶ Select .
The indicator lamp lights up continuously.

The vehicle is raised to off-road level +1.

Your selection is saved. The off-road level set remains stored even after the vehicle has been switched off.

The vehicle is lowered again in the following situations:

- Off-road level +1: when driving faster than 22 mph (35 km/h).
- When the trailer socket is contacted (trailer/bicycle rack): the vehicle is moving faster than 19 mph (30 km/h).

Lowering the vehicle

▶ Select .
The indicator lamp goes out.

The vehicle is lowered to normal level.

ⓘ In the Sport and Eco drive programs, only normal vehicle level is possible when the trailer socket is contacted (trailer/bicycle rack).

ⓘ During trailer operation use the normal level. Driving in the off-road level is not permitted during trailer operation on public roads.

Rear view camera

Function of the rear-view camera

The rear-view camera is only an aid. It is not a substitute for your attention to the surroundings. The responsibility for safe maneuvering and parking remains with you. Make sure that no persons, animals, objects etc. are in the maneuvering area while you are maneuvering and parking.

ⓘ The area behind the vehicle will be displayed as a mirror image, as in the inside rear-view mirror.

The following camera views are available on the central display:

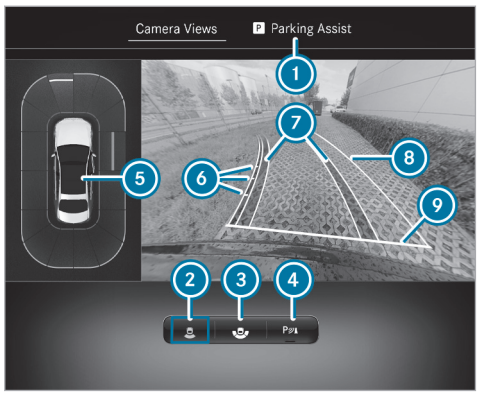

Camera Views menu (top view)

1 Parking Assistance menu

2 Rear-view camera with top view

3 Wide-angle view
4 Activating/deactivating Parking Assist PARKTRONIC (→ page 328)
5 Warning display of Parking Assist PARKTRONIC (→ page 325)
6 Guide lines at a distance of approximately 1.6 ft (0.5 m), 3.3 ft (1.0 m), 5 ft (1.5 m) and 9.9 ft (3.0 m) from the rear area
7 Lane marking the course the tires will take with the current steering movement (dynamic)
8 Area that will be driven over based on the current steering movement (dynamic)
9 Guide line at a distance of approximately 1.0 ft (0.3 m) from the rear area

ⓘ When Active Parking Assist is active, lane markings 7 will be displayed in green (→ page 329).

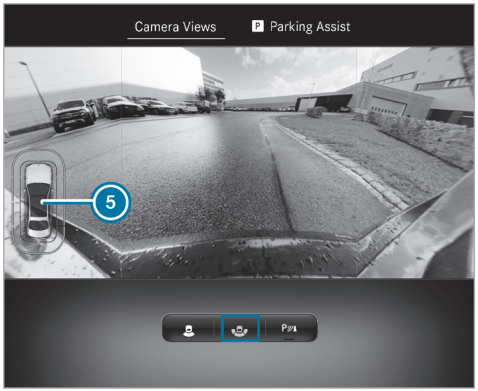

Wide-angle view
5 Warning display of Parking Assist PARKTRONIC (→ page 325)

System limits

If the system is not ready for operation, the System Inoperative message will appear on the central display.

The rear-view camera will not function or will function only partially in the following situations:

- You are driving forwards at a speed greater than approximately 10 mph (16 km/h).
- The trunk lid is open.
- The weather conditions are poor (e.g. heavy rain, snow, fog, storm or spray).
- The ambient light is poor (e.g. at night or if light is shining into the camera).
- The camera lens is obstructed, dirty or fogged up. Observe the notes on cleaning the rear-view camera (→ page 516).
- The camera or rear of your vehicle is damaged. In this case, have the camera and its position and setting checked at a qualified specialist workshop.

ⓘ Do not use the rear-view camera in these types of situations. You could otherwise injure others or collide with objects when parking the vehicle.

The field of vision and other functions of the camera system may be restricted due to additional

attachments on the vehicle (e.g. license plate bracket or bicycle rack).

ⓘ The contrast of the display may be impaired by direct sunlight or by other light sources (e.g. when you are driving out of a garage). In this case, pay particular attention.

ⓘ Have the display repaired or replaced if, for example, pixel errors considerably restrict its use.

Also observe the information on vehicle sensors and cameras (→ page 272).

360° camera

Function of the 360° camera

The 360° camera is a system that consists of four cameras which cover the immediate surroundings of the vehicle. The cameras assist you when you are parking, for example, or at exits with reduced visibility.

The 360° camera includes the following cameras and evaluates their images:

- Rear view camera
- Front camera
- Two outside mirror cameras

The cameras are only an aid and may show a distorted view of obstacles, show them incorrectly or not show them at all. They are not a substitute for your attention to the surroundings. The responsibility for safe maneuvering and parking remains with you. Make sure that there are no persons, animals or objects etc., in the maneuvering area while maneuvering and parking.

The following camera views are available on the central display:

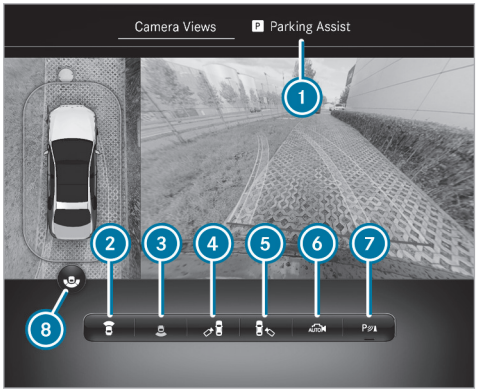

Camera Views menu overview

1. Menu Parking Assistance
2. Top view with image from the front camera
3. Top view with image from the rear view camera
4. 3D view, left-hand side of the vehicle
5. 3D view, right-hand side of the vehicle
6. 3D auto view

⑦ To activate/deactivate Parking Assist PARKTRONIC (→ page 328)

⑧ To switch between standard and wide-angle view

ⓘ In all views, the Parking Assist PARKTRONIC warning display is shown (→ page 325).

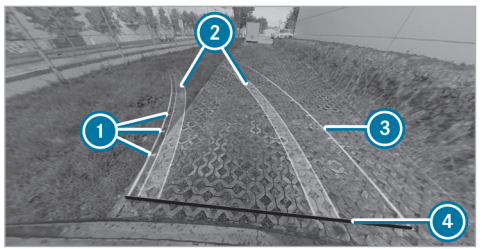

Function of the guide lines

① Guide lines at a distance of approximately 1.6 ft (0.5 m), 3.3 ft (1.0 m), 5 ft (1.5 m) and 9.9 ft (3.0 m) from the rear area

② Lane marking the course the tires will take with the current steering angle (dynamic)

③ Driven surface depending on the current steering angle (dynamic)

④ Guide line at a distance of approximately 1.0 ft (0.3 m) from the rear area

ⓘ When Active Parking Assist is active, lanes and guide lines are displayed in green instead of yellow (→ page 329).

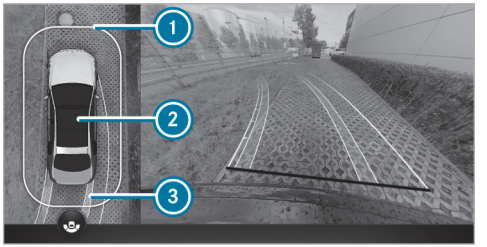

Top view with image from the front or rear view camera

① Warning display of Parking Assist PARKTRONIC (→ page 325)

② Your vehicle from above

③ Lane indicating the route the vehicle will take at the current steering angle

⚠ **WARNING** Risk of accidents due to objects not being displayed or being displayed in a distorted manner

Due to the projection of the cameras, objects in the 3D views may be strongly distorted or not displayed at all.

- Make sure that there are no persons, animals or objects etc., in the maneuvering area while maneuvering and parking.



3D view, left/right-hand side of the vehicle

1 Display of Parking Assist PARKTRONIC (→ page 325)

In the 3D view, left/right-hand side of the vehicle, the virtual camera moves to the respective side of the vehicle. When you change the transmission position, the view is automatically adapted.

ⓘ The area behind the vehicle is **not** displayed as a mirror image as is usual in the 3D views.

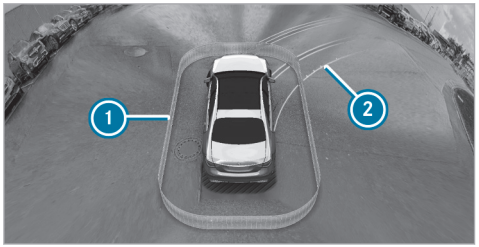

3D auto view

1 Display of Parking Assist PARKTRONIC (→ page 325)

2 Guide lines

In the 3D auto view, the virtual camera moves to the standard perspective, facing forward from the rear above the roof. The view changes automatically when approaching obstacles.

If you touch the touchscreen, the view changes to the 3D view with free rotation. You can turn, tilt and zoom the views by touch.



Wide-angle view

1 Display of Parking Assist PARKTRONIC (→ page 325)

2 To switch between standard and wide-angle view

System limits

If the system is not ready for operation, the System Inoperative message will appear on the central display.

WARNING Risk of accident due to restrictions in the function of the 360° camera

If the function of the 360° camera is restricted, there is a risk of collision with people or objects.

- Do not use the 360° camera in the event of function restrictions.
- Make sure that there are no persons, animals or objects etc., in the maneuvering area while maneuvering and parking.

The 360° camera will not function or will only partially function in the following situations:

- You are driving forwards at a speed greater than approximately 10 mph (16 km/h).
- The doors are open.
- An outside mirror is not completely folded out.
- The trunk lid is open.
- The weather conditions are poor, e.g. heavy rain, snow, fog, storm or spray.
- The ambient light is poor, e.g. at night or if light is shining into the camera.
- The camera lens is obstructed, dirty or fogged up. See the notes on cleaning the 360° camera (→ page 516).
- If cameras or vehicle components in which the cameras are installed are damaged. In this event, have the cameras, their positions and their setting checked at a qualified specialist workshop.

For technical reasons, the standard height of the vehicle may be altered if the vehicle is carrying a heavy load and can result in inaccuracies in the guide lines and in the display of the generated images.

The field of vision and other functions of the camera system may be restricted due to additional attachments on the vehicle, e.g. license plate bracket or bicycle rack.

ⓘ The contrast of the display may be impaired by abrupt, direct sunlight or by other light sources, e.g. when you are driving out of a garage. In this case, pay particular attention.

ⓘ Have the display repaired or replaced if, for example, pixel errors considerably restrict its use.

Also observe the information on vehicle sensors and cameras (→ page 272).

Calling up the 360° camera views using the button

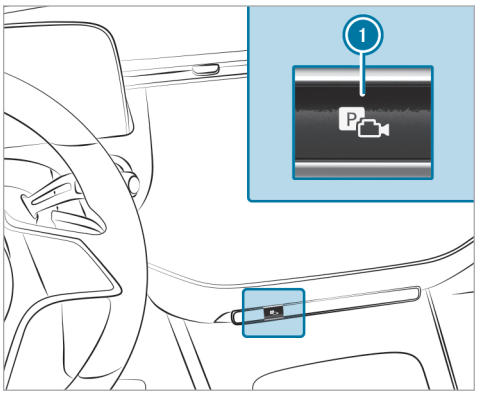

- Press button ①.
- Select Camera Views menu.
- Select the desired view in the multimedia system (→ page 321).

Selecting a view for the 360° camera (reverse gear)

- Engage reverse gear.
- Select the desired view in the multimedia system (→ page 321).

Opening the camera cover

Multimedia system:

↪ ⌂ ▸▸ Settings ▸▸ Assistance ▸▸ Camera

- Select Open Camera Cover.

ⓘ The camera cover closes automatically after some time or after the vehicle is switched on or off.

Parking Assist PARKTRONIC

Function of Parking Assist PARKTRONIC

Parking Assist PARKTRONIC is an electronic parking assistance system that monitors the area surrounding your vehicle and shows you the distance between the vehicle and a detected obstacle visually and audibly.

The passive side impact protection also warns you of obstacles to the side. These must be detected beforehand by the sensors in the front or rear bumper while you are driving by them. If you steer in the direction of a detected obstacle and there is a risk of a lateral collision, a warning is issued.

The passive side impact protection can be activated and deactivated via the multimedia system (→ page 329).

In order for front or rear obstacles to the side to be displayed, the vehicle must first travel a distance of at least half a vehicle length. Once the vehicle has traveled one vehicle length, obstacles on all sides can be shown.

Parking Assist PARKTRONIC is only an aid. It is not a substitute for your attention to the surroundings. The responsibility for safe maneuvering and parking remains with you. Make sure that there are no persons, animals or objects in the maneuvering area while maneuvering and parking in/exiting parking spaces.

Displays in the central display

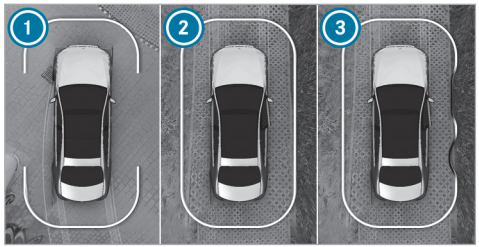

Vehicles with 360° camera

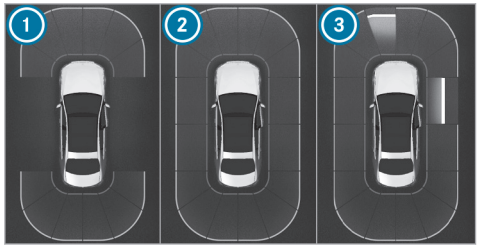

Vehicles with rear-view camera

1. Front and rear ready for display
2. All sides ready for display
3. All sides ready for display and obstacle detected

As soon as Parking Assist PARKTRONIC is ready for display, the respective areas 1 to 3 of the display are shown in blue.

The color of the display changes depending on the distance to the detected obstacle:

- **Blue:** > 3.3 ft (1 m) (no obstacles detected)
- **Yellow:** approximately 3.3 ft (1 m) - 2.3 ft (0.7 m)
- **Orange:** approximately 2.3 ft (0.7 m) - 1.3 ft (0.4 m)
- **Red:** <1.3 ft (0.4 m)

Vehicles with 360° camera: the boundary line shifts dynamically depending on the position and distance of the obstacles detected.

Depending on the distance to the obstacle detected, an intermittent warning tone also sounds. You can set the timing of the warnings in the multimedia system. In the Warn Early setting, the system warns you from a distance of 3.3 ft (1 m), in the standard setting only from 1.3 ft (0.4 m).



Vehicles with 360° camera



Vehicles with rear-view camera

If you are not in the Camera & Parking menu and an obstacle in the vehicle path is detected, pop-up window (1) appears on the central display if the following requirements are met:

- **Vehicles without Active Parking Assist:** when driving no faster than 8 mph (12 km/h).
- **Vehicles with Active Parking Assist:** when driving no faster than 11 mph (18 km/h).

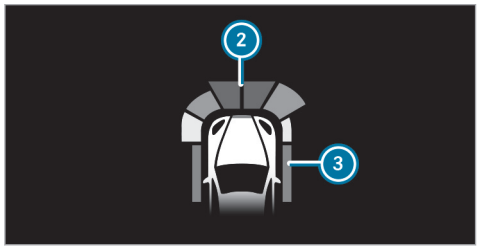

Optionally, obstacles detected by Parking Assist PARKTRONIC from a distance of approximately 3.3 ft (1.0 m) in front (2) and 2.3 ft (0.7 m) on the sides (3) can also be displayed on the head-up display.

Vehicles with active ambient lighting and Parking Package with remote parking functions

When Warning Support is activated, the Parking Assist PARKTRONIC display is also accompanied by ambient lighting. If an obstacle is detected, the ambient lighting lights up in the same color as the display in the central display.

The ambient lighting that accompanies the Parking Assist PARKTRONIC display is intended only to accentuate the display in the central display and does not replace it.

More information on ambient lighting:
(→ page 211)

ⓘ A display message for the ambient lighting does not occur in the area of the driver's display or in the rear passenger compartment.

ⓘ Depending on the selected setting, other functions may supersede the ambient lighting effects of Parking Assist PARKTRONIC. In this case, the ambient lighting effects of Parking Assist PARKTRONIC do not occur.

System limits

Parking Assist PARKTRONIC does not necessarily take into account the following obstacles:

- Obstacles below the detection area, e.g. persons, animals or objects.
- Obstacles above the detection area, e.g. projecting loads, overhangs or loading ramps on trucks.

- Pedestrians or animals approaching the vehicle from the side.
- Objects placed next to the vehicle

Obstacles on the sides are not shown in the following situations, for example:

- You park the vehicle and switch it off.
- You open the doors.

After the engine is restarted, obstacles must be detected again by driving past them before a new warning can be issued.

Also observe the system limits of the following systems:

- Rear-view camera (→ page 319)
- 360° camera (→ page 321)

Observe the information on vehicle sensors and cameras; otherwise the system cannot function properly (→ page 272).

Problems with Parking Assist PARKTRONIC

If the Parking Assist PARKTRONIC display lights up red for approximately three seconds then goes out, and the P OFF symbol appears on the driver's display, the system may have been deactivated due to signal interference. Start the vehicle again and check if Parking Assist PARKTRONIC is working at a different location.

If a warning tone also sounds, it may be due to one of the following causes:

- **The sensors are dirty:** clean the sensors (→ page 516).
- **Parking Assist PARKTRONIC has been deactivated due to a malfunction:** restart the vehicle. If the problem persists, consult a qualified specialist workshop.

Activating/deactivating Parking Assist PARKTRONIC

! **NOTE** Vehicle damage during parking or maneuvering due to objects at close range

Parking Assist PARKTRONIC may not detect certain objects close to the vehicle.

▶ When parking or maneuvering, look out in particular for objects that are underneath or above the sensors, e.g. flower pots or drawbars. Otherwise, the vehicle or other objects could be damaged.

Requirements

- The camera menu is open.
- Or: the PARKTRONIC pop-up window appears.

▶ Tap P on the central display.

If the indicator lamp is lit, Parking Assist PARKTRONIC is active. If the indicator lamp does not light up or the symbol P OFF is displayed, Parking Assist PARKTRONIC is not active.

ⓘ Parking Assist PARKTRONIC is automatically activated when the vehicle is started.

Alternatively, Parking Assist PARKTRONIC can be activated or deactivated in the quick access menu.

Setting the warning tones for Parking Assist PARKTRONIC

Multimedia system:

→ ⌂ ▸▸ Settings ▸▸ Assistance ▸▸ Parking ▸▸ PARKTRONIC

Setting warning tones

- Select Set Warning Tones.
- Set the desired level under Volume or Tone Pitch.

Activating/deactivating audio fadeout

- Select Audio Fadeout and switch Audio Fade for Warnings on/off.
  The volume of the current media source will be reduced when a Parking Assist PARKTRONIC warning tone is sounding.

or

- Select Audio Fadeout and switch Audio Fade-out When in R on/off.
  The volume of the currently media source will be reduced when reverse gear is engaged.

Setting warning times

- Select Time of Warning.
- Set the desired warning time for Front or Rear.
- Switch Side Warning on/off.

Active Parking Assist

Function of Active Parking Assist

Active Parking Assist is an electronic parking assistance system, which uses ultrasound with the assistance of the rear-view camera and 360° camera. When you are driving forwards at a speed of up to approximately 22 mph (35 km/h), the system will automatically measure parking spaces on both sides of the vehicle.

Active Parking Assist is only an aid. It is not a substitute for your attention to the surroundings. The responsibility for safe maneuvering and parking remains with you. Make sure that no persons, animals or objects etc. are in the maneuvering area.

Active Parking Assist offers the following functions:

Vehicles with rear-view camera

- Parking in parking spaces parallel to the road
- Backing up into parking spaces perpendicular to the road

Any parking space can be selected. The vehicle will be parked in reverse.

Vehicles with 360° camera

- Parking in parking spaces parallel to the road
- Parking in parking spaces perpendicular to the road (optionally either forwards or in reverse)
- Parking in parking spaces that can be detected as such only due to markings (at the roadside, for example)
- Exiting parking spaces if you have parked using Active Parking Assist

Any parking space can be selected. Depending on the location of the parking space, the parking direction (forwards or in reverse) can also be selected as desired.

If Active Parking Assist is available, the P message will appear on the driver's display. When the system detects parking spaces, ◁P▷ will appear.

The arrows show on which side of the road free parking spaces are located. These will then be shown on the central display.

When Active Parking Assist is activated, the turn signals will be activated based on the calculated path of your vehicle. When you are entering or exiting a parking space, the procedure will be assisted by acceleration, braking, steering and gear changes.

To start the parking procedure, press the [P] button (→ page 331).

Active Parking Assist will be canceled in the following situations:

- You press the [P] button again.
- You begin steering.
- You engage park position [P].
- You apply the electric parking brake.
- ESP® intervenes.
- You open the driver's door.

System limits

Active Parking Assist will not be available if the exterior lighting is malfunctioning.

Also observe the limits of the following systems:

- Rear-view camera (→ page 319)
- 360° camera (→ page 321)

Objects that are above or below the detection range of Active Parking Assist, e.g. protruding loads, overhangs or loading ramps of trucks or boundaries of parking spaces, will not be detected when the parking space is measured. These will also then not be taken into account when the parking procedure is calculated. In some circumstances, Active Parking Assist may therefore guide you into the parking space prematurely or brake too late.

Certain environmental conditions, such as snowfall or heavy rain, may lead to a parking space being measured inaccurately. Parking spaces that are partially occupied by trailer drawbars might not be identified as such or be measured incorrectly. Use Active Parking Assist only on level, high-grip ground.

⚠ WARNING Risk of accident due to objects located above or below the detection range of Active Parking Assist

If there are objects above or below the detection range, the following situations may arise:

- Active Parking Assist may steer too early.
- The vehicle may not stop in front of these objects.

There is a danger of collision!

▶ In these situations, do not use Active Parking Assist.

Active Parking Assist can also display unsuitable parking spaces, e.g. parking spaces in which parking is not permitted or parking spaces on unsuitable surfaces.

Do not use Active Parking Assist in the following situations:

- In extreme weather conditions such as ice, packed snow or in heavy rain.
- When transporting a load that protrudes beyond the vehicle.

- If the parking space is on a steep incline.
- When snow chains are installed.
- Directly after a tire change or when spare tires are installed.
- If the tire pressure is too low or too high.
- On steep inclines of more than approximately 15%.
- If the vehicle level is out of alignment, e.g. after bottoming out on a curb (vehicles with level control)

You can watch an animation on this topic via the following link:

Parking with Active Parking Assist

WARNING Risk of accident due to objects located above or below the detection range of Active Parking Assist

If there are objects above or below the detection range, the following situations may arise:

- Active Parking Assist may steer too early.
- The vehicle may not stop in front of these objects.

There is a danger of collision!

▶ In these situations, do not use Active Parking Assist.

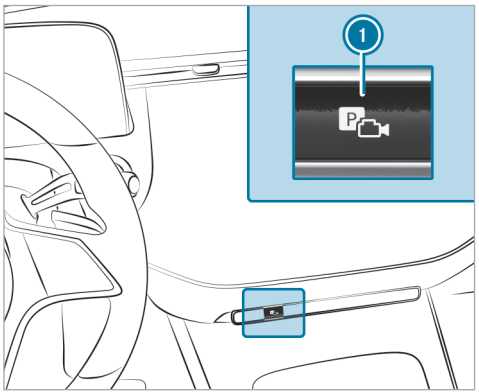

▶ Press button 1.

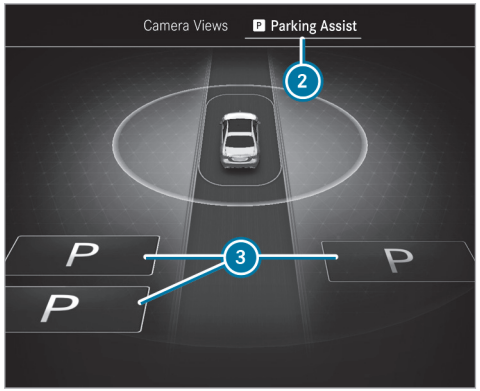

Parking assistance menu (example)

▶ Select the 2 Parking Assistance menu.

Parking spaces 3 detected by the system will be shown on the central display.

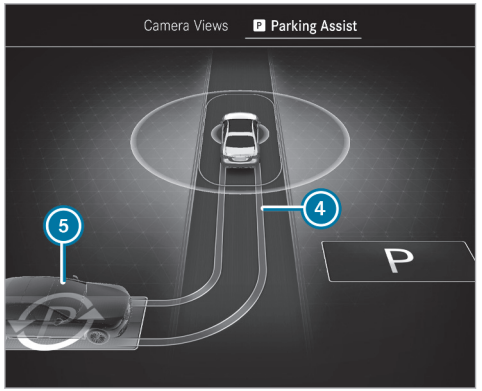

Parking assistance menu (example)

When the vehicle is stationary, indicated vehicle path (4) into currently selected parking space (5) will also appear.

- If a parking space is displayed: stop the vehicle.
- If necessary, select another parking space.
- **Vehicles with 360° camera:** to change the parking direction, tap the selected parking space again.
- **To start the parking procedure:** press button (1) again.

or

- Depress the brake pedal and press Start parking on the central display of the MBUX multimedia system.
- Take your hands off the steering wheel.
The vehicle will drive into the selected parking space.

The turn signal indicator will be switched on automatically when the parking procedure begins. You are responsible for selecting the turn signal indicator in accordance with the traffic conditions. If necessary, select the turn signal indicator accordingly.

WARNING Risk of accident due to vehicle swinging out while parking or pulling out of a parking space

While parking or exiting a parking space, the vehicle swings out and can drive onto areas of the oncoming lane.

This could cause you to collide with objects or other road users.

- Pay attention to objects and other road users.
- Where necessary, stop the vehicle or cancel the parking procedure with Active Parking Assist.

On completion of the parking procedure, a display message reading Active Parking Assist Finished will appear.

- Secure the vehicle against rolling away. When required by legal requirements or local conditions: turn the wheels towards the curb.

ⓘ You can stop the vehicle and change the transmission position during the parking procedure. The system will then calculate a new vehicle path. If no new vehicle path is available, the transmission position can be changed again or the process can be canceled.



Immediate parking via the Camera Views menu

- Select the Camera Views menu.
- When the vehicle is stationary and in transmission position R, and symbol 6 appears on the camera image: press button 1 again. The parking procedure will be initiated for the detected parking space.

ⓘ The parking space and parking direction cannot be changed in the case of immediate parking.

Exiting a parking space with Active Parking Assist

⚠ **WARNING** Risk of accident due to objects located above or below the detection range of Active Parking Assist

If there are objects above or below the detection range, the following situations may arise:

- Active Parking Assist may steer too early.
- The vehicle may not stop in front of these objects.

There is a danger of collision!

- In these situations, do not use Active Parking Assist.

Requirements

- The vehicle is equipped with a 360° camera.
- The vehicle has been parked with Active Parking Assist.

- Start the vehicle.

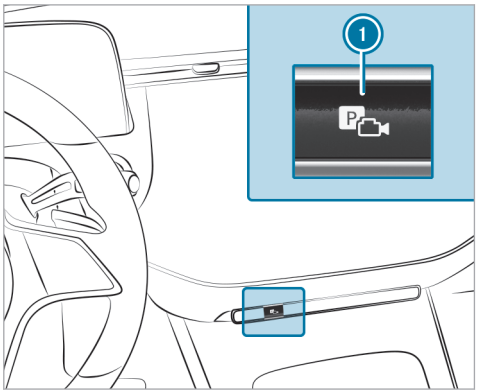

- Press button 1.

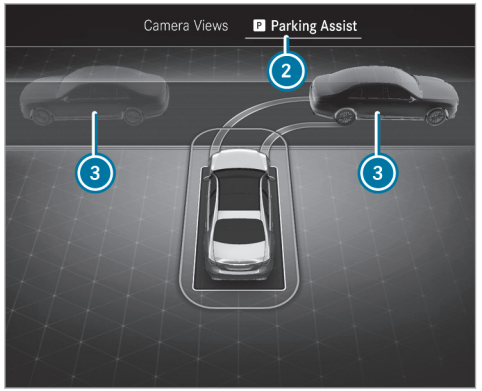

Parking assistance menu (example)

- Select the Parking Assistance (2) menu.
- If necessary, change your direction of exit (3).
- **To start exiting the parking space:** press button (1) again.

or

- Depress the brake pedal and press Start parking on the central display of the MBUX multimedia system.
- If necessary, change the transmission position. Observe any messages displayed on the driver's display and central display.

The vehicle will move out of the parking space.

The turn signal indicator will automatically be switched on when the process of exiting a parking space begins and switched off when it is completed. You are responsible for selecting the turn signal indicator in accordance with the traffic conditions. If necessary, select the turn signal indicator accordingly.

⚠ **WARNING** Risk of accident due to vehicle swinging out while parking or pulling out of a parking space

While parking or exiting a parking space, the vehicle swings out and can drive onto areas of the oncoming lane.

This could cause you to collide with objects or other road users.

- Pay attention to objects and other road users.
- Where necessary, stop the vehicle or cancel the parking procedure with Active Parking Assist.

After the parking space has been exited, a warning tone and the Active Parking Assist Finished: Take Control of Vehicle message will prompt you to take control of the vehicle. You will need to accelerate, brake, steer and change gear yourself again.

If you do not react to the prompt to take control of the vehicle, the system will apply the brakes to bring the vehicle to a standstill.

Pausing Active Parking Assist

WARNING Risk of accident due to objects located above or below the detection range of Active Parking Assist

If there are objects above or below the detection range, the following situations may arise:

- Active Parking Assist may steer too early.
- The vehicle may not stop in front of these objects.

There is a danger of collision!

- In these situations, do not use Active Parking Assist.

You can interrupt the parking or exiting procedure of Active Parking Assist by performing one of the following actions, forexample:

- Depress the brake pedal.
- Open the front passenger door, a rear door, the trunk or the hood.
- Apply the electric parking brake or activating the HOLD function.
- **To resume the parking or exiting procedure:** gently depress the accelerator pedal.

If the electric parking brake was applied before Active Parking Assist was activated, depress the accelerator pedal lightly to start the parking or exiting procedure.

Check the area around your vehicle again before resuming a paused parking procedure. Check again that there are no persons, animals or objects in the maneuvering range. Also observe the system limitations of Active Parking Assist.

Automatic braking function of Active Parking Assist

WARNING Risk of accident due to objects located above or below the detection range of Active Parking Assist

If there are objects above or below the detection range, the following situations may arise:

- Active Parking Assist may steer too early.
- The vehicle may not stop in front of these objects.

There is a danger of collision!

- In these situations, do not use Active Parking Assist.

Persons or objects detected in the maneuvering range could cause the vehicle to brake sharply and interrupt the parking or exiting procedure. The vehicle will then be held at a standstill. If you depress the accelerator pedal, the parking or exiting procedure is resumed.

Check the area around your vehicle again before resuming the parking or exiting procedure. Check again that there are no persons, animals or objects in the maneuvering range. Also observe the system limitations of Active Parking Assist.

Remote Parking Assist

Function of Remote Parking Assist

Remote Parking Assist is an additional function of Active Parking Assist. Comply with local traffic laws and regulations when using Remote Parking Assist on public roads.
If it is required to turn the wheels toward the curb, you cannot use Remote Parking Assist.

Please note that you can use Remote Parking Assist only if you have a valid driving license and are in a fit state to drive.

Remote Parking Assist parks your vehicle or exits the parking space while you are outside of your vehicle. You can monitor the maneuvering and parking procedure on your mobile phone.

With Remote Parking Assist, you can carry out all the parking procedures of Active Parking Assist. You can also position the vehicle directly in front of a garage or a driveway entrance and then use Remote Parking Assist to enter or exit a parking space.

Remote Parking Assist manages pulling away, braking and steering. While Remote Parking Assist is active, the vehicle is locked.

Remote Parking Assist is only an aid. It is not a substitute for your attention to the surroundings. Responsibility for safe maneuvering and parking remains with you. Interrupt or terminate the parking procedure if necessary. Make sure that there are no persons, animals, objects, etc. in the maneuvering range. Make sure to also pay attention to other vehicles.

System limits

If the system detects a malfunction or a system limit during the maneuvering or parking procedure, the procedure will be canceled:

- The vehicle is brought to a standstill.
- Transmission position P is selected and the electric parking brake is applied automatically.
- The vehicle is switched off.
- The vehicle remains locked.

If the parking maneuver is canceled, a corresponding message is displayed on the mobile phone.

Depending on the situation, you can then take control of the procedure, maneuver the vehicle back to the starting position or manually take control of the vehicle.

The system limits of Active Parking Assist apply (→ page 329).

Certain environmental conditions, suchas snowfall or heavy rain, may lead to a parking space being measured inaccurately or to connection problems with the mobile phone. Use Remote Parking Assist only on level, high-grip ground.

During the parking procedure, you should not stand more than approx. 10 ft (3.0 m) away from the vehicle. At greater distances, the procedure will be interrupted and a corresponding message will be displayed on the mobile phone. If you move closer to the vehicle, you will be able to continue the procedure.

You can watch an animation on this topic via the following link:

Operating Remote Parking Assist

Requirements

For the Remote Parking Assist function, you require:

- a Mercedes me user account
- the current Remote Parking Assist app for your vehicle type
- a mobile phone

ⓘ A list of compatible phones can be found at: https://www.mercedes-benz-mobile.com/

The following operating systems are supported:

- Android™

- Apple® iOS

WARNING Risk of accident due to objects located above or below the detection range of Active Parking Assist

If there are objects above or below the detection range, the following situations may arise:

- Active Parking Assist may steer too early.
- The vehicle may not stop in front of these objects.

There is a danger of collision!

- In these situations, do not use Active Parking Assist.

Objects located above the detection range of Active Parking Assist will not be detected when the parking space is measured. These will not be taken into account when the parking procedure is calculated (e.g. overhanging loads, overhangs or loading ramps of goods vehicles). In some circumstances, Active Parking Assist may therefore guide you into the parking space prematurely.

WARNING Danger due to insufficient view of the vehicle surroundings

If you maneuver, park or exit a parking space with the vehicle using Remote Parking Assist, observe the following:

- Make sure that you have the best view possible of the vehicle and the vehicle's surroundings.
- Make sure that no persons, animals or objects are in the path of your vehicle.
- Make sure that you maintain a suitable distance to the vehicle and that neither you nor other road users could be endangered.
- Be aware of the vehicle's surroundings at all times and identify possible dangers.
- If necessary, cancel the parking procedure.

No persons or pets are permitted to remain in the vehicle during the parking procedure. Observe the system limits at all times. If necessary, cancel the parking procedure. Always ensure that vehicle access by other road users is maintained.

- Activate the "Remote Parking Assist" service e.g. via the Mercedes me homepage.
- Authorize the mobile phone using the Remote Parking Assist app in the vehicle (→ page 339).

Selecting the parking maneuver in advance while inside the vehicle

- Stop the vehicle and engage transmission position P.

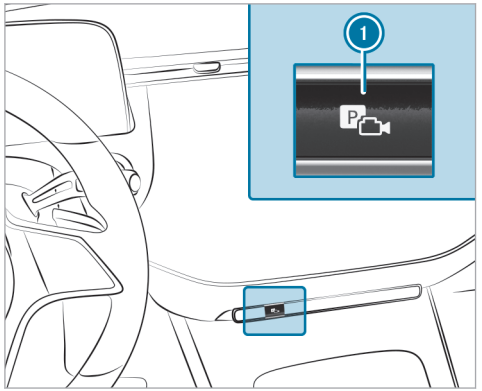

▶ Press button 1.

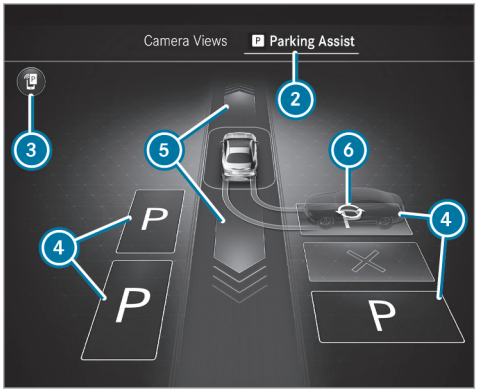

▶ Select the 2 Parking Assistance menu.

▶ For further information on Remote Parking Assist: select 3.

▶ If necessary, select another parking space 4 or select 5 to drive straight ahead (e.g. into a garage).

▶ If necessary, change parking direction 6.

ⓘ Alternatively, you can begin parking with Active Parking Assist (→ page 331) and continue with the Remote Parking Assist from any vehicle position. To do this, stop the parking process and engage transmission position P.

▶ Switch off the vehicle and exit it, taking the key with you.

Starting the parking procedure without selecting in advance

▶ Stop the vehicle and engage transmission position P.

▶ Switch off the vehicle and exit it, taking the key with you.

Starting the parking procedure while outside the vehicle

▶ Unlock the vehicle.

Performing a parking procedure with Remote Parking Assist

ⓘ Keep the vehicle key with you during the parking procedure. You can cancel the parking procedure and bring the vehicle to a standstill by pressing a button on the key.

ⓘ On completion of the parking procedure, the vehicle will be locked.

If you have started the parking procedure as described above, the vehicle will be ready to connect to your mobile phone for a limited time.

- Start the Remote Parking Assist app on your mobile phone and connect to the vehicle.
- Follow the instructions of the Remote Parking Assist app.

ⓘ The turn signal indicator will automatically be switched on when the parking procedure starts and switched off when it is complete.

ⓘ If the connection between the vehicle and the mobile phone is interrupted while a parking maneuver is being performed, the maneuver can be continued if the connection is re-established within a short time.

⚠ **WARNING** Risk of accident due to vehicle swinging out while parking or pulling out of a parking space

While parking or pulling out of a parking space, the vehicle swings out and can drive onto areas of the oncoming lane.

This could cause you to collide with objects or other road users.

- Pay attention to objects and other road users.
- Where necessary, stop the vehicle or cancel the parking procedure with Remote Parking Assist.

- After ending the parking procedure, ensure that all vehicle doors, windows and the trunk are closed. Secure the vehicle against rolling away.

Canceling the parking procedure

You can cancel the parking procedure of Remote Parking Assist at any time and bring the vehicle to a standstill.

- Cancel the parking procedure in the Remote Parking Assist App.

or

- Press a button on the vehicle key.

or

- Pull a door handle.

Authorizing/de-authorizing a mobile phone for Remote Parking Assist

Multimedia system:

→ ⌂ ▸▸ Settings ▸▸ Assistance ▸▸ Parking

Authorizing a new mobile phone

In order to be able to use the Remote Parking Assist function, you must authorize your mobile phone. You can authorize up to ten mobile phones.

- Select Remote Parking Assist.
- Select Authorize a New Device.
  Remote Parking Assist is ready to connect.

- ▶ Start the Remote Parking Assist App and additionally start the authorization process.
  A connection prompt will be displayed.
- ▶ Scan the QR code on the central display.
  The mobile phone will be authorized.

De-authorizing mobile phones

- ▶ Select Remote Parking Assist.
- ▶ Select Deauthorize Devices.
- ▶ **To de-authorize a mobile phone:** select a mobile phone.
  The mobile phone will be deleted from the device list.
- ▶ **To de-authorize all mobile phones:** selectDeauthorize All Devices.
  All mobile phones will be deleted from the device list.

Maneuvering assistance

Function of Drive Away Assist

Drive Away Assist can reduce the severity of an impact when the vehicle is pulling away. If the system detects an obstacle in the direction of travel, the vehicle's speed will briefly be reduced to approximately 1 mph (2 km/h).

A risk of a collision may arise in the following situations, for example:

- If the driver mixes up the accelerator and brake pedals.
- If the driver engages an incorrect gear.
- If the driver depresses the accelerator pedal with too much force.

Drive Away Assist will be active under the following conditions:

- If the vehicle was stationary and the transmission position was changed to R or D.
- If the vehicle has rolled less than approximately 3.3 ft (1.0 m) since being at a standstill.
- If the detected obstacle is less than approximately 3.3 ft (1.0 m) away.

The Drive-away Assist can be deactivated or activated on the Maneuvering Assistance menu (→ page 342).

If a critical situation is detected, the symbol will appear in red in the selected view on the Camera & Parking menu.

ⓘ If Drive Away Assist is not available, the symbol will appear in grey. If the Camera & Parking menu is not opened on the central display, the symbol and pop-up of Parking Assist PARKTRONIC will both appear.

Drive Away Assist is only an aid. It is not a substitute for your attention to the surroundings. The responsibility for safe maneuvering and parking remains with you. Make sure that no persons, animals, objects etc. are in the maneuvering area.

⚠ **WARNING** Risk of accident caused by limited detection performance of Drive Away Assist

Drive Away Assist cannot always clearly identify objects and traffic situations.

- ▶ Always pay careful attention to the traffic situation; do not rely on Drive Away Assist alone.
- ▶ Be prepared to brake or swerve as necessary, provided the traffic situation per-

mits and that it is safe to take evasive action.

System limits

The system limits of Active Parking Assist apply (→ page 329).

The performance of Drive Away Assist will be restricted on uphill gradients.

Cross traffic warning function

The cross traffic warning can warn you of crossing traffic when you are exiting a parking space. The radar sensors in the bumper also monitor the area adjacent to the vehicle.

The cross traffic warning will be active in the following circumstances:

- Warning for Cross Traffic, Rear: the vehicle is backing up at a speed slower than approximately 6 mph (10 km/h).
- Warning for Cross Traffic, Front: the vehicle is driving forwards at a speed slower than approximately 6 mph (10 km/h) and the camera image is shown on the central display (→ page 324).

The Warning for Cross Traffic, Front can be deactivated or activated on the Maneuvering Assistance(→ page 342) menu.

If a critical situation is detected, the symbol will appear in red in the selected view on the Camera & Parking menu.

Warning for Cross Traffic, Rear

- The vehicle brakes can be applied automatically when crossing traffic is detected.
- If the Camera & Parking menu is not open and a critical situation is detected, a warning will appear on the central display together with the PARKTRONIC Parking Assist pop-up.

Warning for Cross Traffic, Front

- If Active Parking Assist is active, the vehicle brakes can be applied automatically when crossing traffic is detected.
- If Active Parking Assist is not active but the Camera & Parking menu is open, a warning will appear.
- If the Camera & Parking menu is not open, the system will not be able to react to crossing traffic.

The cross traffic warning is only an aid and not a substitute for your attention to the surroundings. The responsibility for safe maneuvering and parking remains with you. Make sure that no persons, animals, objects etc. are in the maneuvering area.

WARNING Risk of accident caused by limited detection performance of the cross traffic warning

The cross traffic warning cannot always clearly identify objects and traffic situations.

- Always pay careful attention to the traffic situation; do not rely on the cross traffic warning alone.
- Be prepared to brake or swerve as necessary, provided the traffic situation permits and that it is safe to take evasive action.

System limits

ⓘ If the cross traffic warning is not available, the symbol will appear in grey.

The system limits of Active Parking Assist apply (→ page 329).

If the radar sensors are obstructed by vehicles or other objects, detection will not be possible.

The cross traffic warning will not be available in the following situations:

- On inclines

Close-range braking function

The close-range braking function can prevent collisions with pedestrians when the vehicle is backing up at slow speeds. If the rear-view camera detects a person in the vehicle's path, the brakes can be applied to bring the vehicle to a standstill.

The close-range braking function may intervene in the following circumstances:

- The vehicle is backing up at a speed slower than 6 mph (10 km/h).
- The camera image is shown on the central display (→ page 324).

Close-range braking can be deactivated or activated on the Maneuvering Assistance menu (depending on the country) (→ page 342).

If the close-range braking function is triggered, the symbol will appear in red in the selected view on the Camera & Parking menu.

ⓘ If close-range braking is not available, the symbol will appear in grey.

The close-range braking function is only an aid. It is not a substitute for your attention to the surroundings. The responsibility for safe maneuvering and parking remains with you. Make sure that no persons, animals, objects etc. are in the maneuvering area.

⚠ **WARNING** Risk of accident caused by limited detection by the maneuvering brake function

The maneuvering brake function cannot always clearly detect people. Other obstacles are not detected by the function.

In these cases, the function may brake unnecessarily or not brake at all.

▶ Always pay careful attention to the traffic situation; do not rely on the maneuvering brake function alone.

▶ Be ready to brake.

System limits

Observe the system limits of the following functions:

- Active Parking Assist (→ page 329)
- 360° camera (→ page 321)
- Rear-view camera (→ page 319)

The close-range braking function will not be available in the following situations:

- On inclines

Activating or deactivating Parking Assist

Multimedia system:

→ ⌂ ▸▸ Settings ▸▸ Assistance ▸▸ Parking

ⓘ This function is an on-demand feature (→ page 81).

▶ Select Parking Assist.

▶ Activate or deactivate the desired Parking Assist.

Memory Parking Assist

Function of Memory Parking Assist

Memory Parking Assist can park your vehicle in a previously stored parking space. You can store parking procedures with a total distance of up to 550 yds (500 m) (110 yds (100 m) per parking or exiting procedure).

During parking or exiting, the system can travel a previously stored path of up to approximately 110 yds (100 m) to or out of the desired parking space, for example, from the driveway entrance into the garage.

Within a radius of approx. 165 yds (150 m), only one parking or exiting procedure can be recorded.

Only use Memory Parking Assist on private property. Use on public roads, e.g. in public parking spaces, is not permitted.

Memory Parking Assist is only an aid. It is not a substitute for your attention to the surroundings. The responsibility for safe maneuvering and parking remains with you. Make sure that no persons, animals or objects etc. are in the vehicle path.

System limits

Observe the system limitations of Active Parking Assist (→ page 329).

⚠ **WARNING** Risk of accident due to objects located above or below the detection range of Memory Parking Assist

If there are objects above or below the detection range, the following situations may arise:

- Memory Parking Assist may steer too early.
- The vehicle may not stop in front of these objects.

This result in a collision.

▶ In these situations, do not use Memory Parking Assist.

Objects located above or below the detection range of Memory Parking Assist may not be detected during the parking procedure.

Objects including drawbars of parked trailers that protrude into the parking space may not be detected.

Do not use Memory Parking Assist in the following situations, for example:

- In extreme weather conditions such as ice, packed snow or in heavy rain.
- When transporting a load that protrudes beyond the vehicle.
- If the parking space is on a steep downhill or uphill gradient.
- When snow chains are installed.

You can watch an animation on this topic via the following link:

Recording a parking procedure using Memory Parking Assist

Requirements

- The entire route is, for example, within the bounds of your own property and not on public roads.
- The system needs reference points in the surroundings to orient itself, such as fences, walls or trees. Therefore, after you start the vehicle, you will need to drive for a certain distance first. If not enough reference points are

detected in the surrounding area, no new route can be recorded.

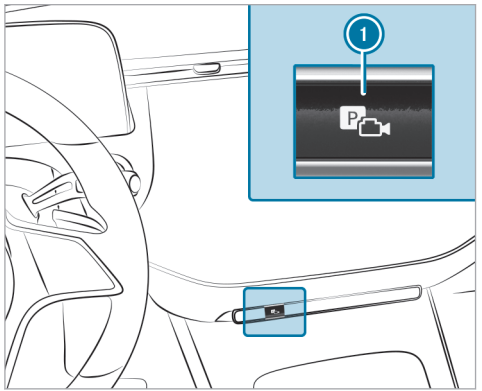

▶ Press button 1.
The Camera & Parking view will open on the central display.

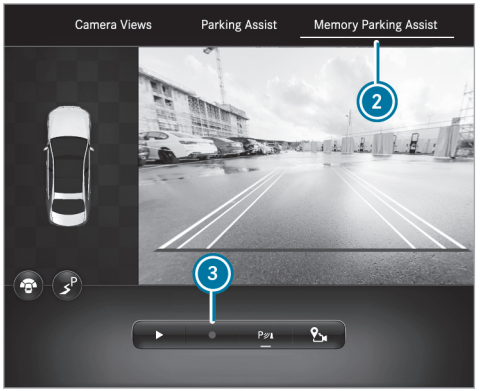

▶ Select menu 2 Memory Parking Assist.
▶ Brake the vehicle to a standstill at the desired starting point of the assisted parking procedure, e.g. a driveway entrance.
▶ **To start recording:** tap on 3.

ⓘ If not all conditions for a recording are met, symbol 3 will be greyed out.

▶ Park the vehicle in the desired parking space. Do not exceed 5 mph (8 km/h).
▶ **To stop recording:** stop the vehicle and tap on 3 again.
The recording will be stored.

ⓘ You can delete and rename stored parking procedures in the Memory Parking Assist settings.

Parking with Memory Parking Assist

Requirements

- A parking procedure has been recorded.

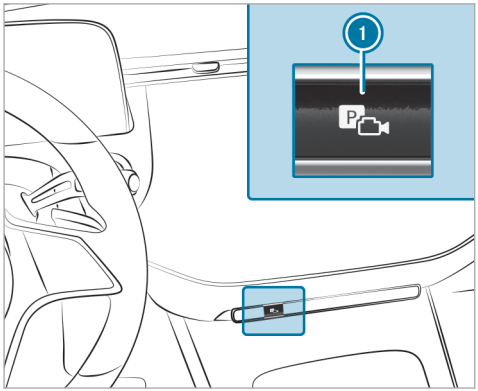

- Press button (1).
  The Camera & Parking view will open on the central display.



- Select menu Memory Parking Assist (2).
- Brake the vehicle to a standstill at the starting point of the stored parking procedure.
- **To start the parking procedure:** press [▶].
- Select the stored parking procedure from the list.
- Follow the instructions on the central display. The vehicle will drive into the selected parking space.

ⓘ The turn signal indicator will not be switched on automatically. You are responsible for engaging the turn signal indicator in accordance with the traffic conditions.

- Once the parking procedure is complete, safeguard the vehicle against rolling away.

Exiting a parking space with Memory Parking Assist

Requirements

- The exiting procedure was recorded together with the respective parking procedure and stored separately within one driving cycle.
- The vehicle was parked using Memory Parking Assist.

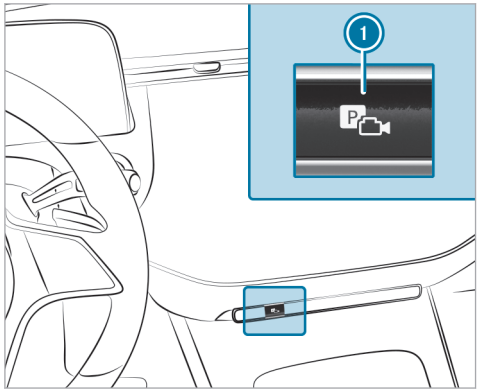

- Press button (1).
  The Camera & Parking view will open on the central display.



- Select the Memory Parking Assist menu (2).

Starting the exiting procedure

- Press [▶].
- Confirm the saved exiting procedure.
- Follow the instructions on the central display.
  The vehicle will drive the recorded route.

ⓘ The turn signal indicator will not be switched on automatically. You are responsible for engaging the turn signal indicator in accordance with the traffic conditions.

- Take control of the vehicle after the exiting procedure has been completed.

Setting Memory Parking Assist

Multimedia system:

→ [⌂] ▸▸ Settings ▸▸ Assistance ▸▸ Parking ▸▸ Memory Parking Assist

Renaming a recording

- Select Manage Tracks.
- Select [•••] next to the desired recording.
- Enter a name and confirm with OK.

Deleting a recording

- Select Manage Tracks.
- Select [•••] next to the desired recording.
- Select Delete Entry.

Deleting all recordings

- Select Manage Tracks.

▶ ••• button next to one of the desired recordings.

▶ Select Delete All.

ⓘ Alternatively, you can delete all data in Memory Parking Assist by resetting the multimedia system (→ page 404).

Vehicle towing instructions

The vehicle is not suitable for the use of tow bar systems that are used for flat towing or dinghy towing, for example. Attaching and using tow bar systems can result in damage to the vehicle. When you are towing a vehicle with tow bar systems, safe driving characteristics cannot be guaranteed for the towing vehicle or the towed vehicle. The vehicle-trailer combination may swerve from side to side.

Observe the following information:

- Permitted towing methods (→ page 534)
- The notes on towing with both axles on the ground (→ page 53)

Notes on the driver display

WARNING Risk of accident if the driver display fails

If the driver display has failed or is malfunctioning, function restrictions in systems relevant to safety cannot be detected.

The operating safety of your vehicle may be impaired.

- Drive on carefully.
- Have the vehicle checked immediately at a qualified specialist workshop.

If the operating safety of your vehicle is impaired, park the vehicle immediately and safely. Contact a qualified specialist workshop.

The driver display shows the following basic information:

- Speed and engine speeds
- Fuel level and coolant temperature
- Indicator and warning lamps

Additional functions available include the following:

- Different menus, e.g. for assistance and navigation
- Status displays for the driving systems
- Display messages
- Information on speed, Consumption and range

Some menu content and settings can be customized (→ page 350).

Notes on the 3D driver display

WARNING Risk of accident if the driver display fails

If the driver display has failed or is malfunctioning, function restrictions in systems relevant to safety cannot be detected.

The operating safety of your vehicle may be impaired.

- Drive on carefully.
- Have the vehicle checked immediately at a qualified specialist workshop.

If the operating safety of your vehicle is impaired, park the vehicle immediately and safely. Contact a qualified specialist workshop.

The 3D driver's display enables a three-dimensional representation of the content of the driver's display. This requires the driver to be recorded by the driver camera.

The system may be impaired or may not function in the following situations:

- The driver camera is deactivated or is not working.
- The driver is outside the detection range of the driver camera.
- The operating conditions are not in place, e.g. if the outside temperature is too low or too high.

Operating the driver display

WARNING Risk of distraction from information systems and communications equipment

If you operate information systems and communication devices integrated in the vehicle when driving, you could be distracted from the traffic situation. This could also cause you to lose control of the vehicle.

- Only operate this equipment when the traffic situation permits.
- If you cannot be sure of this, stop the vehicle whilst paying attention to road and traffic conditions and operate the equipment with the vehicle stationary.

Observe the legal requirements for the country in which you are currently driving when operating the driver display.

Scrolling on the menu bar

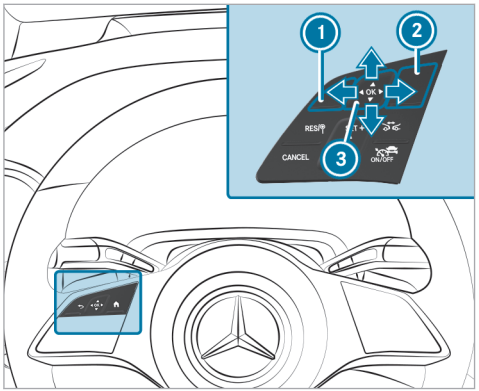

1 Back button
2 Main menu button
3 Touch Control

The content on the driver display is controlled using the control elements on the left side of the steering wheel. You can use Touch Control 3 to navigate vertically and horizontally by swiping with one finger. Confirm the selection by pressing the Touch Control.

ⓘ To operate Touch Control 3 in the most effective way, use the tip of your thumb if possible. You can also set the sensitivity of Touch Control on the central display (→ page 378).

- Briefly press main menu button 2.
- Select a menu by swiping to the left or right on Touch Control 3.
- **To confirm:** press Touch Control 3.

You can watch an animation on this topic via the following link:

Driver display menus

Notes on menus on the driver's display

WARNING Risk of distraction from information systems and communications equipment

If you operate information systems and communication devices integrated in the vehicle

when driving, you could be distracted from the traffic situation. This could also cause you to lose control of the vehicle.

- ▶ Only operate this equipment when the traffic situation permits.
- ▶ If you cannot be sure of this, stop the vehicle whilst paying attention to road and traffic conditions and operate the equipment with the vehicle stationary.

Observe the legal requirements for the country in which you are currently driving when operating the driver's display.

The following menus can be called up via the menu bar on the driver's display:

- Sport
- Classic
- Navigation
- Assistance
- Offroad (equipment-dependent)
- Service

On some of these menus, you can choose between different display content on the center display area.

On most of the menus, you can use Options to configure further settings for the menu-specific display content.

You can watch an animation on this topic via the following link:

Calling up and operating menus on the driver display

Calling up a menu via the driver display menu bar

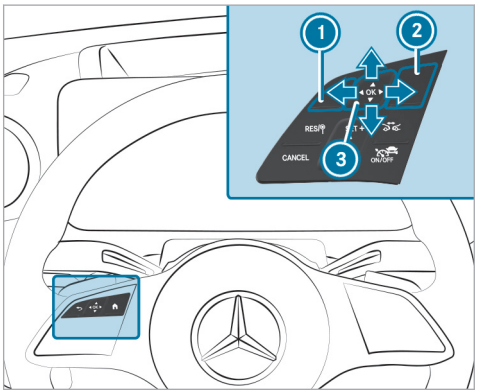

1. Back button
2. Main menu button
3. Touch Control

- Press main menu button (2) on the steering wheel.
  The driver display menu bar will open.



Vehicles with combustion engines

- Swipe to the left or right on left-hand Touch Control (3) and select a menu (e.g. the Classic menu) on the menu bar.
- **To confirm:** press left-hand Touch Control (3).

Calling up or exiting the **Options** submenu

- **To call up:** press left-hand Touch Control (3).
- **To exit:** press back button (1).

Browsing through display content or lists

- Swipe up, down, left or right on left-hand Touch Control (3).

ⓘ Within different menus, icons will also appear at the right edge of the center display section to indicate the current position on a list.

Setting display content as the standard display

You can set custom-configured menu display content as the standard display.

- Press and hold left-hand Touch Control (3) until the bar display that appears is completely filled.
  The Set Shortcut? prompt will appear.
- Swipe left on left-hand Touch Control (3) and select Yes.
- **To confirm:** press left-hand Touch Control (3).
- **To call up standard displays:** press back button (1) on the upper level of a menu.

ⓘ Pressing back button (1) on the standard display will call up the previous menu.

Resetting values

- **To call up the Options submenu:** press left-hand Touch Control (3).
- Select Yes.
- **To confirm:** press left-hand Touch Control (3).

Configuring settings in the Classic menu

Driver's display:
↪ Classic

Selecting display content in the center display area of the **Classic** menu

- Call up the Classic menu via the driver's display menu bar.
- **To select display content:** swipe upwards or downwards on the left-hand Touch Control and select the desired display content.

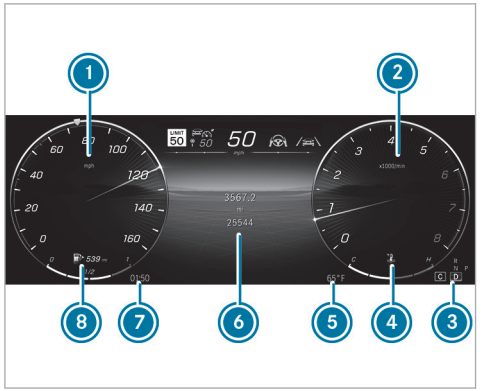

Vehicles with combustion engines

1. Speedometer
2. Tachometer or power meter
3. Transmission position
4. Coolant temperature display
5. Outside temperature
6. Display content, center on the Classic menu (example: trip distance)
7. Time
8. Fuel level and fuel filler flap location indicator

The following display content of the Classic menu can be shown in center display area 6:

- Trip and total distance
- Trip computer From Start and From Reset
- ECO display
- Consumption
- ATTENTION ASSIST
- Audio
- Navigation

ⓘ If navigation is selected as the display content in the center display area, navigation instructions that vary depending on the driving situation will appear.

ⓘ If you have selected display content in the center display area of the Classic menu and switch to the other menu, the selected display content will also be transferred.

Changing the radio station or track on the station or track list

You can select radio stations or tracks on the station or track list in the audio display content of the Classic menu.

The following adjustments can be made in the MBUX multimedia system:

- Configuring the station or track list
- Switching between media sources
- Setting the frequency band

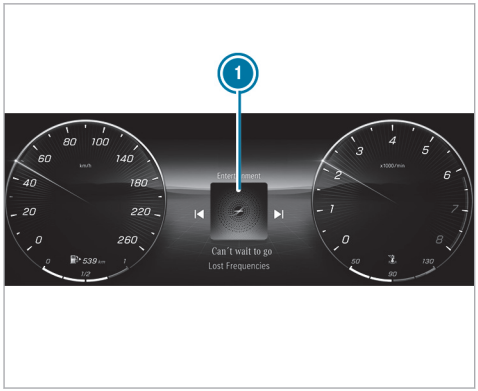

Track list for the audio display content in the center display area (example)

▶ **To change radio stations or tracks:** swipe left or right on the left-hand Touch Control and select a radio station or track on station or track list (1).

ⓘ The radio station or title displayed when the vehicle is restarted depends on the user profile used for the previous trip.

The following functions may be available on the Options submenu, for example:

- Navigation: selecting and adjusting zoom, route guidance and map settings
- Resetting the trip odometer
- Resetting the trip computer From Start
- Resetting the trip computer From Reset
- Resetting the ECO display values

Calling up the Service menu

Driver's display:

↳ Service

The current status of the vehicle is shown on the Service menu.

▶ **To call up the menu:** press the left-hand Touch Control.

The following display content is available on the Service menu (equipment-dependent):

- Information about how many messages are in the message memory
- Tire Pressure:
  - Restarting the tire pressure loss warning system (→ page 552)
  - Checking the tire pressure with the tire pressure monitoring system (→ page 551)
  - Restarting the tire pressure monitoring system (→ page 551)
- ASSYST PLUS: calling up the service due date (→ page 503)
- Engine Oil Level: checking the engine oil level (→ page 27)
- Coolant indicator

The following functions are available on the Options submenu:

- Tire pressure (→ page 551)
- Message memory (→ page 700)

Calling up the assistant display on the Assistance menu

Driver's display:

→ Assistance

Various driver assistance systems and navigation instructions are displayed on the Assistance menu.

▶ **To call up the menu:** press the left-hand Touch Control.



Active Distance Assist DISTRONIC display on the assistant display (example)

In vehicles with the Driving Assistance Plus Package, the following displays may vary depending on the driving situation:

- The navigation instructions in the left-hand display section
- The traffic light view in the right-hand display section
- The display of the driver assistance systems
- The level of detail on the assistant display

In vehicles without the Driving Assistance Plus Package, your lane and the vehicle in front will be displayed.

The following status displays are available on the assistant display:

- Green: pedestrian detection active
- Gray: pedestrian detection enabled
- Green radar waves next to vehicle: Blind Spot Assist or Active Blind Spot Assist enabled and ready for operation
- Gray radar waves next to vehicle: Blind Spot Assist or Active Blind Spot Assist enabled but not ready for operation

The content on the assistant display will adapt to the following situations:

- Number of lanes detected
- Change of direction, e.g. lane change
- Current road conditions
- Road users detected

ⓘ The assistant display does not display other detected obstacles with the exception of road users.

The following functions are available on the Options submenu:

- Starting route guidance
- With active route guidance: end route guidance
- Calling up previous destinations and favorites
- Starting new route guidance to a recent destination
- Starting new route guidance to a favorite

Calling up displays on the Sport menu

Driver's display:

→ Sport

The Sport menu provides information about the engine data of the vehicle.

ⓘ When you call up the Sport menu on the menu bar of the driver's display, the menu color setting will automatically be applied to the MBUX multimedia system.

▶ **To call up the menu:** press the left-hand Touch Control.

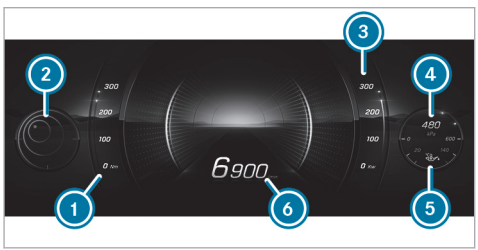

1 Current torque
2 G-meter
3 Current power output
4 Boost pressure
5 Engine oil temperature
6 Engine speed

Calling up navigation instructions on the driver's display

Driver's display:

→ Navigation

▶ **To call up the menu:** press the left-hand Touch Control.

Changing the scale of the selected map view



1 Distance to the change of direction
2 Road to which the change of direction leads
3 Display of traffic incident
4 Currently selected route
5 Indicator showing vehicle's current position
6 Change-of-direction symbol
7 Recommended lane (white)
8 Lane not recommended (gray)
9 Current lane

ⓘ The level of detail in the navigation instructions in the left-hand display section may vary.

▶ **To zoom in and out on the map directly:** swipe upwards or downwards on the left-hand Touch Control.

ⓘ If no operation is performed within a short time of the autozoom being activated, the set map scale of the map view already selected will appear.
You can set the permanent display of the map scale in the MBUX multimedia system (→ page 442).

The following functions are available on the Options submenu:

- With active route guidance: end route guidance
- Selecting route guidance

F214 0032 13

- Map settings

ⓘ If the current route guidance is ended on the Navigation menu of the driver's display, it will also be ended in the MBUX multimedia system.

On the Options submenu, you can use other functions in the Destinations and Map Settings categories.

You can use the following functions in the Destinations category:

- Calling up previous destinations and favorites
- Starting new route guidance to a favorite

ⓘ The two options Work and Home will be displayed in Favorites even if no address is stored.

You can use the following functions in the Map Settings category:

- Activating auto zoom
- Setting the map view, satellite view and route overview

The following map views are available on the Navigation menu:

- Entire route
- 2D direction of travel
- 2D north-up
- 3D map

ⓘ There is an additional navigation view on the front passenger display. The front passenger can thus assist the driver with route guidance (→ page 430).

Head-up Display

Function of the head-up display

The head-up display projects various content into the driver's field of vision, for example.

You can use the head-up display menu bar to select different contexts, e.g.:

- Minimal
- Sport
- Standard
- Offroad (equipment-dependent)
- Settings
- Head-up display on/off

Head-up display content with navigation (9x3°)

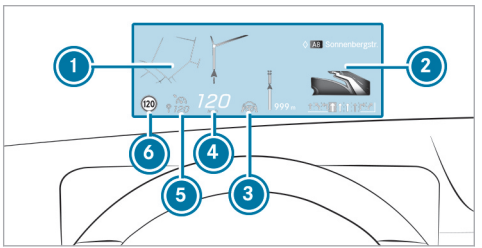

1. Navigation instructions
2. Navigation instructions (distance to the next route event)
3. Steer Assist status
4. Current speed
5. Set speed in the driving system (e.g. cruise control)
6. Detected traffic signs (Traffic Sign Assist)

When you receive a call, the Call Waiting message will appear on the head-up display and the driver display.

ⓘ The call will also be shown on the central display.

System limits

Visibility is particularly influenced by the following conditions:

- Seat position
- Image position setting
- Ambient light
- Wet road surfaces
- Objects on the display cover
- Polarization in sunglasses

Operating the head-up display

Selecting display content of the head-up display via the menu bar of the driver's display

▶ Press the ⌂ main menu button on the left.

▶ **To select the menu bar of the head-up display:** swipe upwards on the left-hand Touch Control.



Switching between display content on the head-up display

▶ Swipe to the left or right on the left-hand Touch Control.
A preview of the selected display content will appear on the head-up display.

▶ **To confirm:** press the OK button.

Switching back to the driver's display

▶ Press the ↩ or ⌂ button.

Setting the position and brightness

▶ Swipe to the left or right on the left-hand Touch Control and select Settings on the menu bar of the head-up display.

▶ Press the left-hand Touch Control.
The current position and brightness settings will be displayed as graphics on the head-up display as well as on the driver's display.

▶ **To adjust the position:** swipe upwards or downwards on the left-hand Touch Control.

▶ **To adjust the brightness:** swipe to the left or right on the left-hand Touch Control.
The settings configured for position and brightness will be saved automatically.

▶ Press the ↩ or OK button to exit the settings.

Switching the head-up display on/off

Driver's display:

→ ⌂

Switching on

- Swipe upwards on the left-hand Touch Control.
- Press the left-hand Touch Control.

Switching off

- Swipe upwards on the left-hand Touch Control.
- Swipe on the left-hand Touch Control and select Head-up Display.
- Press the left-hand Touch Control.

Vehicles with a 48 V on-board electrical system

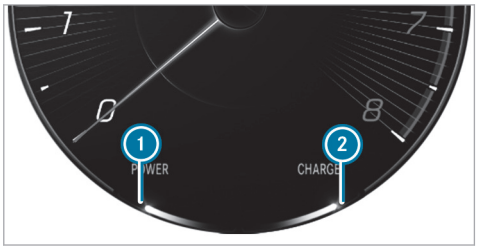

1. Electric drive support
2. Recuperation behavior of the electric motor

ⓘ Due to various system limits, the values displayed may temporarily differ slightly from the actual value.

Overview of status displays on the driver display

The status displays for the driving and driving safety systems can be found in display sections 1 to 4.



- Pedestrian detection (only on assistant display)
- Active Parking Assist is available (→ page 331)
- Active Parking Assist has recognized a parking space (→ page 331)
- Parking Assist PARKTRONIC deactivated (→ page 328)

- Cruise control (→ page 282)
- Active Distance Assist DISTRONIC (→ page 284)
- Specified distance for Active Distance Assist DISTRONIC (→ page 284)
- Active Brake Assist switched off (→ page 306)
- Active Brake Assist impaired or not functioning (→ page 306)
- Active Steering Assist (→ page 293)
- Active Lane Change Assist (→ page 296)
- Active Lane Keeping Assist (→ page 314)
- Active Blind Spot Assist (only on assistant display) (→ page 313)
- ECO start/stop function (→ page 245)
- HOLD function (→ page 277)
- Adaptive Highbeam Assist (→ page 206)
  Adaptive Highbeam Assist Plus (→ page 207)
- Active Stop-and-Go Assist (→ page 292)
- Slippery road surface warning

Vehicles with Traffic Sign Assist: Detected instructions and traffic signs (→ page 306)

Important information from other driving systems may be briefly faded in over the displayed traffic signs.

Notes on operating safety

For your own safety, always observe the following points when operating mobile communications equipment and especially your Voice Assistant:

- Observe the legal requirements for the country in which you are driving.
- If you use the Voice Assistant in an emergency your voice can change and your telephone call, e.g. an emergency call, can thereby be delayed.
- Familiarize yourself with the Voice Assistant functions before starting the journey.

ⓘ **The Voice Assistant does not replace the Operator's Manual.**
The answers from the Voice Assistant do not provide the complete scope of information contained in the Operator's Manual. The Voice Assistant also does not give detailed warning or damage information. You can get the full scope of information about the function and safe operation of the systems and components in the vehicle in the Operator's Manual.

Operation

Function of the MBUX Voice Assistant

You can watch an animation on this topic via the following link:

Using the MBUX Voice Assistant, vehicle functions and various areas of the MBUX multimedia system can be operated by voice input, e.g. Navigation or Telephone. The MBUX Voice Assistant is operational about half a minute after switching on the vehicle and can be operated from all seats (depending on the special equipment).

Conducting a dialog

Requirements:

- Voice activation must be switched on in the multimedia system (⟶ page 361).
- For corrections during output, the Speak During Voice Output option must be activated in the multimedia system (⟶ page 361).

Starting a dialog

▶ Say **Hey Mercedes** to activate the MBUX Voice Assistant.

or

▶ Press the button on the multifunction steering wheel.
A blue wave appears in the MBUX multimedia system. The dialog can be started.

For the dialog with the MBUX Voice Assistant, you can use complete sentences of colloquial language as voice commands. Voice activation can also be combined directly with a voice command, e.g. **Hey Mercedes, how warm is it outside?**

Interrupting the dialog

▶ During the dialog say **Pause**.
The dialog is interrupted.

▶ Say **Hey Mercedes** to continue the dialog.

Changing dialog level

▶ During the dialog, say **Back**.
The MBUX Voice Assistant jumps back to the previous dialog step.

Navigating in the selection list

If a voice command does not achieve a clear result, a selection list is shown.

- Say the line number or the content to select an entry or to have further details shown.
- Say Next page or Previous page to browse the selection list.

Calling up help

- **Current application:** say Help.
  You will receive suggestions and information about operation of the MBUX Voice Assistant for the current application.
- **Specific function:** call up the voice command for the required function, for example with Hey Mercedes, I need help with Radio.

Overview of the operable functions of the MBUX Voice Assistant

You can use the MBUX Voice Assistant to operate the following functions depending on the vehicle equipment:

- Telephone
- Text message and e-mail
- Navigation
- Radio and media
- Vehicle functions
- Online functions

Full functionality of the Voice Assistant is only available for you with activation of online voice control (→ page 361).

Information on the language setting

You can change the language of the MBUX voice assistant via the system language settings (→ page 400). If the set system language is not supported by the MBUX voice assistant, English will be selected.

Using the short language command "Change language to English.", the language of the MBUX voice assistant can be set to English .

Setting functions of MBUX Voice Assistant using the multimedia system

Multimedia system:
→ ⌂ ▸▸ Settings ▸▸ System ▸▸ Voice Assistant

Switching voice activation of MBUX Voice Assistant on or off

ⓘ For vehicles with driver camera or MBUX Interior Assistant, the MBUX Voice Assistant can be switched on or off in the Intelligent Assistants menu.

- Select Hey Mercedes.
  When the function is active, the Hey Mercedes voice command can activate the dialog.

Switching voice activation for individual seats on or off

- Select ⚙.
- Switch the function for the desired seats on or off.

Switching voice interruption on or off

- Select More Settings.
- Select Speak During Voice Output.
  If the function is active, a command can be interjected during voice output of the system.

Switching proactivity on or off

- Select More Settings.
- Select the desired situation, e.g. Profile Activation or Don't Forget Your Phone.
  When the function is active, the voice assistant proactively provides information in specific situations.

Activating or deactivating online voice control

ⓘ Online voice control is activated at the factory.

- Select Online Voice Control.
- Activate or deactivate the function.
  If the function is activated and a Mercedes me user account is linked to the vehicle, additional results are available through the provision of external information, e.g. information on POIs. By clicking the symbol in the blue wave, more information about the online voice control can be displayed.

Activating or deactivating contacts for online use

- Select Contacts for Online Use.
  When the function is active, contacts will be found more easily and accurately using voice input.

Using MBUX voice assistant effectively

Notes on optimum use of MBUX Voice Assistant

- The MBUX Voice Assistant is operational half a minute after switching on the vehicle and can be operated from all seats, depending on the equipment installed. The system recognizes from which seat the command was spoken and performs actions according to the seat position.
- If a dialog has been ended, the MBUX Voice Assistant continues to be active, as long as the blue wave is shown in the multimedia system. You can say another voice command without saying Hey Mercedes.
- If a dialog has been ended, the MBUX Voice Assistant continues to be active, as long as the blue wave is shown in the multimedia system. You can say another voice command without saying Hey Mercedes (→ page 361).
- With the MBUX Voice Assistant, incoming calls can be accepted or rejected without the keyword Hey Mercedes.

Information on the MBUX online voice assistant

The online voice control facilitates recognition and thanks to external information makes additional results available.

Therefore, Mercedes-Benz recommends that you activate online voice control (→ page 361).

You will need a Mercedes me user account for this. If you do not yet have a user account you have to create one and connect it with your vehicle (→ page 380).

Then call up your Mercedes me user account. The Mercedes me services are shown and can be activated (→ page 382).

By clicking on the symbols displayed in the blue wave, further information on the online status is displayed.

When online voice control is active, additional functions are available such as:

- Weather
- General knowledge
- Public holidays and school holidays
- Smarthome
- Messages
- Time, date and time zones
- Pocket and currency calculator
- Football results and fixture lists
- Share prices
- Calendar
- ChitChat
- Horoscope
- Geo Quiz

ⓘ The availability of these functions is country and equipment-dependent.

ⓘ Text content is taken from Wikipedia in accordance with the CC BY-SA 3.0 license.

Essential voice commands

Notes on voice commands

It is not necessary to use exact voice commands to call up a specific function. The MBUX Voice Assistant also understands you when you use your colloquial speech. Some examples are listed below. For some languages however these examples are only available to a limited extent.

Examples of voice commands:

- Navigation (→ page 363)
- Telephone (→ page 364)
- Radio and TV (→ page 364)
- Media player (→ page 364)
- Vehicle functions (→ page 365)
- Online functions (→ page 365)

Examples of navigation voice commands

You can operate the navigation system using the MBUX Voice Assistant. The following list offers just a small selection of the possible navigation commands. You will receive additional suggestions if you say Help for navigation.

ⓘ The MBUX Voice Assistant enables three-word addresses to be used for navigation. Further information on three-word addresses (→ page 420).

"Hey Mercedes, ..."

- Drive me home.
- Where is the nearest gas station?
- Is there a service area along the route?
- Set Central Park as intermediate destination.
- Cancel the route guidance.
- Show my last destination.
- I want to buy juice.
- Search for a French restaurant in Manhattan.
- Search for a gas station near the Mercedes-Benz Museum in Stuttgart.

- Navigate me to Chicago and avoid toll roads.
- How is the traffic on the way to work?

Examples of telephone voice commands

You can operate phones connected with MBUX multimedia system the using the MBUX Voice Assistant. The following list offers just a small selection of the possible telephone commands. You will receive additional suggestions if you say Help for phone.

"Hey Mercedes, ..."

- Call Peter Miller on the mobile phone.
- Dial 0711 17 0.
- Call my father.
- Write a text message to Jane Doe.
- Search for the contact Peter Miller.
- Tell Peter Miller: "I'll be there five minutes later".
- Read me my new text messages.
- Show me the missed calls.
- Switch to address book

For an incoming call:

- Reject call
- Accept call

Examples of radio and TV voice commands

Depending on the vehicle equipment, you can operate the radio and TV using the MBUX Voice Assistant. The following list offers just a small selection of the possible radio or TV voice commands. You will receive additional suggestions if you say Help for radio or Help for TV.

"Hey Mercedes, ..."

- Play the radio station Heart FM.
- Next station.
- Previous station.
- Show me the list of radio stations
- Save the station
- What am I listening to?

Examples of media voice commands

You can operate connected media sources and online music using the MBUX Voice Assistant. The following list offers just a small selection of the possible media voice commands. You will receive additional suggestions if you say Help for media or Help for player.

"Hey Mercedes, ..."

- Play Michael Jackson.
- Play Michael Jackson on Spotify.
- Play "Yellow Submarine' by the Beatles.
- Next track.
- Previous track.
- Play similar track.
- Repeat this track.
- Please skip five seconds.
- Please go back five seconds.
- Switch on random playback.
- Set the music volume to level six.
- Mute the music.
- Switch to USB.

Examples of vehicle voice commands

You can operate vehicle settings and vehicle functions using the MBUX voice assistant. The following list offers just a small selection of the possible vehicle voice commands.

ⓘ If no seat is mentioned for commands, the action is carried out automatically for the seat from which the command was spoken or for the function which is closest to that seat.

"Hey Mercedes, ..."

- Switch the seat heating to level 2.
- My feet are cold.
- Start the Refresh program.
- Switch the relaxation function on.
- I would like to set the ambient light to blue
- Switch on the reading lamp.
- Turn off the rear passenger compartment light.
- Open all the windows.
- Switch the driver display to 3D.
- How fast can I drive here?
- Tell me my next service appointment
- How warm is it outside?

Information about the vehicle can also be requested:

- Information about individual items of the vehicle equipment
  - Hey Mercedes, which massage programs do you have?
  - Hey Mercedes, do I have Blind Spot Assist?
  - Hey Mercedes, where is the warning triangle?
- Information about functioning of the systems and components installed in the vehicle
  - Hey Mercedes, what is DISTRONIC?
  - Hey Mercedes, what do I need ESP for?
  - Hey Mercedes, what is MBUX?
- Information about operating the systems and components integrated in the vehicle
  - Hey Mercedes, how do I connect my smartphone?
  - Hey Mercedes, how can I turn on the high beam headlamps?
  - Hey Mercedes, how do I stop the ionization function?

Examples of online functions

Depending on the country, language and vehicle equipment, additional functions are available when online voice control is active. The system accesses external information and can, for example, answer questions about general knowledge, provide information about weather or locations, perform calculations, etc.

"Hey Mercedes, ..."

- Is the sun shining in Manchester?
- Is it raining at my location?
- What are the skiing conditions on the Zugspitze?
- What's the time in Sydney now?
- In which country do you pay with dollars?
- How many Swiss franks make 25 euros?
- How long now until the holidays?

- What day is it tomorrow?
- What is 20% of 29?
- What does my horoscope say?
- What is the price of Mercedes-Benz Group shares?
- Let's play Geo Quiz.
- I'm bored.
- Who is the current prime minister?
- What do you know about the Globe Theatre in London?
- Who painted the picture "The Scream"?
- What's the status in the Premier League?
- Create a calendar entry tomorrow at 9 am.
- What's my next task?
- Tell me a joke.
- How many languages do you speak?
- What is your favorite animal?
- Are there any updates?

Overview and operation

Overview of the MBUX multimedia system

WARNING Risk of distraction from information systems and communications equipment

If you operate information systems and communication devices integrated in the vehicle when driving, you could be distracted from the traffic situation. This could also cause you to lose control of the vehicle.

- Only operate this equipment when the traffic situation permits.
- If you cannot be sure of this, stop the vehicle whilst paying attention to road and traffic conditions and operate the equipment with the vehicle stationary.

You must observe the legal requirements for the country in which you are currently driving when operating the multimedia system.

NOTE Increased surface temperature due to direct sunlight on the central display/front passenger display

The surface of the display is very dark.

If the display is exposed to direct sunlight, the surface may heat up considerably.

- If the display has been exposed to direct sunlight, allow it to cool down before touching it for a longer period of time.

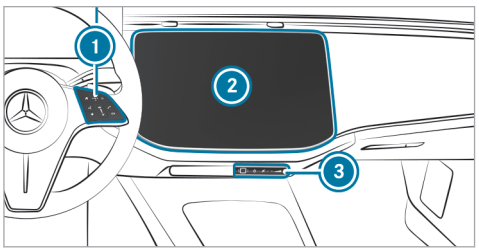

Vehicles with central display

1. Touch Control and control panel for the MBUX multimedia system
   - Operating Touch Control (→ page 377)
2. Central display with touch functionality for the driver
   - Overview of the Zero Layer (→ page 371)
   - Calling up and operating the Zero Layer (→ page 373)
   - Home screen overview (→ page 375)
   - Operating the touchscreen (→ page 378)
3. Switch panel with:
   - Switches the MBUX multimedia system on or off, switches the central display off
   - Switches sound on or off
   - Adjusts the volume

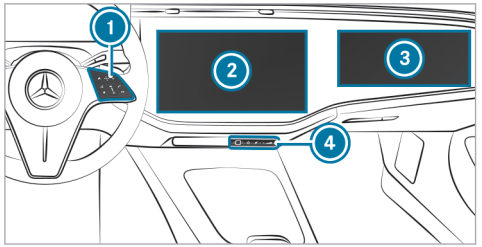

Vehicles with MBUX Hyperscreen

1. Touch Control and control panel for the MBUX multimedia system
   - Operating Touch Control (→ page 377)
2. Central display with touch functionality for the driver
   - Overview of the Zero Layer (→ page 371)
   - Calling up and operating the Zero Layer (→ page 373)
   - Home screen overview (→ page 375)
   - Operating the touchscreen (→ page 378)
3. Front passenger display with touch functionality
4. Switch panel with:

   ⏻ Switches the MBUX multimedia system on or off, switches the front passenger and central displays on or off

   Switches sound on or off

   Adjusts the volume

ⓘ Various MBUX multimedia system apps offer the option of linking with a QR code. Scan this QR code with your mobile phone before starting the journey.

ⓘ Alternatively, the MBUX voice assistant allows voice dialog. Operation with natural speech starts after the wake-up call "Hey Mercedes" (→ page 360). You can start a voice navigation, for example, with the input of a three-word address from what3words.

ⓘ If the vehicle is equipped with the MBUX Interior Assistant, vehicle and infotainment functions can be used contact-free. The interaction then follows intelligently, reactively or with hand or head movements.

Numerous application, online services, services and apps are available for you. These can be called up via the home screen.

In the zero layer, entertainment sources as well as telephone, active applications and suggestions are directly available to you. You can conveniently call up and add your telephone favorites using the ★ button on the steering wheel.

Quick-access in the home screen and in the applications serve to select functions more quickly.

If you use the learning function of the multimedia system, phone numbers dialed during operation, active massage programs or vehicle functions are suggested to you, for example. Suggestions are displayed on the zero layer based on context and your user behavior. The configuration of the suggestions is completed in the system settings. Furthermore, the multimedia system learns routines. Routines are actions that run automatically under certain conditions. You can compile your user profile from various vehicle settings and settings of the multimedia system. Some functions and services are protected by a PIN. If you teach in biometric procedures, you can use these instead of the four-digit Mercedes me PIN to identify yourself.

The Notifications Center collects incoming notifications, e.g. about an available software update.

Depending on the type of notification it offers various actions. The call is made via the Control Center.

Overview of the front passenger display (only vehicles with MBUX Hyperscreen)

WARNING Risk of accident and injury due to distraction when the driver is looking at the front passenger display

If you look at the front passenger display while driving, you may be distracted from the traffic. This could also cause you to lose control of the vehicle. The front passenger display is intended exclusively for the front passenger.

- Keep the actual traffic situation constantly in view.
- Avoid looking at the front passenger display while driving.

The front passenger display is an additional touchscreen specifically for the front passenger.

Requirements for displaying menu content on the front passenger display while driving:

- The front passenger is sitting on the front passenger seat.
- The front passenger display is switched on and is not showing a digital decorative image.
- The driver camera is switched on (→ page 395).

  The [camera] symbol is shown in the status line of the central display.
- The driver camera detects the driver's head and line of sight.

The front passenger display shows content from the MBUX multimedia system independently of the central display. Depending on the application, operation is independent of the driver. Depending on the market, extended content, e.g. playback of media content, is also available while driving.

ⓘ When the vehicle is parked (transmission in position [P]), the front passenger can use the front passenger display.

If the driver has left the vehicle briefly, e.g. to go shopping, the front passenger display can also be operated.

ⓘ If no front passenger is present, a digital decorative image can be shown on the front passenger display.

Visual shield function for front passenger display

The visual shield function is a function for the driver. This reduces the peripheral perception of the front passenger display.

Certain content on the front passenger display is dimmed for the driver.

Requirements for activating the visual shield function:

- The content shown on the front passenger display is blocked for the driver while driving, e.g. playback of videos.
- The MBUX multimedia system identifies the content to be locked for the driver and locks it automatically.

Intelligent, camera-based blocking concept

The driver camera detects the driver's head and line of sight directed to the front passenger dis-

play. If the system detects the driver looking at the front passenger display for too long while driving, the display brightness for the front passenger is reduced for content subject to blocking. These contents are thus no longer visible to the driver and do not distract them during driving. A symbol appears in the top right-hand corner of the front passenger display.

Requirements for the function:

- The driver camera is switched on.

  The [ ] symbol is shown in the status line of the central display.

  If these conditions are not fulfilled, the display brightness is permanently reduced for all content that is subject to blocking.
- The driver camera is functional and not covered.

The front passenger display shows the contents again in the usual way under the following conditions:

- The driver looks forward again.
- No blocked content is shown on the front passenger display.

Anti-theft protection

This device is equipped with technical provisions to protect it against theft. Further information on anti-theft protection can be obtained at an authorized Mercedes-Benz Center.

Zero layer

Function of the zero layer

ⓘ Your software can be upgraded to a more current version at a later date.

The zero layer provides you with dynamic content from the MBUX multimedia system and is used to quickly access and control the applications you use. When you select [ ] on the central display, the digital map with the applications appears in the lower display area. Compared to the home screen with a classic menu, the steps required to call up the applications are reduced. You can switch between the zero layer and the home screen with a classic menu.

The applications can be hidden from the display area and shown again.

The zero layer provides the following modules and applications:

- Navigation module

  In the expanded view you can, for example, have the route overview displayed, switch on the display of traffic information and make settings for the View (map), Messages & Acoustic Signals and the Route.
- Entertainment (media, radio) and telephone

  When the lower display area is shown, the entertainment sources are always displayed.

  A mobile phone must be connected to the MBUX multimedia system for the phone to be displayed.
- Active applications

  The lower display area shows an active massage program, for example.
- Suggestions

  Suggestions are displayed on the lower display area based on context and your user behavior. Here are a few examples:

  - Latest calls

- Active massage programs
- Vehicle functions
- Online voice applications
- Personalized routines

  The learning function of the system recognizes your typical operating sequences and offers to perform these automatically for you as a routine.

Modules and applications are first shown in a reduced view. By tapping on them, you can operate them or open the associated menu (expanded view).

A long press on a suggestion opens a context menu in which further functions are available.

The learning function can be switched on and off for the options (→ page 400).

Overview zero layer

Digital map and user-specific applications (example)



1. Navigation module (reduced view)
2. Destination entry (→ page 32)

   Searching for parking
3. Calls up the Control Center (pull the bar down)
4. Status line
5. Calls up user profile settings
6. Active application
7. Telephone

   Requirement for phone: the mobile phone is connected to the MBUX multimedia system.
8. ⌂

   Press briefly: shows all applications (→ page 373)

   Press and hold: calls up the home screen with classic menu (→ page 375)
9. Entertainment sources (media, radio)
10. Route monitor

    e.g. route list, lane recommendations, toll stations, 3D image of the upcoming driving maneuver

The zero layer shows the digital map and the user-specific applications.

The following user-specific applications are displayed in the lower display area:

- Suggestions

  Requirement: suggestions are activated (→ page 400).
- Active applications

  e.g. a massage program
- Telephone 7

- Entertainment sources (8)
- Online voice applications

The lower display area can be hidden and shown (→ page 373).

Information about entertainment sources

You can operate the applications in the reduced view or in the menu (expanded view) (→ page 373).

Examples:

- Control a media source, e.g. pause/play, next track, set a station
- Select tracks from the current playlist or stations from the station list
- Select a media source

  The media source must be connected to the MBUX multimedia system.

Information about the telephone

To use the functions, the mobile phones must be connected to the MBUX multimedia system.

Requirement for suggestions: the Calls & Messages option is activated in the suggestions.

Examples:

- Answer a call and call a missed call

  The missed calls are displayed for the mobile phones connected to the MBUX multimedia system.
- Display contacts and call list and call a contact
- Use voice functions
- Suggest contacts

  The contacts are suggested for the mobile phones connected to the MBUX multimedia system. No contacts are suggested for the mobile phones that are linked to another user profile.
- Write messages to contacts (suggestion)
- Connect a device via the device manager (suggestion)

Information about active applications

The following functions are available:

- Operating a massage program
- Operating an ENERGIZING COMFORT program

Suggestions for comfort and vehicle functions as well as navigation

Requirement: the Comfort, Vehicle and Navigation options are activated in the suggestions.

- Operating a massage program

  For example, the multimedia system suggests a program at a certain time.
- Opening the trunk lid

  Requirement: the vehicle is equipped with trunk lid convenience closing.
- Operating an ENERGIZING COMFORT program
- Making heating settings
- Activating/deactivating Parking Assist PARKTRONIC
- Selecting previous destinations and destinations from favorites

Suggestions for online voice applications

Requirement: the Online Voice Services option is activated in the suggestions.

The suggested voice applications are made available online and are based on your previous voice inputs.

Examples:

- What will the weather be like tomorrow?
- Play the messages.
- Start geoquiz.
- Open the garage door.

Suggestions for activating recognized routines
Requirement: the Learning & Suggestions option is activated in the suggestions.

Routines are actions that run automatically under certain conditions. An example of a routine: whenever you drive to work in the morning (condition), the MBUX multimedia system should set a certain massage program (action). Routines can also perform different actions.

Calling up and operating the zero layer

Calling up the zero layer
When the vehicle has been switched on, the zero layer is displayed with the digital map. Navigation is active.

- **From another application:** press the ⌂ button on the right side of the steering wheel.

or

- Tap on ⌂.

Operating applications in the reduced view (examples)

- **Media:** to play the previous or next track, tap ⏮ or ⏭.
- **To answer a call or call a missed call:** tap on the contact.
  After the connection has been established, the call functions are available.
- **To end a call:** tap on the contact again.
- **To reply to message:** tap on a message and dictate the message via the MBUX Voice Assistant.
- **To start a relaxation program:** tap on the application and start the relaxation program.
- **To select a previous destination:** tap on the application and select one of the previous destinations.
- **To select a destination from the favorites:** tap on the application and select the destination.

Hiding and showing the display area with applications

- **To hide:** pull the applications down.
- **To show:** pull the bar above ⌂ upwards.

or

- Select ⌂.

or

- Press the ⌂ button on the steering wheel on the right.

Navigation module (expanded view)



Example: route guidance is active

1. Destination
2. Searches for a gas station
3. Switches traffic information display on or off

- Tap on the navigation module (→ page 371).
- Select Route in the lower menu bar.

Operating a menu in the lower display area (example: active relaxation program)

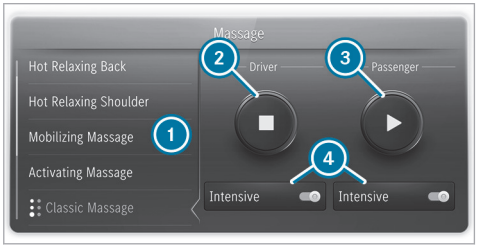

1. Selects a relaxation program
2. Starts/stops a program for the driver
3. Starts/stops a program for the front passenger
4. Sets the relaxation program intensity for the driver's or front passenger seat

- Tap on the application.
  The expanded view of the application is displayed.
- **To close the menu:** select [↩].

Opening and closing the context menu for a suggestion

- Press and hold on a suggestion.
  The context menu opens and shows the No Longer Suggest option, for example.
- **To close:** swipe downwards.

Removing a suggestion from the display area

- Swipe the suggestion upwards.

Showing all applications

- Press [⌂] briefly.
  Available applications are displayed.
- **To hide applications:** briefly press [⌂] again.

Switching between zero layer and home screen with classic menu

- Long press on [⌂].
  The home screen with classic menu is shown.
- **To return to the zero layer:** press and hold on [⌂].

Home screen overview

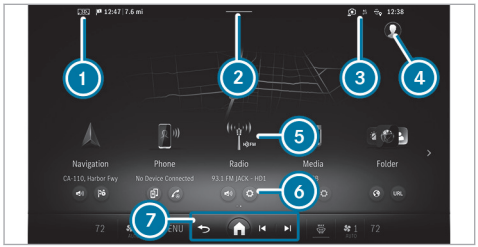

1. Status line
2. Calls up the Control Center: pull the bar down
3. Displays in the status line
4. Calls up user profile settings and switches user
5. Calls up an application
6. Quick-access to application
7. Global menu
   - Calls up previous menu
   - Press and hold: switches between home screen and zero layer
   - Previous track or previous radio station
   - Next track or next radio station

ⓘ During a telephone call, the call duration is displayed in global menu 7.

Alternatively, to switch between the home screen and the zero layer, press and hold the button on the steering wheel on the right.

When bar 2 is pulled down, the Control Center appears.

The following functions are called up in the Control Center:

- Notifications Center
- Quick vehicle access

Personalized routines

Overview of personalized routines

The MBUX multimedia system supports you with daily routine tasks and can run them automatically. The system's learning function recognizes your typical operating sequences and suggests them as a routine in recurring situations.

When the system recognizes a routine, it is proposed to you on the zero layer for activation.

Routines are actions that run automatically under certain conditions. An example of a routine: whenever you drive to work in the morning (condition), the MBUX multimedia system should set a certain massage program (action). Routines can also perform different actions.

Routines are available to you via three options:

- The MBUX multimedia system learns and suggests routines.
- You create your own routines.
- You select predefined routines (templates).

If the learning function Learning & Suggestions is switched on and enough data is available, the system suggests a routine on the zero layer. You can activate or reject these. In the future, when the conditions for the routine are met, you will receive a notification with a timer. After confirmation or expiration of the timer, the actions of the routine are executed. If you tap ■ in the notification, the routine is canceled. No actions are performed. However, the routine is still activated. If

the conditions for the routine are met again, you will receive a notification again.

You can create your own routines or select predefined routines via the Routines app.

Conditions for routines are, for example:

- When should a routine start?
  - Weekdays at 8 a.m.
- Where should a routine start?
  - Start at home, start at work, tunnel passage
- At what temperature should a routine start?
  - From 32 °F (0 °C)
- At which event should a routine start?
  - Incoming or outgoing call
  - Strong sunlight

You can select the following actions, for example, from categories:

- Comfort
  - Selecting a massage program
  - Setting the seat heating
  - Selecting an ENERGIZING COMFORT program
- Climate control
  - Setting temperature (front, rear)
  - Activating or deactivating the AC function
  - Adjusting the air vents
- Entertainment and navigation
  - Selecting a radio station
  - Selecting a media source
  - Switching off navigation announcements

Activating and starting suggested routines

Multimedia system:

→ ⌂

Activating routines

When a new routine is detected, it is suggested for automation on the zero layer.

▶ Select Yes.
In the future, when the conditions for the routine are met, a notification will be displayed to prepare you to execute the routine.

or

▶ **To reject the routine this time:** select Decide later.
You can find the routine in the Routines app and can activate or delete it there at any time.

Starting a routine

A notification is displayed with a timer. When the timer has expired, the routine starts automatically.

▶ **To start the routine immediately:** tap the notification text.

▶ **To reject routine this time:** tap ■.
If the conditions for the routine are met, the routine will be offered again in the future.

Creating your own routines

Multimedia system:

→ ⌂ ▸▸ Routines ▸▸ Create routines

Configuring conditions

▶ Select +.

▶ Select the condition, e.g. Weekdays.

▶ Select further conditions if required.

Configuring actions

▶ Select +.

- Select the category, e.g. Comfort.
- Select the action, e.g. Classic Massage.
- If required, select further actions also from other categories.
- Select Continue.
- Select a symbol and enter a name, e.g. My first routine.
- Select Add Routine.
  The routine appears in the overview. When the conditions for the routine are met, a notification is displayed. The routine can be started.

ⓘ You can edit a created routine at any time.

Selecting predefined routines

Multimedia system:

→ ⌂ ›› Routines ›› Templates

- Activate the desired routine.
  When the conditions for the routine are met, a notification is displayed. The routine can be started.

ⓘ Templates can be edited like your own routines.

Touch Control

Operating Touch Control (MBUX multimedia system)

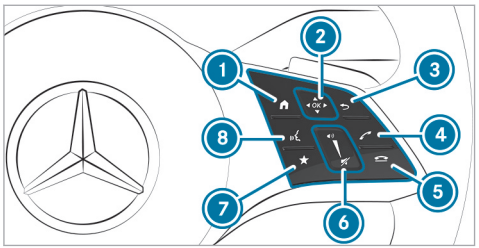

1. ⌂ Shows zero layer/home screen
2. Touch Control
   ◀ ▲ ▶ ▼ swipe in the direction of the arrow (navigate)
   OK Press (confirm)
3. ↩ Returns to the previous display
4. ✆ Makes or accepts a call
5. ✆ Rejects or ends a call
6. To increase volume: swipe upwards
   To reduce volume: swipe down
   🔇 To switch off the sound: press
7. ★ Calls up telephone favorites
8. 🎤 Starts the MBUX voice assistant

ⓘ To operate Touch Control 2 in the most effective way, use the tip of your thumb if possible.

You can navigate through menus and lists via the touch-sensitive surface of Touch Control 2 using **a single-finger swipe**, for example:

- **To enter a character:** select a character using the keyboard and press on Touch Control 2.
- **To select a menu option:** scroll in a list and press Touch Control 2.
- **To move the digital map:** swipe in any direction.

Setting the sensitivity for Touch Control

Multimedia system:

→ ⌂ ⏩ Settings ⏩ System ⏩ Control Elements ⏩ Touch Control Sensitivity

- Select Fast, Medium or Slow.

Setting acoustic operational feedback for all control elements

Multimedia system:

→ ⌂ ⏩ Settings ⏩ System ⏩ Control Elements ⏩ Acoustic Feedback

The function is supported by the selection in a list.

- Set Off, Regular or Loud.
  If the function is activated you will hear a clicking sound when selecting control elements or when scrolling in a list. When the beginning or end of the list is reached you will hear another clicking sound.

Touchscreen

Operating the touchscreen

Tapping

- **To select a menu item or entry:** tap on a symbol or an entry.
- **To increase the map scale:** tap twice quickly with one finger.
- **To reduce the map scale:** tap with two fingers.
- **To enter characters with the keypad:** tap on a button.

Single-finger swipe

- **To navigate in menus:** swipe up, down, left or right.
- **To move the digital map:** swipe in any direction.

Two-finger swipe

- **To zoom in and out of the map:** move two fingers together or apart.
- **To enlarge or reduce the size of a section of a website:** move two fingers together or apart.
- **To turn the map:** turn counter-clockwise or clockwise using two fingers.

Three-finger swipe

- **To call up the home screen:** swipe up with three fingers in an application.

Touching, holding and moving

- **To move the map:** touch the touchscreen and move your finger in any direction.
- **To set the volume on a scale:** touch the touchscreen and move the finger to the left or right.

Touching and holding

- **To save the destination in the map:** touch the touchscreen and hold until a message is shown.
- **To call up a global menu in the applications:** touch the touchscreen and hold until the Options menu appears.

User

Notes on user profiles

WARNING Risk of becoming trapped during adjustment of the driver's seat after calling up a driver profile

Selecting a user profile may trigger an adjustment of the driver's seat to the position saved under the user profile. You or other vehicle occupants could be injured in the process.

- Make sure that when the position of driver's seat is being adjusted using the multimedia system, no people or body parts are in the seat's range of movement.

If there is a risk of someone becoming trapped, immediately stop the adjustment process by:

- a) Pressing the warning message on the central display.

or

- b) Pressing a position button of the memory function or a seat adjustment switch in the driver's door.
  The adjustment process is stopped.

The driver's seat is equipped with an anti-entrapment feature.

If the driver's door is open, the driver's seat will **not** be set after calling up the driver's profile.

Overview of user profiles

Requirements for use

- You have a Mercedes me user account.
- You have a Mercedes me PIN.
- You have agreed to the terms of use.
- The vehicle is linked to a Mercedes me user account.

ⓘ If one of the pre-requisites listed is missing or if no user profile has been selected, the data described in the following section will be saved in the vehicle as the standard setting. Standard settings can be changed by all vehicle users.

User profiles save personal settings. If the vehicle is used by several people, a person can change their profile settings without changing the settings of other users.

ⓘ Some settings apply to the entire vehicle and are displayed in all user profiles, e.g. ambient lighting and the current navigation settings. These are assigned to the driver's profile, but can also be changed by the other vehicle occupants in their user profile.

You can individualize a user profile in the vehicle using the set-up assistant or using the settings in your user profile. Some settings, e.g. the Mercedes me PIN and a profile photo are made in the Mercedes me App or in the Mercedes me Portal.

ⓘ If the user profile is downloaded while traveling, user profiles are not set up using the set-up assistant.

User-specific content and applications with personal data are protected by different levels of security (→ page 381).

To access protected content, the Mercedes me PIN and, depending on the vehicle equipment, biometric sensors are used.

ⓘ The security level is set by the multimedia system and calculated from the combination of all sensor inputs. Some security levels cannot be turned off.

ⓘ When a user profile is activated, the following personalized comfort systems, for example, can be adjusted or their settings loaded:

- Seat
- Ambient light
- Outside mirrors
- Roller blinds
- Climate control settings
- Head-up display

If the user profile is activated when driving then the driver's seat position will not be adjusted.

User-specific content

Depending on the vehicle equipment you can, as a user, save the following settings, for example:

- Driver's seat, steering wheel and mirror settings
- Climate control
- Ambient light
- Radio (including station list)
- Suggestions

This function is an on-demand feature (→ page 81): if the vehicle key is linked to the user profile, the user profile is pre-activated when unlocking the vehicle or approaching a vehicle with KEYLESS-GO. Light, mirror and seat adjustments are made during this process. To use a user profile or an application, the vehicle key also serves as a sensor input for authorization.

You can watch an animation on this topic via the following link:

Adding a user

Requirements:

- The vehicle is stationary.

F214 0032 13

Multimedia system:

→ ⌂ ▸▸ 👤 ▸▸ Select User

▶ Select ⊕ Add User.
A QR code is loaded.

▶ Scan the displayed QR code with the Mercedes me App or any QR code scanner on a mobile device. If the Mercedes me App is not yet installed on your mobile device, you will be directed to the store of your mobile device.

▶ Follow the steps in the Mercedes me App.
The vehicle is connected with your Mercedes me user account. This automatically creates your user profile in the vehicle.

If only your user profile is available, it will be loaded automatically.

If more than one user profile is available, you will be directed to the user selection.

When the vehicle is stationary, the set-up assistant starts automatically after user selection.

ⓘ When the user has been added, they can be selected (→ page 382).

Selecting user options

Requirements
- A user has been selected.

Multimedia system:


Protecting user-specific content and applications
If you add a new user, access protection is already activated for the user profile. The Mercedes me PIN and, depending on the vehicle equipment, biometric sensors are available for access. Biometric sensors in the vehicle must be taught in. The authentication process then takes all taught-in and available sensors into account.

The following user-specific content and applications are protected, for example:
- User selection and user profile settings
- Biometric sensors

  The teaching-in of biometric sensors

  For teaching in and editing biometric recognition see the following section.
- Suggestions

  The data and determination of the most probable navigation destinations, media sources, radio stations, contacts and messages.
- ENERGIZING COACH

  The recorded health data and its evaluation.
- Parking service

  The payment transactions.
- Mercedes me Store

  The purchase of services.
- System activations of paid vehicle functions

In the following cases you will be prompted for authentication or re-authentication using a sensor or the Mercedes me PIN:
- When selecting a protected user profile
- When calling a function requiring special protection
- If biometric sensors provide insufficient or contradictory information
- If the multimedia system no longer trusts a sensor
- If the seat belt buckle and the door are opened at the same seat and a function requiring special protection is called up

ⓘ Facial recognition for re-authentication in the driver's seat is only possible once the door has been closed or the seat belt buckle has been fastened again.

▶ Select Protect Content.

▶ Deactivate or activate Access Protection.

ⓘ When access protection is switched off, your user profile can be viewed from any seat and changes can be made.

ⓘ Access protection is switched on or off on a vehicle-specific basis.

ⓘ Note that authentication is necessary for some functions and therefore cannot be switched off completely.

Setting up and editing biometric recognition
The biometric data models are saved in the sensors in the vehicle. If recognition has been set up, this sensor serves as a contributory factor for authentication on the multimedia system.

- Select Protect Content.
- Select Facial Recognition.

ⓘ If necessary, authenticate yourself on the multimedia system.

Setting up facial recognition

- Close the driver's door or fasten the driver's seat belt.
- Follow the system's instructions.
  Your face is scanned. A message in the driver's display or central display shows whether facial recognition was successful or not. You can unlock your user profile and protected applications with the facial scan.

Deleting biometric data

- Tap on 🗑 behind Facial Recognition.
- Select Yes.

Calling up the set-up assistant

- Select Profile.
- Select Set-up Assistant.
- Follow the directions from the set-up assistant.

Changing user name or profile photo

- Select Profile.
- Select Change User Name.

or

- Select User Image.
- Enter the user name or select a user image.
- Select Finish.

ⓘ You can store your photo in the Mercedes me user account using the app or in the portal. The photo will then be shown in the vehicle. In the vehicle itself, you can select other sample images instead of the photo.

Deleting a user profile

- Select Profile.
- Select Remove.
- Select Remove User Profile.

ⓘ Your Mercedes me user account and your personal data will remain within the Mercedes me ecosystem.

Resetting the user profile to factory settings

- Select Profile.
- Select Reset.
- Select Yes.

ⓘ You are only resetting the user profile to the factory settings; none of the other system settings in the vehicle are changed.

You can watch an animation on this topic via the following link:

Selecting a user

Multimedia system:



ⓘ When you call up your driver profile, the driver's seat and the steering wheel can be set.

You can cancel the setting process with the following actions:

- Press Tap Here to Cancel message on the central display.
- Press one of the seat operating buttons in the driver's door.

- Select Select User.
- Select a user.

▶ When requested to do so, authenticate with the Mercedes me PIN or a taught-in biometric characteristic.
The user profile is loaded and activated.

ⓘ If you select Continue Without Selecting a User, no specific settings for the user profile are loaded.

Synchronizing user profiles

Requirements

- You have a Mercedes me user account.
- The vehicle is connected with your Mercedes me user account.
- A user has been selected.

Multimedia system:

↪ ⌂ » 👤 » Settings » Profile Synchronization

▶ Activate Synchronize Automatically.
When the vehicle is switched on or off, the data stored in the vehicle is automatically synchronized with the Mercedes me user accounts. This synchronization is done for all user profiles and is not profile-specific.

or

▶ Select Synchronize Now.
After selecting this option, the data stored in the vehicle is synchronized with the Mercedes me user accounts.

ⓘ Not all user profile functions are available during synchronization.

ⓘ If the personalization service in the vehicle is deactivated, only the following user profile master data is synchronized:

- Profile name
- Profile image
- Mercedes me PIN

Notifications Center

Overview of the Notifications Center

The following communications are collected in the Notifications Center:

- Communications which are generated by the vehicle or from the multimedia system.
- Communications which are received through the use of services.

The following notification types are available for you:

- Navigable destinations and routes
- Messages (text messages)
- System information, e.g. Important Software Update Available Confirm to Start the Update
- Other notifications, e.g. from additional online services that can be subscribed to or emergency reports (e.g. tornado)

The Notifications Center is in the Control Center.

Depending on the style set, newly received notifications are shown using a colored dot.

Notifications are normally briefly shown as they are received. If you take no action, these are stored for future access in the Notifications Center.

The notifications are sorted chronologically. The most recent notifications are at the top.



Example of a message

1. Calls up the Notifications Center
2. Symbol for a pinned notification
3. Time message received
4. Calls up the settings
5. Notification
6. Description of the notification and the issuing service
7. Symbol for notifications
8. Date of the notification received

Depending on the type of notification, up to four different actions are available. If available these are shown as symbols.

Examples of actions include:

- Reading aloud
- Placing a call
- Replying
- Calling up a web page
- Navigation

Some notifications, e.g. a navigation destination, are stored longer. Therefore, it is not necessary to carry out available actions directly upon receipt of the notifications. A route guidance can be started at a later time.

You can pin a notification so that this is not deleted automatically after a certain time. The notification is then denoted by symbol 2.

Calling up notifications

Opening the Notifications Center

▶ In the zero layer pull down bar 3 in the center of the status line (→ page 371).

or

▶ In the home screen pull down bar 4 in the center of the status line (→ page 375). The Control Center opens.

▶ Select in the Control Center.

Selecting a notification

▶ If several messages are available swipe up or down.

▶ Select an action.

Closing the Notifications Center

▶ Select .

Selecting actions for a notification

The following options are available:

- Select the action directly after a notification is received and shown.

- Select the action later after calling up in the Notifications Center.

▶ Up to two actions available: select the action.
▶ More than two actions available: select [<].
▶ Select the action.
The notification is still available.
▶ Close the actions with [>].

Editing notifications

▶ Call up the Notifications Center (→ page 384).

Configuring settings

▶ Select [⚙] Settings.
▶ Select the service.
▶ Switch the options on or off.
The following options are available depending on the service:
- Allow Notifications
- Display in Notification Center
- Show Notifications
- Switching Acoustic Signals on or off
- External Access
The option allows an external service access to specific data, e.g. the current vehicle position. The detailed, approved information is shown with ⓘ.

If Allow Notifications is switched off, the options cannot be selected with the exception of External Access.

Pinning a notification

▶ Drag a notification to the right on the touchscreen.
A pin appears.
▶ Tap on the pin.
The notification is marked with a pin.

Deleting notifications

▶ Drag a notification to the left on the touchscreen.

or

▶ Select [🗑].
▶ Select Yes.
All messages are deleted.

Switching the sound for the MBUX multimedia system on or off

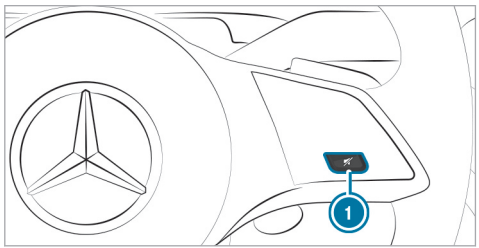

On the steering wheel

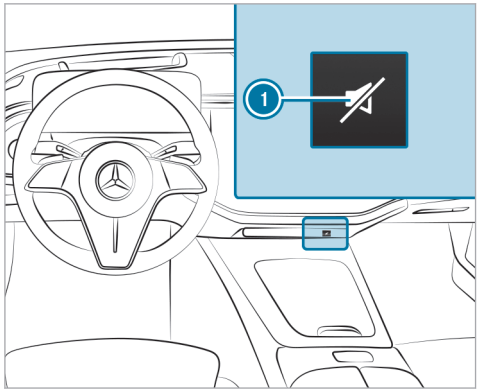

On the control panel when equipped with MBUX Hyperscreen

▶ **To switch off:** press button 1.
The current audio source is muted.
The [symbol] symbol appears in the status line of the central display.

If you are listening to a radio station, for example, and switch off the sound then all media sources will be muted.

Traffic and navigation announcements can still be heard in this case. The MBUX voice assistant and telephony are also not affected.

Switching on

▶ Press button 1 again.

or

▶ Set the volume.

or

▶ The media source changes.

Setting the volume of the MBUX multimedia system

Setting with the button

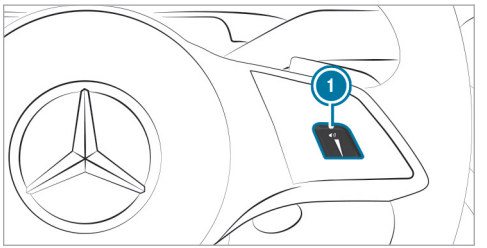

On the steering wheel

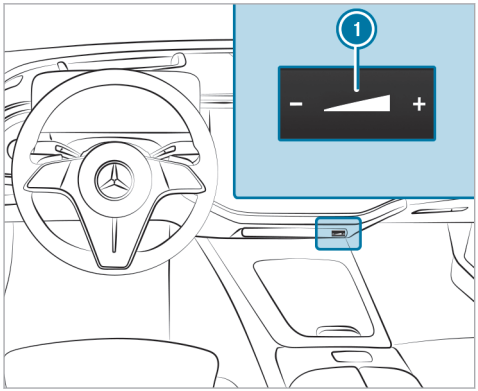

On the control panel when equipped with MBUX Hyperscreen

▶ Press – or + 1.

or

▶ Swipe across button 1.
The volume of the current audio source in the foreground is set.

Using the control, the volume is adjusted for the following groups:

- Entertainment
- Ringtone
- Calls, for example phone calls
- Voice output, for example MBUX voice assistant
- Navigation announcements

ⓘ If you set the volume of the voice output to "0", for example, a minimum volume is automatically set when the MBUX voice assistant is next called up. The entertainment volume is automatically adjusted after the multimedia system is restarted.

Setting in the menu

▶ Press and hold the ⌂ button on the right of the steering wheel.

or

▶ Press and hold ⌂ on the touchscreen.
The home screen appears.
▶ Select Settings.
▶ Select System.
▶ Select Audio.
▶ Select a volume setting.

ⓘ The volume can be set for all groups except the entertainment volume.

▶ Set the volume.

The following settings are also available in the Assistance menu:

- Switching the navigation announcements on or off during a phone call.
- Reducing the entertainment volume while a navigation announcement is being issued.

Entering characters

Using the character input function

You can enter the characters on the Touch Control or on the touchscreen. Character input can be started with a control element and resumed with another.

▶ When the keypad is shown, enter the characters by swiping and pressing on the Touch Control or by tapping on the touchscreen.

Examples for character entry include the entry of a navigation destination or a message.

Entering characters on the touchscreen

Requirements

- An online connection is required for some functions.

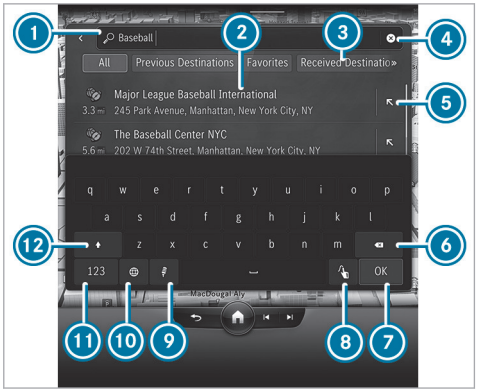

Example: character input with the keypad

1. Input line with current entry
2. Search result
3. Selects destination input, displays further destination inputs with double arrow
4. Deletes an entry
5. Adopts the search result in the input line and continues the search
6. Deletes the last character entered
7. Hides the keypad
8. Switches to further entries
9. Starts the MBUX Voice Assistant (→ page 360)
10. Sets the written language
11. Switches to digits and special characters
12. Switches to upper-case or lower-case letters

- ▶ Example: call up the navigation and enter a destination address (→ page 32).
- ▶ Briefly press on a character.
  The character is entered in input line (1).
- ▶ Resume character input.

ⓘ The available editing functions depend on the editing task, the language set and the character level.

Entering alternative characters

- ▶ Press and hold on a character.
- ▶ Select the character.

Finishing character entry

- ▶ Tap on (7) and hide the keyboard.

F214 0032 13

Setting the keyboard for character entry

Requirements

- The read-aloud function is available for the selected system language.

Multimedia system:

↴ ⌂ ⏩ Settings ⏩ System ⏩ Keyboard

Setting the keyboard language

- ▶ Select Keyboard Languages.
- ▶ Select one or more keyboard languages.

Deleting the user dictionary

The user dictionary learns from your inputs and offers suggestions during character input. You can reset the user dictionary.

- ▶ Select Reset My Dictionary.
- ▶ Select Yes.

MBUX Interior Assistant

Notes on lasers and laser classification

⚠ **WARNING** Risk of injury from the camera's laser radiation

This product uses a classification 1 laser system. If the housing is opened or damaged, laser radiation may damage your retina.

- ▶ Do not open the housing.
- ▶ Always have maintenance work and repairs carried out by a qualified specialist workshop.

This product complies with the requirements of the FDA 21 CFR 1040.10 and 1040.11 with exception of the variations according to the FDA Laser Notice No. 50 from 24. June 2007.

ⓘ The camera records image data for the applications, for example body, head and hand detection.
The camera converts the image data directly into meta data. No image data is saved in the process. The data is processed in the vehicle and is not transmitted from the vehicle.

When you start the vehicle, the MBUX Interior Assistant is activated automatically. You can switch the Interior Assistant on or off (→ page 394).

Overview of the MBUX Interior Assistant

The MBUX Interior Assistant detects the front vehicle occupants via 3D laser cameras in the overhead control panel. The Assistant interprets natural hand, head and body movements contextually or upon the explicit request of the driver or front passenger. The Assistant can thus automatically trigger vehicle interior functions and assist appropriately to the situation.

The assistant recognizes driver and front passenger interactions.

The applications are available under the following conditions:

- The MBUX Interior Assistant is activated (→ page 394).
- The MBUX multimedia system is activated.

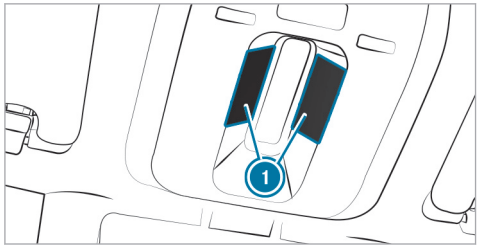

Cameras (1) are located in the overhead control panel.

The Assistant supports vehicle and infotainment functions at three interaction levels:

- INTELLIGENT

  The assistant recognizes vehicle occupants and objects automatically and activates functions.
- REACTIVE

  The assistant recognizes the natural body language of a vehicle occupant and carries out functions automatically, appropriate to the situation.
- CONTACTLESS

  The vehicle occupant actively requests a function using a hand movement.

The Assistant offers functions for the following:

- SAFETY

  The Assistant supports vehicle occupants with the use of restraint systems.
- COMFORT

  The Assistant enhances comfort by automating functions inside the vehicle and supporting natural interaction with the vehicle.
- INFOTAINMENT

  The Assistant facilitates operation of the Infotainment functions.

System limits, display messages and notes for rectification

ⓘ System limits that only apply to one application are described in the corresponding section.

The fault messages are shown on the central display, for example.

The system may be impaired or may not function in the following situations:

- The camera in the overhead control panel may heat up due to operating conditions. As a result the camera may switch off temporarily, particularly during longer periods of operation and at high outside temperatures.

  Do not touch or cover the camera. Wait until the camera has cooled down and is available again.

  The Interior Assistant Unavailable Further Information to Follow message appears.

  You receive a message when the camera is available again.
- The camera is covered, dirty, fogged up or scratched.

  Wait until the camera has cooled down before cleaning the camera cover.

  The Currently Unavailable See Operator's Manual message appears.

  Clean the outside of the camera cover with a dry or damp cotton cloth. Do not use micro-

fiber cloths. Do **not** remove the cover when cleaning.

- A vehicle occupant is very large. Clothing being worn (gloves, hat, scarf, color of clothing) or objects carried on a person, for example a watch with a large display, can affect the camera view. Or the detection range of the camera is restricted.

The Interior Assistant availability for the driver is limited, see Operator's Manual message appears.

Keep the camera's field of vision clear.

Objects in the detection range of the camera can restrict the camera view. Please make sure that no objects hang on the inside rear-view mirror, for example.

- The MBUX Interior Assistant is faulty.

  The Interior Assistant Not Available. Please contact your Mercedes-Benz dealer. message appears.

  Visit an authorized Mercedes-Benz Center.

The three types of interaction:

Type of interaction	Description and example of application
INTELLIGENT	The Assistant detects the presence of vehicle occupants and objects. Depending on the situation, functions are carried out automatically. Example of application: prompt about fastening the child seat (safety)
REACTIVE	The natural body language of a vehicle occupant, e.g. a hand or head movement, is recognized and triggers a function implicitly. Example of application: switching the search light on or off (comfort)
CONTACTLESS	The vehicle occupant triggers a function by actively demanding this with a hand movement. Example of application: opening and closing the sliding sunroof and roller sunblind (Comfort)

You can watch an animation on this topic via the following link:

Notes on fastening the child seat (SAFETY/intelligent)

The MBUX Interior Assistant detects child restraint systems on the front passenger seat. If a child restraint system is not fastened, e.g. a rearward-facing child seat, a message appears on the central display.

The function assists you in making sure that a child restraint system is secured with the seat belt on the front passenger seat.

ⓘ For further information on securing a child restraint system with the seat belt on the front passenger seat .

ⓘ The MBUX Interior Assistant cannot check whether the child is correctly restrained in the child restraint system.

Switching the reading light on or off (COMFORT/contactless)

Requirements

- The driver's and front passenger's hand movement takes place under the inside rearview mirror.

A brief movement of the hand up and down, switches the reading light on or off.



Carrying out operation of the reading light for the driver and front passenger

▶ Move your hand up and down under the inside rearview mirror.
The reading light is switched on or off.

F214 0032 13

ⓘ Further information on switching the reading lamps on and off (→ page 210).

Switching the search light on or off (COMFORT/reactive)

Requirements

- The function is available in the vehicle when it is dark.
- The front passenger seat is not occupied or a child is sitting in a child restraint system.
- The hand movement is made by the driver in the interaction area above the front passenger seat.

The function enhances the comfort in the vehicle interior.

Stretching out a hand over the front passenger seat switches a search light on automatically for the driver when it is dark. Pulling the hand back switches the search light off again.

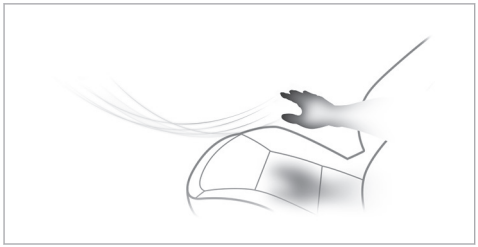

Interaction area for activation of the search light

Automatic preselection of the outside mirrors (COMFORT/reactive)

Until now, to set the outside mirrors the desired mirror had to be selected using a preselection button in the driver's door.

With the MBUX Interior Assistant, the mirror to be set is preselected automatically by the natural movement of your head to the left or right. When the hand touches the button for adjusting the outside mirror, the LED under the button of the preselected mirror side lights up.

Use the button to set the position of the active outside mirror.

ⓘ Preselection of the outside mirrors using buttons is still possible. Further information on adjusting the outside mirrors (→ page 216).

ⓘ The driver camera is also used for this application.
Further information on the driver camera (→ page 394).

ⓘ This function is not supported if the MBUX Interior Assistant is not available.

Opening or closing the roller sunblind on the rear window (COMFORT/reactive)

Requirements:

- The vehicle is equipped with a roller sunblind for the rear window.
- Reverse gear is engaged.

If the driver glances back over their shoulder in the direction of the rear window, the roller sunblind opens automatically.

If the roller sunblind was closed before backing up, it will be closed automatically in the following situations:

- Park position P is selected.
- The vehicle exceeds a minimum speed when moving forward.

The function facilitates a good view when backing up, e.g. when parking, and reduces the number of operating steps.

ⓘ Further information on opening and closing the roller sunblind on the rear window (→ page 158).

ⓘ This function is not supported if the MBUX Interior Assistant is not available.

Selecting settings for the MBUX Interior Assistant

Multimedia system:

→ ⌂ ▸▸ Settings ▸▸ System ▸▸ Intelligent Assistance

Switching the MBUX Interior Assistant on or off

- Activate or deactivate the Assistant.
  If the Assistant is activated, full functionality is used.

Driver camera

Overview of the driver camera

WARNING Risk of injury from infrared radiation from the camera

This product uses an infrared lighting system of risk group 0 (RG0). If the housing is opened or damaged, infrared radiation may damage your retina.

- Do not open the housing.
- Always have maintenance work and repairs carried out by a qualified specialist workshop.

This device is a product of risk group 0 (RG0) according to IEC 62471: 2006 (First Edition) & DIN EN 62471: 2008.
Depending on the equipment, the driver camera is located either in the driver's display or in the nozzle strip.

Depending on the equipment, the driver camera is either a mono or a stereo camera.

The driver camera detects the following characteristics:

- Head position
- Viewing direction
- Eyelid closure characteristics
- Driver's face

ⓘ The driver camera is automatically activated each time the vehicle is opened with the key. The current status of the driver camera is shown in the status line of the central display.

ⓘ The driver camera records image data for applications such as ATTENTION ASSIST and facial recognition, for example.
The driver camera converts the image data directly into meta data. No image data is saved in the process. The data is only processed in the vehicle and is not transmitted from the vehicle.

The driver camera must be set up for facial recognition before use (→ page 381).

System limits

The system may be impaired or may not function in the following situations:

- The driver camera is covered or dirty, fogged up or scratched.
- The driver's face and/or eyes are covered.
- The driver is wearing glasses that block infrared.

Display messages

In the following situations display messages may be shown:

- If the driver camera is not functioning.

The driver camera is malfunctioning.

The Driver Camera Inoperative See Operator's Manual message appears.

- If the driver camera's view of the driver is blocked due to the current steering wheel and seat position.

  The Change the steering wheel/ seat position until 6 dots are visible on the upper edge of the screen. message appears.

- If the view of the driver camera is reduced or restricted.

  The The camera view of the driver is currently obstructed Affected functions: See operator's manual message appears.

  The message can appear, for example, in the following cases:

  - The camera's view is obstructed, e.g. due to a scarf or hat being worn.
  - The driver is wearing glasses that block infrared.
  - If hair partially obstructs the eyes, e.g. as with a long fringe.
  - In the event of strong direct sunlight. The driver camera cannot detect the driver's eyes if the light-dark contrast is too strong.
  - When one hand or both hands are on top of the steering wheel (twelve o'clock position).

Notes on care

Please comply with the notes on caring for the interior relevant to the display (→ page 517).

Switching the driver camera on or off

Multimedia system:

↴ ⌂ ▸▸ Settings ▸▸ System ▸▸ Intelligent Assistance

The driver camera is automatically activated each time the vehicle is switched on.

▶ Select On or Off.

When the driver camera is switched off or the The camera view of the driver is currently obstructed Affected functions: See operator's manual message appears, the following functions are not available or limited:

- The 3D driver display (only for stereo camera) (→ page 348)
- The microsleep and distraction detection function of ATTENTION ASSIST (→ page 280)
- The facial recognition

  This function serves as sensor input for authentication and unlocking of the user profile and protected applications (→ page 381).
- The mirror preselection

  This function allows the natural movement of the head to the left or right to automatically preselect the outside mirror to be adjusted (→ page 216).

System settings

Display

Configuring display settings

Multimedia system:

→ ⌂ ⏩ Settings ⏩ System ⏩ Displays and appearance

Adjusting the brightness

- ▶ Select Display Brightness.
- ▶ Vehicles with a driver's display and central display: Adjust the display brightness of the driver display or central display.
- ▶ Vehicles with the MBUX Hyperscreen: Adjust the display brightness of the driver display, central display or the front passenger display.

Switching the head-up display on/off

- ▶ Switch the head-up display on  or off .

Setting the decorative image for the front passenger display (vehicles with MBUX Hyperscreen)

ⓘ The function is country-dependent.

- ▶ Select Front Passenger Display Image.
  A selection of decorative images is displayed.
- ▶ Select the desired decorative image.

ⓘ The number of available decorative images is variable.

ⓘ If no user is logged in to the front passenger display and the front passenger display is switched on, the digital decorative image is visible.

Time and date

Setting the time zone

Multimedia system:

→ ⌂ ⏩ Settings ⏩ System ⏩ Time and Date

- ▶ Select Time Zone.
  The list of countries is displayed.

ⓘ If there are several time zones available in a country, these will be shown after the country is selected.

- ▶ Select a country and, if required, a time zone.
  The time zone set is displayed after Time Zone.

or

- ▶ Select the Automatic Time Zone entry from the country list.
  The time zone will be set automatically according to the vehicle location.

ⓘ The Automatic Time Zone option is available for vehicles with satellite reception.

Setting the time and date format

Multimedia system:

→ ⌂ ⏩ Settings ⏩ System ⏩ Time and Date ⏩ Set Format

- ▶ Select a time and date format.

Setting the time and date manually

Requirements:

- The vehicle does not have satellite reception.

Multimedia system:
→ ⌂ ▸▸ Settings ▸▸ System ▸▸ Time and Date

Setting the time

- ▶ Select Set Time.
- ▶ Set a time.
- ▶ Press OK to confirm.

Setting the date

- ▶ Select Set Date.
- ▶ Select a date.
- ▶ Press OK to confirm.

ⓘ On vehicles with satellite reception, the time and date settings are determined automatically based on the vehicle location and cannot be set manually.

Adjusting the time

- ▶ Select Adjust Time.
- ▶ Set a value.
- ▶ Press OK to confirm.

ⓘ The function is only available in vehicles with satellite reception.

Vehicle position

Switching transmission of the vehicle position on or off

Requirements

- A Mercedes me user account is available.
- At least one service is activated in the Mercedes me user account which has access to the transmitted position data.

ⓘ The function is country-dependent. For more information, consult an authorized Mercedes-Benz Center.

Multimedia system:
→ ⌂ ▸▸ Settings ▸▸ System ▸▸ Data Protection

- ▶ Activate or deactivate the Transmit Veh. Position function.

ⓘ Alternatively, you can also switch the function on or off in the status line via .

Setting permissions

Multimedia system:
→ ⌂ ▸▸ Settings ▸▸ System ▸▸ Data Protection ▸▸ Permissions

In the Permissions menu, you can set access authorization for various data points (such as microphone, camera) used in an application. You can change permissions that have already been granted here. You can set permissions either for individual data points or for certain applications or websites.

- ▶ Select Requests or Apps/Websites.
- ▶ Make the required settings for the permissions.

Bluetooth®

Information about Bluetooth®

Bluetooth® technology is a standard for short-range wireless data transfer up to approximately 32.8 ft (10 m).

You can use Bluetooth® to connect your mobile phone to the multimedia system and use the following functions, for example:

- Hands-free system with access to the following options:
  - Contacts (⟶ page 459)
  - Call lists (⟶ page 461)
  - Text messages (⟶ page 462)

Bluetooth® is a registered trademark of Bluetooth Special Interest Group (SIG) Inc.

Activating/deactivating Bluetooth®

Multimedia system:

↳ ⌂ ▸▸ Settings ▸▸ System ▸▸ Internet and Bluetooth

▶ Switch Bluetooth on or off.

Wi-Fi

Wi-Fi connection overview

You can use Wi-Fi to set up a connection to the Internet or to external network devices.

ⓘ The availability of the function is dependent on the country.

With regard to the Wi-Fi connection, you can choose between:

- **Using the multimedia system as a Wi-Fi hotspot** (⟶ page 398)

  The multimedia system in the vehicle serves as a Wi-Fi hotspot for mobile communication devices such as a smartphone or tablet PC.

- **Using a mobile communication device as a Wi-Fi hotspot (tethering)** (⟶ page 483)

  An external Wi-Fi hotspot is accessed for the Internet connection of the vehicle's multimedia system.

Switching Wi-Fi on or off

Multimedia system:

↳ ⌂ ▸▸ Settings ▸▸ System ▸▸ Internet and Bluetooth

▶ Select Wi-Fi.
The controller is to the right: Wi-Fi is switched on.

When Wi-Fi is switched on, you can connect the multimedia system with external hotspots or make it available as a hotspot for external devices.

When Wi-Fi is switched off, it is not possible to establish a hotspot connection.

ⓘ The availability of the function is dependent on the country.

Using the multimedia system as a Wi-Fi hotspot

Requirements

- The device to be connected supports at least one of the types of connection described.

  The connection types shown depend on the device to be connected. The function must be supported by the multimedia system and by the device to be connected. The type of connection must be selected on the multimedia system and on the device to be connected.

ⓘ The data volume of the vehicle or an already connected tethering device is used for the data connection.

Vehicle data volumes: depending on the vehicle equipment, you can purchase a data package directly from a mobile phone network provider via the Mercedes me Store. To be able to use the data package, you conclude a separate contract with a mobile phone network provider via the Mercedes me Store, which can be terminated at any time and for which there are no costs. This contract is a prerequisite for using the services from the previously purchased package. The availability of this option is dependent on the country.
If the data package option is not available or can be upgraded, you can purchase data volume directly from the mobile phone network provider for a fee.

ⓘ Some functions may first need to be activated on the device being connected. More detailed information can be found in the manufacturer's operating instructions.

ⓘ The use of the vehicle data tariff by external devices is not available in all countries.

Multimedia system:
↪ ⌂ ▸▸ Settings ▸▸ System ▸▸ Internet and Bluetooth

- Select MBUX Hotspot.
- Select one of the following connection options.

Connecting using a QR code

Requirement: an app for scanning the QR code is installed on the device being connected.

Alternatively: the device being connected has an integrated QR code scanner (see manufacturer's operating instructions).

- Scan the QR code shown.
The Wi-Fi connection is established.

Connecting using a security key

- Select the vehicle from the device to be connected. The vehicle is displayed with the MBUX XXXXX network name.
- Enter the security key which is shown in the central display on the device to be connected.
- Confirm the entry.

Generating a new security key

- Select the Generate New Security Key option in the MBUX Hotspot menu.
- Confirm the prompt with Yes.
A new security key is generated.

A connection will be established with the newly created security key.

ⓘ When a new security key is generated, all existing Wi-Fi connections are then disconnected. If the Wi-Fi connections are being re-established, enter the new security key.

System language

Notes on the system language

This function allows you to determine the language for the menu displays and the navigation announcements. The selected language affects the characters available for entry. The navigation announcements are not available in all languages. If a language is not available, the navigation announcements will be in English.

Setting the language

Multimedia system:

→ ⌂ ›› Settings ›› System ›› Language

Setting the system language

A list of the available system languages is shown.

- Select a language.
  The system language is switched to the selected language.

Setting the distance unit

Multimedia system:

→ ⌂ ›› Settings ›› System ›› Displays and appearance

ⓘ This function is not available in all countries.

- Select a unit for the distance.
- Activate Additional Speedometer for an additional display in the driver display.

Activating/deactivating system PIN protection

Multimedia system:

→ ⌂ ›› Settings ›› System ›› Data Protection ›› PIN Protection

Setting the system PIN

- Select Set PIN.
- Enter a four-digit system PIN.
- Enter the four-digit system PIN again.
  If both system PINs match, then the system PIN protection is active.

Changing the system PIN

- Select Change Settings.
- Enter the current system PIN.
- Select Change PIN.
- Set a new system PIN.

Switching system PIN protection for software updates on or off

- Select Protect Software Updates.
- Activate or deactivate the function.

Configuring suggestions

Multimedia system:

→ ⌂ ›› Settings ›› System ›› Suggestions

- Activate or deactivate Learning & Suggestions.
  If the user profile is active and the function is switched on, personalized suggestions can be derived for activated applications.
- Select ⚙.
- Switch the options on or off individually.
  If an option is switched on and sufficient data has been gathered, personalized suggestions based on your user behavior will be offered to you. These are, for example, navigation destinations visited, phone numbers dialed as well as suggestions based on your music preferences.

  Navigation

  When Allow Destination Suggestions is switched on, the vehicle makes suggestions based on your visited navigation destinations.

If Activate Commuter Route is switched on, the navigation automatically detects that the vehicle is on a commuter route.

Calls & Messages

Suggestions are offered for numbers dialed and messages sent.

Comfort

The vehicle makes suggestions based on the use of your comfort functions, e.g. which massage program should be started when.

Entertainment

Suggestions are offered for the currently played media source. Suggestions are also made for online digital services, e.g. Spotify, TuneIn Radio and streaming services, and for categories, e.g. genre, artist and mood.

Climate Control

The suggestions for quick temperature adjustment in the vehicle are displayed.

Vehicle

The suggestions for vehicle functions are displayed, e.g. for Parking Assist PARKTRONIC and for opening the trunk.

Online Voice Services

The suggestions are made available online based on your voice input and are offered on the zero layer.

ⓘ The suggestions offered depend on the equipment.

Deleting collected suggestions

Multimedia system:

→ ⌂ ⏩ Settings ⏩ System ⏩ Suggestions

▶ Select ↺.

▶ Select Yes.
The suggestions are reset.

Software update

Information on software updates

Software updates keep your vehicle and the related systems up-to-date and prevent security flaws.

Software updates are available for vehicle components such as control units, convenience systems, locking and safety systems, driver assistance systems, suspension and drive systems as well as for the MBUX multimedia system. Software updates are available via the communication module or a Wi-Fi connection to an external hotspot.

The navigation maps are also updated via updates from external storage media (e.g. USB flash drive).

Install available software updates regularly. Otherwise the security of your MBUX multimedia system and individual vehicle components cannot be ensured.

ⓘ Software updates can be protected with a system PIN. Further information about the system PIN (→ page 400).

Further information about software updates can be found at https://me.secure.mercedes-benz.com.

Carrying out software updates

Requirements

For software updates via the communication module and WLAN:

- Your vehicle is linked to a Mercedes me user account (→ page 474).

- Software updates without Mercedes me user account: The Allow Software Updates option is activated in the Software Update menu.
- For software updates via the communication module: an Internet connection exists via the communication module (→ page 481).
- For software updates via WLAN: a connection to an external WLAN hotspot exists (→ page 483).

ⓘ Depending on the software update, this is started via the communication module, WLAN or external storage medium.

ⓘ Online software updates cannot be performed via external WLAN hotspots that are encrypted via TKIP.

ⓘ If the WLAN hotspot requires logging in via the browser, once the connection is successfully established the browser will open in order to start the update. To start the download follow the instructions in the browser.

Multimedia system:
→ Home ▸▸ Settings ▸▸ System ▸▸ Software Update ▸▸ Settings

Starting a map update from an external storage medium

▶ Connect the storage medium with the vehicle via a media interface.
A message about an available map update appears on the central display.

▶ Select the message.

▶ Select Start.
The map update is started.

Starting the software update via the communication module

If the Automatic Online Update option is active, available software updates are downloaded and installed automatically. Activate the option in order to always keep your vehicle up-to-date and avoid security flaws.

▶ Select Automatic Online Update.
The software update is downloaded and installed automatically.

If the option is deactivated, you will be informed of new software updates once. The updates are available for downloading for a limited period of time.

▶ Select an update from the list of available updates.

▶ Start the update.
The software update is downloaded and installed automatically.

Starting a software update via WLAN

Some software updates require an additional connection to a WLAN hotspot. The connection to an external hotspot can be established when the software update is started.

▶ Select an update from the list of available updates.

▶ Start the update.

▶ Establish the connection to a WLAN hotspot.
The update is downloaded and installed automatically.

For software updates requiring a safe vehicle status: when the last installation step is reached, a message appears on the central display after the

vehicle is switched off. Follow the step-by-step instructions on the central display to complete the installation.

There are software updates that can only be installed when the vehicle is safely parked, there are no more people in the vehicle and the vehicle is locked.

Installing software updates

Software updates are installed automatically after they are downloaded. As soon as the software update has been completed, a message appears in the central display. It may be necessary to restart the MBUX multimedia system.

Some software updates require a safe vehicle status for the installation to be completed. They can only be carried out in a safely parked vehicle with the vehicle switched off. If this is necessary, a message appears on the central display after the vehicle is switched off.

▶ Follow the instructions on the central display.

For some software updates, you can set a time for installation. The installation is carried out automatically at the scheduled time. You do not need to be in the vehicle during installation. Note that the planned installation is canceled as soon as the vehicle door is opened.

If an installation is available where you can set the time, a message appears on the central display after the vehicle is switched off.

▶ Follow the instructions on the central display.

The vehicle cannot be used while these software updates are being installed. Make sure that no persons or animals are in the path of your vehicle. Events stored in the vehicle's control units can be overwritten.

Availability of the driver and central display

During the installation of software updates, it is not possible to use the vehicle, driver display and central display. You may receive the following display messages when an installation is running:

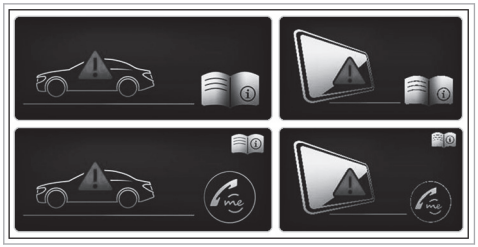

ⓘ The display message does not appear every time a software update is installed.

In rare cases, an error can occur during the installation. The multimedia system automatically attempts to restore the previous version.

If it is not possible to restore the previous version, the display message shown above appears every time the vehicle is started.

Failure of the driver display:

If the driver display fails or there is a malfunction, you may not recognize limitations in the functions of systems relevant to safety or the speed display, for example. The operating safety of the vehicle may be impaired. Drive on carefully and have the

vehicle checked at a qualified specialist workshop immediately (→ page 723).

Further information about software updates can be found at https://me.secure.mercedes-benz.com.

Failure of the central display:
If the central display fails or the display message shown above is shown continuously, several systems such as the rear view camera, PARKTRONIC or climate control are no longer available. Drive on carefully and consult a specialist workshop as soon as possible.

Front passenger display failure (only vehicles with MBUX Hyperscreen):
If the front passenger display has failed or a display message appears permanently, functions and systems are no longer available via the front passenger display. Visit a qualified specialist workshop.

Resetting the multimedia system (reset function)

WARNING Risk of accident due to failure of central display functions

While the multimedia system is reset, its functions, such as the rear view camera, are not available.

▶ Only reset the multimedia system when the vehicle is stationary.

Requirements:
- The vehicle is switched on.
- Some settings can only be reset when the vehicle is stationary.

Multimedia system:
↪ ⌂ ▸▸ Settings ▸▸ System ▸▸ Reset

When resetting the system, personal data and settings are deleted, for example:
- Connected devices
- Individual user profiles
- Biometric data

ⓘ The data used and saved in the multimedia system by the driver assistance systems is deleted.

▶ Select Reset.
A query appears asking if the system should really be reset.

▶ Select Yes.
The multimedia system is reset to the factory settings. The multimedia system is restarted after the system reset.

ⓘ Due to data protection, as well as the function of individual driving systems and driving safety systems, it is a requirement to carry out a complete system reset before selling the vehicle or transferring it to a third party, or after use as a hire car.

AMG TRACK PACE

Function of AMG TRACK PACE

ⓘ This function is an on-demand feature (→ page 81).

With AMG TRACK PACE, the driving characteristics on race tracks can be analyzed and opti-

mized. You can drive previously saved race tracks (e.g. Hockenheimring), or record and save new tracks. The driven lap times are stored for every track. These can be analyzed and compared to other lap times to achieve the best possible race results. Additionally, acceleration and braking procedures can be measured and stored.

Note: Use AMG TRACK PACE only on closed-off tracks away from public roads. Adapt your driving style to your personal performance and the environmental conditions. As the driver, you are solely responsible for driving your vehicle. Park your vehicle safely before operating the application.

Setting Track Race

Multimedia system:

TRACK PACE ▸▸ Track Race

Recording a new track

- Select New Track .
- Select Start Record. at the desired starting point.
  Track recording will start at this point.

During track recording, sectors can be set to divide up the track.

- Select Set Sector.
- Select Stop Recording to end track recording or cross the start line again.
- Confirm the prompt with Yes.
- Select the weather.

ⓘ The temperature will be determined automatically.

- Enter a name.
- Press OK to confirm.
  The track will be saved under the name entered.

Searching by track name

- Select Search .
- Enter the desired track name.
  Tracks with the name that you have searched for will be displayed.

Measuring time on a saved track

- Select All tracks.
- Select the desired track.
- Select ●●●.
- Select Start Time Recording if you are already at the start line.

or

- Select Navigate to to navigate to the start line.

Timekeeping will begin automatically when you cross the start line.

ⓘ When AR is selected, the track display can be switched to AR. In addition, it is possible to switch to the telemetry display by selecting .

- Select Stop timekeeping to end timekeeping.
- Confirm the prompt with OK.
- Select the weather.
- Select Yes to save the times set for this track.

Showing readings during Track Race

The following readings can be shown:

- Tire temperature

- Miniature map
- Sector overview
- G-force display
- Lap overview

▶ Select Start Time Recording .

▶ Select .

▶ Drag the desired display from the grid to the left or right edge of the central display.
The readings will be shown during Track Race.

You can deactivate this by selecting × on the active display.

Displaying the analysis

▶ Select All tracks.
An overview of all the tracks you have driven will appear.

▶ Select a track.

▶ Select a session.
The following data will be displayed:

- Lap and sector times
- Average and top speed
- Driver
- Vehicle
- Date
- Weather

▶ Select Add Recording to use a different session as a reference value.

▶ Select to return to the overview.

▶ Select Diagram.

▶ Set the desired parameters.
The analysis will be displayed.



1. Lap overview
2. Parameter overview
3. Editing parameters
4. Deleting parameters
5. Adding new parameters

ⓘ The following values can be set for the parameters, for example:

- Speed

- Longitudinal/lateral acceleration
- Steering angle
- Engine speed
- Engine oil/tire temperature

Based on the analysis, you can check and optimize driving characteristics for any position on the track.

Exporting tracks (USB)

- Select Tracks.
  An overview of all stored tracks will appear.
- Select the desired track.
- Select options for the desired track.
- Select Export Track to....
  The selected route will be exported to the USB memory device connected to the vehicle.

Editing tracks and recordings

- Select Tracks.
- Select the desired track.
- Select options for the desired track.
- Select Rename or Delete.

or

- Select a track.
- Highlight the desired recording.
- Select Options.
- Select Export to... or Delete.

Setting Drag Race

Multimedia system:

TRACK PACE ⏩ Drag Race

Measuring acceleration

- Select Drag race options.
- Select Acceleration.
- Set a starting speed or select Automatic.
  Measurement will begin as soon as the specified starting speed has been reached.
- Set a target speed.
  Measurement will stop as soon as the specified target speed has been reached.
- Start off and begin measurement.
  Measurement will begin when the vehicle accelerates.

You can stop measurement early by interrupting the acceleration procedure.

Quarter mile race

- Select Drag race options.
- Select Quarter Mile.
- Set a target distance.
  Measurement will stop as soon as the specified target distance has been reached.
- Start off and begin measurement.
  Measurement will begin when the vehicle accelerates. Timing will run until the target distance or a maximum of one mile has been traveled.

You can stop measurement early by interrupting the acceleration procedure.

Measuring braking

- Drag Race options
- Select Braking.
- Set a starting speed or select Automatic.
- Start off and begin measurement.

▶ Brake to a standstill.
Measurement is incremental, in steps of 6 mph (10 km/h) to a standstill. If the braking procedure is started e.g. at a speed of 98 mph (157 km/h), measurement will start as soon as 93 mph (150 km/h) has been reached.

Measured values
If measurement is completed or canceled, a prompt wioll appear asking whether the measurement should be saved.

▶ Confirm the prompt with OK to save.

Calling up saved measurements

▶ Select History.
▶ Select Acceleration, Quarter Mile or Braking.
▶ Select a measurement.
The desired measurement will be displayed in detail.

or

▶ Delete a measurement.

Calling up the telemetry display

Multimedia system:
TRACK PACE ⏩ Telemetry

The telemetry display shows current vehicle data as a digital value and as a diagram. Up to four parameters can be selected to be shown on the display.

For example:

- Engine speed
- Wheel angle
- Speed
- Steering angle

▶ Set the desired parameters.
▶ Set the time.
The set parameters are evaluated in the diagram for the time set.

Configuring AMG TRACK PACE

Requirements
To connect a mobile device to the TRACK PACE app:

- the TRACK PACE app is installed on the mobile end device.
- the mobile end device is connected to the multimedia system via Wi-Fi (→ page 398).

Multimedia system:
TRACK PACE ⏩ ⚙

Connecting a mobile device via the TRACK PACE app
The TRACK PACE app makes it possible to record videos and to synchronize them with stored tracks.

▶ Select TRACK PACE App.
▶ Select Authorize a New Device.
▶ Start the TRACK PACE app on the device to be connected.
▶ Select Continue and confirm the authorization prompt.
A four-digit code will be shown on the central display.
▶ Enter the code on your smartphone.
The device will be authorized.

De-authorizing the mobile device

- Select TRACK PACE App.
- Select a device.
- Confirm the message prompt with Yes.
  The device will be de-authorized.

Setting the TRACK PACE display on the head-up display and driver's display

- Select IC and HUD Contents.
- Activate or deactivate the desired content.
  The content on the head-up display and the driver's display will be adapted.

ⓘ Further information about the head-up display (→ page 356).

ⓘ Further information about the driver's display (→ page 348).

Setting acoustic feedback

- Select Acoustic Feedback.
  A scale with values from 0 to 10 will be shown.
- Select a setting.

Displaying statistics

- Select TRACK PACE Statistics.
  Statistics on the current user profile will be displayed.

  The following data will be displayed:
  - Driving time
  - Track driven
  - Tracks recorded
  - Track Races recorded
  - Laps recorded
  - Drag races recorded
  - Top speed

Activating the ambient light

If this function is active, the vehicle interior will be lit in red or green depending on your delta time.

- Select Ambient Light.
- Activate or deactivate the function.

Adjusting the dashcam

If the vehicle is equipped with a dashcam, it can be used in AMG TRACK PACE.

- Select Dashcam.
- Select Track Race or Drag Race and apply Activate Recording.
- Select the overlay for the video under Video Overlay Content.

Fit & Healthy

Setting ENERGIZING seat kinetics

Requirements:

ⓘ These functions are available only for fully electric seats with a memory function.

Multimedia system:

→ ⌂ ▸▸ Comfort ▸▸ Seat

- Select Seat Kinetics.

ENERGIZING seat kinetics can support back health by changing the seat position during a journey. This involves repeatedly stressing and relieving the muscles and joints by means of minor movements of the cushion and backrest.

Starting seat kinetics

- Select ▶ for the desired seat.
  The program will run for the set duration.

Configuring seat kinetics

- Select ⚙ for the desired seat.
- Select Backrest, Backrest and Seat Surface or Seat Surface.
- Select the desired duration for the selected seat.

Vehicles with a multicontour seat:

In addition to the seat backrest and seat cushion, the lumbar region can be activated for the function.

- Activate or deactivate Including Lumbar.

ENERGIZING COMFORT

Overview of the ENERGIZING COMFORT programs

You can watch an animation on this topic via the following link:

ⓘ Note that the available programs and the associated functions depend on your vehicle equipment. Depending on your equipment, fewer functions may be available.

Program overview

- **Refresh:** Can have a refreshing effect with short, cool puffs of air. The seat is ventilated, the vehicle interior is illuminated with cool colors and the program is completed with appropriate sound. In addition, the vibration massage in the cushions can loosen your muscles.
- **Warmth:** Can increase the comfort level of the vehicle occupants. Seat, surface and steering wheel heater provide soothing warmth. The program is completed with unobtrusive sound and warm colors.
- **Vitality:** Can counteract diminishing attentiveness in monotonous driving situations. The activating stimulation of the vehicle occupants is carried out with invigorating sound, activating light and a vitalizing massage.
- **Joy:** Can promote a positive mood in the vehicle occupants as well as mental regeneration. This results from the activation of a massage program, friendly sound and illumination with suitable colors.
- **Well-being:** Can help relax the vehicle occupants. This is achieved through a relaxing massage, friendly light and calming sound.
- **Forest Glade:** Can have a calming and soothing effect on the vehicle occupants thanks to the acoustics of the forest. The ambience is supported by a suitable animation, colors and sound.
- **Sounds of the Sea:** Can contribute to calming the vehicle occupants. The acoustics of wave sounds and seagulls in combination with other vehicle functions create a relaxing seashore atmosphere.
- **Summer Rain:** Can help relax the vehicle occupants. The relaxing effect of a rain shower can be experienced via acoustics and other vehicle functions inside the vehicle.
- **Anti-travel sickness (only front passenger):** Can help to prevent, mitigate or delay symptoms of travel sickness. The light, sound and animation are adapted accordingly. The air conditioning system and the seat cushion are

actively targeted. The effect can be enhanced by manually tilting the backrest back slightly. At the end of the program, the seat cushion and the seat backrest are automatically returned to their original position.

- **Power Nap:** The program consists of three phases.
  - Falling asleep phase: here relaxing music is played.
  - Sleeping phase: the active functions are deactivated or restricted as much as possible.
  - Waking phase: here slightly stimulating music is played. Additionally, functions such as seat ventilation and massage are activated.
- **Training:** Can counteract the onset of muscle tension, limbs falling asleep or stress with targeted relaxation or stimulation exercises. The exercises are demonstrated in short videos.

  The training consists of audio content and a brief animation. The audio content is conceived so that it can also be played back when you are driving. Animations are only shown when the vehicle is stationary. Always observe the traffic conditions if you are training when driving.
- **Tips:** The system gives auditory tips for possible exercises or measures for improving the comfort level of the vehicle occupants. By selecting the desired area of the body you can receive targeted tips for the comfort level of this area.

Most programs that have been started for one seat can also be transferred simultaneously to another seat.

Starting the ENERGIZING COMFORT program

⚠ WARNING Increased risk of accidents when using the ENERGIZING COMFORT programs Tips and Training

The Tips and Training ENERGIZING COMFORT programs can distract you when driving.

- ▶ Only carry out exercises if the traffic situation permits.
- ▶ When listening to the tips, make sure you are aware of the traffic around you at all times.

⚠ WARNING Risk of entrapment when using the ENERGIZING COMFORT program Power Nap

With the Power Nap ENERGIZING COMFORT program the following systems are moved automatically if required:

- Seats
- Side windows
- Sliding sunroof
- Roller sunblinds

This can cause you or another vehicle occupant to be trapped.

- ▶ Make sure that there is sufficient space behind the front seats.
- ▶ Make sure that no body parts are in the areas of movement.

WARNING Increased risk of injury in the event of an accident when using the Anti-Motion Sickness ENERGIZING COMFORT program due to the front passenger having an incorrect seat position

The Anti-Motion Sickness program is only available for the front passenger. Improper adjustment of the seat position increases the risk of injury in the event of an accident.

- When adjusting the seat backrest to a slightly flatter position, always maintain a basically upright sitting posture. Never adopt a reclining sitting posture while driving.
- Always ensure correct belt routing, especially in the shoulder and hip area. Observe the information on the protective potential of the restraint systems and the correct belt installation in this Operator's Manual.
- If necessary, correct the seat adjustment (fore-and-aft adjustment, backrest inclination). If in doubt, do not use a flatter backrest position.
- The responsibility for seat position and belt routing always lies with the vehicle occupant.

WARNING Increased risk of injury in the event of an accident when using the Anti-Motion Sickness ENERGIZING COMFORT program for the front passenger in conjunction with a child restraint system

The Anti-Motion Sickness program is only available for the front passenger. If the program is used improperly in conjunction with child seats and booster seats there is an increased risk of injury in the event of an accident.

- Ensure that no child seats or booster seats are installed on the front passenger seat.
- The program must not be used while a child restraint system is in use on the front passenger seat.

Requirements:

- The vehicle is switched on.

For the start of Power Nap:

- Only the power supply is on.
- The doors are closed.
- The vehicle is secured against rolling away.
- The state of charge of the high-voltage battery is sufficient for the use of the auxiliary climate control.

Multimedia system:

→ ⌂ » Comfort » ENERGIZING COMFORT

Starting and stopping a program

- Select a program.
- Select ▶ for the desired seat in order to start the program.
- Select ■ to stop the program.

ⓘ If, during an active program, a function requirement is no longer met, a corresponding message appears. The active program is canceled.

ⓘ Further information on occupant safety in connection with the anti-travel sickness program (→ page 96)

Starting a Power Nap

- Select Power Nap.
- Select ▶ for the desired seat in order to start Power Nap.

When the vehicle is stationary, the following actions are carried out when Power Nap is started:

- The roller sunblinds are extended.
- The doors are locked.
- The seats are moved into the fully reclined position.
- The parking brake is applied.

- Select ■ to stop the program.

Starting the training program

- Select Training.
- Select a program.
- Select ▶ for the desired seat in order to start the program.
- Select ■ to stop the training program.

ⓘ The animations demonstrating the exercises are faded out when the vehicle is in motion and you only hear the instructions.

Starting Tips

- Select Tips.
- Select an area of the body.
- Select ▶ in order to start Tips.
- Select ■ to stop playback of the tip.

ENERGIZING apps

Functions of the ENERGIZING App

Function of the ENERGIZING COACH

Requirements for use of the ENERGIZING COACH

- The ENERGIZING COACH service is activated in the Mercedes me portal or the Mercedes me App.
- The Mercedes me ENERGIZING App is installed on the mobile phone to use the service.

With ENERGIZING COACH you can evaluate the driving and driver situation. Depending on the situation, it offers recommendations for the start of an appropriate ENERGIZING COMFORT program.

The following programs could be suggested:

- Vitality

  As an activating program in monotonous driving situations or for long journey times, for example

  Information on the Vitality program see (→ page 410).
- Joy

  As a balancing program in demanding driving situations

  Information on the Joy program see (→ page 410).
- Freshness

  As a refreshing program when temperatures rise

Information on the Refresh program; see (→ page 410).

- Warmth

  As a warming program when temperatures drop

  Information on the Warmth program; see (→ page 410).

By connecting a Garmin fitness tracker, for example the Garmin vívoactive® 3, additional information can be entered into the evaluation for the recommendation of an ENERGIZING COMFORT program. The additional information includes the stress level, that is calculated by the fitness tracker. The stress level is based primarily on the pulse rate.

Requirements for the integration of additional information via a Garmin fitness tracker:

- Your fitness tracker is connected with your Garmin account.
- Your Garmin account is connected with your Mercedes me user account.

If you wear your Garmin fitness tracker at night also, the sleep data is included in the evaluation of the ENERGIZING COACH.

Requirement for the integration of the sleep data:

- The Garmin fitness tracker is synchronized with the Garmin account before the beginning of the journey.

ⓘ If ATTENTION ASSIST determines an excessive lack of attention, ENERGIZING COACH makes no further suggestions. Further information about ATTENTION ASSIST (→ page 282).

Calling up the ENERGIZING COACH display

Requirements:

- The fitness tracker is connected with your Garmin account.
- Your Garmin account is connected with your Mercedes me user account in the Mercedes me ENERGIZING app.
- The mobile phone is connected to the multimedia system (→ page 456).
- You are logged in with your Mercedes me profile both in the vehicle and in the Mercedes me ENERGIZING app.

Multimedia system:

→ Home ▸▸ Apps ▸▸ ENERGIZING COACH

Calling up the ENERGIZING Coach

▶ Your current pulse as well as an evaluation of your pulse for the last 30 minutes driving time are shown.
A corresponding malfunction message is shown if there is no mobile phone connected or no pulse can be sent to the system for an extended period.

ⓘ Only pulse values in the range of 30 - 140 (possibly 150) bpm are shown on the central display. The pulse values have no medical validity but are only informative in nature and are therefore also not required to be accurate.

Connecting a new device

▶ Select ⚙.

- Select Device Selection.
  A list of connected mobile devices will be shown.
- Select the desired device from the list.

Navigation and traffic

Switching navigation on

Multimedia system:

→ ⌂

- Alternatively, press the ⌂ button on the steering wheel on the right (→ page 377). The zero layer with the digital map is displayed.

Calling up the navigation module in the expanded view

Multimedia system:

→ ⌂ ▸▸ Navigation

ⓘ Navigation means: tap on navigation module ① on the zero layer (→ page 415).

The navigation module is called up in the expanded view and shows the route overview with additional functions.

- Select one of the functions (→ page 425).
  The following functions are available, for example:
  - Switch the traffic information display on or off.
  - Select Previous Destinations.
  - Search for Gas Stations.
  - Search for Parking Spaces.
  - Select Alternative Routes.
  - Enter a destination with 🔍.
  - Make settings for View, Messages & Acoustic Signals and Route with ⚙.

Navigation overview

Digital map



① Navigation module (reduced view)
Route guidance active:
The navigation module shows the information relevant to the route in the zoomed-out view, e.g. the arrival time at the destination or a traffic delay
⊗ Ends the current route guidance
Tapping opens the navigation module in the expanded view with the Route (→ page 425)

② Enters a destination

③ Searches for a parking space

④ Sets map orientation and map type
⑤ Current vehicle position (vehicle symbol or arrow)
⑥ Display area with entertainment sources, phone, active applications and suggestions
⑦ Navigation window shows the next driving maneuver in the reduced view when route guidance is active or an enlarged view with a detailed display of the upcoming driving maneuver when approaching a driving maneuver, e.g. a map section, 3D images or lane recommendations
When route guidance is active, tapping on the navigation window opens the route monitor, which shows information for the entire route, e.g. upcoming driving maneuvers, destinations, freeway exits or rest areas with points of interest
Switches off navigation announcements
Switches on navigation announcements

Pressing ④ several times changes the map orientation in this order:

- 2D and to the north
- 2D and in the direction of travel
- 3D and in the direction of travel
- Map with complete route

ⓘ If the map is moved, the map switches between 3D direction of travel and 2D north orientation.

Destination entry

Notes on destination entry

⚠ **WARNING** Risk of distraction from operating integrated communication equipment while the vehicle is in motion

If you operate communication equipment integrated in the vehicle when driving, you could be distracted from the traffic situation. This could also cause you to lose control of the vehicle.

▶ Only operate this equipment when the traffic situation permits.
▶ If you cannot be sure of this, stop the vehicle whilst paying attention to road and traffic conditions and operate the equipment with the vehicle stationary.

You must observe the legal requirements for the country in which you are currently driving when operating the multimedia system.

Entering a POI or address

Requirements

- **For the online search:**
  - There is an Internet connection.
  - Mercedes me connect is available.
  - You have set up a user account in the Mercedes me Portal.
  - The vehicle is connected with the user account and you have accepted the terms of use.
  - Further information can be found at: https://www.mercedes.me
  - The service is available.
  - The service has been activated at an authorized Mercedes-Benz Center.

ⓘ If Online Search is not available, the search is performed using the data of the digital map.

Multimedia system:

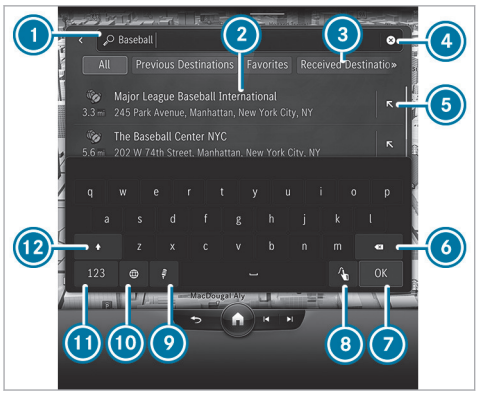

Example: entering a POI or address

① Input line with current entry
② Search result
③ Selects destination search, displays further destination searches with double arrow
④ Deletes an entry
⑤ Adopts the search result in the input line and continues the search
⑥ Deletes the last character entered
⑦ Hides the keypad
⑧ Switches to further entries
⑨ Starts the MBUX Voice Assistant (→ page 360)
⑩ Sets the written language
⑪ Switches to digits and special characters
⑫ Switches to upper-case or lower-case letters

▶ Enter a destination. The entries can be made in any order.
The search results are displayed in a list.

ⓘ Online search results for POIs may contain additional information, for example opening times and ratings. The information is provided by an online map service.
This online function is not available in all countries.

The following entries can be made, for example in ①:

- City, street, house number or street, city
- ZIP code
- POI name or POI category, e.g. Restaurants
- City, POI name
- Contact name
- Intersections in the following entry format: "road A" and "road B"
- Geo-coordinates (→ page 420)
- Three-word addresses from what3words (→ page 420)

  Entering three-word addresses is possible in the online search .

▶ Hide the keyboard with OK.

▶ Select the destination in the list.
The following menu shows the selected destination with the address information and a corresponding map section.

The menu enables the route to be calculated.

Selecting a destination suggestion

Requirements:

- The Allow Destination Suggestions option is switched on (→ page 400).
- The multimedia system has gathered sufficient data in order to show destination suggestions.

Multimedia system:



▶ Select Suggestions and accept a destination suggestion.

or

▶ Select a destination suggestion directly on the Zero Layer (→ page 370).
The route is calculated in the following menu.

ⓘ If Suggestions has been selected, a menu is available via [•••]. The menu offers settings for the suggestions and memory functions.

ⓘ Managing destination suggestions (→ page 435).

Selecting previous destinations

Multimedia system:



▶ Select Previous Destinations.

▶ Select a destination.
The following menu enables the route to be calculated.

ⓘ You can save a destination as a favorite (→ page 435).

Selecting a POI

Requirements

- **For use of personal POIs:** a USB device is connected with the multimedia system.
- Personal POIs with the GPS Exchange format (.gpx) have been saved in the PersonalPOI folder on the USB device.

Multimedia system:



▶ Select POIs.

▶ Select one of the displayed quick access categories, e.g. [P] .

▶ Select the POI.
The following menu enables the route to be calculated.

or

▶ Select All Categories or Personal POIs (see requirements).

▶ Select the category.

▶ Select the POI.
The following menu enables the route to be calculated.

Setting a search filter after selecting a POI category

The preset search position depends on the status of the route guidance:

- If route guidance is not active, In the Vicinity is searched.
- If route guidance is active, Along the Route is searched.

▶ When the search results are displayed, select Filter.

▶ Select the search position, e.g. In the Vicinity.

▶ If a route with intermediate destinations already exists and Near Destination has been selected in the search filters, the destination is selected for the search.

or

▶ Select the desired traveling time to the point of interest.
▶ Select Search Results.

Configuring categories for quick access

The categories are displayed:

- As symbols after calling up the destination entry via ☆
- As a list after calling up All Categories

▶ In the POI menu, select All Categories.
▶ Select ☆ or ★ for a category.
Tapping on ☆ adds the category.
Tapping on ★ removes the category.
▶ Use ↩ to change back.
The new categories are shown after the destination entry is called up the next time.

ⓘ If all available quick-access positions are full, select the category to be replaced.

Changing the order of quick-access categories

▶ In the POI menu, press and hold a category for quick access.
▶ Tap on the arrows next to the selected category.
The arrows for the other categories are grayed out.
▶ Drag the category up or down.
▶ Select ✓.

Deleting quick-access categories

▶ Select ★ for the chosen category.
▶ Select Delete.
▶ Select ✓.

Changing categories for personal POIs

▶ Select Personal POIs.
▶ Press on a category as long as is necessary until a menu appears.
▶ Select Change name and enter a name.
▶ Select Change Icon and select a symbol.
▶ Select Delete and confirm the prompt with Yes.

Selecting a contact for destination entry

Requirements

- A mobile phone is connected to the multimedia system (→ page 456).
- The contacts from the mobile phone have been downloaded .
- The contact has a navigable address.
- The address data can be located on the digital map.

Multimedia system:
↪ ⌂ » ☆

▶ Enter a contact in the entry line.
▶ Select the address.
The following menu allows you to calculate the route.

ⓘ Alternatively, after calling up the destination entry, you can enter the name of a contact in the search field.

Entering geo-coordinates

Multimedia system:



▶ Enter the geo-coordinates as latitude and longitude.

Examples of input formats:

- 47°58'11"N 7°57'25"E (degrees, minutes and seconds)
- 47.969722 7.956944 (decimal degrees)

▶ Confirm the entry.
The following menu enables the route to be calculated.

Entering the destination as a three-word address

Requirements

- An active Internet connection is indicated in the status line on the central display with the symbol.
- The online search is active.

Multimedia system:



▶ Enter the destination as a three-word address from what3words. The entry can be made with spaces between the words instead of dots.
The search results are displayed.

▶ Select the destination in the list.
The following menu enables the route to be calculated.

The Empire State Building has this language dependent three-word address:

- English: parade.help.bleat
- French: commun.verbe.bisquer
- Spanish: suertes.diga.pesca

ⓘ Searching for a destination using three-word addresses is not possible in all countries and in all languages.

Alternatively, use the following entry options:

- Voice navigation (→ page 360)

  Example: during a telephone call you are given a 3-word address. After activating the MBUX voice assistant, say one of the following two voice commands:

  - Navigate to parade help bleat
  - Navigate to parade Point help Point bleat

///WHAT3WORDS

Three-word addresses from what3words are an alternative addressing system for multilingual georeferencing of global locations with a resolution of three meters. Using this grid, locations on the Earth's surface are included which do not have a building address such as a street and house number, for example.

ⓘ Three-word addresses are unique, easy to remember and suffice for most routine applications.

You can convert addresses to three-word addresses and back again:

- At the website https://what3words.com
- In the what3words apps

Selecting a destination on the map

Multimedia system:



- If necessary, move the map (→ page 441).
- Press and hold on the map.
  Available destinations are displayed.

or

- Briefly press on a POI symbol.
  The POI is selected. If there are several POIs at this map position, a list appears.
- Select the destination in the Selected Objects list.
  The following menu allows the route to be calculated.

Selecting a destination from favorites

Requirements

- Destinations are saved as favorites.

Save a previous destination or a destination suggestion as a favorite (→ page 435).

Multimedia system:



- Select Favorites.
- Select a favorite.
  The following menu allows you to calculate the route.

Addresses for home and work are already set

- Select Home or Work.
  The route is calculated in the following menu.

Addresses for home and work are not yet set

- Select Home or Work.
  The prompt No "Home" Address Available Set Address Now? appears, for example.
- Select Yes.
- Search for or select the address.
- Select Save.

Deleting favorites

- Select ••• for a favorite.
- Select Delete.

or

- Select Delete All.
- Confirm the prompt.
  When all the favorites have been deleted, Add Favorite is available, for example.

Selecting received destinations

Requirements

- There is an Internet connection for receiving external destinations.
- A destination has been sent to the vehicle.
- Destinations have been shared from another seat in the vehicle.

Multimedia system:



The vehicle can receive destinations from services or apps. You will be informed when a destination is received.

- Select Received Destinations.
- Select a destination.
  The route is calculated in the following menu.

ⓘ You can save a received destination in the favorites (→ page 435).

Deleting received addresses

▶ Select [•••] for a destination.

▶ Select Delete or Delete All.
The destination or all destinations are deleted.

Route

Calculating a route

Requirements

- **To call up a website address:**
  - An active Internet connection is indicated in the status line on the central display with the [⇄] symbol.
  - The www button is available.
  - A website address is available for the destination selected.

ⓘ This function is not available in all countries.

ⓘ Using the web browser requires additional data volume (→ page 481).



Detailed display with a route (example)

1. Calls up alternative routes
2. Adds the chosen destination to the existing destinations as the next intermediate destination and recalculates the route
3. Calculates a new route to the chosen destination
4. Selects a point of interest in the vicinity of the destination
5. Address of the intermediate destination

After selection of 2 or 3, the route is recalculated.

▶ Select one of the options.

Calling up alternative routes

▶ Select Routes.

▶ Select an alternative route.

Starting route guidance (there is no route yet)

▶ Select [▲] Let's Go!.

Calling up the detailed display with destination address

▶ Pull the bar above the [▲] Let's Go! symbol upwards.
Depending on the destination selection and availability, online content, for example ratings and weather information, is shown.

▶ **To share a destination:** select [⇗] Share.
This option allows you to scan the displayed QR code.

- **To save a destination as a favorite:** select ★ Favorite and then an option.
- **To call up an Internet address:** if a web address is available, select www.
- **To call the destination:** if a telephone number is available, select Call.

Searching for POIs in the vicinity of the destination shown

- Select In The Vicinity.
- Search using categories, enter a search entry or search for a personal POI (→ page 418).

Adding an intermediate destination to the existing route or starting a new route guidance

- Select Add.
  The selected destination address is set as the next intermediate destination. Route guidance begins.
- **There are already four intermediate destinations:** confirm the prompt with Yes and select an intermediate destinations in the route overview (→ page 425), that should be overwritten with the new intermediate destination.

or

- Select Replace.
  The selected destination address is set as a new destination. Route guidance begins.

Selecting a route type

Multimedia system:

↪ ⌂ ›› Navigation ›› ⚙ ›› Route

Using trailer mode and online routes

The route is calculated as a fast route with a short journey time.

Trailer mode is available if a trailer has been coupled with the vehicle. If available, you can select online routes.

ⓘ Trailer mode and online routes are not available in all countries and for all vehicles.

- Select Trailer Mode.
  A prompt is shown in the multimedia system.
- Confirm the prompt.
  The arrival time at the destination takes into account a reduced driving speed with trailer.
- **To use online routes:** switch on the option.

Taking traffic information for the route into account

- Select one of the options.

Explanation of the options:

- Automatic

  Traffic reports via Live Traffic Information are taken into account (→ page 435).

  If a new route with a shorter journey time is determined based on traffic reports, the current route is shown in blue and the new route in gray on the map. You can accept the new route by tapping on the gray line or keep the current route.
- Off

  No traffic reports are taken into account for the route.

Calculating alternative routes

Multimedia system:

↪ ⌂ ›› Navigation ›› ⚙ ›› View

- Activate Route Overview after Start.
  Alternative routes are calculated for every route.

Selecting route options

Multimedia system:

→ ⌂ ⏩ Navigation ⏩ ⚙ ⏩ Route

Avoiding or using route sections, e.g. highways or ferries

▶ Activate or deactivate the avoid option.
Avoid: the option is activated. The route avoids highways, for example.

Use: the option is deactivated. The route takes highways into consideration, for example.

ⓘ The selected route options cannot always be taken into account. Therefore, a route may include a ferry, for instance, even though the Avoid Ferries avoid option is enabled. A message then appears and you will hear a corresponding message.

Avoiding or using toll roads

The use of toll roads requires a usage fee (toll).

▶ Select Toll Roads ❯.
▶ Activate or deactivate Avoid All.
If the option is activated, the route avoids toll roads.

If the option is deactivated, the route takes toll roads into account.

or

▶ Select an option for Cash or Card Payment or Electronic Billing.
Avoid: the route avoids toll roads with the selected method of payment.

Use: the route takes into account roads that require a toll corresponding with the payment type selected.

Using carpool lanes

When using carpool lanes, observe the applicable legal requirements as well as any conditions pertaining to when and where such lanes may be used. Carpool lanes are only available under certain conditions.

Carpool lanes are not available in all countries.

▶ Select Carpool Lanes ❯.
▶ Select one of the options.

The following options are available:

- Avoid

  If this option is selected, then no carpool lanes will be used for the route.
- 2 People
- At Least 3 People
- On Request

  When this option is selected and a carpool lane is available, a prompt appears. You can continue to use the current route or select a route with the carpool lane.

Avoiding areas

▶ Select Avoid Areas ❯ (→ page 442).

Selecting notifications for the route

Requirements:

- **For an audible indication when approaching a personal POI:** the USB device contains personal POIs.
- The USB device is connected with the multimedia system.
- The category in which the personal POI belongs is activated.

Multimedia system:

→ ⌂ ▸▸ Navigation ▸▸ ⚙ ▸▸ Messages & Acoustic Signals

Switching navigation announcements on or off

- Activate Reduced Messages.
  If a driving instruction is available for a simple change in direction, you hear a brief announcement, e.g. "turn right in 600 ft (200 m)". The number of driving instructions along the route is minimized.
- Activate Detailed Messages.
  If a driving instruction is available and there is a complex driving situation, you hear supplementary information, e.g. "In 600 ft (200 m) turn right and continue to follow the major road". Additional driving instructions are issued for the route, for example on turning major roads.
- Activate Announce Street Names.
  The name of the street into which the vehicle should turn is announced.

ⓘ This option is not available in all countries and languages.

Switching traffic announcements on or off

- Activate or deactivate Announce Traffic Warnings.
  If available, traffic warnings are announced, e.g. before the end of traffic jams that pose a risk.

Audible indication when approaching a personal POI

- Select Personal POIs.
- Activate a category.
  When approaching a personal POI in the selected category an audible indication will be issued.

Displaying a route overview

Requirements:

- A destination is entered.

Multimedia system:

→ ⌂ ▸▸ Navigation



Example: route guidance is active

1. Intermediate destination
2. Destination
3. Searches for a gas station
4. Switches traffic information display on or off

When route guidance is active, the destination and entered intermediate destinations are shown.

Depending on the route, traffic situation and available data, further information can be displayed.

The route can include up to four intermediate destinations.

- If route guidance is not active, select Previous Destinations, for example.
- Select the destination and calculate the route .

ⓘ The following options are available for route planning in the route overview:

- Changing the order of the destinations (→ page 426).
- Deleting a destination.
- Substituting an intermediate destination along the route.

Planning routes

Multimedia system:

→ Home ▸▸ Navigation ▸▸ Search

- Enter the intermediate destination (→ page 32).
  After entering the destination and new calculation of the route, the map is shown again. The route contains a new intermediate destination.

ⓘ If there are already four intermediate destinations, delete an intermediate destination (→ page 426).

Editing a route with intermediate destinations

Requirements:

- The destination and at least one intermediate destination have been entered.

Multimedia system:

→ Home ▸▸ Navigation

Changing the order of the destinations

- In the route overview, press and hold on a destination.
- Move the destination with ◀ or ▶.
- Tap on Done ✓.
  The editing mode is ended.

Deleting a destination

- In the route overview tap on ⊗ for a destination.

Substituting an intermediate destination along the route

If an intermediate destination is entered and there are already four intermediate destinations, you will be asked to substitute one intermediate destination. A prompt appears.

- Select Yes.
- In the route overview, tap on ⊗ for the intermediate destination to be substituted.
  The new intermediate destination is added to the route.

Displaying the route list

Multimedia system:



▶ Tap on the navigation window (7) (→ page 415).



Example: route list

(1) Upcoming maneuver with turning arrow, distance to maneuver, street number, street name

Switches off navigation announcements

Switches on navigation announcements

Including the following route sections on the route to the destination

(2) Current vehicle position

The route sections are displayed in the navigation window. The route list is updated during the journey.

ⓘ Freeway information shows the available service facilities. After selecting symbols, e.g. for car parks, service areas or freeway exits, the POI is adopted as an intermediate destination or destination.

▶ Press the arrow at the bottom of the navigation window briefly.

▶ Swipe up or down.

▶ Select a route section.
The map section is displayed.

Selecting an alternative route

Requirements

- A route has already been created.

Multimedia system:

 ▸▸ Navigation ▸▸ Alternative Routes

The original route is shown in the navigation window and is highlighted on the map.

Alternative routes are shown on the map together with the difference in traveling time.

ⓘ A faster route may be shown as an alternative route that is considerably longer.

The following route information is displayed:

- Driving time
- Time of arrival
- Distance to the destination
- Avoid options based on the set route options
- Driving time saved or lost compared with the original route

▶ When the alternative routes have been calculated, display the route in the navigation window by swiping to the right or left.

Changing route type

▶ Select Filter.

▶ Switching the route type on or off.

Avoiding or using route options

▶ Select Filter.

▶ Switch the route options on or off (⟶ page 424).

▶ Confirm the settings with Done.

▶ **To start route guidance to the alternative route:** select Start.

▶ **To select an alternative route on the map:** touch any point on the alternative route. The alternative route is highlighted.

Activating a commuter route

Requirements

- You have created a profile (⟶ page 380).
- The Allow Destination Suggestions option is switched on (⟶ page 381).
- The Activate Commuter Route option is switched on .
- The multimedia system has gathered sufficient data in order to show destination suggestions.
- Routes have been learned for these destination suggestions.
- Route guidance is not active.

ⓘ This commuter route is not available in all countries.

Multimedia system:

⮡ [⌂] ⏩ Navigation ⏩ [⚙] ⏩ Route

▶ Activate Activate Commuter Route. The navigation system automatically detects that the vehicle is on a commuter route.

For the daily commuter route, traffic events on the route are also reported when driving without active route guidance.

▶ **To select commuter route:** select Start. Route guidance begins without spoken driving instructions.

ⓘ A commuter route is suggested even with delays on the route.

▶ **To delete a commuter route:** select [×].

Adjusting the route on the map

Requirements:

- A route has already been created.

You can change the course of the original route on the map. A new intermediate destination is set in the process.

ⓘ If the maximum number of intermediate destinations is reached, the function is not supported. Press the OK button to confirm the message.

▶ Press lightly on the route with one finger and hold it in place. A symbol appears. The route can be changed.

▶ Drag and hold the route with your finger to a desired map position. The new route is displayed. The route is recalculated.

When the route is calculated, the journey time and distance are compared with the original route.

When the finger is pulled away from the display, the intermediate destination is shown on the map.

- Accept the route with Confirm or reject it with Cancel and return to the original route.

Switching the automatic gas station search on or off

Multimedia system:

→ ⌂ ▸▸ Settings ▸▸ Vehicle

- Select Other Functions.
- Activate or deactivate Automatic Gas Station Search.
  If Automatic Gas Station Search is switched on, a notification appears in which the search for gas stations is started.

Starting an automatic gas station search

Requirements

- The automatic gas station search is activated (→ page 429).

Driving situation

The fuel level in the fuel tank reaches the reserve fuel level.

The central display shows the following notification: Reserve FuelTap here to search for gas stations.

- Confirm the notification.
  The automatic gas station search begins. The available gas stations along the route or in the vicinity of the vehicle's current position are displayed.
- Select a gas station.
- Calculate the route with the gas station as ⛽ an intermediate destination or as ▲ a destination (→ page 422).
- **If there are already four intermediate destinations:** select Yes in the prompt.
  The selected gas station is entered in the route overview at position 1. Intermediate destination 4 is deleted. Route guidance begins.

Starting the automatic service station search

Requirements:

- ATTENTION ASSIST is activated (→ page 282).
- You are driving on a highway.
- There are service stations along the route section ahead.

Driving situation

The following notification is shown on the central display ATTENTION ASSIST Tap here to search for rest areas..

- Confirm the notification.
  The service station search starts. The available service stations along the route or in the vicinity of the vehicle's current position are displayed.
- Select a service station.
- Calculate the route with the service station as an ⛽ intermediate destination or as a ▲ destination (→ page 422).
- **If there are already four intermediate destinations:** select Yes in the prompt.
  The selected service station is entered in the route overview at position 1. Intermediate destination 4 is deleted. Route guidance begins.

Starting and editing a stored route

Requirements

- A USB device with stored routes is connected with the multimedia system (→ page 488).

- The route is stored in the "Routes" folder with the GPS Exchange format (.gpx).

Multimedia system:



- ▶ Press the double arrow in the destination input line until Saved Routes is displayed.
- ▶ Select Saved Routes.

Starting a saved route

- ▶ Select a route.
- ▶ Select Start Route Guid. from Start or Start: from Current Position.
  Route guidance begins.

Renaming a route

- ▶ Press on a route until a menu is shown.
- ▶ Select Rename.
- ▶ Enter the name.
- ▶ Select OK.

Recording and storing a route

Requirements:

- A USB device is connected with the multimedia system (→ page 488).

Multimedia system:



- ▶ Press the double arrow in the destination input line until Saved Routes is displayed.
- ▶ Select Saved Routes.

Starting recording

- ▶ Select Start Recording.
  A white rectangle is displayed.
  The route is stored on the USB device.

Stopping recording

- ▶ Press the white rectangle.
- ▶ Select End Recording.

Route guidance

Notes on route guidance

⚠ WARNING Risk of distraction from operating integrated communication equipment while the vehicle is in motion

If you operate communication equipment integrated in the vehicle when driving, you could be distracted from the traffic situation. This could also cause you to lose control of the vehicle.

- ▶ Only operate this equipment when the traffic situation permits.
- ▶ If you cannot be sure of this, stop the vehicle whilst paying attention to road and traffic conditions and operate the equipment with the vehicle stationary.

You must observe the legal requirements for the country in which you are currently driving when operating the multimedia system.
Route guidance begins once a route has been calculated. The road and traffic rules and regulations always have priority over multimedia system driv-

ing instructions. Driving instructions are, for example navigation announcements, changes in direction and lane recommendations.

Changes in direction and lane recommendations are shown in the navigation window.

The following displays and functions are also available in the navigation window, for example:

- Route list
- Destination information
- Traffic information, e.g. length of traffic jam, delay
- Freeway facilities
- Parking lot search

If you do not follow the driving instructions or if you leave the calculated route, a new route is calculated automatically.

If, for example, the route is diverted or the direction of a one-way road has been reversed, driving instructions may deviate from the actual traffic situation.

Alternatives may be offered during route guidance, e.g. before passing a freeway exit road. The additional driving time for the journey along the freeway exit is shown.

For this reason, you must always observe road and traffic rules and regulations during your journey as well as the prevailing traffic conditions.

The route can differ from the ideal route, for example in the event of roadworks or incomplete digital map data.

Notes on satellite reception

The correct function of the navigation system depends amongst other things on reception of the satellite system used. In certain situations satellite reception can be impaired, malfunction or even not possible, e.g. in tunnels or in parking garages.

Changing direction overview

Changes of direction are shown in the following displays:

- Detailed image of the intersection

  The display appears when you drive into a intersection.
- 3D image

  The display appears when driving on intersection-free, multi-lane roads, for example at freeway exits and freeway interchanges.



Example: detailed image of the crossing with upcoming changes of direction

1. Name of the street to turn into
2. Change of direction arrow (also on the map)
3. Current distance to the change of direction

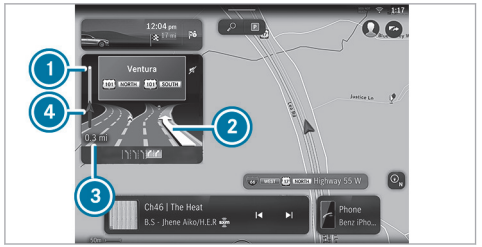

Example: 3D image of the upcoming change of direction

1. Maneuver point
2. Change of direction arrow (also on the map)
   Larger map scales show change of direction points instead of change of direction arrows.
3. Current distance to the change of direction
4. Current vehicle position

There are three phases when changing direction:

- Preparation phase
  If there is enough time between the changes of direction, the multimedia system prepares you for the upcoming change of direction. A navigation announcement is issued, e.g. "Prepare to turn right".
  The navigation window shows: the direction information or the name of the road which is to be turned into as well as the distance to the change of direction.
- Announcement phase
  The multimedia system announces the upcoming change of direction, e.g. by announcing "Turn right in 900 ft (300 m)".
  When the Auto Zoom map orientation is switched off (→ page 445), a detailed representation of the intersection or a 3D image of the upcoming change in direction appears in the navigation window.
- Change-of-direction phase
  The multimedia system announces the imminent change of direction, e.g. by announcing "Now turn right".
  Example 3D image: when the distance to driving maneuver 1 is displayed with 0 ft (0 m) the driving maneuver is performed.

ⓘ Changes in direction are also displayed on the driver's display and head-up display.

Lane recommendations overview



Example: lane recommendations

1. Possible lane (white arrow)
2. Recommended lane (white arrow, blue background)
3. New lane which is not recommended (gray arrow)

Not in the image: A possible lane is indicated with a white arrow.

This display appears for multi-lane roads.

If the digital map contains the relevant data, lane recommendations are displayed in the navigation window.

Explanation of the displayed lanes:

- Recommended lane

  In this lane, you will be able to complete both the next change of direction and the one after that.
- Possible lane

  In this lane, you will only be able to complete the next change of direction.
- Non-recommended lane

  In this lane, you will not be able to complete the next change of direction without changing lane.

During the change of direction, new lanes may be added. Bus lanes are also shown.

ⓘ Lane recommendations are also displayed on the driver's display and head-up display.

Using freeway information

When driving on the freeway, upcoming freeway facilities and available service facilities are shown in the route list. These include parking lots, service stations or freeway exits with service POIs, for example.

The entries are sorted according to increasing distance from the current vehicle position.

▶ Select an entry.

▶ If several service facilities are available, select a service facility from the list.
The destination address and the map position are shown.

▶ Calculate the route (→ page 422).

or

▶ Search for a POI in the vicinity.

or

▶ Use other functions, e.g. store the destination address of the service facility.

Destination reached

Once the destination is reached, you will see the checkered flag. Route guidance will now be complete. The navigation menu is shown.

When an intermediate destination has been reached, you will see the intermediate destination flag with the number of your intermediate destination. Route guidance is continued.

Switching navigation announcements on or off

Switching off

▶ Press the button on the steering wheel or on the MBUX multimedia system during a navigation announcement (→ page 385).
The Spoken voice guidance has been deactivated. message appears.

or

▶ In the route list for a driving maneuver select (→ page 427).
The symbol changes to .

Switching on

▶ In the navigation window, select for an upcoming driving maneuver.
The current navigation announcement is played.

The symbol changes to .

Switching navigation announcements on or off during a phone call

- Press the button on the steering wheel on the right.

or

- Press in the central display.
- Select Settings.
- Select System.
- Select Audio.
- Select Voice Output.
- Activate or deactivate Driving Recommendations During Call.
- **To leave the menu:** select .

Adjusting the volume of navigation announcements

Multimedia system:

 ▸▸ Settings ▸▸ System ▸▸ Audio ▸▸ Voice Output

- Select Voice Guidance Volume.
- Set the volume.
- **To leave the menu:** select .

Route guidance is active

- Set the volume during a navigation announcement on the steering wheel (→ page 377) or on the switch panel under the central display (→ page 367).

Switching audio fadeout on or off during navigation announcements

- Press the button on the steering wheel on the right.

or

- Press in the central display.
- Select Settings.
- Select System.
- Select Audio.
- Select Voice Output.
- Activate or deactivate Audio Fadeout During Navigation Announcements.
- **To leave the menu:** select .

Repeating navigation announcements

Requirements

- A route has already been created.
- Route guidance is active.

Multimedia system:

- In the navigation window, select for an upcoming driving maneuver.
- Select .
  The current navigation announcement is repeated.

Canceling route guidance

Requirements

- A route has already been created.
- Route guidance is active.

- Select in the navigation module (→ page 415).

Overview of off-road status during route guidance

Due to roadworks, for example, there may be differences between the data on the digital map and the actual course of the road. In such cases, the multimedia system will temporarily be unable to

locate the vehicle's current position on the digital map. The vehicle is off-road.

You can see the Please follow the arrow display and hear the corresponding navigation announcement. Route guidance may be restricted.

When the vehicle is back on a road known to the multimedia system, route guidance continues as normal.

Destination

Saving the current vehicle position

Multimedia system:



- When the map is shown, tap on the current vehicle position.
- Select Save Position.
- **To save as a favorite:** select Save as Favorite .
- **To save as "Home" address:** select Home .
- **To save as "Work" address:** select Work .

Managing previous destinations

Multimedia system:



- Select Previous Destinations.

Saving the last destination as a favorite

- For a previous destination, select •••. A menu appears.
- **To save as a favorite:** select Save as Favorite .
- **To save as "Home" address:** select Home .
- **To save as "Work" address:** select Work .

Deleting a previous destination

- For a previous destination, select •••.
- Select Delete.

or

- Select Delete All.
- Confirm the prompt.

Editing destination suggestions

Requirements:

- The Allow Destination Suggestions option is switched on (→ page 400).
- For the display of destination suggestions: the multimedia system has gathered sufficient data.

Multimedia system:



- Press and hold on a destination suggestion. A menu appears.
- **To cancel a destination suggestion:** select Do Not Suggest Now or No Longer Suggest.
- **To save a destination suggestion:** select Save as Favorite, Home or Work.

ⓘ Delete a destination suggestion from the favorites (→ page 421).

Route guidance with current traffic reports

Traffic information overview

Current traffic reports are received with the Live Traffic Information subscription service.

The service updates the traffic situation via the Internet connection at short, regular intervals.

Information on the vehicle's position is regularly sent to Mercedes-Benz AG. The data is immedi-

ately rendered anonymous by Mercedes-Benz AG and forwarded to the traffic data provider. Using this data, traffic reports relevant to the vehicle's position are sent to the vehicle. The vehicle acts as a sensor for the flow of traffic and helps to improve the quality of the traffic reports.

ⓘ There may be differences between the traffic reports received and the actual road and traffic conditions.

If you do not want to transmit the vehicle position, you have the following options:

- You deactivate the service in the Mercedes me user account.
- You have the service deactivated at an authorized Mercedes-Benz Center.

ⓘ Hazard warnings can be received using the Car-to-X service (→ page 438).

Showing information from the service provider for Live Traffic Information

Requirements:

- The vehicle is equipped with Live Traffic Information.

Multimedia system:

→ ⌂ ⏩ Apps ⏩ Mercedes me ⏩ My Services

▶ Select Live Traffic Information.

ⓘ You have the following options for extending the subscription:

- At any authorized Mercedes-Benz Center
- With a call to the Mercedes-Benz Customer Assistance Center via the me button (→ page 469)
- If the vehicle identification number (VIN) is linked to your Mercedes me user account, you can renew the subscription yourself. To do this, call up the user profile on the https://www.mercedes.me after logging in with your Mercedes me user account.

Displaying traffic information on the map

Requirements:

- Traffic Incidents and Free Flowing Traffic are switched on (→ page 438).

Multimedia system:

→ ⌂

▶ If necessary, move the map (→ page 441).

The map shows the following traffic information depending on the activated settings:

- Traffic incidents

  These are roadworks, road blocks and warning messages, for example.

  When route guidance is active, the symbols for traffic incidents will be shown in color on the route. Off the route they are gray.

  - Warning messages ⚠

    Traffic safety information can be shown, e.g. if there are people on the road.

    If the vehicle approaches a danger area, for example the end of a traffic jam in a dangerous position, the ⚠ symbol is shown on the map. If Announce Traffic Warnings is switched on and a message has been issued, an additional announcement is made.
- Traffic flow information:

- Traffic jam (red line)
- Slow-moving traffic (orange line)
- Heavy traffic (yellow line)
- Free-flowing traffic (green line)

- Display for traffic delays on the current route

  The smallest value for the display for traffic delays is a minute.

Showing traffic incidents on the route

Requirements:

- The Traffic Incidents display is switched on (→ page 438).

Multimedia system:

→ ⌂ ▸▸ Navigation

If there are traffic incidents on the route, these are shown on the map and in the route overview.

The display is along the entire route.

ⓘ The display is for route lengths up to approx. 1240 mi (2000 km).

ⓘ With the MBUX Voice Assistant you can inform yourself about traffic incidents on your route. Ask, for example How is the traffic on my route? or How is the traffic at home?. A voice output is given.



Example: traffic incidents on the route

1. Total delay
2. Color display of traffic flow information, delay and length, road name and/or road number
3. Switches traffic information display on or off

- To see all of the traffic incidents on the route, swipe to the right or left in the route overview. The route section is highlighted on the map.

Displaying detailed information

- Tap on a traffic incident symbol or traffic flow information in the route overview (when route guidance is active) or on the map.
  The detailed information is shown, for example the road section, the direction and the delay.

  If a traffic jam symbol is selected, the trend can be displayed as decreasing or increasing.
- **Several pieces of traffic flow information are available in the immediate vicinity on the map:** tap on the upper line and select the traffic flow information in the list.
- **Several traffic incidents are on the map in the immediate vicinity:** tap on the top traffic incident symbol and select from the list of traffic incidents.

Switching the traffic information display on

Multimedia system:

→ Navigation

- Select View.
- Activate Traffic.
- Activate Traffic Incidents and Free Flowing Traffic.
  Traffic incidents, for example roadworks, local area reports (e.g. fog) and warning messages, are shown on the route.

Car-to-X-Communication

Car-to-X-Communication overview

The following requirements apply for the Car-to-X-Communication service:

- The vehicle is equipped with an MBUX multimedia system with navigation function.
- There is a subscription for the Live Traffic Information service.
- The Car-to-X-Communication service is activated in your Mercedes me user account.

ⓘ Car-to-X communication is not available in all countries.

The communication module automatically establishes an Internet connection once the vehicle is switched on. If there are any hazard warnings, they will be provided shortly thereafter. Depending on the mobile phone connection, the provision takes place from within a second up to about a minute.

Benefits of Car-to-X-Communication:

- Dangers are automatically detected by the vehicle or can be reported by the driver. These are then sent to vehicles with Car-to-X-Communication in the immediate vicinity.
- If available, current details relating to hazard spots near the vehicle's current position are received.

  This gives you sufficient time to adapt your driving style to the traffic conditions.

The use of Car-to-X-Communication requires the regular transmission of vehicle data to Mercedes-Benz AG. The data is then immediately pseudonymized by Mercedes-Benz AG. The vehicle data is deleted after an appropriate amount of time has elapsed (several weeks) and is not stored permanently.

ⓘ Data which serves as identification is replaced during the pseudonymization process. In this way, your identity is protected against access by unauthorized third parties.

Displaying hazard warnings

Multimedia system:

→

If hazard warnings are available these can be shown as symbols on the map. The display depends on the settings for the Traffic Incidents option.

- Set the option via ⚙ (→ page 438).
  If the option is activated, all of the symbols are shown.

  If the option is deactivated, the symbols are only shown when there is a hazard warning.

The following hazards may be shown on the map:

- Accidents and breakdowns
- Slippery roads, fog, crosswinds and heavy rain
- Hazards reported manually

- Vehicle with active hazard warning light
- Roadworks
- Additional hazards (if available)

ⓘ If Announce Traffic Warnings is switched off (→ page 424), voice output can indicate a danger area.

Sending hazard warnings

Reporting hazards manually

ⓘ Automatically detected hazard warnings are sent by the vehicle.

▶ When the map is shown, tap on the [▲] current vehicle position.
The Position menu is shown.

▶ Select Report Traffic Incident.
The Thank you for supporting accident prevention! message appears.

Route guidance with augmented reality

Overview of route guidance with augmented reality

⚠ **WARNING** Risk of accident and injury as a result of distraction, incorrect depiction or wrong interpretation of the display

The camera image of the augmented reality display is not suitable as a guide for driving.

▶ Always keep an eye on the actual traffic situation.

▶ Avoid extended observation of the camera image.

During route guidance with augmented reality a camera image with the real traffic scene is shown on the central display before a turning maneuver. The camera image includes additional information, for example arrows indicating a change of direction.

If the options are switched on and this additional information is available, road names and house numbers are displayed (→ page 440).



① House number
② Street name
③ Change of direction arrow

Route guidance with augmented reality will not be available in some situations, e.g. in the event of poor satellite reception or roads that have not been digitized.

Route guidance with augmented reality is not available in all countries.

You can watch an animation on this topic via the following link:

Activating route guidance with augmented reality

WARNING Risk of accident and injury due to imprecise positioning of additional information

The additional information from the augmented reality display may be inaccurate and is not a substitute for observing and assessing the actual driving situation.

- Always keep an eye on the actual traffic situation when carrying out all driving maneuvers.

Multimedia system:

Home ▸▸ Navigation ▸▸ Settings

- Select View.
- Select Augmented Reality Video.
- Activate or deactivate Augmented Reality Video.

  If the function is activated, the following are shown before a turning maneuver in the central display:
  - The camera's video image

    The video image includes additional information.
  - The AR switch

    The video image can be shown or hidden.
- **To show or hide the video image:** tap on AR.

Showing property information for route guidance with augmented reality

Requirements

- Augmented reality is activated (→ page 440).

Multimedia system:

Home ▸▸ Navigation ▸▸ Settings

- Select View.
- Select Augmented Reality Video.
- Activate Street Names and House Numbers. During route guidance, the activated options are shown as additional information in the camera image.

Map and compass

Setting the map scale

Multimedia system:

Home

Zooming in

- When the map is shown, tap twice quickly with one finger on the central display.

or

- Move two fingers apart on the central display.

Zooming out

- Tap with two fingers on the central display.

or

- Move two fingers together on the central display.

ⓘ You can set the unit of measurement of the map scale (→ page 400).

Moving the map

Multimedia system:

→ ⌂

▶ When the map is displayed, swipe in any direction with one finger on the central display.

The following functions are available:

- Select a destination on the map (→ page 421).
- Select a POI (→ page 418).
- Show traffic incidents on the map (→ page 437).

▶ **To reset the map to the current vehicle position:** select ⌖ Center .

Switching the route overview after start on or off

Multimedia system:

→ ⌂ ▸▸ Navigation ▸▸ ⚙

▶ Select View.

▶ Activate ⬬ or deactivate ⬭ Route Overview after Start.
If the option is enabled, the map shows the full route after route guidance is started and, if available, all alternative routes.

Selecting POI symbols for the map display

Multimedia system:

→ ⌂ ▸▸ Navigation ▸▸ ⚙

POIs include restaurants and hotels, for example. These are displayed as symbols on the map. Not all POIs are available in all countries.

Personal POIs are destinations which you have saved on a USB device, for example.

ⓘ The display of POI symbols on the map can be activated or deactivated as a favorite.

▶ Select View.

▶ Select POI Symbols On Map ›.

▶ Activate or deactivate Hide All POIs.
When the option is switched on, all POIs are hidden on the map. The settings in the POI categories are kept.
When the option is switched off, the POIs are shown on the map according to the settings in the POI categories.

ⓘ If the conditions are fulfilled, the POI symbols are shown with current online information (→ page 446).

Switching display of categories for quick-access on or off

▶ Switch a category on or off in the menu.

Selecting categories

▶ In the menu, select Other Categories ›.

▶ Activate or deactivate Show All.
When the option is switched on, the POI symbols for all categories are shown on the map.

or

▶ Select › the categories.

▶ Activate or deactivate the categories.
The POI symbols for the selected categories are shown on the map.

Selecting personal POI categories

▶ In the menu, select Personal POIs ›.

- Select [>] a category.
- Activate or deactivate Show on Map.
- **To issue a signal when approaching:** activate Visual Notification and Acoustic Notification.

Resetting the POI symbol display

- In the menu, select Reset POIs .
  The settings are reset to the standard settings.

Selecting the display of additional information on the map

Multimedia system:

→ [⌂] ⏩ Navigation ⏩ [⚙]

- Select View.
- Select Show More Information.
- Switch the options on or off.

The following options are available:

- Current Street

  If the option is enabled, it will be displayed in the navigation window.
- Scale

  If the option is enabled, the map scale is permanently displayed on the map.

  The option also influences the display on the driver's display.
- Elevation
- Next Intersection

  If the option is switched on and the journey continues without route guidance, the name of the next intersecting street will be displayed in the navigation window.

Displaying the map version

Multimedia system:

→ [⌂] ⏩ Navigation ⏩ [⚙]

- Select View.
- Select Map Data Version.
  The detail information is displayed.

ⓘ The online map update service from Mercedes me connect can be used to update the map data (→ page 31).

ⓘ You can obtain information about new versions of the digital map via the following options:

- Depending on the setting, as a message in the Mercedes inbox or as an e-mail
- At an authorized Mercedes-Benz Center

Overview of area avoidance on the route

You can define areas along a route that you would like to avoid.

Avoiding a new area for the route

Multimedia system:

→ [⌂] ⏩ Navigation ⏩ [⚙] ⏩ Route ⏩ Avoid Areas

- Select Avoid New Area.

Starting using the map

- Select Using Map.
  A red rectangle appears. This designates the area that should be avoided.
- Move the map (→ page 441).
- Set the map scale (→ page 440).

- Select OK.
  The area is entered into the list.

Starting using destination search

- Select Via Address Entry.
- Enter the address (→ page 32).
- Select the destination in the list.
  The map appears. The area is saved.

Changing an area to be avoided

Multimedia system:

→ ⌂ ▸▸ Navigation ▸▸ ⚙ ▸▸ Route ▸▸ Avoid Areas

- Select an area in the list.
- Select Edit.
- **To move an area on the map:** swipe in any direction on the central display.

Changing the size of the area

- Move two fingers apart or together on the central display.
- Select OK.
  The area is entered into the list.

Taking the area for the route into account

- Select the area in the list.
- Activate Avoid Area.
  If route guidance is active, a new route is calculated.

  If there is no route yet, the setting is carried over to the next route guidance.

  The route can include an area that is to be avoided in the following cases:
  - The destination is located in an area that is to be avoided.
  - There is no practical alternative route.

Deleting an area to be avoided

Multimedia system:

→ ⌂ ▸▸ Navigation ▸▸ ⚙ ▸▸ Route ▸▸ Avoid Areas

Deleting an area to be avoided

- Select an area in the list.
- Select Delete.
- Confirm the prompt with Yes.

Deleting all areas to be avoided

- If at least two areas to be avoided are set, select Delete All.
- Confirm the prompt with Yes.

Map data update overview

As the content of a digital road map has a short life, outdated data may have a negative effect on all navigation functions. For the best MBUX navigation experience, you should install all of the map updates offered by Mercedes-Benz.

The following options are available for the update of map data:

- Online map update
- Updates from the Mercedes me Portal
- Update at an authorized Mercedes-Benz Center

  Additional costs can be incurred in this process.

Online map update

Requirements:

- Mercedes me connect is available.

- You have a Mercedes me user account.
- The Online Map Update service is available for your region.
- The service has been activated.

Installation takes place in the background as an automatic map update.

The MBUX multimedia system installs all of the available map updates for the North American regions in which the vehicle is located or is moved.

The online map update is activated at the latest after the next time the vehicle is switched on.

Updates from the Mercedes me Portal

The map data for several regions can also be updated manually. Log in with your Mercedes me user account at: https://www.mercedes-benz.de/

Follow the menu path My Mercedes me Account > Dashboard > Manage Vehicle > Manage Services > Online Map Update. Select the regions to be downloaded to a storage medium.

After the map data has been copied, connect the storage medium with your vehicle. Select the notification with information about a new version of the map data and start the installation. After the MBUX multimedia system has been restarted, the updated map data is used.

Overview of map data

If map data is reinstalled in a vehicle, no activation code needs to be entered.

For map data purchased as data media, the enclosed activation code must be entered after starting the installation.

ⓘ The activation code is only ever valid for one vehicle.

In the event of the following problems, please contact an authorized Mercedes-Benz Center:

- The multimedia system does not accept the activation code.
- You have lost the activation code.

Displaying the compass

Multimedia system:



▶ When the map is shown, tap on the  current vehicle position until the Position menu is shown.

▶ Select Compass.

The compass display shows the following information:

- The current direction of travel with bearing (360° format) and compass direction
- Longitude and latitude coordinates in degrees, minutes and seconds
- Number of satellites from which a signal can be received

Sharing the vehicle position with a contact

Requirements

- A mobile phone is connected to the MBUX multimedia system.
- The connected mobile phone supports sending text messages from the vehicle (→ page 462).

Multimedia system:

↝ ⌂ ⏩ Navigation ⏩ Route

The current vehicle position can be shared with a contact.

- In the Route menu, select Share Journey. After selection, the display changes to Stop Sharing Journey.
- Select the contact (→ page 460). The text message is sent. The display changes back to the digital map. A symbol is displayed in the status line. When the message has been sent, a notification is displayed.

ⓘ This function is not available in all countries.

Setting the map scale automatically

Multimedia system:

↝ ⌂ ⏩ Navigation ⏩ ⚙

- Select View.
- Activate Auto Zoom. When the option is switched on, the map scale is set automatically depending on your driving speed and the type of road.

ⓘ The automatically selected map scale can be changed manually. After a few seconds, this is automatically reset. When the option is activated, no detailed display of the intersection or a 3D image is shown in the navigation window during an upcoming driving maneuver.

Displaying the satellite map

Requirements

- There is an Internet connection.
- Mercedes me connect is available.
- You have a Mercedes me user account.
- The vehicle is connected with the user account and you have accepted the Mercedes me connect terms of use.

  Further information can be found at: https://www.mercedes.me
- The service is available.
- Satellite maps are available.

Multimedia system:

↝ ⌂ ⏩ Navigation ⏩ ⚙

- Select View.
- Activate or deactivate Satellite Map.

  When Satellite Map is selected, they are displayed at the following map scales:
  - On-board maps

    The satellite maps are displayed in map scales from 2 mi (2 km).
  - Online maps

    The satellite maps are displayed in high-resolution map scales from 50 ft (10 m).

  When Satellite Map is not selected, no satellite maps are displayed.

ⓘ The display of satellite maps is not available in all countries.

Displaying the range

Requirements:

- There is an Internet connection.
- Mercedes me connect is available.

- You have a Mercedes me user account.
- The vehicle is connected with the user account and you have accepted the Mercedes me connect terms of use.

  Further information can be found at: https://www.mercedes.me
- The service is available.
- The service has been activated at an authorized Mercedes-Benz Center.

Multimedia system:



► Select View.

► Activate Range.

The range is shown on the map with the following displays:

- For gasoline and diesel vehicles: green display

When the lower reserve capacity is reached then the range display on the map is switched off.

ⓘ The range display on the map is not available in all countries.

Displaying online map contents

Requirements:

- There is an Internet connection.
- Mercedes me connect is available.
- You have a Mercedes me user account.
- The vehicle is connected with the user account and you have accepted the Mercedes me connect terms of use.

  Further information can be found at: https://www.mercedes.me
- The service is available.
- The service has been activated at an authorized Mercedes-Benz Center.

Multimedia system:



► Select View.

► Switch on an online service, e.g. Weather. Current weather information is displayed on the navigation map, e.g. temperature or cloud cover.

The service information is not shown in all map scales, e.g. weather symbols.

ⓘ The display of online map content is not available in all countries.

Toll collection with Toll System

Overview of the toll system

⚠ **WARNING** Risk of distraction from information systems and communications equipment

If you operate information systems and communication devices integrated in the vehicle when driving, you could be distracted from the traffic situation. This could also cause you to lose control of the vehicle.

► Only operate this equipment when the traffic situation permits.

► If you cannot be sure of this, stop the vehicle whilst paying attention to road and traffic conditions and operate the equipment with the vehicle stationary.

You must observe the legal requirements for the country in which you are currently driving when operating the MBUX multimedia system and the control unit.

ⓘ The toll system is optional equipment and is not available in all countries and vehicles.

Debiting of toll charges at freeway toll gates is facilitated with an electronic payment system.

The toll system uses RFID (Radio Frequency Identification) for data transfer between the control unit and the toll station.

The toll system is initially switched off at the factory.

The control unit is in the vehicle glove box.

In order to be able to use the toll system, it must have been registered by the customer and activated by the service provider:

- Activate the toll system in the settings of the MBUX multimedia system or on the control unit.
- There are two ways to register and activate:
  - In the Mercedes me App, register the unit identification number of the control unit and activate the toll system.
  - Alternatively, you can register and activate via the Toll Service app.

  Activation of the toll system can take up to 48 hours after registration.

When the toll system is activated, the automatic detection of the number of vehicle occupants is initially switched off at the factory. The number of vehicle occupants is preset with one person.

The following applies for roads on which toll charges are dependent on the number of vehicle occupants:

- If the automatic detection of the number of vehicle occupants is switched off, the number of vehicle occupants must be selected manually. This ensures correct toll accounting.
- The number of vehicle occupants can be transmitted automatically. In the process, the number of seat belts worn is determined.

  If the number of detected persons does not correspond with the number of persons actually in the vehicle, the number of persons must be manually selected.

The standard setting of one person does not need to be changed for roads which require toll payment regardless of the number of vehicle occupants.

The toll system enables the payment of toll charges in many states of the USA.

ⓘ In Mexico, for example, the toll system can be registered and activated for journeys to the USA.

Notes on use

- You can only use the toll system once registration and activation are complete.
- Drive at the prescribed vehicle speed in the toll lane.
- Mercedes-Benz recommends operation using the MBUX multimedia system. Alternatively, this can also be done on the control unit in the glove box.
- For safety reasons, entries should be made while the vehicle is stationary.

- For further information, please consult the Mercedes me App or an authorized Mercedes-Benz Center.

  Or call 1-800-FOR-MERCedes (in the USA) or 1-800-387-0100 (in Canada).

Registering and activating the toll system

Requirements

- **For activation via Mercedes me:**
  - You have a Mercedes me user account.
  - The vehicle is connected with the user account and you have accepted the Mercedes me connect terms of use.

    Further information can be found at: https://www.mercedes.me
  - The Mercedes me App is available on your mobile phone.

ⓘ Registration and activation takes place either via Mercedes me or via an app in the MBUX multimedia system. Both methods are described below.

Registering and activating via Mercedes me

▶ **In the MBUX multimedia system:** select ⌂.

▶ Select Settings.

▶ Select Vehicle.

▶ Select Toll System.
The unit identification number (UID) of the control unit is displayed.

▶ Select On.
The following message appears on the central display: The toll system must be registered and activated in the Mercedes me app. "Automatic" transmits the number of seat belts fastened. If this does not correspond to the number of passengers, enter the number of people "manually". It is not necessary to specify the number everywhere.

▶ Press the OK button to confirm the message.

▶ **On the mobile phone:** open the Mercedes me App.

ⓘ Alternatively, the services can be called up in your Mercedes me account on the MBUX multimedia system.

▶ Follow the steps in the Mercedes me App to register the unit identification number and activate the control unit.
After successful registration and activation, the toll system is ready for operation.

ⓘ When the toll system is activated, the number of vehicle occupants is first transmitted manually and is preset with one person.

ⓘ Activation of the toll system can take up to 48 hours after registration.

Registering and activating via app

▶ **In the MBUX multimedia system:** select ⌂.

▶ Select Apps.

▶ Select Toll Service.
The current activation status is displayed.

ⓘ More Info offers you further information.

▶ To start registration and activation, select Setup Service.

▶ Follow the directions in the app.

ⓘ Activation of the toll system can take up to 48 hours after registration.

Operation on the MBUX multimedia system

- Select [⌂].
- Select Settings.
- Select Driving.
- Select Toll System.
- Switch the toll system on or off.
  If you switch the toll system on or off, the number of vehicle occupants is preset to one person.
- Activate Detect Automatically.
  The number of seat belts worn is transmitted and displayed, e.g. 2.
- If this does not correspond to the number of vehicle occupants, use the number keys to select 1, 2 or 3+.

Operation with the Control Unit

- Open the glove box (→ page 39).

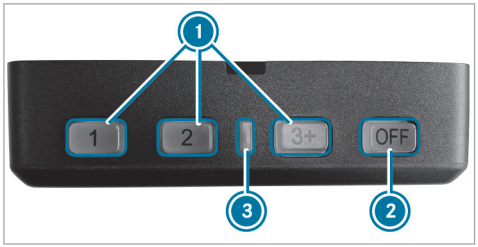

① Buttons for entering the number of vehicle occupants
The control unit is switched off: switches on the control unit
② Switches off the control unit
③ LED lights up green: control unit is ready for operation
LED flashes red: there is an error

- To enter the number of people in the vehicle, press one of buttons ①.
  This changes the automatic operation to manual operation.

ⓘ The number keys on the control unit correspond to the number keys in the Toll System menu.

Control unit is malfunctioning

If the control unit is malfunctioning, an acoustic signal will sound. Toll payment with the control unit cannot be made.

- Consult an authorized Mercedes-Benz Center.

Parking service

Notes on the parking service

! **NOTE** Damage to the vehicle due to not observing the maximum permitted headroom clearance

If the vehicle height is greater than the maximum permitted headroom clearance, the roof and other parts of the vehicle may be damaged.

- Observe the signposted headroom clearance.

- If the vehicle height is greater than the permitted headroom clearance, do not enter.
- Observe the changed vehicle height with add-on roof equipment.

ⓘ This service is not available in all countries.

Selecting parking options

! **NOTE** Vehicle damage due to failure to observe local information and parking conditions

The data is based on the information provided by the respective service providers.

Mercedes-Benz does not guarantee the accuracy of the information provided in relation to the car park or parking area.

- Always observe the local information and conditions.

Requirements

- Navigation Services is activated in your Mercedes me user account.
- The parking service is part of the scope of the Navigation Services.
- Parking is activated (→ page 451).

Multimedia system:

→ ⌂

- Tap on P the map.

or

- In the route overview, select P Parking Spaces (→ page 425).
- Select the search position and search filter, e.g. Near Destination and Parking Garages. The map shows parking lots suited to the selected settings.
- Select a parking option.

  The following information is displayed (if available):
  - Destination address, distance from current vehicle position and arrival time
  - Information on the parking lot, e.g.
    - Opening times
    - Parking charges
    - Current occupancy
    - Maximum parking time
    - **Maximum access height**

      The maximum access height shown by the parking service does not replace the need for observation of the actual circumstances.
  - Available payment options (Mercedes pay, coins, bank notes, cards)
  - Details on parking tariffs
  - Number of available parking spaces
  - Payment method (e.g. at parking meters)
  - Services/facilities at the parking option
  - Telephone number
- Calculate the route (→ page 422).

The following functions can be used (if available):

- Searching for POIs in the vicinity.
- Saving the destination.
- Placing a call at the destination.
- Sharing the destination via the QR code.

- Calling up the web address.
- Showing the destination on the map.

Displaying parking options on the map

Requirements

- Navigation Services is activated in your Mercedes me user account.
- The parking service is part of the scope of the Navigation Services.

Multimedia system:

Navigation

▶ Activate Parking.
The parking options within the vicinity of the current vehicle position are shown.

Dashcam

Notes on the dashcam

NOTE Risk of legal consequences due to violation of legal regulations and data protection provisions

You are legally responsible for operation and use of the dashcam functions.

The legal requirements relating to operation and use of the dashcam can vary depending on the country in which the dashcam is operated.

This function is not permitted in all countries.

▶ Before using the dashcam, read up on the content of the legal regulations, in particular the data protection requirements in the respective country of use.

▶ Observe the legal regulations, in particular the data protection requirements.

ⓘ Observe the following instructions for safe operation:

- Only use FAT32 or exFAT formatted USB storage devices.
- Use USB-IF certified USB storage devices.

  USB-IF is a non-profit corporation and stands for USB Implementers Forum. Based on the USB specification, USB-IF certifies, for example, USB versions, corresponding cables and plugs as well as energy supply processes via the USB interface.
- USB storage devices may be damaged if often or permanently overwritten at high speed. Mercedes-Benz recommends a high-quality external SSD drive.

  The abbreviation SSD stands for Solid State Drive.

ⓘ The file size and therefore the duration of single recording is limited by the limitations of the USB flash drive format. So FAT32 formatted USB flash drives do not allow files larger than 4 GB, for example.

When the file size is reached, the recording stops and you receive a notification.

ⓘ The following functions are available in the Gallery app:

- Switching write protection on or off
- Deleting video files

Additional information about the Gallery app (→ page 475).

Selecting a USB device for a video recording with the dashcam

Requirements

- At least one USB device is connected with the multimedia system (→ page 488).

Multimedia system:

↳ ⌂ » Apps » Dashcam

▶ Select the USB symbol.

▶ Select the USB device.

ⓘ When USB devices contain multiple partitions, recorded video files are not always displayed in the recording list.

Mercedes-Benz recommends that you use USB devices with one partition.

Starting or stopping video recording with the dashcam

Requirements

- For recording and saving a video file: a USB device is connected with the multimedia system (→ page 488).
- The vehicle is switched on.

Multimedia system:

↳ ⌂ » Apps » Dashcam

▶ If several USB devices are connected with the multimedia system, select a USB device (→ page 452).
If no USB device is selected, a selection is made automatically when recording starts.

▶ **To select a recording mode:** select Loop Recording or Individual Recording.
Loop Recording records several short video files. When the memory is full, recording is continued automatically. In doing so, other files will be overwritten starting with the oldest file.
Individual Recording stops recording when the memory limit is reached. An individual recording is automatically protected against being overwritten.

▶ **To start:** select Start Recording.
The length of the recording is shown. The Do not remove the storage medium during recording. Before removing the storage medium, eject it first. message appears. The video file is stored on the USB device.

▶ **To end:** select End Recording.

ⓘ In some countries, geo-coordinates (longitude and latitude) are shown in the video image. For technical reasons, the geo-coordinates may show greater inaccuracies.

A report may appear in the following cases:

- Individual Recording: the memory is full or there are only a few minutes recording time available. The video recording stops or will be stopped imminently.
  Change the USB device or delete a video file.

- The camera is not functional, the Camera Unavailable message appears.

  Have the camera checked in an authorized Mercedes-Benz Center.
- If the country border indication has been switched on (→ page 453).
- If an outdoor recording is started with the camera app during a dashcam recording, the dashcam recording pauses and resumes automatically after the camera recording is finished. A notification to this effect is displayed.

Configuring dashcam settings

Requirements

- A USB device is connected with the multimedia system (→ page 488).

Multimedia system:

→ ⌂ ▸▸ Apps ▸▸ Dashcam

▶ Select ⚙.

Receiving notifications after passing a border crossing

▶ Switch on National Borders Alert .
A message is shown if video is being recorded and the vehicle passes a border.

ⓘ This function is not available in all countries.

Starting automatic video recording

▶ Select Automatic Loop Recording.

▶ Activate Automatic Loop Recording.
When the vehicle is started, video recording starts automatically.

ⓘ This function is not available in all countries.

Telephone

Telephony

Notes on telephony

⚠ **WARNING** Risk of distraction from operating integrated communication equipment while the vehicle is in motion

If you operate communication equipment integrated in the vehicle when driving, you could be distracted from the traffic situation. This could also cause you to lose control of the vehicle.

▶ Only operate this equipment when the traffic situation permits.

▶ If you cannot be sure of this, stop the vehicle whilst paying attention to road and traffic conditions and operate the equipment with the vehicle stationary.

WARNING Risk of accident from operating mobile communication equipment while the vehicle is in motion

Mobile communication devices distract the driver from the traffic situation. This can also cause the driver to lose control of the vehicle.

- As a driver, only operate mobile communication devices when the vehicle is stationary.
- As a vehicle occupant, use mobile communication devices only in the designated area, e.g. in the rear passenger compartment.

You must observe the legal requirements for the country in which you are currently driving when operating the multimedia system and mobile communication equipment in the vehicle.

WARNING Risk of injury due to objects being stowed incorrectly

If objects in the vehicle interior are stowed incorrectly, they can slide or be thrown around and hit vehicle occupants. In addition, cup holders, open stowage spaces and mobile phone receptacles cannot always retain all objects within.

There is a risk of injury, particularly in the event of sudden braking or a sudden change in direction.

- Always stow objects so that they cannot be thrown around in such situations.
- Always make sure that objects do not protrude from stowage spaces, parcel nets or stowage nets.
- Close the lockable stowage spaces before starting a journey.
- Always stow and secure heavy, hard, pointed, sharp-edged, fragile or bulky objects in the trunk/cargo compartment.

Observe the additional information on stowing mobile communications devices correctly:

- Loading the vehicle (→ page 180)

Further information can be obtained from an authorized Mercedes-Benz Center or at: https://www.mercedes-benz-mobile.com/

Telephone menu overview



1. Bluetooth® device name of the currently connected mobile phone/of the mobile phone
2. Bluetooth® device name of the currently connected mobile phone/of the mobile phone (when several mobile phones are connected)
3. Signal strength of the mobile phone network
4. Battery status of the connected mobile phone
5. Options
6. Messages
7. Calls up devices
8. Numerical pad
9. Starts contact search

Bluetooth® profile overview

Bluetooth® profile of the mobile phone	Function
PBAP (**P**hone **B**ook **A**ccess **P**rofile)	Contacts are automatically displayed in the multimedia system
MAP (**M**essage **A**ccess **P**rofile)	Message functions can be used
HFP (**H**ands **F**ree **P**rofile)	Wireless telephony is available

Overview of mobile phone usage

Depending on the equipment up to four mobile phones can be connected at once:

- A mobile phone is connected to the multimedia system via Bluetooth® (→ page 456).
- Additional mobile phones are connected with the multimedia system via Bluetooth® (→ page 456).
  - You can use all the functions of the multimedia system with all mobile phones.

ⓘ Irrespective of this, Bluetooth® audio functionality can by used with any mobile phone (→ page 489).

Information on telephony

The following situations can lead to the call being disconnected while the vehicle is in motion:

- There is insufficient network coverage in the area
- You move from one transmission/reception station to another and no communication channels are free
- The SIM card used is not compatible with the network available
- A mobile phone with "Twincard" is logged into the network with the second SIM card at the same time

The multimedia system supports calls in HD Voice® for improved speech quality. A requirement for this is that the mobile phone and the mobile phone network provider of the person you are calling support HD Voice® .

Depending on the quality of the connection, the voice quality may fluctuate.

Connecting a mobile phone

Requirements

- Bluetooth® is activated on the mobile phone (see the manufacturer's operating instructions).
- Bluetooth® is activated on the multimedia system (→ page 398).

Multimedia system:

→ ⌂ ▸▸ Phone ▸▸ ⚙ ▸▸ Devices ▸▸ Devices

Searching for a mobile phone

▶ Select Connect New Device.

Authorizing a mobile phone

▶ Select a mobile phone.
A code is displayed in the multimedia system and on the mobile phone.

▶ **If the codes match:** confirm the code on the mobile phone.

ⓘ For older mobile phone models, enter a 1 to 16-digit number code on the mobile phone and on the multimedia system for authorization.

ⓘ Up to 15 mobile phones can be authorized on the multimedia system.

ⓘ Up to four of the mobile phones activated in the driver's user profile are automatically reconnected.

ⓘ A mobile phone can be used by the driver and front passenger as a Bluetooth® audio device (→ page 489).

You can watch an animation on this topic via the following link:

Connecting an additional mobile phone

Requirements

- At least one mobile phone is already connected to the multimedia system via Bluetooth®.

Multimedia system:

→ ⌂ ▸▸ Phone ▸▸ ⚙ ▸▸ Devices ▸▸ Devices

▶ Select Connect New Device.

▶ Select the mobile phone.

Switching between mobile phones

Multimedia system:

→ ⌂ ▸▸ Phone

The connected mobile phones are shown individually in separate tabs.

▶ Select the tab with the desired mobile phone.
Selecting the tab of a specific mobile phone displays the associated telephone contents.

Selecting the other tab switches the view to the other telephone.

The submenus in the Phone menu (e.g. contacts, call lists, messages) relate to the cur-

rently selected mobile phone with the exception of the telephone settings. In the telephone settings, settings can be made for both mobile phones.

Changing the function of a mobile phone

Multimedia system:

Phone ▸▸ Devices ▸▸ Devices

Activating a function

- Select the gray symbol for the required function in the line of a mobile phone.
  The corresponding function is activated.

Deactivating a function

- **One function is active:** select the color symbol in the line of a mobile phone.
  The mobile phone is disconnected from the multimedia system.
- **Several functions are active:** de-select an active function in the line of one of the mobile phones.
  The corresponding function is deactivated.

Deleting a mobile phone

Multimedia system:

Phone ▸▸ Devices

- Select Devices.
- Select ••• in the line of the mobile phone.
- Select Delete Device.
  The mobile phone is deleted from the system.

Starting or stopping mobile phone voice recognition

Requirements

- At least one mobile phone is connected to the multimedia system (→ page 456).
- The tab with the mobile phone for which voice recognition should be started is selected (→ page 456).

Starting mobile phone voice recognition

- Press and hold the button on the multifunction steering wheel for more than one second.
  Voice recognition is started for the currently selected mobile phone.

Stopping mobile phone voice recognition

- Press the or button on the multifunction steering wheel.

ⓘ If a mobile phone is connected via Smartphone Integration, the voice recognition of this mobile phone is always started or stopped.

Note about contact suggestions

The multimedia system can show contact suggestions based on frequently used contacts, outgoing calls and text messages. For this, the Allow Contact Suggestions option must be switched on (→ page 400).

When you open the call list or the message menu, contacts which you can call or write to will be suggested to you. Suggestions will be shown in the Suggestionstab.

ⓘ The multimedia system does not use the content of messages for suggestions.

Selecting options for contact suggestions

Requirements

- The Allow Contact Suggestions option is switched on (→ page 400).
- The multimedia system has gathered sufficient data in order to show contact suggestions.

Multimedia system:

↳ Home ▸▸ Phone

- ▶ Select Recent Calls or Contacts.
- ▶ Select Suggestions.
- ▶ Select ••• in the line of the suggested contact.

  The following option is available for selection:
  - Do Not Suggest Now

Calls

Telephone operation

Multimedia system:

↳ Home ▸▸ Phone

Making a call by entering numbers

- ▶ Select Keypad.
- ▶ Enter a number.
- ▶ Select Call.

  The call is made.

Accepting a call

- ▶ Select Call Accept.

Rejecting a call

- ▶ Select End Call Reject.

Answering a call with a message

- ▶ Select Reply.

Ending a call

- ▶ Select End Call.

Activating functions during a call

The following functions are available during a call:

- End Call
- Mic Off
- Number Pad (show to send DTMF tones)
- Add Call
- Hands-free

  Transfer the call, e.g. to Front, Rear or All Seats.
- Private Mode

  Transfer the call the telephone or headphones, for example.

- ▶ Select a function.

ⓘ Observe that the functions and symbols can vary depending on the vehicle equipment.

Conducting calls with several participants

Requirements:

- There is an active call (→ page 458).
- Another call is being made.

Switching between calls

▶ Select the contact.
The selected call is active. The other call is on hold.

Activating a call on hold

▶ Select the contact of the call on hold.

Conducting a conference call

▶ Select Conference.
The new participant is included in the conference call.

Ending an active call

▶ Select End Call.

ⓘ On some mobile phones, the call on hold is activated as soon as the active call is ended.

Accepting or rejecting a waiting call

Requirements:
- There is an active call (→ page 458).

If you receive a call while already in a call, a message is displayed.

Depending on the mobile phone and mobile phone network provider you will hear a call waiting signal.

If several mobile phones are connected, you will hear an acoustic signal when the call goes through to the other (not yet active) mobile phone.

▶ Select Accept.
The incoming call is active.

If only one mobile phone is connected with the multimedia system, the previous call will be put on hold.

If several mobile phones are connected and during a call you accept a call with the other mobile phone then the existing call is ended.

or

▶ Select Reply.
The incoming call is not accepted.

You answer with a message.

or

▶ Select Reject.

ⓘ The function and the behavior depend on your mobile phone network provider as well as on the mobile phone (see the manufacturer's operating instructions).

Contacts

Information about the contacts menu

The contacts menu contains all contacts from existing data sources, e.g. a mobile phone or data storage medium.

Depending on the data source, it is possible to save/load the following number of contacts:

- Permanently saved contacts: 3,000 entries
- Contacts loaded from the mobile phone: 5,000 entries per mobile phone

From the contacts menu, you can perform the following actions:

- Make a call, for example call a contact (→ page 460)
- Navigation (→ page 419)
- Compose messages (→ page 462)
- Additional options (→ page 460)

Mobile phone contacts are automatically displayed when a mobile phone is connected to the multimedia system (→ page 456).

Downloading mobile phone favorite contacts
If the mobile phone supports the function, the favorites of the mobile phone are automatically loaded and appear in the overview of the phone menu.

Calling up contacts

Multimedia system:

→ ⌂ ▸▸ Phone ▸▸ Contacts

The following options can be used to search for contacts:

- Searching by initials
- Searching by name
- Searching by phone number

▶ Enter characters into the search field.
▶ Select the contact.

A contact can contain the following details:

- Phone numbers
- Navigation addresses
- Internet address
- Email addresses
- Relationship (if set)

Managing the format of a contact's name

Multimedia system:

→ ⌂ ▸▸ Phone ▸▸ ⚙

▶ Select Name Format.
▶ Select an option.

Saving a mobile phone contact

Multimedia system:

→ ⌂ ▸▸ Phone ▸▸ Contacts

▶ Select ❯ in the line of the mobile phone contact.
▶ Select •••.
▶ Select Save.
▶ Select Yes.
The contact saved in the multimedia system is identified by the MBUX symbol.

Calling a contact

Multimedia system:

→ ⌂ ▸▸ Phone ▸▸ Contacts

▶ Select 🔍 Search for Contacts.
▶ Enter characters into the search field.
▶ Select the contact.
▶ Select the telephone number.
The number is dialed.

Selecting further options in the contacts menu

Multimedia system:

→ ⌂ ▸▸ Phone ▸▸ Contacts

▶ Select ❯ in the line of the contact.
▶ Select •••.
▶ Select an option.

Deleting contacts

Requirements

- The contacts are saved in the vehicle.
- To delete an individual contact, this has been imported manually into the vehicle.

Multimedia system:

Phone

Deleting all contacts

- Select ⚙.
- Select Contacts.
- Select Delete All MBUX Contacts.
- Select an option.

Deleting a contact

- Select Contacts.
- Select ❯ in the line of the contact.
- Select •••.
- Select Delete Contact.
- Select Yes.

Call list

Overview of the call list

Depending on whether your mobile phone supports the Bluetooth® PBAP profile or not, the form and function of the call list differs as follows.

If the PBAP Bluetooth® profile is supported, the effects are as follows:

- The call lists from the mobile phone are displayed in the multimedia system.
- When connecting the mobile phone, you may have to confirm the connection for the PBAP Bluetooth® profile.

If the PBAP Bluetooth® profile is not supported, the effects are as follows:

- The multimedia system generates a call list independently as soon as calls are made in the vehicle.
- The call list is not synchronized with the call lists in the mobile phone.

Making a call from the call list

Multimedia system:

Phone

- Select Recent Calls.
- Select an entry.
  The call is made.

Selecting additional options in the call list

Multimedia system:

Phone

- Select Recent Calls.
- For contacts that are in the address book: select options.
  The contact details are called up.
- For contacts where only one number is shown (not in the address book): select 💬.

Deleting the call list

Multimedia system:

Phone <Device name> ⚙ Devices

- Select Delete Recent Calls.
- Select Yes.

ⓘ This function is only available if your mobile does not support the PBAP Bluetooth® profile.

Text messages

Overview of message functions

In the message menu you can receive text messages and Apple iMessages and create and send them with the help of the MBUX voice assistant.

If the connected mobile phone supports the Bluetooth® MAP profile, the message function can be used on the multimedia system.

You can obtain further information about settings and supported functions of Bluetooth®-capable mobile phones at a Mercedes-Benz service center or at: https://www.mercedes-benz-mobile.com/

Some mobile phones require further settings after being connected to the multimedia system to activate the messaging functionality (see manufacturer's operating instructions).

Setting message displays

Multimedia system:

Phone ▸▸ <Device name> ▸▸ Devices

- Select Message Display.
- Select On or Off.

Reading messages

Multimedia system:

Phone ▸▸ <device name>

Using the read-aloud function

A message list is shown.

- To read aloud, select the symbol at a conversation.
  The message is read aloud.

Creating and sending a new message

Requirements

- There is an Internet connection.

Multimedia system:

Phone ▸▸ <Device name>

- Using the MBUX voice assistant, speak the voice command **Send a message to**, and name the desired contact (→ page 360).

Dictating text

- Say the message.
  You are guided by the voice dialog.

Replying to a message in the messaging history

Multimedia system:

Phone ▸▸ <device name>

A message list is shown.

- Select next to a contact.
  The messaging history with this contact is shown. You will be guided through the steps with the help of a voice dialog.
- Select .
  The dictation function is started.
- Say the message.
  After the voice message has been processed, it is shown as text.
- Select Send or speak in the dialog.

Forwarding messages

Multimedia system:

Phone ▸▸ <Device name>

A message list is shown.

- Speak the voice command **Forward message**.
  You are guided by the voice dialog.

Calling a message sender

Multimedia system:

→ ⌂ ▸▸ Phone ▸▸ <device name> ▸▸ ✉

A message list is shown.

- Select ❯ next to a contact.
  The messaging history with this contact is shown.
- Select •••.
- Select Call.

Using telephone numbers, URLs or email addresses from a text message

Requirements

- An Internet connection is available to call up a URL.

Multimedia system:

→ ⌂ ▸▸ Phone ▸▸ <Device name> ▸▸ ✉

A message list is shown.

- Select ❯ next to a contact.
  The messaging history with this contact is shown.
- Select a telephone number or a URL in the message.
  If a URL is selected the web browser opens.
  If a telephone number is selected the following options are available:
  - Call
  - New Message
- Select an option.

Deleting a message

Multimedia system:

→ ⌂ ▸▸ Phone ▸▸ <device name> ▸▸ ✉

A message list is shown.

- Select a contact.
- Press and hold on a message.
- **To delete the message:** select Delete.

Apple CarPlay®

Overview of Apple CarPlay®

⚠ WARNING Risk of distraction from information systems and communications equipment

If you operate information systems and communication devices integrated in the vehicle when driving, you could be distracted from the traffic situation. This could also cause you to lose control of the vehicle.

- Only operate this equipment when the traffic situation permits.
- If you cannot be sure of this, stop the vehicle whilst paying attention to road and traffic conditions and operate the equipment with the vehicle stationary.

You must observe the legal requirements for the country in which you are currently driving when operating the multimedia system.
iPhone® functions can be used via the multimedia system using Apple CarPlay®. They are operated using the touchscreen, Touch Control or Siri®

voice control. You can activate voice control by pressing and holding the button on the multifunction steering wheel.

ⓘ By briefly pressing the button on the multifunction steering wheel you can continue to operate the multimedia system using the MBUX Voice Assistant (→ page 360).

Only one iPhone® at a time can be connected via Apple CarPlay® with the multimedia system.

As access to the iPhone® is restricted by MBUX when a CarPlay® session is active, not all MBUX functions (e.g. dialing from the address book) can be fully provided for the connected device. In this case use Apple CarPlay®.

The full range of functions for Apple CarPlay® is only available with an Internet connection.

The availability of Apple CarPlay® may vary according to the country.

The service provider is responsible for this application and the services and content connected to it.

Apple CarPlay® is a registered trademark of Apple Inc.

You can watch an animation on this topic via the following link:

Information on Apple CarPlay®

The Apple CarPlay® symbol in the status line switches within Apple CarPlay® to the last active display.

If route guidance is active on the multimedia system, it is closed when route guidance is started on the mobile phone.

Connecting an iPhone® via Apple CarPlay® (cable)

Requirements

- The current version of your device's operating system is being used (see the manufacturer's operating instructions).

ⓘ For safety reasons, the first activation of Apple CarPlay® on the multimedia system must be carried out when the vehicle is stationary and the parking brake applied.

▶ Connect the iPhone® to a USB port on the multimedia system using a suitable cable (→ page 488).
When the application is connected for the first time, a message about data protection regulations appears.

▶ Select Accept & Start if the application should be started.

or

▶ Open the device manager (→ page 456).

▶ Start Apple CarPlay® using the relevant symbol next to the device name.

ⓘ If applicable, a message about data protection regulations appears.

▶ If required confirm the use of Apple CarPlay® on your iPhone®.

Exiting Apple CarPlay®

▶ Select .

or

▶ Press the button on the Touch Control (MBUX multimedia system).

ⓘ If Apple CarPlay® was not displayed in the foreground before disconnecting, the application starts in the background when reconnected. You can call up Apple CarPlay® using the Apple CarPlay® symbol in the status line.

Connecting an iPhone® via Apple CarPlay® (wireless)

Requirements:

- The current version of your device's operating system is being used (see the manufacturer's operating instructions).
- Bluetooth® is activated on the device (see the manufacturer's operating instructions).
- The device is "visible" for other devices.

ⓘ For safety reasons, the first activation of Apple CarPlay® on the multimedia system must be carried out when the vehicle is stationary and the parking brake applied.

Multimedia system:

↪ ⌂ » Phone » ⚙ » Devices

▶ Connect the mobile phone using Bluetooth® (→ page 456).
When the application is connected for the first time, a message about data protection regulations appears.

▶ Select OK, start Apple CarPlay if the application should be started.

▶ If required confirm the use of Apple CarPlay® on your iPhone®.

ⓘ It is possible at any time to switch between a connection via Bluetooth® or Apple CarPlay® (wireless) in the device list.

ⓘ If you have already connected a mobile phone via Bluetooth®, you can connect another iPhone® via Bluetooth® to use Apple CarPlay® via the device manager.

Exiting Apple CarPlay®

▶ Select ⌂.

or

▶ Press the ⌂ button on the Touch Control (MBUX multimedia system).

ⓘ If Apple CarPlay® was not displayed in the foreground before disconnecting, the application starts in the background when reconnected. You can call up Apple CarPlay® using the Apple CarPlay® symbol in the status line.

Calling up Apple CarPlay® sound settings

Multimedia system:

↪ ⌂ » Settings » System » Audio

▶ Select the sound settings.

Ending Apple CarPlay®

▶ Select the Apple CarPlay® symbol in the device manager (telephone, media) that is next to the device name of the iPhone®.

ⓘ Select the Apple CarPlay® symbol in the device manager in the telephone or media applications if Apple CarPlay® should be restarted.

ⓘ If Apple CarPlay® was not displayed in the foreground before disconnecting, the application starts in the background the next time it is started automatically. You can call up Apple CarPlay® using the relevant symbol in the status line.

Android Auto

Android Auto overview

⚠ WARNING Risk of distraction from information systems and communications equipment

If you operate information systems and communication devices integrated in the vehicle when driving, you could be distracted from the traffic situation. This could also cause you to lose control of the vehicle.

- ▶ Only operate this equipment when the traffic situation permits.
- ▶ If you cannot be sure of this, stop the vehicle whilst paying attention to road and traffic conditions and operate the equipment with the vehicle stationary.

You must observe the legal requirements for the country in which you are currently driving when operating the multimedia system.
Mobile phone functions can be used with Android Auto using the Android operating system on the multimedia system. They are operated using the touchscreen, Touch Control or voice control. You can activate the voice control system by pressing and holding the button on the multifunction steering wheel.

ⓘ By briefly pressing the button on the multifunction steering wheel you can continue to operate the multimedia system using the MBUX Voice Assistant (→ page 360).

Only one mobile phone at a time can be connected via Android Auto with the multimedia system.

The full range of functions for Android Auto is only possible with an Internet connection.

The availability of Android Auto and Android Auto apps may vary according to the country.

The service provider is responsible for this application and the services and content connected to it.

You can watch an animation on this topic via the following link:

Information on Android Auto

The Android Auto symbol in the status line switches within Android Auto to the last active display.

If route guidance is active on the multimedia system, it is closed when route guidance is started on the mobile phone.

Connecting a mobile phone via Android Auto (wired)

Requirements

- The mobile phone supports Android Auto from Android 5.0.
- The current version of the Android Auto app is installed on the mobile phone.
- In order to use the telephone functions, the mobile phone must be connected to the multimedia system via Bluetooth® (→ page 456).

If there was no prior Internet connection, this is established with the use of the mobile phone with Android Auto.

ⓘ For safety reasons, the first activation of Android Auto on the multimedia system must be carried out when the vehicle is stationary with the parking brake.

▶ Connect the mobile phone to a USB port on the multimedia system using a suitable cable (→ page 488).
When the application is connected for the first time, a message about data protection regulations appears.

▶ Select Accept & Start if the application should be started.

or

▶ Open the device manager (→ page 456).
▶ Start Android Auto using the relevant symbol next to the device name.

Exiting Android Auto

▶ Select ⌂.

or

▶ Press the ⌂ button on the Touch Control (MBUX multimedia system).

ⓘ If Android Auto was not displayed in the foreground before disconnecting, the application starts in the background when reconnected. You can call up Android Auto using the Android Auto symbol in the status line.

Connecting a mobile phone via Android Auto (wireless)

Requirements

- The current version of your device's operating system is being used (see the manufacturer's operating instructions).
- The device supports the Android Auto function (wireless).
- Bluetooth® is activated on the device (see the manufacturer's operating instructions).
- The device is "visible" for other devices.
- Bluetooth® is activated on the multimedia system (→ page 398).

ⓘ For safety reasons, the first activation of Android Auto on the multimedia system must be carried out when the vehicle is stationary with the parking brake.

ⓘ The Android Auto function (wireless) is not available in all countries.

Multimedia system:

↝ ⌂ » Phone » ⚙ » Devices

▶ Connect the mobile phone using Bluetooth® (→ page 456).

ⓘ Depending on the device configuration, the query whether Android Auto should be started may appear on the central display after connecting the mobile phone via Bluetooth®. In this case, the query must be answered with Yes.

▶ Select Start Android Auto.
When the application is connected for the first time, a message about data protection regulations appears.

▶ Select Accept & Start.

ⓘ It is possible at any time to switch between connection via Bluetooth® or Android Auto (wireless) in the device list.

ⓘ If you have already connected a mobile phone via Bluetooth®, you can connect additional mobile phones via Bluetooth® to use Android Auto via the device manager.

Exiting Android Auto

▶ Select ⌂.

or

▶ Press the ⌂ button on the Touch Control (MBUX multimedia system).

ⓘ If Android Auto was not displayed in the foreground before disconnecting, the application starts in the background when reconnected. You can call up Android Auto using the Android Auto symbol in the status line.

Calling up the Android Auto sound settings

Multimedia system:

⌂ ▸▸ Settings ▸▸ System ▸▸ Audio

▶ Select the sound settings.

Ending Android Auto

▶ Select the Android Auto symbol in the device manager (telephone, media) that is next to the device name of the mobile phone.

ⓘ Select the Android Auto symbol in the device manager if Android Auto should be restarted.

ⓘ If Android Auto was not displayed in the foreground before disconnecting, the application starts in the background the next time it is started automatically. You can call up Android Auto using the Android Auto symbol in the status line.

Transferred vehicle data with Android Auto and Apple CarPlay®

Overview of transferred vehicle data

When using Smartphone Integration, certain vehicle data is transferred to the mobile phone. This enables you to get the best out of selected mobile phone services. Vehicle data is not directly accessible.

The following system information is transmitted:

- Software release of the multimedia system
- System ID (anonymized)

The transfer of this data is used to optimize communication between the vehicle and the mobile phone.

To do this, and to assign several vehicles to the mobile phone, a vehicle identifier is randomly generated.

This has no connection to the vehicle identification number (VIN) and is deleted when the multimedia system is reset (→ page 404).

The following driving status data is transmitted:

- Transmission position engaged
- Distinction between parked, standstill, rolling and driving
- Day/night mode of the driver's display
- Drive type

The transfer of this data is used to alter how content is displayed to correspond to the driving situation.

The following position data is transmitted:

- Coordinates
- Speed
- Compass direction
- Acceleration direction

This data is used by the mobile phone to improve the accuracy of the navigation (e.g. for continuation in a tunnel).

Mercedes me calls

Making a call via the overhead control panel

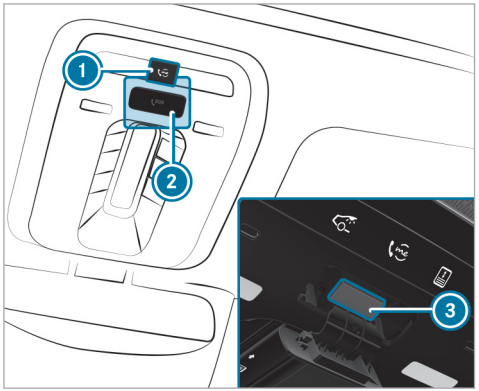

1 me button for service or information calls
2 SOS button cover
3 SOS button (emergency call system)

Making a Mercedes me call

- Press me button 1.

F214 0032 13

Making an emergency call

- To open the cover of SOS button 2, press it briefly.
- Press and hold SOS button 3 for at least one second.

If a Mercedes me call is active, an emergency call can still be triggered. This has priority over all other active calls.

Information about the Mercedes me call using the me button

A call to the Mercedes-Benz Customer Center has been initiated via the me button in the overhead control panel or the multimedia system (→ page 469).

Using the voice dialog system you access the desired service:

- Accident and Breakdown Management
- Mercedes-Benz Customer Center for general information about the vehicle

You can find information on the following topics:

- Activation of Mercedes me connect
- Operating the vehicle

- Nearest authorized Mercedes-Benz Center
- Other products and services from Mercedes-Benz

Data is transferred during the connection to the Mercedes-Benz Customer Center (→ page 471).

Calling the Mercedes-Benz Customer Center using the multimedia system

Requirements

- Access to a GSM network is available.
- The contract partner's GSM network coverage is available in the respective region.
- The vehicle must be switched on so that vehicle data can be transferred automatically.

Multimedia system:



▶ Call Mercedes me connect.
After confirmation, the multimedia system sends the required vehicle data. The data transfer is shown in the display.

Then you can select a service and be connected to a specialist at the Mercedes-Benz Customer Center.

Calling the Mercedes-Benz Customer Center after automatic accident or breakdown detection

Requirements:

- The vehicle has detected an accident or breakdown situation (→ page 271).
- The vehicle is stationary.
- The hazard warning lights are switched on.

ⓘ This function is not available in all countries.

The vehicle can detect accident or breakdown situations under certain circumstances.

Requirements for collision detection in the context of accident recovery:

- The vehicle is equipped with an anti-theft alarm system (ATA) (code 551).
- The vehicle is equipped with the interior protection (code 882).
- The vehicle is equipped with the Anti-Theft Protection Package (code P54).
- The collision detection service with theft notification has been activated on Mercedes me connect.

If a collision is detected when the tow-away alarm is armed on a locked vehicle, you will receive a notification in the multimedia system when you switch the vehicle on.

The message informs you about the potentially affected area of the vehicle and the strength of the collision.

In the event an accident or breakdown is detected, the emergency guide shows safety notes in the multimedia system display. This may take a few seconds.

ⓘ The availability of collision detection depends on the vehicle.

After quitting the emergency guide display on the multimedia system, a prompt appears asking whether you would like to get support from the Mercedes-Benz Customer Center.

▶ Select Call.
- After your agreement, or if the Mercedes me connect service "Accident and Break-

down Management" is active, the vehicle data is transferred automatically (→ page 473).

- The Mercedes-Benz Customer Center takes your call and organizes the breakdown and accident assistance.

You may be charged for these services.

ⓘ Depending on the severity of the accident, an automatic emergency call can be initiated. This has priority over all other active calls (→ page 478).

ⓘ In addition, if the Mercedes me connect service "Telediagnostics" is active, a similar prompt can appear after a delay in the event of a breakdown. If you are already in contact with the Mercedes-Benz Customer Center or have already received support, this prompt can be ignored or declined.

ⓘ If you answer the prompt for support from the Mercedes-Benz Customer Center with Call Later, the message will be hidden and appear again later.
The prompt triggered by the Mercedes me connect service "Telediagnostics", can either be confirmed or declined. After being declined, this will not be shown again.

Arranging a service appointment via a Mercedes me call

If you have activated the maintenance management service, relevant vehicle data is transferred automatically to the Mercedes-Benz Customer Center. You will then receive individual recommendations regarding the maintenance of your vehicle.

Regardless of whether you have consented to the maintenance management service, the multimedia system reminds you after a certain amount of time that a service is due. A prompt appears asking if you would like to make an appointment.

▶ **To arrange a service appointment:** select Call. After your consent, the vehicle data is transferred and the Mercedes-Benz Customer Center takes your preferred appointment date. The information is then sent to your desired service outlet.

This will contact you to confirm the appointment and if necessary consult about the details.

ⓘ If you select Call Later after the service message appears, the message is hidden and reappears at a later time.

Data transferred during a Mercedes me call

If you initiate a service call using Mercedes me, data is transferred to enable targeted advice and an efficient service.

The following requirements must be fulfilled for the transfer of the data:

- The vehicle is switched on.
- The required data transfer technology is supported by the mobile phone network provider.
- The quality of the mobile connection is sufficient.

Multi-stage transfer depends on the following factors:

- Reason for the initiation of the call
- The available mobile phone transmission technology
- The activated Mercedes me connect services
- The service selected in the voice control system

ⓘ The scope of the data transmitted depends on the vehicle model and equipment. For technical reasons, not all data is available at all times.

Data transfer if Mercedes me connect services are not activated

If no Mercedes me connect services are activated, the following data is transferred:

- Vehicle identification number
- Time of the call
- Reason for the initiation of the call
- Confirmation of the data protection prompt
- Country indicator of the vehicle
- Set language for the multimedia system
- Telephone number of the communication platform installed in the vehicle

If a call is made for a service appointment via the service reminder, the following data is also transmitted:

- Current mileage and maintenance data

If a call is made after automatic accident or breakdown detection using the multimedia system, the following data is also transmitted:

- Current mileage and maintenance data
- Current vehicle location

If Accident and Breakdown Management is called via the voice control system, the following data can also be called up from the vehicle by the Mercedes-Benz Customer Center:

- Current vehicle location

Data processing

The data transmitted within the scope of the call is deleted from the processing system after the call is finished, in so far as this data is not being used for other activated Mercedes me connect services.

The incident-specific data is processed and stored in the Mercedes-Benz Customer Center and, if required to process the incident, forwarded to the service partner authorized by the Mercedes-Benz Customer Center. Take note of the data protection information on the Mercedes me Internet page https://www.mercedes.me or in the recorded message immediately after calling the Mercedes-Benz Customer Center.

ⓘ The recorded message is not available in every country.

Mercedes me connect

Information on Mercedes me connect

Mercedes me connect consists of multiple services.

You can use the following services via the multimedia system and the overhead control panel, for example:

- Accident and Breakdown Management (me button or situation-dependent display in the multimedia system)
- Mercedes-Benz Emergency Call System (automatic emergency call and SOS button)

The Mercedes me connect Accident and Breakdown Management and the Mercedes-Benz emergency call center are available to you around the clock.

The me button and the SOS button can be found on the vehicle's overhead control panel (→ page 469).

You can also call the Mercedes-Benz Customer Center using the multimedia system (→ page 470).

Please note that Mercedes me connect is a Mercedes-Benz service. In emergencies, first call the national emergency services using the standard national emergency service telephone numbers. In emergencies, you can also use the Mercedes-Benz emergency call system (→ page 57).

Please note the Mercedes me connect terms of use and the data protection information for Mercedes me connect. You can find these in your Mercedes me user account.

Further information about Mercedes me connect services can be obtained in the Mercedes me Portal: https://me.secure.mercedes-benz.com

Information on Mercedes me connect Accident and Breakdown Management

ⓘ Accident and Breakdown Management is not available in every country. Contact an authorized Mercedes-Benz Center to find out whether this function is available in your country.

The Accident and Breakdown Management can include the following functions:

- Supplement to the Mercedes-Benz emergency call system (→ page 57)

  If necessary, the contact person at the Mercedes-Benz emergency call center forwards the call to Mercedes me connect Accident and Breakdown Management. Forwarding the call is however not possible in all countries.
- Breakdown assistance by a technician on location and/or the towing away of the vehicle to the nearest authorized Mercedes-Benz Center

  You may be charged for these services.
- Addition to the emergency guide after automatic accident or breakdown detection (→ page 470)

  In the event of a breakdown or accident, further vehicle data is sent which enables optimal support by the Mercedes-Benz Customer Center and the authorized service partner or breakdown assistance.
- Addition to the Mercedes me connect service Telediagnostics

  With the Telediagnostics function, specific wear and failure reports are recorded by the service provider, in so far as these can be clearly interpreted and are available through the monitoring of components that are subject to diagnostics.

  If your vehicle detects a breakdown or threat of a breakdown, you may be prompted via the multimedia system to contact the Mercedes-Benz Customer Center for further help. This prompt in the multimedia system only appears when the vehicle is stationary.

ⓘ These services are subject to technical restrictions such as the mobile phone coverage, mobile network quality and the ability of the processing systems to interpret the transferred data. In some circumstances, this can result in delays or the failure of the information to appear in the multimedia system.

Please note that the service and breakdown call is a Mercedes-Benz service. In emergencies, be sure to contact the usual national emergency number first or use the Mercedes-Benz emergency call system (→ page 477).

More information about Mercedes me connect services can be obtained in the Mercedes me Portal: https://me.secure.mercedes-benz.com

Data transferred during Mercedes me connect call services

The data transferred during a Mercedes me connect call depends on:

- The reason for initiation of the call
- The service that is selected in the voice control system
- The activated Mercedes me connect services

You can find out which data is transferred when using the services in the currently valid Mercedes me connect terms of use and the data protection information for Mercedes me connect. You can find these in your Mercedes me user account.

Mercedes me Apps

Information about Mercedes me

With a Mercedes me user account you have access to Mercedes-Benz services and offers.

Availability is dependent both on the country and equipment.

You can obtain further information at an authorized Mercedes-Benz Center or in the Mercedes me Portal: https://me.secure.mercedes-benz.com

Further information about on-demand features via Mercedes me can be found in the "General notes" section (→ page 81).

ⓘ Make sure you always keep the Mercedes me Apps updated.

Calling up the Mercedes me user account

Multimedia system:

↪ ⌂ ▸▸ Apps ▸▸ Mercedes me

Vehicle is linked to user account and Mercedes me is available

▶ Select Mercedes me ID.
Information about the linked user account appears.

Your vehicle is not linked to the user account

ⓘ If you do not yet have a Mercedes me user account, you can create one at: https://www.mercedes.me or in the Mercedes me App. A valid email address or phone number is required for this.

▶ Select ⌂.

▶ Select Apps.

▶ Select Mercedes me.

▶ Follow the instructions on the display to link the user account with the vehicle.

ⓘ If the Mercedes me App is available on a mobile phone, the vehicle connection can be accomplished using the QR code shown.

Calling up the Mercedes me services

Requirements:
- The vehicle is connected with the user account.

Multimedia system:

→ ⌂ ▸▸ Apps ▸▸ Mercedes me

▶ Select My Services.
The Mercedes me connect services for which you have a valid license are displayed in alphabetical order.

Ordering or extending Mercedes me connect services

To order or renew Mercedes me connect services, use the Store.

▶ Select ⌂.

▶ Select Store.

Deleting a connection between a user account and the vehicle

Requirements
- The user profile of the user account that was first linked to the vehicle is selected.
- The user profile is synchronized (→ page 383).
- A Mercedes me PIN has been set.

Multimedia system:

→ ⌂ ▸▸ Apps ▸▸ Mercedes me

▶ Select Mercedes me ID.

▶ Select Delete vehicle connection.

ⓘ Only the user, whose user account was first connected with the vehicle can delete the connection between all user accounts and the vehicle.

Selecting apps

Requirements
- Depending on the app, the general terms and conditions are confirmed.

Multimedia system:

→ ⌂ ▸▸ Apps

▶ Select an app.

The following apps are available, for example:
- Weather
- Browser
- Additional apps, which are purchased or installed subsequently

ⓘ You can also access both of the first two apps via the quick access at Apps.

ⓘ The available features are country-dependent. License fees may be applicable.

The following functions are available for apps, for example:
- Search function
- Filter function, for displaying search results at the current vehicle position or at the destination
- Display of detailed information
- Read-aloud function
- Setting functions

Using the Gallery app

Requirements:
- **For use of the share content function:**
  - The Mercedes me App is installed on the device, e.g. a mobile phone or a tablet.

- For Internet connection, the multimedia system is used as a Wi-Fi hotspot (→ page 398).

Multimedia system:

→ [⌂] » Apps

▶ Select Gallery.

Images and video recordings are displayed from the following sources, for example:

- Dashcam video recordings
- Collision detection images
- Video recordings and images from other available sources
- Camera app
- Favorites

▶ Select a tab.

ⓘ The Gallery app is also available on the front passenger display.

Filtering displays

▶ Select [⚙].

▶ Select an option.
All files, all images or all video recordings are displayed.

Playing back a video recording

▶ Select [▶].
Playback starts.

▶ **To continue playback in full screen mode:** tap on the display.

▶ **To pause playback:** select [⏸].

▶ **To continue playback from the desired position:** move the [⦿] position on the timeline by sliding it.

▶ **To select the previous or next video recording:** swipe to the right or left.

Scrolling and zooming images

▶ **To scroll:** swipe on the image in one direction.

▶ **To zoom:** tap twice in quick succession on an image.

▶ **To select the previous or next image:** swipe to the right or left.

Adding or removing a file from the favorites

▶ Press and hold on a file.

▶ Select Add to Favorites/Remove from Favorites.
A corresponding message appears.

Switching write protection on or off

ⓘ Active write protection is not supported by every app.

▶ Press and hold on a file.

▶ Activate [⬬] or deactivate [⬬] Write Protection.

Deleting files

▶ Select [✎].

▶ **To delete a single file:** tap on a file.
[✓] will appear.

▶ **To delete all files:** tap on [☰✓].

▶ **To delete:** select [🗑].
A prompt appears.

▶ Select Yes.

ⓘ A single file can be deleted even after a long press on the file.

Connecting the device to the MBUX multimedia system to use the share content function

- Select the share function in the Mercedes me App on the device.
  A QR code is displayed on the MBUX multimedia system.
- Scan the QR code with the device.
  A numerical code is displayed on the MBUX multimedia system.
- Enter the numerical code on the device.
  The connection is established and the device is available in the vehicle.

Sharing content with a connected device

- Select [•••].
- Choose the content that you wish to share.
  The content is marked with a tick.
- Select [✓].
- Select the device to which the content is to be transferred.
  The transferred content is stored in the Mercedes me App, not in the memory of the device.

Mercedes-Benz emergency call system

Information on the Mercedes-Benz emergency call system

Your vehicle is equipped with the Mercedes-Benz emergency call system (“eCall”). This feature can help save lives in the event of an accident. eCall in no way replaces assistance provided from dialing 911.

Mercedes-Benz eCall only functions in areas where mobile phone coverage is available from the wireless service providers. Insufficient network coverage from the wireless service providers may result in an emergency call not being transmitted.

eCall is a standard feature in your Mercedes-Benz vehicle. In order to function as intended, the system relies on the transmission of data detailed in the Transmitted Data section that follows.

To disable eCall, a customer must visit an authorized Mercedes-Benz Service department to deactivate the vehicle’s communication module.

Deactivation of this module prevents the activation of any and all Mercedes me connect services. After the deactivation of eCall, automatic emergency call and manual emergency call will not be available.

The vehicle must be switched on before an automatic emergency call can be made.

ⓘ eCall is activated at the factory.

ⓘ eCall can be deactivated by an authorized Mercedes-Benz dealer. Please note that in the event ownership of the vehicle is transferred to another owner in its deactivated state, eCall will remain deactivated unless the new owner visits an authorized Mercedes-Benz dealership to reactivate the system.

Overview of the Mercedes-Benz emergency call system

eCall can help to reduce the time between an accident and the arrival of emergency services at the site of the accident. It helps locate an accident site in places that are difficult to access. However, even if a vehicle is equipped with eCall, this does not mean the system is ON. As such, eCall does not replace dialing 911 in the event of an accident.

An emergency call can be made automatically or manually.

Only make emergency calls if you or others are in need of rescue. Do not make an emergency call in the event of a breakdown or a similar situation.

Messages on the display
SOS NOT READY: the vehicle is not on or eCall not available.

During an active emergency call, <schar> appears in the display.

You can find more information on the regional availability of eCall at: https://www.mercedes-benz-mobile.com/extra/ecall/

ⓘ If there is a malfunction of the emergency call system, the loudspeakers, microphone, air bag or the SOS button, for example, are faulty.

You can recognize a malfunction in the emergency call system by the following displays:

- A corresponding message will also appear in the driver's display.
- The SOS button lights up red continuously.

Triggering an automatic Mercedes-Benz emergency call

Requirements:
- The vehicle is switched on.
- The starter battery is sufficiently charged.

The Mercedes-Benz emergency call system triggers an emergency call automatically in the following cases:

- After activation of the restraint systems such as air bags or Emergency Tensioning Devices after an accident
- After an automatically initiated emergency stop by Active Emergency Stop Assist

The emergency call has been made:

- A voice connection is made to the Mercedes-Benz emergency call center.
- A message with accident data is transmitted to the Mercedes-Benz emergency call center.

  The Mercedes-Benz emergency call center can transmit the vehicle position data to one of the emergency call centers.

The SOS button in the overhead control panel flashes until the emergency call is finished.

It is not possible to immediately end an automatic emergency call.

If no connection can be made to the emergency services either, a corresponding message appears in the media display.

▶ Dial the local emergency number on your mobile phone.

If an emergency call has been initiated:

- Remain in the vehicle if the road and traffic conditions permit you to do so until a voice connection is established with the emergency call center operator.
- Based on the call, the operator decides whether it is necessary to call rescue teams and/or the police to the accident site.
- If no vehicle occupant answers, an ambulance is sent to the vehicle immediately.

Triggering a manual Mercedes-Benz emergency call

- **To use the SOS button in the overhead control panel:** press the SOS button at least one second long (→ page 469).

or

- **To use voice control:** use the voice commands of the MBUX voice assistant (→ page 364).

The emergency call has been made:

- A voice connection is made to the Mercedes-Benz emergency call center.
- A message with accident data is transmitted to the Mercedes-Benz emergency call center.

  The Mercedes-Benz emergency call center can transmit the vehicle position data to one of the emergency call centers.
- Remain in the vehicle if the road and traffic conditions permit you to do so until a voice connection is established with the emergency call center operator.
- Based on the call, the operator decides whether it is necessary to call rescue teams and/or the police to the accident site.

If no connection can be made to the emergency services, a corresponding message appears in the central display.

- Dial the local emergency number on your mobile phone.

Ending an unintentionally triggered manual Mercedes-Benz emergency call

- Select <schar> on the multifunction steering wheel. Depress button for several seconds.

Data transfer of the Mercedes-Benz emergency call system

In the event of an automatic or manual emergency call the following data is transmitted, for example:

- Vehicle's GPS position data
- GPS position data on the route (a few hundred meters () before the incident)
- Direction of travel
- Vehicle identification number
- Vehicle drive type
- Number of people detected in the vehicle
- Whether Mercedes me connect is available or not
- Whether the emergency call was initiated manually or automatically
- Time of the accident
- Language setting on the multimedia system

Data transmitted is vehicle information. For any questions about the collection, use and sharing of the eCall system data, please contact MBUSA's Customer Assistance Center at 800-FOR-MERC.

For Canada, please contact MBC's Customer Assistance Center at 1-800-387-0100.

Customer requests for covered information should be submitted via the same channels.

For accident clarification purposes, the following measures can be taken up to an hour after the emergency call has been initiated:

- The current vehicle position can be determined.
- A voice connection to the vehicle occupants can be established.

In-Car Apps

In-Car Apps overview

You can install additional apps via the In-Car Mercedes me Store and use them in your vehicle. The available In-Car Apps cover various topics such as entertainment, news or games.

In order to install In-Car Apps you require a Mercedes me user account and the In-Car App Pass service must be activated. If you do not yet have a Mercedes me ID you have to create this and connect it with your vehicle. Make sure that the In-Car App Pass service has been activated in the Mercedes me services management for your vehicle.

If the In-Car App Pass service is not available for your vehicle or has expired, you can order or extend this via the Entertainment Package in the Mercedes me Store. The In-Car App Pass is automatically activated when the Entertainment Package is ordered. With the In-Car App Pass you obtain access to our ever-growing library of apps and experience additional apps in your Mercedes.

ⓘ It is only possible to install In-Car Apps with an Internet connection.

ⓘ The availability of In-Car Apps is country-dependent.

Installing In-Car Apps via the In-Car Mercedes me Store

Requirements:

- You have a Mercedes me user account.
- The vehicle is linked to a Mercedes me user account.
- You have agreed to the terms of use.
- The In-Car App Pass service is activated in the vehicle.

Multimedia system:

↳ ⌂ ⏩ Store

▶ Select Apps.
The available apps are displayed.

▶ Select the desired app.

▶ Install the app.
The installed apps can be found on the home screen.

ⓘ It is only possible to install In-Car Apps with an Internet connection.

ⓘ The availability of In-Car Apps is country-dependent.

Online and Internet functions

Internet connection

Purchasing a data package

Obtain your data package with the Mercedes me App in just a few steps.

Depending on the country, software version, your vehicle line and ordered equipment, you can search in the Mercedes me App for "In-Car WiFi" for a separate fee-based data package from a third-party provider.

To do that, please open your Mercedes me App and proceed as follows:

▶ Open the menu.

▶ Select the vehicle.

▶ Tap on "Manage services".

▶ Tap on "Infotainment".

▶ Tap on "In-Car WiFi".
You will be forwarded to the third-party provider.

Alternatively, connect your smartphone via Bluetooth® tethering* or WLAN tethering* to use your mobile data volume. To do that open the system settings in your vehicle.

*Depending on the vehicle line, software version and country, tethering may not be available to you.

Information on connecting to the Internet

⚠ **WARNING** Risk of distraction from information systems and communications equipment

If you operate information systems and communication devices integrated in the vehicle when driving, you could be distracted from the traffic situation. This could also cause you to lose control of the vehicle.

▶ Only operate this equipment when the traffic situation permits.

▶ If you cannot be sure of this, stop the vehicle whilst paying attention to road and traffic conditions and operate the equipment with the vehicle stationary.

You must observe the legal requirements for the country in which you are currently driving when operating the multimedia system.

⚠ **WARNING** Risk of accident from operating mobile communication equipment while the vehicle is in motion

Mobile communication devices distract the driver from the traffic situation. This can also cause the driver to lose control of the vehicle.

▶ As a driver, only operate mobile communication devices when the vehicle is stationary.

▶ As a vehicle occupant, use mobile communication devices only in the designated area, e.g. in the rear passenger compartment.

You must observe the legal requirements for the country in which you are currently driving when operating mobile communication equipment in the vehicle.

Depending on the vehicle's equipment and availability in the country, you can establish an Internet connection in the following ways:

- **Vehicles with a communication module:**
  - Using the communication module including data roaming (→ page 481)
  - Using Wi-Fi with a data-enabled mobile phone
- **Vehicles without a communication module:**
  - Using Wi-Fi with a data-enabled mobile phone

The Internet functions can only be used to a limited degree whilst driving.

Setting up an Internet connection using the communication module

Requirements:

- The vehicle is equipped with a permanently installed communication module.

- A Mercedes me user account is available.
- The vehicle is linked to a Mercedes me user account.
- The "In-Car WiFi" service is activated.

Multimedia system:

Settings ▸▸ System ▸▸ Internet and Bluetooth ▸▸ Manage Internet Access

▶ Select Search for Internet Access in the Internet device manager.

▶ Select Purchased Data Plan.

For most Mercedes me connect services, data volume is available when purchasing the services.

Additional data volume is required to use some functions, e.g. web browser or Wi-Fi hotspot.

If the data volume limit is reached, the availability of Mercedes me connect services is limited.

Depending on the vehicle equipment, you can purchase a data package directly from a mobile phone network provider via the Mercedes me Store. To be able to use the data package, you conclude a separate contract with a mobile phone network provider via the Mercedes me Store, which can be terminated at any time and for which there are no costs. This contract is a prerequisite for using the services from the previously purchased package. The availability of this option is dependent on the country.

If the data package option is not available or can be upgraded, you can purchase data volume directly from the mobile phone network provider for a fee.

ⓘ Visit an authorized Mercedes-Benz Center to find out whether it is possible to purchase data volume in your country **directly from a mobile phone network provider**.

ⓘ Alternatively, and if available, you can utilize the tethering function of a mobile phone via Wi-Fi to use the web browser or Wi-Fi hotspot.

ⓘ With external Wi-Fi hotspots, which are encrypted via TKIP, online software updates cannot be carried out via the external Wi-Fi hotspot.

Disconnecting the automatic Internet connection via communication module

Requirements

- Wi-Fi tethering is available in the vehicle.

Multimedia system:

Settings ▸▸ System ▸▸ Internet and Bluetooth ▸▸ Manage Internet Access

▶ Select the ••• settings in the line of Purchased Data Plan.

▶ **To disconnect the automatic connection:** select the Delete Entry option.

ⓘ The communication module is removed from the list of known hotspots, but can be reconnected manually at any time (→ page 481).

The Delete Entry option permits the use of purchased data volume to be limited. The system is prevented from automatically establishing a connection to the communication module after this option has been activated.

Setting up an Internet connection via Wi-Fi

Requirements

- The Wi-Fi function is activated on the multimedia system (→ page 398).
- The Wi-Fi hotspot function is activated on the mobile phone (see the manufacturer's operating instructions).
- Internet access via Wi-Fi is activated (see the manufacturer's operating instructions).

Multimedia system:

⌂ ▸▸ Settings ▸▸ System ▸▸ Internet and Bluetooth ▸▸ Manage Internet Access

ⓘ This function is country-dependent.

The mobile phone is listed in the Internet device manager

▶ Select the mobile phone with the Wi-Fi symbol.

The mobile phone is not listed in the Internet device manager

▶ Select Search for Access.

▶ Select the mobile phone with the Wi-Fi symbol.
It may take a few seconds until the device is found by the Wi-Fi search.

▶ Log in to the Wi-Fi network (→ page 398).

The Internet connection via Wi-Fi is restricted or does not function in the following cases:

- The mobile phone is switched off
- Mobile data use is deactivated on the mobile phone
- The Wi-Fi function is deactivated on the multimedia system
- The Wi-Fi function is deactivated on the mobile phone
- Internet access via Wi-Fi is deactivated on the mobile phone

Canceling Internet access permission for a mobile phone

Multimedia system:

⌂ ▸▸ Settings ▸▸ System ▸▸ Internet and Bluetooth ▸▸ Manage Internet Access

▶ Select options ••• next to the name of the mobile phone.

▶ Select Delete Configuration.

▶ Select Yes.

Connection status

Connection status overview

Depending on the connection status, the following symbols can appear on the central display in the status line:

- : a Wi-Fi device is selected as Internet access.
- Mobile phone standard (e.g. 4G + double arrow symbol): the communication module is selected as the hotspot.

Displaying the connection status

Multimedia system:

→ ⌂

▶ Briefly press the status line.
The extended status line is displayed.

▶ Briefly press the Internet symbol in the symbol overview.
The current connection status is displayed.

Notes on displaying the connection status

- When connecting via Wi-Fi, the connection status and device name are displayed.
- In the case of a connection via the communication module the following status information can be shown:
  - Type of network
  - Status (online, offline, data volumes available or used, limited service)
- For vehicles with a communication module, the connection data of non-user paid services can be displayed via Mercedes me connect.

Audials Radio

Calling up Audials Radio

Requirements

- There is a user account at https://www.mercedes.me.
- The vehicle is linked to the Mercedes me user account.
- The Internet Radio service is activated.
- The data volume is available.
  Depending on the country, data volume may need to be purchased.
- A fast Internet connection for data transmission free of interference.

ⓘ The functions and services are country-dependent. For more information, consult an authorized Mercedes-Benz Center.

Multimedia system:

→ ⌂ ▸▸ Radio

▶ Select Audials Radio.
The Audials Radio menu appears. The last station set starts playing.

ⓘ The connection quality depends on the local mobile phone reception.

Selecting and connecting Audials Radio stations

Multimedia system:

→ ⌂ ▸▸ Radio ▸▸ Audials Radio

▶ Select ☰.

▶ Select a category.

▶ Select a station.
The connection is established automatically.

or

▶ Select the search field.

▶ Enter a station name.

ⓘ A relatively large volume of data can be transmitted when using Internet Radio.

Saving/deleting an Audials Radio station as a favorite

Multimedia system:

→ ⌂ ▸▸ Radio ▸▸ Audials Radio

Saving favorites

▶ Select a station.

▶ Press ☆.

Deleting favorites

▶ Select a station.

▶ Press ★.

Setting Internet Radio options

Multimedia system:

↪ ⌂ ▸▸ Radio ▸▸ Audials Radio ▸▸ ⚙ ▸▸ Audials Radio

The following options are available:

- Log in to Audials Account: log in to your Audials user account
- Log out of Account: log out of your Audials user account

▶ Select an option.

Media

Information about media mode

Information about supported formats and data storage media

⚠ WARNING Risk of distraction when handling data storage media

If you handle a data storage medium while driving, your attention is diverted from the traffic conditions. This could also cause you to lose control of the vehicle.

▶ Only handle a data storage medium when the vehicle is stationary.

Supported formats and data storage media:

Permissible file systems	FAT32, exFAT, NTFS
Permissible data storage media	USB mass storage device, iPod®/iPhone®, MTP devices, Bluetooth® audio devices
Supported audio formats	MP3, WMA, AAC, WAV, FLAC, ALAC
Supported video formats	MPEG, AVI, MKV, MP4, M4V, WMV

ⓘ Observe the following notes:

- The multimedia system supports a total of up to 50,000 files.
- Data storage media up to 2 TB are supported (32-bit address space).
- Due to the large variety of available music and video files regarding encoders, sampling frequency and data transfer rates, playback cannot be guaranteed.
- Due to the wide range of USB mass storage devices available on the market, playback cannot be guaranteed for all USB mass storage devices.
- Videos up to FullHD (1920x1080) are supported.
- Copy-protected music and video files or DRM (Digital Rights Management) encrypted files cannot be played back.

- MP3 players must support Media Transfer Protocol (MTP).

Information on copyright protection and trademarks

Audio files which you create yourself (e.g. copies of data storage media you make yourself) are generally subject to copyright protection. In many countries, reproductions are not permitted without the prior consent of the copyright holder, even for private use. Make sure that you know about the applicable copyright regulations and that you comply with these.



Manufactured under license from Dolby Laboratories. Dolby, Dolby Audio and the double-D symbol are trademarks of Dolby Laboratories.



For DTS Patents, see https://patents.dts.com. Manufactured under license from DTS Licensing Limited. DTS, the Symbol, & DTS and the Symbol together are registered trademarks, and DTS Tru-Volume is a trademark of DTS, Inc.©. DTS, Inc. All Rights Reserved.

DTS® Connected Radio™

For DTS Patents, see http://patents.dts.com. Manufactured under license from DTS Licensing Limited. DTS, DTS Connected Radio, and the DTS logo are registered trademarks or trademarks of DTS, Inc. in the United States and other countries. © 2020 DTS, Inc. ALL RIGHTS RESERVED. Lyrics licensed and provided by Lyric Find™. Content licensed and sourced from Radioplayer™.

Gracenote, the Gracenote logo and logotype, "Powered by Gracenote", MusicID and Playlist Plus are either registered trademarks or trademarks of Gracenote, Inc. in the United States and/or other countries.

F214 0032 13

TIDAL and TIDAL logo are registered trademark of Aspiro AB in the European Union and other countries.

Overview of the media menu

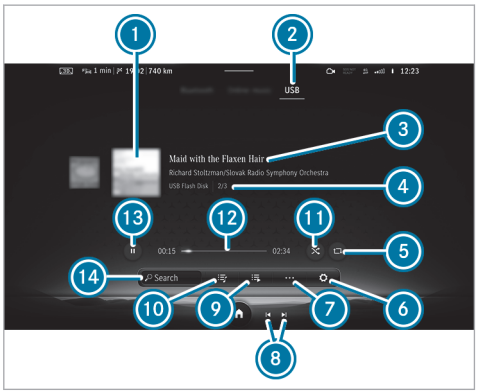

1. Album cover
2. Active media source
3. Track and artist

④ Active data storage medium and current track number/track in playback list
⑤ Settings
⑥ Options
⑦ Previous or next track and fast rewind or fast forward
⑧ Selected device
⑨ Playlists and categories
⑩ Media search
⑪ Controls playback
⑫ Timeline
⑬ Controls playback
⑭ Media search

When the control menu is called up on the zero layer, the following functions are available:

- Controlling media playback
- Selecting tracks from the current playlist
- Selecting a playback list
- Media search
- Selecting a media source
- Creating favorites
- Configuring settings

ⓘ Further information on:
- Overview of the zero layer (→ page 371).
- Operating the zero layer (→ page 373).

Connecting the data storage medium to the multimedia system

Connecting a USB mass storage device

! NOTE Damage due to high temperatures

High temperatures can damage USB mass storage devices.

▶ After use, remove USB mass storage devices from the vehicle.

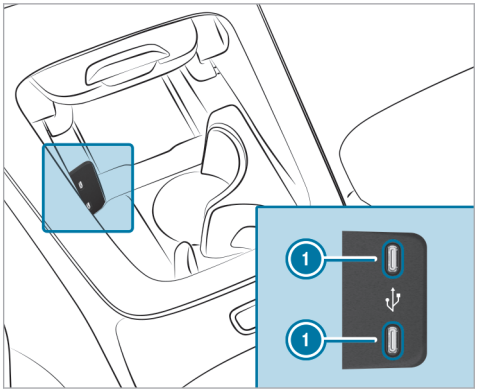

The multimedia connection unit is found in the center console storage compartment and has two type C USB ports ①. Depending on the vehicle equipment, there are further USB ports in the stowage compartment under the armrest.

▶ Connect the USB mass storage device with the USB port.

Searching for and authorizing a Bluetooth® audio device

Requirements

- Bluetooth® is activated on the multimedia system and audio equipment.
- The audio equipment supports the Bluetooth® audio profiles A2DP and AVRCP.
- The audio equipment is "visible" for other devices.

Multimedia system:

→ ⌂ ›› Media ›› Bluetooth

Authorizing a new Bluetooth® audio device

- Select Connect device.
  Detected equipment is displayed in the device list.
- Select an audio device.
  Authorization starts. A code is displayed on the multimedia system and on the mobile phone.
- If the codes are identical, confirm on the audio equipment.
- Select No, Only for Music.
  The Bluetooth® audio equipment is connected with the multimedia system.

Connecting previously authorized Bluetooth® audio equipment

- Select a Bluetooth® audio device from the list.
  The connection is being established.

Starting media playback

Requirements:

- A data storage medium is connected to the multimedia system.

Multimedia system:

→ ⌂ ›› Media

- Select a media source.

Controlling media playback

Multimedia system:

→ ⌂ ›› Media

- **To pause playback:** select ⏸.
- **To continue playback:** select ⏵.
- **To repeat a track:** select 🔁.
  For the repeat function there are the following settings:
  - **Select once:** the active playlist is repeated.
  - **Select twice:** the current track is repeated.
  - **Select three times:** the repeat function is deactivated.
- **To play back tracks in random order:** select 🔀.
- **To rewind or fast-forward a track:** tap on the desired point on the timeline.
- **To select the next track:** select ⏭.
- **To select the previous track:** select ⏮.
- **To scroll through tracks quickly:** press and hold ⏮ or ⏭.
- **To show the current track list:** select ☰.

ⓘ You can also control media playback on the zero layer using the control menu displayed (→ page 371).

Additional options for setting media playback

Multimedia system:

→ ⌂ ▸▸ Media

Calling up additional options

- ▶ Select [•••].
  The additional options are shown.
- ▶ Select an option.

Media search

Notes about the search function in categories

Under [♫] you can search through all available media files. There are several categories available for selection. The categories shown depend on the connected device and data format.

ⓘ The categories are available as soon as the entire media content has been read in and analyzed.
Availability of the media search with Android devices may be limited.

Starting a search in categories

Multimedia system:

→ ⌂ ▸▸ Media ▸▸ ♫

- ▶ Select a category.

Using the keyword search

Multimedia system:

→ ⌂ ▸▸ Media

You can look for content using the keyword search with free text input.

- ▶ Select [🔍].
  A keyboard for character entry appears.
- ▶ Enter the term searched for.

ⓘ The search begins with the first character entered. The more characters entered the more concrete the search results become.

- ▶ Select the desired entry from the result list.
  If a list with several tracks is selected, then this is opened in the search.

  To playback all of the tracks in the list, select [•••] and then Play Now.

Media operation on the front passenger display (only vehicles with MBUX Hyperscreen)

Information about media mode

You can also use functions of the MBUX multimedia system on the front passenger display.

You can find more information on the following topics:

- Information about supported formats and data storage media (→ page 485)
- Information on copyright protection and trademarks (→ page 486)
- Overview of the media menu (→ page 487)

⚠ **WARNING** Risk of injury from unsecured items in the vehicle

If objects such as headphones/headsets or external audio/video sources are not secured in the vehicle interior, they can be flung around and hit vehicle occupants.

- ▶ Always stow these items or similar objects carefully so that they cannot be flung around, for example in a lockable vehicle stowage compartment.

Observe the notes on loading the vehicle.

WARNING Health hazard due to excessive volume on headphones

Excessive volume can damage your hearing.

- Avoid wearing headphones for long periods of time and at too high a volume (85 decibels).
- Ensure that the volume is set to a comfortable level.

ⓘ The headphones are special equipment for the MBUX multimedia system.
You can also obtain the headphones from Mercedes-Benz Customer Solutions or in a specialist shop (see the manufacturer's operating instructions).

ⓘ The function of wireless headphones can be impaired by other radio-based electronic devices, such as mobile phones, for example.

Starting and operating media playback

Requirements

- A data storage medium is connected to the multimedia system.

Multimedia system:

→ ⌂ ▸▸ Media

- Select a media source.
- **To adjust the volume:** select - + in the menu line and press − or +.
- **To set playback via vehicle loudspeakers:** press in the menu line.

The following functions are available:

- Controlling media playback (→ page 489)
- Options for setting media playback (→ page 490)
- Starting a search in categories (→ page 490)
- Using the keyword search (→ page 490)

Music online

Adding an online music provider

Requirements:

- There is an account for the music streaming service.
- A subscription for the music streaming service has been obtained.
- A Wi-Fi hotspot with unrestricted or sufficient data volume is available.

  Depending on the country, data volume may need to be purchased.
- A fast Internet connection for data transmission free of interference.

ⓘ The functions and services are country-dependent. For more information, consult an authorized Mercedes-Benz Center.

Multimedia system:

→ ⌂ ▸▸ Media

Adding a streaming provider the first time you start the application

- Select Online Music.
  The overview of all supported streaming providers appears.
- Select a streaming provider.
  A QR code is shown on the display.
- Scan the QR code with the mobile phone.
- Confirm the connection request on the mobile phone.

Adding more streaming providers

- Select Online Music.
  The last active streaming provider is active.
- Select ⚙.
- Select Music Services.
  The overview of all supported streaming providers appears.
- Select a streaming provider.
  A QR code is shown on the display.
- Scan the QR code with the mobile phone.
- Confirm the connection request on the mobile phone.

Logging out from a streaming provider

- Select Online Music.
  The last active streaming provider is active.
- Select ⚙.
- Select Music Services.
  The overview of all supported streaming providers appears.
- ⚙ next to the streaming provider.
- Tap on Log Out.

Calling up music online

Multimedia system:

→ ⌂ ▸▸ Media

- Select Online Music.

Music playback can be controlled with the Touch Control or by using the media application.

Searching for music in online music

Multimedia system:

→ ⌂ ▸▸ Media ▸▸ Online Music

Searching for categories in online music

The media content of the streaming provider can be scanned through in the category search. The available categories and the symbol for the category search depend on the streaming provider.

- Start the category search.
  The list of available categories appears.
- Select a category.

Keyword search in online music

You can look for content using the keyword search with free text input.

- Select 🔍.
  A keyboard for character entry appears.
- Enter the term searched for.

ⓘ The more characters entered when using the keyword search, the more concrete the search results are.

- Select the desired entry from the result list. Depending on the selected hit, playback is started or a lower level in the search is opened.

Calling up online music settings

Multimedia system:

→ Home ▸▸ Media ▸▸ Online Music

- Select ⚙.
- Select Music Services.
- Select ⚙ next to a streaming provider.
- Select a setting.

ⓘ Information about the linked accounts can be displayed using the ⚙ gearwheel symbol next to the configured streaming provider. The available information depends on what is offered by the provider of the streaming service.

Radio

Switching on the radio

Multimedia system:

→ Home ▸▸ Radio

- Start the application on the multimedia system home screen.
  The radio menu appears. You will hear the last station played on the last frequency band selected.

Radio overview



1. Station logo
2. Active frequency band
3. Station name or set frequency
4. Settings
5. Sound settings
6. Switching HD Radio™ on/off

⑦ Station list
⑧ Search

ⓘ The availability of the frequency bands is dependent on the equipment.

When the control menu is called up on the zero layer, the following functions are available:

- Selecting a radio station
- Setting radio stations from the station list
- Storing radio stations
- Frequency band
- Search function
- Creating favorites
- Configuring settings

ⓘ Further information on:

- Overview of the zero layer (→ page 371).
- Operating the zero layer (→ page 373).

You can watch an animation on this topic via the following link:

Setting the frequency band

Multimedia system:

→ Home ▸▸ Radio

The following frequency bands are available:

- AM
- FM
- SiriusXM

▶ Select a frequency band or a favorite.

Selecting a radio station

Multimedia system:

→ Home ▸▸ Radio

▶ Swipe to the left or right on the control element or select a radio station.

Calling up the radio station list

Multimedia system:

→ Home ▸▸ Radio

▶ Select [≡↑].
The station list appears.
▶ Swipe the station list up or down.
▶ Select a station.

Searching for radio stations using station names or frequency entry

Multimedia system:

→ Home ▸▸ Radio

▶ Select [🔍].
▶ Enter a station name or frequency.
▶ Select a station.

Selecting a recommended radio station

Requirements

- The multimedia system has gathered sufficient data in order to show station suggestions.

Multimedia system:
Radio

- Select [search].
  The recommended stations are shown.
- Select a suggested station.
  The selected station is played.

Storing radio stations

Multimedia system:
Radio

- Select a radio station.
- Select [star].

Managing favorites

Multimedia system:
Radio ▸▸ Favorites

Moving stations

- Press [list star].
  The list of favorites appears.
- Press [•••] to the far right of the station name.
- Select Move.
- Move the station to the new position.

Displaying radio text

Multimedia system:
Radio ▸▸ [gear] ▸▸ Active frequency band

- Activate or deactivate Radio Text Information.

Showing or hiding lyrics

ⓘ The function is equipment-dependent.

Multimedia system:
Radio ▸▸ [•••]

Showing lyrics

- Select Show lyrics.
  The lyrics, album cover, title and artist of the song currently playing on the radio are displayed.
  Swipe up or down to go to the bottom or top section of the lyrics.
  If no lyrics are available for the song currently playing on the radio, Show lyrics is grayed out.

Hiding lyrics

- Select the cross at the top of the lyrics display.

or

- Select [back].
  The radio menu appears.

Satellite radio

Information on the satellite radio

SIRIUS XM® satellite radio offers more than 175 digital-quality radio channels providing 100% commercial-free music, sports, news and entertainment, for example. SIRIUS XM satellite radio employs a fleet of high-performance satellites to broadcast around the clock throughout the USA and Canada. The satellite radio program is available for a monthly fee. Information about this can be obtained from a Sirius XM® Service Center

and at https://www.siriusxm.com (USA) or https://www.siriusxm.ca (Canada).

ⓘ Sirius, XM and all related marks and logos are trademarks of Sirius XM Radio Inc. and its subsidiaries. All other marks, channel names and logos are the property of their respective owners. All rights reserved.

Satellite radio restrictions

Satellite radio mode may be temporarily unavailable or interrupted for a variety of reasons. These include environmental or topographical conditions beyond the control of Mercedes-Benz USA, LLC. Thus, operation at certain locations may not be possible.

Switching on satellite radio

Multimedia system:

→ Home ▸▸ Radio

▶ Select SiriusXM.

Overview of the satellite radio

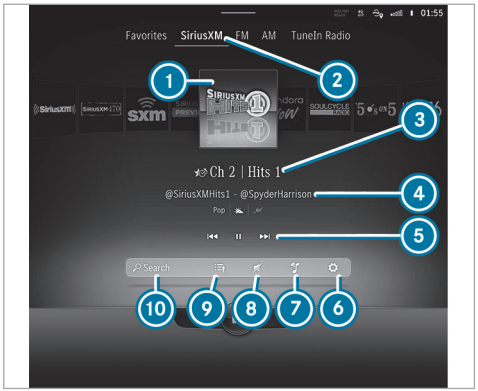

1. Logo or album art (if available)
2. Active frequency band
3. Channel name
4. Additional information provided by the station
5. Controls playback
6. Settings
7. Sound settings
8. Mutes volume
9. Station list
10. Search

Selecting a satellite radio category

Multimedia system:

→ Home ▸▸ Radio ▸▸ SiriusXM

▶ Select ☰.

▶ Select Category.

▶ Select a category.

Selecting a satellite radio channel

Multimedia system:

→ Home ▸▸ Radio ▸▸ SiriusXM

▶ Select ☰.

▶ Select a channel.

Saving or deleting a satellite radio channel

Multimedia system:

→ Home ▸▸ Radio ▸▸ SiriusXM

Storing the current channel

▶ Select ☆.

F214 0032 13

Moving a channel

- Press [☰★].
  The list of favorites appears.
- Press [⋮] next to the channel name.
- Move the station to the new position.

Deleting the current channel

- Press [★].

Setting parental control for radio

Multimedia system:

↪ [⌂] ▸▸ [♪] Radio ▸▸ SiriusXM ▸▸ [⚙]

- Select Parental Control.
- Determine a four-digit character sequence and confirm with [ok].
  All channels with adult content are locked.

Unlocking a channel

- Enter the four-digit character sequence and confirm with [ok].
  All channels with adult content are unlocked.

Music and sport alerts function

This function enables you to program an alert for your favorite artists, tracks or sporting events. Music alerts can be saved whilst a track is being played and sport alerts can be saved during a live game. You can also specify sport alerts via the menu option. The system then continuously searches through all the channels. If a match is found with a stored alert, you will be informed.

Setting music and sport alerts

Multimedia system:

↪ [⌂] ▸▸ [♪] Radio ▸▸ SiriusXM ▸▸ [⚙] ▸▸ Alerts

Activating messages for a category

- Select a category and activate [⬬].

Adding messages for a category

- Select a category and add a message [+].
- Select Artist Alerts or Track Alerts in the dialog window.
  The message is set for the activated ☑ track and artist. If a match is found, a prompt appears asking whether you wish to change to the station.

Deleting messages in a category

- Select the desired category.
- Mark the desired messages and delete with [🗑].

or

- Do not mark any messages and delete all entries [🗑].

Information about Smart Favorites and TuneStart

From the station presets you can set up to eight stations as Smart Favorites. Smart Favorites stations are automatically saved to temporary storage in the background. If you change to a Smart Favorites station, you can replay, pause or actively skip forward or back to broadcasts which you have missed. If Tune Start is activated and you change to another Smart Favorites station, the music track currently playing on the station is automatically restarted from the beginning of the track.

Adding a channel to Smart Favorites

Multimedia system:

→ ⌂ ▸▸ Radio ▸▸ SiriusXM

- Press and hold on the station logo until the options appear.
- **To add a channel:** select Add to Smart Favorites in the menu.
- **To remove a channel:** select Delete from Smart Favorites in the menu.

Creating a TuneMix™ list

Multimedia system:

→ ⌂ ▸▸ Radio ▸▸ SiriusXM ▸▸ ⚙ ▸▸ TuneMix Lists

In order to listen to seamless music, you can put together a TuneMix™ list from various stations.

- Select Create TuneMix List.
- If necessary, limit the number of stations shown using the Category entry.
- Select the station shown ☑.
- Press ⟨ to confirm.
  A TuneMix™ station logo is created in the radio menu.

Activating/deactivating TuneStart

Multimedia system:

→ ⌂ ▸▸ Radio ▸▸ SiriusXM ▸▸ ⚙

- Select General.
- Activate or deactivate TuneStart.

Displaying satellite radio service information

Multimedia system:

→ ⌂ ▸▸ Radio ▸▸ SiriusXM ▸▸ ⚙

- Select General.
- Select Service Information.

Sound

Sound settings

Information about the sound system

The sound system has a total output of 125 W and is equipped with seven speakers. It is available for all functions in the radio and media modes.

ⓘ The call can also be made from other audio sources. Replace Media with, for example, Radio in the menu path.

Calling up the sound menu

Multimedia system:

→ ⌂ ▸▸ Media ▸▸ ⚙

- Select one of the functions shown to make settings.

Adjusting treble, mid-range and bass settings

Multimedia system:

→ ⌂ ▸▸ Media ▸▸ ⚙

- Set Treble, Mid or Bass.

Setting the balance and fader

Multimedia system:

→ ⌂ ⏩ Media ⏩ ⚙ ⏩ Balance and Fader

Adjusting the balance

- In the grid shown, move the volume distribution between the right and left speakers in the vehicle.
  The volume is distributed between the right and left-hand speakers.

Adjusting the fader

- In the grid shown, move the volume distribution between the front and rear speakers in the vehicle.
  The volume is distributed between the front and rear speakers.

Burmester® 4D surround sound system

Information on the Burmester® 4D surround sound system

The Burmester® 4D surround sound system has a total output of 730 W and is equipped with 17 speakers including two speakers close to the driver's ear to support navigation announcements and telephony. Furthermore the sound system is equipped with two tactile transducers each for the driver and front passenger seats. It is available for all functions in the radio and media modes.

ⓘ The navigation announcements from the speakers close to the driver's ears can be set in the system settings (→ page 434). Telephony with the speakers close to the driver's ears can be set in the telephone menu (→ page 458).

ⓘ The call can also be made from other audio sources. Replace Media with, for example, Radio in the menu path.

Calling up the sound menu on the Burmester® 4D surround sound system

Multimedia system:

→ ⌂ ⏩ Media ⏩ ⚙

Adjusting sound settings

- Select one of the functions shown to make settings.

Setting 4D sound

- Select 4D Sound Adjustment.
- Select a seat.
- Use the controller to set the intensity of the bass vibrations.

Adjusting the treble, mid and bass settings on the Burmester® 4D surround sound system

Multimedia system:

→ ⌂ ⏩ Media ⏩ ⚙ ⏩ Equalizer

- Set Treble, Mid or Bass.

Adjusting the balance and fader on the Burmester® 4D surround sound system

Multimedia system:

→ ⌂ ⏩ Media ⏩ ⚙ ⏩ Balance and Fader

Adjusting the balance

- Move the volume distribution between the right and left sides of the vehicle in the grid shown.
  The volume is distributed between the speakers on the left and right sides in the vehicle.

Adjusting the fader

- Move the volume distribution between the front and rear of the vehicle in the grid shown.
  The volume is distributed between the speakers in the front and rear of the vehicle.

ⓘ Setting 0 is recommended for high quality music and voice reproduction.

Selecting a sound profile in the Burmester® 4D surround sound system

Multimedia system:

→ ⌂ ▸▸ Media ▸▸ ⚙

Setting an existing sound profile

- Select a sound profile.

Setting up a personal sound profile

- Select Personal Sound Profile and select ⚙.
- Select Reconfigure.
  The setup assistant will be restarted.

Setting up a personal sound profile for the first time:

- Select Personal Sound Profile.
- Open the set-up assistant with Start.
- Observe the messages on the display and select the preferred settings.
  The personal sound profile is created with the selected settings and can be selected in the Sound Profiles menu.

Changing individual settings of the personal sound profile at a later date:

- Select Personal Sound Profile and ⚙.
- Adjust the desired settings.

ⓘ The availability of a Personal Sound Profile is dependent on the equipment.
The set-up assistant is available when the vehicle is stationary.

Adjusting the sound focus in the Burmester® 4D surround sound system

Multimedia system:

→ ⌂ ▸▸ Media ▸▸ ⚙ ▸▸ Sound Focus

- Select a seat or row of seats for the sound focus.
  The sound focus is activated.

or

- Select the seat or row of seats again.
  The sound focus is deactivated.

Super Sport Sound

Information on Super Sport Sound

With the Super Sport Sound function, engine sounds can be experienced even more intensely inside your vehicle. To do this, your vehicle generates sporty engine sounds to match the current driving situation and plays them through the speakers of your sound system inside the vehicle.

ⓘ The Super Sport Sound function is an on-demand feature (→ page 81).

Calling up Super Sport sound

Multimedia system:

→ ⌂ ▸▸ Settings ▸▸ Vehicle ▸▸ Driving ▸▸ Super Sport sound

Switching Super Sport sound on or off

- Tap on ⬭ to switch on the Super Sport sound.

or

▶ Tap on  to switch off the Super Sport sound.

ⓘ The availability of Super Sport sound is country-dependent.

Camera app

Overview of the camera app

The laws concerning video and audio recordings of vehicle surroundings and vehicle occupants may differ depending on the country. Please observe the laws of the country in which you are recording.

With the camera app, you can take photos, multiple shots and videos, both from Interior as well as from Outside. You can switch between the two cameras in the overview. It is operated using the touchscreen or Touch Control.

You can view your captured photos and videos in the Gallery app.

Additional information about the Gallery app (→ page 475)

ⓘ The function is country-dependent.

ⓘ No photos or videos can be taken while the vehicle is in motion.

ⓘ If the USB flash drive is not recognized by the vehicle, you can try to fix the error by connecting the USB flash drive to a computer.

ⓘ To ensure secure operation, only use FAT32 or exFAT formatted USB storage devices.

ⓘ Do not remove the USB flash drive during recording. This can damage the files.
You can eject the USB flash drive in the settings (→ page 502).

Display messages

In the following situations display messages may be shown:

- The memory is full or there are only a few minutes recording time available. The video recording stops or will be stopped imminently.

  Change the USB device or delete a photo or video file.
- The camera is not functioning. A message appears.

  Have the camera checked in an authorized Mercedes-Benz Center.
- No USB device is connected to save the recordings.

  The Please insert a storage medium into the USB port to start recording. message appears.
- If a dashcam recording is started during a video recording with the Camera app, the video recording pauses.

  The Recording will be interrupted by dashcam recording. message appears.
- The camera is being used from another seat.

Taking photos and videos with the Camera app

Requirements

- For recording and saving a photo or video file: a USB device is connected with the multimedia system (→ page 488)
- The vehicle is switched on.

Multimedia system:

↳ [⌂] » Apps » Camera

The following recording modes are available:

- Video
- Photos
- Multiple shots

▶ Capture a video, photo, or multiple shots by selecting the appropriate icon.

ⓘ Every time the Camera app is launched, a liability notice appears. If the application should be started, select OK.

ⓘ You can view your captured photos and videos in the Gallery app. To do this, select the Gallery app icon in the overview.

Configuring Camera app settings

Multimedia system:

↳ [⌂] » Apps » Camera » [⚙]

The following functions are available:

- Snapshot Timer
- Image Series
- Series Image Intervals

▶ Select an option.

▶ Change the settings.

Ejecting the USB flash drive

▶ Select Storage Medium.

▶ Select [⏏] after the device name.
The Storage Medium Can Be Disconnected message appears.

ASSYST PLUS service interval display

Function of the ASSYST PLUS service interval display

The ASSYST PLUS service interval display on the driver's display provides information on the remaining time or distance before the next service due date.

You can hide this service display using the back button on the steering wheel.

Depending on how the vehicle is used, the ASSYST PLUS service interval display may shorten the service interval, e.g. in the following cases:

- Mainly short-distance driving
- When the engine is often left idling for long periods
- In the event of frequent cold start phases

Mercedes-Benz recommends avoiding such operating conditions.

You can obtain information concerning the servicing of your vehicle from a qualified specialist workshop, e.g. an authorized Mercedes-Benz Center.

Displaying the service due date

Driver's display:

↳ Service

The next service due date is displayed.

▶ **To exit the display:** press the back button on the steering wheel.

Information on regular maintenance work

! **NOTE** Premature wear through failure to observe service due dates

Maintenance work which is not carried out at the right time or incompletely can lead to increased wear and damage to the vehicle.

▶ Adhere to the prescribed service intervals.

▶ Always have the prescribed maintenance work carried out at a qualified specialist workshop.

Notes on special service requirements

The prescribed service interval is based on normal operation of the vehicle. Have the maintenance work carried out more often than prescribed if operating conditions are difficult or the vehicle is subject to increased stress.

The ASSYST PLUS service interval display is only an aid. It is the responsibility of the driver of the vehicle to have maintenance work carried out more often than prescribed due to actual operating conditions and/or stresses.

Examples of arduous operating conditions:

- Regular city driving with frequent intermediate stops
- Mainly short-distance driving
- Frequent operation in mountainous terrain or on poor road surfaces
- When the engine is often left idling for long periods
- Operation in particularly dusty conditions and/or if air-recirculation mode is frequently used

In these or similar operating conditions, have the interior air filter, air filter, engine oil and oil filter, for example, changed more frequently. If subject to increased stress, check the tires more. Further information can be obtained at a qualified specialist workshop.

Battery disconnection periods

The ASSYST PLUS service interval display can calculate the service due date only when the battery is connected.

- Display and note down the service due date on the driver's display before disconnecting the battery (→ page 503).

Maintenance Management

Notes about Maintenance Management

If the Maintenance Management service is activated, relevant data is automatically transferred to the Mercedes-Benz customer center.

The customer center transmits the data to the service partner that you have entered on the Mercedes me website at: http://www.mercedes.me. You will then receive individual recommendations regarding the maintenance of your vehicle.

ⓘ The calculation of the optimal transmission time of the maintenance request to the service partner is subject to technical limitations that may cause the maintenance recommendation to be perceived as too early or too late or not to be made at all. In this case, you can conveniently arrange a maintenance appointment with the customer center via the maintenance reminder in the multimedia system.

ⓘ Maintenance Management and the maintenance reminder in the multimedia system are not available in every country. Contact an authorized Mercedes-Benz Center to find out whether this function is available in your country.

Data transferred when using Maintenance Management

When the service is activated, relevant data is automatically transferred to determine the required scope of maintenance as well as malfunction detection and malfunction rectification.

Details on data transfer can be found in the data protection information for the Mercedes me connect services. These can be found at: https://www.mercedes.me under "My Mercedes me account", "Terms of use".

ⓘ Maintenance Management and the maintenance reminder in the multimedia system are not available in every country.

Telediagnosis

Notes about Telediagnosis

ⓘ This service is not available in all countries.

The vehicle can detect if certain wear parts need to be replaced or if malfunctions have occurred in vehicle systems. If the Telediagnosis service is activated, relevant data is automatically transmitted to the manufacturer. If fault conditions are

detected by the vehicle system self-diagnosis, the system transmits recommendations for action to the Mercedes-Benz customer center depending on the fault detected. The customer center transmits the data to the service partner that you have entered on the Mercedes me website at: http://www.mercedes.me.

For selected faults, the notification that a malfunction has been detected may appear in the multimedia system with a request to contact the Mercedes-Benz customer center. From this message, a call can be made directly to the customer center for assistance.

ⓘ The transmission of a notification to the multimedia system depends on the country, vehicle model and equipment and requires a fast data connection, over which the service provider has no influence.

ⓘ Reliable fault detection is subject to technical limitations. Therefore, only a limited selection of faults can be detected and recommendations for action transmitted to the customer center and the service partners. Mercedes-Benz AG is continuously working on the expansion of this service. The fault detection depends on the country, vehicle model and equipment.

Data transferred when using Telediagnostics

When the service is activated, relevant data is automatically transferred to determine the required scope of maintenance as well as malfunction detection and malfunction rectification.

Details on data transfer can be found in the data protection information for the Mercedes me connect services. These can be found at: https://www.mercedes.me under "My Mercedes me account", "Terms of use".

ⓘ The scope of the transmitted data depends on the vehicle model and its equipment. For technical reasons, not all data is available at all times.

Engine compartment

Active hood (pedestrian protection)

Operation of the active hood (pedestrian protection)

In certain accident situations, the actuation of the active hood reduces the risk of injury to pedestrians. The rear area of the hood is raised by approximately 3 in (80 mm).

After being triggered, the active hood remains in the raised position. Limited visibility due to the raised hood cannot be ruled out.

After the active hood has been actuated, pedestrian protection may be limited.

Have the full functionality of the active hood restored immediately in a qualified specialist workshop.

If necessary, adjust your seat position and drive carefully to a qualified specialist workshop. If it is not possible to continue your journey safely, contact a qualified specialist workshop.

Opening and closing the hood

WARNING Risk of accident due to driving with the hood unlocked

The hood may open and block your view.

- Never release the hood when driving.
- Before every trip, ensure that the hood is locked.

WARNING Risk of accident and injury when opening and closing the hood

The hood may suddenly drop into the end position.

There is a risk of injury for anyone in the hood's range of movement.

- Do not open or close the hood if there is a person in the hood's range of movement.

WARNING Risk of burns when opening the hood

If you open the hood in the event of an overheated engine or fire in the engine compartment, the following situations may occur:

- You may come into contact with hot gases.
- You may come into contact with other escaping hot operating fluids.

- Before opening the hood, allow the engine to cool down.
- In the event of a fire in the engine compartment, keep the hood closed and call the fire service.

WARNING Risk of injury due to moving parts

Components in the engine compartment may continue to run or start unexpectedly even when the drive system is switched off.

Observe the following if you must open the hood:

- Switch off the vehicle.
- Never touch the danger zones surrounding moving components, e.g. the rotation area of the fan.
- Remove jewelery and watches.
- Keep items of clothing and hair away from moving parts.

WARNING Risk of injury from touching live components

The ignition system and the fuel injection system operate with a high voltage. You could receive an electric shock.

- Never touch components of the ignition system or fuel injection system when the vehicle is switched on.

The live components include the following, for example:

- Ignition coils
- Fuel injectors

- Electric lines to the ignition coils and the fuel injectors

WARNING Risk of burns from hot component parts in the engine compartment

Certain component parts in the engine compartment can be very hot, e.g. the engine, the cooler and parts of the exhaust system.

- Allow the engine to cool down and only touch component parts described in the following.

WARNING Risk of injury from using the windshield wipers when the hood is open

If the windshield wipers start moving when the hood is open, you could be trapped by the wiper linkage.

- Always switch off the windshield wipers and the vehicle first if you need to open the hood.

Opening the hood

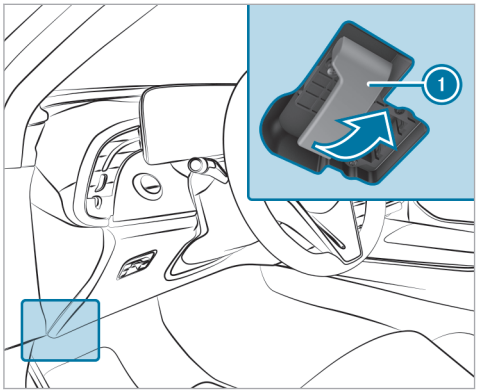

- To release the hood, pull on handle (1).

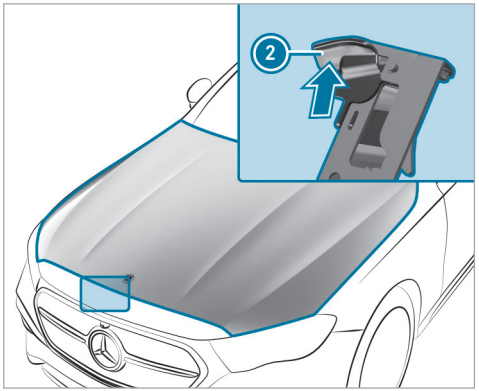

- Push handle (2) of the hood catch upwards and lift the hood until it opens automatically.

Closing the hood

NOTE Damage to the hood due to pressing the hood closed with your hand

If the hood is closed manually, there is a risk of dents.

▶ Do not close the hood manually.

▶ Lower the hood to a height of around 8 in (20 cm) and then allow it to fall, applying a little force as you let it go.

▶ If the hood can still be lifted slightly, open the hood again and close it with a little more force until it engages correctly.

Engine oil

Checking the engine oil level using the driver's display

Requirements

- The engine has been warmed up.
- The vehicle is parked on a level surface.
- The engine is running at idle speed.
- The hood is closed.

Determining the engine oil level can take up to 30 minutes with a normal driving style and even longer with an active driving style.

Driver's display:

→ Service

The engine oil level is shown.

One of the following messages will appear on the driver's display:

- Engine Oil Level Measuring Now...: the engine oil level cannot be determined yet.

▶ Repeat the request after a maximum of 30 minutes' driving.

- Engine Oil Level OK and the bar display for indicating the engine oil level on the driver's display is green and is between "min" and "max": the engine oil level is correct.
- Engine Oil Level Refill 1,0 liq.gal. and the bar display for indicating the engine oil level on the driver's display is yellow and is below "min":

▶ Add 1.1 US qt (1 l) of engine oil.

- Engine Oil Level Reduce and the bar display for indicating the engine oil level on the driver's display is yellow and is above "max":

▶ Drain off any excess engine oil that has been added. To do so, consult a qualified specialist workshop.

- For Engine Oil Level Switch on Vehicle

▶ Switch on the vehicle to check the engine oil level.

- Engine Oil Level System Inoperative: The oil level sensor is defective or not connected.

▶ Consult a qualified specialist workshop.

- Engine Oil Level System Currently Unavailable

▶ Close the hood.

Topping up engine oil

⚠ **WARNING** Risk of burns when opening the hood

If you open the hood in the event of an overheated engine or fire in the engine compartment, the following situations may occur:

- You may come into contact with hot gases.

- You may come into contact with other escaping hot operating fluids.

▶ Before opening the hood, allow the engine to cool down.

▶ In the event of a fire in the engine compartment, keep the hood closed and call the fire service.

⚠ WARNING Risk of injury due to moving parts

Components in the engine compartment may continue to run or start unexpectedly even when the drive system is switched off.

Observe the following if you must open the hood:

▶ Switch off the vehicle.

▶ Never touch the danger zones surrounding moving components, e.g. the rotation area of the fan.

▶ Remove jewelery and watches.

▶ Keep items of clothing and hair away from moving parts.

⚠ WARNING Risk of burns from hot component parts in the engine compartment

Certain component parts in the engine compartment can be very hot, e.g. the engine, the cooler and parts of the exhaust system.

▶ Allow the engine to cool down and only touch component parts described in the following.

⚠ WARNING Risk of fire and injury from engine oil

If engine oil comes into contact with hot component parts in the engine compartment, it may ignite.

▶ Make sure that no engine oil is spilled next to the filler opening.

▶ Allow the engine to cool off and thoroughly clean the engine oil from component parts before starting the vehicle.

! NOTE Engine damage caused by an incorrect oil filter, incorrect oil or additives

▶ Do not use engine oils or oil filters which do not correspond to the specifications explicitly prescribed for the service intervals.

▶ Follow the instructions on the service interval display for changing the engine oil and observe the prescribed change intervals.

▶ Do not use additives.

! NOTE Damage caused by adding too much engine oil

Excessive engine oil can damage the engine or the catalytic converter.

▶ Have excess engine oil removed in a qualified specialist workshop.

ⓘ Depending on driving style, the vehicle consumes up to 0.9 US qt (0.8 liters) of oil per 600 miles (1,000 km). The oil consumption may also be higher than this when the vehicle is new or if you frequently drive at high engine speeds.

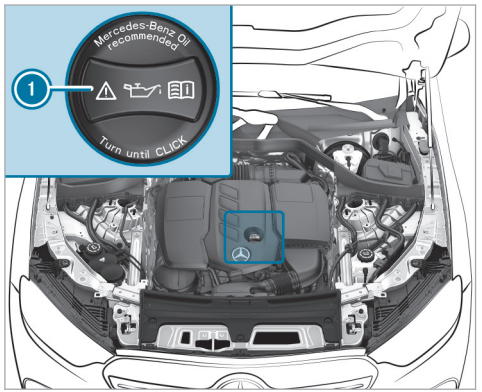

- Turn cap (1) counter-clockwise and remove it.
- Add engine oil.
- Replace cap (1) and turn it clockwise until it engages.
- Check the oil level again (→ page 27).

Checking the coolant level

⚠ WARNING Risk of burns when opening the hood

If you open the hood in the event of an overheated engine or fire in the engine compartment, the following situations may occur:

- You may come into contact with hot gases.
- You may come into contact with other escaping hot operating fluids.

- Before opening the hood, allow the engine to cool down.
- In the event of a fire in the engine compartment, keep the hood closed and call the fire service.

⚠ WARNING Risk of injury due to moving parts

Components in the engine compartment may continue to run or start unexpectedly even when the drive system is switched off.

Observe the following if you must open the hood:

- Switch off the vehicle.
- Never touch the danger zones surrounding moving components, e.g. the rotation area of the fan.
- Remove jewelery and watches.
- Keep items of clothing and hair away from moving parts.

⚠ WARNING Risk of burns from hot component parts in the engine compartment

Certain component parts in the engine compartment can be very hot, e.g. the engine, the cooler and parts of the exhaust system.

▶ Allow the engine to cool down and only touch component parts described in the following.

WARNING Risk of scalding from hot coolant

If you open the cap, you could scald yourself.

▶ Allow the engine to cool down before opening the cap.
▶ When opening the cap, wear protective gloves and safety glasses.
▶ Open the cap slowly to release pressure.

▶ Have the coolant checked or refilled only at a qualified specialist workshop.

Refilling the windshield washer system

WARNING Risk of burns when opening the hood

If you open the hood in the event of an overheated engine or fire in the engine compartment, the following situations may occur:

- You may come into contact with hot gases.
- You may come into contact with other escaping hot operating fluids.

▶ Before opening the hood, allow the engine to cool down.
▶ In the event of a fire in the engine compartment, keep the hood closed and call the fire service.

WARNING Risk of injury due to moving parts

Components in the engine compartment may continue to run or start unexpectedly even when the drive system is switched off.

Observe the following if you must open the hood:

▶ Switch off the vehicle.
▶ Never touch the danger zones surrounding moving components, e.g. the rotation area of the fan.
▶ Remove jewelery and watches.
▶ Keep items of clothing and hair away from moving parts.

WARNING Risk of burns from hot component parts in the engine compartment

Certain component parts in the engine compartment can be very hot, e.g. the engine, the cooler and parts of the exhaust system.

▶ Allow the engine to cool down and only touch component parts described in the following.

WARNING - Risk of fire and injury from windshield washer concentrate

Windshield washer concentrate is highly flammable. It could ignite if it comes into contact with hot engine component parts or the exhaust system.

- Make sure that no windshield washer concentrate spills out next to the filler opening.

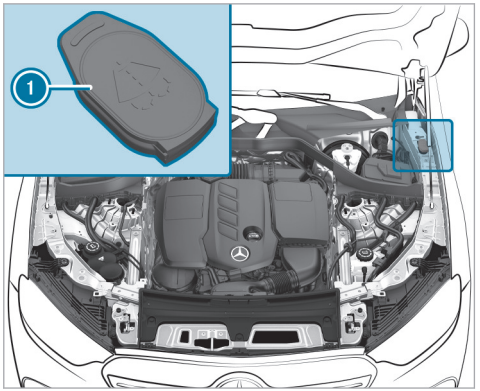

- Open cap (1) by the tab.
- Add washer fluid.

Keeping the air/water duct free

- Keep the area between the hood and the windshield free of deposits, e.g. ice, snow or leaves.

Cleaning and care

Information on washing the vehicle in a car wash

WARNING Risk of accident due to reduced braking effect after washing the vehicle

The braking effect is reduced after washing the vehicle.

- After the vehicle has been washed, brake carefully while paying attention to the traffic conditions until the braking effect has been fully restored.

NOTE Damage from automatic braking

If one of the following functions is activated, the vehicle will brake automatically in certain situations:

- Active Brake Assist
- Active Distance Assist DISTRONIC
- HOLD function
- Active Parking Assist

To avoid damage to the vehicle, switch off these systems, e.g. when towing or using a car wash.

! NOTE Damage due to unsuitable car wash

- Before driving into a car wash make sure that the car wash is suitable for the vehicle dimensions.
- Ensure there is sufficient ground clearance between the underbody and the guide rails of the car wash.
- Ensure that the clearance width of the car wash, in particular the width of the guide rails, is sufficient.

To avoid damage to your vehicle when using a car wash, ensure the following beforehand:

- Active Distance Assist DISTRONIC is deactivated.
- the HOLD function is switched off.
- the 360° camera or the reversing camera is switched off.
- the vehicle is locked and the door handles retracted.
- the side windows and sliding sunroof are completely closed.
- the outside mirrors are folded in.
- the blower for the ventilation and heating is switched off.
- the windshield wiper switch is in position 0.
- the key is at a minimum distance of 20 ft (6 m) away from the vehicle. Otherwise, the trunk lid or a door could open unintentionally.

  This also applies to the Digital Vehicle Key.
- for car washes with a conveyor system:
  - Neutral N is engaged.
  - The vehicle is locked from the inside.
- Do not make any hand movements in the area of the overhead control panel or deactivate (→ page 394) the Sliding Sunroof and Roller Sunblind option in the settings for the MBUX interior assistant.

ⓘ If, after the car wash, you remove the wax from the windshield and wiper blades, this will prevent smearing and reduce wiper noise.

Information on using a power washer

⚠ WARNING Risk of an accident when using power washers with round-spray nozzles

The water jet can cause externally invisible damage.

Components damaged in this way may unexpectedly fail.

- Do not use a power washer with round-spray nozzles.
- Have damaged tires or chassis parts replaced immediately.

To avoid damage to your vehicle when using a power washer, ensure the following:

- the key is at a minimum distance of 10 ft (3 m) away from the vehicle. Otherwise, the trunk lid or a door could open unintentionally.

  This also applies to the Digital Vehicle Key.

- Keep a minimum distance of 11.8 in (30 cm) from the vehicle.
- **Vehicles with decorative foil:** parts of your vehicle are covered with decorative foil. Maintain a minimum distance of 27.6 in (70 cm) between the foiled parts of the vehicle and the power washer nozzle. Move the power washer nozzle around when cleaning your vehicle. The water temperature of the power washer must not exceed 140°F (60°C).
- Observe the information on the correct distance in the operating instructions of the equipment manufacturer.
- Do not direct the nozzle of the power washer directly at sensitive parts, e.g. tires, gaps, electrical component parts, batteries, illuminants or louvers.

Washing the vehicle by hand

NOTE Engine damage due to water ingress

- Take care not to point the water jet directly towards the air inlet grille below the hood.

Observe the relevant legal requirements (e.g. in some countries, washing by hand is permitted only in specially designated wash bays).

- Use a mild cleaning agent (e.g. car shampoo).
- Do not use an acidic cleaning agent.
- Wash the vehicle with lukewarm water using a soft car sponge. When doing so, do not expose the vehicle to direct sunlight.
- Carefully hose the vehicle off with water and dry using a chamois.

ⓘ Observe the notes on the care of car parts (→ page 516).

Notes on paintwork/matte finish paintwork care

To avoid damaging the paintwork and interfering with the driving assistance systems, please observe the following notes:

Paint

- Insect remains: soak with insect remover and rinse off the treated areas afterwards.
- Bird droppings: soak with water and rinse off afterwards.
- Tree resin, oils, fuels and greases: remove by rubbing gently with a cloth soaked in petroleum ether or lighter fluid.
- Coolant and brake fluid: remove with a damp cloth and clean water.
- Tar stains: use tar remover.
- Wax: use silicone remover.
- Do not attach stickers, films or similar materials. Only have film attached to the bumper at a qualified specialist workshop.
- Remove dirt immediately, where possible. Do not use acidic solutions and acidic cleaning agents.

Matte finish

- Only use care products approved for Mercedes-Benz.
- Do not attach stickers, films or similar materials. Only have film attached to the bumper at a qualified specialist workshop.
- Do not polish the vehicle or the light-alloy wheels.
- Only use car washes that correspond to the latest engineering standards.
- Do not use a car wash program with a final hot wax treatment.
- Do not use paint cleaners, buffing or polishing products, gloss preservers, e.g. wax.

In the event of paintwork damage:

- Always have paintwork repairs carried out at a qualified specialist workshop.
- Make sure the radar sensors function (→ page 272).

Notes on cleaning decorative films

Observe the "Notes on paintwork/matte finish paintwork care" (→ page 514). They also apply to matte decorative films.

Observe the notes on cleaning decorative films to avoid damage.

Cleaning

- For cleaning, use plenty of water and a mild cleaning agent without additives or abrasive substances (e.g. a car shampoo approved for Mercedes-Benz).
- Do not use an acidic cleaning agent.
- Remove dirt as soon as possible. Avoid rubbing too hard in order not to damage the decorative film irreparably.
- If there is dirt on the finish or if the decorative film is dull: use the paint cleaner recommended and approved for Mercedes-Benz.
- Insect remains: soak with insect remover and rinse off the treated areas afterwards.
- Bird droppings: soak with water and rinse off afterwards.
- To prevent water stains, dry a film-wrapped vehicle with a soft, absorbent cloth after every car wash.

Avoiding damage to the decorative film

- The service life and color of decorative films are impaired by:
  - Sunlight
  - Temperature (e.g. hot air blower)
  - Weather conditions
  - Stone chippings and dirt
  - Chemical cleaning agents
  - Oily products
- Do not use polish on matte decorative film. Polishing will have the effect of shining the film-wrapped surface.
- Do not treat matte or structured decorative films with wax. Permanent stains may occur.

Scratches, corrosive deposits, areas affected by corrosion and damage caused by incorrect care cannot always be completely repaired. In this case, contact a qualified specialist workshop.

You can obtain more information on care and cleaning agents from the manufacturer.

In the case of film-wrapped surfaces, visual differences may occur between the surfaces that were not protected by a decorative film after a decorative film has been removed.

ⓘ Have work or repairs to decorative films carried out at a qualified specialist workshop (e.g. at an authorized Mercedes-Benz Center).

Notes on cleaning and care of vehicle parts

⚠ **WARNING** Risk of entrapment if the windshield wipers are switched on while the windshield is being cleaned

If the windshield wipers are set in motion while you are cleaning the windshield or wiper blades, you can be trapped by the wiper arm.

▶ Always switch off the windshield wipers and the vehicle before cleaning the windshield or wiper blades.

! **NOTE** Damage caused by acidic cleaning agents

▶ Do not use acidic cleaning agents. Otherwise, the surfaces could be damaged.

To avoid damage to the vehicle, observe the notes on cleaning and care of the following car parts:

Wheels and rims

- Use water and acid-free alloy wheel cleaners.
- Do not use acidic alloy wheel cleaners to remove brake dust. This could damage wheel bolts and brake components.
- To avoid corrosion of the brake discs and pads, drive the vehicle for a few minutes after cleaning before parking it. The brake discs and pads will warm up and dry out.

Windows

! **NOTE** Damage to electronic components due to excess fluids

When cleaning the windows from the inside, fluids such as cleaning agents or water may run down and get behind trim parts of the vehicle interior and cause damage to electronic components.

▶ Use cleaning agents as sparingly as possible.

▶ Immediately absorb any excess fluids.

- Clean the windows inside and outside with a damp cloth and with a cleaning agent recommended for Mercedes-Benz.
- Do not use dry cloths or abrasive or solvent-based cleaning agents to clean the insides of windows.

ⓘ After changing the wiper blades or treating the vehicle with wax, clean the windshield thoroughly with cleaning agents recommended for Mercedes-Benz. Failure to observe the application instructions may result in damage, smear marks or glare spots.

ⓘ Remove external fogging or dirt on the windshield in front of the multifunction camera. Otherwise, driving systems and driving safety systems may be impaired or not available (→ page 272).

Wiper blades

- Move the wiper arms into the replacement position (→ page 24).
- With the wiper arms folded out, clean the wiper blades with a damp cloth.

ⓘ Make sure that the wiper blades are coated. The coating may leave residue on a cloth. Do not rub the wiper blades excessively or clean them too often.

Exterior lighting

- Clean the lenses with a wet sponge and mild cleaning agent (e.g. car shampoo).
- Use only cleaning agents or cleaning cloths that are suitable for plastic lenses.

Sensors

- Clean the sensors in the front and rear part of the vehicles with car shampoo, plenty of water and a soft cloth (→ page 272).
- When using a power washer, maintain a minimum distance of 11.8 in (30 cm).

Cameras

- Open the camera cover with the multimedia system (→ page 325).
- Use clean water and a soft cloth to clean the camera lenses.
- Do not use a power washer.

ⓘ Remove external fogging or dirt on the windshield in front of the multifunction camera. Otherwise, driving systems and driving safety systems may be impaired or not available (→ page 272).

Notes on care of the interior

⚠ **WARNING** Risk of injury from plastic parts breaking off after the use of solvent-based care products

Care and cleaning products containing solvents can cause surfaces in the cockpit to become porous. When the airbags are deployed, plastic parts may break away.

▶ Do not use any care or cleaning products containing solvents to clean the cockpit.

⚠ **WARNING** Risk of injury or fatal injuries from bleached seat belts

Bleaching or dyeing seat belts can severely weaken them.

This can, for example, cause seat belts to tear or fail in an accident.

▶ Never bleach or dye seat belts.

! **NOTE** Property damage due to disinfectants

The interior includes a number of sensitive surfaces such as displays, plastics and leather.

Disinfectants can contain alcohol and other substances that penetrate and damage surfaces. Technology behind buttons and displays can also be damaged.

▶ Do not use disinfectant on interior surfaces.

To avoid damage to the vehicle, observe the following notes on cleaning and care:

Seat belts
- Clean with lukewarm soapy water.
- Do not use chemical cleaning agents.
- Do not dry by heating them to over 176°F (80°C) or exposing them to direct sunlight.

Display
- Switch off the display and let it cool down.
- Clean the surface carefully with a microfiber cloth and a suitable display care product (TFT-LCD).
- Do not use any other agents.

Head-up display
- Clean with a soft, non-static, lint-free cloth.
- Do not use cleaning agents.

Plastic trim
- Clean with a damp microfiber cloth.
- For heavy soiling: use a cleaning agent recommended for Mercedes-Benz.
- Do not attach stickers, films or similar materials.
- Do not allow cosmetics, insect repellent or sun cream to come into contact with the plastic trim.

Real wood and trim elements
- Clean with a microfiber cloth.
- Black piano-lacquer look: clean with a damp cloth and soapy water.
- For heavy soiling: use a cleaning agent recommended for Mercedes-Benz.
- Do not use solvent-based cleaning agents, polishes or waxes.

Headliner
- Clean with a brush or dry shampoo.

Carpet
- Use a carpet and textile cleaning agent recommended for Mercedes-Benz.

Steering wheels made of imitation leather
- Use a damp cotton cloth and a 1% soap solution to clean the entire steering wheel. Do not spot clean.
- Use cleaning and care products recommended for Mercedes-Benz.
- Do not use a microfiber cloth.
- Do not use oil-based cleaning and care products.

Steering wheel made of genuine leather or DINAMICA

! **NOTE** Damage caused by wrong cleaners

▶ Do not use solvent-based cleaning agents such as tar remover or wheel cleaner; neither should you use polishes or waxes. Otherwise you may damage the finish.

- Clean with a damp cloth and a 1% soapy water solution and then wipe with a dry cloth.
- For heavy soiling: use a cleaning agent recommended for Mercedes-Benz.
- Leather care: use a leather care agent that has been recommended for Mercedes-Benz.
- Do not allow the leather to become too damp.
- Do not use a microfiber cloth.

ⓘ Leather is a natural product. It exhibits natural surface properties such as differences in structure, marks caused by growth and injury or subtle color differences. These surface properties are characteristics of leather and not material defects. Leather is also subject to a natural aging process during which the surface properties change.

Genuine leather seat covers

- Vacuum up dirt such as crumbs or dust and then clean the seat covers with a damp cotton cloth and wipe down with a dry cloth. Regularly clean the seat covers.
- For heavy soiling: use a leather care agent recommended for Mercedes-Benz aftercare.
- Leather care: use a leather care agent that has been recommended for Mercedes-Benz.
- Do not use a microfiber cloth.
- Do not allow the leather to become too damp.
- Do not use oil-based cleaning and care products.

ⓘ Leather is a natural product. It exhibits natural surface properties such as differences in structure, marks caused by growth and injury or subtle color differences. These surface properties are characteristics of leather and not material defects. Leather is also subject to a natural aging process during which the surface properties change.
Waves or wrinkling in the seat cover may occur due to the stress on the seat; this is caused by the natural leather material. Regular cleaning and care of the leather reduces soiling, wear marks and aging damage and thus significantly extends its life span. Clothing that can leave stains (e.g. jeans) may discolor the leather.

DINAMICA seat covers

- Vacuum up dirt such as crumbs or dust and then use a damp cloth to clean.
- Do not use a microfiber cloth.

Imitation leather seat covers

- Vacuum up dirt such as crumbs or dust and then use a damp cotton cloth and a 1% soap solution to clean the entire seat cover. Do not spot clean.
- Use cleaning and care products recommended for Mercedes-Benz.
- Do not use a microfiber cloth.
- Do not use oil-based cleaning and care products.

Fabric seat covers

- Vacuum up dirt such as crumbs or dust and then use a damp microfiber cloth and a 1% soap solution to clean the entire seat cover. Do not spot clean.
- Use cleaning and care products recommended for Mercedes-Benz.
- Do not use oil-based cleaning and care products.

Emergency

Removing the safety vest

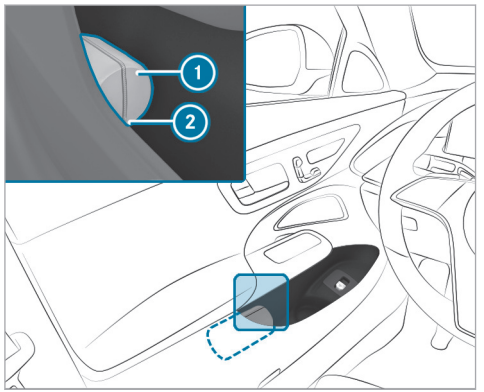

There is a safety vest compartment in the stowage compartments of all doors for storing a safety vest.

- To remove: pull out safety vest bag (1) by loop (2).
- Open safety vest bag (1) and pull out the safety vest.
- To stow: fold the reflective safety jacket, roll it up and stow it in safety jacket bag (1).
- Slide safety jacket bag (1) along the lower edge of the armrest into the safety jacket compartment. Meanwhile, ensure that loop (2) hangs out well within reach.

ⓘ Remove a new reflective safety jacket from its packaging material before sliding it into the safety jacket compartment. The packaging material may otherwise cause it to slip out or make removing it difficult.
Observe the legal requirements in each country.

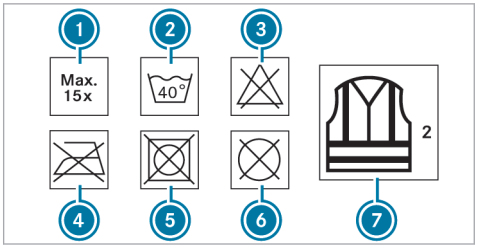

(1) Maximum number of washes
(2) Maximum wash temperature
(3) Do not bleach
(4) Do not iron
(5) Do not tumble dry
(6) Do not dry clean
(7) Class 2 safety vest

The requirements defined by the legal standard are only fulfilled if the safety vest is the correct size and is fully closed.

Replace the safety vest in the following cases:

- The reflective strips are damaged or dirty

- The maximum permissible number of washes is exceeded
- The fluorescence has faded, e.g. due to continuous exposure to sunlight.

Dispose of the safety vest in an environmentally responsible manner:

- To do so, contact your local waste disposal company.

Warning triangle

Removing the warning triangle

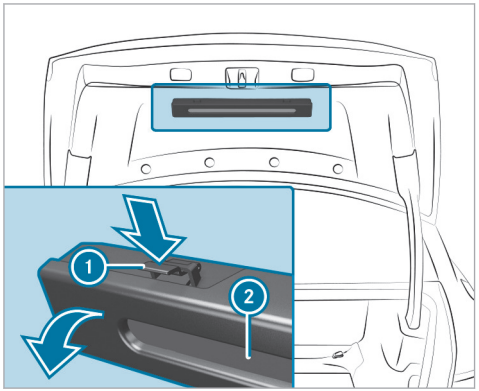

- Push warning triangle holder (1) on both sides in the direction of the arrow and open it.
- Remove warning triangle (2).

The warning triangle is located in the trunk lid.

Setting up the warning triangle

- Fold the side reflectors upwards to form a triangle and attach at the top using the upper press-stud.
- Fold the legs down and out to the side.

First-aid kit (soft-sided) overview

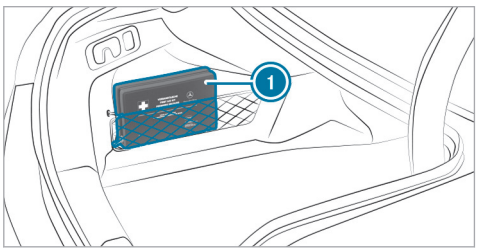

First-aid kit (soft sided) (1) is in the trunk in the left-hand stowage net.

Depending on the vehicle version, first-aid kit (soft-sided) (1) may be located elsewhere in the trunk

Flat tire

Notes on flat tire

WARNING Risk of accident due to a flat tire

A flat tire severely affects the driving characteristics as well as the steering and braking of the vehicle.

Tires without run-flat characteristics:

- Do not drive with a flat tire.
- Change the flat tire immediately with an emergency spare wheel or spare wheel. Alternatively, consult a qualified specialist workshop.

Tires with run-flat characteristics:

- Observe the information and warning notes on MOExtended tires (run-flat tires).

In the event of a flat tire, the following options are available depending on your vehicle's equipment:

- **Vehicles with MOExtended tires:** it is possible to continue the journey for a short period of time. Make sure you observe the notes on MOExtended tires (run-flat tire) (→ page 522).
- **Vehicles with a TIREFIT kit:** you can seal the tire so that it is possible to continue the journey for a short period of time. To do this, use the TIREFIT kit (→ page 524).
- **Vehicles with Mercedes me connect:** you can make a call for breakdown assistance via the overhead control panel in the case of a breakdown (→ page 469).
- **All vehicles:** change the wheel (→ page 568).

ⓘ The emergency spare wheel is available only in certain countries (→ page 574).
Vehicles equipped with MOExtended tires are not equipped with a TIREFIT kit at the factory. It is therefore recommended that you additionally equip your vehicle with a TIREFIT kit if you mount tires that do not feature run-flat characteristics, e.g. winter tires. A TIREFIT kit may be obtained from a qualified specialist workshop.
Vehicles with a Mercedes-Benz emergency call system and that are not equipped with a TIREFIT kit: in the event of a flat tire, contact the Customer Assistance Center for the Mercedes-Benz emergency call system .

Notes on MOExtended tires (run-flat tires)

WARNING Risk of accident when driving in limp-home mode

When driving in emergency mode the handling characteristics are impaired.

- Do not exceed the specified maximum speed of the MOExtended tires.
- Avoid any abrupt steering and driving maneuvers as well as driving over obstacles (curbs, pot holes, off-road). This applies, in particular, to a loaded vehicle.
- Stop driving in the emergency mode if you notice:

- Banging noise
- Vehicle vibration
- Smoke which smells like rubber
- Continuous ESP® intervention
- Cracks in the tire side walls

▶ After driving in emergency mode, have the rims checked by a qualified specialist workshop with regard to their further use.

▶ The defective tire must be replaced in every case.

With MOExtended tires (run-flat tires), you can continue to drive your vehicle even if there is a total loss of pressure in one or more tires. However, the tire affected must not show any clearly visible damage.

You can recognize MOExtended tires by the MOExtended marking which appears on the side wall of the tire.

Vehicles with tire pressure loss warning system:
MOExtended tires may only be used in conjunction with an activated tire pressure loss warning system.

Vehicles with tire pressure monitoring system:
MOExtended tires may only be used in conjunction with an activated tire pressure monitoring system.

If a pressure loss warning message appears in the driver's display, proceed as follows:

- Check the tire for damage.
- If driving on, observe the following notes.

Driving distance possible in emergency mode after the pressure loss warning:

Load condition	Driving distance possible in emergency mode
Partially laden	50 miles (80 km)
Fully laden	19 miles (30 km)

The driving distance possible in emergency mode may vary depending on the driving style. Observe the maximum permissible speed of 50 mph (80 km/h).

If a tire has gone flat and cannot be replaced with an MOExtended tire, you can use a standard tire as a temporary measure.

TIREFIT kit storage location

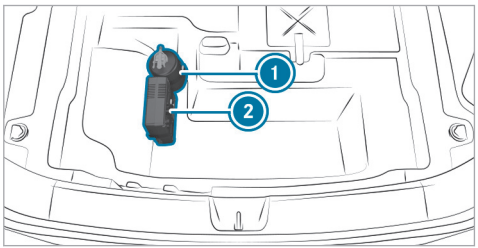

① Tire sealant bottle
② Tire inflation compressor

The TIREFIT kit is located under the trunk floor when the vehicle is delivered.

Depending on the vehicle version, the TIREFIT kit may be located elsewhere in the trunk.

ⓘ Depending on the power category (LK), the tire inflation compressor weighs as follows:

- LK2 – 12 V/15 A, 180 W, 2 lbs (0.9 kg)

You can find information on the power category (LK) and/or electrical data on the back of the tire inflation compressor.
The tire inflation compressor is maintenance-free. If there is a malfunction, please contact a qualified specialist workshop.

Using the TIREFIT kit

Requirements

- Tire sealant bottle and tire inflation compressor are ready for use (→ page 53).
- TIREFIT sticker is present.
- Gloves are present.

TIREFIT kit storage location: (→ page 53)

You can use TIREFIT tire sealant to seal perforation damage of up to 0.16 in (4 mm), particularly in the tire tread. You can use TIREFIT in outside temperatures down to -4 °F (-20 °C).

⚠ WARNING Risk of accident when using tire sealant

The tire sealant may be unable to seal the tire properly, especially in the following cases:

- There are large cuts or punctures in the tire (larger than damage previously mentioned)
- The wheel rims have been damaged
- After journeys with very low tire pressure or with flat tires

▶ Do not continue driving.
▶ Consult a qualified specialist workshop.

⚠ WARNING Risk of injury and poisoning from tire sealant

The tire sealant is harmful and causes irritation. Do not allow it to come into contact with the skin, eyes or clothing, and do not swallow it. Do not inhale tire sealant fumes. Keep the tire sealant away from children.

If you come into contact with the tire sealant, observe the following:

▶ Rinse off the tire sealant from your skin immediately using water.
▶ If tire sealant gets into your eyes, thoroughly rinse out the eyes using clean water.
▶ If tire sealant has been swallowed, immediately rinse out the mouth thoroughly and drink plenty of water. Do not induce vomiting and seek medical attention immediately.
▶ Change out of any clothes contaminated with tire sealant immediately.
▶ If allergic reactions occur, seek medical attention immediately.

! NOTE Overheating due to the tire inflation compressor running too long

▶ Do not run the tire inflation compressor for longer than ten minutes without interruption.

Comply with the manufacturer's safety notes on the sticker on the tire inflation compressor.

Have the tire sealant bottle replaced in a qualified specialist workshop every five years.

- Do not remove any foreign objects which have entered the tire.

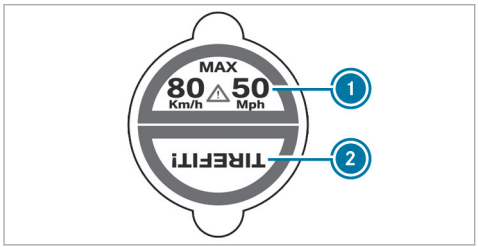

- Affix part (1) of the TIREFIT sticker to the instrument cluster within the driver's field of vision.
- Affix part (2) of the TIREFIT sticker near the valve on the wheel with the defective tire.

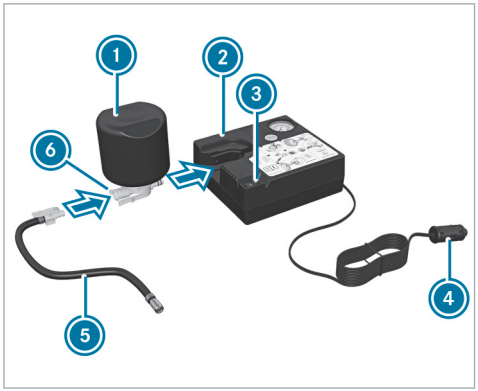

- Pull plug (4) with the cable and hose (5) out of the tire inflation compressor housing.
- Push the plug of hose (5) into flange (6) of tire sealant bottle (1) until the plug engages.
- Place tire sealant bottle (1) head downwards into recess (2) of the tire inflation compressor.

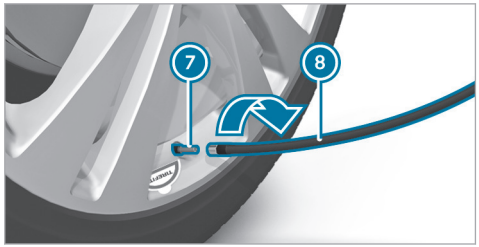

- Remove the valve cap from valve (7) on the defective tire.
- Screw filling hose (8) onto valve (7).
- Insert plug (4) into a 12 V socket in your vehicle.
- Switch on the vehicle.
- Press on and off switch (3) on the tire inflation compressor.
  The tire inflation compressor is switched on. The tire is inflated. First, tire sealant is pumped into the tire. The pressure may briefly rise to approximately 500 kPa (5 bar/73 psi).

Do not switch off the tire inflation compressor during this phase!

- Let the tire inflation compressor run for a maximum of ten minutes.
  The tire should then have attained a tire pressure of at least 200 kPa (2.0 bar/29 psi).

If tire sealant leaks out, make sure you clean the affected areas as quickly as possible. It is preferable to use clean water.

If you get tire sealant on your clothing, have it cleaned as soon as possible with perchloroethylene.

If, after ten minutes, a tire pressure of 200 kPa (2.0 bar/29 psi) has not been attained:

- Switch off the tire inflation compressor.
- Unscrew the filling hose from the valve of the defective tire.

Please note that tire sealant may leak out when you unscrew the filling hose.

- Drive forwards or in reverse very slowly for approximately 33 ft (10 m).
- Pump up the tire again.
  After a maximum of ten minutes the tire pressure must be at least 200 kPa (2.0 bar/29 psi).

WARNING Risk of accident due to the specified tire pressure not being achieved

If the specified tire pressure is not achieved after the specified time, the tire is too badly damaged. The tire sealant cannot repair the tire in this instance.

The braking characteristics as well as the driving characteristics may be greatly impaired.

- Do not continue driving.
- Consult a qualified specialist workshop.

If, after ten minutes, a tire pressure of 200 kPa (2.0 bar/29 psi) has been attained:

WARNING Risk of accident from driving with sealed tires

A tire temporarily sealed with tire sealant impairs the handling characteristics and is not suitable for higher speeds.

- Adapt your driving style accordingly and drive carefully.
- Do not exceed the maximum speed limit with a tire that has been repaired using tire sealant.
- Observe the maximum permissible speed of 50 mph (80 km/h) for a tire sealed with tire sealant.
- Affix the upper section of the TIREFIT sticker to the instrument cluster in a location where it will be easily seen by the driver.

NOTE Staining caused by leaking tire sealant

After use, excess tire sealant may leak out from the filling hose.

- Therefore, place the filling hose in the plastic bag that contained the TIREFIT kit.

ENVIRONMENTAL NOTE Environmental pollution caused by environmentally irresponsible disposal

Tire sealant contains pollutants.

- Have the tire sealant bottle disposed of professionally, e.g. at an authorized Mercedes-Benz Center.

- Switch off the tire inflation compressor.
- Unscrew the filling hose from the valve of the defective tire.
- Stow the tire sealant bottle and the tire inflation compressor.
- **Pull away immediately.**
- Stop driving after approximately ten minutes and check the tire pressure using the tire inflation compressor.
  The tire pressure must now be at least 130 kPa (1.3 bar/19 psi).

WARNING Risk of accident due to the specified tire pressure not being attained

If the specified tire pressure is not reached, the tire is too badly damaged. The tire sealant cannot repair the tire in this instance.

The braking and driving characteristics may be greatly impaired.

- Do not continue driving.
- Consult a qualified specialist workshop.

In cases such as the one mentioned above, contact an authorized Mercedes-Benz Center. Or call 1-800-FOR-MERCedes (in the USA) or 1-800-387-0100 (in Canada).

- Correct the tire pressure if it is still at least 130 kPa (1.3 bar/19 psi). See the Tire and Loading Information placard on the B-pillar on the driver's side or the tire pressure table in the fuel filler flap for values.
- **To increase the tire pressure:** switch on the tire inflation compressor.

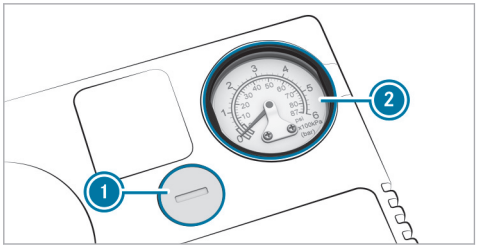

- **To reduce the tire pressure:** press pressure release button (1) next to manometer (2).
- When the tire pressure is correct, unscrew the filling hose from the valve of the sealed tire.
- Screw the valve cap onto the valve of the sealed tire.

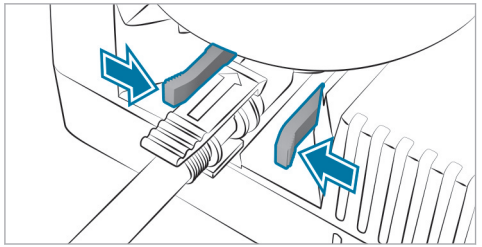

- Pull the tire sealant bottle out of the tire inflation compressor. Press the locking tabs on the yellow cap together to do this.
  The filling hose stays on the tire sealant bottle.
- Drive to the nearest qualified specialist workshop and have the tire, tire sealant bottle and filling hose replaced there.

Battery (vehicle)

Notes on the 12 V battery

⚠ WARNING Risk of an accident due to work carried out incorrectly on the battery

Work carried out incorrectly on the battery can, for example, lead to a short circuit. This can restrict functions relevant for safety systems and impair the operating safety of your vehicle.

You could lose control of the vehicle in the following situations in particular:

- When braking
- In the event of abrupt steering maneuvers and/or when the vehicle's speed is not adapted to the road conditions

- In the event of a short circuit or a similar incident, contact a qualified specialist workshop immediately.
- Do not drive on.
- Always have work on the battery carried out at a qualified specialist workshop.

- Further information on ABS (→ page 274)
- Further information on ESP® (→ page 275)

For safety reasons, Mercedes-Benz recommends that you use only batteries that have been approved for your vehicle by Mercedes-Benz.

All vehicles except vehicles with lithium-ion batteries

⚠ WARNING Risk of explosion due to electrostatic charge

Electrostatic charge can ignite the highly explosive gas mixture in the battery.

- To discharge any electrostatic charge that may have built up, touch the metal vehicle body before handling the battery.

The highly flammable gas mixture is created while the battery is charging and during jump-starting.

⚠ WARNING Danger of chemical burns from the battery acid

Battery acid is caustic.

- Avoid contact with the skin, eyes or clothing.
- Do not lean over the battery.
- Do not inhale battery gases.
- Keep children away from the battery.
- Immediately rinse battery acid off thoroughly with plenty of clean water and seek medical attention immediately.

All vehicles

ENVIRONMENTAL NOTE Environmental damage due to improper disposal of batteries



Batteries contain pollutants. It is illegal to dispose of them with the household rubbish.

-  Dispose of batteries in an environmentally responsible manner.

Take discharged batteries to a qualified specialist workshop or to a collection point for used batteries.

If you have to disconnect the 12 V battery, contact a qualified specialist workshop.

Observe the safety notes and protective measures when handling batteries.

 Risk of explosion if the 12 V battery is used improperly.

 Fire, open flames and smoking are prohibited when you are handling the battery. Avoid creating sparks.

 Electrolyte or battery acid is corrosive. Avoid contact with the skin, eyes or clothing. Wear suitable protective clothing, especially gloves, an apron and a safety mask. Immediately rinse electrolyte or acid splashes off with clean water. Consult a doctor immediately.

 Do not place heavy objects on the surface of the battery or use the battery to support a person in any way.

 Wear eye protection.

 Keep children away.

 Observe this Operator's Manual.

Observe the following if you are intending not to use the vehicle for an extended period of time:

- Connect the battery to a charger recommended by Mercedes-Benz or consult a qualified specialist workshop to disconnect the battery.

Notes on the 48 V battery

WARNING Risk of an accident due to work carried out incorrectly on the battery

Work carried out incorrectly on the battery can, for example, lead to a short circuit. This can restrict functions relevant for safety systems and impair the operating safety of your vehicle.

You could lose control of the vehicle in the following situations in particular:

- When braking
- In the event of abrupt steering maneuvers and/or when the vehicle's speed is not adapted to the road conditions

▶ In the event of a short circuit or a similar incident, contact a qualified specialist workshop immediately.

▶ Do not drive on.

▶ Always have work on the battery carried out at a qualified specialist workshop.

- Further information on ABS (→ page 274)
- Further information on ESP® (→ page 275)

ENVIRONMENTAL NOTE Environmental damage due to improper disposal of batteries

Batteries contain pollutants. It is illegal to dispose of them with the household trash.

▶ **Li-ion** Dispose of batteries in an environmentally responsible manner. Take discharged batteries to a qualified specialist workshop or to a collection point for used batteries.

Have any work on the 48 V battery carried out only at a qualified specialist workshop.

Comply with safety notes and take protective measures when handling batteries.


Risk of explosion if the 48 V battery is used improperly.


The surface of the 48 V battery may be hot.


Fire, naked flames and smoking are prohibited when handling the battery. Avoid creating sparks.


Electrolyte or battery acid is corrosive. Avoid contact with the skin, eyes or clothing. Wear suitable protective clothing, in particular gloves, an apron and a face mask. Immediately rinse off splashes of electrolyte or acid with plenty of clean water. Consult a doctor immediately.


Do not place heavy objects on the surface of the battery or use the battery to support a person in any way.


Do not perform any work on the battery. Always have any work on the battery carried out at a qualified specialist workshop. Do not disconnect the battery yourself. Do not remove the battery yourself. Do not attempt to open the battery.


Keep children away.


Wear safety glasses.


Observe this Operator's Manual.

If you do not want to use the vehicle for a long period of time, consult a qualified specialist workshop.

Notes on starting assistance and charging the 12 V battery

All vehicles

When charging the battery and during starting assistance, always use the jump-start connection point in the engine compartment.

NOTE Damage to the battery due to overvoltage

When charging using a battery charger without a maximum charging voltage, the battery or the on-board electronics may be damaged.

- Only use battery chargers with a maximum charging voltage of 14.8 V.

WARNING Risk of explosion due to the ignition of hydrogen gas

If there is a short circuit or sparks are created, there is a danger of hydrogen gas igniting when you charge the battery.

- Make sure that the POSITIVE terminal of a connected battery does not come into contact with vehicle parts.
- Never place metal objects or tools on a battery.
- When connecting and disconnecting the battery, always observe the sequence of battery terminals described.
- During starting assistance, always take care to connect only battery terminals of identical polarity.
- During starting assistance, observe the sequence described for connecting and disconnecting the jumper cables.
- Do not connect or disconnect the battery terminals with the engine running.

WARNING Risk of explosion due to a mixture of explosive gases

A mixture of explosive gases can escape from the battery during charging and jump starting.

- Fire, open flames, smoking and creating sparks must be avoided.
- Make sure that there is sufficient ventilation.
- Do not stand over the battery.

WARNING Risk of explosion from a frozen battery

A discharged battery may freeze at temperatures slightly above or below freezing point.

During starting assistance or battery charging, battery gas can be released.

- Always allow a battery to thaw before charging it or performing starting assistance.

If the indicator/warning lamps on the instrument cluster do not light up at low temperatures, it is very likely that the discharged battery has frozen. In this case, you may neither jump-start the vehicle nor charge the battery.

The service life of a battery that has been thawed may be dramatically shortened. The starting char-

acteristics may be impaired, especially at low temperatures.

It is recommended that you have a thawed battery checked at a qualified specialist workshop.

All vehicles

NOTE Damage caused by numerous or extended attempts to start the engine

Numerous or extended attempts to start the engine may damage the catalytic converter due to non-combusted fuel.

- Avoid numerous and extended attempts to start the engine.

Observe the following points during starting assistance and when charging the battery:

- Use only undamaged jumper cables/charging cables with a sufficient cross-section and insulated terminal clamps.
- Non-insulated parts of the terminal clamps must not come into contact with other metal parts while the jumper cable/charging cable is connected to the battery/jump-start connection point.
- The jumper cable/charging cable must not come into contact with any parts that may move when the engine is running.
- Always make sure that neither you nor the battery is electrostatically charged.
- Keep away from fire and naked flames.
- Do not lean over the battery.

Observe the additional following points when charging the battery:

- Use only battery chargers tested and approved for Mercedes-Benz.
- Read the battery charger's operating instructions before charging the battery.

Observe the additional following points during starting assistance:

- Starting assistance may be provided only using vehicles, batteries or other jump start devices with a nominal voltage of 12 V.
- The vehicles must not touch.
- **Vehicles with gasoline engines:** jump-start the vehicle only when the engine and exhaust system are cold.

Starting assistance and charging the 12 V battery

Preparing starting assistance/charging

- Secure the vehicle by applying the electric parking brake.
- Shift the transmission to position P.
- Switch off the vehicle and all electrical consumers.
- Open the hood.

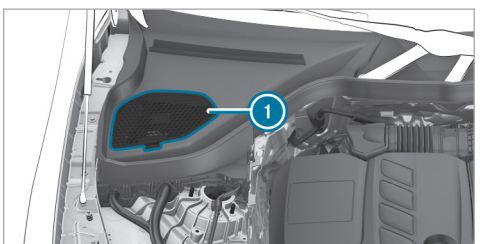

- Open cover (1) of the jump-start connection point.

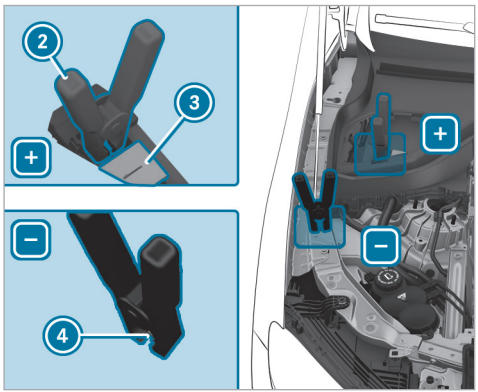

- Open cover (3) of positive contact (2) on the jump-start connection point.

Starting assistance

- Connect positive terminal (2) on your vehicle to positive terminal of the donor battery using the jumper cable. Always begin with positive clamp (2) on your own vehicle first.
- Start the engine of the donor vehicle and run it at idling speed.
- Connect the negative terminal of the donor battery to ground point (4) of your vehicle using the jumper cable. Begin with the donor battery first.
- Start the engine of your own vehicle.
- Let the engines run for several minutes.
- Before disconnecting the jumper cables, switch on an electrical consumer in your own vehicle, e.g. the rear window defroster or the lighting.

When the starting assistance procedure is complete:

- Remove the jumper cables from ground point (4) first and the negative terminal of the donor battery, then from positive contact (2) and the positive terminal of the donor battery. Begin each time with the contacts on your own vehicle first.
- Close cover (3) of positive terminal (2) after removing the jumper cables.
- Close cover (1).

Further information can be obtained at a qualified specialist workshop.

Charging

- Connect positive contact (2) on the vehicle to the positive terminal of the charger using the charging cable. Always begin with positive contact (2) on the vehicle.
- Connect the negative terminal of the charger and ground point (4) on the vehicle with the charging cable. Start with the charger.
- Start the charging process.

When the charging process is complete:

- Remove the charging cable from ground point (4) first and the negative terminal of the charger, then from positive contact (2) and the positive terminal of the charger. Begin each time with the contacts on the vehicle.

- ▶ After removing the charging cable, close cover ③ of positive contact ②.
- ▶ Close cover ①.

Further information can be obtained at a qualified specialist workshop.

Replacing the 12 V battery

- ▶ Observe the notes on the 12 V battery (→ page 528).

Mercedes-Benz recommends that you have the 12 V battery replaced at a qualified specialist workshop, e.g. at an authorized Mercedes-Benz Center.

Observe the following notes if you want to replace the battery yourself:

- Always replace a faulty battery with a battery that meets the specific vehicle requirements.

  The vehicle is equipped with an AGM (Absorbent Glass Mat) technology battery or a lithium-ion battery. Full vehicle functionality is guaranteed only with an AGM or lithium-ion battery. For safety reasons, Mercedes-Benz recommends that you use only batteries that have been tested and approved for your vehicle by Mercedes-Benz.
- Use detachable parts such as vent hoses, elbow fittings or terminal covers from the battery to be replaced.
- Make sure that the vent hose is always connected to the original opening on the side of the battery.

  Install any existing or supplied cell caps.

  Otherwise, gases or battery acid could escape.
- Make sure that detachable parts are reconnected in the same way.

Tow starting or towing away

Permitted towing methods (not plug-in hybrid)

! **NOTE** Damage from automatic braking

If one of the following functions is activated, the vehicle will brake automatically in certain situations:

- Active Brake Assist
- Active Distance Assist DISTRONIC
- HOLD function
- Active Parking Assist

To avoid damage to the vehicle, switch off these systems, e.g. when towing or using a car wash.

Mercedes-Benz recommends transporting your vehicle in the case of a breakdown, rather than towing it away.

For towing with both axles on the ground, use a tow rope or tow rod. Do not use tow bar systems.

! **NOTE** Damage to the vehicle due to towing away incorrectly

▶ Observe the instructions and notes on towing away.

Vehicles with rear-wheel drive

Permitted towing methods	
Both axles on the ground	Yes, for a maximum of 31 miles (50 km) at 31 mph (50 km/h)
Front axle raised	No
Rear axle raised	Yes, if the steering wheel is fixed in the center position with a steering wheel lock

4MATIC vehicles

Permitted towing methods	
Both axles on the ground	Yes, for a maximum of 31 miles (50 km) at 31 mph (50 km/h)
Front axle raised	No
Rear axle raised	No

Towing with a raised axle: towing should be performed by a towing company.

Towing the vehicle with both axles on the ground

▶ Observe the notes on the permitted towing methods.

▶ Make sure that the battery is connected and charged.

Observe the following points when the battery is discharged:

- the vehicle cannot be started.
- the electric parking brake cannot be released or applied
- **Vehicles with automatic transmission:** the transmission cannot be shifted to position N or P.

ⓘ **Vehicles with automatic transmission:** if the transmission cannot be shifted to position N or if the display does not show anything, transport the vehicle (→ page 537, 539). A towing vehicle with lifting equipment is required for vehicle transportation.

! **NOTE** Damage due to towing away at excessively high speeds or over long distances

The drivetrain could be damaged when towing at excessively high speeds or over long distances.

▶ A towing speed of 30 mph (50 km/h) must not be exceeded.

▶ A towing distance of 30 miles (50 km) must not be exceeded.

WARNING Risk of accident when towing a vehicle which is too heavy

If the vehicle to be tow-started or towed away is heavier than the permissible gross mass of your vehicle, the following situations can occur:

- The towing eye may become detached.
- The vehicle/trailer combination may swerve or rollover.

▶ Before tow-starting or towing away, check if the vehicle to be tow-started or towed away exceeds the permissible gross mass.

If a vehicle has to be tow-started or towed away, its permissible gross mass must not exceed the permissible gross mass of the towing vehicle.

▶ Information on the permissible gross mass of the vehicle can be found on the vehicle identification plate (→ page 690).

▶ **Vehicles with automatic transmission:** do not open the driver's door or front passenger door; the transmission otherwise automatically shifts to position P.

▶ Install the towing eye (→ page 540).

▶ Fasten the towing device.

NOTE Damage due to incorrect connection of the tow bar

▶ Only connect the tow rope or tow bar to the towing eyes.

▶ Deactivate the automatic locking mechanism (→ page 141).

▶ Do not activate the HOLD function.

▶ Deactivate the tow-away alarm (→ page 160).

▶ Deactivate Active Brake Assist (→ page 306).

▶ **Vehicles with automatic transmission:** shift to position N.

▶ Release the electric parking brake.

WARNING Risk of accident due to limited safety-related functions during the towing process

Safety-related functions are limited or no longer available in the following situations:

- The vehicle is switched off.
- The brake system or power steering system is malfunctioning.
- The energy supply or the on-board electrical system is malfunctioning.

When your vehicle is towed away, significantly more effort may be required to steer and brake than is normally required.

▶ Use a tow bar.

▶ Make sure that the steering wheel can move freely before towing the vehicle away.

! **NOTE** Damage due to excessive tractive power

If you pull away sharply, the tractive power may be too high and the vehicles could be damaged.

- Pull away slowly and smoothly.

Loading the vehicle for transportation (vehicles with AIRMATIC)

Requirements

- The vehicle is stationary.
- The vehicle is switched off.
- The driver's display is in the initial state with no menus open (→ page 349). Transportation is also possible when a warning message is visible.
- The 12 V battery is charged.

- Select Vehicle Transport.

ⓘ Noise certification mode is intended exclusively for the technical test organization. It restricts the drive power of the vehicle and must not be used in customer operation.

- If necessary, set the system language (→ page 400).
- Observe the notes on towing away (→ page 53).
- Connect the towing device to the towing eye in order to load the vehicle.
- Switch on the power supply (→ page 233).
- Shift the transmission to position N.

ⓘ The transmission may be locked in position P in the event of damage to the electrics. To shift to N, supply the on-board electrical system with power (→ page 49).

! **NOTE** Possible damage to the vehicle when loading or unloading

When loading or unloading, the vehicle must be raised to transport level.

If the transport settings are not shown or the Vehicle Not Ready for Loading message is displayed, the vehicle may not be loaded or unloaded.

- If required, raise the vehicle to transport level again.
- A vehicle that cannot be raised to transport level may not be loaded or unloaded using a ramp. Consult a qualified specialist workshop.



⚠ **WARNING** Risk of accident due to activated transport level

If the vehicle is raised to transport level, driving and driving safety systems have only limited availability and the view from the vehicle is restricted.

Driving safety is severely restricted and there is a risk of an accident!

- Do not use transport level in normal road operation.
- Only activate and use transport level to load the vehicle and when not on public roads.
- Ensure that no persons or obstacles are located in the area surrounding the vehicle.

Raising the vehicle to transport level

- Press the ⮌ button for at least five seconds.
- Immediately press and hold the OK button for at least one second.
  The For Transport Level Switch On Vehicle message will be displayed.
- Switch on the vehicle (→ page 234).
  The transport settings will be displayed.
- Swipe downward to select Transport Level and press OK.
  The vehicle will be raised and the Vehicle raising... Do not drive onto ramp yet message will be displayed for five seconds. The raising process can last up to 60 seconds and can be canceled with the ⮌ button.
- Do not switch off the vehicle during the raising process.

While the vehicle is being raised, you can maneuver at a maximum speed of 25 mph (40 km/h).



- Before loading the vehicle, wait until the transport level has been reached and the Transport Level status is shown.

ⓘ If the vehicle is raised to transport level, the transport settings will continue to be shown even after a restart. Operation of the driver's display will be restricted.

When the vehicle is at transport level, it will be lowered again in the following situations:

- When driving faster than 25 mph (40 km/h).
- The 12V battery is discharged.

The vehicle will be adjusted to the height of the last active level.

Transporting the vehicle

- Load the vehicle onto the transporter.
- Shift the transmission to position P.
- Use the electric parking brake to secure the vehicle against rolling away.
- Switch off the vehicle and the power supply.
- Only secure the vehicle by the wheels.

4MATIC vehicles

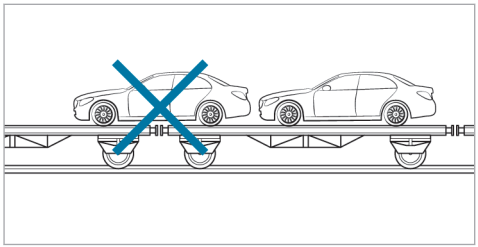

- Make sure that the front and rear axles come to rest on the same transportation vehicle.

! **NOTE** Damage to the drive train due to incorrect positioning of the vehicle

- Do not position the vehicle above the connection point of the transport vehicle.

Unloading the vehicle

- Make sure that the vehicle is raised to transport level before unloading (→ page 537, 539).

Lowering the vehicle after unloading

- Switch on the power supply.
- Start the vehicle.
- In the transport settings, swipe up to select the Standard Level and press OK. The vehicle will be adjusted to the height of the last active level and the Lowering Vehicle... message will be displayed.
- After the vehicle has been lowered, press the button for at least two seconds. The transport settings will close.

Loading the vehicle for transportation (vehicles without AIRMATIC)

- Observe the notes on towing away.
- Connect the towing device to the towing eye in order to load the vehicle.
- Shift the automatic transmission to position N.

ⓘ The automatic transmission may be locked in position P in the event of damage to the electrics. To shift to N, supply the on-board electrical system with power (→ page 49).

- Load the vehicle onto the transporter.
- Shift the automatic transmission to position P.
- Use the electric parking brake to secure the vehicle against rolling away.
- Only secure the vehicle by the wheels.

4MATIC vehicles/vehicles with automatic transmission

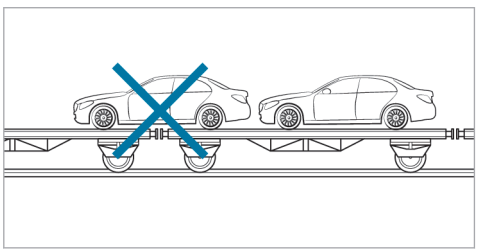

- Make sure that the front and rear axles come to rest on the same transportation vehicle.

! NOTE Damage to the drive train due to incorrect positioning of the vehicle

- Do not position the vehicle above the connection point of the transport vehicle.

Towing eye storage location

Not plug-in hybrid

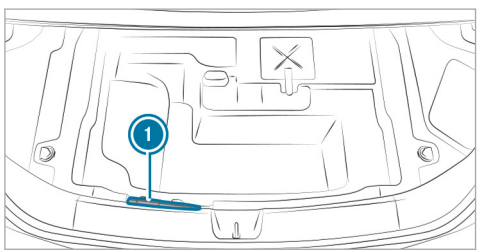

Towing eye (1) is located under the trunk floor in the loading sill.

ⓘ Depending on the vehicle version, the towing eye may be located in a different position in the trunk.

Installing and removing the towing eye

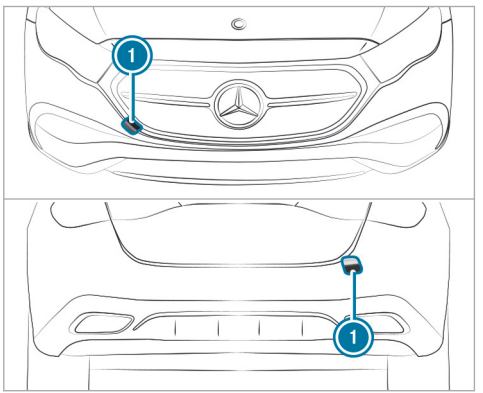

- Press the mark on cover (1) inwards and remove.
- Screw in the towing eye clockwise as far as it will go and tighten.
- After removing the towing eye, engage cover (1) in the bumper.

! NOTE Damage to the vehicle due to incorrect use of the towing eye or trailer hitch

When a towing eye or trailer hitch is used to recover a vehicle, the vehicle may be damaged in the process.

- Only use the towing eye or trailer hitch to tow away or tow start the vehicle.
- Do not use the towing eye or trailer hitch to tow the vehicle during recovery.

Tow-starting the vehicle

Vehicles with automatic transmission

NOTE Damage to the automatic transmission due to tow starting

The automatic transmission may be damaged in the process of tow starting vehicles with automatic transmission.

- Vehicles with automatic transmission must not be tow started.

- Vehicles with automatic transmissions must not be tow-started.

Electrical fuses

Notes on electrical fuses

WARNING Risk of accident and injury due to overloaded lines

If you manipulate or bridge a faulty fuse or if you replace it with a fuse with a higher amperage, the electric line could be overloaded. This could result in a fire.

- Always replace faulty fuses with specified new fuses containing the correct amperage.

NOTE Damage due to incorrect fuses

Using incorrect fuses can result in damage to electrical components or systems or their functions being considerably restricted.

- Use only fuses approved for Mercedes-Benz with the respective specified fuse rating.

Blown fuses must be replaced with fuses of the same rating, which you can recognize by the color and the label. The fuse ratings and further information to be observed can be found in the fuse assignment diagram.

Fuse assignment diagram: on the fuse box in the trunk (→ page 544).

NOTE Damage or malfunctions caused by moisture

Moisture may cause damage to the electrical system or cause it to malfunction.

- When the fuse box is open, make sure that no moisture can enter the fuse box.
- When closing the fuse box, make sure that the seal of the lid is positioned correctly on the fuse box.

If the newly inserted fuse also blows, have the cause traced and rectified at a qualified specialist workshop.

Ensure the following before replacing a fuse:

- The vehicle is secured against rolling away.
- All electrical consumers are switched off.
- The vehicle is switched off.

The electrical fuses are located in various fuse boxes:

- Fuse box on the driver's side of the engine compartment (→ page 542)

- Fuse box on the driver's side of the cockpit (→ page 543)
- Fuse box in the front passenger footwell (→ page 543)
- Fuse box in the trunk (→ page 544)

Opening and closing the fuse box in the engine compartment

Requirements

- A dry cloth and a screwdriver are available.

Observe the notes on electrical fuses (→ page 51).

Opening

WARNING Risk of injury from using the windshield wipers when the hood is open

If the windshield wipers start moving when the hood is open, you could be trapped by the wiper linkage.

- Always switch off the windshield wipers and the vehicle first if you need to open the hood.

▶ Open the hood (→ page 506).

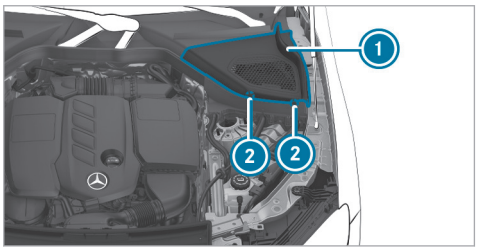

▶ Turn both retaining clips 2 on cover 1 on the driver's side a quarter-turn clockwise.

▶ Fold cover 1 upwards.

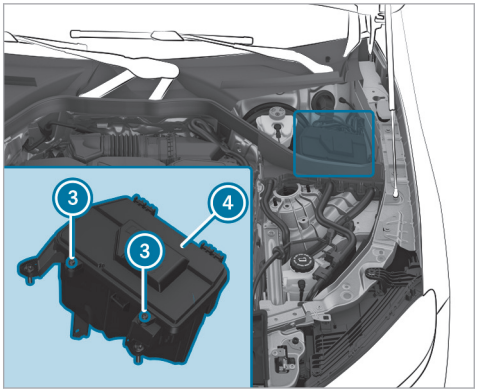

▶ Remove any existing moisture from the fuse box using a dry cloth.

▶ Loosen screws 3 and remove fuse box lid 4 from the top.

Closing

▶ Check whether the seal is positioned correctly in lid 4.

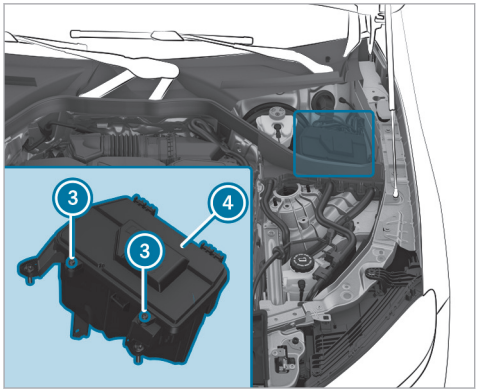

- Insert lid (4) into the bracket at the rear of the fuse box.
- Fold down lid (4) of the fuse box and tighten screws (3).

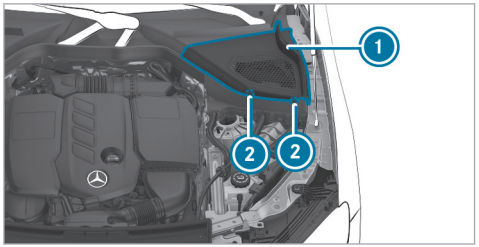

- Fold down cover (1).
- Turn both retaining clips (2) on cover (1) a quarter-turn counter-clockwise.
- Close the hood.

Opening and closing the fuse box in the cockpit

Requirements

- Observe the notes on electrical fuses (→ page 51).

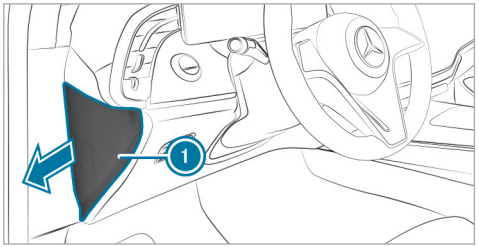

The fuse box is under a cover on the side of the driver's side of the cockpit.

- Open cover (1) in the direction of the arrow and remove it.

Mercedes-Benz recommends you have the fuse box opened at an authorized Mercedes-Benz Center.

Opening and closing the fuse box in the front passenger footwell

Requirements

Observe the notes on electrical fuses (→ page 51).

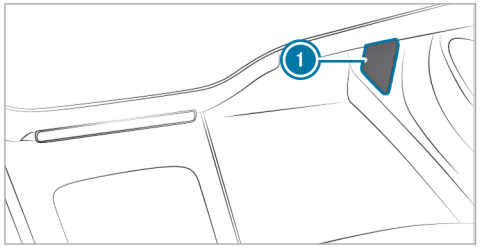

- **To open:** fold out and remove cover (1).
- **To close:** reinsert cover (1).

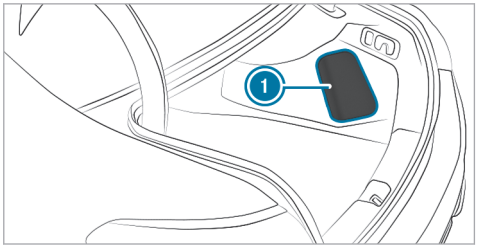

- Open cover (1).

Opening and closing the fuse box in the trunk

Requirements
Observe the notes on electrical fuses
(→ page 51).

Notes on noise or unusual handling characteristics

Make sure there are no vibrations, noises or unusual handling characteristics when the vehicle is in motion. This may indicate that the wheels or tires are damaged. Hidden tire damage could also be causing the unusual handling characteristics.

If you suspect that a tire is defective, reduce your speed immediately and have the tires and wheels checked at a qualified specialist workshop.

Notes on regularly inspecting wheels and tires

WARNING Risk of injury through damaged tires

Damaged tires can cause tire pressure loss.

- Check the tires regularly for signs of damage and replace any damaged tires immediately.

WARNING Risk of hydroplaning due to insufficient tire tread

Insufficient tire tread will result in reduced tire grip.

In heavy rain or slush the risk of hydroplaning is increased, in particular where speed is not adapted to suit the conditions.

- Thus, you should regularly check the tread depth and the condition of the tread across the entire width of all tires.

Minimum tread depth for:

- Summer tires: ⅛ in (3 mm)
- M+S tires: ⅙in (4 mm)

- For safety reasons, replace the tires before the legally-prescribed limit for the minimum tread depth is reached.

Carry out the following checks on all wheels regularly, at least once a month or as required, for example, prior to a long journey or driving off-road:

- Check the tire pressure (→ page 547).
- Visually inspect wheels and tires for damage.
- Check the valve caps.
- Visually inspect the tire tread depth and the tire contact surface across the entire width.

  The minimum tread depth for summer tires is ⅛ in (3 mm) and for winter tires ⅙ in (4 mm).

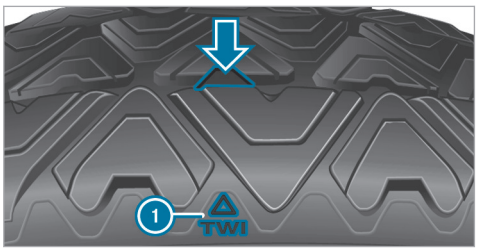

Six marks (1) show where the bar indicators (arrow) are integrated into the tire tread. They are visible once a tire tread depth of approximately 1/16 in (1.6 mm) has been reached.

Notes on snow chains

WARNING Risk of accident due to incorrectly installed snow chains

If you have installed snow chains on the front wheels, they may drag against the vehicle body or chassis components.

- Never install snow chains on the front wheels.
- Only install snow chains on the rear wheels in pairs.

NOTE Damage to components of the vehicle body or chassis due to mounted snow chains

If you mount snow chains to the front wheels of 4MATIC vehicles, you may damage components of the vehicle body or chassis.

- Only mount snow chains to the rear wheels of 4MATIC vehicles.

NOTE Damage to wheel trims due to snow chains being installed

If you install snow chains on aluminum wheels you could damage the wheel trims.

- Remove the wheel trims from the aluminum wheels before installing snow chains.

Observe the following notes when using snow chains:

- Snow chains are only permissible for certain wheel/tire combinations. You can obtain information about this from an authorized Mercedes-Benz Service Center.
- For safety reasons, only use snow chains that have been specifically approved for your vehicle by Mercedes-Benz, or snow chains with the same quality standard.
- Comply with the installation instructions of the snow chain manufacturer.
- If snow chains are installed, the maximum permissible speed is 30 mph (50 km/h).
- **Vehicles with Active Parking Assist:** do not use Active Parking Assist when snow chains are installed.

ⓘ You can deactivate ESP® to pull away (→ page 276). This allows the wheels to spin, achieving an increased driving force.

Activating or deactivating snow chain mode

Multimedia system:



- Activate or deactivate Snow Chain Mode.

When the function is active, the vehicle behaves as if snow chains were installed.

Additionally, parts of the driving and driving safety systems are not available when snow chain mode is active.

Tire pressure

Notes on tire pressure

WARNING Risk of accident due to insufficient or excessive tire pressure

Underinflated or overinflated tires pose in particular the following risks:

- The tires can burst.
- The tires can wear excessively and/or unevenly.
- The driving characteristics as well as the steering and braking characteristics may be greatly impaired.

▶ Comply with the recommended tire pressures and check the tire pressure of all tires, including the spare wheel, regularly:

- Monthly
- When the load changes
- Before embarking on a longer journey
- If operating conditions change, e.g. off-road driving

▶ Adjust the tire pressure, if necessary.

Tire pressure which is too high or too low can:

- Shorten the service life of the tires.
- Cause increased tire damage.
- Adversely affect driving characteristics and thus driving safety, e.g. due to hydroplaning.

WARNING Risk of accident due to too low a tire pressure

Tires with pressure that is too low can overheat and burst as a consequence.

In addition, they also suffer from irregular wear, which can significantly impair the braking properties and the handling characteristics.

▶ Avoid excessively low tire pressure.

Tire pressure which is too low can cause:

- Tire defects as a result of overheating
- Impaired handling characteristics
- Irregular wear
- Increased fuel consumption

WARNING Risk of accident due to too high a tire pressure

Tires with excessively high pressure can burst.

In addition, they also suffer from irregular wear, which can significantly impair the braking properties and the handling characteristics.

▶ Avoid excessively high tire pressures.

Tire pressure which is too high can cause:

- Increased braking distance
- Impaired handling characteristics
- Irregular wear
- Impaired driving comfort
- Susceptibility to damage

WARNING Risk of accident due to repeated pressure drop in the tires

The wheels, valves or tires could be damaged.

Too low a tire pressure can lead to the tires bursting.

- ▶ Examine the tires for foreign objects.
- ▶ Check whether the tire has a puncture or the valve has a leak.
- ▶ If you are unable to rectify the damage, contact a qualified specialist workshop.

You can find information on the recommended tire pressures for the vehicle's factory-installed tires on the following labels:

- Tire and Loading Information placard on the B-pillar of your vehicle (→ page 553).
- Tire pressure table on the inside of the fuel filler flap (→ page 548).

Observe the maximum tire pressure (→ page 559).

Use a suitable pressure gauge to check the tire pressure. The outer appearance of a tire does not permit any reliable conclusion about the tire pressure.

Only correct tire pressure when the tires are cold. Conditions for cold tires:

- The vehicle has been parked with the tires out of direct sunlight for at least three hours.
- The vehicle has traveled less than 1 mile (1.6 km).

The vehicle's tires heat up when driving. As the temperature of the tires increases, so too does the tire pressure.

The tire pressure recommended for increased load/speed in the tire pressure table can affect the ride comfort.

WARNING Risk of accident due to unsuitable accessories on tire valves

If you mount unsuitable accessories onto tire valves, the tire valves may be overloaded and malfunction, which can cause tire pressure loss.

- ▶ Only screw standard valve caps or valve caps specifically approved by Mercedes-Benz for your vehicle onto the tire valve.

Tire pressure table

The tire pressure table is on the inside of the fuel filler flap.

ⓘ The data shown in the images is example data.

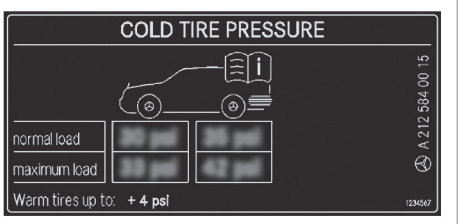

The tire pressure table shows the recommended tire pressure for all tires approved for this vehicle. The recommended tire pressure apply for cold

tires under various operating conditions, i.e. loading and/or speed of the vehicle.

If one or more tire sizes precede a tire pressure, the following tire pressure information is only valid for those tire sizes and their respective load condition.

The load conditions "partially laden" and "fully laden" are defined in the table for different numbers of passengers and amounts of luggage. The actual number of seats may differ from this.

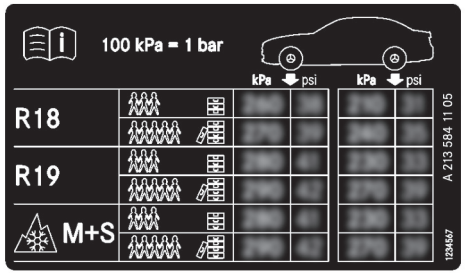

Some tire pressure tables only show the rim diameter instead of the complete tire size, e.g. **R18**. The rim diameter is part of the tire size and can be found on the tire side wall (⟶ page 560).

- Tire and Loading Information placard (⟶ page 553)
- Maximum tire pressures (⟶ page 559)

Checking the tire pressure manually

- Read the tire pressure recommended for the current operating conditions from the tire and loading information placard or the tire pressure table. Observe the notes on tire pressure.
- Remove the valve cap of the tire to be checked.
- Press the tire pressure gauge securely onto the valve.
- Read the tire pressure.
- If the tire pressure is lower than the recommended value, increase the tire pressure to the recommended value.
- If the tire pressure is higher than the recommended value, release air. To do so, press down the metal pin in the valve, e.g. using the tip of a pen. Then check the tire pressure again using the tire pressure gauge.
- Screw the valve cap onto the valve.

Tire pressure monitoring system

Function of the tire pressure monitor

DANGER Risk of accident due to incorrect tire pressure

Each tire, including the spare (if provided), should be checked monthly when cold and inflated to the inflation pressure recommended by the vehicle manufacturer on the vehicle placard or tire inflation pressure label. (If your vehicle has tires of a different size than the size indicated on the vehicle placard or tire inflation pressure label, you should determine the proper tire inflation pressure for those tires.)

As an added safety feature, your vehicle has been equipped with a tire pressure monitoring system (TPMS) that illuminates a low tire pressure telltale when one or more of your tires is significantly under-inflated. Accordingly, when the low tire pressure telltale illuminates, you should stop and check your tires as soon as possible, and inflate them to the proper pressure. Driving on a significantly under-inflated tire causes the tire to overheat and can lead to tire failure. Under-inflation also reduces fuel efficiency and tire tread life, and may affect the vehicle's handling and stopping ability. Please note that the TPMS is not a substitute for proper tire maintenance, and it is the driver's responsibility to maintain correct tire pressure, even if under-inflation has not reached the level to trigger illumination of the TPMS low tire pressure telltale.

Your vehicle has also been equipped with a TPMS malfunction indicator to indicate when the system is not operating properly. The TPMS malfunction indicator is combined with the low tire pressure telltale. When the system detects a malfunction, the telltale will flash for approximately one minute and then remain continuously illuminated. This sequence will continue upon subsequent vehicle start-ups as long as the malfunction exists.

When the malfunction indicator is illuminated, the system may not be able to detect or signal low tire pressure as intended. TPMS malfunctions may occur for a variety of reasons, including the installation of replacement or alternate tires or wheels on the vehicle that prevent the TPMS from functioning properly.

▶

The system uses a tire pressure sensor to check the pressure and temperature of the tires fitted on the vehicle.

The tire pressure and tire temperature appear on the driver's display.

If there is a substantial pressure loss or if the tire temperature is excessive, you will be warned with display messages (→ page 770) or the (!) warning lamp on the driver's display (→ page 796).

The tire pressure monitor is only an aid. It is the driver's responsibility to set the tire pressure to the recommended cold tire pressure suitable for the operating situation.

In most cases, the tire pressure monitor will automatically update the new reference values after you have changed the tire pressure. You can, however, also update the reference values by

restarting the tire pressure monitor manually (→ page 551).

System limits

The system may be impaired or may not function particularly in the following situations:

- incorrect reference values were taught in
- sudden pressure loss caused by a foreign object penetrating the tire, for example
- there is a malfunction caused by another radio signal source

Checking the tire pressure with the tire pressure monitoring system

Requirements

- The vehicle is switched on.

Driver's display:

↴ ⌂ ▸▸ Service

▶ Press OK to confirm.

One of the following displays appears:

- Current tire pressure of each wheel:



- Tire pressure displayed after driving for a few minutes.: current values are not yet known to the system. The pressure/temperature values for each tire will be displayed as soon as they are known to the system.
- Tire Pressure Monitor Active: the teach-in process of the system is not yet complete. The tire pressures are already being monitored.

▶ Compare the current tire pressure with the recommended tire pressure for the current operating condition (→ page 548). Additionally, observe the notes on cold tires (→ page 547).

ⓘ The values displayed in the driver's display may deviate from those of the tire pressure gauge as they refer to sea level. At high elevations, the tire pressure values indicated by a tire pressure gauge are higher than those shown in the driver's display.

Restarting the tire pressure monitoring system

Requirements

- The recommended tire pressure is correctly set for the respective operating status on each of the four wheels (→ page 547).

Restart the tire pressure monitoring system in the following situations:

- The tire pressure has changed.
- The wheels or tires have been changed or newly installed.

Driver's display:

↴ ⌂ ▸▸ Service

▶ Select Tire Pressure and confirm with OK.

- ▶ Swipe downwards on Touch Control on the steering wheel.
  The Use current pressures as new reference values? message is shown in the driver's display.
- ▶ Select Yes and confirm the restart with OK.
  The Tire Pressure Monitor Restarted message is shown in the driver's display.

  Current warning messages are deleted and the yellow (!) warning lamp goes out.

  After you have been driving for a few minutes, the system checks whether the current tire pressures are within the specified range. The current tire pressures are then accepted as reference values and monitored.

  If the tire pressure levels are not within the specified range, the Please Correct Tire Pressure message appears.

Tire pressure loss warning system

Function of the tire pressure loss warning system

The tire pressure loss warning system warns the driver by means of display messages when there is a severe tire pressure loss.

System limits

The system may be impaired or may not function particularly in the following situations:

- incorrect reference values were taught in
- sudden pressure loss caused by a foreign object penetrating the tire, for example
- an even pressure loss on more than one tire occurs

The system has a restricted or delayed function particularly in the following situations:

- poor ground conditions, e.g. snow or gravel
- driving with snow chains
- when adopting a very sporty driving style with high cornering speeds or sudden acceleration
- driving with a high load

The tire pressure loss warning system is only an aid. It is the driver's responsibility to set the tire pressure to the recommended cold tire pressure suitable for the operating situation and to check it.

Be sure to also observe the following further related subjects:

- Notes on tire pressure (→ page 547)
- Display messages about the tires (→ page 770)

Restarting the tire pressure loss warning system

Requirements

- The recommended tire pressure is correctly set for the respective operating condition on each of the four wheels (→ page 547).

Restart the tire pressure loss warning system in the following situations:

- The tire pressure has changed.
- The wheels or tires have been changed or newly installed.

Driver's display:

→ ⌂ ›› Service

- Select Tire Pressure and confirm with OK. The Run Flat Indicator Active message is shown on the driver's display.
- To initiate a restart, press OK on the steering wheel. The Are the current pressure values OK? message is shown on the driver's display.
- Select Yes.
- To confirm restart, press OK on the steering wheel. The Run Flat Indicator Restarted message is shown on the driver's display.

Be sure to also observe the following further related subjects:

- Notes on tire pressure (→ page 547)

Loading the vehicle

Notes on the Tire and Loading Information placard

⚠ WARNING Risk of accident from overloaded tires

Overloaded tires may overheat and burst as a consequence. Overloaded tires can also impair the steering and handling characteristics and lead to brake failure.

- Observe the load rating of the tires.
- The load rating must be at least half the permissible axle load of the vehicle.
- Never overload the tires by exceeding the maximum load.

The Tire and Loading Information placard is on the B-pillar on the driver's side of the vehicle.

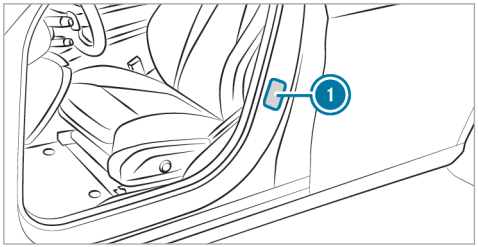

1 Tire and Loading Information placard

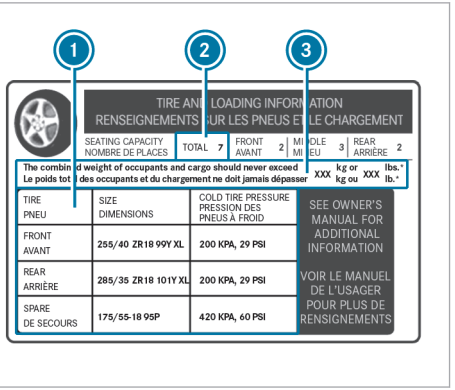

ⓘ The data shown in the illustration is example data.

The Tire and Loading Information placard shows the following information:

- Maximum number of seats (2) according to the maximum number of people permitted to travel in the vehicle.
- Maximum permissible load (3) comprises the gross weight of all vehicle occupants, load and luggage.
- Recommended tire pressures (1) for cold tires. The recommended tire pressures are valid for the maximum permissible load and up to the maximum permissible vehicle speed.

Please also note:

- Information on permissible weights and loads on the vehicle identification plate (→ page 690).
- Information on tire pressure in the tire pressure table (→ page 548).

Steps for Determining Correct Load Limit

The following steps have been developed as required of all manufacturers under Title 49, Code of U.S. Federal Regulations, Part 575, pursuant to the "National Traffic and Motor Vehicle Safety Act of 1966".

▶ **(1):** Locate the statement “The combined weight of occupants and cargo should never exceed XXX kg or XXX lbs.” on your vehicle's placard.

▶ **(2):** Determine the combined weight of the driver and passengers that will be riding in your vehicle.

▶ **(3):** Subtract the combined weight of the driver and passengers from XXX kg or XXX lbs.

▶ **(4):** The resulting figure equals the available amount of cargo and luggage load capacity. For example, if the "XXX" amount equals 1,400 lbs. and there will be five 150 lb passengers in your vehicle, the amount of available cargo and luggage load capacity is 650 lbs. (1,400 - 750 (5 x 150) = 650 lbs.)

▶ **(5):** Determine the combined weight of luggage and cargo being loaded on the vehicle. That weight may not safely exceed the available cargo and luggage load capacity calculated in Step 4.

▶ **(6):** If your vehicle will be towing a trailer, load from your trailer will be transferred to your vehicle. Consult this manual to determine how this reduces the available cargo and luggage load capacity of your vehicle.

ⓘ Not all vehicles are permitted to tow a trailer. Towing a trailer is only permitted if a trailer-hitch is installed. Please consult an authorized Mercedes-Benz dealer if you have any questions about towing a trailer with your vehicle.

Even if you have calculated the total load carefully, you should still make sure that the maximum permissible gross weight and the maximum gross axle weight rating of your vehicle are not exceeded. Details can be found on the vehicle identification plate.

▶ Have your loaded vehicle – including driver, occupants and load – weighed on a vehicle weighbridge.
The measured values may not exceed the maximum permissible values stated on the vehicle identification plate.

Calculation example for determining the maximum load

The following table shows examples of how to calculate total and load capacities with varying seating configurations and different numbers and sizes of occupants. The following examples use a maximum load of 1500 lbs (680 kg). **This is for illustration purposes only.** Make sure you are using the actual load limit for your vehicle stated on your vehicle's Tire and Loading Information placard (→ page 553).

The higher the weight of all the occupants, the smaller the maximum load for luggage.

Step 1

	Example 1	Example 2
Combined maximum weight of occupants and load (data from the Tire and Loading Information placard)	1500 lbs (680 kg)	1500 lbs (680 kg)

Step 2

	Example 1	Example 2
Number of people in the vehicle (driver and occupants)	5	1
Distribution of the occupants	Front: 2 Rear: 3	Front: 1
Weight of occupants	Occupant 1: 150 lbs (68 kg) Occupant 2: 180 lbs (82 kg) Occupant 3: 160 lbs (73 kg) Occupant 4: 140 lbs (63 kg) Occupant 5: 120 lbs (54 kg)	Occupant 1: 200 lbs (91 kg)
Total weight of all occupants	750 lbs (340 kg)	200 lbs (91 kg)

Step 3

	Example 1	Example 2
Permissible load (maximum gross vehicle weight rating from the Tire and Loading Information placard minus the gross weight of all occupants)	1500 lbs (680 kg) - 750 lbs (340 kg) = 750 lbs (340 kg)	1500 lbs (680 kg) - 200 lbs (91 kg) = 1300 lbs (589 kg)

Tire labeling

Overview of tire labeling

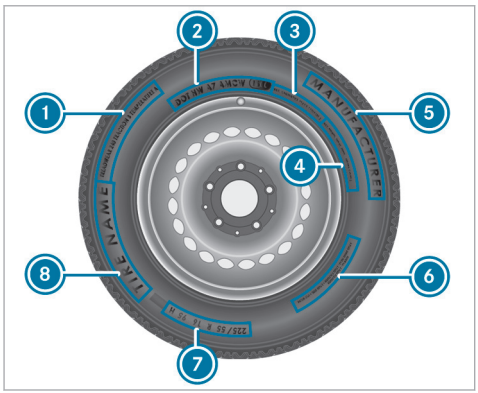

1. Uniform Tire Quality Grading Standards
2. DOT (Department of Transportation), (TIN) Tire Identification Number
3. Maximum tire load (→ page 559)
4. Maximum tire pressure (→ page 559)
5. Manufacturer
6. Tire characteristics (→ page 560)
7. Tire size designation, load-bearing capacity, speed rating and load index (→ page 560)
8. Tire name

ⓘ The data shown in the illustration is example data.

Tire Quality Grading

In accordance with the US Department of Transportation's "Uniform tire Quality Grading Standards", tire manufacturers are required to grade their tires on the basis of the following three performance factors:

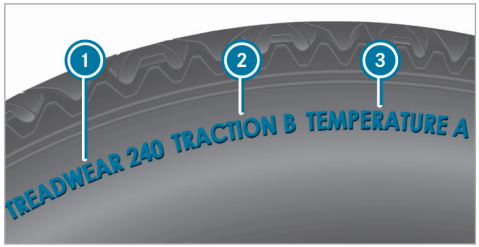

1. Tread wear grade
2. Traction grade
3. Temperature grade

ⓘ The data shown in the illustration is example data.

ⓘ The classification is not legally stipulated for Canada, but it is generally stated.

Tread wear grade

The treadwear grade is a comparative rating based on the wear rate of the tire when tested under controlled conditions on a specified government test course. For example, a tire graded 150 would wear one and one-half (1\1/2\) times as

well on the government course as a tire graded 100.

The relative performance of tires depends upon the actual conditions of their use, however, and may depart significantly from the norm due to variations in driving habits, service practices and differences in road characteristics and climate.

Traction grade

DANGER Risk of accident due to inadequate traction

The traction grade assigned to this tire is based on straight-ahead braking traction tests.

- Always adapt your driving style and drive at a speed to suit the prevailing traffic and weather conditions.

NOTE Damage to the drivetrain from wheelspin

- Avoid wheelspin.

The traction grades, from highest to lowest, are AA, A, B, and C. Those grades represent the tire's ability to stop on wet pavement as measured under controlled conditions on specified government test surfaces of asphalt and concrete. A tire marked C may have poor traction performance.

Temperature grade

WARNING Risk of accident from tire overheating and tire failure

Excessive speed, underinflation, or excessive loading, either separately or in combination, can cause excessive heat build-up and possible tire failure.

- Observe the recommended tire pressure.
- Regularly check the pressure of all the tires.
- Adjust the tire pressure, if necessary.

The temperature grades are A (the highest), B, and C, representing the tire's resistance to the generation of heat and its ability to dissipate heat when tested under controlled conditions on a specified indoor laboratory test wheel. Sustained high temperature can cause the material of the tire to degenerate and reduce tire life, and excessive temperature can lead to sudden tire failure. The grade C corresponds to a level of performance which all passenger car tires must meet under the Federal Motor Safety Standard No. 109. Grades B and A represent higher levels of performance on the laboratory test wheel than the minimum required by law.

DOT, Tire Identification Number (TIN)

US tire regulations stipulate that every tire manufacturer or retreader must imprint a TIN in or on the side wall of each tire produced.



ⓘ The data shown in the illustration is example data.

The TIN is a unique identification number to identify tires and comprises the following:

- **DOT (Department of Transportation):** tire symbol marks (1) indicating that the tire complies with the requirements of the US Department of Transportation.
- **Manufacturer identification code:** manufacturer identification code (2) contains details of the tire manufacturer. New tires have a code with two symbols. Retreaded tires have a code with four symbols. Further information on retreaded tires (→ page 564).
- **Tire size:** identifier (3) describes the tire size.
- **Tire type code:** tire type code (4) can be used by the manufacturer as a code to describe specific characteristics of the tire.
- **Manufacturing date:** manufacturing date (5) provides information about the age of a tire. The 1st and 2nd positions represent the calendar week and the 3rd and 4th positions state the year of manufacture (e.g. "3208" represents the 32nd week of 2008).

Information on the maximum tire load

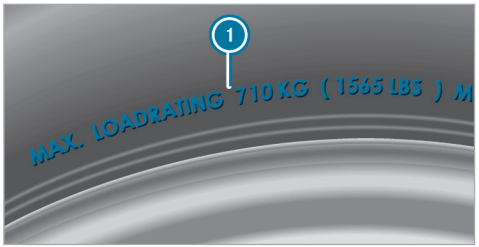

ⓘ The data shown in the illustration is example data.

Maximum tire load (1) is the maximum permissible weight for which the tire is approved.

Do not overload the tires by exceeding the specified load limit. The maximum permissible load can be found on the vehicle's Tire and Loading Information placard on the B-pillar on the driver's side (→ page 553).

Specifications for maximum tire pressure

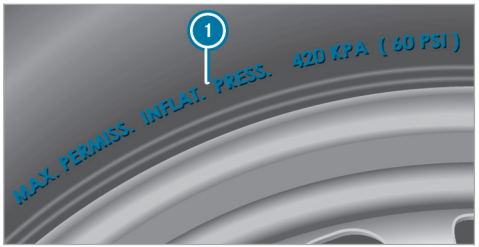

ⓘ The data shown in the illustration is example data.

Never exceed maximum tire pressure (1) specified for the tire. Always observe the recommended tire pressure for your vehicle when adjusting the tire pressure (→ page 548).

Information on tire characteristics

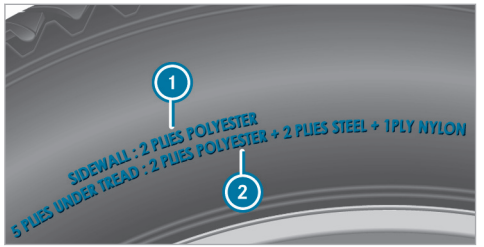

ⓘ The data shown in the illustration is example data.

This information describes the type of tire cord and the number of layers in side wall ① and under tire tread ②.

Tire size designation, load-bearing capacity, speed rating and load index

⚠ **WARNING** Risk of injury through exceeding the specified tire load-bearing capacity or the permissible speed rating

Exceeding the specified tire load rating or the permissible speed rating may lead to tire damage and to the tires bursting.

- ▶ Therefore, only use tire types and sizes approved for your vehicle model.
- ▶ Observe the tire load rating and speed rating required for your vehicle.

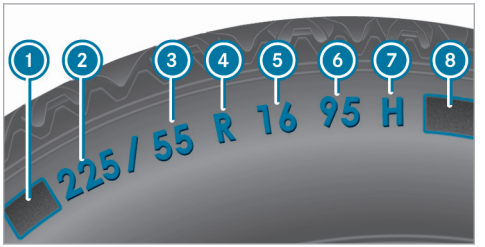

① First letter(s)
② Nominal tire width in millimeters
③ Aspect ratio in %
④ Tire code
⑤ Rim diameter
⑥ Load-bearing index
⑦ Speed rating
⑧ Load index

ⓘ The data shown in the illustration is example data.

Information about reading tire data can be obtained from any qualified specialist workshop.

First letter(s) (1):
- Without: passenger vehicle tires according to European manufacturing standards.
- "P": passenger vehicle tires according to US manufacturing standards.
- "LT": light truck tires according to US manufacturing standards.
- "T": compact emergency spare wheels with high tire pressure that are only designed for temporary use in an emergency.

Aspect ratio (3):
Ratio between tire height and tire width in percent (tire height divided by tire width).

Tire code (4) (tire type):
- "R" radial tire
- "D": bias ply tire
- "B": bias belted tires
- "ZR": radial tire with a maximum speed above 149 mph (240 km/h) (optional)

Rim diameter (5):
The diameter of the bead seat (not the diameter of the rim flange). The rim diameter is specified in inches (in).

Load-bearing index (6):
Numerical code that specifies the maximum load-bearing capacity of a tire (e.g. "91" corresponds to 1,356 lbs (615 kg)).

The load-bearing capacity of the tire must be at least half the gross axle weight rating of your vehicle. Do not overload the tires by exceeding the specified load limit.

See also:
- Maximum permissible load on the Tire and Loading Information placard (→ page 553)
- Maximum tire load (→ page 559)
- Load index

Speed rating (7):
Specifies the approved maximum speed of the tire.

ⓘ An electronic speed limiter prevents your vehicle from exceeding a speed of 130 mph (210 km/h).

Make sure that your tires have the required speed rating. You can obtain information on the required speed rating from an authorized Mercedes-Benz Center.

Summer tires

Index	Speed rating
Q	up to 100 mph (160 km/h)
R	up to 106 mph (170 km/h)
S	up to 112 mph (180 km/h)
T	up to 118 mph (190 km/h)
H	up to 130 mph (210 km/h)
V	up to 149 mph (240 km/h)
W	up to 168 mph (270 km/h)
Y	up to 186 mph (300 km/h)

Index	Speed rating
ZR...Y[1]	up to 186 mph (300 km/h)
ZR...(..Y)[1]	over 186 mph (300 km/h)
ZR[1]	over 149 mph (240 km/h)

- Specifying the speed rating as the "ZR" index in tire code (4) is optional for tires up to 186 mph (300 km/h).
- If your tire code (4) includes "ZR" and there is no speed rating (7), find out what the maximum speed is from the tire manufacturer.
- If load-bearing index (6) and speed rating (7) are in brackets, the maximum speed rating of your tire is above 186 mph (300 km/h). To find out the maximum speed, ask the tire manufacturer.

All-weather tires and winter tires

Index	Speed rating
Q M+S[2]	up to 100 mph (160 km/h)
T M+S[2]	up to 118 mph (190 km/h)
H M+S[2]	up to 130 mph (210 km/h)
V M+S[2]	up to 149 mph (240 km/h)

Winter tires bear the snowflake symbol and fulfill the requirements of the Rubber Manufacturers Association (RMA) and the Rubber Association of Canada (RAC) regarding the tire traction on snow.

Load index (8):

- No specification given: standard load (SL) tire
- "XL" or "Extra Load": extra load tire or reinforced tire
- "Light Load": light load tire
- "C", "D", "E": a load range that depends on the maximum load that the tire can carry at a certain pressure

Definition of terms for tires and loading

Tire structure and characteristics: describes the number of layers or the number of rubber-coated belts in the tire contact surface and the tire wall. These are made of steel, nylon, polyester and other materials.

Bar: metric unit for tire pressure. 14.5038 pounds per square inch (psi) and 100 kilopascal (kPa) is the equivalent of one bar.

DOT (Department of Transportation): DOT-marked tires fulfill the requirements of the U.S. Department of Transportation.

Average weight of the vehicle occupants: the number of vehicle occupants for which the vehicle is designed, multiplied by 150 lb (68 kg).

Uniform Tire Quality Grading Standards: a uniform standard to grade the quality of tires with regard

1 "ZR" stated in the tire code.
2 Or "M+S " for winter tires.

to tread quality, tire traction and temperature characteristics. The quality grading assessment is made by the manufacturer following specifications from the U.S. government. The quality grade of a tire is printed on the side wall of the tire.

Recommended tire pressure: the recommended tire pressure is the tire pressure specified for the tires mounted on the vehicle at the factory.

The tire and information placard contains the recommended tire pressure for cold tires, the maximum permissible load and the maximum permissible vehicle speed.

The tire pressure table contains the recommended tire pressure for cold tires under various operating conditions, i.e. loading and/or speed of the vehicle.

Increased vehicle weight due to optional equipment: the combined weight of all standard and optional equipment available for the vehicle, regardless of whether it is actually installed on the vehicle or not.

Rim: the part of the wheel on which the tire is installed.

GAWR (Gross Axle Weight Rating): the GAWR is the maximum gross axle weight rating. The actual load on an axle must never exceed the gross axle weight rating. The gross axle weight rating can be found on the vehicle identification plate on the B-pillar on the driver's side.

Speed rating: the speed rating is part of the tire identification. It specifies the speed range for which a tire is approved.

GVW (Gross Vehicle Weight): the gross vehicle weight comprises the weight of the vehicle including fuel, tools, the spare wheel, any accessories installed, occupants, luggage and the trailer noseweight, if applicable. The gross vehicle weight must not exceed the gross vehicle weight rating GVWR as specified on the vehicle identification plate on the B-pillar on the driver's side.

GVWR (Gross Vehicle Weight Rating): the GVWR is the maximum permitted gross weight of the fully laden vehicle (weight of the vehicle including all accessories, occupants, fuel, luggage and the trailer drawbar noseweight if applicable). The gross vehicle weight rating is specified on the vehicle identification plate on the B-pillar on the driver's side.

Maximum weight of the laden vehicle: the maximum weight is the sum of the curb weight of the vehicle, the weight of the accessories, the maximum load and the weight of optional equipment installed at the factory.

Kilopascal (kPa): metric unit for tire pressure. 6.9 kPa corresponds to 1 psi. Another unit for tire pressure is bar. 100 kilopascal (kPa) equals 1 bar.

Load index: in addition to the load-bearing index, the load index may also be printed on the side wall of the tire. This specifies the load-bearing capacity of the tire more precisely.

Curb weight: the weight of a vehicle with standard equipment including the maximum capacity of fuel, oil and coolant. It also includes the air conditioning system and optional equipment if these are installed on the vehicle, but does not include passengers or luggage.

Maximum tire load: the maximum tire load is the maximum permissible weight in kilograms or lbs for which a tire is approved.

Maximum permissible tire pressure: maximum permissible tire pressure for one tire.

Maximum load on one tire: maximum load on one tire. This is calculated by dividing the maximum axle load of one axle by two.

PSI (pounds per square inch): standard unit of measurement for tire pressure.

Aspect ratio: ratio between tire height and tire width in percent.

Tire pressure: the pressure inside the tire which applies an outward force to every square inch of the tire. The tire pressure is specified in pounds per square inch (psi), in kilopascals (kPa) or in bar. The tire pressure should only be corrected when the tires are cold.

Cold tire pressure: the tires are cold when the vehicle has been parked for at least 3 hours without direct sunlight on the tires or the vehicle has been driven for less than 1 mile (1.6 km).

Tire contact surface: the part of the tire that comes into contact with the road.

Tire bead: the purpose of the tire bead is to ensure that the tire sits securely on the wheel rim. There are several wire cores in the tire bead to prevent the tire from changing length on the wheel rim.

Side wall: the part of the tire between the tread and the tire bead.

Weight of optional equipment: the combined weight of the optional equipment weighing more than the replaced standard parts and more than 5 lbs (2.3 kg). This optional equipment, such as high-performance brakes, level control system, a roof luggage rack or high-performance batteries, is not included in the curb weight and the weight of the accessories.

TIN (Tire Identification Number): a unique identification number which can be used by a tire manufacturer to identify tires, for example, in a product recall, and thus identify the purchasers. The TIN is made up of the manufacturer's identity code, tire size, tire type code and the manufacturing date.

Load-bearing index: the load-bearing index is a code that contains the maximum load-bearing capacity of a tire.

Traction: traction is the grip resulting from friction between the tires and the road surface.

Wear indicator: narrow bars (tread wear bars) that are distributed over the tire contact surface. If the tire tread is level with the bars, the wear limit of 1/16 in (1.6 mm) has been reached.

Distribution of vehicle occupants: distribution of vehicle occupants over designated seat positions in a vehicle.

Maximum permissible payload weight: nominal load and luggage load plus 150 lb (68 kg) multiplied by the number of seats in the vehicle.

Changing a wheel

Notes on selecting, installing and replacing tires

⚠ **WARNING** Risk of accident due to incorrect wheel and tire dimensions

If wheels and tires of the wrong size are installed, the service brakes or components in the brake system and in the wheel suspension may be damaged.

- Always replace wheels and tires with ones that fulfill the specifications of the original part.

For wheels, pay attention to the following:

- Designation
- Type

For tires, pay attention to the following:

- Designation
- Manufacturer
- Type

WARNING Risk of injury through exceeding the specified tire load-bearing capacity or the permissible speed rating

Exceeding the specified tire load rating or the permissible speed rating may lead to tire damage and to the tires bursting.

- Therefore, only use tire types and sizes approved for your vehicle model.
- Observe the tire load rating and speed rating required for your vehicle.

NOTE Vehicle and tire damage caused by non-approved tire types and sizes

For safety reasons, only use tires, wheels and accessories which have been specially approved by Mercedes-Benz for your vehicle.

These tires are specially adapted to the active safety systems, such as ABS, ESP® and 4MATIC, and marked as follows:

- MO = Mercedes-Benz Original
- MOE = Mercedes-Benz Original Extended (tires with run-flat characteristics for certain wheels only)
- MO1 = Mercedes-Benz Original (only certain AMG tires)

Otherwise, certain properties, such as driving characteristics, vehicle noise emissions, consumption, etc. could be adversely affected. Furthermore, other tire sizes could result in the tires rubbing against the body and axle components when loaded. This could result in damage to the tire or the vehicle.

Only use tires, wheels and accessories that have been checked and recommended by Mercedes-Benz.

NOTE Risk to driving safety from retreaded tires

Retreaded tires are neither tested nor recommended by Mercedes-Benz, since previous damage cannot always be detected on retreaded tires.

For this reason driving safety cannot be guaranteed.

- Do not use used tires if you have no information about their previous usage.

NOTE Possible wheel and tire damage when driving over obstacles

Large wheels have a smaller section width. As the section width decreases, the risk of wheels and tires being damaged when driving over obstacles increases.

- ▶ Avoid obstacles or drive especially carefully.
- ▶ Reduce your speed when driving over curbs, speed bumps, manhole covers and potholes.
- ▶ Avoid particularly high curbs.

! NOTE Possible wheel and tire damage when parking on curbs or in potholes

Parking on curbs or in potholes can damage the wheels and tires.

- ▶ Only park on as level a surface as possible.
- ▶ Avoid curbs and potholes when parking.

! NOTE Damage to electronic component parts due to the use of tire-installing tools

Vehicles with tire pressure monitoring system: There are electronic component parts in the wheel.

If tire-installing tools are positioned in the area of the valve, the electronic components could be damaged.

- ▶ Tire-installing tools should not be applied in the area of the valve.
- ▶ Always have tires change at a qualified specialist workshop.

! NOTE Damage to summer tires at low ambient temperatures

At low ambient temperatures, tears could form when driving with summer tires, causing permanent damage to the tires.

- ▶ At temperatures below 45 °F (7 °C) use M+S tires.

Accessory parts which are not approved for your vehicle by Mercedes-Benz, or which are not used correctly, can impair the operating safety.

Before purchasing and using non-approved accessories, visit a qualified specialist workshop and inquire about:

- Suitability
- Legal stipulations
- Factory recommendations

⚠ WARNING Risk of accidents with sports tires

The special tire tread in combination with the optimized tire compound means that the risk of skidding or hydroplaning on wet roads is increased.

In addition, the tire grip is greatly reduced at a low outside temperature and tire running temperature.

- ▶ Switch on ESP® and adapt your driving style accordingly.
- ▶ Use M+S tires at outside temperatures of less than 45°F (7°C).
- ▶ Only use tires suitable for the intended use.

Observe the following when selecting, installing and replacing tires:

- Furthermore, the use of certain tire types in certain regions and areas of operation can be highly beneficial.
- Only use tires and wheels of the same type (summer tires, winter tires, MOExtended tires) and the same make.
- Only install wheels of the same size on one axle (left and right).

  It is only permissible to install a different wheel size in the event of a flat tire in order to drive to the specialist workshop.
- **Vehicles with a tire pressure monitoring system:** all installed wheels must be equipped with functioning sensors for the tire pressure monitoring system.
- At temperatures below 45 °F (7 °C), use winter tires or all-season tires marked M+S for all wheels.

  Winter tires provide the best possible grip in wintry road conditions.
- For M+S tire, only use tires with the same tread.
- Observe the maximum permissible speed for the M+S tire installed.

  If the tire's maximum speed is below that of the vehicle, this must be indicated by an appropriate label in the driver's field of vision.
- Break in new tires at moderate speeds for the first 60 miles (100 km).
- Replace the tires after six years at the latest, regardless of wear.
- **When replacing with tires that do not feature run-flat characteristics:** vehicles with MOExtended tires are not equipped with a TIREFIT kit at the factory. Equip the vehicle with a TIREFIT kit after replacing with tires that do not feature run-flat characteristics, e.g. winter tires.

For more information on wheels and tires, contact a qualified specialist workshop.

Notes on rotating wheels

WARNING Risk of injury through different wheel sizes

Rotating the front and rear wheels can severely impair the driving characteristics.

The wheel brakes or suspension components may also be damaged.

- Rotate front and rear wheels only if the wheels and tires are of the same dimensions.

Observe the instructions and safety notes on "Changing a wheel" (→ page 564)

The wear patterns on the front and rear wheels differ:

- Front wheels wear more on the tire shoulder
- Rear wheels wear more in the center of the tire

Do not drive with tires that have too little tread depth. This significantly reduces traction on wet roads (hydroplaning).

On vehicles that have the same size front and rear wheels, rotate the wheels according to the intervals in the tire manufacturer's warranty book in your vehicle documents. If this is not available, rotate the tires every 3,000 to 6,000 miles (5,000 to 10,000 km), depending on the wear. Ensure that the direction of rotation is maintained.

Notes on storing wheels

When storing wheels, observe the following notes:

- After removing wheels, store them in a cool, dry and preferably dark place.
- Protect the tires from contact with oil, grease or fuel.

Overview of the tire-change tool kit

Apart from some country-specific variants, vehicles are not equipped with a tire-change tool kit. Consult a qualified specialist workshop to find out which wheel change tools are necessary and approved for changing a wheel on your vehicle.

You require the following tools, forexample, to change a wheel:

- Jack
- Chock
- Lug wrench
- Alignment bolt

The tire-change tool kit is located in tool bag (1) in the trunk.

ⓘ When stowing the tool bag, make sure that it is adequately secured.

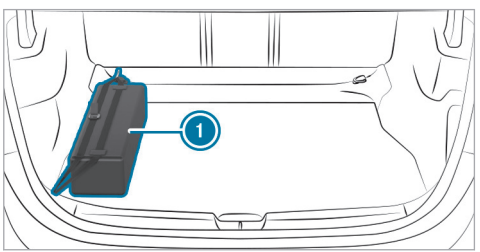

The tool bag contains:

- Jack
- Gloves
- Lug wrench
- Alignment bolt
- Folding chock
- Ratchet for jack

Preparing the vehicle for a wheel change

Requirements

- The vehicle is not on a slope.
- The vehicle is on solid, non-slippery and level ground.
- The required tire-change tool kit is available.

ⓘ If your vehicle is not equipped with the tire-change tool kit, consult a qualified specialist workshop to find out about suitable tools.

▶ Apply the electric parking brake manually.

▶ Move the front wheels to the straight-ahead position.

▶ Shift the transmission to position P.

▶ Switch off the vehicle.

- Make sure that the vehicle cannot be started.
- Place chocks or other suitable items under the front and rear of the wheel that is diagonally opposite the wheel you wish to change.
- If necessary, remove the wheel trim/hub caps (→ page 569).
- Raise the vehicle (→ page 570).

Removing and installing the wheel trim/hub caps

Requirements

- The vehicle is prepared for a wheel change (→ page 568).

Wheel trim

The wheel trim covers the wheel bolts on vehicles with aluminum wheels. Before unscrewing the wheel bolts, remove the wheel trim.

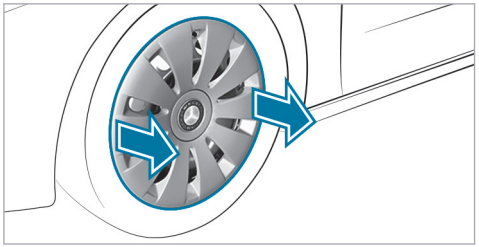

- **To remove:** using both hands, carefully reach into two wheel trim openings and remove the wheel trim.
- **To install:** place the wheel trim in position and press firmly until it engages.

Plastic hub cap

To remove:

- Turn the center cover of the hub cap counter-clockwise and remove the hub cap.

To install:

- Make sure that the center cover of the hub cap is turned counter-clockwise.
- Position the hub cap and turn the center cover clockwise until the hub cap engages physically and audibly.

Aluminum hub cap

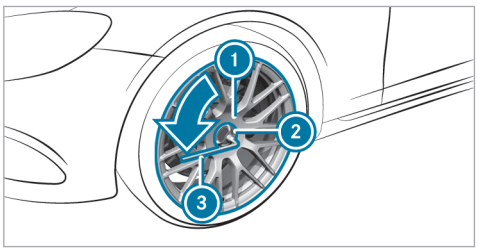

To remove:

- Position socket (2) from the tire-change tool kit on hub cap (1).
- Position wheel wrench (3) on socket (2).
- Using wheel wrench (3), turn hub cap (1) counter-clockwise and remove it.

To install:

- Follow the instructions above in reverse order.

ⓘ **Specified tightening torque:** 18 lb-ft (25 Nm).

Raising the vehicle when changing a wheel

Requirements

- There are no persons in the vehicle.
- The vehicle has been prepared for a wheel change (→ page 568).
- The wheel trims and hub caps have been removed (→ page 569).

Important notes on using the jack:

- Use only a vehicle-specific jack that has been approved by Mercedes-Benz to raise the vehicle.
- The jack is only designed for raising and holding the vehicle for a short time while a wheel is being changed and not for maintenance work under the vehicle.
- The jack must be placed on a firm, flat and non-slip surface. If necessary, use a large, flat, load-bearing, non-slip underlay.
- The foot of the jack must be positioned vertically under the jack support point.

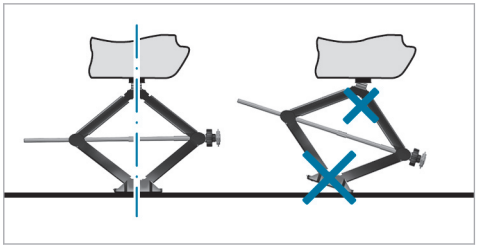

Rules of conduct when the vehicle is raised:

- Never place your hands or feet under the vehicle.
- Never lie under the vehicle.
- Do not start the vehicle and do not release the electric parking brake.
- Do not open or close any doors or the trunk lid.

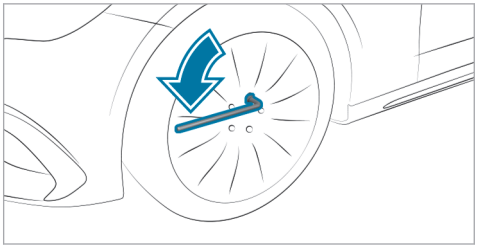

▶ Using the lug wrench, loosen the wheel bolts on the wheel you wish to change by about one full turn. Do not unscrew the screws completely.

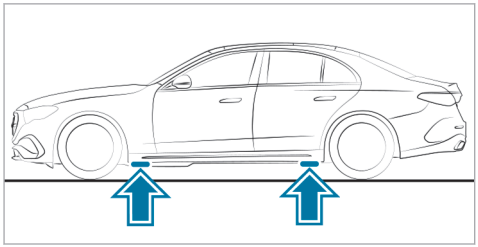

Position of the jack support points

WARNING Risk of injury from incorrect positioning of the jack

If you do not position the jack correctly at the appropriate jacking point of the vehicle, the jack could tip with the vehicle raised.

- Only position the jack at the appropriate jacking point of the vehicle. The base of the jack must be positioned vertically under the jacking point of the vehicle.

NOTE Damage to the vehicle due to the jack

If you do not position the jack at the jack support points provided for this purpose, you could damage your vehicle.

- Only position the jack at the jack support points provided for this purpose.

- Take the ratchet out of the tire-change tool kit and place it on the hexagon nut of the jack so that the letters "AUF" are visible.

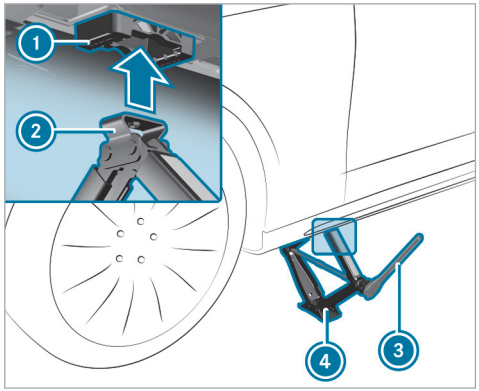

- Position support 2 of jack 4 on jack support point 1.
- Turn ratchet 3 clockwise until support 2 sits completely on jack support point 1 and the base of the jack lies evenly on the ground.
- Turn ratchet 3 until the tire is raised a maximum of 1.2 in (3 cm) from the ground.
- Loosen and remove the wheel (→ page 572).

Removing a wheel

Requirements

- The vehicle is raised (→ page 570).

When changing a wheel, avoid applying any force to the brake discs, as this could impair the level of comfort when braking.

NOTE Damage to the wheels' plastic elements when changing a wheel

Plastic elements on wheels may be damaged when removing and repositioning the wheel.

- Do not raise the wheels by the plastic elements when removing and repositioning.

NOTE Damage to threading from dirt on wheel bolts

- Do not place wheel bolts in sand or on a dirty surface.

- Unscrew the uppermost wheel bolt completely.

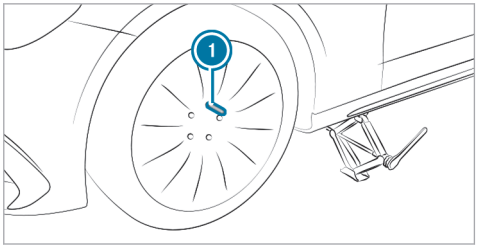

- Screw centering pin (1) into the thread instead of the wheel bolt.
- Unscrew the remaining wheel bolts completely.
- Remove the wheel.

Installing a new wheel

Requirements

- The wheel to be changed is removed and the centering pin is screwed in (→ page 572).

WARNING Risk of accident from losing a wheel

Oiled, greased or damaged wheel bolt/wheel nut threads or wheel hub/wheel mounting bolt threads can cause the wheel bolts/wheel nuts to come loose.

- Never oil or grease the threads.
- In the event of damage to the threads, contact a qualified specialist workshop immediately.
- Have the damaged wheel bolts or damaged hub threads replaced.
- Do not continue driving.

- Observe the information on the choice of tires (→ page 564).

For tires with a specified direction of rotation, an arrow on the side wall of the tire indicates the correct direction of rotation. Observe the direction of rotation when installing the tire.

NOTE Damage to the wheels' plastic elements when changing a wheel

Plastic elements on wheels may be damaged when removing and repositioning the wheel.

- Do not raise the wheels by the plastic elements when removing and repositioning.

- Slide the wheel to be installed onto the centering pin and push it on.

WARNING Risk of injury from tightening wheel bolts and nuts

If you tighten the wheel bolts or wheel nuts when the vehicle is raised, the jack could tip.

- Only tighten wheel bolts or wheel nuts when the vehicle is on the ground.

- Be sure to observe the instructions and safety notes on "Changing a wheel" (→ page 564).
- For safety reasons, only use wheel bolts which have been approved by Mercedes-Benz and for the wheel in question.

NOTE Damage to paintwork of the wheel rim when screwing in the first wheel bolt

If the wheel has too much play when screwing in the first wheel bolt, the wheel rim paint can be damaged.

- Press the wheel firmly against the wheel hub when screwing in the first wheel bolt.

- Tighten the wheel bolts evenly in a diagonal pattern in the order indicated until they are finger-tight.

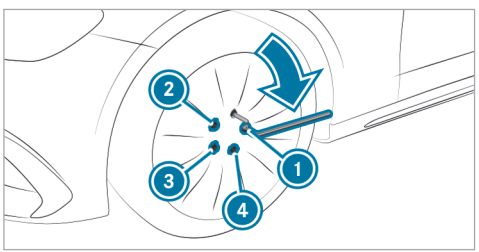

- Unscrew and remove the centering pin.

F214 0032 13

- Tighten the last wheel bolt until it is finger-tight.
- Lower the vehicle (→ page 573).

Lowering the vehicle after a wheel change

Requirements

- The new wheel has been installed (→ page 572).

NOTE Risk of vehicle jack becoming trapped by the AIRMATIC system

If the AIRMATIC system has released air when raising the vehicle, the jack can become trapped when the vehicle is lowered.

- Start the engine. This adapts the vehicle level.
- Remove the jack from under the vehicle.

- **To lower the vehicle:** place the ratchet onto the hexagon nut of the jack so that the letters "AB" are visible and turn counter-clockwise.

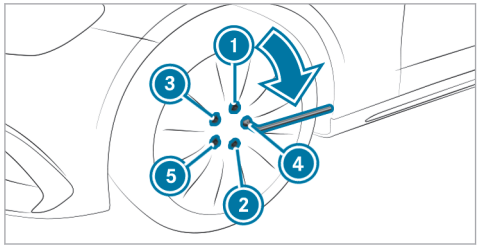

- Tighten the wheel bolts evenly in a diagonal pattern in the order indicated (1) to (5) with an initial maximum force of 59 lb-ft (80 Nm).
- Tighten the wheel bolts evenly in a diagonal pattern in the order indicated (1) to (5) with the specified tightening torque of 111 lb-ft (150 Nm).

⚠ WARNING Risk of accident due to incorrect tightening torque

The wheels could come loose if the wheel bolts or wheel nuts are not tightened to the prescribed torque.

- Ensure that the wheel bolts or wheel nuts are tightened to the prescribed tightening torque.
- If you are not sure, do not move the vehicle. Contact a qualified specialist workshop and have the tightening torque checked immediately.

- Check the tire pressure of the newly installed wheel and adjust it if necessary.

ⓘ The following does not apply if the new wheel is an emergency spare wheel.

- **Vehicles with a tire pressure loss warning system:** restart the tire pressure loss warning system (→ page 552).
- **Vehicles with a tire pressure monitoring system:** restart the tire pressure monitoring system (→ page 551).

Emergency spare wheel

Notes on the emergency spare wheel

⚠ WARNING Risk of accident caused by incorrect wheel and tire dimensions

The wheel or tire sizes and the tire type of the emergency spare wheel or spare wheel and the wheel to be replaced may differ. The emergency spare wheel or spare wheel can significantly impair driving characteristics of the vehicle.

To prevent hazardous situations:

- Drive carefully.
- Never install more than one emergency spare wheel or spare wheel that differs in size.
- Only use an emergency spare wheel or spare wheel briefly.
- Do not deactivate ESP®.
- Have the emergency spare wheel or spare wheel of a different size replaced at the nearest qualified specialist work-

shop. The new wheel must have the correct dimensions.

Observe the following notes on installing an emergency spare wheel:

- The maximum permissible speed with an emergency spare wheel installed is 50 mph (80 km/h).
- Do not install the emergency spare wheel with snow chains.
- Replace the emergency spare wheel after six years at the latest, regardless of wear.
- Use the wheel bolts that are included with the emergency spare wheel.
- Check the tire pressure of the emergency spare wheel when it is installed. Correct the pressure as necessary.

ⓘ The specified tire pressure is stated on the label of the emergency spare wheel.

ⓘ **Vehicles with a tire pressure loss warning system:** if an emergency spare wheel is installed, the tire pressure loss warning system cannot function reliably. Only restart the system again when the emergency spare wheel has been replaced with a new wheel.
Vehicles with a tire pressure monitoring system: if an emergency spare wheel is installed, the tire pressure monitoring system cannot function reliably. For a few minutes after an emergency spare wheel is installed, the system may still display the tire pressure of the removed wheel. Only restart the system again when the emergency spare wheel has been replaced with a new wheel.

Be sure to also observe the following further related subjects:

- Notes on tire pressure (→ page 547)
- Tire and Loading Information placard (→ page 553)
- Tire pressure table (→ page 548)
- Notes on installing tires (→ page 564)
- Installing an emergency spare wheel (→ page 568)

Notes on technical data

The data stated only applies to vehicles with standard equipment. You can obtain further information from an authorized Mercedes-Benz Center.

Vehicle electronics

Two-way radios

Notes on installing two-way radios

WARNING Risk of accident due to improper work on two-way radios

If two-way radios are manipulated or retrofitted incorrectly, the electromagnetic radiation from the two-way radios can interfere with the vehicle electronics and jeopardize the operating safety of the vehicle.

- You should have all work on electrical and electronic components carried out at a qualified specialist workshop.

WARNING Risk of accident due to improper operation of two-way radios

If you use two-way radios in the vehicle improperly, their electromagnetic radiation can disrupt the vehicle's electronics. This is the case in the following situations, in particular:

- The two-way radio is not connected to an exterior antenna.
- The exterior antenna is installed incorrectly or is not a low-reflection antenna.

This could jeopardize the operating safety of the vehicle.

- Have the low-reflection exterior antenna installed at a qualified specialist workshop.
- When operating two-way radios in the vehicle, always connect them to the low-reflection exterior antenna.

NOTE Invalidation of the operating permit due to failure to comply with the instructions for installation and use

The operating permit may be invalidated if the instructions for installation and use of two-way radios are not observed.

- Only use approved frequency bands.
- Observe the maximum permissible output power in these frequency bands.
- Only use approved antenna positions.

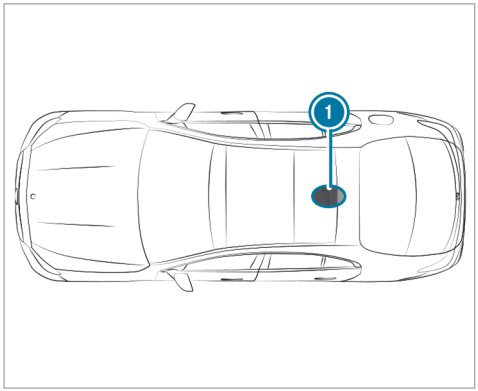

Vehicles without panorama roof with power tilt/sliding panel

1 Rear roof area

On vehicles with a panorama roof with power tilt/sliding panel, installing an antenna is not permitted.

Use Technical Specification ISO/TS 21609 (Road Vehicles – "EMC guidelines for installation of aftermarket radio frequency transmitting equipment") when retrofitting two-way radios. Comply with the legal requirements for detachable parts.

If your vehicle has fittings for two-way radio equipment, use the power supply and antenna connectors provided in the pre-installation. Observe the manufacturer's supplements when installing.

Two-way radio transmission output

The maximum transmission output (PEAK) at the base of the antenna must not exceed the values in the following table.

Frequency band and maximum transmission output

Frequency band	Maximum transmission output
2 m frequency band 144–174 MHz	50 W
Terrestrial Trunked Radio (TETRA) 380–460 MHz	10 W
Two-way radio 2G	2 W
Two-way radio 3G/4G/5G	0.5 W

The following can be used in the vehicle without restrictions:

- two-way radios with a maximum transmission output of 100 mW
- two-way radios with transmitter frequencies in the 380–410 MHz frequency band and a maximum transmission output of 2 W (TETRA)
- mobile phones (2G/3G/4G/5G)

There are no restrictions regarding the position of the antenna on the outside of the vehicle for the following frequency bands:

- Terrestrial Trunked Radio (TETRA)
- 2G/3G/4G/5G

Radio regulations

Regulatory radio identification and specific notes

The tables and sections contain the following regulatory radio information:

- Manufacturer information
- Regulatory radio required identification listed by country/region:
  - Manufacturer information
  - Model designations
  - Radio equipment approval numbers
- Specific notes on radio-based vehicle components

Further information and updates are available at the following web address:

https://
regulatoryradioinformation.corpinter.net/us

Overview of manufacturers

Manufacturer	Manufacturer information
ADC	ADC Automotive Distance Control Systems GmbH, Peter-Dornier-Straße 10, 88131 Lindau, Germany
Bosch	Robert Bosch GmbH, Daimlerstraße 6, 71229 Leonberg, Germany
Continental Antenna	Continental Advanced Antenna GmbH, Römerring 1, 31137 Hildesheim, Germany
Continental Automotive	Continental Automotive GmbH, Siemensstraße 12, 93055 Regensburg, Germany
Gentex	Gentex Corporation, 600 North Centennial Street, Zeeland MI 49464, USA
Harman Becker	Harman Becker Automotive Systems GmbH, Becker-Goehring-Strasse 18, 76307 Karlsbad, Germany
HELLA	HELLA KGaA Hueck & Co., Rixbecker Straße 75, 59552 Lippstadt, Germany
Hirschmann	Hirschmann Car Communication GmbH, Stuttgarter Straße 45-51, 72654 Neckartenzlingen, Germany

Manufacturer	Manufacturer information
Huf Baolong	Huf Baolong Electronics Bretten GmbH, Gewerbestraße 40, 75015 Bretten, Germany
HUF	HUF Hülsbeck & Fürst GmbH & Co. KG, Steeger Straße 17, 42551 Velbert, Germany
KATHREIN	KATHREIN Automotive GmbH & Co. KG, Römerring 1, 31137 Hildesheim, Germany
LEOPOLD KOSTAL	LEOPOLD KOSTAL GmbH & Co. KG, Hauert 11, 44227 Dortmund, Germany

Manufacturer	Manufacturer information
MARQUARDT	MARQUARDT GmbH, Schloßstraße 16, 78604 Rietheim-Weilheim, Germany
Meta System	Meta System S.P.A., Via T. Galimberti 5, 42124 Reggio Emilia, Italy
Molex	Molex CVS Dabendorf GmbH, Märkische Straße 72, 15806 Zossen, Germany
Panasonic	Panasonic Automotive Systems Europe GmbH, Robert-Bosch-Straße 27, 63225 Langen, Germany

Manufacturer	Manufacturer information
Schrader	Schrader Electronics Ltd., 11 Technology Park, Belfast Road, Antrim BT41 1QS, Northern Ireland, United Kingdom
Sennheiser	Sennheiser electronic GmbH & Co. KG, Am Labor 1, 30900 Wedemark, Germany
Veoneer	Veoneer Sweden AB, Wallentinsvägen 22, 44737 Vårgårda, Sweden
WITTE-Velbert	WITTE-Velbert GmbH & Co. KG, Hoeferstr. 3-15, 42551 Velbert, Germany

Algeria





Regulatory radio identification

Manufacturer	Model designation	Radio equipment approval number
Continental Antenna	RKE223GNS (locking system)	71/H/ANF/2021
Continental Automotive	CMKG1 (locking system)	122/H/ANF/2021
Continental Automotive	MARS Keyless (locking system)	122/H/ANF/2021
HELLA	DM4 (locking system)	123/H/ANF/2021
Hirschmann	920287A (locking system)	106/H/ANF/2020
Hirschmann	920287B (locking system)	107/H/ANF/2020
Hirschmann	920702A (locking system)	133/H/ANF/2022
HUF	HUF13145 (locking system)	105/H/ANF/2022
LEOPOLD KOSTAL	KK1 (locking system)	172/H/ANF/2021
MARQUARDT	DC12A (locking system)	188/H/ANF/2021
MARQUARDT	DC12B (locking system)	189/H/ANF/2021
MARQUARDT	DC12K (locking system)	190/H/ANF/2021
MARQUARDT	MS5 (locking system)	195/H/ANF/2021

Manufacturer	Model designation	Radio equipment approval number
MARQUARDT	MK1 (locking system)	193/H/ANF/2021
MARQUARDT	MK2 (locking system)	194/H/ANF/2021
MARQUARDT	3350.38 (locking system)	186/H/ANF/2021
Schrader	AG5SP4 (tire pressure sensor)	3681/1-73.OA 1639/DT/DG/ARPT/15
Schrader	AG3PF4 (tire pressure sensor)	652/1/DT/DG/ARPCE/2020
Schrader	BG3FP4 (tire pressure sensor)	56/H/ANF/2021
Schrader	GG4T (tire pressure sensor)	3994/1.69-DA/2098/DT/DG/ARPT/17
Schrader	DG6W2D4 (tire pressure sensor)	2695/1-NO.431396/DT/DG/ARPT/17
Huf Baolong	TSSRE4A (tire pressure sensor)	2695/1-NO.431396/DT/DG/ARPT/17
WITTE-Velbert	SDHTAG3NFC (locking system)	32/H/ANF/2021

Argentina

Regulatory radio identification

Manufacturer	Model designation	Radio equipment approval number
Continental Antenna	RKE213E1 (antenna amplifier)	H-26206
Continental Antenna	RKE223E1 (antenna amplifier)	H-24637
Continental Automotive	CMKG1 (locking system)	H-24376
Continental Automotive	MARS Keyless (locking system)	H-17929

Manufacturer	Model designation	Radio equipment approval number
Continental Automotive	D-WMI2020A (control unit)	H-23974
HELLA	DM4 (locking system)	H-17845
Hirschmann	920287A (locking system)	H-15694
Hirschmann	920287B (locking system)	H-15695
Hirschmann	920702A (locking system)	H-28310

Manufacturer	Model designation	Radio equipment approval number
Huf Baolong	TSSRE4A (tire pressure sensor)	H-20027
HUF	HUF13145 (locking system)	H-28067
HUF	HUF14632 (locking system)	H-15541
HUF	HUF4761 (locking system)	H-11545
LEOPOLD KOSTAL	KK1 (locking system)	H-16874

Manufacturer	Model designation	Radio equipment approval number
MARQUARDT	DC12A (locking system)	H-17689
MARQUARDT	DC12B (locking system)	H-21034
MARQUARDT	DC12K (locking system)	H-21035
MARQUARDT	MS2 (locking system)	H-17598
MARQUARDT	MS4 (locking system)	H-23101
MARQUARDT	MS5 (locking system)	H-24933
MARQUARDT	MK1 (locking system)	H-17213

Manufacturer	Model designation	Radio equipment approval number
MARQUARDT	MK2 (locking system)	H-17212
MARQUARDT	3350.38 (locking system)	H-23166
Schrader	AG5SP4 (tire pressure sensor)	H-4788
Schrader	AG3PF4 (tire pressure sensor)	H-23292
Schrader	BG3FP4 (tire pressure sensor)	H-25586

Manufacturer	Model designation	Radio equipment approval number
Schrader	GG4T (tire pressure sensor)	H-20495
Schrader	DG6W2D4 (tire pressure sensor)	H-20959
WITTE-Velbert	SDHTAG3NFC (locking system)	H-24664

Australia

Regulatory radio identification

Manufacturer	Model designation
ADC	ARS4-A (radar sensor)
ADC	ARS4-C (radar sensor)
Bosch	MRR1Rear (radar sensor)
Bosch	MRRe14FCR (radar sensor)
Bosch	FR5CPCCF (radar sensor)
Continental Antenna	RKE213E1 (antenna amplifier)
Continental Antenna	RKE223E1 (antenna amplifier)



Manufacturer	Model designation
Continental Automotive	CMKG1 (locking system)
Continental Automotive	CMKG2 (locking system)
Continental Automotive	MARS Keyless (locking system)
Hirschmann	920287A (locking system)
Hirschmann	920287B (locking system)
Hirschmann	920702A (locking system)
Huf Baolong	TSSRE4A (tire pressure sensor)



Manufacturer	Model designation
LEOPOLD KOSTAL	KK1 (locking system)
MARQUARDT	MK1 (locking system)
MARQUARDT	MK2 (locking system)
MARQUARDT	3350.38 (locking system)
Schrader	AG5SP4 (tire pressure sensor)
Schrader	AG3PF4 (tire pressure sensor)
Schrader	BG3FP4 (tire pressure sensor)
Schrader	GG4T (tire pressure sensor)



Manufacturer	Model designation
Schrader	DG6W2D4 (tire pressure sensor)
Veoneer	77V12BSM (radar sensor)
Veoneer	77V12CRN (radar sensor)
Veoneer	77V125CRN (radar sensor)
Veoneer	MMRV1 (radar sensor)

Bahamas

Regulatory radio identification

Manufacturer	Model designation	Radio equipment approval number
ADC	ARS4-A (radar sensor)	URCA_TA_2014_082
ADC	ARS4-C (radar sensor)	URCA_TA_2019_167
Bosch	MRR1Rear (radar sensor)	URCA_TA/2017_184
Bosch	MRRe14FCR (radar sensor)	URCA_TA/2017_157
Bosch	FR5CPCCF (radar sensor)	URCA_TA_2019_195
Continental Automotive	CMKG1 (locking system)	URCA_TA/2020_068
Continental Automotive	MARS Keyless (locking system)	URCA_TA/2017_119
Continental Antenna	RKE213E1 (antenna amplifier)	UCRA_TA/2016_009
Continental Antenna	RKE223E1GNS (antenna amplifier)	UCRA_TA/2020_032
HELLA	DM4 (locking system)	URCA_TA/2017_078
Hirschmann	920287A (locking system)	URCA_TA/2019_053
Hirschmann	920287B (locking system)	URCA_TA/2019_052
Hirschmann	920702A (locking system)	URCA_TA/2022_043
HUF	HUF13145 (locking system)	URCA_TA_2022_057
HUF	HUF4761 (locking system)	URCA_TA/2015_087
HUF	HUF4761 (locking system)	URCA_TA/2015_087
Huf Baolong	TSSRE4A (tire pressure sensor)	URCA_TA/2017_094
LEOPOLD KOSTAL	KK1 (locking system)	URCA_TA/2015_081

Manufacturer	Model designation	Radio equipment approval number
MARQUARDT	DC12A (locking system)	URCA_TA_2017_042
MARQUARDT	DC12B (locking system)	URCA_TA_2019_128
MARQUARDT	DC12K (locking system)	URCA_TA_2019_129
MARQUARDT	MS2 (locking system)	URCA_TA/2017_021
MARQUARDT	MS4 (locking system)	URCA_TA_2019_141
MARQUARDT	MS5 (locking system)	URCA_TA_2020_141, URCA_TA_2022_228
MARQUARDT	MK1 (locking system)	URCA_TA/2015_031
MARQUARDT	MK2 (locking system)	URCA_TA/2015_033
MARQUARDT	3350.38 (locking system)	URCA_TA/2019_250
Schrader	AG5SP4 (tire pressure sensor)	URCA_TA_TA/2015_009
Schrader	AG3PF4 (tire pressure sensor)	URCA_TA_2019_101
Schrader	BG3FP4 (tire pressure sensor)	URCA_TA_2021_001
Schrader	GG4T (tire pressure sensor)	URCA_TA_2020_046
Schrader	DG6W2D4 (tire pressure sensor)	URCA_TA_2019_247
Veoneer	77V12BSM (radar sensor)	URCA_TA_2019_169
Veoneer	77V12CRN (radar sensor)	URCA_TA_2019_168
Veoneer	77V125CRN (radar sensor)	URCA_TA_2021_027
Veoneer	MMRV1 (radar sensor)	URCA_TA/2015_063
WITTE-Velbert	SDHTAG3NFC (locking system)	URCA_TA_2020_056

Belarus

Regulatory radio identification

Manufacturer	Model designation
ADC	ARS4-A (radar sensor)
ADC	ARS4-C (radar sensor)
Bosch	MRR1Rear (radar sensor)
Bosch	MRRe14FCR (radar sensor)
Bosch	FR5CPCCF (radar sensor)
Continental Antenna	RKE213E1 (antenna amplifier)
Continental Antenna	RKE223E1GNS (antenna amplifier)
Continental Automotive	CMKG1 (locking system)
Continental Automotive	CMKG2 (locking system)
Continental Automotive	MARS Keyless (locking system)
Harman Becker	HERMES 3.0 (communication module)
HELLA	DM4 (locking system)
LEOPOLD KOSTAL	KK1 (locking system)
MARQUARDT	DC12A (locking system)
MARQUARDT	DC12B (locking system)
MARQUARDT	DC12K (locking system)
MARQUARDT	MS2 (locking system)
MARQUARDT	MS4 (locking system)
MARQUARDT	MS5 (locking system)
MARQUARDT	MK1 (locking system)
MARQUARDT	MK2 (locking system)
MARQUARDT	3350.38 (locking system)
Veoneer	77V12BSM (radar sensor)
Veoneer	77V12CRN (radar sensor)

Manufacturer	Model designation
Veoneer	77V125CRN (radar sensor)
Veoneer	MMRV1 (radar sensor)
WITTE-Velbert	SDHTAG3NFC (locking system)

Botswana

Regulatory radio identification

Manufacturer	Model designation	Radio equipment approval number
ADC	ARS4-A (radar sensor)	BOCRA/TA/2018/2026
ADC	ARS4-C (radar sensor)	BOCRA/TA/2020/5186
Bosch	MRRe14FCR (radar sensor)	BOCRA/TA/2019/4674
Bosch	FR5CPCCF (radar sensor)	BOCRA/TA/2019/4975
Bosch	MRR1Rear (radar sensor)	BOCRA/TA/2017/3788
Continental Antenna	RKE213E1 (antenna amplifier)	BOCRA/TA/2019/4387
Continental Antenna	RKE223E1GNS (antenna amplifier)	BOCRA/TA/2019/5050
Continental Automotive	CMKG1 (locking system)	BOCRA/TA/2019/5075
Continental Automotive	CMKG2 (locking system)	BOCRA/TA/2023/8144
Continental Automotive	MARS Keyless (locking system)	BOCRA/TA/2019/4661
HELLA	DM4 (locking system)	BOCRA/TA/2019/4662
Hirschmann	920287A (locking system)	BOCRA/TA/2019/4724
Hirschmann	920287B (locking system)	BOCRA/TA/2019/4723
Hirschmann	920702A (locking system)	BOCRA/TA/2022/7099
HUF	HUF13145 (locking system)	HUF13145

Manufacturer	Model designation	Radio equipment approval number
HUF	HUF4761 (locking system)	BOCRA/TA/2019/4664
LEOPOLD KOSTAL	KK1 (locking system)	BOCRA/TA/2019/4593
MARQUARDT	DC12A (locking system)	BOCRA/TA/2019/4389
MARQUARDT	DC12B (locking system)	BOCRA/TA/2019/4388
MARQUARDT	DC12K (locking system)	BOCRA/TA/2019/4390
MARQUARDT	MS2 (locking system)	BOCRA/TA/2019/5135
MARQUARDT	MS4 (locking system)	BOCRA/TA/2019/4758
MARQUARDT	MS5 (locking system)	BOCRA/TA/2020/5473
MARQUARDT	MK1 (locking system)	BOCRA/TA/2019/4359
MARQUARDT	MK2 (locking system)	BOCRA/TA/2019/4360
MARQUARDT	3350.38 (locking system)	BOCRA/TA/2019/4687
Veoneer	77V12BSM (radar sensor)	BOCRA/TA/2019/4975
Veoneer	77V12CRN (radar sensor)	BOCRA/TA/2019/4980
Veoneer	77V125CRN (radar sensor)	BOCRA/TA/2021/6191
WITTE-Velbert	SDHTAG3NFC (locking system)	BOCRA/TA/2020/5342

Brazil

Note on two-way radio systems in the vehicle:

These systems are not protected against harmful interference and must not cause interference in properly approved systems.

Regulatory radio identification

ANATEL

Manufacturer	Model designation	Radio equipment approval number
Continental Antenna	RKE223E1 (antenna amplifier)	03691-15-05 298
Continental Antenna	RKE213E1 (antenna amplifier)	07359-21-12 817
Continental Antenna	RKE213E1 (antenna amplifier)	3691-15-529 8
Continental Automotive	CMKG1 (locking system)	00325-20-02 149
Continental Automotive	CMKG2 (locking system)	01334-23-02 149

ANATEL

Manufacturer	Model designation	Radio equipment approval number
Continental Automotive	MARS Keyless (locking system)	03189-17-02 856
HELLA	DM4 (locking system)	04689-17-05 364
Hirschmann	920287A (locking system)	1855-12-576 2
Hirschmann	920287B (locking system)	1787-12-805 8
HUF	HUF13145 (locking system)	HUF13145

ANATEL

Manufacturer	Model designation	Radio equipment approval number
HUF	HUF14632 (locking system)	03627-15-06 643
HUF	HUF4761 (locking system)	00053-13-06 643
LEOPOLD KOSTAL	KK1 (locking system)	02712-15-03 366
MARQUARDT	DC12A (locking system)	01333-17-02 930
MARQUARDT	DC12B (locking system)	01395-11-02 930

Manufacturer	Model designation	Radio equipment approval number
MARQUARDT	DC12K (locking system)	01392-11-02 930
MARQUARDT	MS2 (locking system)	00616-17-02 930
MARQUARDT	MS4 (locking system)	06218-19-02 930
MARQUARDT	MS5 (locking system)	11149-20-02 930
MARQUARDT	3350.38 (locking system)	03149-19-02 930
MARQUARDT	MK1 (locking system)	03756-15-02 930

Manufacturer	Model designation	Radio equipment approval number
MARQUARDT	MK2 (locking system)	03757-15-02 930
WITTE-Velbert	SDHTAG3NFC (locking system)	03034-20-07 018

Further specific notes

Rear Seat Entertainment System:

This system is not protected against harmful interference and must not cause interference in properly approved systems.

This product is approved by ANATEL in accordance with the procedures set out in Resolution 242/2000 and complies with the relevant technical requirements. Further information can be found on the https://www.anatel.gov.br

Brunei Darussalam

Regulatory radio identification

Manufacturer	Model designation	Radio equipment approval number
ADC	ARS4-C (radar sensor)	DTA-004005
Bosch	FR5CPCCF (radar sensor)	DTA-004222
Bosch	LRR3 (radar sensor)	DTA-011039
Bosch	MRR1Rear (radar sensor)	DTA-006601
Bosch	MRRe14FCR (radar sensor)	DTA-006678

Manufacturer	Model designation	Radio equipment approval number
Continental Antenna	RKE213E1 (antenna amplifier)	DTA-006665
Continental Antenna	RKE223E1GN S (antenna amplifier)	DTA-004998
Continental Automotive	CMKG1 (locking system)	DTA-005043
Continental Automotive	CMKG2 (locking system)	DTA-023993
Continental Automotive	MARS Keyless (locking system)	DTA-017264

Manufacturer	Model designation	Radio equipment approval number
HELLA	DM4 (locking system)	DTA-020187
Hirschmann	920287A (locking system)	DTA-001661
Hirschmann	920287B (locking system)	DTA-000794
Hirschmann	920702A (locking system)	DTA-018051
Huf Baolong	TSSRE4A (tire pressure sensor)	DTA-000310

Manufacturer	Model designation	Radio equipment approval number
Huf Baolong	TSSSG4G6b (tire pressure monitoring system control unit)	DTA-003757
HUF	HUF13145 (locking system)	DTA-017926
HUF	HUF14632 (locking system)	DTA-006138
HUF	HUF4761 (locking system)	DTA-000615

Manufacturer	Model designation	Radio equipment approval number
LEOPOLD KOSTAL	KK1 (locking system)	DTA-007245
MARQUARDT	DC12A (locking system)	DTA-019403
MARQUARDT	DC12B (locking system)	DTA-000068
MARQUARDT	DC12K (locking system)	DTA-000066
MARQUARDT	MS2 (locking system)	LPD-38890
MARQUARDT	MS4 (locking system)	DTA-003525

Manufacturer	Model designation	Radio equipment approval number
MARQUARDT	MS5 (locking system)	DTA-005850
MARQUARDT	MK1 (locking system)	DTA-011312
MARQUARDT	MK2 (locking system)	DTA-011313
MARQUARDT	3350.38 (locking system)	DTA-003662
Schrader	AG5SP4 (tire pressure sensor)	LPD-29665

Manufacturer	Model designation	Radio equipment approval number
Schrader	AG3PF4 (tire pressure sensor)	LPD-29665
Schrader	BG3FP4 (tire pressure sensor)	DRQ-D-JATI-07-2000-109000
Schrader	DG6W2D4 (tire pressure sensor)	DTA-001514
Schrader	MFR (tire pressure monitoring system control unit)	DTA No. 003893

Manufacturer	Model designation	Radio equipment approval number
Schrader	MFR3 (tire pressure monitoring system control unit)	DRQ-D-MAJU-02-2011-111083
Veoneer	77V12BSM (radar sensor)	DTA-004000
Veoneer	77V12CRN (radar sensor)	DTA-003999
Veoneer	77V125CRN (radar sensor)	DTA-010423

Manufacturer	Model designation	Radio equipment approval number
Veoneer	77GHz MMRV1 (radar sensor)	DTA-006216
WITTE-Velbert	SDHTAG3NFC (locking system)	DTA-005628

Eurasian Economic Union

Regulatory radio identification

Manufacturer	Model designation
ADC	ARS4-A (radar sensor)
ADC	ARS4-C (radar sensor)
Bosch	FR5CPCCF (radar sensor)
Bosch	LRR3 (radar sensor)
Bosch	MRR1Rear (radar sensor)
Bosch	MRRe14FCR (radar sensor)
Continental Antenna	RKE213E1 (antenna amplifier)

Manufacturer	Model designation
Continental Antenna	RKE223E1GNS (antenna amplifier)
Continental Automotive	MARS Keyless (locking system)
Continental Automotive	CMKG1 (locking system)
Continental Automotive	CMKG2 (locking system)
HELLA	DM4 (locking system)
Hirschmann	920287A (locking system)
Hirschmann	920287B (locking system)

Manufacturer	Model designation
Hirschmann	920702A (locking system)
Huf Baolong	TSSRE4A (tire pressure sensor)
HUF	HUF13145 (locking system)
HUF	HUF4761 (locking system)
HUF	HUF14632 (locking system)
LEOPOLD KOSTAL	KK1 (locking system)
MARQUARDT	DC12A (locking system)

Manufacturer	Model designation
MARQUARDT	DC12B (locking system)
MARQUARDT	DC12K (locking system)
MARQUARDT	MS2 (locking system)
MARQUARDT	MS4 (locking system)
MARQUARDT	MS5 (locking system)
MARQUARDT	MK1 (locking system)
MARQUARDT	MK2 (locking system)
MARQUARDT	3350.38 (locking system)
Schrader	AG5SP4 (tire pressure sensor)

Manufacturer	Model designation
Schrader	AG3PF4 (tire pressure sensor)
Schrader	BG3FP4 (tire pressure sensor)
Schrader	GG4T (tire pressure sensor)
Schrader	DG6W2D4 (tire pressure sensor)
Veoneer	77GHz MMRV1 (radar sensor)
Veoneer	77V12BSM (radar sensor)
Veoneer	77V12CRN (radar sensor)

Manufacturer	Model designation
Veoneer	77V125CRN (radar sensor)
WITTE-Velbert	SDHTAG3NFC (locking system)

Ghana

Regulatory radio identification

Manufacturer	Model designation	Radio equipment approval number
		NCA APPROVED
ADC	ARS4-C (radar sensor)	ZRO-1H-7E3-152
Bosch	FR5CPCCF (radar sensor)	ZRO-M8-7E3-230
Continental Antenna	RKE213E1 (antenna amplifier)	ZRO-M8-7E3-X53
Continental Antenna	RKE223E1GNS (antenna amplifier)	ZRO-M8-7E3-225
Continental Automotive	CMKG1 (locking system)	ZRO-M8-7E3-277
Continental Automotive	CMKG2 (locking system)	7M-7E7-X25-DSR
Continental Automotive	MARS Keyless (locking system)	BR3-1M-GE2-16A
HELLA	DM4 (locking system)	BR3-1M-GE2-157

Manufacturer	Model designation	Radio equipment approval number
Hirschmann	920287A (locking system)	ZRO-M8-7E3-X45
Hirschmann	920287B (locking system)	ZRO-M8-7E3-X47
HUF	HUF13145 (locking system)	7E6-M1-X14-SRD
HUF	HUF4761 (locking system)	EX6-6M-GE2-16C
LEOPOLD KOSTAL	KK1 (locking system)	ZRO-M8-7E3-X49
MARQUARDT	DC12A (locking system)	ZRO-M8-7E3-X50
MARQUARDT	DC12B (locking system)	ZRO-M8-7E3-X51
MARQUARDT	DC12K (locking system)	ZRO-M8-7E3-X52
MARQUARDT	MS2 (locking system)	BR3-1M-GE-129
MARQUARDT	MS4 (locking system)	ZRO-1H-7E3-26E
MARQUARDT	MS5 (locking system)	SRO-1M-7E4-11B
MARQUARDT	MK1 (locking system)	ZRO-M8-7E3-X4A
MARQUARDT	MK2 (locking system)	ZRO-M8-7E3-X4C
MARQUARDT	3350.38 (locking system)	ZRO-M8-7E3-X3C
Veoneer	77V12BSM (radar sensor)	ZRO-1H-7E3-142
Veoneer	77V12CRN (radar sensor)	ZRO-M8-7E3-230
Veoneer	77V125CRN (radar sensor)	7E5-7M-X72-RDR
WITTE-Velbert	SDHTAG3NFC (locking system)	SRO-1M-7E4-X59

Indonesia

Regulatory radio identification

Manufacturer	Model designation	Radio equipment approval number
ADC	ARS4-C (radar sensor)	68676/SDPPI/2020 7163
ADC	ARS4-A (radar sensor)	70266/SDPPI/2020 7163
Bosch	LRR3 (radar sensor)	74264/SDPPI/2021 7163
Bosch	MRR1Rear (radar sensor)	74267/SDPPI/2021 7163
Bosch	MRRevo14F (radar sensor)	74265/SDPPI/2021 7163
Bosch	MRRe14FCR (radar sensor)	74266/SDPPI/2021 7163

Manufacturer	Model designation	Radio equipment approval number
Bosch	FR5CPCCF (radar sensor)	67882/ SDPPI/2020 7163  Dilarang melakukan perubahan spesifikasi yang dapat menimbulkan gangguan fisik dan/atau elektromagnetik terhadap lingkungan sekitarnya

Manufacturer	Model designation	Radio equipment approval number
		

Manufacturer	Model designation	Radio equipment approval number
Continental Antenna	RKE213E1 (antenna amplifier)	76621/ SDPPI/2021 7163  Dilarang melakukan perubahan spesifikasi yang dapat menimbulkan gangguan fisik dan/atau elektromagnetik terhadap lingkungan sekitarnya

Manufacturer	Model designation	Radio equipment approval number

Manufacturer	Model designation	Radio equipment approval number
Continental Antenna	RKE223E1GNS (antenna amplifier)	86957/ SDPPI/ 2022 10325  Dilarang melakukan perubahan spesifikasi yang dapat menimbulkan gangguan fisik dan/atau elektromagnetik terhadap lingkungan sekitarnya

Manufacturer	Model designation	Radio equipment approval number

Manufacturer	Model designation	Radio equipment approval number
Continental Automotive	CMKG1 (locking system)	87836/SDPPI/2023 7163 ⚠ Dilarang melakukan perubahan spesifikasi yang dapat menimbulkan gangguan fisik dan/atau elektromagnetik terhadap lingkungan sekitarnya

Manufacturer	Model designation	Radio equipment approval number

Manufacturer	Model designation	Radio equipment approval number
Continental Automotive	MARS Keyless (locking system)	69379/SDPPI/2020 7163 ⚠ Dilarang melakukan perubahan spesifikasi yang dapat menimbulkan gangguan fisik dan/atau elektromagnetik terhadap lingkungan sekitarnya

Manufacturer	Model designation	Radio equipment approval number

Manufacturer	Model designation	Radio equipment approval number
Continental Automotive	D-WMI2020A (control unit)	66678/ SDPPI/2020 7163 Dilarang melakukan perubahan spesifikasi yang dapat menimbulkan gangguan fisik dan/atau elektromagnetik terhadap lingkungan sekitarnya

Manufacturer	Model designation	Radio equipment approval number

Manufacturer	Model designation	Radio equipment approval number
Continental Automotive	NTG7 MID (Headunit)	70732/ SDPPI/2020 7163  Dilarang melakukan perubahan spesifikasi yang dapat menimbulkan gangguan fisik dan/atau elektromagnetik terhadap lingkungan sekitarnya

Manufacturer	Model designation	Radio equipment approval number
		

Manufacturer	Model designation	Radio equipment approval number
Continental Automotive	NTG7 HIGH (Headunit)	70733/ SDPPI/2020 7163  Dilarang melakukan perubahan spesifikasi yang dapat menimbulkan gangguan fisik dan/atau elektromagnetik terhadap lingkungan sekitarnya

Manufacturer	Model designation	Radio equipment approval number

Manufacturer	Model designation	Radio equipment approval number
Continental Automotive	NTG7 PREMIUM (Headunit)	70731/SDPPI/2020 7163  Dilarang melakukan perubahan spesifikasi yang dapat menimbulkan gangguan fisik dan/atau elektromagnetik terhadap lingkungan sekitarnya

Manufacturer	Model designation	Radio equipment approval number

Manufacturer	Model designation	Radio equipment approval number
Continental Automotive	NTG7 PREMIUM PLUS (Headunit)	70734/SDPPI/2020 7163  Dilarang melakukan perubahan spesifikasi yang dapat menimbulkan gangguan fisik dan/atau elektromagnetik terhadap lingkungan sekitarnya

Manufacturer	Model designation	Radio equipment approval number
		

Manufacturer	Model designation	Radio equipment approval number
Harman Becker	NTG6N ENTRY/MID (Headunit) Production: Germany	64019/SDPPI/2019 7163  Dilarang melakukan perubahan spesifikasi yang dapat menimbulkan gangguan fisik dan/atau elektromagnetik terhadap lingkungan sekitarnya

Manufacturer	Model designation	Radio equipment approval number

Manufacturer	Model designation	Radio equipment approval number
Harman Becker	NTG6N HIGH (Headunit) Production: Germany	64018/ SDPPI/2019 7163 Dilarang melakukan perubahan spesifikasi yang dapat menimbulkan gangguan fisik dan/atau elektromagnetik terhadap lingkungan sekitarnya

Manufacturer	Model designation	Radio equipment approval number

Manufacturer	Model designation	Radio equipment approval number
Harman Becker	NTG6N ENTRY/MID (Headunit) Production: Hungary	63775/ SDPPI/2019 7163  Dilarang melakukan perubahan spesifikasi yang dapat menimbulkan gangguan fisik dan/atau elektromagnetik terhadap lingkungan sekitarnya

Manufacturer	Model designation	Radio equipment approval number
		

Manufacturer	Model designation	Radio equipment approval number
Harman Becker	NTG6N HIGH (Headunit) Production: Hungary	63774/ SDPPI/2019 7163  Dilarang melakukan perubahan spesifikasi yang dapat menimbulkan gangguan fisik dan/atau elektromagnetik terhadap lingkungan sekitarnya

Manufacturer	Model designation	Radio equipment approval number

Manufacturer	Model designation	Radio equipment approval number
Harman Becker	NTG7 MID (Headunit)	65544/ SDPPI/2020 7163 ⚠ Dilarang melakukan perubahan spesifikasi yang dapat menimbulkan gangguan fisik dan/atau elektromagnetik terhadap lingkungan sekitarnya

Manufacturer	Model designation	Radio equipment approval number

Manufacturer	Model designation	Radio equipment approval number
Harman Becker	NTG7 HIGH (Headunit)	70513/ SDPPI/2020 7163  Dilarang melakukan perubahan spesifikasi yang dapat menimbulkan gangguan fisik dan/atau elektromagnetik terhadap lingkungan sekitarnya

Manufacturer	Model designation	Radio equipment approval number
		

Manufacturer	Model designation	Radio equipment approval number
Harman Becker	NTG7 PREMIUM (Headunit)	65543/ SDPPI/2020 7163  Dilarang melakukan perubahan spesifikasi yang dapat menimbulkan gangguan fisik dan/atau elektromagnetik terhadap lingkungan sekitarnya

Manufacturer	Model designation	Radio equipment approval number

Manufacturer	Model designation	Radio equipment approval number
Harman Becker	NTG7 PREMIUM PLUS (Headunit)	70512/SDPPI/2020 7163 ⚠ Dilarang melakukan perubahan spesifikasi yang dapat menimbulkan gangguan fisik dan/atau elektromagnetik terhadap lingkungan sekitarnya

Manufacturer	Model designation	Radio equipment approval number

Manufacturer	Model designation	Radio equipment approval number
Harman Becker	NTG7 RSU (control unit)	66387/ SDPPI/2020 7163  Dilarang melakukan perubahan spesifikasi yang dapat menimbulkan gangguan fisik dan/atau elektromagnetik terhadap lingkungan sekitarnya

Manufacturer	Model designation	Radio equipment approval number
		

Manufacturer	Model designation	Radio equipment approval number
HELLA	DM4 (locking system)	69378/ SDPPI/2020 7163  Dilarang melakukan perubahan spesifikasi yang dapat menimbulkan gangguan fisik dan/atau elektromagnetik terhadap lingkungan sekitarnya

Manufacturer	Model designation	Radio equipment approval number
Huf Baolong	TSSRE4A (tire pressure sensor)	72438/SDPPI/2021 7163

Manufacturer	Model designation	Radio equipment approval number
Hirschmann	920287A (locking system)	71369 / SDPPI/2020 7163 Dilarang melakukan perubahan spesifikasi yang dapat menimbulkan gangguan fisik dan/atau elektromagnetik terhadap lingkungan sekitarnya

Manufacturer	Model designation	Radio equipment approval number

Manufacturer	Model designation	Radio equipment approval number
Hirschmann	920287B (locking system)	72974 / SDPPI/2021 7163 ⚠ Dilarang melakukan perubahan spesifikasi yang dapat menimbulkan gangguan fisik dan/atau elektromagnetik terhadap lingkungan sekitarnya

Manufacturer	Model designation	Radio equipment approval number

Manufacturer	Model designation	Radio equipment approval number
Hirschmann	920702A (locking system)	82675/ SDPPI/2022 7163 ⚠ Dilarang melakukan perubahan spesifikasi yang dapat menimbulkan gangguan fisik dan/atau elektromagnetik terhadap lingkungan sekitarnya

Manufacturer	Model designation	Radio equipment approval number

Manufacturer	Model designation	Radio equipment approval number
HUF	HUF14632 (locking system)	78368/SDPPI/2021 7163  Dilarang melakukan perubahan spesifikasi yang dapat menimbulkan gangguan fisik dan/atau elektromagnetik terhadap lingkungan sekitarnya

Manufacturer	Model designation	Radio equipment approval number

Manufacturer	Model designation	Radio equipment approval number
HUF	HUF4761 (locking system)	26742/ SDPPI/2015 3533  Dilarang melakukan perubahan spesifikasi yang dapat menimbulkan gangguan fisik dan/atau elektromagnetik terhadap lingkungan sekitarnya

Manufacturer	Model designation	Radio equipment approval number
		

Manufacturer	Model designation	Radio equipment approval number
HUF	HUF13145 (NFC reader)	83988/ SDPPI/2022  Dilarang melakukan perubahan spesifikasi yang dapat menimbulkan gangguan fisik dan/atau elektromagnetik terhadap lingkungan sekitarnya

Manufacturer	Model designation	Radio equipment approval number
LEOPOLD KOSTAL	KK1 (locking system)	41121/SDPPI/2018 5125

Manufacturer	Model designation	Radio equipment approval number
MARQUARDT	DC12A (locking system)	67373/SDPPI/2020 7163  Dilarang melakukan perubahan spesifikasi yang dapat menimbulkan gangguan fisik dan/atau elektromagnetik terhadap lingkungan sekitarnya

Manufacturer	Model designation	Radio equipment approval number

Manufacturer	Model designation	Radio equipment approval number
MARQUARDT	DC12B (locking system)	80676/SDPPI/2022 7163  Dilarang melakukan perubahan spesifikasi yang dapat menimbulkan gangguan fisik dan/atau elektromagnetik terhadap lingkungan sekitarnya

Manufacturer	Model designation	Radio equipment approval number
		

Manufacturer	Model designation	Radio equipment approval number
MARQUARDT	DC12K (locking system)	80621/SDPPI/2022 7163  Dilarang melakukan perubahan spesifikasi yang dapat menimbulkan gangguan fisik dan/atau elektromagnetik terhadap lingkungan sekitarnya

Manufacturer	Model designation	Radio equipment approval number

Manufacturer	Model designation	Radio equipment approval number
MARQUARDT	MS2 (locking system)	67372/SDPPI/2020 7163  Dilarang melakukan perubahan spesifikasi yang dapat menimbulkan gangguan fisik dan/atau elektromagnetik terhadap lingkungan sekitarnya

Manufacturer	Model designation	Radio equipment approval number

Manufacturer	Model designation	Radio equipment approval number
MARQUARDT	MS4 (locking system)	64126/SDPPI/2019 7163 ⚠ Dilarang melakukan perubahan spesifikasi yang dapat menimbulkan gangguan fisik dan/atau elektromagnetik terhadap lingkungan sekitarnya

Manufacturer	Model designation	Radio equipment approval number

Manufacturer	Model designation	Radio equipment approval number
MARQUARDT	MS5 (locking system)	69077/SDPPI/2020 7163 7163 ⚠ Dilarang melakukan perubahan spesifikasi yang dapat menimbulkan gangguan fisik dan/atau elektromagnetik terhadap lingkungan sekitarnya

Manufacturer	Model designation	Radio equipment approval number

Manufacturer	Model designation	Radio equipment approval number
MARQUARDT	MK1 (locking system)	75282/ SDPPI/ 2021 7163  Dilarang melakukan perubahan spesifikasi yang dapat menimbulkan gangguan fisik dan/atau elektromagnetik terhadap lingkungan sekitarnya

Manufacturer	Model designation	Radio equipment approval number

Manufacturer	Model designation	Radio equipment approval number
MARQUARDT	MK2 (locking system)	75285/ SDPPI/ 2021 7163  Dilarang melakukan perubahan spesifikasi yang dapat menimbulkan gangguan fisik dan/atau elektromagnetik terhadap lingkungan sekitarnya

Manufacturer	Model designation	Radio equipment approval number
		

Manufacturer	Model designation	Radio equipment approval number
MARQUARDT	3350.38 (locking system)	82980/ SDPPI/2022 7163  Dilarang melakukan perubahan spesifikasi yang dapat menimbulkan gangguan fisik dan/atau elektromagnetik terhadap lingkungan sekitarnya

Manufacturer	Model designation	Radio equipment approval number

Manufacturer	Model designation	Radio equipment approval number
Molex	WCH-302b (control unit)	71668/ SDPPI/2020 7163 Dilarang melakukan perubahan spesifikasi yang dapat menimbulkan gangguan fisik dan/atau elektromagnetik terhadap lingkungan sekitarnya

Manufacturer	Model designation	Radio equipment approval number

Manufacturer	Model designation	Radio equipment approval number
Molex	WCH-302d (control unit)	71220/ SDPPI/2020 7163  Dilarang melakukan perubahan spesifikasi yang dapat menimbulkan gangguan fisik dan/atau elektromagnetik terhadap lingkungan sekitarnya

Manufacturer	Model designation	Radio equipment approval number
		

Manufacturer	Model designation	Radio equipment approval number
Molex	WCH-302e (control unit)	71669/ SDPPI/2020 7163  Dilarang melakukan perubahan spesifikasi yang dapat menimbulkan gangguan fisik dan/atau elektromagnetik terhadap lingkungan sekitarnya

Manufacturer	Model designation	Radio equipment approval number

Manufacturer	Model designation	Radio equipment approval number
Panasonic	DAIRSE (control unit)	63550/SDPPI/2019 Dilarang melakukan perubahan spesifikasi yang dapat menimbulkan gangguan fisik dan/atau elektromagnetik terhadap lingkungan sekitarnya

Manufacturer	Model designation	Radio equipment approval number
Schrader	GG4T (tire pressure sensor)	72023/SDPPI/2020 9338
Schrader	AG5SP4 (tire pressure sensor)	75465/SDPPI/2021 7163

Manufacturer	Model designation	Radio equipment approval number
Schrader	BG3FP4 (tire pressure sensor)	72765/SDPP/2021 7163
Schrader	DG6W2D4 (tire pressure sensor)	57058/SDPPI/2018 3612
Schrader	MC34MA4 (tire pressure monitoring system control unit)	25626/SDPPI/2015 3612

Manufacturer	Model designation	Radio equipment approval number
Schrader	AG3PF4 (tire pressure sensor)	62396/SDPPI/2020 7163
Schrader	GG4T (tire pressure sensor)	72023/SDPPI/2020 7163

Manufacturer	Model designation	Radio equipment approval number
Veoneer	77GHz MMRV1 (radar sensor)	74749/SDPPI/2021 7163
Veoneer	77V12CRN (radar sensor)	66830/SDPPI/2020 7163

Manufacturer	Model designation	Radio equipment approval number
Veoneer	77V125CRN (radar sensor)	78366/ SDPPI/2021 7163

Manufacturer	Model designation	Radio equipment approval number
Veoneer	77V12BSM (radar sensor)	66792/ SDPPI/2020 7163

Manufacturer	Model designation	Radio equipment approval number
WITTE-Velbert	SDHTAG3NFC (locking system)	67233/ SDPPI/2020 10325  Dilarang melakukan perubahan spesifikasi yang dapat menimbulkan gangguan fisik dan/atau elektromagnetik terhadap lingkungan sekitarnya

Manufacturer	Model designation	Radio equipment approval number
		

Israel

Regulatory radio identification

Manufacturer	Model designation	Radio equipment approval number
		Approval number of the Ministry of Communications:
ADC	ARS4-A (radar sensor)	55-09697
ADC	ARS4-C (radar sensor)	55-07525
Bosch	FR5CPCCF (radar sensor)	55-08783
Bosch	LRR3 (radar sensor)	55-08334
Bosch	MRR1Rear (radar sensor)	55-08333
Bosch	MRRe14FCR (radar sensor)	55-08395
Continental Antenna	RKE213E1 (antenna amplifier)	55-13929
Continental Automotive	D-WMI2017B (control unit)	51-75654
Continental Automotive	D-WMI2017A (control unit)	51-75367
Continental Automotive	D-WMI2016A (control unit)	55-08177
Continental Automotive	D-WMI2020A (control unit)	55-08179
Continental Automotive	RKE213E1 (Antennenverstärker)	55-13929
Continental Automotive	RKE223E1GNS (Antennenverstärker)	51-70799
Continental Automotive	CMKG1 (Schließsystem)	51-87871

Manufacturer	Model designation	Radio equipment approval number
Continental Automotive	MARS Keyless (Schließsystem)	55-13749
Harman Becker	NTG7 HIGH-IL (Headunit)	51-89476
Harman Becker	NTG7 PREMIUMPLUS-IL (Headunit)	51-89475
HELLA	DM4 (Schließsystem)	55-14271
Hirschmann	920287A (Schließsystem)	51-62759
Hirschmann	920287B (Schließsystem)	51-49357
Hirschmann	920702A (Schließsystem)	55-12320
Huf Baolong	TSSRE4A (tire pressure sensor)	63-63571
Huf Baolong	TSSSG4G6b (tire pressure monitoring system control unit)	63-66757
HUF	HUF13145 (locking system)	55-14153
LEOPOLD KOSTAL	KK1 (locking system)	51-87872
MARQUARDT	DC12A (locking system)	55-13847
MARQUARDT	DC12B (locking system)	55-12215
MARQUARDT	DC12K (locking system)	55-12214
MARQUARDT	MS2 (locking system)	51-85192
MARQUARDT	MS5 (locking system)	51-86840
MARQUARDT	3350.38 (locking system)	55-14331

Manufacturer	Model designation	Radio equipment approval number
Schrader	AG3PF4 (tire pressure sensor)	51-78338
Schrader	AG5SP4 (tire pressure sensor)	51-73152
Schrader	BG3FP4 (tire pressure sensor)	51-77898
Schrader	DG6W2D4 (tire pressure sensor)	51-64111
Schrader	GG4T (tire pressure sensor)	55-09441
Schrader	MC34MA4 (tire pressure monitoring system control unit)	51-29611
Schrader	MFR (tire pressure monitoring system control unit)	55-06040
Schrader	MFR3 (tire pressure monitoring system control unit)	51-79817
Veoneer	77V12BSM (radar sensor)	55-08176
Veoneer	77V12CRN (radar sensor)	55-08301
WITTE-Velbert	SDHTAG3NFC (locking system)	55-12216

Jamaica

Regulatory radio identification

Manufacturer	Model designation
Continental Automotive	CMKG1 (locking system)
Continental Automotive	CMKG2 (locking system)
Continental Automotive	RKE213E1 (antenna amplifier)
Continental Automotive	RKE223E1GNS (antenna amplifier)

Manufacturer	Model designation
Continental Automotive	MARS Keyless (locking system)
Hirschmann	920287A (locking system)
Hirschmann	920287B (locking system)
Hirschmann	920702A (locking system)
HELLA	DM4 (locking system)
HUF	HUF13145 (locking system)
LEOPOLD KOSTAL	KK1 (locking system)
MARQUARDT	DC12A (locking system)
MARQUARDT	DC12B (locking system)

Manufacturer	Model designation
MARQUARDT	DC12K (locking system)
MARQUARDT	MS2 (locking system)
MARQUARDT	MS4 (locking system)
MARQUARDT	MS5 (locking system)
MARQUARDT	MK1 (locking system)
MARQUARDT	MK2 (locking system)
MARQUARDT	3350.38 (locking system)
WITTE-Velbert	SDHTAG3NFC (locking system)

Japan

Regulatory radio identification



Manufacturer	Model designation	Radio equipment approval number
Sennheiser	M3IETW2R (Earbud)	201-190814 (R)
Sennheiser	M3IETW2L (Earbud)	201-190815 (L)
Sennheiser	BTT100 (Bluetooth Audio Transmitter)	020-180077

Canada

Regulatory radio identification

Manufacturer	Model designation	Radio equipment approval number
Sennheiser	M3IETW2R (Earbud)	IC:2099A-M3IETW2R
Sennheiser	M3IETW2L (Earbud)	IC:2099A-M3IETW2L
Sennheiser	BTT100 (Bluetooth Audio Transmitter)	IC:2099A-BTT100
Sennheiser	M3IETW2 C (Charging Case)	CAN ICS-3(B)/ NMB-3(B)

Kuwait

Regulatory radio identification

Manufacturer	Model designation	Radio equipment approval number
Sennheiser	M3IETW2 (Momentum True Wireless 2)	Ref. 4870
Sennheiser	BTT100 (Bluetooth Audio Transmitter)	Ref. 4871

Malaysia

Regulatory radio identification

Manufacturer	Model designation	Radio equipment approval number
ADC	ARS4-C (radar sensor)	HIDF15000153
Bosch	FR5CPCCF (radar sensor)	CIDF15000490
Bosch	LRR3 (radar sensor)	CIDF15000490
Bosch	MRR1Rear (radar sensor)	CIDF15000490
Bosch	MRRe14FCR (radar sensor)	CIDF15000490

Manufacturer	Model designation	Radio equipment approval number
Bosch	MRRevo14F (radar sensor)	CIDF15000490
Continental Antenna	RKE213E1 (antenna amplifier)	HIDF15000153
Continental Antenna	RKE223E1GNS (antenna amplifier)	HIDF16000136
Continental Automotive	CMKG1 (locking system)	HIDF15000153
Continental Automotive	MARS Keyless (locking system)	CIDF15000578

Manufacturer	Model designation	Radio equipment approval number
Continental Automotive	UWBTRX1 (locking system)	HIDF15000153
Continental Automotive	D-WMI2020A (control unit)	RGEZ/12A/1019/S(19-4128)
HELLA	DM4 (locking system)	CIDF15000578
Hirschmann	920287A (locking system)	RAUU/63A/0311/S(11-0432)
Hirschmann	920287B (locking system)	RAUU/22C/0615/S(15-1864)

Manufacturer	Model designation	Radio equipment approval number
Hirschmann	920702A (locking system)	HIDF15000153
Huf Baolong	TSSRE4A (tire pressure sensor)	CIDF17000184
HUF	HUF13145 (locking system)	RFBY/09A/0422/S(22-1843)
HUF	HUF14632 (locking system)	RAYN/25A/0715/S(15-2385)

Manufacturer	Model designation	Radio equipment approval number
HUF	HUF4761 (locking system)	RAAU/16B/1112/S(12-2053)
LEOPOLD KOSTAL	KK1 (locking system)	HIDF15000153
MARQUARDT	DC12A (locking system)	RDDK/33A/0317/S(17-0669)
MARQUARDT	DC12B (locking system)	RAUU/62A/0311/S(11-0263)
MARQUARDT	DC12K (locking system)	RAUU/62A/0311/S(11-0264)

Manufacturer	Model designation	Radio equipment approval number
MARQUARDT	MS2 (locking system)	RDDK/31A/0217/S(17-0405)
MARQUARDT	MS4 (locking system)	RDDK/25B/1019/S(19-0943)
MARQUARDT	MS5 (locking system)	RGLO/02A/0720/S(20-2580)
MARQUARDT	MK1 (locking system)	CIDF19000029
MARQUARDT	MK2 (locking system)	CIDF19000029

Manufacturer	Model designation	Radio equipment approval number
MARQUARDT	3350.38 (locking system)	CIDF19000029
Meta System	ITS/TPS (interior protection)	RAVG/18Q/0212/S(11-2068)
Meta System	MUW II (interior protection)	RAVG/17Q/0212/S(11-2067)
Schrader	AG5SP4 (tire pressure sensor)	RCDD/03A/0615/S(19-2094)

Manufacturer	Model designation	Radio equipment approval number
Schrader	AG3PF4 (tire pressure sensor)	RBEF/28A/0419/S/(19-1542)
Schrader	BG3FP4 (tire pressure sensor)	RBEF/51A/0121/S/(20-5642)
Schrader	MFR (tire pressure monitoring system control unit)	RAQP/62A/0419/S(19-1694)

Manufacturer	Model designation	Radio equipment approval number
Schrader	MFR3 (tire pressure monitoring system control unit)	RAQP/62A/0419/S(19-1694)
Veoneer	77GHz MMRV1 (radar sensor)	HIDF15000153
Veoneer	77V12BSM (radar sensor)	HIDF15000153
Veoneer	77V12CRN (radar sensor)	HIDF15000153

Manufacturer	Model designation	Radio equipment approval number
Veoneer	77V125CRN (radar sensor)	HIDF15000153
WITTE-Velbert	SDHTAG3NFC (locking system)	RDDK/43B/0420/S(20-1749)

Morocco

Regulatory radio identification

Manufacturer	Model designation	Radio equipment approval number
		AGREE PAR L'ANRT MAROC
ADC	ARS4-A (radar sensor)	MR 9490 ANTR 2014-07-23
ADC	ARS4-C (radar sensor)	MR 20231 ANRT 2019-06-27
Bosch	FR5CPCCF (radar sensor)	MR 20575 ANRT 2019-07-29
Bosch	LRR3 (radar sensor)	MR 5371 ANRT 2010 2019-12-05
Bosch	MRR1Rear (radar sensor)	MR 9186 ANTR 2014-04-22
Bosch	MRRe14FCR (radar sensor)	MR 13900 ANTR 2017-05-04
Continental Antenna	RKE213E1 (antenna amplifier)	MR 10631 ANTR 2015-07-16
Continental Antenna	RKE223E1GNS (antenna amplifier)	MR 21174 ANTR 2019-10-14
Continental Automotive	CMKG1 (locking system)	MR 21701 ANTR 2019-12-05
Continental Automotive	CMKG2 (locking system)	MR 36542 ANRT 2023-02-01
Continental Automotive	MARS Keyless (locking system)	MR 13681 ANTR 2017-04-04
HELLA	DM4 (locking system)	MR 14426 ANTR 2017-07-28
Hirschmann	920287A (locking system)	MR 6700 ANTR 2011-11-16
Hirschmann	920287B (locking system)	MR 7260 ANTR 2012-06-13
Hirschmann	920702A (locking system)	MR 32214 ANTR 2022-03-08

Manufacturer	Model designation	Radio equipment approval number
Huf Baolong	TSSRE4A (tire pressure monitoring system control unit)	MR 14320 ANTR 2017-07-07
Huf Baolong	TSSSG4G6b (tire pressure monitoring system control unit)	MR 19561 ANTR 2019-04-26
HUF	HUF13145 (locking system)	MR 32395 ANRT 2022-03-24
HUF	HUF14632 (locking system)	MR 10506 ANTR 2015-06-22
HUF	HUF4761 (locking system)	MR 7829 ANTR 2013-02-14
LEOPOLD KOSTAL	KK1 (locking system)	MR 10697 ANTR 2015-08-05
MARQUARDT	DC12A (locking system)	MR 13429 ANTR 2017-03-03
MARQUARDT	DC12B (locking system)	MR 6698 ANTR 2021-11-04
MARQUARDT	DC12K (locking system)	MR 6699 ANTR 2021-11-04
MARQUARDT	MS2 (locking system)	MR 13300 ANTR 2017-02-15
MARQUARDT	MS4 (locking system)	MR 19199 ANTR 2019-03-25
MARQUARDT	MS5 (locking system)	MR 23805 ANRT 2020-04-22
MARQUARDT	MK1 (locking system)	MR 10645 ANTR 2015-07-21
MARQUARDT	MK2 (locking system)	MR 10987 ANTR 2015-10-22
MARQUARDT	3350.38 (locking system)	MR 18817 ANTR 2019-02-12
Schrader	AG5SP4 (tire pressure monitoring system control unit)	MR 10216 ANRT 2015

Manufacturer	Model designation	Radio equipment approval number
Schrader	AG3PF4 (tire pressure sensor)	MR 19241 ANRT 2019
Schrader	BG3FP4 (tire pressure sensor)	MR00026829 ANRT2020
Schrader	MFR (tire pressure monitoring system control unit)	MR 19527 ANRT 2019-04-30
Schrader	MFR3 (tire pressure monitoring system control unit)	MR 19527 ANRT 2019
Schrader	GG4T (tire pressure sensor)	MR 14777 ANRT 2017-09-20
Schrader	DG6W2D4 (tire pressure sensor)	MR 16355 ANRT 2018-04-19
Schrader	MC34MA4 (tire pressure monitoring system control unit)	MR 6706 ANRT 2011-11-17
Veoneer	77GHz MMRV1 (radar sensor)	MR 10436 ANRT 2015-05-25
Veoneer	77V12BSM (radar sensor)	MR 20097 ANRT 2019-06-14
Veoneer	77V12CRN (radar sensor)	MR 20149 ANRT 2019-06-19
Veoneer	77V125CRN (radar sensor)	MR 27966 ANRT 2021-03-29
WITTE-Velbert	SDHTAG3NFC (locking system)	MR 23310 ANRT 2020-03-10

Mexico

Regulatory radio identification

Manufacturer	Model designation	Radio equipment approval number
ADC	ARS4-A (radar sensor)	IFETEL: RCPCOAR14-1191
ADC	ARS4-C (radar sensor)	IFETEL: RLVCOR19-1062
Bosch	LRR3 (radar sensor)	IFETEL: RCPBOLR09-0828
Bosch	MRR1Rear (radar sensor)	IFETEL: RCPBOMR14-0922
Bosch	MRRe14FCR (radar sensor)	IFETEL: RCPBOMR17-0598
Continental Antenna	RKE213E1 (antenna amplifier)	IFETEL: RLVKARK15-1741
Continental Antenna	RKE223E1 (antenna amplifier)	IFETEL: RLVCORK19-2174
Continental Automotive	CMKG1 (locking system)	IFETEL: RCPCOCM19-2315
Continental Automotive	CMKG2 (locking system)	IFETEL: COCOCM22-31003
Continental Automotive	MARS Keyless (locking system)	IFETEL: RLVDAMA18-1827
Continental Automotive	UWBTRX1 (locking system)	IFETEL: MECOCM22-17609
Gentex	MUAHL 5 (convenience system)	IFETEL: RCPGEMU15-0448

Manufacturer	Model designation	Radio equipment approval number
HELLA	DM4 (locking system)	IFETEL: RLVHEDM17-10
Hirschmann	920287A (locking system)	IFETEL: RLVHI9211-0472
Hirschmann	920287B (locking system)	IFETEL: RLVHI9212-0608
Hirschmann	920702A (locking system)	IFETEL: RLVHI9222-2674

Manufacturer	Model designation	Radio equipment approval number
Huf Baolong	TSSRE4A (tire pressure sensor)	IFETEL: RLVHUTS17-0806
HUF	HUF13145 (locking system)	IFETEL: RCPHUHU22-2505
HUF	HUF14632 (locking system)	IFETEL: RLVHUHU15-1204
HUF	HUF4761 (locking system)	IFETEL: RLVHUHU12-1587

Manufacturer	Model designation	Radio equipment approval number
LEOPOLD KOSTAL	KK1 (locking system)	IFETEL: RLVKOKK15-0891
MARQUARDT	DC12A (locking system)	IFETEL: RLVMEDC17-0348
MARQUARDT	DC12B (locking system)	IFETEL: RLVMADC11-0446
MARQUARDT	DC12K (interior protection)	IFETEL: RLVMADC11-0446

Manufacturer	Model designation	Radio equipment approval number
MARQUARDT	MS2 (locking system)	IFETEL: RLVMAMS17-0222
MARQUARDT	MS4 (locking system)	IFETEL: RLVMAMS19-0449
MARQUARDT	MS5 (locking system)	IFETEL: RLVMEMS20-0957
MARQUARDT	MK1 (locking system)	IFETEL: RLVMAMK15-1042

Manufacturer	Model designation	Radio equipment approval number
MARQUARDT	MK2 (locking system)	IFETEL: RLVMAMK15-1043
MARQUARDT	3350.38 (locking system)	IFETEL: RCPMA3319-0530
Schrader	AG5SP4 (tire pressure sensor)	IFETEL: RCPSCAG15-0627
Schrader	AG3PF4 (tire pressure sensor)	IFETEL: RLVSCAG19-0705

Manufacturer	Model designation	Radio equipment approval number
Schrader	BG3FP4 (tire pressure sensor)	IFETEL: RLVSCBG21-0750
Schrader	MFR (tire pressure sensor)	IFETEL: RLVSCMF15-0959
Schrader	MFR3 (tire pressure sensor)	IFETEL: RLVSCMF19-0777
Schrader	GG4T (tire pressure sensor)	IFETEL: RLVSCGG17-1665

Manufacturer	Model designation	Radio equipment approval number
Schrader	DG6W2D4 (tire pressure sensor)	IFETEL: RLVSCDG18-04
Schrader	MC34MA4 (tire pressure monitoring system control unit)	IFETEL: RCPSCMR14-062
Sennheiser	M3IETW2R (Earbud)	IFETEL: RCPSEM320-0435-A1
Sennheiser	M3IETW2L (Earbud)	IFETEL: RCPSEM320-0435

Manufacturer	Model designation	Radio equipment approval number
Sennheiser	BTT100 (Bluetooth Audio Transmitter)	IFETEL: RCPSEBT18-1407
WITTE-Velbert	SDHTAG3NFC (locking system)	IFETEL: RCPWISD20-0943

Mongolia

Regulatory radio identification

Manufacturer	Model designation	Radio equipment approval number
Continental Automotive	CMKG1 (locking system)	A19000633
Continental Automotive	CMKG2 (locking system)	A23000900
Continental Automotive	MARS Keyless (locking system)	A18000328
HELLA	DM4 (locking system)	A18000329



Manufacturer	Model designation	Radio equipment approval number
Hirschmann	920702A (locking system)	A22000649
HUF	HUF13145 (locking system)	A22000674
MARQUARDT	DC12A (locking system)	A19000400
MARQUARDT	DC12B (locking system)	A19000371
MARQUARDT	DC12K (locking system)	A19000372



Manufacturer	Model designation	Radio equipment approval number
MARQUARDT	MS2 (locking system)	A18000289
MARQUARDT	MS4 (locking system)	A19000516
MARQUARDT	MS5 (locking system)	A20000085
MARQUARDT	MK1 (locking system)	A19000374
MARQUARDT	MK2 (locking system)	A19000374



Manufacturer	Model designation	Radio equipment approval number
MARQUARDT	3350.38 (locking system)	A19000401
WITTE-Velbert	SDHTAG3NFC (locking system)	A20000067

Niger

Regulatory radio identification

Manufacturer	Model designation	Radio equipment approval number
Continental Antenna	RKE213E1 (antenna amplifier)	029/ ARCEP/DG/19
Continental Automotive	MARS Keyless (locking system)	083/ ARCEP/DG/19
HELLA	DM4 (locking system)	082/ ARCEP/DG/19
Hirschmann	920287A (locking system)	097/ ARCEP/DG/19
Hirschmann	920287B (locking system)	098/ ARCEP/DG/19
HUF	HUF4761 (locking system)	053/ ARCEP/DG/19
LEOPOLD KOSTAL	KK1 (locking system)	037/ ARCEP/DG/19
MARQUARDT	DC12A (locking system)	010/ ARCEP/DG/19
MARQUARDT	DC12B (locking system)	008/ ARCEP/DG/19
MARQUARDT	DC12K (locking system)	009/ ARCEP/DG/19
MARQUARDT	MS2 (locking system)	014/ ARCEP/DG/19
MARQUARDT	MS4 (locking system)	HOMO-0096/ ARCEP/DG/2019
MARQUARDT	MK1 (locking system)	034/ ARCEP/DG/19
MARQUARDT	MK2 (locking system)	035/ ARCEP/DG/19
MARQUARDT	3350.38 (locking system)	015/ ARCEP/DG/19
MARQUARDT	MU1 (locking system)	HOMO-0095/ ARCEP/DG/2019

Nigeria

Regulatory radio identification

Manufacturer	Model designation
ADC	ARS4-A (radar sensor)
ADC	ARS4-C (radar sensor)
Bosch	FR5CPCCF (radar sensor)
Bosch	MRR1Rear (radar sensor)
Bosch	MRRe14FCR (radar sensor)
Continental Antenna	RKE213E1 (antenna amplifier)
Continental Antenna	RKE223E1GNS (antenna amplifier)
Continental Automotive	CMKG1 (locking system)
Continental Automotive	MARS Keyless (locking system)
HELLA	DM4 (locking system)
Hirschmann	920287A (locking system)
Hirschmann	920287B (locking system)
Hirschmann	920702A (locking system)
HUF	HUF13145 (locking system)
HUF	HUF14632 (locking system)
HUF	HUF4761 (locking system)
LEOPOLD KOSTAL	KK1 (locking system)
MARQUARDT	DC12A (locking system)
MARQUARDT	DC12B (locking system)
MARQUARDT	DC12K (locking system)
MARQUARDT	MS2 (locking system)
MARQUARDT	MS4 (locking system)
MARQUARDT	MS5 (locking system)
MARQUARDT	MK1 (locking system)
MARQUARDT	MK2 (locking system)
MARQUARDT	3350.38 (locking system)
Schrader	AG3PF4 (tire pressure sensor)

Manufacturer	Model designation
Schrader	BG3FP4 (tire pressure sensor)
Schrader	MFR3 (control unit)
Veoneer	77V12BSM (radar sensor)
Veoneer	77V12CRN (radar sensor)
Veoneer	77V125CRN (radar sensor)
WITTE-Velbert	SDHTAG3NFC (locking system)

Oman

Regulatory radio identification

Manufacturer	Model designation	Radio equipment approval number
ADC	ARS4-A (radar sensor)	TRA/TA-R/2016/14 D080134
ADC	ARS4-C (radar sensor)	TRA/TA-R/7769/19 D172338
Bosch	FR5CPCCF (radar sensor)	TRA/TA-R/7983/19 D172338
Bosch	LRR3 (radar sensor)	TRA/TA-R/1049/09
Bosch	MRR1Rear (radar sensor)	TRA/TA-R/1849/14
Bosch	MRRe14FCR (radar sensor)	TRA/TA-R/4353/17
Continental Antenna	RKE213E1 (antenna amplifier)	TRA/TA-R/2715/15 D090258
Continental Antenna	RKE223E1GNS (antenna amplifier)	TRA/TA-R/8337/19 D172338
Continental Automotive	CMKG1 (locking system)	TRA/TA-R/8642/19 D172338
Continental Automotive	CMKG2 (locking system)	TRA/TA-R/15164/23 D100428

Manufacturer	Model designation	Radio equipment approval number
Continental Automotive	MARS Keyless (locking system)	TRA/TA-R/4158/17 D080134
HELLA	DM4 (locking system)	TRA/TA-R/4548/17 D080134
Hirschmann	920287A (locking system)	TRA/TA-R/0210/11 D080353
Hirschmann	920287B (locking system)	TRA/TA-R/0655/12 D080353
Hirschmann	920702A (locking system)	TRA/TA-R/13300/22 D172338
Huf Baolong	TSSRE4A (tire pressure sensor)	TRA/TA-R/4516/17 D100428
Huf Baolong	TSSSG4G6b (tire pressure sensor)	TTRA/TA-R/7506/19
HUF	HUF13145 (locking system)	TRA/TA-R/13465/22
HUF	HUF14632 (locking system)	TRA/TA-R/2665/15
HUF	HUF4761 (locking system)	TRA/TA-R/0920/12
LEOPOLD KOSTAL	KK1 (locking system)	TRA/TA-R/3129/16
MARQUARDT	DC12A (locking system)	TRA/TA-RD/4056/17 D100428
MARQUARDT	DC12B (locking system)	TRA/TA-R/0227/11 D080353
MARQUARDT	DC12K (locking system)	TRA/TA-R/0228/11 D080353
MARQUARDT	MS2 (locking system)	TRA/TA-R/4136/17 D080134
MARQUARDT	MS4 (locking system)	TRA/TA-R/7316/19 D172249

Manufacturer	Model designation	Radio equipment approval number
MARQUARDT	MS5 (locking system)	TRA/TA-R/9324/20 D100428
MARQUARDT	MK1 (locking system)	TRA/TA-R/2848/15 D080353
MARQUARDT	MK2 (locking system)	TRA/TA-R/2900/15 D080353
MARQUARDT	3350.38 (locking system)	TRA/TA-R/7051/19 D172249
Schrader	AG5SP4 (tire pressure sensor)	TTRA R/2380/15 D080134
Schrader	AG3PF4 (tire pressure sensor)	TRA R/7287/19 D172338
Schrader	BG3FP4 (tire pressure sensor)	TRA/TA-R/10694/20 D172338
Schrader	MFR (tire pressure monitoring system control unit)	TRA/TA-R/7464/19 D090258
Schrader	MFR3 (tire pressure monitoring system control unit)	TRA/TA-R/7467/19 D090258
Schrader	GG4T (tire pressure sensor)	TRA/TA-R/4686/17 D080134
Schrader	DG6W2D4 (tire pressure sensor)	TRA/TA-R/5511/18 D172249
Sennheiser	M3IETW2R (Earbud)	TRA/TA-R/10988/21
Sennheiser	BTT100 (Bluetooth Audio Transmitter)	TRA/TA-R/10976/21
Veoneer	77GHz MMRV1 (radar sensor)	TRA/TA-R/2706/15
Veoneer	77V12BSM (radar sensor)	TRA/TA-R/7706/19 D172338

Manufacturer	Model designation	Radio equipment approval number
Veoneer	77V12CRN (radar sensor)	TRA/TA-R/7707/19 D172338
Veoneer	77V125CRN (radar sensor)	TRA/TA-R/11335/21 D172338
WITTE-Velbert	SDHTAG3NFC (locking system)	TRA/TA-R/9150/20

Pakistan

Regulatory radio identification

Manufacturer	Model designation	Radio equipment approval number
ADC	ARS4-A (radar sensor)	TAC NO: 9.9014/2019
ADC	ARS4-C (radar sensor)	TAC NO: 9.9389/2019
Bosch	FR5CPCCF (radar sensor)	TAC NO: 9.198/2020
Continental Antenna	RKE213E1 (antenna amplifier)	TAC NO: 9.142/2016

Manufacturer	Model designation	Radio equipment approval number
Continental Antenna	RKE223E1GNS (antenna amplifier)	TAC NO: 9.100169/2019
Continental Automotive	CMKG1 (locking system)	TAC NO:9.100175/2019
Continental Automotive	MARS Keyless (locking system)	TAC NO: 9.213/2017
Continental Automotive	D-WMI2020A (control unit)	TAC NO: 9.9836/2019
HELLA	DM4 (locking system)	TAC NO: 9.409/2017

Manufacturer	Model designation	Radio equipment approval number
Hirschmann	920287A (locking system)	TAC NO: 9.845/2013
Hirschmann	920287B (locking system)	TAC NO: 9.846/2013
Hirschmann	920702A (locking system)	TAC NO. 9.412/2022
HUF Baolong	TSSRE4A (tire pressure sensor)	TAC NO: 9.620/2017

Manufacturer	Model designation	Radio equipment approval number
HUF	HUF14632 (locking system)	TAC NO: 9.598/2015
HUF	HUF4761 (locking system)	TAC NO: 9.790/2013
LEOPOLD KOSTAL	KK1 (locking system)	TAC NO: 9.118/2016
MARQUARDT	DC12A (locking system)	TAC NO: 9.131/2017
MARQUARDT	DC12B (locking system)	TAC NO: 9.829/2013

Manufacturer	Model designation	Radio equipment approval number
MARQUARDT	DC12K (locking system)	TAC NO: 9.830/2013
MARQUARDT	MS2 (locking system)	TAC NO: 9.133/2017
MARQUARDT	MS4 (locking system)	TAC NO: 9.100171/2019
MARQUARDT	MS5 (locking system)	TAC.NO: 9.774/2020
MARQUARDT	MK1 (locking system)	TAC NO: 9.486/2015
MARQUARDT	MK2 (locking system)	TAC NO: 9.497/2015

Manufacturer	Model designation	Radio equipment approval number
Schrader	AG3PF4 (tire pressure sensor)	TAC NO:9.039/2016
Schrader	AG5SP4 (tire pressure sensor)	TAC NO:9.9167/2019
Schrader	BG3FP4 (tire pressure sensor)	TAC NO:9.68/2021
Schrader	GG4T (tire pressure sensor)	TAC NO:9.538/2017

Manufacturer	Model designation	Radio equipment approval number
Schrader	DG6W2D4 (tire pressure sensor)	TAC NO: 9.789/2018
Veoneer	77GHz MMRV1 (radar sensor)	TAC NO: 9.9284/2019
Veoneer	77V12BSM (radar sensor)	TAC NO: 9.9391/2019
Veoneer	77V12CRN (radar sensor)	TAC NO: 9.9391/2019

Manufacturer	Model designation	Radio equipment approval number
Veoneer	77V125CRN (radar sensor)	TAC NO: 9.477/2021
WITTE-Velbert	SDHTAG3NFC (locking system)	TAC NO: 9.527/2020

Paraguay

Regulatory radio identification

Manufacturer	Model designation	Radio equipment approval number
ADC	ARS4-A (radar sensor)	2019-05-I-0271
ADC	ARS4-C (radar sensor)	2019-11-I-0602
Bosch	FR5CPCCF (radar sensor)	2019-09-I-0508
Bosch	MRRe14FCR (radar sensor)	2017-06-I-0000162
Bosch	MRR1Rear (radar sensor)	2019-05-I-000236
Continental Antenna	RKE213E1 (antenna amplifier)	2021-02-I-00101 y 2016-02-I-0000038

Manufacturer	Model designation	Radio equipment approval number
Continental Antenna	RKE223E1GNS (antenna amplifier)	2019-12-I-0656
Continental Automotive	CMKG1 (locking system)	2020-02-I-0110

Manufacturer	Model designation	Radio equipment approval number
Continental Automotive	MARS Keyless (locking system)	2017-05-I-0000136 y
HELLA	DM4 (locking system)	2022-06-I-0388 y 2017-08-I-0000261

Manufacturer	Model designation	Radio equipment approval number
Hirschmann	920287A (locking system)	2016-5-I-000134 y 2011-06-I-0059
Hirschmann	920287B (locking system)	2017-04-I-0000119 y 2012-05-I-0096

Manufacturer	Model designation	Radio equipment approval number
Hirschmann	920702A (locking system)	2022-03-I-0149
Huf Baolong	TSSRE4A (tire pressure sensor)	2017-09-I-0000328

Manufacturer	Model designation	Radio equipment approval number
HUF	HUF13145 (locking system)	2022-04-I-0235
HUF	HUF14632 (locking system)	2020-06-I-0284 y 2015-08-I-0000226

Manufacturer	Model designation	Radio equipment approval number
HUF	HUF4761 (locking system)	2017-12-I-0000409 y 2012-10-I-0178
LEOPOLD KOSTAL	KK1 (locking system)	2015-06-I-0000181

Manufacturer	Model designation	Radio equipment approval number
MARQUARDT	DC12A (locking system)	2020-12-I-0898 y 2015-06-I-0000181

Manufacturer	Model designation	Radio equipment approval number
MARQUARDT	DC12B (locking system)	2021-05-I-0304; 2016-5-I-000144 y 2011-06-I-0067

Manufacturer	Model designation	Radio equipment approval number
MARQUARDT	DC12K (locking system)	2021-05-I-0305; 2016-5-I-000143 y 2011-06-I-0068
MARQUARDT	MS2 (locking system)	2017-04-I-0000101

Manufacturer	Model designation	Radio equipment approval number
MARQUARDT	MS4 (locking system)	2019-10-I-0581
MARQUARDT	MS5 (locking system)	2020-08-I-0604

Manufacturer	Model designation	Radio equipment approval number
MARQUARDT	MK1 (locking system)	2020-07-I-0390 y 2015-07-I-0000200
MARQUARDT	MK2 (locking system)	2020-07-I-0391 y 2015-07-I-0000201

Manufacturer	Model designation	Radio equipment approval number
MARQUARDT	3350.38 (locking system)	2019-04-I-000216
Schrader	AG5SP4 (tire pressure sensor)	2015-04-I-0000150

Manufacturer	Model designation	Radio equipment approval number
Schrader	AG3PF4 (tire pressure sensor)	2019-05-1-000261
Schrader	BG3FP4 (tire pressure sensor)	2021-02-I-0063

Manufacturer	Model designation	Radio equipment approval number
Schrader	GG4T (tire pressure sensor)	2020-02-1-0044
Schrader	DG6W2D4 (tire pressure sensor)	2019-11-1-0632

Manufacturer	Model designation	Radio equipment approval number
Veoneer	77GHz MMRV1 (radar sensor)	2020-07-I-0510
Veoneer	77V12BSM (radar sensor)	2019-07-I-0399

Manufacturer	Model designation	Radio equipment approval number
Veoneer	77V12CRN (radar sensor)	2019-07-I-0398

Manufacturer	Model designation	Radio equipment approval number
Veoneer	77V125CRN (radar sensor)	2021-04-I-0188
WITTE-Velbert	SDHTAG3NFC (locking system)	2020-06-I-0326

Further specific notes

Charging unit for wireless charging of mobile devices (WMI)

D-WMI2020A:

This vehicle has the following radio frequency component approved by CONATEL - Paraguay: Wireless interface for mobile devices, Continental brand, model D-WMI2020A manufactured by Continental Automotive GmbH.

Radio equipment approval number: 2019-11-I-0600

Rear Seat Entertainment System:

DAIRSE:

Importer: Condor S.A.C.I Casa Central, J.B. Gorostiaga 315 y Guaraníes, Asunción, Paraguay, (595 21) 569 7000, sac@condor.com.py

Philippines

Regulatory radio identification

Manufacturer	Model designation	Radio equipment approval number
ADC	ARS4-A (radar sensor)	ESD-1409466 C
ADC	ARS4-C (radar sensor)	ESD-1920226 C
Bosch	FR5CPCCF (radar sensor)	ESD-1920531 C
Bosch	MRR1Rear (radar sensor)	ESD-1408917 C
Bosch	MRRe14FCR (radar sensor)	ESD-1716172 C
Continental Antenna	RKE213E1 (antenna amplifier)	ESD-1511856 C
Continental Antenna	RKE223E1GN S (antenna amplifier)	ESD-1921015 C
Continental Automotive	CMKG1 (locking system)	ESD-2021556 C
Continental Automotive	CMKG2 (locking system)	ESD-RCE-2332806
Continental Automotive	MARS Keyless (locking system)	ESD-1714865 C
HELLA	DM4 (locking system)	ESD-1715539 C
Hirschmann	920287A (locking system)	ESD-1105246 C
Hirschmann	920287B (locking system)	ESD-1206044 C
Hirschmann	920702A (locking system)	ESD-RCE-2229632
Huf Baolong	TSSRE4A (tire pressure sensor)	ESD-1715393 C

Manufacturer	Model designation	Radio equipment approval number
HUF	HUF13145 (locking system)	ESD-RCE-2229722
HUF	HUF14632 (locking system)	ESD-1511236 C
HUF	HUF4761 (locking system)	ESD-1206521 C
LEOPOLD KOSTAL	KK1 (locking system)	ESD-1510698 C
MARQUARDT	DC12A (locking system)	ESD-1714489 C

Manufacturer	Model designation	Radio equipment approval number
MARQUARDT	DC12B (locking system)	ESD-1105216 C
MARQUARDT	DC12K (locking system)	ESD-1105215 C
MARQUARDT	MS2 (locking system)	ESD-1715652 C
MARQUARDT	MS4 (locking system)	ESD-1919133 C
MARQUARDT	MS5 (locking system)	ESD-2022426 C
MARQUARDT	MK1 (locking system)	ESD-1510644 C

Manufacturer	Model designation	Radio equipment approval number
MARQUARDT	MK2 (locking system)	ESD-1510645 C
MARQUARDT	3350.38 (locking system)	ESD-1919198 C
Schrader	AG5SP4 (tire pressure sensor)	ESD-1715393 C
Schrader	AG3PF4 (tire pressure sensor)	ESD-1919585 C
Schrader	BG3FP4 (tire pressure sensor)	ESD-RCE-2124846

Manufacturer	Model designation	Radio equipment approval number
Schrader	GG4T (tire pressure sensor)	ESD-1715977 C
Schrader	DG6W2D4 (tire pressure sensor)	ESD-1817081 C
Veoneer	77GHz MMRV1 (radar sensor)	ESD-1510921 C
WITTE-Velbert	SDHTAG3NFC (locking system)	ESD-2022599 C

Zambia

Regulatory radio identification

Manufacturer	Model designation	Radio equipment approval number
Continental Antenna	RKE223E1 (antenna amplifier)	ZMB/ ZICTA/TA/ 2019/3/11
Continental Automotive	MARS Keyless (locking system)	ZMB/ ZICTA/TA/ 2019/3/3
HELLA	DM4 (locking system)	ZMB/ ZICTA/TA/ 2019/3/4
Hirschmann	920287A (locking system)	ZMB/ ZICTA/TA/ 2019/7/12
Hirschmann	920287B (locking system)	ZMB/ ZICTA/TA/ 2019/7/11
HUF	HUF4761 (locking system)	ZMB/ ZICTA/TA/ 2018/12/18
LEOPOLD KOSTAL	KK1 (locking system)	ZMB/ ZICTA/TA/ 2019/3/48
MARQUARDT	DC12A (locking system)	ZMB/ ZICTA/TA/ 2019/5/16

Manufacturer	Model designation	Radio equipment approval number
MARQUARDT	DC12B (locking system)	ZMB/ZICTA/TA/2019/5/17
MARQUARDT	DC12K (locking system)	ZMB/ZICTA/TA/2019/5/18
MARQUARDT	MS2 (locking system)	ZMB/ZICTA/TA/2018/9/30
MARQUARDT	MS4 (locking system)	ZMB/ZICTA/TA/2019/7/123

Manufacturer	Model designation	Radio equipment approval number
MARQUARDT	MK1 (locking system)	ZMB/ZICTA/TA/2019/3/20
MARQUARDT	MK2 (locking system)	ZMB/ZICTA/TA/2019/3/21
MARQUARDT	3350.38 (locking system)	ZMB/ZICTA/TA/2019/3/6
MARQUARDT	MU1 (locking system)	ZMB/ZICTA/TA/2019/7/124

Serbia

Regulatory radio identification

Manufacturer	Model designation	Radio equipment approval number
ADC	ARS4-A (radar sensor)	И011 20
ADC	ARS4-C (radar sensor)	И011 19
Bosch	FR5CPCCF (radar sensor)	И011 19
Bosch	LRR3 (radar sensor)	И011 19
Bosch	MRR1Rear (radar sensor)	И011 17



Manufacturer	Model designation	Radio equipment approval number
Bosch	MRRe14FCR (radar sensor)	И005 17
Continental Antenna	RKE213E1 (antenna amplifier)	И005 21
Continental Antenna	RKE223E1GNS (antenna amplifier)	И005 22
Continental Automotive	CMKG1 (locking system)	И005 20
Continental Automotive	CMKG2 (locking system)	И005 23



Manufacturer	Model designation	Radio equipment approval number
Continental Automotive	MARS Keyless (locking system)	И005 20
HELLA	DM4 (locking system)	И005 20
Hirschmann	920287A (locking system)	И005 18
Hirschmann	920287B (locking system)	И005 18
Hirschmann	920702A (locking system)	И005 22



Manufacturer	Model designation	Radio equipment approval number
Huf Baolong	TSSRE4A (tire pressure sensor)	И005 20
HUF	HUF13145 (locking system)	И005 22
HUF	HUF14632 (locking system)	И005 21
HUF	HUF4761 (locking system)	И005 21
LEOPOLD KOSTAL	KK1 (locking system)	И005 18

Manufacturer	Model designation	Radio equipment approval number
MARQUARDT	DC12A (locking system)	И005 20
MARQUARDT	DC12B (locking system)	И005 20
MARQUARDT	DC12K (locking system)	И005 20
MARQUARDT	MS2 (locking system)	И011 17
MARQUARDT	MS4 (locking system)	И005 19
MARQUARDT	MS5 (locking system)	И005 20

Manufacturer	Model designation	Radio equipment approval number
MARQUARDT	MK1 (locking system)	И005 21
MARQUARDT	MK2 (locking system)	И005 21
MARQUARDT	3350.38 (locking system)	И005 22
Meta System	MUW II (interior protection)	И011 19
Schrader	AG5SP4 (tire pressure sensor)	И005 15

Manufacturer	Model designation	Radio equipment approval number
Schrader	AG3PF4 (tire pressure sensor)	И005 15
Schrader	BG3FP4 (tire pressure sensor)	И005 20
Schrader	GG4T (tire pressure sensor)	И005 17
Schrader	DG6W2D4 (tire pressure sensor)	И005 18



Manufacturer	Model designation	Radio equipment approval number
Schrader	MC34MA4 (tire pressure monitoring system control unit)	И011 11
Veoneer	77GHz MMRV1 (radar sensor)	И011 18
Veoneer	77V12BSM (radar sensor)	И011 19
Veoneer	77V12CRN (radar sensor)	И011 19



Manufacturer	Model designation	Radio equipment approval number
Veoneer	77V125CRN (radar sensor)	И038 21
WITTE-Velbert	SDHTAG3NFC (locking system)	И005 20

Singapore

Regulatory radio identification

Manufacturer	Model designation	Radio equipment approval number
		Complies with IMDA Standards
ADC	ARS4-A (radar sensor)	DA103365
ADC	ARS4-C (radar sensor)	DA103365
Bosch	FR5CPCCF (radar sensor)	DA103365
Bosch	LRR3 (radar sensor)	DA103365
Bosch	MRR1Rear (radar sensor)	DA103365

Manufacturer	Model designation	Radio equipment approval number
Bosch	MRRe14FCR (radar sensor)	DA103365
Continental Antenna	RKE213E1 (antenna amplifier)	DA105282
Continental Antenna	RKE223E1GNS (antenna amplifier)	DA107248
Continental Automotive	CMKG1 (locking system)	DA103365
Continental Automotive	CMKG2 (locking system)	DB106440
Continental Automotive	MARS Keyless (locking system)	DA105282
Continental Automotive	UWBTRX1 (locking system)	DB107091
Continental Automotive	D-WMI2020A (control unit)	DA103365
Harman Becker	HERMES 3.0 (communication module)	DB107091
HELLA	DM4 (locking system)	DA103365 N3308-22
Hirschmann	920287A (locking system)	DA103365
Hirschmann	920287B (locking system)	DA103365
Hirschmann	920702A (locking system)	DA105282
HUF Baolong	TSSRE4A (tire pressure sensor)	DA30668
HUF Baolong	TSSSG4G6b (tire pressure sensor)	DA28467
HUF	HUF14632 (locking system)	DA105282
HUF	HUF4761 (locking system)	DA103365
LEOPOLD KOSTAL	KK1 (locking system)	DA103365

Manufacturer	Model designation	Radio equipment approval number
MARQUARDT	DC12A (locking system)	DA103787
MARQUARDT	DC12B (locking system)	DA103365
MARQUARDT	DC12K (locking system)	DA103365
MARQUARDT	MS2 (locking system)	DA103787
MARQUARDT	MS4 (locking system)	DA103787
MARQUARDT	MS5 (locking system)	DB107091
MARQUARDT	MK1 (locking system)	DA103365
MARQUARDT	MK2 (locking system)	DA103365

Manufacturer	Model designation	Radio equipment approval number
MARQUARDT	3350.38 (locking system)	DA103787
Meta System	ITS/TPS (interior protection)	DA103365
Meta System	MUW II (interior protection)	DA103365
Schrader	AG5SP4 (tire pressure sensor)	DA103787
Schrader	AG3PF4 (tire pressure sensor)	DA107968
Schrader	BG3FP4 (tire pressure sensor)	DA103365

Manufacturer	Model designation	Radio equipment approval number
Schrader	GG4T (tire pressure sensor)	DA105282
Schrader	DG6W2D4 (tire pressure sensor)	DA105282
Veoneer	77GHz MMRV1 (radar sensor)	DA103365
Veoneer	77V12BSM (radar sensor)	DA103365
Veoneer	77V12CRN (radar sensor)	DA103365

Manufacturer	Model designation	Radio equipment approval number
Veoneer	77V125CRN (radar sensor)	DA103365
WITTE-Velbert	SDHTAG3NFC (locking system)	DA107248

South Africa

Regulatory radio identification

Manufacturer	Model designation	Radio equipment approval number
ADC	ARS4-A (radar sensor)	TA-2014/1637
ADC	ARS4-C (radar sensor)	TA-2019/1595
Bosch	FR5CPCCF (radar sensor)	TA-2019/1200
Bosch	MRR1Rear (radar sensor)	TA-2014/212
Bosch	MRRe14FCR (radar sensor)	TA-2017/2013

Manufacturer	Model designation	Radio equipment approval number
Bosch	LRR3 (radar sensor)	TA-2009/464
Continental Antenna	RKE213E1 (antenna amplifier)	TA-2015/1438
Continental Antenna	RKE223E1 (antenna amplifier)	TA-2020/043
Continental Automotive	CMKG1 (locking system)	TA-2019/5405
Continental Automotive	MARS Keyless (locking system)	TA-2016/3500

Manufacturer	Model designation	Radio equipment approval number
Continental Automotive	UWBTRX1 (locking system)	TA-2021/3460
Gentex	MUAHL 5 (convenience system)	TA-2015/1386
HELLA	DM4 (locking system)	TA-2017/2518
Hirschmann	920287A (locking system)	TA-2011/374
Hirschmann	920287B (locking system)	TA-2013/1262

Manufacturer	Model designation	Radio equipment approval number
Hirschmann	920702A (locking system)	TA-2022/0162
Huf Baolong	TSSRE4A (tire pressure sensor)	TA-2017/1393
Huf Baolong	TSSSG4G6b (tire pressure sensor)	TA-2019/1440
HUF	HUF13145 (locking system)	TA-2022/0375

Manufacturer	Model designation	Radio equipment approval number
HUF	HUF14632 (locking system)	TA-2015/1077
HUF	HUF4761 (locking system)	TA-2012/1543
LEOPOLD KOSTAL	KK1 (locking system)	TA-2015/595
Meta System	ITS Master (interior protection)	TA-2011/1636
Meta System	ITS Sensor (interior protection)	TA-2011/1227

Manufacturer	Model designation	Radio equipment approval number
Meta System	MUW II (interior protection)	TA-2019/261
MARQUARDT	DC12A (locking system)	TA-2017/312
MARQUARDT	DC12B (locking system)	TA-2011/370
MARQUARDT	DC12K (locking system)	TA-2012/1542
MARQUARDT	MS2 (locking system)	TA-2016/3314
MARQUARDT	MS4 (locking system)	TA-2019/843

Manufacturer	Model designation	Radio equipment approval number
MARQUARDT	MS5 (locking system)	TA-2020/5765
MARQUARDT	MK1 (locking system)	TA-2015/179
MARQUARDT	MK2 (locking system)	TA-2015/180
MARQUARDT	3350.38 (locking system)	TA-2018/3985
Schrader	AG5SP4 (tire pressure sensor)	TA-2015/072

Manufacturer	Model designation	Radio equipment approval number
Schrader	AG3PF4 (tire pressure sensor)	TA-2019-133
Schrader	BG3FP4 (tire pressure sensor)	TA-2020/773
Schrader	MFR (control unit)	TA-2019/273
Schrader	MFR3 (control unit)	TA-2019-273
Schrader	GG4T (tire pressure sensor)	TA-2017/3884

Manufacturer	Model designation	Radio equipment approval number
Schrader	DG6W2D4 (tire pressure sensor)	TA-2017/2933
Schrader	MC34MA4 (tire pressure monitoring system control unit)	TA-2011/1370
Veoneer	77GHz MMRV1 (radar sensor)	TA-2015/2087
Veoneer	77V12BSM (radar sensor)	TA-2019/1380

Manufacturer	Model designation	Radio equipment approval number
Veoneer	77V12CRN (radar sensor)	TA-2019/1382
Veoneer	77V125CRN (radar sensor)	TA-2021/0150
WITTE-Velbert	SDHTAG3NFC (locking system)	TA-2020/055

South Korea

Regulatory radio identification

Manufacturer	Model designation	Radio equipment approval number
Continental Antenna	RKE223E1 (antenna amplifier)	R-C-Ca3-RKE223E1
Huf Baolong	TSSRE4A (tire pressure sensor)	
HUF	HUF14632 (locking system)	MSIP-CRM-HHF-HUF-14632
Schrader	MFR (control unit)	MSIP-REM-SRD-MFR



Manufacturer	Model designation	Radio equipment approval number
Schrader	MFR3 (control unit)	KCC R-R-SRD-MFR3A
Schrader	MC34MA4 (tire pressure monitoring system control unit)	KCC-REM-SRD-MRXMC34MA4
Schrader	AG5SP4 (tire pressure sensor)	MSIP-CRM-SRD-AG5SP4
Schrader	AG3PF4 (tire pressure sensor)	R-C-SRD-AG3PF4



Manufacturer	Model designation	Radio equipment approval number
Schrader	BG3FP4 (tire pressure sensor)	R-C-SRD-BG3FP4
Schrader	GG4T (tire pressure sensor)	MSIP-CRM-SRD-GG4T
Schrader	DG6W2D4 (tire pressure sensor)	R-CRM-SRD-DG6W2D4

Togo

Regulatory radio identification

Manufacturer	Model designation	Radio equipment approval number
Continental Antenna	RKE223E1 (antenna amplifier)	No. 024/19
Continental Automotive	MARS Keyless (locking system)	No. 040/19
HELLA	DM4 (locking system)	No. 039/19
Hirschmann	920287A (locking system)	No. 089/19
Hirschmann	920287B (locking system)	No. 088/19

Manufacturer	Model designation	Radio equipment approval number
HUF	HUF4761 (locking system)	No. 041/19
LEOPOLD KOSTAL	KK1 (locking system)	No. 060/19
MARQUARDT	DC12A (locking system)	No. 055/19
MARQUARDT	DC12B (locking system)	No. 057/19
MARQUARDT	DC12K (locking system)	No. 056/19
MARQUARDT	MS2 (locking system)	No. 008/19
MARQUARDT	MS4 (locking system)	No. 101/19

Manufacturer	Model designation	Radio equipment approval number
MARQUARDT	MK1 (locking system)	No. 021/19
MARQUARDT	MK2 (locking system)	No. 022/19
MARQUARDT	3350.38 (locking system)	No. 016/20

Ukraine

Regulatory radio identification

Manufacturer	Model designation	Radio equipment approval number
Continental Antenna	RKE213E1 (antenna amplifier)	UKR.355-123/19
Continental Antenna	RKE223E1GNS (antenna amplifier)	UA.R.TR.052.682-19
Continental Automotive	CMKG1 (locking system)	UA1.001.021175-20-TE
Continental Automotive	MARS Keyless (locking system)	RTS.UKR.355-34/18



Manufacturer	Model designation	Radio equipment approval number
HELLA	DM4 (locking system)	UA.TR.109
Hirschmann	920287A (locking system)	UKR.355-7/20
Hirschmann	920287B (locking system)	UKR.355-8/20
Huf Baolong	TSSRE4A (tire pressure sensor)	UA 1.001.018568-19-TE



Manufacturer	Model designation	Radio equipment approval number
Huf Baolong	TSSSG4G6b (tire pressure monitoring system control unit)	UA 1.001.019289-19-TE
HUF	HUF13145 (locking system)	UKR.355-113/19
HUF	HUF14632 (locking system)	UKR.355-113/19
HUF	HUF4761 (locking system)	UA1.001.018653-19-TE



Manufacturer	Model designation	Radio equipment approval number
LEOPOLD KOSTAL	KK1 (locking system)	1O094.006682-19
MARQUARDT	DC12A (locking system)	UA.R.TR.052.307-19
MARQUARDT	DC12B (locking system)	UA.R.TR.052.308-19
MARQUARDT	DC12K (locking system)	UA.R.TR.052.309-19
MARQUARDT	MS2 (locking system)	UA1.001.019129-19-TE
MARQUARDT	MS4 (locking system)	UA.R.TR.052.528-19

Manufacturer	Model designation	Radio equipment approval number
MARQUARDT	MS5 (locking system)	632.16-CET
MARQUARDT	MK1 (locking system)	UA1.001.019 233-19-TE
MARQUARDT	MK2 (locking system)	UA1.001.019 234-19-TE
MARQUARDT	3350.38 (locking system)	UA1.001.018 888-19-TE
Schrader	AG5SP4 (tire pressure sensor)	UA.TR. 032

Manufacturer	Model designation	Radio equipment approval number
Schrader	AG3PF4 (tire pressure sensor)	UA-TR-001
Schrader	BG3FP4 (tire pressure sensor)	UA-TR-109
Schrader	GG4T (tire pressure sensor)	UA.TR. 028

Manufacturer	Model designation	Radio equipment approval number
Schrader	DG6W2D4 (tire pressure sensor)	UA.TR. 028
WITTE-Velbert	SDHTAG3NFC (locking system)	UA.R.TR.052. 120-20

Uzbekistan

Regulatory radio identification

Manufacturer	Model designation
Continental Automotive	RKE213E1 (antenna amplifier)
Continental Automotive	RKE223E1GNS (antenna amplifier)
Continental Automotive	CMKG1 (locking system)
Continental Automotive	CMKG2 (locking system)
Continental Automotive	MARS Keyless (locking system)
HELLA	DM4 (locking system)
Hirschmann	920287A (locking system)
Hirschmann	920287B (locking system)
Hirschmann	920702A (locking system)
HUF	HUF13145 (locking system)
LEOPOLD KOSTAL	KK1 (locking system)
MARQUARDT	DC12A (locking system)
MARQUARDT	DC12B (locking system)
MARQUARDT	DC12K (locking system)
MARQUARDT	MS2 (locking system)
MARQUARDT	MS4 (locking system)
MARQUARDT	MS5 (locking system)
MARQUARDT	MK1 (locking system)
MARQUARDT	MK2 (locking system)
MARQUARDT	3350.38 (locking system)
WITTE-Velbert	SDHTAG3NFC (locking system)

United Arab Emirates

TDRA هيئة تنظيم الاتصالات والحكومة الرقمية TELECOMMUNICATIONS AND DIGITAL GOVERNMENT REGULATORY AUTHORITY

Regulatory radio identification

Manufacturer	Model designation	Radio equipment approval number
ADC	ARS4-A (radar sensor)	TA RTTE: Er558296/17, DA40068/15
ADC	ARS4-C (radar sensor)	TA RTTE: ER77062/19, DA40068/15
Bosch	FR5CPCCF (radar sensor)	TA RTTE: ER74533/19, DA36758/14
Continental Antenna	RKE213E1 (antenna amplifier)	TRA ER64693/18, DA65993/17
Continental Antenna	RKE223E1GNS (antenna amplifier)	TRA ER76442/19, DA65993/17
Continental Automotive	CMKG1 (locking system)	TRA ER77964/20, DA0018994/09

Manufacturer	Model designation	Radio equipment approval number
Continental Automotive	CMKG2 (locking system)	TRA ER17713/23, DA36975/14
Continental Automotive	MARS Keyless (locking system)	TRA ER56005/17, DA44932/15
Continental Automotive	UWBTRX1 (locking system)	TRA ER11321/22, DA36975/14
Gentex	MUAHL 5 (convenience system)	TRA ER41849/15, DA35176/14
Harman Becker	HERMES 3.0 (communication module)	TRA ER03601/21, DA0028019/10
HELLA	DM4 (locking system)	TRA ER56616/17, DA44932/15
Hirschmann	920287A (locking system)	TRA ER52213/17, DA35219/14
Hirschmann	920287B (locking system)	TRA ER42011/15, DA35219/14
Hirschmann	920702A (locking system)	TRA ER10723/22, DA35219/14
Huf Baolong	TSSRE4A (tire pressure sensor)	TRA ER57806/17, DA36976/14
Huf Baolong	TSSSG4G6b (tire pressure monitoring system control unit)	TRA ER7307/19, DA0086237/12
HUF	HUF13145 (locking system)	TRA ER08607/22, DA36976/14

Manufacturer	Model designation	Radio equipment approval number
HUF	HUF14632 (locking system)	TRA ER63716/18, DA36976/14
HUF	HUF4761 (locking system)	TRA ER55496/17, DA36976/14
HUF	HUF13145 (locking system)	TRA ER08607/22 DA36976/14
LEOPOLD KOSTAL	KK1 (locking system)	TRA ER62622/18, DA0105247/13

Manufacturer	Model designation	Radio equipment approval number
MARQUARDT	DC12A (locking system)	TRA ER53465/17, DA0018994/09
MARQUARDT	DC12B (locking system)	TRA ER0067828/11, DA0018994/09
MARQUARDT	DC12K (locking system)	TRA ER0067829/11, DA0018994/09
MARQUARDT	MS2 (locking system)	TRA ER52668/17, DA0018994/09

Manufacturer	Model designation	Radio equipment approval number
MARQUARDT	MS4 (locking system)	TRA ER71616/19, DA0018994/09
MARQUARDT	MS5 (locking system)	TRA ER80720/20, DA0018994/09
MARQUARDT	MK1 (locking system)	TRA ER64145/18, DA0018994/09
MARQUARDT	MK2 (locking system)	TRA ER64146/18, DA0018994/09
MARQUARDT	3350.38 (locking system)	TRA ER69280/19, 0018994/09

Manufacturer	Model designation	Radio equipment approval number
Schrader	AG5SP4 (tire pressure sensor)	TRA ER37156/15, DA0047074/10
Schrader	AG3PF4 (tire pressure sensor)	TRA ER70533/19, DA0047074/10
Schrader	BG3FP4 (tire pressure sensor)	TRA ER96175/21, DA0047074/10
Schrader	GG4T (tire pressure sensor)	TRA ER57985/17, DA0047074/10

Manufacturer	Model designation	Radio equipment approval number
Schrader	DG6W2D4 (tire pressure sensor)	TRA ER960528/18, DA0047074/10
Schrader	MC34MA4 (tire pressure monitoring system control unit)	TRA ER37066/15, DA0047074/10
Sennheiser	M3IETW2L (Earbud)	ER78231/20
Sennheiser	BTT100 (Bluetooth Audio Transmitter)	ER64728/18

Manufacturer	Model designation	Radio equipment approval number
Veoneer	77GHz MMRV1 (radar sensor)	TA RTTE: ER96352/21; 0020858/10
Veoneer	77V12BSM (radar sensor)	TA RTTE: ER72324/19; 0020858/10

Manufacturer	Model designation	Radio equipment approval number
Veoneer	77V12CRN (radar sensor)	TA RTTE: ER72323/19; 0020858/10

Manufacturer	Model designation	Radio equipment approval number
Veoneer	77V125CRN (radar sensor)	TA RTTE: ER95775/21; 0020858/10
WITTE-Velbert	SDHTAG3NFC (locking system)	TRA ER79695/20, DA0018994/09

United Kingdom

Regulatory radio identification

Manufacturer	Model designation
Continental Antenna	RKE213E1 (antenna amplifier)
Continental Antenna	RKE223E1GNS (antenna amplifier)
Continental Automotive	CMKG1 (locking system)
Continental Automotive	CMKG2 (locking system)
Continental Automotive	MARS Keyless (locking system)

UKCA

Manufacturer	Model designation
Continental Automotive	UWBTRX1 (locking system)
HUF	HUF13145 (locking system)
Huf Baolong	TSSRE4A (tire pressure sensor)
HELLA	DM4 (locking system)
Hirschmann	920287A (locking system)
Hirschmann	920287B (locking system)
Hirschmann	920702A (locking system)

UKCA

Manufacturer	Model designation
LEOPOLD KOSTAL	KK1 (locking system)
MARQUARDT	DC12B (locking system)
MARQUARDT	DC12K (locking system)
MARQUARDT	MK1 (locking system)
MARQUARDT	MK2 (locking system)
MARQUARDT	MS2 (locking system)
MARQUARDT	MS2 (locking system)
MARQUARDT	MS4 (locking system)
MARQUARDT	3350.38 (locking system)

UKCA

Manufacturer	Model designation
Schrader	AG5SP4 (tire pressure sensor)
Schrader	AG3PF4 (tire pressure sensor)
Schrader	BG3FP4 (tire pressure sensor)
Schrader	GG4T (tire pressure sensor)
Schrader	DG6W2D4 (tire pressure sensor)
WITTE-Velbert	SDHTAG3NFC (locking system)

Further specific notes

Charging unit for wireless charging of mobile devices (WMI)

D-WMI2016A, D-WMI2017A, D-WMI2017B:

Restrictions or Requirements in the UK: A separation distance of at least 3.9 in (10 cm) between all persons and the device must be provided at all times. The Device must not be co-located or operating in conjunction with any other antenna or transmitter.

D-WMI2020A:

Restrictions or Requirements in the UK: A separation distance of at least 0 in (0 cm) between all persons and the device must be provided at all times. The Device must not be co-located or operating in conjunction with any other antenna or transmitter.

United States

Regulatory radio identification

Manufacturer	Model designation	Radio equipment approval number
Sennheiser	M3IETW2R (Earbud)	FCC ID: DMOM3IETW2R
Sennheiser	M3IETW2L (Earbud)	FCC ID: DMOM3IETW2L
Sennheiser	BTT100 (Bluetooth Audio Transmitter)	FCC ID: DMOBTT100

Information on installation clearances

Charging unit for wireless charging of mobile devices (WMI)

This equipment complies with FCC and IC radiation exposure limits set forth for an uncontrolled environment. This equipment should be installed and operated with minimum distance of 0 cm (in contact) between the radiator and your body.This transmitter must not be co-located or operating in conjunction with any other antenna or transmitter. Cet équipement est conforme aux limites d'exposition aux rayonnements IC établies pour un Environnement non contrôlé. Cet équipement doit être installé et utilisé avec un minimum de 0 cm (in contact) de distance entre la source de rayonnement et votre corps. Ce transmetteur ne doit pas être place au même endroit ou utilise simultanément avec un autre transmetteur ou antenne.

Rear Seat Entertainment System:

This device complies with part 15 of the FCC Rules and Industry Canada license-exempt RSS standard(s). Operation is subject to the following two conditions: (1)This device may not cause harmful interference, and (2) this device must accept any interference received, including interference that may cause undesired operation.

Changes or modifications not expressly approved by the party responsible for compliance could void the user’s authority to operate the equipment.

This device must be installed and used at a distance of at least 6 cm from the body.

This device complies with ISED Canada licence-exempt RSS standard(s). Operation is subject to the following two conditions: (1) this device may not cause interference, and (2) this device must accept any interference, including interference that may cause undesired operation of the device. Le présent appareil est conforme aux CNR d'Industrie Canada applicables aux appareils radio exempts de licence. L'exploitation est autorisée aux deux conditions suivantes : (1) l'appareil ne doit pas produire de brouillage, et (2) l'utilisateur de l'appareil doit accepter tout brouillage radioélectrique subi, même si le brouillage est susceptible d'en compromettre le fonctionnement.

This equipment complies with ISED radiation exposure limits established for an uncontrolled environment. This equipment must be installed and operated with a minimum distance of 5 cm between the radiation source and your body. Cet équipement est conforme aux limites d'exposition aux rayonnements ISED établies pour un environnement non contrôlé. Cet équipement doit être installé et utilisé avec un minimum de 5 cm de distance entre la source de rayonnement et votre corps.

Radar sensors:

ARS4-C (ADC), ARS4-B (ADC), ARS4-A (ADC), FR5CPCCF (Bosch), MRR1REAR (Bosch), MRREVO14F (Bosch), LRR3 (Bosch), 77V12BSM (Veoneer), 77V12CRN (Veoneer), MMRV1 (Veoneer)

Radiofrequency radiation exposure Information:

This equipment complies with FCC radiation exposure limits set forth for an uncontrolled environment. This equipment should be installed and operated with minimum distance of 20 cm between the radiator and your body.

This transmitter must not be co-located or operating in conjunction with any other antenna or transmitter.

This equipment should be installed and operated with minimum distance of 20 cm between the radiator and your body. Cet équipement doit être installé et utilisé avec un minimum de 20 cm de distance entre la source de rayonnement et votre corps.

BT Audio Transmitter (BTT100):

F214 0032 13

This equipment complies with FCC and IC radiation exposure limits set forth for an uncontrolled environment. This equipment should be installed and operated with minimum distance of 9 cm between the radiator and your body.

This transmitter must not be co-located or operating in conjunction with any other antenna or transmitter.

Vietnam

Regulatory radio identification

Manufacturer	Model designation	Radio equipment approval number
ADC	ARS4-A (radar sensor)	Mercedes-Benz Vietnam Company Limited
ADC	ARS4-C (radar sensor)	Mercedes-Benz Vietnam Company Limited
Bosch	FR5CPCCF (radar sensor)	Mercedes-Benz Vietnam Company Limited
Bosch	MRR1Rear (radar sensor)	Mercedes-Benz Vietnam Company Limited
Bosch	MRRe14FCR (radar sensor)	Mercedes-Benz Vietnam Company Limited
Continental Antenna	RKE213E1 (antenna amplifier)	Suntech Vietnam Technology Company Limited C0274151118AF04A2
Continental Antenna	RKE223E1GNS (antenna amplifier)	Suntech Vietnam Technology Company Limited B1522011121AF04A3
Continental Automotive	CMKG1 (locking system)	Suntech Vietnam Technology Company Limited C0001070120AF04A2



Manufacturer	Model designation	Radio equipment approval number
Continental Automotive	MARS Keyless (locking system)	Mercedes-Benz Vietnam Company Limited B0748240419AF04A2
HELLA	DM4 (locking system)	Mercedes-Benz Vietnam Company Limited C0204030321AF04A3



Manufacturer	Model designation	Radio equipment approval number
Hirschmann	920702A (locking system)	Mercedes-Benz Vietnam Company Limited B0424070422AF04A3
Huf Baolong	TSSRE4A (tire pressure sensor)	C0112200717AF04A2
HUF	HUF13145 (tire pressure sensor)	C1071050922AF04A3



Manufacturer	Model designation	Radio equipment approval number
LEOPOLD KOSTAL	KK1 (locking system)	Mercedes-Benz Vietnam Company Limited C0313140421AF0403
MARQUARDT	DC12A (locking system)	Suntech Vietnam Technology Company Limited C0208030321AF04A3

Manufacturer	Model designation	Radio equipment approval number
MARQUARDT	DC12B (locking system)	Suntech Vietnam Technology Company Limited C007621012 1AF04A3
MARQUARDT	DC12K (locking system)	Suntech Vietnam Technology Company Limited C007721012 1AF04A3

Manufacturer	Model designation	Radio equipment approval number
MARQUARDT	MS2 (locking system)	Suntech Vietnam Technology Company Limited C007521012 1AF04A3
MARQUARDT	MS4 (locking system)	Suntech Vietnam Technology Company Limited C091311082 1AF04A3

Manufacturer	Model designation	Radio equipment approval number
MARQUARDT	MS5 (locking system)	Suntech Vietnam Technology Company Limited C014114052 0AF04A2
MARQUARDT	MK1 (locking system)	Suntech Vietnam Technology Company Limited C004915012 1AF04A3

Manufacturer	Model designation	Radio equipment approval number
MARQUARDT	MK2 (locking system)	Suntech Vietnam Technology Company Limited C005015012 1AF04A3
MARQUARDT	3350.38 (locking system)	Suntech Vietnam Technology Company Limited C013103022 1AF04A3

Manufacturer	Model designation	Radio equipment approval number
Schrader	AG5SP4 (tire pressure sensor)	Suntech Vietnam Technology Company Limited C000205011 9AF042A
Schrader	AG3PF4 (tire pressure sensor)	Suntech Vietnam Technology Company Limited C012022051 9AF04A2

Manufacturer	Model designation	Radio equipment approval number
Schrader	GG4T (tire pressure sensor)	Suntech Vietnam Technology Company Limited C017019101 7AF04A2
Schrader	DG6W2D4 (tire pressure sensor)	Suntech Vietnam Technology Company Limited C007807051 8AF04A2

Manufacturer	Model designation	Radio equipment approval number
Veoneer	77GHz MMRV1 (radar sensor)	Mercedes-Benz Vietnam Company Limited
Veoneer	77V12BSM (radar sensor)	Mercedes-Benz Vietnam Company Limited
Veoneer	77V12CRN (radar sensor)	Mercedes-Benz Vietnam Company Limited

Manufacturer	Model designation	Radio equipment approval number
Veoneer	77V125CRN (radar sensor)	Mercedes-Benz Vietnam Company Limited
WITTE-Velbert	SDHTAG3NFC (locking system)	Mercedes-Benz Vietnam Company Limited A0847130820AF04A3

Information about the specific absorption rate (SAR)

Information about the specific absorption rate

The values have been determined and tested in accordance with the Décret n° 2019-1186 guideline regarding the indication of the specific absorption rate (SAR) of wireless vehicle components.

Further information and updates are available at the following web address:

https://regulatoryradioinformation.corpinter.net/us

Information about the specific absorption rate

Vehicle components	SAR value in W/kg	Applicable limit value
Compensator ECE DE003 & ECE DE004	< 0.2 W/kg	2 W/kg
DAI RSE	1.8 W/kg	2 W/kg
D-WMI2020A	0.018 W/kg	4 W/kg
HERMES communication module	< 0.4 W/kg	2 W/kg
RAMSES communication module	0.036 W/kg	2 W/kg
NRCS2P	0.003 W/kg	2 W/kg
NTG6	0.199 W/kg	4 W/kg
NTG7	0.08 W/kg	2 W/kg
NTG7RSU	0.07 W/kg	2 W/kg
Gen20x.i2 LS3+	2,2 W/kg	4 W/kg
Gen20x.i2 LS4+	2,5 W/kg	4 W/kg
Tablet PC SM-T230NZ	0.7 W/kg	4 W/kg
Radio data transmission telephone system	0.24 W/kg	2 W/kg

Vehicle identification plate, VIN and engine number overview

Vehicle identification plate

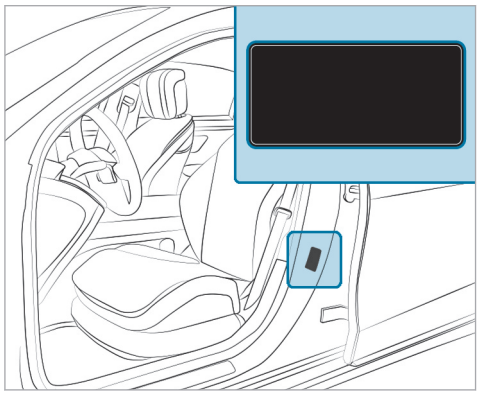

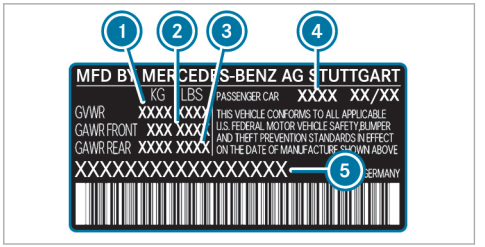

Vehicle identification plate (USA only)

1. Maximum permissible gross vehicle mass
2. Maximum permissible front axle load
3. Maximum permissible rear axle load
4. Paint code
5. VIN (vehicle identification number)

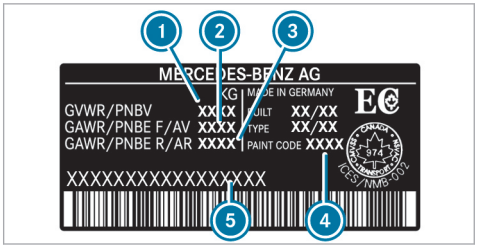

Vehicle identification plate (Canada only)

1. Maximum permissible gross vehicle mass
2. Maximum permissible front axle load
3. Maximum permissible rear axle load
4. Paint code
5. VIN (vehicle identification number)

The maximum permissible gross vehicle weight is made up of the vehicle weight, all vehicle occupants, the fuel and the load. The maximum gross axle weight rating is the maximum weight that can be carried on one axle (front- or rear axle).

Do not exceed the maximum permissible gross vehicle weight or the maximum gross axle weight rating for the front- or rear axle.

VIN below the front right-hand seat

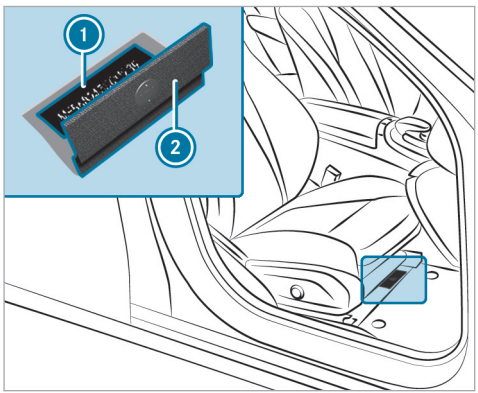

1 Imprinted VIN (vehicle identification number)
2 Floor covering

Additional plates

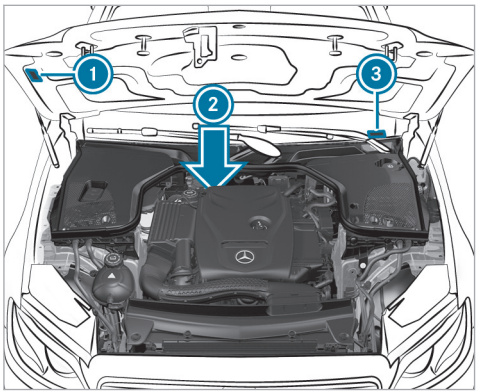

1 Plate with information about emissions testing, including confirmation of emissions guidelines at the U.S. federal level as well as for California
2 Engine number stamped into the crankcase
3 VIN (vehicle identification number) as a label at the lower edge of the windshield

Operating fluids

Notes on operating fluids

WARNING Risk of injury due to harmful operating fluids

Operating fluids can be toxic.

- When using, storing and disposing of operating fluids, observe the imprints on the respective original containers.
- Always keep operating fluids in the sealed original container.
- Always keep children away from operating fluids.

ENVIRONMENTAL NOTE Pollution of the environment due to irresponsible disposal of operating fluids

Incorrect disposal of operating fluids can cause considerable damage to the environment.

- Dispose of operating fluids in an environmentally responsible manner.

Operating fluids include the following:

- Fuels
- Lubricants
- Coolant
- Brake fluid
- Windshield washer fluid
- Climate control system refrigerant

Only use products approved by Mercedes-Benz. Damage caused by the use of products that have not been approved is not covered by the Mercedes-Benz warranty or goodwill gestures.

The operating fluids approved by Mercedes-Benz can be identified by the following inscriptions on the container:

- MB-Freigabe (e.g. MB-Freigabe 229.51)
- MB-Approval (e.g. MB-Approval 229.51)

Further information on approved operating fluids:

- in the Mercedes-Benz Specifications for Operating Fluids by entering the designation
  - At https://operatingfluids.mercedes-benz.com
- At a qualified specialist workshop

⚠ WARNING Risk of fire or explosion from fuel

Fuels are highly flammable.

- ▶ Fire, open flames, smoking and creating sparks must be avoided.
- ▶ Before and during refueling, switch off the vehicle and, if installed, the stationary heater.

⚠ WARNING Risk of injury from fuels

Fuels are poisonous and hazardous to your health.

- ▶ Do not swallow fuel or let it come into contact with skin, eyes or clothing.
- ▶ Do not inhale fuel vapor.
- ▶ Keep children away from fuel.
- ▶ Keep doors and windows closed during the refueling process.

If you or other people come into contact with fuel, observe the following:

- ▶ Immediately rinse fuel off your skin with soap and water.
- ▶ If fuel comes into contact with your eyes, immediately rinse them thoroughly with clean water. Seek medical attention immediately.
- ▶ If you swallow fuel, seek medical attention immediately. Do not induce vomiting.
- ▶ Change immediately out of clothing that has come into contact with fuel.

Flexible-fuel vehicles can be refueled with the following fuel types:

- premium-grade unleaded gasoline
- E85 fuel
- a mixture of E85 fuel and premium-grade unleaded gasoline

Flexible-fuel vehicles can be identified by the **Ethanol up to E85** sticker on the inside of the fuel filler flap.

Depending on the country, the fuels you can use in your vehicle may differ from the information in the Operator's Manual. The fuels that have been approved for your vehicle can be found on the instruction label on the inside of the fuel filler flap.

Fuel

Information on fuel quality for vehicles with gasoline engines

Observe the notes on operating fluids (→ page 691).

! **NOTE** Damage caused by the wrong fuel

Even small amounts of the wrong fuel could result in damage to the fuel system, the engine and the emission control system.

- ▶ Only refuel with low-sulfur spark-ignition engine fuel.

This fuel may contain up to 10% ethanol by volume. Your vehicle is suitable for use with E10 fuel.

Never refuel with one of the following fuels:

- diesel
- Gasoline with more than 10% ethanol by volume, e.g. E15, E85, E100
- Gasoline with more than 3% methanol by volume, e.g. M15, M30, M85, M100
- Gasoline with additives containing metal

If you have accidentally refueled with the wrong fuel:

- ▶ Do not switch on the vehicle.
- ▶ Consult a qualified specialist workshop.

If the available fuel is not sufficiently low in sulfur, it may produce unpleasant odors.

ⓘ **Vehicles with M256 gasoline engines:** if you are using 91 AKI/95 RON, there may be slight limitations in performance that have no further consequences.

Refuel only with fuel that has at least the octane number specified on the information label on the fuel filler flap.

For maximum engine output: refuel only with premium-grade unleaded gasoline with an octane number of at least 91 AKI/95 RON.

As a temporary measure, if the recommended fuel is not available, you may also refuel with regular unleaded gasoline with an octane number of at least 87 AKI/91 RON. This may reduce engine output and increase fuel consumption.

Never refuel using gasoline with an even lower RON.

! **NOTE** Premature engine wear through unleaded regular gasoline

Impairment of the longevity and performance of the engine.

If unleaded premium grade gasoline is unavailable and you have to refuel using unleaded regular gasoline:

- ▶ Only fill the fuel tank to half full with unleaded regular gasoline and refill as

soon as possible with unleaded premium grade gasoline.
- ▶ Do not drive at the maximum design speed.
- ▶ Avoid sudden acceleration and engine speeds over 3000 rpm.

Further information on fuel is available in the following locations:

- At a gas station
- At a qualified specialist workshop
- On the https://www.mbusa.com (USA only)

Information on additives in gasoline (vehicles with gasoline engine)

Observe the notes on operating fluids (→ page 691).

! NOTE Damage from use of unsuitable additives

Even small amounts of the wrong additive may lead to malfunctions occurring.

- ▶ Only add cleaning additives recommended by Mercedes-Benz to the fuel.

Mercedes-Benz recommends that you use brand-name fuels with additives.

In some countries, the fuel available may not have sufficient additives. Deposits could build up in the fuel injection system as a result. In this case, in consultation with a qualified specialist workshop (e.g. an authorized Mercedes-Benz Service Center), mix the fuel with the cleaning additive recommended by Mercedes-Benz. Observe the notes and mixing ratios indicated on the tank.

Tank content and fuel reserve

Total fuel tank capacity

Model	
All models	17.4 gal (66.0 liters)

Fuel tank reserve

Model	
All models	1.8 gal (7.0 liters)

Engine oil

Notes on engine oil

Observe the notes on operating fluids (→ page 691).



! NOTE Engine damage caused by an incorrect oil filter, incorrect oil or additives

- ▶ Do not use engine oils or oil filters other than those which meet the specifications necessary for the prescribed service intervals.

- Do not alter the engine oil or oil filter in order to achieve longer change intervals than prescribed.
- Do not use additives.
- Have the engine oil changed after the prescribed intervals.

Mercedes-Benz recommends having the oil changed at a qualified specialist workshop.

Only use engine oils approved for your vehicle by Mercedes-Benz.

Engine oil quality and filling capacity

Engine oil specification

Model	MB-Freigabe or MB-Approval
All models	229.71 229.72*

* recommended for lowest possible fuel consumption (lowest SAE viscosity class in each case; observe possible restrictions of the approved SAE viscosity classes)

E 350, E 350 4MATIC: use only SAE 0W-20 viscosity class engine oils.

ⓘ If the engine oils listed in the table are not available, you may add a maximum of 1.1 US qt (1.0 liter) of the following engine oils once only.
MB-Freigabe or MB-Approval 229.51, 229.52, 229.61 or ACEA C5

Engine oil filling capacity

Model	Capacity
E 450 4MATIC	10.5 US qt (9.9 liters)
All other models	6.3 US qt (6.0 liters)

The specified filling capacity refers to an oil change with the oil filter.

Notes on brake fluid

Observe the notes on operating fluids (→ page 691).

⚠ WARNING Risk of an accident due to vapor pockets forming in the brake system

The brake fluid constantly absorbs moisture from the air. This lowers the boiling point of the brake fluid. If the boiling point is too low, vapor pockets may form in the brake system when the brakes are applied hard.

This causes the braking effect to be impaired.

- Have the brake fluid renewed at the specified intervals.

Have the brake fluid regularly replaced at a qualified specialist workshop.
Only use a brake fluid approved by Mercedes-Benz according to MB-Freigabe or MB-Approval 331.0.

Coolant

Notes on coolant

Observe the notes on operating fluids (→ page 691).

WARNING - Risk of fire and injury from antifreeze

If antifreeze comes into contact with hot component parts in the engine compartment, it may ignite.

- ▶ Allow the engine to cool down before adding antifreeze.
- ▶ Make sure that no antifreeze spills out next to the filler opening.
- ▶ Thoroughly clean off any antifreeze from component parts before starting the vehicle.

NOTE Damage caused by incorrect coolant

- ▶ Only use coolant that has been premixed with the required antifreeze protection.

Information on coolant is available at the following locations:

- In the Mercedes-Benz Specification for Operating Fluids 320.1
  - At https://operatingfluids.mercedes-benz.com
- At a qualified specialist workshop

NOTE Overheating at high outside temperatures

If an inappropriate coolant is used, the cooling system is not sufficiently protected against overheating and corrosion at high outside temperatures.

- ▶ Only use coolant approved for Mercedes-Benz.
- ▶ Observe the instructions in the Mercedes-Benz Specifications for Operating Fluids 320.1.

Have the coolant regularly replaced at a qualified specialist workshop.

Proportion of antifreeze concentrate in the cooling system:

- A minimum of 50% (antifreeze protection down to about -35 °F (-37 °C))
- A maximum of 55% (antifreeze protection down to -49 °F (-45 °C))

Coolant filling capacity

Coolant

Model	Capacity
E 450 4MATIC	19.0 US qt (18.0 liters)
All other models	14.8 US qt (14.0 liters)

Notes on windshield washer fluid

Observe the notes on operating fluids (→ page 691).

WARNING - Risk of fire and injury from windshield washer concentrate

Windshield washer concentrate is highly flammable. It could ignite if it comes into contact with hot engine component parts or the exhaust system.

▶ Make sure that no windshield washer concentrate spills out next to the filler opening.

! **NOTE** Damage to the exterior lighting due to unsuitable windshield washer fluid

Unsuitable windshield washer fluid may damage the plastic surface of the exterior lighting.

▶ Only use windshield washer fluid which is also suitable for use on plastic surfaces, e.g. MB SummerFit or MB WinterFit.

! **NOTE** Blocked spray nozzles caused by mixing windshield washer fluids

▶ Do not mix MB SummerFit and MB WinterFit with other windshield washer fluids.

Do not use distilled or de-ionised water. Otherwise, the fill level sensor may be triggered erroneously.

Recommended windshield washer fluid:

- Above freezing point: e.g. MB SummerFit
- Below freezing point: e.g. MB WinterFit

For the correct mixing ratio, refer to the information on the antifreeze container.

Mix washing water with windshield washer fluid all year round.

Refrigerant

Notes on refrigerant

Observe the notes on operating fluids (→ page 691).

! **NOTE** Damage due to incorrect refrigerant

If a non-approved refrigerant is used, the climate control system may be damaged.

▶ Use only R-1234yf refrigerant.

! **NOTE** Damage to the climate control system due to incorrect refrigerant compressor oil

▶ Only use refrigerant compressor oil that has been approved by Mercedes-Benz.

▶ Do not mix the approved refrigerant compressor oil with a different refrigerant compressor oil.

Work on the climate control system may be carried out only at a qualified specialist workshop. All applicable regulations, as well as SAE standard J639, must be adhered to.

The information label for the climate control system regarding the refrigerant type and the refrigerant compressor oil (PAG oil) is located on the inside of the hood.

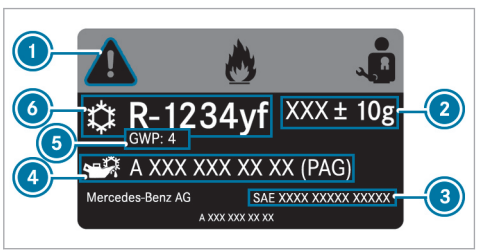

Information label

① Hazard and service warning symbols

② Refrigerant filling capacity
③ Applicable standards
④ PAG oil part number
⑤ GWP (Global Warming Potential) of the refrigerant used
⑥ Refrigerant type

Symbols ① indicate the following:

- Possible dangers
- Maintenance work to be carried out at a qualified specialist workshop

Filling capacity for refrigerant and PAG oil

Refrigerant filling capacity

Model	
All models	21.2 ± 0.4 oz (600 ± 10 g)

Filling capacity for PAG oil

Model	
All models	2.8 ± 0.4 oz (80 ± 10 g)

Vehicle data

Vehicle dimensions

The heights specified may vary as a result of the following factors:

- Tires
- Load
- Condition of the suspension
- Optional equipment

Vehicle dimensions (E 350)

E 350	
Vehicle length	194.9 in (4951 mm)
Vehicle width including exterior mirrors	81.3 in (2065 mm)
Wheelbase	116.6 in (2961 mm)
Vehicle height	57.9 in (1470 mm)
Turning radius	38.1 ft (11.6 m)

Vehicle dimensions (all other models)

All other models	
Vehicle length	194.9 in (4951 mm)
Vehicle width including exterior mirrors	81.3 in (2065 mm)
Wheelbase	116.6 in (2961 mm)
Vehicle height	57.9 in (1470 mm)
Turning radius	39.4 ft (12.0 m)

Weights and loads

Bear in mind that items of optional equipment increase the curb weight and reduce the payload.

Vehicle-specific weight information can be found on the vehicle identification plate.

Display messages

Introduction

Information about display messages

Display messages appear on the driver's display.

Display messages with graphical symbols are simplified in the Operator's Manual and may differ from the symbols on the driver's display. The driver's display shows high-priority display messages in red. Certain display messages are accompanied by a warning tone.

Please act in accordance with the display messages and follow the additional notes in the Operator's Manual.

For some display messages, symbols will also be shown:

- ⓘ Further information
- × Hide display message

With the left-hand Touch Control, you can select the respective symbol by swiping to the left or right. Pressing ⓘ displays further information on the central display. Press the × symbol to hide the display message.

Display messages to be acknowledged can be hidden by pressing the back button ↩ or with the left-hand Touch Control. The display messages will then be stored in the message memory.

Rectify the cause of a display message as quickly as possible.

High-priority display messages cannot be hidden. The driver's display will show these display messages continuously until the cause of the display message has been rectified.

Calling up saved display messages

Driver's display:

→ Service

The Message Memory: XX message appears on the driver's display.

- ▶ Scroll through the display messages by swiping upwards or downwards on the left-hand Touch Control.
- ▶ **To exit the display:** press the ↩ back button.

Occupant safety

Display messages	Possible causes/consequences and ▶ Solutions
 Restraint System Malfunction Service Required	* The restraint system is malfunctioning (→ page 98). **⚠ WARNING** Risk of injury due to malfunctions in the restraint system Components in the restraint system may be activated unintentionally or not deploy as planned in an accident. ▶ Have the restraint system checked and repaired immediately at a qualified specialist workshop. Recognition of a restraint system malfunction: • the restraint system warning lamp does not light up when the vehicle is switched on • the restraint system warning lamp lights up continuously or repeatedly during a journey ▶ Consult a qualified specialist workshop immediately.
 Front Left Malfunction Service Required	* The restraint system is malfunctioning (→ page 98). **⚠ WARNING** Risk of injury due to malfunctions in the restraint system Components in the restraint system may be activated unintentionally or not deploy as planned in an accident. ▶ Have the restraint system checked and repaired immediately at a qualified specialist workshop. Recognition of a restraint system malfunction: • the restraint system warning lamp does not light up when the vehicle is switched on

Display messages	Possible causes/consequences and ▶ Solutions
	• the [restraint system warning lamp] restraint system warning lamp lights up continuously or repeatedly during a journey ▶ Consult a qualified specialist workshop immediately.
 Front Right Malfunction Service Required	* The restraint system is malfunctioning (⟶ page 98). **⚠ WARNING** Risk of injury due to malfunctions in the restraint system Components in the restraint system may be activated unintentionally or not deploy as planned in an accident. ▶ Have the restraint system checked and repaired immediately at a qualified specialist workshop. Recognition of a restraint system malfunction: • the [restraint system warning lamp] restraint system warning lamp does not light up when the vehicle is switched on • the [restraint system warning lamp] restraint system warning lamp lights up continuously or repeatedly during a journey ▶ Consult a qualified specialist workshop immediately.
 Second Row of Seats, Left Malfunction Service Required	* The restraint system is malfunctioning (⟶ page 98). **⚠ WARNING** Risk of injury due to malfunctions in the restraint system Components in the restraint system may be activated unintentionally or not deploy as planned in an accident. ▶ Have the restraint system checked and repaired immediately at a qualified specialist workshop.

Display messages	Possible causes/consequences and ▶ Solutions
	Recognition of a restraint system malfunction: • the [restraint system warning lamp] does not light up when the vehicle is switched on • the [restraint system warning lamp] lights up continuously or repeatedly during a journey ▶ Consult a qualified specialist workshop immediately.
 Second Row of Seats, Right Malfunction Service Required	* The restraint system is malfunctioning (→ page 98). **⚠ WARNING** Risk of injury due to malfunctions in the restraint system Components in the restraint system may be activated unintentionally or not deploy as planned in an accident. ▶ Have the restraint system checked and repaired immediately at a qualified specialist workshop. Recognition of a restraint system malfunction: • the [restraint system warning lamp] does not light up when the vehicle is switched on • the [restraint system warning lamp] lights up continuously or repeatedly during a journey ▶ Consult a qualified specialist workshop immediately.
 Left Window Airbag Malfunction Service Required	* The restraint system is malfunctioning (→ page 98). **⚠ WARNING** Risk of injury or fatal injury due to a malfunction in the window curtain airbag The window curtain airbag might be triggered unintentionally or might not be triggered at all in the event of an accident.

Display messages	Possible causes/consequences and ▶ Solutions
	▶ Have the window curtain airbag checked and repaired immediately at a qualified specialist workshop. ▶ Consult a qualified specialist workshop immediately.
 Right Window Airbag Malfunction Service Required	* The restraint system is malfunctioning (→ page 98). ⚠ **WARNING** Risk of injury or fatal injury due to a malfunction in the window curtain airbag The window curtain airbag might be triggered unintentionally or might not be triggered at all in the event of an accident. ▶ Have the window curtain airbag checked and repaired immediately at a qualified specialist workshop. ▶ Consult a qualified specialist workshop immediately.
Front Passenger Airbag Disabled See Operator's Manual	* The front passenger air bag and the front passenger knee air bag have been disabled even though an adult or a person of adult build is on the front passenger seat. If additional forces are applied to the seat, the weight the system detects may be too low. ⚠ **WARNING** Risk of injury or fatal injury due to a disabled front passenger airbag If the front passenger airbag is disabled, the front passenger airbag will not be deployed in the event of an accident and cannot perform its intended protective function. A person in the front passenger seat could then, for example, come into contact with the vehicle's interior, especially if the person is sitting too close to the cockpit.

Display messages	Possible causes/consequences and ▶ Solutions
	▶ Make sure, both before and during the journey, that the status of the front passenger airbag is correct. ▶ Stop the vehicle immediately in accordance with the traffic conditions. ▶ Make sure that no objects are trapped under the front passenger seat. ▶ Check the status of the automatic front passenger air bag shutoff (→ page 100). ▶ If necessary, consult a qualified specialist workshop immediately.
Front Passenger Airbag Enabled See Operator's Manual	* The front passenger air bag and the front passenger knee air bag will be enabled while the vehicle is in motion in the following situations: • even when a child, a small adult or an object weighing less than the system weight threshold is located on the front passenger seat • even when the front passenger seat is not occupied The system may detect objects or forces that are adding to the weight applied to the seat. ⚠ **WARNING** Risk of injury or death when using a child restraint system while the front passenger airbag is enabled If you secure a child in a child restraint system on the front passenger seat and the front passenger airbag is enabled, the front passenger airbag can deploy in the event of an accident. The child could be struck by the airbag. ▶ Ensure, both before and during the journey, that the status of the front passenger airbag is correct.

Display messages	Possible causes/consequences and ▶ Solutions
	NEVER use a rearward facing child restraint on a seat protected by an ACTIVE AIRBAG in front of it, DEATH or SERIOUS INJURY to the CHILD can occur. ▶ Stop the vehicle immediately in accordance with the traffic conditions. ▶ Make sure that no objects are trapped under the front passenger seat. ▶ Check the status of the automatic front passenger air bag shutoff (→ page 100). ▶ If necessary, consult a qualified specialist workshop immediately.
Occupant Presence Reminder Inoperative	* The occupant presence reminder is malfunctioning ▶ Consult a qualified specialist workshop.
 Do Not Leave People or Animals in the Vehicle	* The occupant presence reminder suspects that there are persons or animals in the rear passenger compartment of the vehicle. ▶ Do not leave any persons or animals behind when leaving the vehicle.

SmartKey

Display messages	Possible causes/consequences and ▶ Solutions
 Obtain a New Key	* Have the key replaced. ▶ Consult a qualified specialist workshop.
 Replace Key Battery	* The key battery is discharged. ▶ Replace the battery (→ page 130).
 Key Not Detected (white display message)	* The key is currently undetected. ▶ Change the location of the key in the vehicle. ▶ Try to start the vehicle. ▶ If the key is still not detected, place it in the slot for starting with the key (→ page 237). ▶ Start the vehicle.

Display messages	Possible causes/consequences and ▶ Solutions
 Key Not Detected (red display message)	* The key can no longer be detected during a journey and may no longer be in the vehicle. If the key is no longer in the vehicle and you switch off the vehicle: • You can no longer start the vehicle. • You cannot centrally lock the vehicle. ▶ Ensure that the key is in the vehicle. If the key is in the vehicle and is still not detected: ▶ Stop the vehicle immediately in accordance with the traffic conditions. ▶ Place the key in the slot for starting the engine with the key (→ page 237). The key battery is weak or discharged. ▶ Check the battery using the indicator lamp (→ page 128). ▶ Replace the key battery, if necessary (→ page 130).
 Initializing Key Please Wait	* The vehicle is processing in order to teach in the new key. ▶ Wait until processing is complete.

Display messages	Possible causes/consequences and ▶ Solutions
 Don't Forget Your Key	* A warning tone will also sound. This message reminds you to take your key with you when you leave the vehicle.
Place the Key in the Marked Space See Operator's Manual	* Key detection is malfunctioning. ▶ Change the location of the key in the vehicle. ▶ Place the key in the slot for starting the engine with the key (→ page 237).
Searching for Key in Stowage Tray or Digital Vehicle Key in Inductive Charging Bracket... See Operator's Manual	* The key was not detected. ▶ Place the key in the storage compartment (→ page 237). If the key is still not detected: ▶ Consult a qualified specialist workshop. * The Digital Vehicle Key has not been detected. ▶ Place the Digital Vehicle Key in the stowage space (→ page 235). If the Digital Vehicle Key is still not detected: ▶ Consult a qualified specialist workshop.

Display messages	Possible causes/consequences and ▶ Solutions
 Key Not Detected	* The SmartKey or the Digital Vehicle Key is currently undetected. ▶ Change the location of the SmartKey or the Digital Vehicle Key in the vehicle. ▶ Try to start the vehicle. ▶ If the SmartKey is still not detected, place the SmartKey in the marked space (→ page 237). ▶ If the Digital Vehicle Key is still not detected, place the Digital Vehicle Key in the marked space (→ page 235). ▶ Start the vehicle.
 Key Not Detected Place Digital Vehicle Key in Mobile Phone Cradle	* The SmartKey or the Digital Vehicle Key are no longer detected during a journey and may no longer be in the vehicle. If the SmartKey or the Digital Vehicle Key is no longer in the vehicle and you switch off the vehicle: • You can no longer start the vehicle. • You cannot centrally lock the vehicle. ▶ Ensure that the SmartKey or the Digital Vehicle Key is in the vehicle. If the SmartKey or the Digital Vehicle Key is in the vehicle and is still not detected: ▶ Stop the vehicle immediately in accordance with the traffic conditions. ▶ Place the SmartKey in the marked space (→ page 237). ▶ Place the Digital Vehicle Key in the stowage space (→ page 235). The SmartKey battery is weak or discharged. ▶ Check the battery using the indicator lamp (→ page 128).

Display messages	Possible causes/consequences and ▶ Solutions
	▶ Replace the SmartKey battery, if necessary (→ page 130). The condition of charge of the rechargeable battery of the end device with the Digital Vehicle Key is too low. ▶ Immediately charge the rechargeable battery of the Digital Vehicle Key end device. Otherwise, it may not be possible to restart the vehicle after it has been switched off. If the SmartKey or the Digital Vehicle Key is still not detected: ▶ Consult a qualified specialist workshop.
 Replace SmartKey See Operator's Manual	* If the Digital Vehicle Key is not renewed, the vehicle cannot be unlocked/locked or started. ▶ The system automatically renews the Digital Vehicle Key. When the renewal is complete, the message disappears and the Digital Vehicle Key is available again.
 Take SmartKey With You	* A warning tone will also sound. This message reminds you to take your SmartKey with you when you leave the vehicle. This also applies to the Digital Vehicle Key.

Display messages	Possible causes/consequences and ▶ Solutions
 Digital Vehicle Key Charge Device	* The condition of charge of the rechargeable battery of the end device with the Digital Vehicle Key is too low. ▶ Immediately charge the rechargeable battery of the Digital Vehicle Key end device.
 Initializing Key Please Wait	* The vehicle is processing in order to teach in the new Digital Vehicle Key. ▶ Wait until processing is complete.
 Key Does Not Belong to Vehicle	* The vehicle cannot be unlocked/locked or started. ▶ Use the Digital Vehicle Key belonging to the vehicle.

Lights

Display messages	Possible causes/consequences and ▶ Solutions
 Malfunction See Operator's Manual	* The exterior lighting is malfunctioning. ▶ Consult a qualified specialist workshop.
 Automatic Driving Lights Inoperative	* The light sensor for automatic driving lights is malfunctioning. ▶ Consult a qualified specialist workshop.
 Switch On Headlights	* You are driving without low-beam headlamps. ▶ Turn the light switch to the ≡D or AUTO position.

Display messages	Possible causes/consequences and ▶ Solutions
 Switch Off Lights	* You are leaving the vehicle and the lights are still switched on. ▶ Turn the light switch to the AUTO position.
DIGITAL LIGHT Functions Limited	* The DIGITAL LIGHT system is malfunctioning. The lighting system will continue to work even without the functions of the DIGITAL LIGHT system. ▶ Consult a qualified specialist workshop.
Adaptive Highbeam Assist Currently Unavailable See Operator's Manual	* Adaptive Highbeam Assist is temporarily unavailable. The system limits have been reached (→ page 206). Once the cause of the problem is no longer present, the system will be available again. The Adaptive Highbeam Assist Now Available display message will appear. ▶ Drive on. ▶ Operate the high beam manually until Adaptive Highbeam Assist is available again.
Adaptive Highbeam Assist Inoperative	* Adaptive Highbeam Assist is malfunctioning. ▶ Drive on or ▶ Stop the vehicle in accordance with the traffic conditions and restart the vehicle. ▶ If the display message does not disappear: consult a qualified specialist workshop. ▶ Until then, operate the high beam manually.

Display messages	Possible causes/consequences and ▶ Solutions
Adaptive Highbeam Assist Plus Currently Unavailable See Operator's Manual	* Adaptive Highbeam Assist Plus is temporarily unavailable. The system limits have been reached (→ page 207). Once the cause of the problem is no longer present, the system will be available again. The Adaptive Highbeam Assist Plus Now Available display message will appear. ▶ Drive on. ▶ Operate the high beam manually until Adaptive Highbeam Assist Plus is available again.
Adaptive Highbeam Assist Plus Inoperative	* Adaptive Highbeam Assist Plus is malfunctioning. ▶ Drive on. or ▶ Stop the vehicle in accordance with the traffic conditions and restart the vehicle. ▶ If the display message does not disappear: consult a qualified specialist workshop. ▶ Until then, operate the high beam manually.
Hazard Warning Light Malfunction	* The hazard warning lamp switch is malfunctioning. ▶ Consult a qualified specialist workshop.
 Parking Light Front Left	* The front left parking light is malfunctioning. ▶ Consult a qualified specialist workshop.

Display messages	Possible causes/consequences and ▶ Solutions
 Parking Light Front Right	* The front right parking light is malfunctioning. ▶ Consult a qualified specialist workshop.
 Check Left Low Beam	* The left low beam is malfunctioning. ▶ Consult a qualified specialist workshop.
 Check Right Low Beam	* The right low beam is malfunctioning. ▶ Consult a qualified specialist workshop.
 Check Left High Beam	* The left high beam is malfunctioning. ▶ Consult a qualified specialist workshop.

Display messages	Possible causes/consequences and ▶ Solutions
 Check Right High Beam	* The right high beam is malfunctioning. ▶ Consult a qualified specialist workshop.
 Check Left Daytime Running Light	* The left daytime running lights are malfunctioning. ▶ Consult a qualified specialist workshop.
 Check Right Daytime Running Light	* The right-hand daytime running lights are malfunctioning. ▶ Consult a qualified specialist workshop.
 Check Left Cornering Light	* The left cornering light is malfunctioning. ▶ Consult a qualified specialist workshop.

Display messages	Possible causes/consequences and ▶ Solutions
 Check Right Cornering Light	* The right cornering light is malfunctioning. ▶ Consult a qualified specialist workshop.
 Turn Signal Indicator, Front Left	* The front left turn signal lamp is malfunctioning. ▶ Consult a qualified specialist workshop.
 Turn Signal Indicator, Rear Left	* The rear left turn signal lamp is malfunctioning. ▶ Consult a qualified specialist workshop.

Display messages	Possible causes/consequences and ▶ Solutions
 Turn Signal Indicator, Front Right	* The front right turn signal lamp is malfunctioning. ▶ Consult a qualified specialist workshop.
 Turn Signal Indicator, Rear Right	* The rear right turn signal lamp is malfunctioning. ▶ Consult a qualified specialist workshop.
 Turn Signal Indicator, Left Mirror	* The turn signal lamp on the left mirror is malfunctioning. ▶ Consult a qualified specialist workshop.

Display messages	Possible causes/consequences and ▶ Solutions
 Turn Signal Indicator, Right Mirror	* The turn signal lamp on the right mirror is malfunctioning. ▶ Consult a qualified specialist workshop.
 Brake Light Left	* The left brake light is malfunctioning. ▶ Consult a qualified specialist workshop.
 Brake Light Right	* The right brake light is malfunctioning. ▶ Consult a qualified specialist workshop.
 Center Brake Light	* The third brake light is malfunctioning. ▶ Consult a qualified specialist workshop.

Display messages	Possible causes/consequences and ▶ Solutions
 Tail Light Left	* The left tail light is malfunctioning. ▶ Consult a qualified specialist workshop.
 Tail Light Right	* The right tail light is malfunctioning. ▶ Consult a qualified specialist workshop.
 Reversing Light	* The reversing light is malfunctioning. ▶ Consult a qualified specialist workshop.
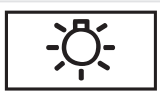 Rear Fog Light	* The rear fog light is malfunctioning. ▶ Consult a qualified specialist workshop.

Display messages	Possible causes/consequences and ▶ Solutions
 License Plate Light	* The license plate lamp is malfunctioning. ▶ Consult a qualified specialist workshop.
Indicator Lamp in Driver's Display Inoperative Service Required	* An indicator lamp on the driver's display is defective. ▶ Consult a qualified specialist workshop.

Drive system

Display messages	Possible causes/consequences and ▶ Solutions
Reduced Drive System Performance See Operator's Manual	* The drive system switches to emergency operation mode due to a malfunction. ▶ Drive on carefully. ▶ Consult a qualified specialist workshop.

Vehicle

Display messages	Possible causes/consequences and ▶ Solutions
	* The driver's display is inoperative due to a failed software update. The display message will be shown every time the engine is started. **⚠ WARNING** Risk of accident if the driver display fails If the driver display has failed or is malfunctioning, function restrictions in systems relevant to safety cannot be detected. The operating safety of your vehicle may be impaired. ▶ Drive on carefully. ▶ Have the vehicle checked immediately at a qualified specialist workshop. If the operating safety of your vehicle is impaired, park the vehicle immediately and safely. Contact a qualified specialist workshop. If the driver's display fails, you may not recognize function restrictions affecting systems relevant to safety or the speed display, for example. The operating safety of the vehicle may be impaired (→ page 403). ▶ Have the vehicle checked by a qualified specialist workshop immediately.
Cannot Start Vehicle See Operator's Manual	* The vehicle cannot be started. ▶ Switch the vehicle off and switch it back on. ▶ If the display message still appears, consult a qualified specialist workshop.

Display messages	Possible causes/consequences and ▶ Solutions
	* **Vehicles with 48 V on-board electrical system:** the state of charge of the 48 V battery is too low. You can no longer start the vehicle. ▶ Switch off electrical consumers that are not required. ▶ Connect a suitable charger approved for Mercedes-Benz with sufficient charging power to the jump-start connection point of the 12 V battery (→ page 49). The 48 V battery is charged via the voltage converter in the vehicle.
Vehicle Ready to Drive Shutdown Occurs When Locked or After a Few Minutes	* You are leaving the vehicle in a ready-to-drive state. ▶ Get out of the vehicle, secure it against rolling away and take the key with you. ▶ If you do not leave the vehicle, switch off the electrical consumers, e.g. the seat heating. Otherwise, the 12-V battery may discharge and starting the engine may be possible only with the help of a second battery (starting assistance).
Vehicle Ready to Drive Shutdown Occurs When Locked or Automatically in XX Mins	* You are about to leave the vehicle and the engine is running. The vehicle will switch off automatically in 20 minutes. ▶ To prevent the vehicle from switching off automatically, confirm the message in the central display of the multimedia system. * You are in the vehicle. Park position P is engaged and the engine is running. After a certain time of being at a standstill, this display message will appear in the driver's display. The vehicle will then be automatically switched off after a total parked time of 20 minutes. ▶ To prevent the vehicle from switching off automatically, confirm the message in the central display of the multimedia system.

Display messages	Possible causes/consequences and ▶ Solutions
Head-up Display Currently Unavailable See Operator's Manual	* The head-up display is temporarily unavailable. Possible causes are: • malfunctions in the power supply • signal interference ▶ Stop in accordance with the traffic conditions and switch the vehicle off and on again. ▶ If the display message still appears, consult a qualified specialist workshop.
Head-up Display Inoperative	* The head-up display has an internal error. ▶ Consult a qualified specialist workshop.
Head-up Display Brightness Currently Reduced See Operator's Manual	* The brightness of the head-up display is reduced. Possible causes: • Dirt on the windshield in the camera's field of vision • Faulty exterior brightness signals ▶ Switch on the windshield wipers. ▶ Clean the windshield if necessary. ▶ Switch the vehicle off and switch it back on ▶ If the display message still appears, consult a qualified specialist workshop.

Display messages	Possible causes/consequences and ▶ Solutions
 Steering Malfunction Drive Carefully Service Required	* A power steering malfunction has occurred. Steering characteristics may be impaired as a result. ▶ Drive on carefully. ▶ Consult a qualified specialist workshop.
 Steering Malfunction Increased Physical Effort See Operator's Manual	* The power steering assistance is malfunctioning. ⚠ **WARNING** Risk of an accident due to altered steering characteristics If the power assistance of the steering fails partially or completely, you will need to use more force to steer. ▶ If safe steering is possible, drive on carefully. ▶ Visit or consult a qualified specialist workshop immediately. ▶ If safe steering is possible, drive on carefully. ▶ Visit or consult a qualified specialist workshop immediately.
 Steering Malfunction Stop Immediately See Operator's Manual	* The steering is malfunctioning. Steering capability is significantly impaired. ⚠ **WARNING** Risk of accident if steering capability is impaired If the steering does not function as intended, the vehicle's operating safety is jeopardized.

Display messages	Possible causes/consequences and ▶ Solutions
	▶ Pull over and stop the vehicle safely as soon as possible, paying attention to road and traffic conditions. Do not continue driving under any circumstances. ▶ Consult a qualified specialist workshop. ▶ Stop the vehicle immediately in accordance with the traffic conditions. Do not continue driving under any circumstances. ▶ Consult a qualified specialist workshop.
 Rear Axle Steering Currently Malfunctioning	* The rear axle steering is temporarily unavailable. The turning circle may become wider. ▶ Stop the vehicle in accordance with the traffic conditions and restart the vehicle. If the display message does not disappear: ▶ Drive on carefully. ▶ Consult a qualified specialist workshop.
 Rear Axle Steering Malfunction Service Required	* The rear axle steering is malfunctioning. The rear axle has no steering capability. The steering wheel may be at an angle when you drive in a straight line. ▶ Adapt your speed and drive on carefully. ▶ Consult a qualified specialist workshop immediately.

Display messages	Possible causes/consequences and ▶ Solutions
 Rear Axle Steering Malfunction Stop Immediately	* The rear axle steering is malfunctioning. The rear axle has no steering capability. The steering wheel may be tilted considerably when you drive in a straight line. Depending on the steering wheel's tilted position, the steering wheel will also vibrate and a continuous warning tone will sound. **⚠ WARNING** Risk of accident if steering capability is impaired If the steering does not function as intended, the vehicle's operating safety is jeopardized. ▶ Pull over and stop the vehicle safely as soon as possible, paying attention to road and traffic conditions. Do not continue driving under any circumstances. ▶ Consult a qualified specialist workshop. ▶ Stop the vehicle immediately in accordance with the traffic conditions. Do not continue driving. ▶ When stopping, bear the enlarged vehicle width in mind. ▶ Consult a qualified specialist workshop.
Snow Chain Mode Maximum Speed Exceeded	* The maximum permissible speed for snow chain mode has been exceeded. ▶ Drive more slowly.
Active Hood Malfunction See Operator's Manual	* The active hood (pedestrian protection) is malfunctioning or inoperative after having already been triggered. ▶ Consult a qualified specialist workshop.

Display messages	Possible causes/consequences and ▶ Solutions
Ambient Lighting Warning Support Inoperative	* The ambient lighting may not provide full visual warning support. ▶ Lock the vehicle and unlock it again after a few minutes. ▶ If the display message appears regularly, contact a qualified specialist workshop.
	* At least one door is open. ▶ Close all doors.
	* The hood is open. ⚠ **WARNING** Risk of accident due to driving with the hood unlocked The hood may open and block your view. ▶ Never release the hood when driving. ▶ Before every trip, ensure that the hood is locked. ▶ Stop the vehicle immediately in accordance with the traffic conditions. ▶ Close the hood.
	* The trunk lid is open.

Display messages	Possible causes/consequences and ▶ Solutions
	DANGER Risk of exhaust gas poisoning Combustion engines emit poisonous exhaust gases such as carbon monoxide. Exhaust gases can enter the vehicle interior if the trunk lid is open when the engine is running, especially if the vehicle is in motion. ▶ Always switch off the engine before opening the trunk lid. ▶ Never drive with the trunk lid open. ▶ Close the trunk lid.
Function Blocked by Folded Center Backrest	* You cannot electrically unlock the left seat backrest. ▶ Fold the center seat backrest back until it engages.
 Rear Left Backrest Not Latched	* The seat backrest of the corresponding seat is not engaged. ▶ Fold the seat backrest back until it engages.
 Rear Right Backrest Not Latched	* The seat backrest of the corresponding seat is not engaged. ▶ Fold the seat backrest back until it engages.

Display messages	Possible causes/consequences and ▶ Solutions
 Add Washer Fluid	* The washer fluid level in the washer fluid reservoir has dropped below the minimum. ▶ Add washer fluid (→ page 23).
Windshield Wiper Malfunction	* The windshield wiper is malfunctioning. ▶ Restart the vehicle. If the display message still appears: ▶ Consult a qualified specialist workshop.

Engine

Display messages	Possible causes/consequences and ▶ Solutions
To Switch Off Vehicle Press and Hold Start/Stop Button for at Least 3 Seconds or Press 3 Times	* You have pressed the start/stop button while the vehicle is in motion. ▶ Information about switching off the vehicle while driving (→ page 234).

Display messages	Possible causes/consequences and ▶ Solutions
 Check Coolant Level See Operator's Manual	* The coolant level is too low. **NOTE** Engine damage due to insufficient coolant ▶ Avoid long journeys with insufficient coolant. ▶ Add coolant (→ page 510). ▶ Have the engine cooling system checked at a qualified specialist workshop.
 Coolant Stop Switch Off Vehicle	* The coolant is too hot. ▶ Stop immediately in accordance with the traffic conditions and switch off the vehicle. **WARNING** Risk of burns when opening the hood If you open the hood in the event of an overheated engine or fire in the engine compartment, the following situations may occur: • You may come into contact with hot gases. • You may come into contact with other escaping hot operating fluids. ▶ Before opening the hood, allow the engine to cool down. ▶ In the event of a fire in the engine compartment, keep the hood closed and call the fire service. ▶ Wait until the engine has cooled down.

Display messages	Possible causes/consequences and ▶ Solutions
	▶ Make sure that the air supply to the radiator is not obstructed. ▶ Avoiding high loads on the engine, drive to the nearest qualified specialist workshop. In doing so, ensure that the coolant temperature display remains below the red marking.
 Fuel Reserve	* The fuel supply has dropped into the reserve range. ▶ Refuel.
 Fuel Filler Cap Open	* The fuel filler cap is not closed correctly or the fuel system is leaking. ▶ Close the fuel filler cap. ▶ **If the fuel filler cap was already properly closed:** consult a qualified specialist workshop.

Transmission

Display messages	Possible causes/consequences and ▶ Solutions
Shift to P Only When Vehicle Is Stationary	* It is possible to select the park position P only if the vehicle is stationary. ▶ Depress the brake pedal to stop. ▶ Shift the transmission to park position P when the vehicle is stationary.

Display messages	Possible causes/consequences and ▶ Solutions
Depress Brake to Shift from P	* You have attempted to shift the transmission out of park position P and into another transmission position. ▶ Depress the brake pedal. ▶ Select transmission position D, R or neutral N.
To Deselect P or N Depress Brake and Start Vehicle	* You have attempted to shift the transmission out of park position P or neutral N and into another transmission position. ▶ Depress the brake pedal. ▶ Start the vehicle. ▶ Change the transmission position.
Depress Brake to Shift to D or R	* You have attempted to select transmission position D or R. ▶ Depress the brake pedal. ▶ Select transmission position D or R.
Depress Brake to Shift to R	* You have attempted to select transmission position R. ▶ Depress the brake pedal. ▶ Select transmission position R.
Service Required Apply Parking Brake to Park	* A malfunction has occurred in the emergency power supply to park position P. ▶ Consult a qualified specialist workshop. ▶ Until then, always select park position P manually before you switch off the vehicle. ▶ Before leaving the vehicle, apply the electric parking brake.

Display messages	Possible causes/consequences and ▶ Solutions
Risk of Vehicle Rolling Away Driver's Door Open Position P Not Selected	* The driver's door is not fully closed and transmission position D, R or neutral N is selected. The vehicle may roll away. ▶ Select park position P when switching off the vehicle.
Risk of Vehicle Rolling Away Apply Parking Brake When Parking	* The transmission is malfunctioning. Park position P cannot be selected. ▶ Park the vehicle safely. ▶ Use the electric parking brake to secure the vehicle against rolling away. ▶ On gradients, turn the front wheels so that the vehicle will roll towards the curb if it starts moving.
Risk of Vehicle Rolling Away N Activated Manually No Automatic Change to P	* While the vehicle was at a standstill or driving at very low speed, neutral N was engaged with the engine running or the vehicle switched on. ! **NOTE** Damage to the vehicle due to rolling away When the vehicle is switched off or the driver's door is opened, automatic engagement of park position P is deactivated. The vehicle may roll away. ▶ Be ready to brake. ▶ Do not leave the vehicle unattended. ▶ Depress the brake pedal until the vehicle comes to a standstill. ▶ Engage park position P when the vehicle is stationary with the brake pedal depressed.

Display messages	Possible causes/consequences and ▶ Solutions
	▶ To continue driving with the brake pedal depressed, select transmission position [D] or [R].
N Automatically Activated Please Shift to Transmission Position Again	* Neutral [N] was automatically engaged when the vehicle was rolling or being driven. ⓘ When you open the driver's door in neutral [N], park position [P] will be engaged automatically. ▶ Engage park position [P] when the vehicle is stationary with the brake pedal depressed. ▶ To continue driving with the brake pedal depressed, select transmission position [D] or [R].
N is Engaged Shift to Desired Drive Range	* The accelerator pedal was depressed while the vehicle was rolling or moving in neutral [N]. ▶ To accelerate the vehicle, select transmission position [D] or [R].
Reversing Not Possible Service Required	* The transmission is malfunctioning. It is not possible to select transmission position [R]. ▶ Consult a qualified specialist workshop.
Transmission Malfunction Stop	* The transmission is malfunctioning. The transmission shifts to neutral [N] automatically. ▶ Stop the vehicle immediately in accordance with the traffic conditions. ▶ Depress the brake pedal. ▶ Engage park position [P]. ▶ Consult a qualified specialist workshop.
Service Required Do Not Change Transmission Position	* The transmission is malfunctioning. It is no longer possible to change the transmission position. ▶ If transmission position [D] is selected, consult a qualified specialist workshop and do not change the transmission position.

Display messages	Possible causes/consequences and ▶ Solutions
	▶ For all other transmission positions, park the vehicle safely. ▶ Consult a qualified specialist workshop or breakdown service.
Auxiliary Battery Malfunction (white display message)	* There is a malfunction in the auxiliary battery. ▶ Consult a qualified specialist workshop. ▶ Until then, always select park position P manually before you switch off the vehicle. ▶ Before leaving the vehicle, apply the electric parking brake.
Auxiliary Battery Malfunction (red display message)	* There is a malfunction in the auxiliary battery. ▶ Consult a qualified specialist workshop. ▶ Until then, always select park position P manually before you switch off the vehicle. ▶ Before leaving the vehicle, apply the electric parking brake.

Brakes

Display messages	Possible causes/consequences and ▶ Solutions
PARK (USA only)  (Canada only) Parking Brake See Operator's Manual	* The yellow (P) indicator lamp is lit. The electric parking brake is malfunctioning. **To apply:** ▶ Switch the vehicle off and switch it back on. ▶ Apply the electric parking brake manually (→ page 269). If it is not possible to apply the electric parking brake: ▶ Consult a qualified specialist workshop. ▶ Where necessary, also secure the parked vehicle against rolling away. * The yellow (P) indicator lamp and the red PARK (USA only) or (P) (Canada only) indicator lamp are lit. The electric parking brake is malfunctioning. **To release:** ▶ Switch the vehicle off and switch it back on. ▶ Release the electric parking brake manually (→ page 269). or ▶ Release the electric parking brake automatically (→ page 269). If it is still not possible to release the electric parking brake: ▶ Do not continue driving. Consult a qualified specialist workshop.

Display messages	Possible causes/consequences and ▶ Solutions
	* The yellow Ⓟ indicator lamp is lit and the red PARK (USA only) or Ⓟ (Canada only) indicator lamp is flashing. The electric parking brake is malfunctioning. The electric parking brake could not be applied or released. ▶ Switch the vehicle off and switch it back on. **To apply:** ▶ Release and then apply the electric parking brake manually (→ page 269). **To release:** ▶ Apply and then release the electric parking brake manually. If the electric parking brake cannot be applied or the red PARK (USA only) or Ⓟ (Canada only) indicator lamp continues to flash: ▶ Do not continue driving. Consult a qualified specialist workshop. ▶ Where necessary, also secure the parked vehicle against rolling away. * The yellow Ⓟ indicator lamp is lit and the red PARK (USA only) or Ⓟ (Canada only) indicator lamp flashes for approximately ten seconds after the electric parking brake has been applied or released. It then remains lit or goes out. The electric parking brake is malfunctioning. **If the state of charge is too low:** ▶ Charge the 12 V battery.

Display messages	Possible causes/consequences and ▶ Solutions
	To apply: ▶ Apply the electric parking brake manually. If it is not possible to apply the electric parking brake: ▶ Consult a qualified specialist workshop. ▶ Where necessary, also secure the parked vehicle against rolling away. **To release:** ▶ If the conditions for automatic release are fulfilled and the electric parking brake is not released automatically, release the electric parking brake manually (→ page 269). If it is still not possible to release the electric parking brake: ▶ Do not continue driving. Consult a qualified specialist workshop.

Display messages	Possible causes/consequences and ▶ Solutions
PARK (USA only)  (Canada only) Release Parking Brake	* The red PARK indicator lamp (USA only) or (P) indicator lamp (Canada only) is flashing. The electric parking brake is applied while you are driving: • A condition for automatic release of the electric parking brake has not been fulfilled (→ page 269). • You are performing emergency braking using the electric parking brake (→ page 270). ▶ Check the conditions for automatic release of the electric parking brake. ▶ Release the electric parking brake manually.
PARK (USA only)  (Canada only) Switch on Vehicle to Release the Parking Brake	* The red PARK (USA only) or (P) (Canada only) indicator lamp is lit. You have attempted to release the electric parking brake with the vehicle switched off. ▶ Switch on the vehicle.

Display messages	Possible causes/consequences and ▶ Solutions
 (USA only)  (Canada only) Brake Immediately	* A malfunction has occurred while the HOLD function was activated. A horn may also sound at regular intervals. You cannot start the vehicle system. ▶ Immediately depress the brake pedal firmly until the display message disappears. You cannot start the vehicle system again.
 (USA only)  (Canada only) Check Brake Fluid Level	* There is insufficient brake fluid in the brake fluid reservoir. **⚠ WARNING** Risk of an accident due to low brake fluid level If the brake fluid level is too low, the braking effect and the braking characteristics may be impaired. ▶ Pull over and stop the vehicle safely as soon as possible, paying attention to road and traffic conditions. Do not continue driving under any circumstances. ▶ Consult a qualified specialist workshop. ▶ Do not add brake fluid. ▶ Stop the vehicle immediately in accordance with the traffic conditions. Do not continue driving.

Display messages	Possible causes/consequences and ▶ Solutions
	▶ Do not add brake fluid. ▶ Consult a qualified specialist workshop.
Check Brake Pads See Operator's Manual	* The brakepads have reached the wear limit. ▶ Consult a qualified specialist workshop.

Driving and driving safety systems

Display messages	Possible causes/consequences and ▶ Solutions
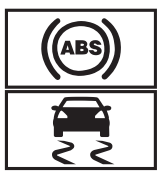 Currently Unavailable See Operator's Manual (ABS and ESP®)	* ABS and ESP® are temporarily unavailable. Other driving systems and driving safety systems (e.g. BAS) may also be temporarily unavailable. The brake system will continue to operate normally. Braking distance may increase in an emergency braking situation. ⚠ **WARNING** Risk of skidding if ABS and ESP® are malfunctioning The wheels may lock during braking and ESP® does not perform any vehicle stabilization. The steerability and braking characteristics are heavily impaired and the braking distance may increase. In addition, other driving safety systems are switched off. ▶ Drive carefully on a suitable stretch of road, making slight steering movements at a speed above 19 mph (30 km/h).

Display messages	Possible causes/consequences and ▶ Solutions
	▶ If the display message does not disappear, consult a qualified specialist workshop immediately. Drive carefully. ▶ Drive carefully on a suitable stretch of road, making slight steering movements at a speed above 19 mph (30 km/h). ▶ If the display message does not disappear, consult a qualified specialist workshop immediately. Drive carefully.
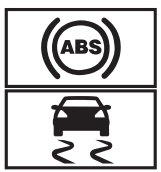 Inoperative See Operator's Manual (ABS and ESP®)	* ABS and ESP® are malfunctioning. Other driving systems and driving safety systems (e.g. BAS) may also be malfunctioning. The brake system will continue to operate normally. Braking distance may increase in an emergency braking situation. ⚠ **WARNING** Risk of skidding if ABS and ESP® are malfunctioning The wheels may block during braking and ESP® does not perform any vehicle stabilization. The steerability and braking characteristics are heavily impaired and the braking distance may increase. In addition, other driving safety systems are switched off. ▶ Drive on carefully. ▶ Have ABS and ESP® checked immediately at a qualified specialist workshop. ▶ Drive on carefully. ▶ Consult a qualified specialist workshop immediately.

Display messages	Possible causes/consequences and ▶ Solutions
 Currently Unavailable See Operator's Manual (ESP®)	* ESP® is temporarily unavailable. Other driving systems and driving safety systems (e.g. BAS) may also be malfunctioning. **⚠ WARNING** Risk of skidding if ESP is malfunctioning® If ESP® is malfunctioning, ESP® cannot carry out vehicle stabilization. In addition, other driving safety systems are switched off. ▶ Drive carefully on a suitable stretch of road, making slight steering movements at a speed above 19 mph (30 km/h). ▶ If the display message does not disappear, consult a qualified specialist workshop immediately. Drive carefully. ▶ Drive carefully on a suitable stretch of road, making slight steering movements at a speed above 19 mph (30 km/h). ▶ If the display message does not disappear, consult a qualified specialist workshop immediately. Drive carefully.
 Inoperative See Operator's Manual (ESP®)	* ESP® is malfunctioning. Other driving systems and driving safety systems (e.g. BAS) may also be malfunctioning. The brake system will continue to operate normally. Braking distance may increase in an emergency braking situation.

Display messages	Possible causes/consequences and ▶ Solutions
	⚠ WARNING Risk of skidding if ESP® is malfunctioning If ESP® is malfunctioning, ESP® cannot carry out vehicle stabilization. In addition, other driving safety systems are switched off. ▶ Drive on carefully. ▶ Have ESP® checked at a qualified specialist workshop. ▶ Drive on carefully. ▶ Consult a qualified specialist workshop immediately.
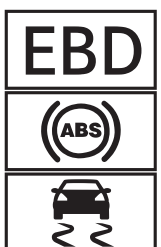 Inoperative See Operator's Manual (EBD, ABS and ESP®)	* EBD, ABS and ESP® are malfunctioning. Other driving systems and driving safety systems (e.g. BAS) may also be malfunctioning. **⚠ WARNING** Risk of skidding if EBD, ABS and ESP® are malfunctioning The wheels may block during braking and ESP® does not perform any vehicle stabilization. The steerability and braking characteristics are heavily impaired and the braking distance may increase. In addition, other driving safety systems are switched off. ▶ Drive on carefully. ▶ Have the brake system checked immediately at a qualified specialist workshop. ▶ Drive on carefully.

Display messages	Possible causes/consequences and ▶ Solutions
	▶ Consult a qualified specialist workshop immediately.
 Off	* The HOLD function is deactivated because the vehicle is slipping or a condition for activation is not fulfilled. ▶ Reactivate the HOLD function later or check the activation conditions for the HOLD function (→ page 277).
Restricted Mode Activated Drive Power Reduced	* The valet service mode is activated. Vehicle acceleration is restricted (→ page 278). * The beginner driver mode is activated. Vehicle acceleration is restricted (→ page 279).
 ATTENTION ASSIST: Take a Break!	* ATTENTION ASSIST has detected fatigue or an increasing lack of concentration on the part of the driver (→ page 280). ▶ If necessary, take a break.
 ATTENTION ASSIST Nodding Off Take a Break!	* ATTENTION ASSIST has detected indicators of microsleep (→ page 280). A warning tone will also sound. ▶ Take a break immediately. ▶ Press the left-hand Touch Control and acknowledge the display message.

Display messages	Possible causes/consequences and ▶ Solutions
ATTENTION ASSIST Stay Alert! (white display message)	* ATTENTION ASSIST has detected that the driver is taking their eyes off the traffic situation (→ page 280). A warning tone will also sound. ▶ Direct your attention back to the traffic situation.
ATTENTION ASSIST Stay Alert! (yellow display message)	* ATTENTION ASSIST has detected that the driver is not looking at the traffic situation after the warning has been issued (→ page 280). A continuous warning tone will also sound. ▶ Direct your attention back to the traffic situation immediately. ▶ Press the left-hand Touch Control and acknowledge the display message. If the driver still does not react to the warning, an emergency stop can be initiated by the system (→ page 295).
 - - - mph	* Cruise control cannot be activated as not all activation conditions are fulfilled. ▶ Observe the activation conditions for cruise control (→ page 283).
Cruise Control Inoperative	* Cruise control is malfunctioning. ▶ Consult a qualified specialist workshop.
Cruise Control Off	* Cruise control has been deactivated. If there is an additional warning tone, cruise control has been deactivated automatically (→ page 282).

Display messages	Possible causes/consequences and ▶ Solutions
Traffic Sign Assist Currently Unavailable See Operator's Manual	* Traffic Sign Assist is temporarily unavailable. Once the cause of the problem is no longer present, the system will be available again. ▶ Continue driving in compliance with traffic regulations.
Traffic Sign Assist Inoperative	* Traffic Sign Assist is malfunctioning. ▶ Continue driving in compliance with traffic regulations. or ▶ Stop the vehicle in accordance with the traffic conditions and restart the vehicle. ▶ If the display message does not disappear: consult a qualified specialist workshop.
 Malfunction Do Not Exceed 50 mph	* AIRMATIC is functioning only to a limited extent. The vehicle's handling characteristics may be affected. ! **NOTE** The tires on the front axle or the fenders could be damaged by large steering movements ▶ Avoid large steering movements while driving and listen for scraping sounds. ▶ If you hear scraping sounds, pull over and stop the vehicle in accordance with the traffic conditions, and set a higher vehicle level if possible. ▶ Drive in a manner appropriate for the current level, but do not exceed 50 mph (80 km/h). ▶ Consult a qualified specialist workshop.

Display messages	Possible causes/consequences and ▶ Solutions
 STOP Vehicle Level Too Low	* You have pulled away despite the vehicle level being too low. ▶ Stop the vehicle in accordance with the traffic conditions. The vehicle will be raised to the selected vehicle level. ▶ Wait until the display message disappears before pulling away. If the display message does not disappear and a warning tone also sounds, AIRMATIC is malfunctioning: ▶ Do not drive faster than 50 mph (80 km/h) and consult a qualified specialist workshop immediately. ! NOTE The tires on the front axle or the fenders could be damaged by large steering movements ▶ Avoid large steering movements while driving and listen for scraping sounds. ▶ If you hear scraping sounds, pull over and stop the vehicle in accordance with the traffic conditions, and set a higher vehicle level if possible. ▶ Set a higher vehicle level (→ page 318). Depending on the malfunction, the vehicle will be raised.
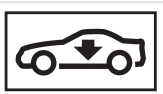 Lowering	* The vehicle level will lower for the following reasons: • You have selected a different drive program. • You have exceeded the speed limit. • You have changed the vehicle level by pressing the button.

Display messages	Possible causes/consequences and ▶ Solutions
 Rising	* Your vehicle is adjusting to the level you have selected.
 Vehicle Rising Please Wait	* The vehicle level is too low. The vehicle will be raised to the selected vehicle level. ▶ Wait until the display message disappears before pulling away.
 Do Not Exceed 12mph	* AIRMATIC is functioning only to a limited extent. The current level is too high. The vehicle's handling characteristics may be affected. ▶ Do not exceed 12 mph (20 km/h). ▶ Consult a qualified specialist workshop.
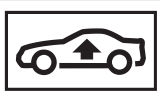 Slow Down	* You are driving too fast for the selected vehicle level. ▶ Drive more slowly and then select the desired vehicle level again.

Display messages	Possible causes/consequences and ▶ Solutions
 Compressor Is Cooling	* Due to frequent level changes within a short space of time, the compressor first needs to cool down in order to set the selected vehicle level. ▶ Drive on in a manner appropriate for the current level. Make sure that there is sufficient ground clearance. When the compressor has cooled down, the vehicle will continue rising to the selected vehicle level.

Driver assistance systems

Display messages	Possible causes/consequences and ▶ Solutions
 - - - mph	* Active Distance Assist DISTRONIC cannot be activated as not all activation conditions are fulfilled. ▶ Comply with the activation conditions of Active Distance Assist DISTRONIC (→ page 287).
 Suspended	* If you depress the accelerator pedal beyond the setting of Active Distance Assist DISTRONIC, the system will switch to passive mode (→ page 284).

Display messages	Possible causes/consequences and ▶ Solutions
 Off	* Active Distance Assist DISTRONIC was deactivated. If a warning tone also sounds, Active Distance Assist DISTRONIC has deactivated automatically (⟶ page 287).
Active Distance Assist Currently Unavailable See Operator's Manual	* Active Distance Assist DISTRONIC is temporarily unavailable. The ambient conditions are outside the system limits (⟶ page 284). As soon as the ambient conditions are within the system limits, the system will become available again. ▶ Drive on carefully. or ▶ If the display message does not disappear, stop the vehicle in accordance with the traffic conditions and restart the vehicle.
Active Distance Assist Inoperative	* Active Distance Assist DISTRONIC is malfunctioning. Other driving systems and driving safety systems may also be malfunctioning. ▶ Drive on carefully. or ▶ Stop the vehicle in accordance with the traffic conditions and restart the vehicle. ▶ If the display message does not disappear: consult a qualified specialist workshop.

Display messages	Possible causes/consequences and ▶ Solutions
Active Distance Assist Now Available	* Active Distance Assist DISTRONIC is operational again. ▶ Switch on Active Distance Assist DISTRONIC (→ page 287).
Active Brake Assist Functions Currently Limited See Operator's Manual	* For vehicles with the Driving Assistance Package, the following functions may be temporarily unavailable or only partially available: • Active Brake Assist with cross-traffic function • Evasive Steering Assist • PRE-SAFE® PLUS **Vehicles with Blind Spot Assist:** PRE-SAFE® PLUS is temporarily unavailable. ▶ Drive on carefully. As soon as the ambient conditions are within the system limits, the system will become available again. or ▶ If the display message does not disappear, stop the vehicle in accordance with the traffic conditions and restart the vehicle.
Active Brake Assist Functions Limited See Operator's Manual	* For vehicles with the Driving Assistance Package, the following functions may be temporarily unavailable or only partially available: • Active Brake Assist with cross-traffic function • Evasive Steering Assist • PRE-SAFE® PLUS

Display messages	Possible causes/consequences and ▶ Solutions
	▶ Drive on carefully. or ▶ Stop the vehicle in accordance with the traffic conditions and restart the vehicle. ▶ If the display message does not disappear: consult a qualified specialist workshop.
Active Steering Assist Currently Unavailable See Operator's Manual	* Active Steering Assist is temporarily unavailable. The ambient conditions are outside the system limits (→ page 293). As soon as the ambient conditions are within the system limits, the system will become available again. ▶ Drive on ▶ Check the tire pressure if necessary.
Active Steering Assist Inoperative	* Active Steering Assist is malfunctioning. Active Distance Assist DISTRONIC remains available. ▶ Drive on or ▶ Stop the vehicle in accordance with the traffic conditions and restart the vehicle. ▶ If the display message does not disappear: consult a qualified specialist workshop.
	* Active Steering Assist has reached the system limits (→ page 293). You have not steered independently for a considerable period of time. ▶ Take over the steering and drive on in accordance with the traffic conditions.

Display messages	Possible causes/consequences and ▶ Solutions
Active Steering Assist Currently Unavailable Due to Multiple Emergency Stops	* Active Steering Assist is temporarily unavailable due to several emergency stops having been performed. ▶ Take over the steering and stop in accordance with the traffic conditions. ▶ Switch the vehicle off and switch it back on Active Steering Assist is available once more.
 Initiating Emergency Stop	* Your hands are not on the steering wheel. Active Steering Assist will initiate an emergency stop (→ page 293). ▶ Put your hands on the steering wheel. Information on canceling an emergency stop (→ page 295).
Active Emergency Stop Assist Currently Unavailable See Operator's Manual	* Active Emergency Stop Assist is temporarily unavailable. The ambient conditions are outside the system limits (→ page 295). As soon as the ambient conditions are within the system limits, the system will become available again. ▶ Drive on or ▶ If the display message does not disappear, stop the vehicle in accordance with the traffic conditions and restart the vehicle. * **Vehicles without the Driving Assistance Package:** Active Emergency Stop Assist is temporarily unavailable due to multiple emergency stops. ▶ Take over the steering and stop in accordance with the traffic conditions.

Display messages	Possible causes/consequences and ▶ Solutions
	▶ Switch the vehicle off and switch it back on. Active Emergency Stop Assist is available once more.
Active Emergency Stop Assist Inoperative	* Active Emergency Stop Assist is malfunctioning. ▶ Drive on or ▶ Stop the vehicle in accordance with the traffic conditions and restart the vehicle. ▶ If the display message does not disappear: consult a qualified specialist workshop.
Active Lane Change Assist Currently Unavailable See Operator's Manual	* Active Lane Change Assist is temporarily unavailable. The ambient conditions are outside the system limits (→ page 296). As soon as the ambient conditions are within the system limits, the system will become available again. ▶ Drive on. or ▶ If the display message does not disappear, stop the vehicle in accordance with the traffic conditions and restart the vehicle.
Active Lane Change Assist Inoperative	* Active Lane Change Assist is malfunctioning. ▶ Drive on. or ▶ Stop the vehicle in accordance with the traffic conditions and restart the vehicle. ▶ If the display message does not disappear: consult a qualified specialist workshop.

Display messages	Possible causes/consequences and ▶ Solutions
Automatic Lane Change Currently Unavailable See Operator's Manual	* Active Lane Change Assist is temporarily unavailable. The ambient conditions are outside the system limits (→ page 296). As soon as the ambient conditions are within the system limits, the system will become available again. ▶ Drive on or ▶ If the display message does not disappear, stop the vehicle in accordance with the traffic conditions and restart the vehicle.
Automatic Lane Change Inoperative	* Active Lane Change Assist is malfunctioning. ▶ Drive on or ▶ Stop the vehicle in accordance with the traffic conditions and restart the vehicle. ▶ If the display message does not disappear: consult a qualified specialist workshop.
Active Stop & Go Assist Currently Unavailable See Operator's Manual	* Active Stop-and-Go Assist is temporarily unavailable. Active Distance Assist DISTRONIC and Active Steering Assist are still available. The ambient conditions are outside the system limits (→ page 284). As soon as the ambient conditions are within the system limits, the system will become available again. ▶ Drive on.

Display messages	Possible causes/consequences and ▶ Solutions
Active Stop & Go Assist Inoperative See Operator's Manual	* Active Stop-and-Go Assist is malfunctioning. Active Stop-and-Go Assist has been deactivated. Active Distance Assist DISTRONIC and Active Steering Assist are still available. ▶ Drive on. or ▶ Stop the vehicle in accordance with the traffic conditions and restart the vehicle. ▶ If the display message does not disappear: consult a qualified specialist workshop.
Blind Spot Assist Currently Unavailable See Operator's Manual	* Blind Spot Assist is temporarily unavailable. The system limits have been reached (→ page 311). Once the cause of the problem is no longer present, the system will be available again. ▶ Drive on. or ▶ If the display message does not disappear, stop the vehicle in accordance with the traffic conditions and restart the vehicle.
Blind Spot Assist Inoperative	* Blind Spot Assist or the exit warning is malfunctioning. ▶ Drive on. or ▶ Stop the vehicle in accordance with the traffic conditions and restart the vehicle. ▶ If the display message does not disappear: consult a qualified specialist workshop.

Display messages	Possible causes/consequences and ▶ Solutions
Active Blind Spot Assist Currently Unavailable See Operator's Manual	* Active Blind Spot Assist is temporarily unavailable. The system limits have been reached (→ page 311). Once the cause of the problem is no longer present, the system will be available again. ▶ Drive on. or ▶ If the display message does not disappear, stop the vehicle in accordance with the traffic conditions and restart the vehicle.
Active Blind Spot Assist Inoperative	* Active Blind Spot Assist or the exit warning is malfunctioning. ▶ Drive on. or ▶ Stop the vehicle in accordance with the traffic conditions and restart the vehicle. ▶ If the display message does not disappear: consult a qualified specialist workshop.
Active Lane Keeping Assist Currently Unavailable See Operator's Manual	* Active Lane Keeping Assist is temporarily unavailable. The ambient conditions are outside the system limits (→ page 314). As soon as the ambient conditions are within the system limits, the system will become available again. ▶ Drive on.
Active Lane Keeping Assist Inoperative	* Active Lane Keeping Assist is malfunctioning. ▶ Drive on

Display messages	Possible causes/consequences and ▶ Solutions
	or ▶ Stop the vehicle in accordance with the traffic conditions and restart the vehicle. ▶ If the display message does not disappear: consult a qualified specialist workshop.
Active Lane Keeping Assist Limited Range of Functions See Operator's Manual	* Active Lane Keeping Assist is available but restricted. ▶ Drive on or ▶ Stop the vehicle in accordance with the traffic conditions and restart the vehicle. ▶ If the display message does not disappear: consult a qualified specialist workshop.
 Initiating Emergency Stop	* Your hands are not on the steering wheel. The Active Lane Keeping Assist will initiate an emergency stop (→ page 314). ▶ Put your hands on the steering wheel. Information on canceling an emergency stop (→ page 295).

Display messages	Possible causes/consequences and ▶ Solutions
 Temporarily Unavailable Sensors Dirty	* Front and corner radar sensors (hereafter "sensors") are malfunctioning. Possible causes are: • The sensors are dirty • Heavy rain or snow • Extended country driving without other traffic, e.g. in the desert Driving systems and driving safety systems may be malfunctioning or temporarily unavailable. The brake system, steering and drive system will continue to function normally. ▶ Drive on carefully. Once the causes of the problem are no longer present, the driving systems and driving safety systems will be available again and the corresponding symbols will be switched off. If the display message does not disappear: ▶ Stop the vehicle in accordance with the traffic conditions. ▶ Clean all sensor covers from outside (→ page 272). ▶ Restart the vehicle.

Display messages	Possible causes/consequences and ▶ Solutions
 Camera View Reduced See Operator's Manual	* The view of the multifunction camera is restricted. Possible causes are: • Dirt on the windshield in the field of vision of the multifunction camera • Heavy rain, snow or fog • Fogging up of the windshield from inside or outside: in certain weather conditions, fog can form on the inside or outside of the windshield during cold times of year in particular. ⓘ This fog on the windshield will be removed automatically within a short time with the aid of a heater. The restriction is temporary. Driving systems and driving safety systems may be malfunctioning or temporarily unavailable. The brake system, steering and drive system will continue to function normally. ▶ Drive on carefully. ▶ In order to remove the fog from the outside, carry out a single wipe of the windshield (→ page 213). ▶ In order to remove the fog from the inside, press MAX (→ page 226). Once the causes of the problem are no longer present, the driving systems and driving safety systems will be available again and the corresponding symbols will be switched off. If the display message does not disappear after a longer drive of around 15 minutes: ▶ Stop the vehicle in accordance with the traffic conditions. ▶ Clean the windshield, especially in the position of the multifunction camera (→ page 272). ▶ Restart the vehicle.

Display messages	Possible causes/consequences and ▶ Solutions
The camera view of the driver is currently obstructed Affected functions: See operator's manual	* The view of the driver camera is reduced. Possible causes are: • Objects or stickers are projecting into the driver camera's field of vision. • The driver camera is dirty. ▶ Keep the driver camera's field of vision free. ▶ Clean the driver camera if necessary. Please comply with the notes on caring for the interior relating to the display (→ page 517).
Change the steering wheel/ seat position until 6 dots are visible on the upper edge of the screen.	* The driver camera cannot capture your line of sight. ▶ Change the steering wheel and seat position until six dots are visible on the top edge of the screen. The display message will appear again if the driver camera is again unable to detect your line of sight after 30 minutes. The display message will no longer appear if you confirm the display message and the driver camera cannot detect your line of sight during the entire journey.
Driver Camera Inoperative See Operator's Manual	* The driver camera is malfunctioning. ▶ Consult a qualified specialist workshop.
PRE-SAFE Inoperative See Operator's Manual	* The PRE-SAFE® functions are malfunctioning. ▶ Consult a qualified specialist workshop.

Display messages	Possible causes/consequences and ▶ Solutions
PRE-SAFE Pulse Side Inoperative See Operator's Manual	* The PRE-SAFE® Impulse Side system is malfunctioning or inoperative after having already been triggered. ▶ Consult a qualified specialist workshop.
PRE-SAFE PLUS Inoperative See Operator's Manual	* There is a malfunction in the PRE-SAFE® PLUS system. ▶ Drive on or ▶ Stop the vehicle in accordance with the traffic conditions and restart the vehicle. ▶ If the display message does not disappear: consult a qualified specialist workshop.

Parking assistance systems

Display messages	Possible causes/consequences and ▶ Solutions
PARKTRONIC Inoperative See Operator's Manual	* Parking Assist PARKTRONIC is malfunctioning. Once the cause of the problem is no longer present, the system will be available again. ▶ Continue driving while paying attention to the vehicle's surroundings. or ▶ Stop the vehicle in accordance with the traffic conditions and restart the vehicle. ▶ If the display message still appears, consult a qualified specialist workshop.

Display messages	Possible causes/consequences and ▶ Solutions
Active Parking Assist and PARKTRONIC Inoperative See Operator's Manual	* Active Parking Assist and Parking Assist PARKTRONIC are malfunctioning. Once the cause of the problem is no longer present, the system will be available again. ▶ Continue driving while paying attention to the vehicle's surroundings. or ▶ Stop the vehicle in accordance with the traffic conditions and restart the vehicle. ▶ If the display message still appears, consult a qualified specialist workshop.
Active Parking Assist Limited Availability of Maneuvering Assistance See Operator's Manual	* Active Parking Assist's maneuvering assistant is temporarily unavailable or only partially available. ▶ Clean all sensors of the parking and camera system (→ page 516). ▶ If the display message still appears, consult a qualified specialist workshop.

Mercedes-Benz emergency call system

Display messages	Possible causes/consequences and ▶ Solutions
SOS Inoperative	* The Mercedes-Benz emergency call system is malfunctioning. The Mercedes me connect system is also malfunctioning. ▶ Consult a qualified specialist workshop.

Battery

Display messages	Possible causes/consequences and ▶ Solutions
 12 V On-board Electrical System Service Required	* The 12 V on-board electrical system is malfunctioning. ▶ Consult a qualified specialist workshop immediately.
 Stop Vehicle See Operator's Manual	* The 12 V battery is no longer being charged and the condition of charge is too low. **NOTE** Possible engine damage if you continue driving ▶ Do not continue driving under any circumstances. ▶ Consult a qualified specialist workshop. ▶ Stop the vehicle immediately in accordance with the traffic conditions. Do not continue driving under any circumstances. ▶ Switch off the vehicle. ▶ Consult a qualified specialist workshop.

Display messages	Possible causes/consequences and ▶ Solutions
 Switch on vehicle to charge the 12 V battery	* The vehicle is off and the condition of charge of the 12 V battery is too low. ▶ Switch off electrical consumers that are not required. ▶ Drive for 30–60 mins. or ▶ Charge the 12 V battery when stationary (→ page 49).
 Stop Vehicle To Charge the 12 V Battery Do Not Switch Off Vehicle	* The state of charge of the 12 V battery is too low. ▶ Stop the vehicle immediately in accordance with the traffic conditions. Do not continue driving. ▶ Leave the vehicle running ▶ If the display message disappears: drive on. ▶ If the display message does not disappear: consult a qualified specialist workshop.
 Stop Vehicle See Operator's Manual	* The 48 V on-board electrical system is malfunctioning. ▶ Stop the vehicle immediately in accordance with the traffic conditions. Do not continue driving under any circumstances. ▶ Switch off the vehicle. ▶ Consult a qualified specialist workshop.

Display messages	Possible causes/consequences and ▶ Solutions
 Battery Overheated Stop! Everyone Get Out! Outdoors if Possible	* The 48 V battery is overheating. There is a risk of fire. ▶ Stop the vehicle immediately in accordance with the traffic conditions. ▶ If possible, stop the vehicle in the open air and ensure that all vehicle occupants get out. ⓘ Supporting vehicle functions may activate automatically, e.g. air-recirculation mode as part of climate control. ▶ Do not continue driving. ▶ If smoke is present, leave the danger zone and call the fire service immediately. ▶ Consult a qualified specialist workshop even if there are no external signs of a fire.
 48 V Battery See Operator's Manual	* The 48 V on-board electrical system has function restrictions. Comfort functions, such as the climate control system, may be restricted. It is possible to continue driving. ▶ If the display message remains active continuously, consult a qualified specialist workshop immediately.
 Please Wait Charging 48 V Battery...	* The 48 V battery is discharged. You have switched on the vehicle while the 12 V battery was being charged with a suitable charger or while another vehicle was providing starting assistance. The discharged 48 V battery is charged automatically via the voltage converter. After a few minutes, the Starting Possible Again display message will be shown on the driver's display. ▶ Start the vehicle.

Display messages	Possible causes/consequences and ▶ Solutions
	▶ Drive the vehicle for a while to charge the 12 V battery and the 48 V battery after disconnecting the charger from the vehicle. If the Starting Possible Again display message does not appear after a few minutes: ▶ Try to start the vehicle. ▶ If the vehicle does not start, consult a qualified specialist workshop.
Starting Possible Again	* The 48 V battery has been charged automatically via the voltage converter. ▶ Start the vehicle and drive for a while to charge the 12 V battery and the 48 V battery.

Tire pressure monitor

Display messages	Possible causes/consequences and ▶ Solutions
Tire Pressure Monitor Currently Unavailable	* There is interference from a powerful radio signal source. As a result, no signals from the tire pressure sensor are being received. The tire pressure monitoring system is temporarily unavailable. The tire pressure monitoring system will restart automatically as soon as the cause has been rectified. ▶ Drive on.
Tire Pressure Monitor Inoperative	* The tire pressure monitoring system is malfunctioning.

Display messages	Possible causes/consequences and ▶ Solutions
	⚠ **WARNING** There is a risk of an accident if the tire pressure monitoring system is malfunctioning The tire pressure monitoring system cannot issue a warning if there is pressure loss in one or more of the tires. Tires with insufficient tire pressure may impair the driving characteristics as well as steering and braking. ▶ Have the tire pressure monitoring system checked at a qualified specialist workshop. ▶ Consult a qualified specialist workshop.
Tire Pressure Monitor Inoperative Tire Pressure Sensors Missing	* The wheels installed do not have suitable tire pressure sensors. The tire pressure monitoring system is deactivated. ▶ Install wheels with suitable tire pressure sensors.
 Wheel Sensor(s) Missing	* There is no signal from the tire pressure sensor in at least one wheel. No pressure value is displayed for the affected tire. ▶ Have the faulty tire pressure sensor replaced at a qualified specialist workshop.
 Check Tires	* The tire pressure in one or more tires has dropped significantly. The wheel position is displayed. A warning tone will also sound. ⚠ **WARNING** Risk of an accident due to insufficient tire pressure • The tires can burst.

Display messages	Possible causes/consequences and ▶ Solutions
	• The tires can wear excessively and/or unevenly. • The driving characteristics as well as the steering and braking may be greatly impaired. You could then lose control of the vehicle. ▶ Observe the recommended tire pressures. ▶ Adjust the tire pressure if necessary. ▶ Stop the vehicle in accordance with the traffic conditions. ▶ Check the tire pressure (→ page 547) and the tires.
 Please Correct Tire Pressure	* The tire pressure is too low in at least one of the tires, or the difference in tire pressure between the individual wheels is too great. ▶ Check the tire pressure and add air, if necessary. ▶ When the tire pressure is correct, restart the tire pressure monitor (→ page 551).
 Warning Tire Malfunction	* The pressure in one or more tires has dropped suddenly. The wheel position is displayed. ⚠ **WARNING** Risk of an accident from driving with a flat tire • The tires can overheat and be damaged. • The driving characteristics as well as the steering and braking characteristics may be greatly impaired.

Display messages	Possible causes/consequences and ▶ Solutions
	You could then lose control of the vehicle. ▶ Do not drive with a flat tire. ▶ Do not exceed the maximum permissible driving distance in emergency mode and the maximum permissible speed with a flat MOExtended tire. ▶ Observe the notes on flat tires. Notes on flat tires (→ page 51). ▶ Stop the vehicle in accordance with the traffic conditions. ▶ Check the tires.
 Tires Overheated	* At least one tire is overheating. The affected tires are displayed in red. At temperatures close to the limit value, the tires are displayed in yellow. ⚠ **WARNING** Risk of an accident from driving with overheated tires Overheated tires can burst. ▶ Reduce speed so that the tires cool down. ▶ Reduce your speed so that the tires cool down.

Display messages	Possible causes/consequences and ▶ Solutions
 Reduce Speed	* At least one tire is overheating. The affected tires are displayed in red. At temperatures close to the limit value, the tires are displayed in yellow. **⚠ WARNING** Risk of an accident from driving with overheated tires Overheated tires can burst. ▶ Reduce speed so that the tires cool down. ▶ Reduce your speed so that the tires cool down.

Tire pressure loss warning system

Display messages	Possible causes/consequences and ▶ Solutions
Check Tire and Tire Pressure	* Canada only: The tire pressure loss warning system has detected a significant loss of pressure. **⚠ WARNING** Risk of an accident due to insufficient tire pressure • The tires can burst. • The tires can wear excessively and/or unevenly. • The driving characteristics as well as the steering and braking may be greatly impaired.

Display messages	Possible causes/consequences and ▶ Solutions
	You could then lose control of the vehicle. ▶ Observe the recommended tire pressures. ▶ Adjust the tire pressure if necessary. ▶ Stop the vehicle in accordance with the traffic conditions. ▶ Check the tire pressure (→ page 547) and the tires. ▶ When the tire pressure is correct, restart the tire pressure loss warning system (→ page 552).
Check Tire Pressure Then Restart Run Flat Indicator	* Canada only: The tire pressure loss warning system generated a display message and has not been restarted since. ▶ When the tire pressure is correct, restart the tire pressure loss warning system (→ page 552).
Run Flat Indicator Inoperative	* Canada only: The tire pressure loss warning system is malfunctioning. ▶ Consult a qualified specialist workshop.

Engine oil

Display messages	Possible causes/consequences and ▶ Solutions
 Check Engine Oil Level At Next Refueling (Add 1 Quart)	* The engine oil level has dropped to the minimum level. **!** **NOTE** Engine damage caused by driving with insufficient engine oil ▶ Avoid long journeys with insufficient engine oil. ▶ When next refueling, add 1.1 US qt (1 l) of engine oil (→ page 508). Notes on engine oil (→ page 694).
 Engine Oil Level Reduce Oil Level	* The engine oil level is too high. **!** **NOTE** Engine damage caused by driving with excess engine oil ▶ Avoid long journeys with excess engine oil. ▶ Consult a qualified specialist workshop immediately and have the engine oil level reduced.
 Engine Oil Level Stop Switch Off Vehicle	* The engine oil level is too low. **!** **NOTE** Engine damage caused by driving with insufficient engine oil ▶ Avoid long journeys with insufficient engine oil. ▶ Stop the vehicle immediately in accordance with the traffic conditions. Do not continue driving.

Display messages	Possible causes/consequences and ▶ Solutions
	▶ Switch off the vehicle. ▶ Add 1.1 US qt (1 l) of engine oil (→ page 508). ▶ Check the engine oil level. Notes on engine oil (→ page 694).
 Engine Oil Pressure Stop Switch Off Vehicle	* The oil pressure is too low. **NOTE** Engine damage caused by driving with insufficient oil pressure ▶ Avoid driving with insufficient oil pressure. ▶ Stop the vehicle immediately in accordance with the traffic conditions. Do not continue driving. ▶ Switch off the vehicle. ▶ Consult a qualified specialist workshop.
 Engine Oil Level Cannot Be Measured	* The electrical connection to the oil level sensor has been interrupted or the oil level sensor is faulty. ▶ Consult a qualified specialist workshop.

Warning and indicator lamps

Overview of indicator and warning lamps

Some systems will perform a self-test when the vehicle is switched on. Some indicator and warning lamps may briefly light up or flash. This behavior is non-critical. These indicator and warning lamps indicate a malfunction only if they light up or flash after the vehicle has been started or during a journey.

Driver display



Driver display with driver camera



Indicator and warning lamps

Occupant safety

- Restraint system (→ page 780)
- Seat belt (→ page 780)
- Occupant presence reminder (white) (→ page 780)
- Occupant presence reminder (yellow) (→ page 780)

Drive system

- Reduced power (→ page 782)

Vehicle

- Power steering (yellow) (→ page 782)
- Power steering (red) (→ page 782)
- Rear axle steering (yellow) (→ page 782)
- Rear axle steering (red) (→ page 782)

Engine

- Coolant temperature (→ page 784)
- Engine diagnosis (→ page 784)
- Vehicles with a gasoline engine: engine operating temperature (→ page 784)
- Electrical malfunction (→ page 784)
- Reserve fuel with fuel filler flap location indicator (→ page 784)

Braking

- Electric parking brake (yellow) (→ page 788)
- USA: electric parking brake (red) (→ page 788)
- Canada: electric parking brake (red) (→ page 788)

RBS USA: Recuperative Brake System (→ page 788)

Canada: brakes (yellow)(→ page 788)

BRAKE USA: brakes (red) (→ page 788)

Canada: brakes (red) (→ page 788)

Driving and driving safety systems

ABS (→ page 791)

ESP® (→ page 791)

ESP® OFF (→ page 791)

ATTENTION ASSIST (→ page 791)

Traffic Sign Assist (→ page 791)

Distance warning (→ page 791)

Active Brake Assist (→ page 791)

Active Brake Assist (→ page 791)

Active Brake Assist (→ page 791)

AIRMATIC (→ page 791)

Mercedes-Benz emergency call system

SOS NOT READY Mercedes-Benz emergency call system (→ page 796)

Tire pressure monitoring system

Tire pressure monitoring system (→ page 796)

Exterior lighting

Standing lights (→ page 199)

Low beam (→ page 199)

High beam (→ page 200)

Turn signal lights (→ page 200)

Rear fog light (→ page 199)

Symbols on the central display

Drive Away Assist (→ page 340)

Rear cross traffic warning (→ page 341)

Maneuvering brake function (→ page 342)

Occupant safety

Warning/indicator lamp	Possible causes/consequences and ▶ Solutions
 Restraint system warning lamp	* The restraint system red warning lamp is lit while the vehicle is on. The restraint system is malfunctioning (→ page 98). **⚠ WARNING** Risk of injury due to malfunctions in the restraint system Components in the restraint system may be activated unintentionally or not deploy as planned in an accident. ▶ Have the restraint system checked and repaired immediately at a qualified specialist workshop. ▶ Drive on carefully. ▶ Note the messages on the driver's display. ▶ Consult a qualified specialist workshop immediately.
 Seat belt warning lamp flashes	* The red seat belt warning lamp flashes and an intermittent warning tone sounds. The driver or front passenger has not fastened his/her seat belt while the vehicle is in motion. ▶ Fasten your seat belt (→ page 98). There are objects on the front passenger seat. ▶ Remove the objects from the front passenger seat.

Warning/indicator lamp	Possible causes/consequences and ▶ Solutions
 Seat belt warning lamp lights up	* The red seat belt warning lamp lights up for six seconds once the vehicle has started. In addition, an intermittent warning tone may sound. The red seat belt warning lamp reminds the driver and front passenger to fasten their seat belts. ▶ Fasten your seat belt (→ page 98). If you have placed objects on the front passenger seat, the red seat belt warning lamp may remain lit.
 Occupant presence reminder warning lamp (white)	* The white occupant presence reminder warning lamp is lit. The occupant presence reminder is deactivated. ▶ Switch on the occupant presence reminder, see (→ page 127).
 Occupant presence reminder warning lamp (yellow)	* The yellow occupant presence reminder warning lamp is lit. The occupant presence reminder is malfunctioning ▶ Note the messages on the driver's display.

Drive system

Warning/indicator lamp	Possible causes/consequences and ▶ Solutions
 Reduced warning lamp power	* The yellow reduced-power warning lamp is on. Drive system power output is reduced. ▶ Note the messages on the driver's display.

Vehicle

Warning/indicator lamp	Possible causes/consequences and ▶ Solutions
 Power steering warning lamp (yellow)	* The yellow power steering warning lamp is lit while the vehicle is running. The power assistance or the steering itself is malfunctioning. ▶ Note the messages on the driver's display.
 Power steering warning lamp (red)	* The red power steering warning lamp is lit while the vehicle is running. The power assistance or the steering itself is malfunctioning.

Warning/indicator lamp	Possible causes/consequences and ▶ Solutions
	WARNING Risk of accident if steering capability is impaired If the steering does not function as intended, the vehicle's operating safety is jeopardized. ▶ Pull over and stop the vehicle safely as soon as possible, paying attention to road and traffic conditions. Do not continue driving under any circumstances. ▶ Consult a qualified specialist workshop. ▶ Note the messages on the driver's display.
 Rear axle steering warning lamp (yellow)	* The yellow rear axle steering warning lamp is lit while the vehicle is running. The rear axle steering is malfunctioning. ▶ Note the messages on the driver's display.
 Rear axle steering warning lamp (red)	* The red rear axle steering warning lamp is lit while the vehicle is running. The rear axle steering is malfunctioning. **WARNING** Risk of accident if steering capability is impaired If the steering does not function as intended, the vehicle's operating safety is jeopardized. ▶ Pull over and stop the vehicle safely as soon as possible, paying attention to road and traffic conditions. Do not continue driving under any circumstances.

Warning/indicator lamp	Possible causes/consequences and ▶ Solutions
	▶ Consult a qualified specialist workshop. ▶ Note the messages on the driver's display.

Engine

Warning/indicator lamp	Possible causes/consequences and ▶ Solutions
 Coolant warning lamp (red)	* The red coolant warning lamp is lit while the engine is running. Possible causes are: • The temperature sensor is malfunctioning • The coolant level is too low • The air supply to the radiator is obstructed • The radiator fan is faulty • The engine coolant pump is faulty If there is an additional warning tone, the coolant temperature has exceeded the maximum permissible temperature.

Warning/indicator lamp	Possible causes/consequences and ▶ Solutions
	⚠ **WARNING** Risk of burns when opening the hood If you open the hood in the event of an overheated engine or fire in the engine compartment, the following situations may occur: • You may come into contact with hot gases. • You may come into contact with other escaping hot operating fluids. ▶ Before opening the hood, allow the engine to cool down. ▶ In the event of a fire in the engine compartment, keep the hood closed and call the fire service. ▶ Stop immediately in accordance with the traffic conditions and switch off the vehicle. Do not continue driving. ▶ Note the messages on the driver's display. **If the coolant temperature display is at the lower end of the temperature scale:** ▶ Consult a qualified specialist workshop. **If the coolant temperature display is at the upper end of the temperature scale:** ▶ Exit the vehicle and keep a safe distance from it until the engine has cooled down. ▶ Check the coolant level (→ page 510). ▶ Make sure that the air supply to the radiator is not obstructed. ▶ Avoiding high loads on the engine, drive to the nearest qualified specialist workshop. In doing so, ensure that the coolant temperature display remains below the red area.

Warning/indicator lamp	Possible causes/consequences and ▶ Solutions
 Coolant warning lamp (yellow)	* The yellow coolant warning lamp is lit while the engine is running. Possible causes are: • The temperature sensor is malfunctioning • The charge air, transmission oil or battery cooling is faulty • The radiator shutters are blocked or defective ▶ Avoiding high loads on the engine, drive to the nearest qualified specialist workshop.
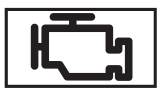 Check Engine warning lamp	* The yellow Check Engine warning lamp is lit while the engine is running. A malfunction has occurred in the engine, the exhaust system or the fuel system. The emissions limit value may have been exceeded and the engine may be running in emergency operation mode. In some states, legal requirements stipulate that you must immediately consult a qualified specialist workshop as soon as the yellow Check Engine warning lamp lights up. ▶ Have the vehicle checked as soon as possible at a qualified specialist workshop.
 Electrical malfunction warning lamp	* The red electrical malfunction warning lamp is lit. There is a malfunction in the electrics. ▶ Note the messages on the driver's display.

Warning/indicator lamp	Possible causes/consequences and ▶ Solutions
 Engine operating temperature warning lamp	* **Vehicles with a gasoline engine:** after a cold start, the blue engine operating temperature warning lamp is on. Engine output and engine torque are reduced. ▶ Take this into consideration in your driving style.
 Fuel reserve warning lamp flashes	* The yellow fuel reserve warning lamp lights up while you are driving. There has been pressure loss in the fuel system. The fuel filler cap is not closed correctly or the fuel system is leaking. ▶ Close the fuel filler cap. If the fuel filler cap has already been closed correctly: ▶ Consult a qualified specialist workshop.
 Fuel reserve warning lamp lights up	* The yellow fuel reserve warning lamp lights up while the engine is running. The fuel supply has dropped into the reserve range. ▶ Refuel.

Brakes

Warning/indicator lamp	Possible causes/consequences and ▶ Solutions
 Electric parking brake indicator lamp (red) (USA only)  Electric parking brake indicator lamp (red) (Canada only)  Electric parking brake indicator lamp (yellow)	* The red electric parking brake indicator lamp flashes or is lit. The yellow electric parking brake indicator lamp is also lit in the event of a malfunction. ▶ Note the messages on the driver's display.

Warning/indicator lamp	Possible causes/consequences and ▶ Solutions
RBS RBS warning lamp (USA only)	*The yellow RBS warning lamp (USA only) or the yellow (!) brake warning lamp (Canada only) is lit while the vehicle is running. ⚠ **WARNING** Risk of an accident due to a brake system malfunction If the brake system is malfunctioning, braking characteristics may be impaired. ▶ Drive on carefully. ▶ Have the brake system checked immediately at a qualified specialist workshop.
(!) Brakes warning lamp (yellow) (Canada only)	The Hill Start Assist may be malfunctioning. ▶ Adjust your speed and drive on carefully, leaving a suitable distance to the vehicle in front. ▶ If the driver's display shows a display message, observe it. ▶ Consult a qualified specialist workshop.

Warning/indicator lamp	Possible causes/consequences and ▶ Solutions
 Brakes warning lamp (USA only)  Brakes warning lamp (Canada only)	* The red brake warning lamp is lit while the vehicle is running. Possible causes are: • The brake force boosting is malfunctioning and the braking characteristics may be affected. • There is insufficient brake fluid in the brake fluid reservoir. ▶ Note the messages on the driver's display. **⚠ WARNING** Risk of accident and injury if brake force boosting is malfunctioning If brake force boosting is malfunctioning, increased brake pedal force may be necessary for braking. The braking characteristics may be impaired. The braking distance can increase in emergency braking situations. ▶ Stop in a safe location immediately. Do not continue driving. ▶ Consult a qualified specialist workshop. **⚠ WARNING** Risk of an accident due to low brake fluid level If the brake fluid level is too low, the braking effect and the braking characteristics may be impaired. ▶ Pull over and stop the vehicle safely as soon as possible, paying attention to road and traffic conditions. Do not continue driving under any circumstances. ▶ Consult a qualified specialist workshop. ▶ Do not add brake fluid.

Driving and driving safety systems

Warning/indicator lamp	Possible causes/consequences and ▶ Solutions
 ABS warning lamp	* The yellow ABS warning lamp is lit while the vehicle is running. ABS is malfunctioning. If an additional warning tone sounds, EBD is malfunctioning. Other driving systems and driving safety systems may also be malfunctioning. ▶ Note the messages on the driver's display. **⚠ WARNING** There is a risk of skidding if EBD or ABS is malfunctioning The wheels may lock during braking. The steerability and braking characteristics are heavily impaired and the braking distance may increase. In addition, other driving safety systems are switched off. ▶ Drive on carefully. ▶ Have the brake system checked immediately at a qualified specialist workshop. ▶ Drive on carefully. ▶ Consult a qualified specialist workshop.

Warning/indicator lamp	Possible causes/consequences and ▶ Solutions
 ESP® warning lamp flashes	* The yellow ESP® warning lamp flashes while the vehicle is in motion. One or more wheels have reached their grip limit (→ page 275). ▶ Adapt your driving style to suit the road and weather conditions.
 ESP® warning lamp lights up	* The yellow ESP® warning lamp is lit while the vehicle is running. ESP® is malfunctioning. Other driving systems and driving safety systems (e.g. BAS) may also be malfunctioning. ▶ Note the messages on the driver's display. ⚠ **WARNING** Risk of skidding if ESP® is malfunctioning If ESP® is malfunctioning, ESP® cannot carry out vehicle stabilization. In addition, other driving safety systems are switched off. ▶ Drive on carefully. ▶ Have ESP® checked at a qualified specialist workshop. ▶ Drive on carefully. ▶ Consult a qualified specialist workshop immediately.

Warning/indicator lamp	Possible causes/consequences and ▶ Solutions
 ESP® OFF warning lamp	* The yellow ESP® OFF warning lamp is lit while the vehicle is running. ESP® is deactivated. Other driving systems and driving safety systems may also be inoperative. **⚠ WARNING** Risk of skidding when driving with ESP® deactivated ESP® does not act to stabilize the vehicle. The availability of further driving safety systems is also limited. ▶ Drive on carefully. ▶ Deactivate ESP® only for as long as the situation requires. If ESP® cannot be activated, ESP® is malfunctioning. ▶ Have ESP® checked immediately at a qualified specialist workshop. ▶ Observe the notes on deactivating ESP® (→ page 275).
 ATTENTION ASSIST warning lamp	* The ATTENTION ASSIST warning lamp is lit. ATTENTION ASSIST is malfunctioning. ▶ Consult a qualified specialist workshop.

Warning/indicator lamp	Possible causes/consequences and ▶ Solutions
 Traffic Sign Assist warning lamp	* The Traffic Sign Assist warning lamp is lit. Traffic Sign Assist is malfunctioning. ▶ Note the messages on the driver's display.
 Distance warning lamp	* The red distance warning lamp lights up while the vehicle is in motion. The distance to the vehicle in front is too small for the speed selected. If there is an additional warning tone, you are approaching an obstacle at too high a speed. ▶ Be prepared to brake immediately. ▶ Increase the distance. Function of Active Brake Assist (→ page 300).
 Active Brake Assist warning lamp	* The Active Brake Assist warning lamp is on. Due to dirty sensors or a malfunction, the system is not available or the range of functions is restricted. ▶ Note the messages on the driver's display.

Warning/indicator lamp	Possible causes/consequences and ▶ Solutions
 Active Brake Assist warning lamp	* The Active Brake Assist warning lamp is on. The system is switched off or the range of functions has been automatically restricted. This may be the case if the driver is not wearing a seat belt or another driving system has been activated. ▶ Observe the notes on Active Brake Assist (→ page 300).
 Active Brake Assist warning lamp	* The Active Brake Assist warning lamp is on. After you drive off, the system's range of functions will be restricted due to the teach-in process. Depending on the ambient conditions, the teach-in process may take a few minutes. ▶ Observe the notes on Active Brake Assist (→ page 300).
 Suspension warning lamp (yellow)	* The yellow AIRMATIC warning lamp is lit. A malfunction has occurred in AIRMATIC. ▶ Note the messages on the driver display.
 Suspension warning lamp (red)	* The red AIRMATIC warning lamp is lit. A malfunction has occurred in AIRMATIC. ! **NOTE** The vehicle's driving characteristics will have changed significantly. ▶ Consult a qualified specialist workshop.

Warning/indicator lamp	Possible causes/consequences and ▶ Solutions
	▶ Note the messages on the driver display. ▶ Consult a qualified specialist workshop.

Mercedes-Benz emergency call system

Warning/indicator lamp	Possible causes/consequences and ▶ Solutions
 Mercedes-Benz emergency call system warning lamp	*The Mercedes-Benz emergency call system is malfunctioning. The Mercedes me connect system is also malfunctioning. ▶ Consult a qualified specialist workshop.

Tire pressure monitor

Warning/indicator lamp	Possible causes/consequences and ▶ Solutions
 Tire pressure monitoring system warning lamp flashes	*The yellow tire pressure monitor warning lamp (pressure loss/malfunction) flashes for approximately one minute and then remains lit. The tire pressure monitoring system is malfunctioning.

Warning/indicator lamp	Possible causes/consequences and ▶ Solutions
	⚠ **WARNING** There is a risk of an accident if the tire pressure monitoring system is malfunctioning The tire pressure monitoring system cannot issue a warning if there is pressure loss in one or more of the tires. Tires with insufficient tire pressure may impair the driving characteristics as well as steering and braking. ▶ Have the tire pressure monitoring system checked at a qualified specialist workshop. ▶ Consult a qualified specialist workshop.
 Tire pressure monitoring system warning lamp lights up	* The yellow tire pressure monitoring system warning lamp (pressure loss/malfunction) is lit. The tire pressure monitoring system has detected tire pressure loss in at least one of the tires. ⚠ **WARNING** Risk of an accident due to insufficient tire pressure • The tires can burst. • The tires can wear excessively and/or unevenly. • The driving characteristics as well as the steering and braking may be greatly impaired. You could then lose control of the vehicle. ▶ Observe the recommended tire pressures. ▶ Adjust the tire pressure if necessary. ▶ Stop the vehicle in accordance with the traffic conditions. ▶ Check the tire pressure and the tires.

1, 2, 3 ...

(SmartKey) battery ... 130

3D driver's display, 3D instrument cluster
- Function/notes ... 348

4MATIC ... 257

48 V on-board electrical system
- Displays in the driver's display ... 358
- Operating safety ... 83

A

A/C function
- Activating/deactivating (MBUX) ... 223
- Activating/deactivating (operating unit) ... 222

ABS ... 274

Acceleration
- Kickdown ... 256
- Optimized acceleration ... 240

Accident prevention ... 340

Accident, emergency call ... 57, 477

Activating/deactivating the acoustic locking verification signal ... 129

Activation
- Toll system ... 448

Active Blind Spot Assist
- Activating/deactivating ... 314
- Brake application ... 313
- Exit warning ... 311
- Function ... 311

Active Brake Assist
- Function ... 300
- Setting ... 306

Active Distance Assist DISTRONIC
- Activating/deactivating ... 287
- Active Emergency Stop Assist ... 295
- Active Lane Change Assist ... 296
- Active Speed Limit Assist ... 290
- Calling up a speed ... 287
- Function ... 284
- Increasing/decreasing the speed ... 287
- Route-based speed adaptation ... 290
- Storing a speed ... 287

Active Emergency Stop Assist ... 295

Active headlamps ... 202

Active hood ... 505

Active Lane Change Assist
- Activating/deactivating ... 300
- Function ... 296

Active Lane Keeping Assist
- Activating/deactivating ... 317
- Function ... 314
- Setting the sensitivity ... 317

Active light function ... 202

Active Parking Assist
- Automatic braking function ... 335
- Cross traffic warning ... 341
- Drive Away Assist ... 340
- Exiting a parking space ... 333
- Function ... 329
- Maneuvering brake function ... 342
- Memory Parking Assist ... 343
- Parking ... 331
- Pausing ... 335
- Remote Parking Assist ... 335

Active Service System PLUS ... 503

Active Speed Limit Assist ... 290

Active Steering Assist
- Activating/deactivating ... 295
- Active Emergency Stop Assist ... 295

Active Lane Change Assist ... 296
Function ... 293
Active Stop-and-Go Assist ... 292
Adaptive cruise control ... 290
Adaptive Highbeam Assist
Activating/deactivating ... 207
Adaptive Highbeam Assist Plus
Activating/deactivating ... 209
Additional mobile phone
Connecting ... 456
Additives
Engine oil ... 694
Fuel ... 694
Adjusting bass, mid-range and treble settings
Burmester® 4D surround sound system ... 499
Adjusting mid-range, treble and bass settings
Burmester® 4D surround sound system ... 499
Adjusting the balance/fader
Burmester® 4D surround sound system ... 499
Adjusting the sound focus
Burmester® 4D surround sound system ... 500
Adjusting treble, mid-range and bass settings
Burmester® 4D surround sound system ... 499
After-sales service ... 503
Air bag
Inflating ... 105
Overview ... 110
PASSENGER AIR BAG indicator lamp ... 100
Warning lamp ... 98
Air conditioning menu
Air distribution ... 224
Calling up ... 223
Climate control ... 223
Fragrance system ... 226
Front air conditioning ... 223
Ionization ... 226
Rear passenger compartment climate control ... 225
Air distribution
Adjusting ... 219, 224
Digital Vent Control ... 224
Overview ... 224
Air freshener system ... 226
Air inlet ... 512
Air pressure ... 547
Air suspension ... 317
Air vents
Adjusting ... 230
Air/water duct ... 512
Airflow
Adjusting ... 219
AIRMATIC
Setting the vehicle level ... 318
Vehicle level ... 317
Alarm system ... 158
All-wheel drive ... 257
Alternative route ... 422, 427
Ambient lighting ... 211

AMG TRACK PACE
Configuring 408
Drag Race 407
Function 404
Telemetry display 408
Track Race 405

Android Auto
Connecting a mobile phone (wired) 466
Connecting a mobile phone (wireless) 467
Ending 468
Information 466
Sound settings 468
Transferred vehicle data 468

Android smartphone 466

Animals 107

Anti-collision
Drive Away Assist 340

Anti-lock braking system 274

Anti-theft alarm system 158

Anti-theft protection
Immobilizer 158

Apple CarPlay®, Smartphone
Connecting an iPhone® (cable) 464
Connecting an iPhone® (wireless) 465
Ending 465
Notes 464
Overview 463
Sound settings 465
Transferred vehicle data 468

Apps, Mercedes me
Mercedes me calls 469
Mercedes me connect 472
Remote Parking Assist 335
Selecting (MBUX multimedia system) 475

Assistance system 273

Assistant display
Menu (driver display) 354

ASSYST PLUS
Battery disconnection periods 504
Service interval display 503
Service requirements 503

ATA
Deactivating the alarm 159
Function 158
Interior protection 161
Interior protection function 160
Tow-away alarm function 159
Tow-away protection 160

Attaching the parcel net 189

ATTENTION ASSIST
Function 280
Setting 282

Attention assistant 280

Audials
Deleting stations 484
Logging out 485
Registering 485
Saving stations 484
Selecting and connecting a station 484
Selecting stream 485
Setting options 485

Augmented reality
MBUX route guidance 439

Authorization
Setting 397

Authorized Mercedes-Benz Service Center 87

Authorized workshop 87

Automatic car wash 28, 512

Automatic climate control 223

Automatic distance control 284
Automatic driving lights 200
Automatic emergency call 478
Automatic engine start/stop 245
Automatic front passenger air bag shutoff
- Function 102
- Information (child restraint system on the front passenger seat) 116
- PASSENGER AIR BAG indicator lamp 100

Automatic Lane Change
- Active Lane Change Assist 296

Automatic measures after an accident 104
Automatic mirror folding function 218
Automatic seat adjustment 171
Automatic transmission
- DIRECT SELECT lever 251
- Drive programs 248
- DYNAMIC SELECT button 248
- Engages neutral 252
- Engaging drive position 255
- Engaging reverse gear 252
- Kickdown 256
- Manual gear shifting 255
- Oil temperature (driver's display) 355
- Selecting park position 253
- Steering wheel paddle shifters 255
- Switching gears 251
- Transmission position display 251
- Transmission positions 251

Autonomous braking 300

B

Bad weather light 203
Bag hook 188
BAS 275
Basic information 95
Battery (12 V battery)
- Charging 49, 532
- Notes 528
- Notes (starting assistance and charging) 531
- Replacing 534
- Starting assistance 49, 532

Battery (48 V)
- Notes 529

Battery (starter battery)
- charging, Remote Online 238

Beginner driver mode
- Activating/deactivating 279
- Function 279

Belt
- Fastening 98
- Notes on wearing correctly 97
- Releasing 110
- To adjust the height 98

Blind Spot Assist
- Activating/deactivating 314
- Function 311

Bluetooth®
- Activating/deactivating 398
- Connecting a mobile phone 456
- Information 397

Boost pressure, current (driver's display) 355
Brake Assist
- Active Brake Assist 300
- Brake Assist System 275

Brake Assist System 275
Brake disks 240

Brake fluid ... 695
Brake force distribution ... 276
Brake pads ... 240
Brakes
ABS (Anti-lock Braking System) ... 274
Active Brake Assist ... 300
BAS (Brake Assist System) ... 275
Driving tips ... 241
EBD (Electronic Brakeforce Distribution) ... 276
Electric parking brake ... 268
Handbrake ... 268
HOLD function ... 277
Limited braking effect (salt-treated roads) ... 241
New/replaced brake pads/brake discs ... 240
Notes on breaking in a new vehicle ... 240
Parking brake ... 268
Post-collision brake ... 104, 105
Braking assistance
Active Brake Assist ... 300
Brake Assist System ... 275
Breakdown
Changing a wheel ... 568
Flat tire ... 51, 522
Overview of aids ... 76
Tow-starting ... 541
Towing methods ... 53, 535
Transporting the vehicle ... 537, 539
Breakdown (Roadside Assistance) ... 82
Burmester® 4D surround sound system
Adjusting the balance/fader ... 499
Adjusting the sound focus ... 500
Adjusting treble, mid-range and bass settings ... 499
Calling up the sound menu ... 499
Information ... 499
Selecting the sound profile ... 500

C

Call list
Deleting ... 461
Making a call ... 461
Overview ... 461
Selecting options ... 461
Calling the customer center for Mercedes-Benz ... 470
Calling up the sound menu
Burmester® 4D surround sound system ... 499
Calls, Telephone operation
Accepting ... 458
Activating functions during a call ... 458
Calls with several participants ... 458
Declining ... 458
Ending a call ... 458
Incoming call during an existing call ... 459
Making ... 458
Mercedes me ... 469
Telephone ... 458
Using overhead control panel ... 469
Camera
360° camera ... 321
Button ... 324
Care ... 516
Cleaning ... 516
Driver camera ... 394
Function ... 321
Information ... 272
Opening the camera cover (rear view camera) ... 325
Rear view camera ... 319

Select view ... 325

Camera app
Overview ... 501
Recording video ... 501
Settings ... 502
Taking a photo ... 501

Car key ... 128

Car wash
Automatic car wash ... 28, 512
Power washer ... 513
Washing by hand ... 514

Car-to-X-Communication
Display on map ... 438
Overview ... 438
Sending hazard warnings ... 439

Care
Air/water duct ... 512
Automatic car wash ... 28, 512
Camera ... 516
Decorative foil ... 515
Display ... 517
Exterior lighting ... 516
Head-up display ... 517
Headliner ... 517
Paint ... 514
Plastic trim ... 517
Power washer ... 513
Real wood/trim elements ... 517
Seat belts ... 517
Steering wheel ... 517
Vehicle interior ... 517
Vehicle parts ... 516
Washing by hand ... 514
Wheels/rims ... 516

Caring for plastic trim ... 517

Caring for rims ... 516

Central display ... 375

Central locking system
Button ... 138
SmartKey ... 129

Change of address ... 82

Change of ownership ... 82

Changing a wheel
Preparation ... 568
Raising the vehicle ... 570

Charging
12 V battery ... 49, 532
USB port ... 39, 182, 195
Wirelessly charging a mobile phone ... 195

Checking the coolant level ... 510

Child safety lock
Rear door ... 124
Side windows (rear passenger compartment) ... 125

Child seat
Adjusting the vehicle seat ... 118
Basic instructions ... 112
Front passenger seat ... 116
Installing ISOFIX ... 121
Notes on fastening (MBUX Interior Assistant) ... 392
Rearward-facing ... 118
Risks/dangers ... 114
Securing on the rear seat with the seat belt ... 123
Securing to the front passenger seat with the seat belt ... 123
The most important information in brief ... 112
Top Tether ... 122

Children
Avoiding dangers in the vehicle..... 114
Basic instructions..... 112
Special seat belt retractor..... 120
Chock..... 52, 568
City lighting..... 203
Classic menu display content
Selecting..... 351
Clean varnish..... 514
Cleaning
Air/water duct..... 512
Automatic car wash..... 28, 512
Camera..... 516
Decorative foil..... 515
Paint..... 514
Power washer..... 513
Real wood/trim elements..... 517
Sensors..... 516
Vehicle interior..... 517
Vehicle parts..... 516
Washing by hand..... 514
Cleaning carpets..... 517
Cleaning seat covers..... 517
Climate bar, Air conditioning system, Air conditioning system menu, Climate menu
Configuring..... 221
Operating..... 221
Climate control, Air conditioning system
Activating/deactivating..... 220
Activating/deactivating (rear operating unit)..... 221
Activating/deactivating the A/C function (control panel)..... 222
Activating/deactivating the A/C function (MBUX)..... 223
Adjusting..... 223
Air conditioning menu..... 223
Air distribution..... 219
Air distribution settings..... 224
Air vents (front)..... 230
Air vents (rear passenger compartment)..... 231
Airflow..... 219
Automatic control..... 223
Automatically controlling (rear operating unit)..... 224
Closing/opening the windows (air-recirculation button)..... 55
Defrosting a window..... 223
Defrosting windows..... 226
Demisting the windshield..... 219
Filling capacity for refrigerant and PAG oil..... 698
Fine particle status display..... 223
Fragrance system..... 226, 227
Inserting/removing the flacon (fragrance system)..... 227
Ionization..... 226
Notes..... 219
Operating unit..... 219
Pre-entry climate control for departure time..... 228
Rear passenger compartment operating unit..... 220
Rear window heating..... 219
Refrigerant..... 697
Resetting the climate control settings..... 56
Residual heat..... 226
Switching air-recirculation mode on/off..... 226
Synchronization function..... 225
Temperature..... 219
Ventilation with comfort opening..... 152

Climate control settings
Resetting ... 56
COC papers, CERTIFICATE OF CONFORMITY ... 576
Cockpit
Overview (central display) ... 60
Overview (MBUX Hyperscreen) ... 62
Collision detection (parked vehicle)
Setting ... 271
Combination switch
Lights ... 200
Windshield wipers ... 213
Comfort
Information ... 18
Communication module
Disconnecting automatically from the Internet ... 482
Setting up an Internet connection ... 481
Commuter route ... 422, 428
Compass ... 444
Components relevant to radio regulation
Declaration of conformity ... 85
Configuring settings
Camera app ... 502
Connection status
Displaying ... 484
Overview ... 483
Contacts, Address book, Phone book
Calling up ... 460
Deleting ... 460
Information ... 459
Making a call ... 460
Name format ... 460
Note about suggestions ... 457
Options ... 460
Selecting options for suggestions ... 458
Storing ... 460
Content sharing
Gallery app ... 475
Control element (MBUX multimedia system)
Setting acoustic feedback ... 378
Control elements: ... 80
Convenience closing feature ... 152
Convenience feature
Closing/opening the windows (air-recirculation button) ... 55
Convenience opening ... 152
Coolant
Capacity ... 696
Notes ... 695
Cooling ... 219
Copyright
License ... 94
Copyrights
Trademarks ... 94
Cornering light function ... 202
Correct use ... 87
Cover ... 153
Cross traffic (warning) ... 341
Crosswind Assist ... 276
Cruise control
Activating/deactivating ... 283
Calling up a speed ... 283
Function ... 282
Requirements: ... 283

Setting a speed ... 283
Storing a speed ... 283
Cup holder ... 191, 193
Customer Assistance Center (CAC) ... 88
Customer Relations Department ... 88

D

Damage
Limited protection ... 107
Damping system ADS PLUS
AIRMATIC ... 317
Setting the vehicle level ... 318
Dashcam
Configuring settings ... 453
Selecting a USB device ... 452
Starting/stopping a video recording ... 452
Data processing in the vehicle ... 89
Data protection
Granting authorization ... 397
Data protection rights ... 92
Data storage
Data protection rights ... 92
Electronic control units ... 89
Event Data Recorder ... 93
MBUX multimedia system/Mercedes me connect ... 93
Online services ... 92
Daytime running lamps, Daytime running lamp mode
Activating/deactivating ... 209
Deactivating the alarm ... 159
Dealership ... 87
Declaration of conformity
Components relevant to radio regulation ... 85
Decorative foil ... 515
Definitions
Tires and loading ... 562
Defrost function ... 223
Deployed components
Limited protection ... 107
Deployment situations ... 105
Destination
Editing a suggestion ... 435
Editing intermediate destinations ... 426
Editing the previous destinations ... 435
Saving as a favorite ... 435
Destination entry
Accepting a destination suggestion ... 418
Entering a 3 word address ... 420
Entering an intermediate destination ... 426
Entering geo-coordinates ... 420
Selecting a contact ... 419
Selecting a received destination ... 421
Selecting from favorites ... 421
Selecting from the map ... 421
Selecting previous destinations ... 418
Destination entry (multimedia system)
Notes ... 416
Selecting a POI ... 418
Detecting inattentiveness ... 280
Diagnostics connection ... 86
DIGITAL LIGHT
Activating/deactivating ... 205
Active headlamps ... 202
Adaptive Highbeam Assist ... 206
Adaptive Highbeam Assist Plus ... 207
Assistance functions ... 204
Bad weather light ... 203
City lighting ... 203
Cornering light function ... 202

Dynamic low beam ... 202
Extended range fog lamps ... 203
Highway mode ... 203
Overview ... 202
Topographical compensation ... 203

Digital Operator's Manual ... 78

Digital Vehicle Key
Function ... 132
Managing ... 134
Problem ... 137
Removing ... 135
Setting up ... 133
Starting the vehicle ... 235
Unlocking setting ... 137
Unlocking/locking the vehicle ... 136

Digital Vent Control ... 224

Dinghy towing
Pulling/towing ... 347

DIRECT SELECT lever
Automatic transmission ... 251
Engages neutral ... 252
Engaging drive position ... 255
Engaging park position automatically ... 253
Engaging reverse gear ... 252
Function ... 251
Gearshift recommendation ... 256
Manual gearshifting ... 255
Selecting park position ... 253

Display
Care ... 517

Display (driver's display)
Overview of displays ... 358

Display (MBUX multimedia system)
Settings ... 396

Display message
Calling up on driver display ... 700
Notes ... 700

Display messages
--- mph ... 752
--- mph ... 748
12 V On-board Electrical System Service Required ... 767
48 V Battery See Operator's Manual ... 769
Add Washer Fluid ... 731
ATTENTION ASSIST Nodding Off Take a Break! ... 747
ATTENTION ASSIST: Take a Break! ... 747
Automatic Driving Lights Inoperative ... 713
Battery Overheated Stop! Everyone Get Out! Outdoors if Possible ... 769
BRAKE Brake Immediately ... 742
Brake Light Left ... 720
Brake Light Right ... 720
Camera View Reduced See Operator's Manual ... 763
Center Brake Light ... 720
BRAKE Check Brake Fluid Level ... 742
Check Coolant Level See Operator's Manual ... 732
Check Engine Oil Level At Next Refueling (Add 1 Quart) ... 776
Check Left Cornering Light ... 717

Check Left Daytime Running Light..... 717
Check Left High Beam..... 716
Check Left Low Beam..... 716
Check Right Cornering Light..... 718
Check Right Daytime Running Light..... 717
Check Right High Beam..... 717
Check Right Low Beam..... 716
Check Tires..... 771
Compressor Is Cooling..... 752
Coolant Stop Switch Off Vehicle... 732
Currently Unavailable See Operator's Manual (ABS and ESP®)..... 743
Currently Unavailable See Operator's Manual (ESP®)..... 745
Digital Vehicle Key Charge Device..... 712
Do Not Exceed 12mph..... 751
Do Not Leave People or Animals in the Vehicle..... 706
Don't Forget Your Key..... 709
Engine Oil Level Cannot Be Measured..... 777
Engine Oil Level Reduce Oil Level..... 776
Engine Oil Level Stop Switch Off Vehicle..... 776
Engine Oil Pressure Stop Switch Off Vehicle..... 777
Front Left Malfunction Service Required..... 701
Front Right Malfunction Service Required..... 702
Fuel Filler Cap Open..... 733
Fuel Reserve..... 733
Initializing Key Please Wait..... 708
Initializing Key Please Wait..... 712
Initiating Emergency Stop..... 756, 761
Inoperative See Operator's Manual (ABS and ESP®)..... 744
EBD Inoperative See Operator's Manual (EBD, ABS and ESP®)..... 746
Inoperative See Operator's Manual (ESP®)..... 745
SOS Inoperative..... 766
Key Does Not Belong to Vehicle... 712
Key Not Detected (red display message)..... 708
Key Not Detected (white display message)..... 707
Key Not Detected Place Digital Vehicle Key in Mobile Phone Cradle..... 710
Key Not Detected..... 710
Left Window Airbag Malfunction Service Required..... 703
License Plate Light..... 722
Lowering..... 750

Malfunction Do Not Exceed 50 mph..... 749
Malfunction See Operator's Manual..... 713
Obtain a New Key..... 707
Off..... 753
HOLD Off..... 747
PARK Parking Brake See Operator's Manual..... 738
Parking Light Front Left..... 715
Parking Light Front Right..... 716
Please Correct Tire Pressure..... 772
Please Wait Charging 48 V Battery..... 769
Rear Axle Steering Currently Malfunctioning..... 727
Rear Axle Steering Malfunction Service Required..... 727
Rear Axle Steering Malfunction Stop Immediately..... 728
Rear Fog Light..... 721
Rear Left Backrest Not Latched..... 730
Rear Right Backrest Not Latched..... 730
Reduce Speed..... 774
PARK Release Parking Brake..... 741
Replace Key Battery..... 707
Replace SmartKey See Operator's Manual..... 711
Restraint System Malfunction Service Required..... 701
Reversing Light..... 721
Right Window Airbag Malfunction Service Required..... 704
Rising..... 751
Second Row of Seats, Left Malfunction Service Required..... 702
Second Row of Seats, Right Malfunction Service Required..... 703
Slow Down..... 751
Steering Malfunction Drive Carefully Service Required..... 726
Steering Malfunction Increased Physical Effort See Operator's Manual..... 726
Steering Malfunction Stop Immediately See Operator's Manual..... 726
STOP Vehicle Level Too Low..... 750
Stop Vehicle See Operator's Manual..... 767
Stop Vehicle See Operator's Manual..... 768
Stop Vehicle To Charge the 12 V Battery Do Not Switch Off Vehicle..... 768
Suspended..... 752
Switch Off Lights..... 714
Switch On Headlights..... 713
Switch on vehicle to charge the 12 V battery..... 768
PARK Switch on Vehicle to Release the Parking Brake..... 741

Tail Light Left..... 721
Tail Light Right..... 721
Take SmartKey With You..... 711
Temporarily Unavailable Sensors Dirty..... 762
Tires Overheated..... 773
Turn Signal Indicator, Front Left.... 718
Turn Signal Indicator, Front Right..... 719
Turn Signal Indicator, Left Mirror.. 719
Turn Signal Indicator, Rear Left..... 718
Turn Signal Indicator, Rear Right... 719
Turn Signal Indicator, Right Mirror..... 720
Vehicle Rising Please Wait..... 751
Warning Tire Malfunction..... 772
Wheel Sensor(s) Missing..... 771
Active Blind Spot Assist Currently Unavailable See Operator's Manual..... 760
Active Blind Spot Assist Inoperative..... 760
Active Brake Assist Functions Currently Limited See Operator's Manual..... 754
Active Brake Assist Functions Limited See Operator's Manual..... 754
Active Distance Assist Currently Unavailable See Operator's Manual..... 753
Active Distance Assist Inoperative..... 753
Active Distance Assist Now Available..... 754
Active Emergency Stop Assist Currently Unavailable See Operator's Manual..... 756
Active Emergency Stop Assist Inoperative..... 757
Active Hood Malfunction See Operator's Manual..... 728
Active Lane Change Assist Currently Unavailable See Operator's Manual..... 757
Active Lane Change Assist Inoperative... 757
Active Lane Keeping Assist Currently Unavailable See Operator's Manual..... 760
Active Lane Keeping Assist Inoperative... 760
Active Lane Keeping Assist Limited Range of Functions See Operator's Manual..... 761
Active Parking Assist and PARKTRONIC Inoperative See Operator's Manual..... 766
Active Parking Assist Limited Availability of Maneuvering Assistance See Operator's Manual..... 766
Active Steering Assist Currently Unavailable Due to Multiple Emergency Stops..... 756
Active Steering Assist Currently Unavailable See Operator's Manual..... 755
Active Steering Assist Inoperative..... 755
Active Stop & Go Assist Currently Unavailable See Operator's Manual..... 758
Active Stop & Go Assist Inoperative See Operator's Manual..... 759

Adaptive Highbeam Assist Currently Unavailable See Operator's Manual..... 714
Adaptive Highbeam Assist Inoperative.... 714
Adaptive Highbeam Assist Plus Currently Unavailable See Operator's Manual..... 715
Adaptive Highbeam Assist Plus Inoperative..... 715
Ambient Lighting Warning Support Inoperative..... 729
ATTENTION ASSIST Stay Alert! (white display message)..... 748
ATTENTION ASSIST Stay Alert! (yellow display message)..... 748
Automatic Lane Change Currently Unavailable See Operator's Manual..... 758
Automatic Lane Change Inoperative..... 758
Auxiliary Battery Malfunction (red display message)..... 737
Auxiliary Battery Malfunction (white display message)..... 737
Blind Spot Assist Currently Unavailable See Operator's Manual..... 759
Blind Spot Assist Inoperative..... 759
Cannot Start Vehicle See Operator's Manual..... 723
Change the steering wheel/ seat position until 6 dots are visible on the upper edge of the screen..... 764
Check Brake Pads See Operator's Manual..... 743
Check Tire and Tire Pressure..... 774
Check Tire Pressure Then Restart Run Flat Indicator..... 775
Cruise Control Inoperative..... 748
Cruise Control Off..... 748
Depress Brake to Shift from P..... 734
Depress Brake to Shift to D or R..... 734
Depress Brake to Shift to R..... 734
DIGITAL LIGHT Functions Limited..... 714
Driver Camera Inoperative See Operator's Manual..... 764
Front Passenger Airbag Disabled See Operator's Manual..... 704
Front Passenger Airbag Enabled See Operator's Manual..... 705
Function Blocked by Folded Center Backrest..... 730
Hazard Warning Light Malfunction..... 715
Head-up Display Brightness Currently Reduced See Operator's Manual..... 725
Head-up Display Currently Unavailable See Operator's Manual..... 725
Head-up Display Inoperative..... 725
Indicator Lamp in Driver's Display Inoperative Service Required..... 722
N Automatically Activated Please Shift to Transmission Position Again..... 736

N is Engaged Shift to Desired Drive Range..... 736
Occupant Presence Reminder Inoperative..... 706
PARKTRONIC Inoperative See Operator's Manual..... 765
Place the Key in the Marked Space See Operator's Manual..... 709
PRE-SAFE Inoperative See Operator's Manual..... 764
PRE-SAFE PLUS Inoperative See Operator's Manual..... 765
PRE-SAFE Pulse Side Inoperative See Operator's Manual..... 765
Reduced Drive System Performance See Operator's Manual..... 722
Restricted Mode Activated Drive Power Reduced..... 747
Reversing Not Possible Service Required..... 736
Risk of Vehicle Rolling Away Apply Parking Brake When Parking..... 735
Risk of Vehicle Rolling Away Driver's Door Open Position P Not Selected..... 735
Risk of Vehicle Rolling Away N Activated Manually No Automatic Change to P..... 735
Run Flat Indicator Inoperative..... 775
Searching for Key in Stowage Tray or Digital Vehicle Key in Inductive Charging Bracket... See Operator's Manual..... 709
Service Required Apply Parking Brake to Park..... 734
Service Required Do Not Change Transmission Position..... 736
Shift to P Only When Vehicle Is Stationary..... 733
Snow Chain Mode Maximum Speed Exceeded..... 728
Starting Possible Again..... 770
The camera view of the driver is currently obstructed Affected functions: See operator's manual..... 764
Tire Pressure Monitor Currently Unavailable..... 770
Tire Pressure Monitor Inoperative..... 770
Tire Pressure Monitor Inoperative Tire Pressure Sensors Missing..... 771
To Deselect P or N Depress Brake and Start Vehicle..... 734
To Switch Off Vehicle Press and Hold Start/Stop Button for at Least 3 Seconds or Press 3 Times..... 731
Traffic Sign Assist Currently Unavailable See Operator's Manual..... 749
Traffic Sign Assist Inoperative..... 749
Transmission Malfunction Stop..... 736
Vehicle Ready to Drive Shutdown Occurs When Locked or After a Few Minutes..... 724

Vehicle Ready to Drive Shutdown Occurs When Locked or Automatically in XX Mins ... 724
Windshield Wiper Malfunction ... 731
Displaying road names/house numbers ... 440
Distance control ... 284
Distance warning ... 300
DISTRONIC ... 284
Door
Child safety lock (rear door) ... 124
Emergency key ... 141
Extending/retracting door handles ... 138
Opening (from the inside) ... 137
Power closing function ... 141
Unlocking (inside) ... 137
Door handles
Extending/retracting ... 138
Door operating unit
Function seat ... 74
DOT, Tire Identification Number (TIN) ... 558
Drag Race ... 407
Drinking and driving ... 241
Drive Away Assist ... 340
Drive position ... 255
Drive program display ... 249
Drive programs
Selecting ... 249
Driver camera
Function ... 394
Switching on/off ... 395
Driver display
Service menu ... 353
Driver's display, Instrument cluster
48 V on-board electrical system ... 358
Assistant display ... 354
Head-up display ... 356
Menus ... 349
Navigation menu ... 355
Notes ... 348
Operating ... 349
Service due date ... 503
Status displays ... 358
Warning/indicator lamps ... 64, 68, 778
Driver's seat
Adjusting (Seat Comfort) ... 163
Adjusting electrically ... 165
Easy entry and exit feature ... 176
Seat heating ... 172
Driving safety system
ABS (Anti-lock Braking System) ... 274
Active Brake Assist ... 300
Active Lane Change Assist ... 296
Active Steering Assist ... 293
ATTENTION ASSIST ... 280
BAS (Brake Assist System) ... 275
Blind Spot Assist / Active Blind Spot Assist ... 311
Cameras ... 272
Cruise control ... 282
EBD (Electronic Brakeforce Distribution) ... 276
ESP® (Electronic Stability Program) ... 275
Hill Start Assist ... 278
HOLD function ... 277
Overview ... 273
Radar and ultrasonic sensors ... 272
STEER CONTROL ... 276
Traffic Sign Assist ... 306
Your responsibility ... 272
Driving system ... 273

Driving tips
- Drinking and driving ... 241
- General driving tips ... 241
- Notes on breaking in a new vehicle ... 240
- Optimized acceleration ... 240
- Rear axle steering ... 245

Drowsiness detection ... 280

Duplicate key ... 132

Dynamic handling control system ... 275

Dynamic low beam
- Overview ... 202

DYNAMIC SELECT
- Configuring drive program I ... 250
- Displaying engine data ... 250
- Displaying vehicle data ... 250
- Drive program display ... 249
- Drive programs ... 248
- Function ... 248
- Selecting the drive program ... 249

E

E10 ... 693

Easy entry feature
- Adjusting ... 177
- Function ... 176

Easy exit feature
- Adjusting ... 177
- Function ... 176

EBD, Electronic Brakeforce Distribution ... 276

ECO Assist
- 48 V on-board electrical system ... 247

ECO display ... 246

ECO start/stop button
- Automatic engine start/stop ... 246

ECO start/stop function
- Automatic engine start ... 245
- Automatic engine stop ... 245
- Conditions (automatic engine stop/start) ... 56
- Function ... 245
- Switching off/on ... 246

Electric parking brake
- Applying automatically ... 268
- Emergency braking ... 270
- Manually applying/releasing ... 269
- Releasing automatically ... 269

Electrical fuses ... 51, 541

Electronic Stability Program ... 275

Emergency
- Emergency guide ... 58
- First-aid kit (soft sided) ... 31, 48, 521
- Overview of aids ... 76
- Reflective safety vest ... 29, 47, 520
- Warning triangle ... 521

Emergency braking
- Active Brake Assist ... 300
- Brake Assist System ... 275
- Carrying out ... 270
- Electric parking brake/handbrake ... 268

Emergency key
- Door ... 141

Emergency operation mode
- Starting the vehicle ... 237

Emergency release
- Trunk lid (from inside) ... 150

Emergency stop assistant ... 295

Emergency Tensioning Devices
- Inflating ... 105

ENERGIZING Coach
Calling up ... 414
Function ... 413
ENERGIZING COMFORT
Overview of programs ... 410
Starting the program ... 411
Engine
Emergency operation mode ... 237
Emergency start ... 541
Engine number ... 690
Jump-starting ... 531
Parking (start/stop button) ... 260
Starting (Digital Vehicle Key) ... 235
Engine data
Displaying ... 250
DYNAMIC SELECT ... 250
Engine number ... 690
Engine oil, Oil
Additives ... 694
Capacity ... 695
Checking the oil level using the driver display ... 27, 508
MB-Freigabe or MB-Approval ... 695
Quality ... 695
Refilling ... 508
Temperature (driver's display) ... 355
Engine oil temperature (driver's display) ... 355
Engine output, current (driver's display) ... 355
Entering characters
Function/notes ... 387
On the touchscreen ... 388
Setting the keyboard language ... 389
Environmentally friendly driving ... 79
ESC, Electronic Stability Control ... 275
ESP®
Activating/deactivating ... 276
Crosswind Assist ... 276
Function ... 275
Event Data Recorder ... 93
Exit warning
Blind Spot Assist / Active Blind Spot Assist ... 311
Exiting a parking space
Active Parking Assist ... 329
Drive Away Assist ... 340
PARKTRONIC ... 325
Exterior lighting
Care ... 516
Exterior mirrors
Parking position ... 217

F

Factory settings
MBUX reset function ... 404
Fatigue detection ... 280
Favorites
Adding a destination ... 421
Home address ... 421
Work address ... 421
Film coverings
On camera/sensors ... 272
Fine particle status display ... 223
First aid
First-aid kit (soft sided) ... 31, 48, 521
First-aid kit (soft sided) ... 31, 48, 521
Fitting accessories
Limited protection ... 107
Flacon ... 227

Flat tire
Changing a wheel ... 568
MOExtended ... 522
Notes ... 51, 522
TIREFIT kit ... 524
Flat towing
Pulling/towing ... 347
Floor mats ... 197
Fog lamp ... 200
Fog light (extended range) ... 203
Foil covering
Radar and ultrasonic sensors ... 272
Fragrance ... 226
Fragrance system
Activating/deactivating ... 226
Adjusting ... 227
Inserting/removing the flacon ... 227
Perfume vial ... 227
Free software ... 94
Frequencies
Mobile phone ... 577
Two-way radio ... 577
Front air bag
Inflating ... 105
Front headlamps ... 199
Front passenger air bag
Disabling/enabling ... 101
Front passenger air bag shutoff, PASSENGER AIR BAG OFF
Information (child restraint system on the front passenger seat) ... 116
Front passenger display
Information ... 490
Operating ... 491
Overview ... 367
Visual shield function ... 367
Front passenger seat
Adjusting (Seat Comfort) ... 163
Adjusting electrically ... 165
Fuel
Additives ... 694
E10 ... 693
Gasoline ... 693
Quality (gasoline) ... 693
Refilling ... 20, 257
Reserve ... 694
Sulfur content ... 693
Tank capacity ... 694
Fuel reserve ... 694
Function in the event of an accident ... 106
Function seat ... 74
Fuses
Cockpit ... 543
Engine compartment ... 542
Fuse assignment diagram ... 51, 541
Notes ... 51, 541
Passenger footwell ... 543
Trunk ... 544

G

G-meter, Accelerometer ... 355
Gallery app
Content sharing ... 475
Operating ... 475
Garage door opener
Clearing the memory ... 267
Opening/closing a door ... 266
Problem ... 265

Garage door openers
Programming buttons 262
Synchronizing the rolling code 264
Gas station search
Starting automatic search 429
Switching the automatic search on/off 429
Gasoline 693
Gearshift
DIRECT SELECT lever 251
Manual 255
General driving tips 241
Genuine parts 79
Glide mode 257
Glove box
Locking/unlocking 39, 183
Grab handles 162

H

Handbrake 268
Handling characteristics
Unusual 545
HANDS-FREE ACCESS 147
hands-free system 453
Hazard warning lights 47, 201
Hazard warnings
Car-to-X-Communication 438
Head restraint
Adjusting (rear passenger compartment) 169
Adjusting manually (front, 4-way) 168
Removing/installing (rear passenger compartment) 170
Head-up display
Care 517
Function 356
Memory function 178
Operating 357
Switching on/off 358
Headlamp flashing 200
Headlamp range control 203
Headlamps 199
Heating
Activating/deactivating 220
Center console 220
Climate control 219
Panel heating 173
Rear window 219
Seat 172
Steering wheel 176
Help call
Mercedes-Benz emergency call system 57, 477
High beam 200
Highway mode 203
Hill Start Assist 278
HOLD function
Function 277
Switching on/off 277
Home screen
Central display 375
Hood
Active hood 505
Opening/closing 506

I

Identification plate
Engine 690
Refrigerant 697

Vehicle ... 690
Images
Gallery app ... 475
Immobilizer ... 158
In-Car App Pass ... 480
In-Car Apps
Installing ... 480
Incorrect behavior by vehicle occupants
Limited protection ... 107
Indicator/warning lamps
Driver's display ... 778
PASSENGER AIR BAG ... 100
Individual drive program
Configuring ... 250
Inside rearview mirror ... 217
Installing
Snow chains ... 41, 546
Tires/wheels ... 572
Intelligent Light System
Activating/deactivating ... 205
Interior lighting
Adjusting ... 210
Ambient lighting ... 211
MBUX reading light ... 392
Switch-off delay time ... 212
Interior protection ... 161
Intermediate destination
Editing ... 426
Starting an automatic gas station search ... 429
Starting the automatic service station search ... 429
Internet
Mercedes me connect ... 472
Setting up a Wi-Fi hotspot ... 398
Smartphone integration ... 19
Internet connection
Canceling permission (mobile phone) ... 483
Disconnecting automatically (communication module) ... 482
Displaying the connection status ... 484
Information ... 481
Overview of connection status ... 483
Restrictions ... 481
Setting up (communication module) ... 481
Setting up (Wi-Fi) ... 483
Ionization ... 226
iPhone®
Smartphone integration ... 463
ISOFIX child seat anchor
Installing ... 121

J

Jack
Storage location ... 52, 568
Jump-start connection ... 49, 532

K

Key
Problem ... 132
Replacement key ... 132
KEYLESS-GO
Deactivating ... 57, 129
Locking/unlocking the vehicle ... 139
Problem ... 140
Unlocking setting ... 129
Kickdown ... 256
Knee bag ... 110

L

Lane Change Assist ... 296
Lane Keeping Assist ... 314
Lane recognition
- Active Lane Change Assist ... 296
- Active Lane Keeping Assist ... 314

Language
- Notes ... 399
- Setting ... 400

Level control
- AIRMATIC ... 317

License plate (front) ... 85
License plate assembly (front) ... 85
Light switch ... 199
Lighting
- Dynamic low beam ... 202
- Interior lighting ... 210

Lights
- Active headlamps ... 202
- Adaptive Highbeam Assist ... 206
- Adaptive Highbeam Assist Plus ... 207
- Assistance functions ... 204
- Automatic driving lights ... 200
- Bad weather light ... 203
- City lighting ... 203
- Combination switch ... 200
- Cornering light function ... 202
- DIGITAL LIGHT ... 202
- Dynamic low beam ... 202
- Fog light (extended range) ... 203
- Hazard warning lights ... 47, 201
- High beam ... 200
- Highway mode ... 203
- Interior lighting ... 210
- Locator lighting ... 210
- Reading lamp ... 210
- Rear fog light ... 200
- Responsibility for lighting systems ... 199
- Setting low beam ... 209
- Switch-off delay time ... 210
- Switching on the daytime running lamps ... 209
- Switching the Intelligent Light System on/off ... 205
- Topographical compensation ... 203
- Turn signals ... 200

Limited Warranty ... 89

Live Traffic Information
- Displaying the traffic map ... 436
- Displaying traffic incidents ... 437
- Information from the service provider ... 436

Load index
- Tires ... 560

Load-bearing capacity
- Tires ... 560

Loading
- Attaching the parcel net ... 189
- Bag hook ... 188
- Definitions ... 562
- Notes ... 180
- Roof luggage rack ... 33, 190
- Stowage space under the trunk floor ... 38, 190
- Tie-down eyes ... 38, 188

Loading guidelines ... 180
Loading information table ... 553
Loads ... 180
Locator lighting ... 210
Locking/unlocking
- Automatic locking (MMS) ... 141

Digital Vehicle Key ... 136
Doors (from the inside) ... 137
Emergency key ... 141
KEYLESS-GO ... 139

Loud sound
PRE-SAFE® Sound ... 103

Low-beam headlamps
Activating/deactivating ... 199
Adjusting ... 209
Left-hand/right-hand traffic ... 209

Lubricants ... 691

Luggage
Attaching the parcel net ... 189

Luggage rack ... 180

Lumbar support ... 167

M

Maintaining safe distance
Active Distance Assist DISTRONIC ... 287

Maintaining the headliner ... 517

Maintaining the steering wheel ... 517

Maintenance
Vehicle ... 82

Maintenance Management
Notes ... 504
Transferred data ... 504

Malfunction
Restraint system ... 98

Malfunction message
Driver's display ... 700

Maneuvering
Drive Away Assist ... 340
Maneuvering brake function ... 342

Maneuvering assistant
Cross traffic warning ... 341
Drive Away Assist ... 340
Maneuvering brake function ... 342

Maneuvering brake function ... 342

Maneuvering support ... 341

Manual gearshifting
Activating/deactivating ... 256

Map, Traffic map
Avoiding an area ... 442
Avoiding an area (overview) ... 442
Changing an area ... 443
Deleting an area ... 443
Displaying online map contents ... 446
Displaying the compass ... 444
Displaying the map version ... 442
Displaying the range ... 445
Displaying the satellite map ... 445
Displaying the traffic map ... 436
Displaying weather information ... 446
Map data ... 444
Moving ... 441
Route overview after start ... 441
Selecting additional information ... 442
Selecting POI symbols ... 441
Setting the map scale ... 440
Setting the map scale automatically ... 445
Updating ... 31, 443

Map functions ... 440

Massage programs ... 171, 172

Maximum full-stop braking ... 275

Maximum load rating ... 559

Maximum permissible load
Calculation example ... 555
Determining ... 554

Maximum tire pressure 559
MBUX
Dashcam 451
MBUX Interior Assistant
Camera & parking 394
Driver camera 394
Information on fastening the child seat ... 392
Lasers and laser classification 389
Opening/closing the roller sunblind on the rear window 393
Overview 389
Preselection outside mirrors 393
Reading light 392
Search light 392
Selecting settings 394
MBUX multimedia system
Activating and starting routines 376
Adjusting the volume 386
Air conditioning menu 223
Authorization 397
Calling up the zero layer 373
Creating routines 376
Display settings 396
Drive programs 250
ENERGIZING seat kinetics 409
Factory setting 404
Home screen 375
Language settings 360
MBUX Interior Assistant 389
Memory Park Assist 346
Mercedes me & Apps 19, 474
Operating the zero layer 373
Overview 367
Personalized routines 375
Selecting routines 377
Set collision detection 271
Setting route-based speed adaptation 292
Snow chain mode 546
Starting the ENERGIZING COMFORT program 411
Steering wheel heater / seat heating 176
Switching the sound on/off 385
Touchscreen 378
Zero layer 370
MBUX reading light 392
MBUX search light 392
MBUX Voice Assistant
Function 360
Language setting 361
Media voice commands 364
Online voice commands 365
Online voice control 362
Operable functions 361
Operating safety 360
Setting 361
Speech quality 362
Voice commands 363
Voice prompting 360
Mechanical key
Inserting/removing 130
Media
General information 18
Media mode
Adding a favorite song 490
Connecting Bluetooth® audio equipment 489
Connecting USB mass storage devices ... 488
Controlling media playback 489
Copyright and trademarks 486
Information 490
Notes about the search function in categories 490
Overview of the media menu 487
Playing back similar music tracks 490
Removing a favorite song 490

Starting a search in categories..... 490
Starting and operating playback..... 491
Starting media playback..... 489
Supported formats and data storage media..... 485
Surprise mix..... 490
Using the keyword search..... 490
Medical aids..... 87
Memory function
Head-up display..... 178
Outside mirrors..... 178
Seat..... 178
Steering wheel..... 178
Memory Parking Assist
Exiting a parking space..... 345
Function..... 343
Parking..... 344
Recording..... 343
Setting..... 346
Menus (driver display)
Service..... 353
Menus (driver's display), Steering-wheel buttons
Assistant display..... 354
Navigation..... 355
Notes..... 349
Operating..... 350
Sport..... 355
Mercedes me App
Activating on-demand features..... 81
Calling up services..... 475
Calling up your user account..... 474
Unlinking the user account..... 475
Mercedes me Apps..... 19, 474
Mercedes me calls
Arranging a service appointment..... 471
Calling the Mercedes-Benz customer center after automatic accident/ breakdown detection..... 470
Calls via the overhead control panel..... 469
Information..... 469
Mercedes-Benz customer center..... 470
Transferred data..... 471
Mercedes me connect
Accident/Breakdown Management..... 473
Information..... 472
Transferred data..... 474
Mercedes-Benz emergency call system, Emergency call
Automatic emergency call..... 478
Data transfer..... 479
Information..... 477
Manual emergency call..... 479
Overview..... 57, 477
Mercedes-Benz GenuineParts..... 79
Message memory..... 700
Messages, Short messages, Text messages
Calling a message sender..... 463
Deleting..... 463
Dictating..... 462
Forwarding..... 462
Overview..... 462
Read-aloud function..... 462
Reading..... 462
Replying..... 462
Sending..... 462
Setting the displayed text messages..... 462
Using a phone number or URL..... 463
Mirrors
Mirror folding function..... 218

Outside mirrors ... 216
Rearview mirror ... 217

Mobile phone
Authorizing, Remote Parking Assist ... 339
Canceling permission for Internet connection ... 483
Frequencies ... 577
Maximum transmission output ... 577
Notes on wireless charging ... 195
Smartphone integration ... 19
Telephone ... 19
Wireless charging (front) ... 196

Model type ... 690

Modification
Limited protection ... 107

MOExtended tires, Run-flat tires ... 522

Music online
Adding providers ... 491
Calling up ... 492
Calling up the settings ... 493
Requirements: ... 491
Search function ... 492

N

Navigation
Activating ... 415
Destination entry ... 32, 416
Displaying/hiding the menu ... 415
MBUX voice commands ... 363
Menu (driver display) ... 355
Overview ... 415
Updating the map data ... 31, 443

Navigation announcements
Activating/deactivating ... 433
Repeating ... 434
Switching audio fadeout on/off ... 434
To adjust the volume ... 434

Near-field communication (NFC)
Locking/unlocking the vehicle (Digital Vehicle Key) ... 136
Starting the vehicle (Digital Vehicle Key) ... 235

Neutral ... 252

Nodding off ... 280

Notes on breaking in a new vehicle ... 240

Notifications Center
Calling up a notification ... 384
Editing a notification ... 385
Message types ... 383
Overview ... 383
Selecting actions ... 384

O

Objects in the vehicle interior
Limited protection ... 107

Occupant presence reminder
Activating/deactivating ... 127
Function ... 127

Occupant safety
Air bag ... 110
Basic information ... 95
Child seat ... 112
Information on the child restraint system ... 101
Information on the correct seat position ... 96
Occupant presence reminder ... 127
Pets in the vehicle ... 107
PRE-SAFE® ... 103

On-board diagnostics interface ... 86

On-board electronics
Two-way radios ... 576
On-demand feature ... 81
Online services ... 92
Open Source Software ... 94
Opening the trunk lid using your foot
HANDS-FREE ACCESS ... 147
Opening/closing a door ... 266
Opening/closing a garage door ... 266
Operating fluids
Additives ... 694
Brake fluid ... 695
coolant ... 695
Engine oil ... 694
Fuel (gasoline) ... 693
Notes ... 691
Refrigerant (air conditioning system) ... 697
Windshield washer fluid ... 42, 696
Operating safety
48 V on-board electrical system ... 83
Operator's Manual digital ... 78
Outside mirrors
Automatic anti-glare mode ... 217
Automatic mirror folding function ... 218
Blind Spot Assist / Active Blind Spot Assist ... 311
Folding in/out ... 216
Memory function ... 178
Preselection MBUX ... 393
Setting ... 216
Warning lamp ... 311
Overhead control panel ... 72

P

Paddle shifters
Steering wheel paddle shifters ... 255
Paint code ... 690
Panel heating ... 173
Panic alarm, Alarm
Activating/deactivating ... 129
Park position
DIRECT SELECT lever ... 251
Parking
Active Parking Assist ... 329
PARKTRONIC ... 325
Parking Assist
Activating/deactivating ... 342
Active Parking Assist ... 329
Memory Parking Assist ... 343
PARKTRONIC ... 325
Remote Parking Assist ... 335
Parking Assist PARKTRONIC
Activating/deactivating ... 328
Adjusting warning tones ... 329
Function ... 325
Parking assistance systems
Active Parking Assist ... 329
Drive Away Assist ... 340
Maneuvering brake function ... 342
Memory Parking Assist ... 343
PARKTRONIC ... 325
Remote Parking Assist ... 335
Parking brake ... 268
Parking for an extended period ... 272
Parking lamps ... 199
Parking lights ... 199
Parking option
Displaying on the map ... 451
Selecting ... 450

Parking position
Exterior mirrors ... 217
Storing the front-passenger outside mirror using the memory button ... 56
Storing the position of the front-passenger outside mirror using reverse gear ... 218
Parking service
Displaying a parking option on the map ... 451
Selecting parking options ... 450
Parking space
Finding ... 449
PARKTRONIC ... 325
PASSENGER AIR BAG
Status display, front passenger air bag ... 100
Payload
Calculation example ... 555
Determining the maximum ... 554
Pedestrian protection ... 505
Permitted towing methods
Overview ... 534
Personalized routines
Activating and starting ... 376
Creating ... 376
Overview ... 375
Selecting ... 377
Pets in the vehicle ... 107
PIN protection
System PIN protection ... 400
POI
Selecting ... 418
POI symbols
Selecting ... 441
Post-collision brake ... 105
Power closing function
Door ... 141
Trunk lid ... 145
Power supply
Start/stop button ... 233
Switching on (start/stop button) ... 233
Power washer ... 513
Pre-entry climate control
activating/deactivating for departure time ... 229
At time of departure ... 228
For departure time ... 229
PRE-SAFE®, Anticipatory occupant protection
Function ... 103
PRE-SAFE® Sound ... 103
Reverting measures ... 103
PRE-SAFE® Impulse Side
Function ... 104
Inflating ... 105
PRE-SAFE® PLUS
Backing up measures ... 103
Function ... 103
Preventative occupant protection system ... 103
Previous destinations
Selecting ... 418
Programs ... 248
Protection
Limited ... 107
Protection against collision
Maneuvering brake function ... 342
Protection of the environment
Driving style ... 79
Pulling away
Drive Away Assist ... 340
Hill Start Assist ... 278

Optimized acceleration..... 240
Purchasing a data package..... 480

Q

QR code rescue card..... 49, 89
Qualified specialist workshop..... 87

R

Radar and ultrasonic sensors..... 272
Radio
Activating..... 493
Activating/deactivating radio text..... 495
Calling up the station list..... 494
Deleting stations..... 495
Direct frequency entry..... 33, 494
Displaying radio text..... 495
Editing station presets..... 495
Managing favorites..... 495
MBUX voice commands..... 364
Menu..... 17
Moving stations..... 495
Overview..... 493
Setting a channel..... 494
Setting the frequency band..... 494
Showing/hiding lyrics..... 495
Station search..... 33, 494
Station suggestion..... 494
Storing radio stations..... 495
Radio regulations
Regulatory radio identification..... 578
Rain closing function
Sliding sunroof..... 156
Rain sensor
Sliding sunroof..... 156
Windshield wipers..... 213
Reading lamp
Interior lighting..... 210
Rear axle steering..... 245
Rear door (child safety lock)
Securing..... 124
Rear fog light..... 200
Rear passenger compartment climate control..... 225
Rear passenger compartment seat belt
Status display..... 99
Rear view camera
360° Camera..... 319
Function..... 319
Opening the camera cover..... 325
Rear window
Roller sunblind..... 158
Rear window heating..... 219
Rearview mirror
Automatic anti-glare mode..... 217
Rearward-facing child seat
Information..... 118
Recordings
Camera app..... 501
Reflective safety vest..... 29, 47, 520
Refrigerant..... 697
Refueling
Fuel..... 20, 257
Refueling the vehicle..... 20, 257
Registration
Toll system..... 448
Regulatory radio information
Specific absorption rate..... 688
Remote Online
Charging the starter battery..... 238

Cooling/heating the vehicle interior..... 238
Starting the vehicle..... 238

Remote Parking Assist
Authorizing a mobile phone..... 339
Function..... 335
Operating..... 336

Replacement key..... 132

Reporting safety defects..... 88

Reserve
Fuel..... 694

Resetting
MBUX reset function..... 404

Residual heat..... 226

Responsibility
Driving safety systems..... 272

Restraint system
Basic information..... 95
Basic instructions for children..... 112
Deployment situations..... 105
Functionality..... 98
Information on function..... 106
Information on the correct seat position... 96
Limited protection..... 107
Malfunction..... 98
Protection..... 96
Self-test..... 98
Warning lamp..... 98

Reverse gear
DIRECT SELECT lever..... 251

Roadside Assistance (breakdown)..... 82

Roll away protection..... 277

Roller sunblind
Opening/closing on the rear window (MBUX Interior Assistant)..... 393
Rear window..... 158
Side windows..... 157
Sliding sunroof..... 153

Roof luggage rack
Loading..... 33, 190
Securing..... 33, 190

Route
Adjusting on the map..... 428
Alternative route..... 422, 427
Calculating..... 422
Calculating alternative routes..... 423
Commuter route..... 422, 428
Displaying destination information..... 425
Displaying the route list..... 427
Editing a stored route..... 429
Navigation..... 415
Planning..... 426
Recording..... 430
Saving a recorded route..... 430
Selecting a type..... 423
Selecting notifications..... 424
Selecting options..... 424
Starting a saved route..... 429
Starting the automatic service station search..... 429
Switching the automatic gas station search on/off..... 429

Route guidance
Canceling..... 434
Changing direction..... 431
Destination reached..... 433
Freeway information..... 433
Lane recommendations..... 432
Notes..... 430
Off-road..... 434

Route guidance with augmented reality
Activating..... 440

Activating/deactivating the traffic light view ... 310
Displaying road names/house numbers ... 440
Overview ... 439

Route-based speed adaptation
Function ... 290
Setting ... 292

Run-flat characteristics ... 522

S

Safety system ... 273

Satellite map ... 445

Satellite radio
Activating/deactivating TuneStart ... 498
Adding a channel to Smart Favorites ... 498
Deleting a channel ... 496
Displaying service information ... 498
Information ... 495
Information about Smart Favorites and TuneStart ... 497
Moving a channel ... 496
Music and sport alerts function ... 497
Overview ... 496
Restrictions ... 496
Selecting a category ... 496
Selecting a channel ... 496
Setting music and sport alerts ... 497
Setting the parental control ... 497
Storing a channel ... 496
Switching on ... 496

Saving a destination suggestion as a favorite ... 435

Seat, Through-loading feature
Adjusting (Seat Comfort) ... 163
Adjusting electrically ... 165
Automatic adjustment ... 171
Configuring settings ... 170
Correct driver's seat position ... 162
ENERGIZING seat kinetics ... 409
Folding back the backrest (rear passenger compartment) ... 37, 186
Folding backrest forward (rear) ... 35, 184
Locking the backrest (rear passenger compartment) ... 187
Lumbar support ... 167
Massage programs ... 171
Memory function ... 178
Panel heating ... 173
Resetting settings (massage programs) ... 172
Settings ... 74
Side impact air bag ... 110
Workout programs ... 171

Seat belt
Automatic tightening ... 104
Rear passenger compartment seat belt status display ... 99
Warning lamp ... 99

Seat belt adjustment
Activating/deactivating ... 104
Function ... 104

Seat belt warning ... 99

Seat belts
Activating/deactivating seat belt adjustment ... 104
Care ... 517
Fastening ... 98
Notes on wearing correctly ... 97
Releasing ... 110
To adjust the height ... 98

Seat heating
Activating/deactivating ... 172

Seat height ... 165

Seat kinetics
Setting ... 409
Seat ventilation
Activating/deactivating ... 173
Selecting a gear ... 255
Selecting the sound profile
Burmester® 4D surround sound system ... 500
Selector lever ... 251
Self-test
Automatic front passenger air bag shutoff ... 100
Restraint system ... 98
Sensors
Cleaning ... 516
Information ... 272
Service
Menu (driver display) ... 353
Service center ... 87
Service due date ... 503
Service interval display ... 503
Service station search
Starting automatic search ... 429
Setting the date format ... 396
Setting the distance unit ... 400
Settings
Information ... 20
Shifting
Automatic transmission ... 255
Gearshift recommendation ... 256
Manual ... 255
Steering wheel paddle shifters ... 255
Shortening the braking distance
Brake Assist System ... 275
Side impact air bag ... 110
Side windows
Child safety lock (rear passenger compartment) ... 125
Closing with SmartKey ... 152
Convenience closing feature ... 152
Convenience opening ... 152
Opening with the SmartKey ... 152
Opening/closing ... 150
Problem ... 153
Roller sunblind ... 157
Size designation
Tires ... 560
Skid chains ... 41, 546
Sliding sunroof, Panorama roof with power tilt/sliding panel
Automatic functions ... 156
Closing with SmartKey ... 152
Opening with the SmartKey ... 152
Opening/closing ... 153
Problem ... 156
Rain closing function ... 156
SmartKey
Acoustic locking verification signal ... 129
Battery ... 130
Deactivating a function ... 57, 129
Function ... 128
Key ring attachment ... 130
Mechanical key ... 130
Panic alarm ... 129
Power consumption ... 57, 129
Unlocking setting ... 129
Smartphone integration
Apple CarPlay®/Android Auto ... 19
Snow chain mode ... 546

Snow chains 41, 546
Socket
12 V (front passenger footwell) 194
SOS button 469
Sound
PRE-SAFE® Sound 103
Wheels/tires 545
Sound settings
Adjusting treble, mid-range and bass settings 498
Calling up the sound menu 498
Information 498
Setting the balance and fader 499
Spare parts 79
Spare wheel, Emergency spare wheel 574
Special seat belt retractor 120
Specialist workshop 87
Specific absorption rate (SAR) 688
Speed
Save, cruise control 287
Save, DISTRONIC 287
Speed adaptation, Route-based 290
Speed control
Active Distance Assist DISTRONIC 284
Cruise control 282
Speed rating
Tires 560
Start-off assist
Drive Away Assist 340
Hill Start Assist 278
Optimized acceleration 240
Start/stop button
Parking the vehicle 260
Starting the vehicle 234
Switching on the power supply / vehicle 233
Start/stop function 245
Starter battery
charging, Remote Online 238
Starting
Remote Online 238
Start/stop button 234
Starting assistance 49, 532
Starting the engine
Emergency operation mode 237
Remote Online 238
Start/stop button 234
Starting-off aid
Drive Away Assist 340
Hill Start Assist 278
Optimized acceleration 240
Station
Deleting 495
Direct frequency entry 33, 494
Managing favorites 495
Moving 495
Setting 494
Storing 495
Station list
Calling up 494
Station presets
Editing 495
Station search 33, 494
Station suggestion
Radio 494
Status display
Front passenger air bag 100
Rear passenger compartment seat belt 99

Steer Assist
Active Steering Assist ... 293
STEER CONTROL ... 276
STEER CONTROL ... 276
Steering
Rear axle steering ... 245
Steering wheel
Adjusting electrically ... 175
Driver's air bag ... 110
Manually adjusting ... 174
Memory function ... 178
Steering wheel adjustments ... 175
Steering wheel heating
Decoupling from the seat heating ... 176
Steering wheel paddle shifters ... 255
Stop and go
ECO start/stop function ... 246
Stopping
Parking the vehicle ... 260
Stowage areas ... 39, 182
Stowage space under the trunk floor ... 38, 190
Stowage spaces
Armrest (front) ... 39, 182
Center console (front) ... 39, 182
Door ... 39, 182
Glove box ... 39, 182
Streaming online music ... 492
Substances hazardous to health ... 83
Suggestions
Configuring ... 400
Deleting ... 401
Sulfur content ... 693
Suspension
AIRMATIC ... 317
Setting the suspension level (AIRMATIC) ... 318
Switch-off delay time
Exterior ... 210
Interior ... 212
Switching air-recirculation mode on/off ... 226
System PIN protection
Activating/deactivating ... 400
System settings
Activating/deactivating system PIN protection ... 400
MBUX reset function ... 404
Setting the distance unit ... 400
Setting the time zone ... 396
Setting the time/date format ... 396
Transmission of the vehicle position ... 397

T

Tank capacity
Fuel ... 694
Reserve ... 694
Tank filler cap / flap ... 20, 257
Technical data
Information ... 576
Radio frequencies ... 577
Radio regulations ... 578
Specific absorption rate (SAR) ... 688
Vehicle dimensions ... 698
Telediagnosis
Diagnostic data ... 504
Telediagnostics
Transferred data ... 505

Telemetry display 408

Telephone, Smartphone
- Activating functions during a call 458
- Authorizing a mobile phone, Remote Parking Assist 339
- Calls with several participants 458
- Changing a function 457
- Connecting a mobile phone 456
- Deleting a mobile phone 457
- Incoming call during an existing call 459
- Information 16, 455
- MBUX voice commands 364
- Mobile phone usage 455
- Notes 453
- Notes on wireless charging (mobile phone) 195
- Secure Simple Pairing 456
- Smartphone integration 19
- Switching between mobile phones 456
- Telephone menu overview 455
- Telephone operation 458
- Voice recognition 457
- Wirelessly charging a(mobile phone, front) 196

Television, Digital TV
- MBUX voice commands 364

Temperature
- Adjusting 219

Temperature and airflow
- Adjusting 222

Temperature grade 557

THERMOTRONIC
- Air conditioning control panel 219

Tie-down eyes 38, 188

Time
- Manual time setting 396
- Setting the time zone 396
- Setting the time/date format 396

TIN (Tire Identification Number) 558

Tire and Loading Information placard 553

Tire characteristics 560

Tire information table 553

Tire labeling
- Characteristics 560
- DOT, Tire Identification Number (TIN) 558
- Load index 560
- Load-bearing capacity 560
- Maximum tire load 559
- Maximum tire pressure 559
- Size designation 560
- Speed rating 560
- Temperature grade 557
- Tire Quality Grading 557
- Traction grade 557
- Tread wear grade 557

Tire pressure
- Checking 551
- Checking manually 23, 549
- Maximum 559
- Notes 547
- Restarting the tire pressure loss warning system 552
- Tire pressure loss warning system, function 552
- Tire pressure table 548
- TIREFIT kit 524

Tire pressure loss warning system
- Function 552
- Restarting 552

Tire pressure monitor
- Function 550

Tire pressure monitoring system
Restarting ... 551
Tire pressure table ... 548
Tire Quality Grading ... 557
Tire sealant ... 524
Tire tread ... 29, 40, 545
Tire-change tool ... 52, 568
Tire-change tool kit ... 52, 568
TIREFIT kit, Tire inflation compressor
Storage location ... 53, 523
Tires
Breakdown ... 51, 522
Characteristics ... 560
Checking ... 29, 40, 545
Checking the tire pressure manually ... 23, 549
Definitions ... 562
DOT, Tire Identification Number (TIN) ... 558
Installing ... 572
Labeling ... 557
Load index ... 560
Load-bearing capacity ... 560
Maximum pressure ... 559
Maximum tire load ... 559
MOExtended ... 522
Noise ... 545
Notes on installing ... 564
Removing ... 572
Removing/installing hub cap ... 569
Replacing ... 564, 568
Restarting the tire pressure loss warning system ... 552
Rotating ... 567
Selecting ... 564
Size designation ... 560
Snow chains ... 41, 546
Speed rating ... 560
Storing ... 568
Temperature grade ... 557
Tire and Loading Information placard ... 553
Tire pressure loss warning system, function ... 552
Tire pressure table ... 548
Tire Quality Grading ... 557
TIREFIT kit ... 524
Traction grade ... 557
Tread wear grade ... 557
Unusual handling characteristics ... 545
Toll system
Debiting toll fees ... 446
Registering and activating ... 448
Top Tether ... 122
Topographical compensation, Predictive headlamp range control ... 203
Torque (driver's display) ... 355
Touch Control
Driver's display ... 349
MBUX ... 377
Setting the sensitivity ... 378
Touch-sensitive controls ... 80
Touchscreen
Entering characters ... 388
Tow bar system
Towing away ... 347
Tow-away protection ... 160
Tow-starting ... 541
Towing
Towing methods ... 534
Towing eye
Storage location ... 540

Towing methods
Both axles on the ground 53, 535
Overview 534
Track Race 405
Traction grade 557
Traffic information
Car-to-X-Communication 438
Displaying the traffic map 436
Displaying traffic incidents 437
Information on Live Traffic Information ... 436
Overview 435
Traffic Jam Assistant 292
Traffic light view
Activating/deactivating 310
Information 310
Traffic light warning/display 306
Traffic Sign Assist
Function 306
Setting 310
Trailer drawbar, Pulling/towing 347
Transferred vehicle data
Android Auto 468
Apple CarPlay® 468
Transmission position display 251
Transmission positions
DIRECT SELECT lever 251
Transporting
Vehicle 537, 539
Tread wear grade 557
Trunk floor
Opening 38, 190
Trunk lid
Closing 145
Emergency release (from inside) 150
HANDS-FREE ACCESS 147
Limiter 150
Opening 144
Power closing function 145
Switching the separate locking feature on/off 149
TuneMix™
Creating a list 498
Turn signal indicator 200
Turn signals 200
TV
MBUX voice commands 364
Two-way radios
Frequencies 577
Installation 576
Transmission output 577

U

Unfastening 110
Units of measurement
Setting 400
Unlocking setting
Digital Vehicle Key 137
Updating software, System update, Update
Error message 403
Information 401
Performing 401
USB port
Rear passenger compartment 195
Storage compartments (front) 39, 182
USB port (multimedia system)
Connecting mass storage devices 488
User profiles, Personalization
Adding a user 380

Notes ... 379
Overview ... 379
Requirements for use ... 379
Selecting a user ... 382
Selecting options ... 381
Synchronizing ... 383
User-specific content ... 379

V

Valet Service Mode
Activating/deactivating ... 279
Function ... 278

Vehicle, Switching on the ignition
48 V on-board electrical system ... 83
Activating, Remote Online ... 238
Correct use ... 87
Data storage ... 89
Diagnostics connection ... 86
Emergency key ... 141
Information ... 19
KEYLESS-GO ... 139
Limited Warranty ... 89
lock automatically (MMS) ... 141
Locking/unlocking (Digital Vehicle Key) ... 136
Locking/unlocking (emergency key) ... 141
Locking/unlocking (from inside) ... 138
Lowering ... 573
Maintenance ... 82
Medical aids ... 87
Parking ... 260
Parking for an extended period ... 272
Problem notification ... 88
Pulling ... 347
QR code rescue card ... 49, 89
Raising ... 570
Set collision detection ... 271
Starting (Digital Vehicle Key) ... 235
Starting (start/stop button) ... 234
starting, emergency operation mode ... 237
Stopping ... 260
Switching off (start/stop button) ... 260
Switching on (start/stop button) ... 233
Towing away ... 534
Transporting ... 537, 539
Ventilating / comfort opening ... 152
Voice commands for MBUX voice assistant ... 365

Vehicle cameras ... 272

Vehicle data
Display, MBUX ... 250
Displaying, DYNAMIC SELECT ... 250
Transferring to Android Auto ... 468
Transferring to Apple CarPlay® ... 468
Turning circle ... 698
Vehicle height ... 698
Vehicle length ... 698
Vehicle width ... 698
Weights ... 698
Wheelbase ... 698

Vehicle dimensions ... 698

Vehicle emergency start ... 541

Vehicle identification number ... 690

Vehicle identification plate
Model type ... 690
Paint code ... 690
VIN ... 690

Vehicle interior
Cooling/heating (Remote Online) ... 238

Vehicle key ... 128

Vehicle level
AIRMATIC ... 317

Setting (AIRMATIC)..... 318
Vehicle location
Switching transmission on/off..... 397
Vehicle operation outside the USA or Canada..... 82
Vehicle position
Sharing with a contact..... 444
Storing..... 435
Vehicle sensors..... 272
Vehicle start
Emergency operation mode..... 237
Remote Online..... 238
Start/stop button..... 234
Vehicle tool kit
TIREFIT kit..... 53, 523
Towing eye..... 540
Ventilating..... 152
Ventilation..... 230
Vents
Air vents..... 230
Video recordings
Gallery app..... 475
VIN
Engine compartment..... 690
Identification plate..... 690
Seat..... 690
Vision
Defrosting windows..... 226
Voice assistant
Voice prompting..... 360
Voice recognition..... 457

W

Warning system..... 158
Warning triangle..... 31, 48, 521
Warning/indicator lamp
ABS warning lamp..... 791
Active Brake Assist warning lamp..... 794, 795
ATTENTION ASSIST warning lamp..... 793
Brakes warning lamp (Canada only)..... 790
BRAKE Brakes warning lamp (USA only)... 790
Brakes warning lamp (yellow) (Canada only)..... 789
Check Engine warning lamp..... 786
Coolant warning lamp (red)..... 784
Coolant warning lamp (yellow)..... 786
Distance warning lamp..... 794
Electric parking brake indicator lamp (red) (Canada only)..... 788
PARK Electric parking brake indicator lamp (red) (USA only)..... 788
Electric parking brake indicator lamp (yellow)..... 788
Electrical malfunction warning lamp..... 786
Engine operating temperature warning lamp..... 787
ESP® OFF warning lamp..... 793
ESP® warning lamp flashes..... 792
ESP® warning lamp lights up..... 792


Fuel reserve warning lamp flashes..... 787


Fuel reserve warning lamp lights up..... 787


Mercedes-Benz emergency call system warning lamp..... 796


Occupant presence reminder warning lamp (white)..... 781


Occupant presence reminder warning lamp (yellow)..... 781


Power steering warning lamp (red)..... 782


Power steering warning lamp (yellow)..... 782


RBS warning lamp (USA only)..... 789


Rear axle steering warning lamp (red)..... 783


Rear axle steering warning lamp (yellow)..... 783


Reduced warning lamp power..... 782


Restraint system warning lamp..... 780


Seat belt warning lamp flashes..... 780


Seat belt warning lamp lights up... 781


Suspension warning lamp (red).... 795

Suspension warning lamp (yellow)..... 795


Tire pressure monitoring system warning lamp flashes..... 796


Tire pressure monitoring system warning lamp lights up..... 797


Traffic Sign Assist warning lamp... 794

Warning/indicator lamps
Driver's display..... 778
PASSENGER AIR BAG..... 100

Washer fluid
Topping up..... 23, 43, 511
Windshield washer fluid..... 42, 696

Washing by hand..... 514

Water tank..... 512

Wear
Limited protection..... 107

Weather information..... 446

Weight information..... 690

what3words
Destination entry with a 3 word address..... 420

Wheel change
Installing a new wheel..... 572
Lowering the vehicle..... 573
Removing a wheel..... 572
Removing/installing hub caps..... 569

Wheel rotation..... 567

Wheels
Breakdown..... 51, 522
Care..... 516
Checking..... 29, 40, 545
Checking the tire pressure manually 23, 549
Definitions..... 562
DOT, Tire Identification Number (TIN)..... 558
Installing..... 572
Load index..... 560
Load-bearing capacity..... 560
Maximum tire load..... 559
Maximum tire pressure..... 559

MOExtended..... 522
Noise..... 545
Notes on installing..... 564
Removing..... 572
Removing/installing hub cap..... 569
Replacing..... 564, 568
Rotating..... 567
Selecting..... 564
Size designation..... 560
Snow chains..... 41, 546
Speed rating..... 560
Storing..... 568
Temperature grade..... 557
Tire and Loading Information placard..... 553
Tire characteristics..... 560
Tire labeling..... 557
Tire pressure..... 547
Tire pressure monitor..... 550
Tire Quality Grading..... 557
TIREFIT kit..... 524
Traction grade..... 557
Tread wear grade..... 557
Unusual handling characteristics..... 545

Wi-Fi
Activating/deactivating..... 398
Information on connection..... 398
Setting up a hotspot..... 398
Setting up an Internet connection..... 483

Window
Rear window..... 158
Roller sunblind..... 158

Window curtain air bag..... 110

Windows
Care..... 516
Convenience opening..... 152
De-icing..... 223
Opening with the SmartKey..... 152
Opening/closing..... 150
Opening/closing (air recirculation button)..... 55
Removing mist..... 226

Windshield
De-icing..... 223
Demisting..... 219

Windshield washer fluid..... 42, 696

Windshield washer system..... 23, 43, 511

Windshield wipers
Activating/deactivating..... 213
Replacing the wiper blades..... 24, 44, 213
Replacing the wiper blades (windshield)..... 24, 44, 213

Winter operation
Activating/deactivating snow chain mode..... 546
Snow chains..... 41, 546

Wiper blades
Care..... 516
Replacing (windshield)..... 24, 44, 213

Wipers..... 213

Wireless charging
Mobile phone (front)..... 196
Notes..... 195

Workout programs..... 171

Workshop..... 87

Z

Zero layer
Function..... 370
Overview..... 371

Publication details

Internet

Further information about Mercedes-Benz vehicles and about Mercedes-Benz AG can be found on the following websites:

https://www.mbusa.com (USA only)

https://www.mercedes-benz.ca (Canada only)

Documentation team

©Mercedes-Benz AG: Not to be reprinted, translated or otherwise reproduced, in whole or in part, without written permission from Mercedes-Benz AG.

Vehicle manufacturer

Mercedes-Benz AG

Mercedesstraße 120

70372 Stuttgart

Germany

As at 17.01.23

F214 0032 13

Digital – in the vehicle

Explore the Operator's Manual in the multimedia system under "Vehicle". Begin with Quick Start and discover highlights and useful tips.

Vehicle document wallet

This contains a physical copy of comprehensive information about operating your vehicle and about services and your vehicle's warranty.

Order no. F214 0032 13
Edition D-2024