

E-Class Saloon

Owner's Manual +

Mercedes-Benz

F214 0191 02

Did you know?

In order to meet all needs, your operator's manual is available to you in various formats.
In addition to this PDF, the following options are open to you:

Digital – in the vehicle
Discover the Owner's Manual in the multimedia system under Preferences. Begin with Quick Start and discover useful tips.

Digital – on the Internet
You can find the Owner's Manual on the Mercedes-Benz homepage https://om.mb4.me/WebOMs.

Printed in the vehicle
Here you will find printed information on operating your vehicle. Depending on the country, additional printed information may be included.

Digital – as an App
The Owner's Manual is available free-of-charge from the common app stores.

Apple® iOS

Android™

Front passenger airbag warning



Observe the chapter "Children in the vehicle".

WARNING
Risk of injury or fatal injuries if the front passenger airbag is enabled

If the front passenger airbag is enabled, a child on the front passenger seat may be struck by the front passenger airbag during an accident.

- NEVER use a rearward facing child restraint system on a seat protected by an ACTIVE AIRBAG in front of it, DEATH or SERIOUS INJURY to the CHILD can occur.

Welcome to the world of Mercedes-Benz

Before your first drive, please read this Owner's Manual carefully and familiarise yourself with your vehicle. For your own safety and a longer operating lifespan for the vehicle, follow the instructions and warnings in this Owner's Manual. Failure to do so may lead to personal injury or damage to the vehicle.

THE EQUIPMENT FEATURES OR PRODUCT DESIGNATIONS OF YOUR VEHICLE MAY DIFFER FROM THE CONTENT DESCRIBED IN THE OWNER'S MANUAL. THE OWNER'S MANUAL DESCRIBES THE FOLLOWING CONTENT:

- The models and the standard and special equipment available at the time of this Owner's Manual going to press.
- The models and the standard and special equipment only available in certain countries.
- The models and the standard and special equipment which will only become available at a later date.

Please note that your vehicle may not be equipped with all features described. This is also the case for safety-relevant systems and functions. In individual cases, your vehicle may therefore differ from that shown in the descriptions and illustrations.

MERCEDES-BENZ KEEPS ADVANCING ITS VEHICLES CONSTANTLY AND THEREFORE RESERVES THE RIGHT TO INTRODUCE CHANGES IN THE FOLLOWING AREAS:

- Design
- Equipment
- Technical features

The latest and complete information about your vehicle and the description of any subsequently uploaded functions are contained in the Digital Owner's Manual in the multimedia system.

The illustrations in this Owner's Manual show a left-hand drive vehicle. For right-hand drive vehicles, the layout of vehicle parts and control elements differs accordingly.

The original purchase agreement for your vehicle includes a list of the equipment features in your vehicle at the time of delivery.

THE FOLLOWING DOCUMENTS ARE COMPONENTS OF THE VEHICLE:

- Digital Owner's Manual in the multimedia system
- Printed Owner's Manual
- Service booklet
- Supplementary manuals relating to specific equipment
- Supplementary documents

Keep these documents in the vehicle at all times. Ensure that all documents are in the vehicle or passed on in the event of sale or rental.

For questions concerning equipment and operation, please contact a Mercedes-Benz service centre.

F214 0191 02

Disclaimer
The following online version of the Owner's Manual describes all models as well as all standard and special equipment of your vehicle. Country-specific deviations are possible among the various languages. Note that your vehicle may not be fitted with all features described. This is also the case for safety-relevant systems and functions.

Please contact your authorised Mercedes-Benz dealer in order to receive a printed Owner's Manual for other vehicle models and vehicle model years. The Online Owner's Manual is the current version. Possible variations to your vehicle may not be taken into account as Mercedes-Benz constantly updates their vehicles and equipment to the state of the art and introduces changes in design and equipment.

Please also read the printed Owner's Manual, supplementary documents and the digital Owner's Manual in the vehicle.

COPYRIGHT

All Rights Reserved. All texts, images and graphics are subject to copyright law and other laws protecting intellectual property. They may not be copied for commercial purposes or for transmission, nor changed and used on other websites.

Contents

This interactive PDF works like a website – tap or click a button to jump straight to where you want to go.
You can return here at any time via the navigation bar at the top left.

- Symbols
- Quick start and Tips
- At a glance
- Digital Owner's Manual
- General notes
- Occupant safety
- Children in the vehicle
- Opening and closing
- Seats and stowing
- Light and sight
- Climate control
- Driving and parking
- Driver display
- MBUX Voice Assistant
- MBUX multimedia system
- Maintenance and care
- Breakdown assistance
- Wheels and tyres
- Technical data
- Display messages and warning/indicator lamps
- Index

Symbols

This interactive PDF works like a website – tap or click a button to jump straight to where you want to go.
You can return here at any time via the navigation bar at the top left.

In this Owner's Manual, you will find the following symbols:

WARNING
Danger due to not observing the warning notices

Warning notices draw your attention to hazards that may endanger your health or life, or the health or life of others.

► Observe the warning notices.

ENVIRONMENTAL NOTE
Environmental damage due to failure to observe environmental notes

Environmental notes include information on environmentally responsible behaviour or environmentally responsible disposal.

► Observe environmental notes.

NOTE
Damage to property due to failure to observe notes on material damage

Notes on material damage inform you of risks which may lead to your vehicle being damaged.

► Observe notes on material damage.

These symbols indicate useful instructions or further information that could be helpful to you.

►	Instruction
(→ page)	Further information on a topic
Display	Display in the central display
→	Highest menu level, which is to be selected in the multimedia system
»	Relevant submenus, which are to be selected in the multimedia system
*	Indicates a cause

Quick start and Tips

This interactive PDF works like a website – tap or click a button to jump straight to where you want to go.
You can return here at any time via the navigation bar at the top left.

Seats
Children in the vehicle
DIGITAL LIGHT
Touch-sensitive controls
Radio
Wi-Fi hotspot
Connecting a mobile phone
MBUX Interior Assistant
MBUX Voice Assistant
ENERGIZING Packages
Driving Assistance package
Parking Package
High-voltage battery AC charging (mode 2 or 3)
High-voltage battery direct current charging (mode 4)
Destination entry navigation
New multimedia system features
At the filling station
Preparing for a holiday
Luggage and loading
Ice and snow
Help in the event of a breakdown

Expert knowledge

Seats

Adjusting the seats

Adjusting the seats manually and electrically

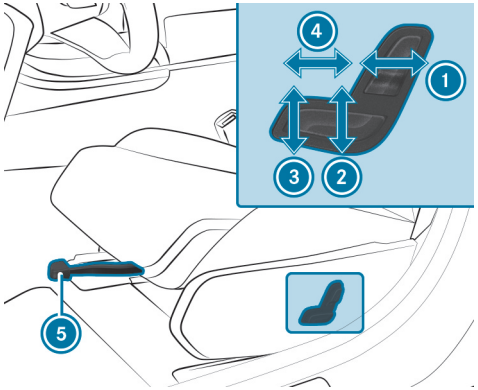

1. Seat backrest inclination
2. Seat height
3. Seat cushion inclination
4. Seat cushion length
5. Seat fore-and-aft position

- **To adjust the seat fore-and-aft position:** lift lever 5 and slide the seat into the desired position.
- Make sure that the seat is engaged.

Adjusting the seats electrically using the door control panel

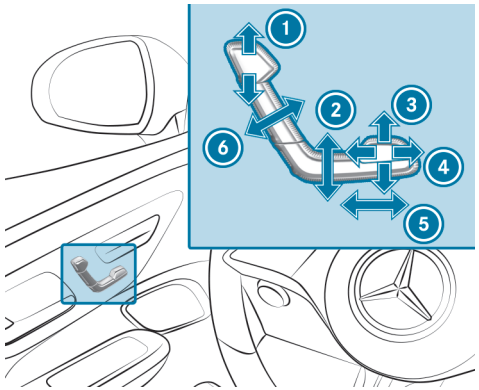

1. Head restraint height
2. Seat height
3. Seat cushion inclination
4. Seat cushion length
5. Seat fore-and-aft position
6. Seat backrest inclination

- Save the settings with the memory function (⟶ page 254).

Children in the vehicle

Safely transporting children in the vehicle

- When children are travelling in the vehicle, always observe the following (⟶ page 165)
- Important warning stickers (⟶ page 166)
- Recommended child restraint systems (⟶ page 173)
- Suitable seats in the vehicle for fitting a child restraint system (⟶ page 163)
- Approval categories for child restraint systems (⟶ page 172)
- Suitability of seats for securing ISOFIX/LATCH child restraint systems (⟶ page 177)
  - Fitting the ISOFIX/LATCH child restraint system on the rear seat (⟶ page 182)
- Suitability of seats for securing i-Size child restraint systems (⟶ page 178).
  - Fitting the i-Size child restraint system on the rear seat (⟶ page 182)
- Securing a Top Tether belt (⟶ page 184)
- Suitability of seats for securing belted child restraint systems (⟶ page 178)
  - Notes on vehicles without automatic front passenger airbag deactivation (⟶ page 171)
  - Notes on rear-facing and front-facing child restraint systems on the front passenger seat (⟶ page 169)
  - Fastening the child restraint system with the seat belt (⟶ page 185)
- Automatic front passenger airbag deactivation (⟶ page 169)
- Child safety locks for the rear side windows (⟶ page 188)
- Child safety locks for the rear doors (⟶ page 186)

DIGITAL LIGHT

Adaptive functions of DIGITAL LIGHT

With this system, the headlamps adapt to the driving and weather situation. It also provides extended functions for improved illumination of the road.

THE SYSTEM COMPRISES THE FOLLOWING ADAPTIVE FUNCTIONS:

- Active headlamps (⟶ page 283)
- Cornering light (⟶ page 283)
- Motorway mode (⟶ page 283)
- Enhanced fog light function (⟶ page 284)
- Bad weather light (⟶ page 284)
- City lighting (⟶ page 284)
- Topographical compensation (⟶ page 284)

► **To activate or deactivate Digital Light:**

- Briefly press ⌂ on the multimedia system display.
- Select Settings.
- Select Lights.
- Select DIGITAL LIGHT.
- Activate or deactivate Dynamic low beam.

► **To activate or deactivate enhanced assistance functions:**

- Select Supporting projections.
- Activate or deactivate the desired projection.

The availability of the assistance functions is country-dependent.

Touch-sensitive controls

Overview of touch-sensitive controls

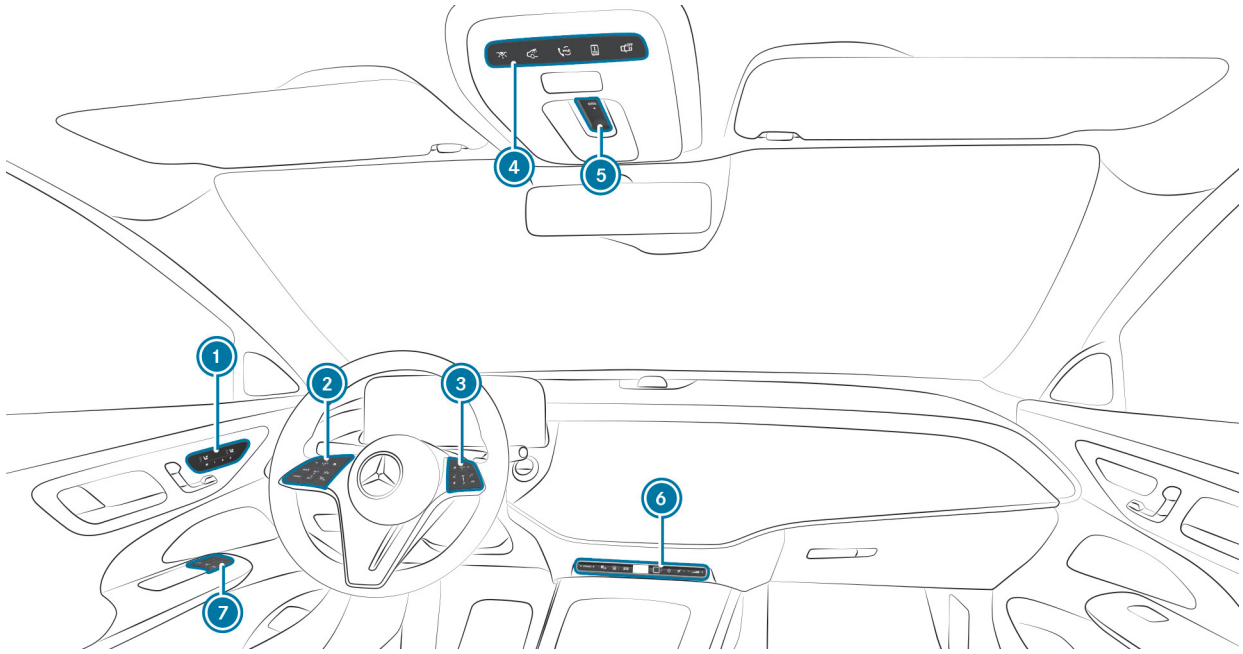

1. Control panel:
   - Switches the seat heating on/off
   - Switches the seat ventilation on/off
   - M Operates the memory function
2. Control panel:
   Driver's display
   - Active Distance Assist DISTRONIC and variable limiter
3. Control panel for the MBUX multimedia system
4. Control panel:
   - Switches the front interior lighting on/off
   - Switches the rear interior lighting on/off
   - me button
   - Opens/closes the panorama sliding sunroof rear roller sunblind

Switches automatic interior lighting control on/off

5 Opens/closes the panorama sliding sunroof

Opens/closes the panorama sliding sunroof front roller sunblind

6 Control panel:

- DYNAMIC SELECT
- Active Parking Assist
- Switches the stationary heater on/off
- Quick vehicle access
- Fingerprint sensor
- Switches the MBUX multimedia system on/off
- Switches sound on/off
- Adjusts the volume

7 Operates the outside mirrors

► Observe the notes on the touch-sensitive controls (→ page 113).

Radio

Operating radio

► **To switch to radio:**
- Briefly press [⌂] in the multimedia system display.
- Tap on [♪].

► **To set the frequency band:**
- Briefly press [⌂] in the multimedia system display.
- Tap on [♪].
- Select a frequency band or a favourite.

► **To set a radio station:**
- Briefly press [⌂] in the multimedia system display.
- Tap on [♪].
- Swipe to the left or right on the control element or select a radio station.

► **To call up the radio station list:**
- Briefly press [⌂] in the multimedia system display.
- Tap on [♪].
- Select [☰♪].

► **To search for radio stations using station names or frequency entry:**
- Briefly press [⌂] in the multimedia system display.
- Tap on [♪].
- Select [🔍].
- Enter a station name or frequency.
- Select a station.

► **To store radio stations:**
- Briefly press [⌂] in the multimedia system display.
- Tap on [♪].
- Select [☆].

► **To set the traffic information service volume increase:**
- Briefly press [⌂] in the multimedia system display.
- Tap on [⚙].
- Select System.
- Select Audio.
- Select Navigation & traffic announcements.
- Set a value for Traffic announc. vol. increase.

Wi-Fi hotspot

Setting up a Wi-Fi hotspot

GENERALLY, TWO TYPES OF WI-FI CONNECTION ARE AVAILABLE:

- Using the multimedia system as a Wi-Fi hotspot

  The multimedia system serves as a Wi-Fi hotspot for mobile communication devices such as a smartphone or tablet PC.

  The data volume of the vehicle or an already connected tethering device is used for the data connection.

  Data volume must be purchased for a fee via the Mercedes-Benz Portal.

  The use of the vehicle data tariff by external devices is not available in all countries.
- Using a mobile communication device as a Wi-Fi hotspot (tethering)

  An external Wi-Fi hotspot is accessed for the Internet connection of the multimedia system.

  The data tariff of the mobile communication device via Data package is used for the data connection.

OPTIONS FOR SETTING UP A CONNECTION:

- QR code

  The connection is set up by scanning the QR code shown on the multimedia system.
- Security key

  The connection is established by entering the security key displayed on the multimedia system.

Connecting a mobile phone

Connecting a mobile phone

▶ **To activate Bluetooth®:**

- Make sure that the mobile phone Bluetooth® is switched on.
- Tap [⌂] on the central display.
- Select Settings.
- Select System.
- Select Internet and Bluetooth.
- Activate Bluetooth®.

▶ **To search for a mobile phone:**

- Tap [⌂] on the central display.
- Select Phone.
- Select [⚙].
- Select Devices.
- Select Devices.
- Select Connect new device.

▶ **To authorise a mobile phone:**

- Select a mobile phone.

A code is displayed in the multimedia system and on the mobile phone.

▶ If the codes match, confirm the code on the mobile phone.

MBUX Interior Assistant

Using the MBUX Interior Assistant

The MBUX Interior Assistant detects the front vehicle occupants via 3D laser cameras in the overhead control panel. The Assistant interprets natural hand, head and body movements contextually or upon explicit request from the driver or front passenger. The Assistant can thus automatically trigger vehicle interior functions and assist appropriately to the situation.

The Assistant recognises driver and front passenger interactions.

THE ASSISTANT SUPPORTS VEHICLE AND INFOTAINMENT FUNCTIONS AT THREE INTERACTION LEVELS:

- INTELLIGENT
  The Assistant recognises vehicle occupants and objects automatically and activates functions.
- REACTIVE
  The Assistant recognises the natural body language of a vehicle occupant and carries out functions automatically, appropriate to the situation.
- CONTACTLESS
  The vehicle occupant actively requests a function using a hand movement.

THE ASSISTANT OFFERS FUNCTIONS FOR THE FOLLOWING:

- SAFETY
  The Assistant supports vehicle occupants with the use of restraint systems.
- COMFORT
  The Assistant enhances comfort by automating functions inside the vehicle and supporting natural interaction with the vehicle.
- INFOTAINMENT
  The Assistant facilitates operation of the Infotainment functions.

One application example is switching the reading light on or off.



Carrying out operation of the reading light for the driver and front passenger

► Move your hand up and down under the inside mirror.
The reading light is switched on or off.

MBUX Voice Assistant

Operating the MBUX Voice Assistant

YOU CAN USE THE MBUX VOICE ASSISTANT TO OPERATE THE FOLLOWING FUNCTIONS DEPENDING ON THE VEHICLE EQUIPMENT:

- Telephone
- Text message and e-mail
- Navigation
- Radio and media
- Vehicle functions
- Online functions

EXAMPLES OF POSSIBLE VOICE COMMANDS:

- To operate the phone: Call my father.
- To manage e-mails: Show me my new e-mails.
- To operate the navigation: Search for an Asian restaurant, but not Japanese, in South London.
- To operate the radio: Which station am I currently listening to?
- To operate media: Play a similar track.
- To operate climate control: My feet are cold.
- To operate vehicle functions: Open the window.
- To call up the weather: Will it be sunny tomorrow?
- To ask a general knowledge question: Who painted the picture "The Scream"?

ENERGIZING Packages

Operating ENERGIZING COMFORT

- **To start an ENERGIZING programme:**
  - Briefly press [⌂] in the multimedia system display.
  - Select Comfort.
  - Select ENERGIZING COMFORT.
  - Select a programme and start with [▶].
- **To configure an ENERGIZING programme:**
  - Select a programme.
  - Select Settings.
  - Switch the functions included in the programme on or off.
- **To start Power Nap:**
  - Select Power Nap.
  - Select [▶] for the desired seat.
- **To start a training programme:**
  - Select Training.
  - Select a programme and start with [▶].
  - To activate fragrancing for training, select Air freshener.
- **To start Tips:**
  - Select Tips.
  - Select an area of the body and start with [▶].

Driving Assistance package

Driving Assistance Package functions

Depending on availability for the respective country of use, the vehicle may be equipped with various functions which are provided to assist the driver. The vehicle is therefore fitted with cameras and sensors to monitor the vehicle surroundings.

- **Active Distance Assist DISTRONIC** (⟶ page 429)

You can watch an animation on this topic via the following link:

- **Active Speed Limit Assist** (⟶ page 436)

You can watch an animation on this topic via the following link:

- **Route-based speed adaptation** (⟶ page 437)
- **Active Brake Assist** (⟶ page 448)

You can watch an animation on this topic via the following link:

- **Active Steering Assist** (⟶ page 439)

You can watch an animation on this topic via the following link:

- **Active Emergency Stop Assist** (⟶ page 441)
- **Active Lane Change Assist** (⟶ page 443)

You can watch an animation on this topic via the following link:

- **Active Stop-and-Go Assist** (⟶ page 438)
- **Blind Spot Assist with exit warning** (⟶ page 459)
- **Active Blind Spot Assist with exit warning** (⟶ page 461)

You can watch an animation on this topic via the following link:

- **Active Lane Keeping Assist** (⟶ page 463)

Parking Package

Functions of the Parking Package

Depending on availability for the respective country of use, the vehicle may be equipped with various functions which are provided to assist the driver with parking and manoeuvring. The vehicle is therefore fitted with cameras and sensors to monitor the vehicle surroundings.

Depending on the equipment version, the following systems and functions are part of your Parking Package:

- **Reversing camera:** monitors the area behind the vehicle and relays an image of this area on the driver display (⟶ page 471).
- **360° camera:** a system comprising four cameras which record the immediate vehicle surroundings and relay an image to the driver display (⟶ page 473).
- **Parking Assist PARKTRONIC:** an electronic parking assistance system which monitors the area surrounding your vehicle and the distance to obstacles in the vicinity using ultrasound (⟶ page 478).
- **Active Parking Assist:** an electronic parking assistance system which assists you when parking or exiting a parking space by changing gear, accelerating, braking and steering the vehicle (⟶ page 482).

You can watch an animation on this topic via the following link:

- **Remote Parking Assist:** can park your vehicle and exit a parking space while you are outside your vehicle (⟶ page 488).

You can watch an animation on this topic via the following link:

- **Memory Parking Assist:** can park your vehicle in, or exit a previously recorded and stored parking space (⟶ page 496).

You can watch an animation on this topic via the following link:

- **Trailer Manoeuvring Assist:** Trailer Manoeuvring Assist assists you when reversing with a trailer. The reversing camera monitors the articulation angle between the vehicle and the trailer and adjusts it to a specified value. Trailer Manoeuvring Assist also limits your speed (⟶ page 500).

High-voltage battery AC charging (mode 2 or 3)

AC charging (mode 2 or 3)

Starting and ending the charging process

- More notes on charging the high-voltage battery (⟶ page 375)
- Overview of the charging cable control panel (⟶ page 383)

High-voltage battery direct current charging (mode 4)

DC charging (mode 4)

Starting and ending the charging process

- More notes on charging the high-voltage battery (→ page 375)
- Overview of the charging cable control panel (→ page 383)

Destination entry navigation

Entering a navigation destination

► Briefly press [⌂] in the multimedia system display.

The zero layer is shown.

The zero layer is your own personalised user interface with the digital map in the foreground and the applications that you use the most. You can switch between the zero layer and the home screen with a classic menu.

► Select [🔍].

SELECT THE FOLLOWING OPTIONS FOR DESTINATION ENTRY:

- Enter a POI, an address or a three-word address in the input line.

  Online search results for POIs (if available) may contain additional information, for example opening times and prices. The information is provided by an online map service.

  You can find further information about three-word addresses at: http://what3words.com
- Select a destination suggestion.

  Requirements:

  The Navigation option is switched on in the user settings for Suggestions.

  The multimedia system has gathered sufficient data in order to show destination suggestions.
- Select Previous destinations.

  Select a previous destination.

  You can save the destination as a favourite.
- Select POIs.

  Select a POI category, e.g. [P] or enter a POI name or POI category in the input line.

  If search results are displayed, limit them with Filter, for example by search position or the desired travel time.
- Select Contacts.

  Requirements:

  A mobile phone is connected to the multimedia system and contacts have been downloaded.

  The contact contains a navigable address.
- Enter the geocoordinates as latitude and longitude in the input line.

  Example 1: 47°58'11"N 7°57'25"E (degrees, minutes, seconds and compass direction)

  Example 2: 47.969722 7.956944 (decimal degrees)
- Select a destination on the map.
- Select Favourites.

  Requirements:

  The destinations have been saved as favourites.
- Select Received destinations.

  Requirements:

  There is an Internet connection for receiving external destinations.

  The destinations have been sent to the vehicle.

New multimedia system features

Information about the telephone menu



1. Bluetooth® device name of the currently connected mobile phone/of the mobile phone
2. Bluetooth® device name of the currently connected mobile phone/of the mobile phone (two phone mode)
3. Signal strength of the mobile phone network
4. Battery status of the connected mobile phone
5. Options
6. Messages
7. Calls up my devices
8. Numerical pad
9. Starts contact search

TELEPHONE MENU OVERVIEW

Via the telephone menu you can use the functions in connection with your mobile phone.

THE FOLLOWING FUNCTIONS CAN BE USED:

- Call lists
- Contacts
- Messages
- Device manager

USING CALL LISTS

If your mobile phone supports the PBAP Bluetooth® profile, the call lists from the mobile phone are displayed in the multimedia system.

THE FOLLOWING FUNCTIONS ARE AVAILABLE:

- Making calls from the call list
- Opening contacts on the call list

MESSAGES

In the message menu you can receive text messages and create and send them with the help of the MBUX voice assistant. In addition, you can conveniently use the read-aloud function during the journey.

DEVICE MANAGER

In the device manager, you can connect your mobile phone with the multimedia system.

You have the option of using your mobile phone alone in single telephone mode or together with another mobile phone in two phone mode.

USING CONTACTS
If you permit the multimedia system to access the contacts in your mobile phone, you can use these in the vehicle. You can store up to 8,000 contacts.

THE FOLLOWING OPTIONS ARE AVAILABLE TO YOU VIA THE CONTACTS MENU:

- Making telephone calls (calling a contact)
- Navigation
- Composing messages with the help of the MBUX voice assistant
- Additional options

The contacts from your mobile phone can be downloaded automatically or manually.

CONDUCTING A CALL
When conducting a call, additional functions are available apart from making, accepting or rejecting a call. For example, you can switch between calls, conduct a call with several participants or conference calls.

It is also possible to accept or reject waiting calls. If you receive a call while already in a call, a message is displayed.

DURING A CALL YOU CAN ACTIVATE THE FOLLOWING FUNCTIONS:

- Microphone off
- Fade in the numerical pad to send DTMF tones
- Add a call
- Hands-free mode to transfer the call to the front or rear passenger compartment
- Privacy mode to transfer the call to the telephone or headphones

Information on radio

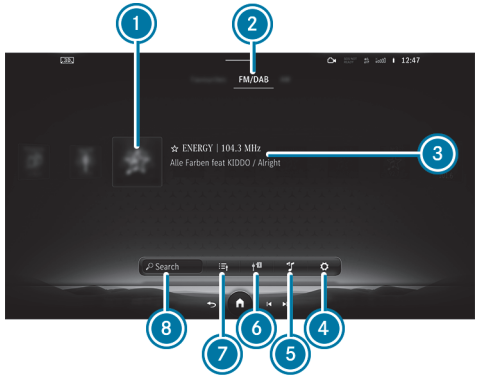

1. Preview image
2. Active frequency band
3. Station name or set frequency
4. Settings
5. Sound settings
6. Switches on traffic reports
   With DAB equipment: switches on radio announcements
7. Station list
8. Search

Using the radio menu you can play a multitude of radio stations and use the Internet Radio TuneIn. Search for your preferred stations and save these as favourites or in station lists.

ⓘ The function of TuneIn Internet radio is country-dependent.

Radio text: this function shows you the station name, the track and the artist for the song currently playing, for example.

DAB: with the DAB function, graphically formatted additional information about a station can be shown, e.g. logos, album covers, music tracks, programmes, news or also service information.

Traffic announcements: Traffic messages can be displayed by pressing TA.

Information on media

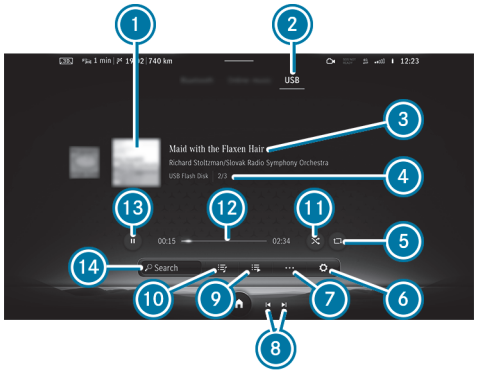

1. Album cover
2. Active media source
3. Track and artist
4. Active data storage medium and current track number/track in playback list
5. Repeat
6. Settings
7. Additional options
8. Previous or next track and fast rewind or fast forward
9. Additional categories
10. Playlists and categories
11. Random playback
12. Timeline
13. Controls playback
14. Media search

Using the Media application you can set and use the audio functions of your multimedia system, for example. You can listen to music, for example.

USB: using the USB menu, you can play back your own audio data from a data storage medium connected by USB, for example.

Bluetooth®: Using the Bluetooth menu, you can connect a Bluetooth® audio device with the multimedia system and play back the available tracks on the audio device. Connecting the device can be conveniently handled in the device manager, so you can complete all settings with just a few clicks.

Online music: The Online music menu allows you to access music streaming services.

Notes on comfort

The Comfort menu makes functions available that contribute to your well-being when driving or taking a break.

SEAT COMFORT

The Seat menu allows you to flexibly adjust the contours of the seats to your needs by adjusting the side bolsters and lumbar support independently. You can save these settings in your Mercedes me profile, so they can be called up each time you drive. With the Seat kinetics function, you can start a programme that causes slight modifications of the seat position when you are driving. These modifications promote a healthy back.

MASSAGE PROGRAMME
In the Massage menu you will find the massage programmes that are available for your vehicle. By selecting the desired programme you start it directly and it runs for a period of approximately ten minutes, depending on the programme selected. With the High intensity function you can increase the effect of the massage programme.

AMBIENT LIGHT
In the Ambient light menu you can set the colour and brightness for your ambient lighting. Using the Link zones function, the ambience, accent and impression zones can be regulated separately so that you can set the lighting of your vehicle individually.

Information about smartphone integration

Using the Smartphone Integration menu, various applications are available that can bring the functions of your mobile phone to the multimedia system display. Operation can by carried out via the touchscreen or voice control, for example.

Only one mobile phone at a time can be connected via Smartphone Integration to the multimedia system. Also for use with two phone mode with Smartphone Integration, only one additional mobile phone can be connected using Bluetooth® with the multimedia system.

Use Android Auto for mobile phones with the Android operating system and use Apple CarPlay® with your iPhone®. The full functionality of Android Auto and Apple CarPlay® is only possible with an Internet connection.

Information on AMG Performance

Using the AMG Performance menu, you can call up information about the performance of your vehicle.

DEPENDING ON THE VEHICLE THE FOLLOWING MENUS ARE AVAILABLE:

- Energy flow
  Visualisation of the energy flow in the vehicle
- Consumption
  Display of the current and average consumption values of the vehicle
- Vehicle
  Display of vehicle data
- Engine
  Display of engine data such as current power and torque
- Drive
  Display of current data of various drive elements such as current, voltage and temperature

Information about vehicle info

You can have important vehicle information displayed in the Info menu. At a glance you will have an overview of vehicle and engine data or current consumption values, for example. In addition, you can call up the Digital Owner's Manual via the Owner's Manual menu item.

VEHICLE DATA

THE FOLLOWING DATA WILL BE SHOWN, FOR EXAMPLE:

- Activity of the acceleration and brake pedal
- Activity of the suspension strut
- Wheel angle
- G-force display for the linear and lateral acceleration

ENGINE DATA

THE FOLLOWING DATA IS SHOWN:

- Transmission oil temperature
- Engine/coolant temperature
- Performance
- Torque
- Boost pressure

CONSUMPTION DATA

Depending on your driving style, this display shows the current and average fuel consumption. Together with the displays of vehicle and engine data, you can adapt your driving style to be as efficient and economical as possible.

Information about In-Car Calendar

Using the In-Car Calendar menu, you can connect your online services with the multimedia system.

YOU THEN HAVE MULTIPLE OPTIONS AVAILABLE:

- Organising your meetings and telephone conferences.
- Managing your appointments.
- Have navigation to the location for a meeting.

Information on MB Apps (Digital Extras)

VARIOUS SERVICES AND ONLINE FUNCTIONS ARE AVAILABLE VIA THE MB APPS MENU:

- Managing Digital Extras
- Using the dashcam
- Using the web browser to surf the Internet

You require a Mercedes me ID user account, and have to connect your vehicle with the user account, in order to be able to use services.

ⓘ If the Mercedes-Benz App is available on a mobile phone, the vehicle link can be made via the displayed QR code.

Please not that the available features are country-dependent.

Information on settings

In the Settings you can set the basic configuration for your multimedia system and the vehicle. You have access to all functions in this menu, from switching the driver assistance systems on and off to display and language settings.

THE SETTINGS ARE STRUCTURED IN THE FOLLOWING MENUS:

- Assistance
- Vehicle
- Lights
- System

ASSISTANCE MENU

With the Assistance menu you have direct access to the driver assistance systems which are used in your vehicle and can either switch these on or off, or configure according to your wishes.

VEHICLE MENU

HERE YOU CAN ACTIVATE THE FOLLOWING FUNCTIONS, FOR EXAMPLE:

- Automatic folding in of the outside mirrors when parking the vehicle

- Automatic adjustment of the seat and steering wheel, for comfortable entry and exit from the vehicle
- Automatic activation of the 360° camera when selecting reverse gear

LIGHT MENU

All the light settings can be made in the Lights menu. You can activate or deactivate the Intelligent Light System here, set for how long your vehicle should remain lit after parking or unlocking or switch the function off.

SYSTEM MENU

All important settings for the multimedia system can be made in the System menu.

YOU CAN CARRY OUT THE FOLLOWING SETTINGS, FOR EXAMPLE:

- Setting the system language
- The configuration of Wi-Fi and Bluetooth®
- Setting of time and date

At the filling station

Refuelling the vehicle

WARNING
Risk of fire or explosion from fuel

Fuels are highly flammable.

- Fire, naked flames, smoking and creating sparks must be avoided.
- Before refuelling, switch off the vehicle and, if fitted, the stationary heater and keep switched off during filling.

WARNING
Risk of injury from fuels

Fuels are poisonous and hazardous to your health.

- Do not swallow fuel or let it come into contact with skin, eyes or clothing.
- Do not inhale fuel vapour.
- Keep children away from fuel.
- Keep doors and windows closed during the refuelling process.

If you or other people come into contact with fuel, observe the following:

- Immediately rinse fuel off your skin with soap and water.
- If fuel comes into contact with your eyes, immediately rinse them thoroughly with clean water. Seek medical attention immediately.
- If you swallow fuel, seek medical attention immediately. Do not induce vomiting.
- Change immediately out of clothing that has come into contact with fuel.

WARNING
Risk of fire and explosion due to electrostatic charge

Electrostatic charge can ignite fuel vapour.

- ► Before you open the fuel filler cap or take hold of the pump nozzle, touch the metallic vehicle body.
- ► To avoid creating another electrostatic charge, do not get into the vehicle again during the refuelling process.

WARNING
Risk of fire from fuel mixture

Vehicles with a diesel engine:

If you mix diesel fuel with petrol, the flash point of the fuel mixture is lower than that of pure diesel fuel.

While the vehicle is running, component parts in the exhaust system may overheat without warning.

- ► Never refuel using petrol.
- ► Never mix petrol with diesel fuel.

NOTE
Damage caused by the wrong fuel

Vehicles with a petrol engine:

Even small amounts of the wrong fuel could result in damage to the fuel system, the engine and the emission control system.

- ► Refuel only with unleaded, sulphur-free spark-ignition engine fuel.

Petrol can contain up to 25 Vol.-% ethanol by volume.

- ► See the information label in fuel filler flap for compatible fuels.

Further information about compatible fuels can be obtained at a qualified specialist workshop.

Throughout Europe you can also find the compatibility labels on the fuel pump or pump nozzle suitable for your vehicle.

NEVER REFUEL WITH ANY OF THE FOLLOWING FUELS:

- Diesel
- Regular petrol with an octane number lower than 91 RON
- Petrol with more than 3% methanol by volume, e.g. M15, M30
- Petrol with metallic additives

If you have accidentally refuelled with the wrong fuel:

- ► Do not switch on the vehicle.

- Consult a qualified specialist workshop.

NOTE
Damage caused by the wrong fuel

Vehicles with a diesel engine:

Even small amounts of the wrong fuel could result in damage to the fuel system, the engine and the emission control system.

Vehicles with diesel particulate filters:

- Refuel using only sulphur-free diesel fuel.
  In countries without sulphur-free diesel fuel, refuel using only low-sulphur diesel fuel with a sulphur content of less than 50 ppm.

Vehicles without diesel particulate filters:

- Refuel using only diesel fuel with a sulphur content of less than 500 ppm.

NEVER REFUEL WITH ANY OF THE FOLLOWING FUELS:

- Petrol
- Marine diesel
- Heating oil
- Pure fatty acid methyl ester or vegetable oil
- Paraffin or kerosene

If you have accidentally refuelled with the wrong fuel:

- Do not switch on the vehicle.

► Consult a qualified specialist workshop.

NOTE
Shorter maintenance intervals due to fuel with increased bio-contents

When fuels with increased bio-contents are used, fuel residues with increased separation volume may occur. If fuels with increased bio-contents (compatibility marks B10 and B20) are used on an ongoing basis, this may lead to shorter maintenance intervals for the fuel filter.

If the vehicle is not used for an extended period of time (several weeks):

► Refuel the vehicle beforehand with diesel fuel with bio-contents < 10% to avoid possible deposits of bio-contents in the fuel tank.

NOTE
Do not use diesel to refuel vehicles with a petrol engine

IF YOU HAVE ACCIDENTALLY REFUELLED WITH THE WRONG FUEL:

- Do not switch on the vehicle. Otherwise fuel can enter the engine.
  Even small amounts of the wrong fuel could result in damage to the fuel system and the engine. The repair costs are high.

► Consult a qualified specialist workshop.

► Have the fuel tank and fuel lines drained completely.

NOTE
Do not refuel diesel-engined vehicles with petrol

IF YOU HAVE ACCIDENTALLY REFUELLED WITH THE WRONG FUEL:

- Do not switch on the vehicle. Otherwise fuel can enter the engine.
  Even small amounts of the wrong fuel could result in damage to the fuel system and the engine. The repair costs are high.

► Consult a qualified specialist workshop.

► Have the fuel tank and fuel lines drained completely.

NOTE
Damage to the fuel system due to overfilling the fuel tank

► Only fill the fuel tank until the pump nozzle switches off.

If too much fuel has been added due, for example, to a faulty filling pump:

► Do not switch on the vehicle.

► Consult a qualified specialist workshop.

NOTE
Fuel may spray out when you remove the fuel pump nozzle

► Only fill the fuel tank until the pump nozzle switches off.

Requirements:

- The vehicle is unlocked.
- **Plug-in hybrid with petrol engine:** the fuel tank was vented before refuelling (⟶ page 371).

Observe the notes on operating fluids and fuel.

The recommended octane number for your vehicle can be found on the information label on the inside of the fuel filler flap.

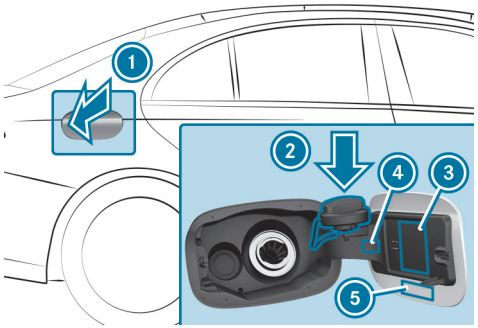

1. Fuel filler flap
2. Bracket for the fuel filler cap
3. Tyre pressure table
4. QR code for rescue card
5. Fuel type

ⓘ **Plug-in hybrid with petrol engine:** the fuel filler flap opens automatically after the fuel tank has been vented (⟶ page 371).

- Press on the centre rear of fuel filler flap 1.
- Turn the fuel filler cap counter-clockwise and remove it.
- Insert fuel filler cap from above into bracket 2.
- Completely insert the pump nozzle into the tank filler neck, hook in place and refuel.
- Only fill the fuel tank until the pump nozzle switches off.

ⓘ **Vehicles with diesel engine:** The tank filler neck is designed for refuelling at diesel filling pumps.
In order to prevent incorrect fuel from being filled, your vehicle is equipped with an incorrect fuelling protector. This function may be deactivated in some countries due to local conditions. For more information, consult a Mercedes-Benz Service Centre.

ⓘ **Vehicles with diesel engine:** Do not run the fuel tank empty.
When the fuel tank is completely empty, top up with at least 5 l diesel before starting the vehicle.

ⓘ **Vehicles with diesel engine:** Use a filler neck with a large diameter for vehicles with a diesel engine when topping up fuel from a canister. Otherwise, the filler neck cannot slide into the tank filler neck.

- Replace the fuel filler cap on the tank filler neck and turn clockwise until it engages audibly.
- Close fuel filler flap 1.

Topping up AdBlue®

NOTE
Engine damage due to AdBlue® being in the fuel

- AdBlue® must not be used to fill the fuel tank.
- Only use AdBlue® to fill the AdBlue® tank.
- Do not overfill the AdBlue® tank.

NOTE
Contamination of the vehicle interior due to AdBlue® leakage

- After topping up, carefully close the AdBlue® refill container.
- Avoid carrying AdBlue® refill containers permanently in the vehicle.

Requirements:

- The vehicle is unlocked.

THE FOLLOWING MESSAGES APPEAR IN ORDER ON THE DRIVER DISPLAY WHEN THE ADBLUE® TANK REQUIRES TOPPING UP:

- Refill AdBlue See Owner's Manual. The AdBlue® level has fallen below the reserve range. Top up with AdBlue® immediately.
- Top up AdBlue Emergency op. in XXX km See Owner's Manual. The low AdBlue® level will lead to limited performance after the remaining distance displayed has been driven. Top up with AdBlue® immediately.
- Top up AdBlue XX,X l Emerg. op.: max. XXX km/h Start not poss. in XXX km. The low AdBlue® level will lead to limited performance from the speed displayed. After the remaining distance displayed has been covered, it will no longer be possible to start the vehicle. Add at least the indicated quantity of AdBlue®.
- Top up XX,X l AdBlue Switch vehicle on, wait 60 sec. or engine start not possThe AdBlue® tank is empty. You can no longer start the vehicle. Add at least the indicated quantity of AdBlue®. Switch on the vehicle and wait approx. 60 seconds. Start the vehicle.

Plug-in hybrid:

THE FOLLOWING MESSAGES APPEAR IN ORDER ON THE DRIVER DISPLAY WHEN THE ADBLUE® TANK REQUIRES TOPPING UP:

- Refill AdBlue See Owner's Manual. The AdBlue® level has fallen below the reserve range. Top up with AdBlue® immediately.
- Top up AdBlue In XXX km Electric only. See Owner's Manual. The low AdBlue® level will result in the combustion engine being switched off after the displayed remaining distance has been driven. From this point on, the vehicle can be driven only in all-electric mode, depending on the state of charge of the high-voltage battery. Top up with AdBlue® immediately.
- Top up XX,X l AdBlue Only "Electric" available See Owner's ManualThe AdBlue® tank is empty. The vehicle can be driven only in all-electric mode, depending on the state of charge of the high-voltage battery. Add at least the indicated quantity of AdBlue®. Switch on the vehicle and wait approx. 60 seconds. Start the vehicle.

You can display the AdBlue® range and level on the driver display in the menu Service.

The AdBlue® range indicated is highly dependent upon driving style and operating conditions. The actual range can therefore deviate from the calculated range.

OPENING THE ADBLUE® FILLER CAP

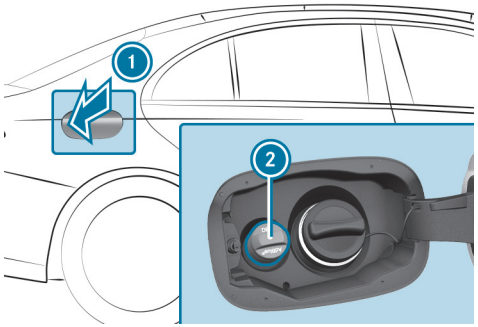

- Press on the centre rear of fuel filler flap (1).
- Turn AdBlue® filler cap (2) counter-clockwise and remove it.

You can also place the AdBlue® filler cap in the filler cap holder in the hinge arm of the fuel filler flap.

TOPPING UP ADBLUE®

Mercedes-Benz recommends that you top up AdBlue® at a pump system. If there is no AdBlue® pump system available you can also top up AdBlue® with a canister.

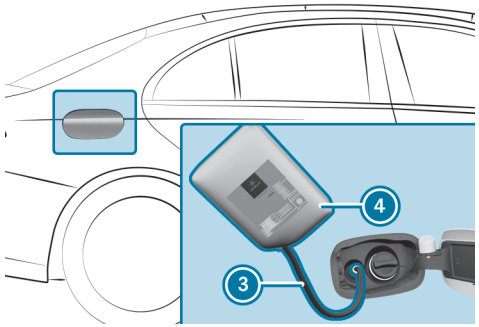

- Unscrew the cap of AdBlue® refill canister (4).
- Screw disposable hose (3) onto the opening of AdBlue® refill canister (4) until hand-tight.
- Screw disposable hose (3) onto the filler neck of the vehicle until hand-tight.
- Lift up and tip AdBlue® refill canister (4).

  The filling process stops when the AdBlue® tank is completely full.

  AdBlue® refill canister (4) can be removed when it has been only partially emptied.
- Unscrew disposable hose (3) and close AdBlue® refill canister (4) in reverse order.
- Replace AdBlue® filler cap (2) and turn it clockwise until it audibly engages.
- Close fuel filler flap (1).
- Switch on the vehicle for at least 60 seconds.

If it was no longer possible to start the vehicle due to the empty AdBlue® tank, it takes up to 60 seconds for topping up to be detected.

► Start the vehicle.

Avoid storing AdBlue® refill containers permanently in the vehicle.

Topping up the windscreen washer system

DANGER
Risk of fatal injuries when carrying out maintenance work during the charging process

During the charging process, the high-voltage on-board electrical system is under high voltage.

► Do not perform any maintenance work during the charging process.

WARNING
Risk of burns when opening the bonnet

IF YOU OPEN THE BONNET IN THE EVENT OF AN OVERHEATED ENGINE OR FIRE IN THE ENGINE COMPARTMENT, THE FOLLOWING SITUATIONS MAY OCCUR:

- You may come into contact with hot gases.
- You may come into contact with other escaping hot operating fluids.

► Before opening the bonnet, allow the engine to cool down.

► In the event of a fire in the engine compartment, keep the bonnet closed and call the fire service.

WARNING
Risk of injury due to moving parts

Components in the engine compartment may continue to run or start unexpectedly even when the drive system is switched off.

Observe the following if you must open the bonnet:

► Switch off the vehicle.

► Never touch the danger zones surrounding moving components, e.g. the rotation area of the fan.

► Remove jewellery and watches.

► Keep items of clothing and hair away from moving parts.

WARNING
Risk of burns from hot component parts in the engine compartment

Certain component parts in the engine compartment can be very hot, e.g. the engine, the cooler and parts of the exhaust system.

- Allow the engine to cool down and only touch component parts described in the following.

WARNING
- Risk of fire and injury due to windscreen washer concentrate

Windscreen washer concentrate is highly flammable. It could ignite if it comes into contact with hot engine component parts or the exhaust system.

- Make sure that no windscreen washer concentrate spills out next to the filler opening.

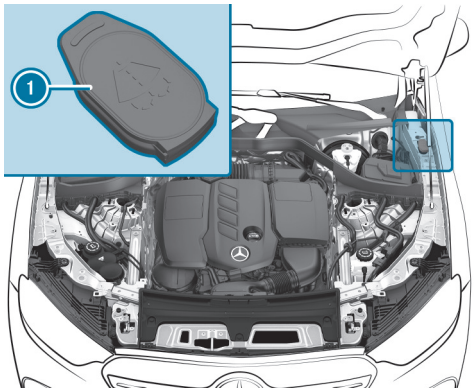

- Open the cap (1) by pulling on the front protrusion.
- Top up the washer fluid.

Replacing the windscreen wiper blades

WARNING
Risk of becoming trapped if the windscreen wipers are switched on while wiper blades are being replaced

If the windscreen wipers begin to move while you are changing the wiper blades, you can be trapped by the wiper arm.

- Always switch off the windscreen wipers and vehicle before changing the wiper blades.

MOVING THE WIPER ARMS INTO THE REPLACEMENT POSITION

- Switch the vehicle on and then off again immediately.
- Within around 15 seconds, press and hold the button on the combination switch for approximately three seconds (⟶ page 294).

  The wiper arms move into the replacement position.

REMOVING THE WIPER BLADES

- Fold the wiper arms away from the windscreen.

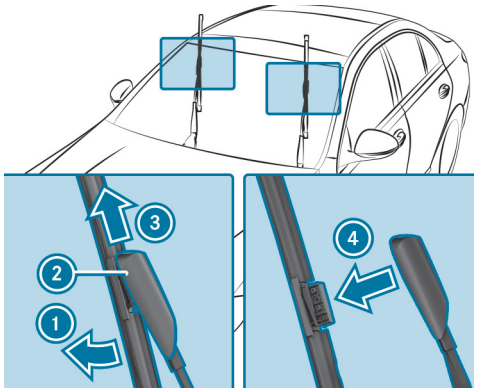

- Hold the wiper arm with one hand. With the other hand, turn the wiper blade away from the wiper arm in the direction indicated by the arrow (1) as far as it will go.
- Slide the catch (2) in the direction indicated by the arrow (3) until it engages in the removal position.
- Remove the wiper blade from the wiper arm in the direction indicated by the arrow (4).

FITTING THE WIPER BLADES

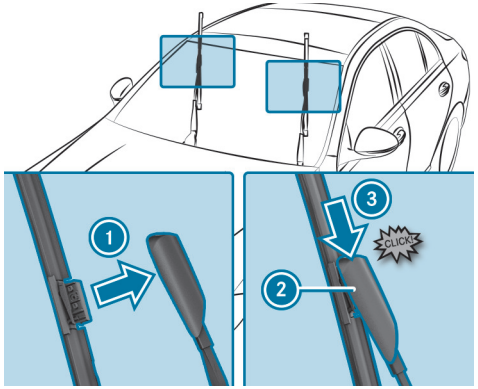

- Insert the new wiper blade into the wiper arm in the direction indicated by the arrow (1).
- Slide the catch (2) in the direction indicated by the arrow (3) until it engages in the locking position.
- Ensure that the wiper blade is seated correctly.
- Fold the wiper arms back onto the windscreen.
- Switch on the vehicle.
- Press the button on the combination switch.
  The wiper arms will return to their original positions.
- Switch off the vehicle.

SERVICE INDICATOR

There is a service indicator at the tip of the newly mounted wiper blades.

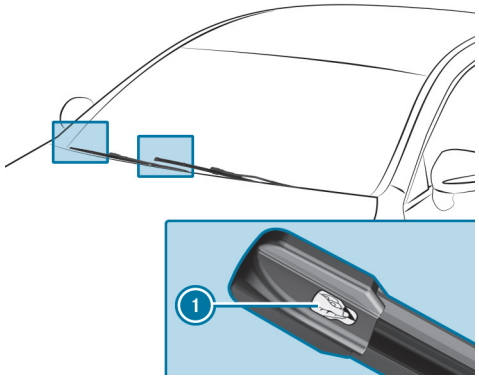

- Remove the protective film (1) from the service indicator.

When the colour of the service indicator changes from black to yellow, the wiper blades should be replaced.

Checking the engine oil level using the driver display

Requirements:

- The engine has been warmed up.
- The vehicle is parked on a level surface.
- The engine is running at idle speed.
- The bonnet is closed.

Determining the engine oil level can take up to 30 minutes with a normal driving style, and even longer with an active driving style.

Driver display:

→ Service

The engine oil level is shown.

ONE OF THE FOLLOWING MESSAGES WILL APPEAR ON THE DRIVER DISPLAY:

- Engine oil level Measuring now...: the engine oil level cannot be determined yet.

► Repeat the request after a maximum of 30 minutes of driving.

- Engine oil level OK and the bar display for indicating the engine oil level on the driver display is green and is between "min" and "max": the engine oil level is OK.

- Engine oil level Top up 1,0 l and the bar display for indicating the engine oil level on the driver display is yellow and is below "min":

► Add 1 litre of engine oil.

- Engine oil level Reduce and the bar display for indicating the engine oil level on the driver display is yellow and is above "max":

► Drain off any excess engine oil that has been added. Consult a qualified specialist workshop in this regard.

- For engine oil level, switch on vehicle

► Switch on the vehicle to check the engine oil level.

- Engine oil level System inoperative: The oil level sensor is defective or not connected.

► Consult a qualified specialist workshop.

- Engine oil level System currently inoperative

► Close the bonnet.

Information on washing the vehicle in a car wash

WARNING
Risk of an accident due to reduced braking power after washing the vehicle

Braking efficiency is reduced after washing the vehicle.

► After the vehicle has been washed, brake carefully while paying attention to the traffic conditions until braking power has been fully restored.

NOTE
Damage from automatic braking

THE VEHICLE WILL BRAKE AUTONOMOUSLY IN CERTAIN SITUATIONS IF THE FOLLOWING FUNCTIONS ARE SWITCHED ON:

- Active Brake Assist
- Active Distance Assist DISTRONIC
- HOLD function
- Active Parking Assist

To avoid damage to the vehicle, switch these systems off e.g. before towing it or in a car wash.

NOTE
Damage due to unsuitable car wash

► Before driving into a car wash make sure that the car wash is suitable for the vehicle dimensions.

► Ensure there is sufficient ground clearance between the underbody and the guide rails of the car wash.

► Ensure that the clearance width of the car wash, in particular the width of the guide rails, is sufficient.

TO AVOID DAMAGE TO YOUR VEHICLE WHEN USING A CAR WASH, ENSURE THE FOLLOWING BEFOREHAND:

- Active Distance Assist DISTRONIC is switched off.
- The HOLD function is switched off.
- The 360° camera or the reversing camera is switched off.
- The vehicle is locked and the door handles retracted.
- The side windows and sliding sunroof are completely closed.
- The outside mirrors are retracted.
- The blower for the ventilation and heating is switched off.
- The windscreen wiper switch is in position 0.
- The key is at least 6 m away from the vehicle. Otherwise, the boot lid or a door could open unintentionally.
  This also applies to the Digital Vehicle Key.
- For car washes with conveyor systems:
  - Neutral N is engaged.
  - The vehicle is locked from the inside.

- Do not make any hand movements in the area of the overhead control panel or deactivate the Sliding sunroof and roller sunblind option in the settings for the MBUX interior assistant (⟶ page 584).

Removing the wax from the windscreen and the wiper rubber after washing the vehicle will help to avoid smearing and reduce wiper noise.

Preparing for a holiday

Notes on adjusting the lights when you are driving abroad

Vehicles with static LED headlamps: it is not necessary to convert the headlamps. The legal requirements are also met in countries in which traffic drives on the other side of the road.

Vehicles with DIGITAL LIGHT: as a convenience function, the headlamps will automatically adjust when you cross the border into countries in which traffic drives on the other side of the road. If necessary, the headlamps can also be adjusted manually on the Low beam menu (⟶ page 290).

THE AUTOMATIC LIGHT ADJUSTMENT FUNCTION IS AVAILABLE:

- If automatic is selected on the Low beam menu
- If navigation and the navigation position are available

IN THE FOLLOWING CASES, CHECK THE HEADLAMP SETTING AND CHANGE IT MANUALLY IF NECESSARY:

- If the Low beam setting (left/right-side traffic) Manual adjustment only display message is shown.
- If the Check low beam setting (left/right-side traffic) display message is shown.

ONCE THE HEADLAMPS HAVE BEEN CONVERTED:

- Oncoming traffic will not be dazzled.
- The edge of the road will not be illuminated as far or as high.
- The "motorway mode" and "enhanced fog light" functions will not be available.

Notes on regularly inspecting wheels and tyres

WARNING
Risk of injury due to damaged tyres

Damaged tyres can cause tyre pressure loss.

► Check the tyres regularly for signs of damage and replace any damaged tyres immediately.

WARNING
Risk of aquaplaning due to insufficient tyre tread

Insufficient tyre tread will result in reduced tyre grip. There is a risk of an accident.

On a wet road surface the risk of aquaplaning is increased, in particular where speed is not adapted to suit the conditions.

► Check the tread depth and the condition of the tyre contact surface across the entire width of all tyres on a regular basis.

MINIMUM TREAD DEPTH FOR

- Summer tyres: 3 mm
- M+S tyres: 4 mm

► For safety reasons, replace the tyres before the legally-prescribed limit for the minimum tread depth is reached.

► Replace the tyres immediately if the legally-prescribed limit for the minimum tread depth is reached.

CARRY OUT THE FOLLOWING CHECKS ON ALL WHEELS REGULARLY, AT LEAST ONCE A MONTH OR AS REQUIRED, FOR EXAMPLE, PRIOR TO A LONG JOURNEY OR DRIVING OFF-ROAD:

- Check the tyre pressure (⟶ page 773).
- Visually inspect wheels and tyres for damage.
- Check the valve caps.
- Visual check of the tyre tread depth and the tyre contact surface across the entire width.

The minimum tread depth for summer tyres is 3 mm and for winter tyres 4 mm.

Removing the safety vest

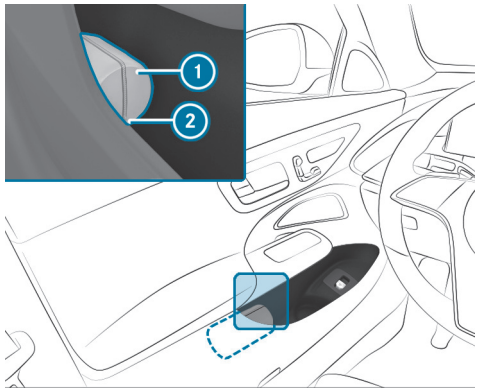

There is a safety vest stowage recess in the door stowage compartments of all doors for storing a safety vest.

► To remove: pull out the safety vest bag (1) using the loop (2).

► Open the safety vest bag (1) and take out the safety vest.
► To replace: fold the safety vest, roll it up and insert it into the safety vest bag (1).
► Slide the safety vest bag (1) along the underside of the armrest into the safety vest stowage recess. Ensure that the loop (2) remains hanging out so that it is easy to grasp.

ⓘ Remove the packaging film from a new safety vest before sliding it into the safety vest stowage recess. Otherwise, it may slide out unintentionally or the packaging may hinder its removal.

Observe the legal requirements for the individual countries.

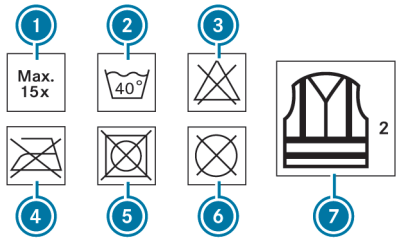

1. Maximum number of washes
2. Maximum wash temperature
3. Do not bleach
4. Do not iron
5. Do not tumble dry
6. Do not dry clean
7. Class 2 safety vest

The requirements defined by the legal standard are only fulfilled if the safety vest is the correct size and is fully closed.

REPLACE THE SAFETY VEST IN THE FOLLOWING CASES:

- The reflective strips are damaged or dirty.
- The maximum permissible number of washes is exceeded.
- The fluorescence property diminishes, e.g.due to permanent exposure to sunlight.

DISPOSE OF THE SAFETY VEST IN AN ENVIRONMENTALLY-FRIENDLY WAY:

- Please contact your local waste disposal company.

Removing the warning triangle

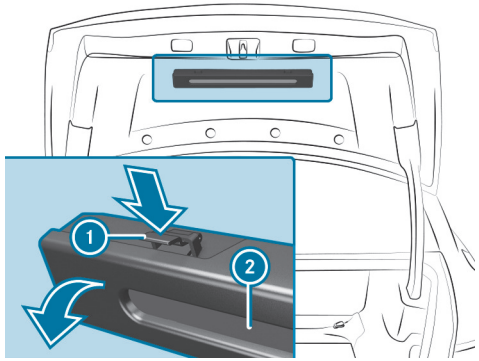

- ► Push both sides of the warning triangle holder (1) in the direction indicated by the arrow and open.
- ► Remove the warning triangle (2).

The warning triangle is located in the boot lid.

First-aid kit overview

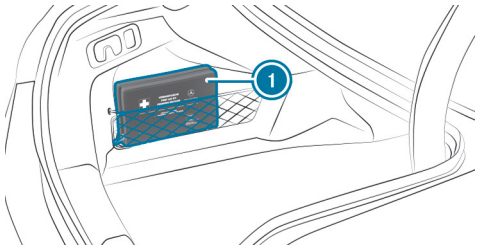

The first-aid kit (1) is located in the boot on the left in the stowage net.

Depending on the respective vehicle version, the first-aid kit (1) may be located in other positions in the boot.

Map data update overview

As the content of a digital road map has a short life, outdated data may have a negative effect on all navigation functions. For the best MBUX navigation experience, you should install all of the map updates offered by Mercedes-Benz.

THE FOLLOWING OPTIONS ARE AVAILABLE FOR THE UPDATE OF MAP DATA:

- Online map update
- Update via the customer profile on the Mercedes-Benz website
- Update at a Mercedes-Benz service centre
  Additional costs can be incurred in this process.

ONLINE MAP UPDATE
REQUIREMENTS:

- Digital Extras are available.
- You have a Mercedes me ID.
- The Digital Extra Online Map Update is available for your region.
- The Digital Extra has been activated.

ⓘ The Digital Extra Online Map Update is only available in certain countries.

Installation takes place in the background as an automatic map update.

The MBUX multimedia system installs all available map updates for the regions of Europe, North and South America, Korea, Japan, Australia/New Zealand and for other regions in which the vehicle is located or is moved.

The online map update is activated at the latest after the next time the vehicle is switched on.

UPDATES VIA THE MERCEDES-BENZ PORTAL
The map data for several regions can also be updated manually. Log in with your Mercedes me ID at: https://www.mercedes-benz.de/

Click on your account at the top right and follow the menu path My dashboard > Manage vehicle > Manage Digital Extras > Online Map Update. Select the regions to be downloaded to a storage medium.

After the map data has been copied, connect the storage medium with your vehicle. Select the notification with information about a new version of the map data and start the installation. After the MBUX multimedia system has been restarted, the updated map data is used.

Entering a POI or address

Requirements:

- **For the online search:**
  - There is an Internet connection.
  - Digital Extras are available.
  - You have created a Mercedes me ID.
  - The vehicle is linked to the Mercedes me ID and you have accepted the terms of use.
  - Further information can be found at: https://www.mercedes.me
  - The Digital Extra is available and has been activated.

If Online Search is not available, the search is performed using the data of the digital map.

Multimedia system:

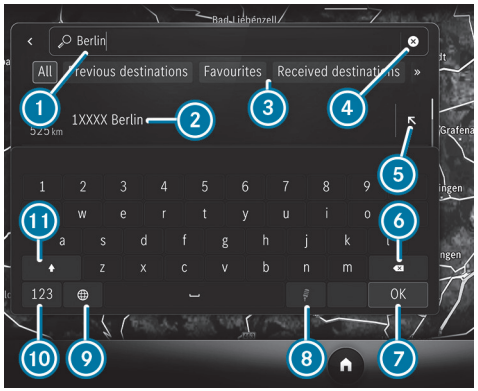

Example: entering a POI or address

1. Input line with current entry
2. Search result
3. Selects destination search, displays further destination searches with double arrow
4. Deletes an entry
5. Adopts the search result in the input line and continues the search
6. Deletes the last character entered
7. Hides the keypad
8. Starts the MBUX Voice Assistant (⟶ page 545)
9. Sets the written language
10. Switches to digits and special characters
11. Switches to upper-case or lower-case letters

► Enter a destination. The entries can be made in any order.
The search results are displayed in a list.

Online search results for POIs may contain additional information, for example opening times and ratings. The information is provided by an online map service.
This online function is not available in all countries.

THE FOLLOWING ENTRIES CAN BE MADE, FOR EXAMPLE IN (1):

- Town, street, house number or street, town
- Postcode
- POI name or POI category, e.g. Restaurants
- Town, POI name
- Contact name
- Junctions in the following entry format: "road A" and "road B"
- Geo-coordinates (⟶ page 618)

► Hide the keyboard with OK.

► Select the destination in the list.
The following menu shows the selected destination with the address information and a corresponding map section.
The menu enables the route to be calculated.

Searching for radio stations using station names or frequency entry

Multimedia system:

→ Home » Radio

- Select [search].
- Enter a station name or frequency.
- Select a station.

Luggage and loading

Attaching a roof luggage rack

WARNING
Risk of accident due to exceeding the maximum roof load

The vehicle centre of gravity and the usual driving characteristics as well as the steering and braking characteristics alter.

If you exceed the maximum roof load, the driving characteristics, as well as steering and braking, will be greatly impaired.

- ► Never exceed the maximum roof load and adjust your driving style.

You will find information on the maximum roof load in the "Technical data" section.

NOTE
Vehicle damage due to failure to observe the maximum permissible clearance height

If the vehicle height exceeds the maximum permissible clearance height, the roof and other vehicle parts may be damaged.

- ► Please observe the indicated maximum clearance height.
- ► If the vehicle exceeds the permissible clearance height, do not drive in.
- ► Take the modified vehicle height in the case of roof superstructures or other carrier systems into account.

NOTE
Damage to the panorama sliding sunroof due to non-approved roof luggage racks

The panorama sliding sunroof may be damaged by the roof luggage rack if you attempt to open it when using a roof luggage rack not tested and approved for Mercedes-Benz.

- When a roof luggage rack is fitted, open the panorama sliding sunroof only if this has been tested and approved for Mercedes-Benz.

The panorama sliding sunroof may be raised to allow ventilation of the vehicle interior.

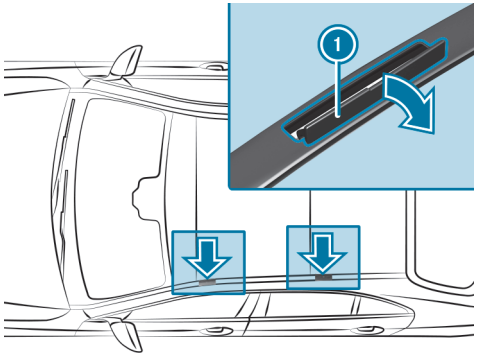

NOTE
Damage to the covers

The covers may be damaged and scratched when being opened.

- Do not use metallic or hard objects.
- Fold covers (1) carefully upwards in the direction of the arrow.
- Secure the roof luggage rack to the fastening points beneath covers (1).
- Comply with the installation instructions of the roof luggage rack manufacturer.
- Secure the load on the roof luggage rack.

Folding the rear seat backrests forwards

WARNING
Risk of becoming trapped when adjusting the seats

When you adjust a seat, you may trap yourself or a vehicle occupant.

- When adjusting a seat, make sure that no one has any body parts in the sweep of the seat.

WARNING
Risk of an accident because the seat backrest is not engaged

The seat backrest may fold forwards.

THERE IS A RISK OF THE FOLLOWING, IN PARTICULAR:

- The vehicle occupant may be pressed against the seat belt. The seat belt cannot protect as intended and could cause additional injury.
- A child restraint system is no longer properly supported or properly positioned and may no longer fulfil its function as intended.
- The seat backrest cannot restrain objects or goods in the boot or load compartment.

ALWAYS ENSURE THAT THE SEAT BACKREST IS ENGAGED, ESPECIALLY:

- After the seat has been adjusted.
- After the load compartment enlargement has been folded forwards

Ensure that the red marking of the lock verification indicator is no longer visible. Otherwise, the seat backrest will not be locked.

Always ensure that all vehicle occupants have their seat belts fastened correctly and are sitting properly. Particular attention must be paid to children.

Requirements:

- The rear seat backrest head restraints are fully inserted.
- The rear armrest has been folded up.

FOLDING THE REAR OUTER SEAT BACKRESTS FORWARDS

You can fold the centre and right seat backrests forwards separately.

The left seat backrest can be folded forwards only together with the centre seat backrest.

If you no longer require the folded-down rear seat backrest as a load area, fold the backrest back into place.

► Ensure that the centre seat backrest is in an upright position and locked to the left seat backrest (⟶ page 264).

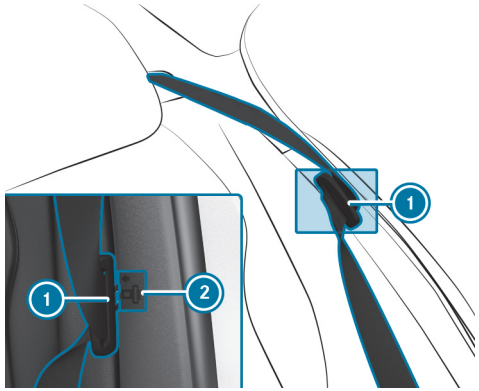

► Press the seat belt tongue of the seat belt (1) into the marked position (2).

► Move the driver's seat or front passenger seat forwards as necessary.

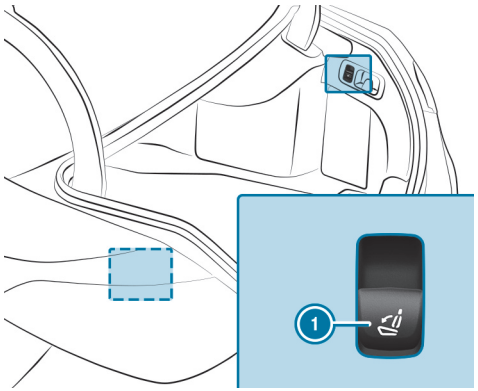

- **To fold the left seat backrest forward:** briefly press the left button (1).

  The left seat backrest will fold forwards together with the centre seat backrest.

  If the left seat backrest is not locked with the centre seat backrest, this will be shown on the central display.

- **To fold the right seat backrest forwards:** briefly press the right button (1).

  The right seat backrest will fold forwards.

ⓘ If you wish to fold only one of the outer seat backrests forwards, fold the right seat backrest forwards.

FOLDING THE CENTRE REAR SEAT BACKREST FORWARDS SEPARATELY

If you no longer require the folded-down seat backrest as a loading area, fold the backrest back into place.

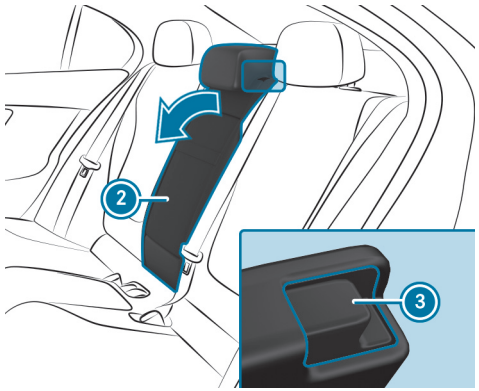

- Press the release catch (3).
- Fold the seat backrest (2) forwards.

Folding back the rear seat backrest

⚠ **WARNING**
Risk of becoming trapped when adjusting the seats

When you adjust a seat, you may trap yourself or a vehicle occupant.

- When adjusting a seat, make sure that no one has any body parts in the sweep of the seat.

WARNING
Risk of an accident because the seat backrest is not engaged

The seat backrest may fold forwards.

THERE IS A RISK OF THE FOLLOWING, IN PARTICULAR:

- The vehicle occupant may be pressed against the seat belt. The seat belt cannot protect as intended and could cause additional injury.
- A child restraint system is no longer properly supported or properly positioned and may no longer fulfil its function as intended.
- The seat backrest cannot restrain objects or goods in the boot or load compartment.

ALWAYS ENSURE THAT THE SEAT BACKREST IS ENGAGED, ESPECIALLY:

- After the seat has been adjusted.
- After the load compartment enlargement has been folded forwards

Make sure that the red marking of the lock verification indicator is no longer visible. Otherwise, the seat backrest is not locked.

Always ensure that all vehicle occupants have their seat belts fastened correctly and are sitting properly. Particular attention must be paid to children.

NOTE
Damage caused by trapping the seat belt when folding back the seat backrest

The seat belt could become trapped and thus be damaged when the seat backrest is folded back.

► Make sure that the seat belt is not trapped when folding back the seat backrest.

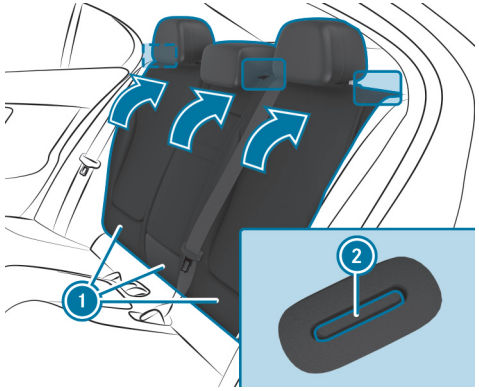

► Move the driver's or front passenger seat forwards, if necessary.

► Swivel seat backrest (1) back until it engages.

If the seat backrest is not engaged and locked in place, red lock verification indicator (2) will be visible.

Opening the stowage space under the boot floor

NOTE
Damage to the handle in the boot floor

If the handle in the boot is left protruding, the handle may be damaged.

- Before closing the boot lid, detach the handle and press it down closed again.

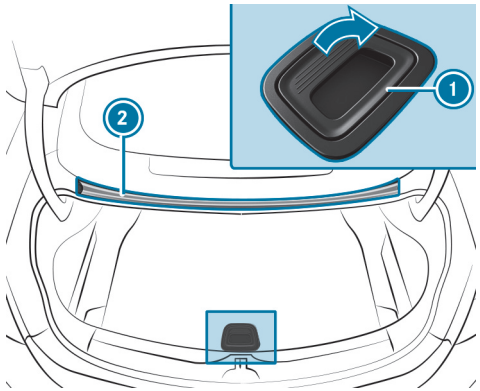

- Pull handle (1) up and hook it to top seal (2) of the load compartment.

Swinging the ball neck in and out fully electrically

WARNING
Risk of accident due to the ball neck not being engaged

If the ball neck is not engaged, the trailer may come loose.

- Make sure that the ball neck securely engages and locks into place.

NOTE
Damage to the all-electric trailer hitch due to additional pressure

The all-electric trailer hitch could be mechanically damaged by applying additional pressure when the ball neck is being extended or retracted.

- Do not make the ball neck extend/retract faster by applying additional pressure.

NOTE
Increased risk of damage to property due to folded-out ball neck

- When the trailer is not coupled or the bicycle rack is attached, fold in the ball neck or, in the case of a fully electric trailer hitch, retract the ball neck.

NOTE
Damage to the vehicle due to incorrect use of the trailer hitch

If a trailer hitch is used to recover the vehicle, the vehicle or the trailer hitch itself may be damaged in the process.

- Use the trailer hitch only for pulling a trailer or attaching approved carrier systems (e.g. a bicycle rack).

  Exception: Since vehicles with a trailer hitch do not have a fixture for a towing eye at the rear, towing or tow-starting is permitted.

- When towing or tow-starting with the trailer hitch, observe the information in the section "Fitting and removing the towing eye."

SWINGING OUT THE BALL NECK FULLY ELECTRICALLY

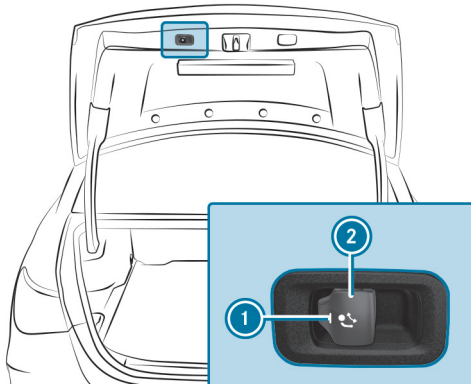

- Secure the vehicle against rolling backwards or forwards.
- Keep the swivel range clear.
- Pull the button (2).

  The indicator lamp (1) begins flashing and a display message reading Trailer coupling in motion appears on the driver display.

  The ball neck swings out fully electrically.

- Wait until the ball neck has reached the swung-out position with a distinct locking noise.

  When the indicator lamp (1) lights up continuously, the ball neck is securely locked in place.

  If the ball neck is not securely locked in place, the indicator lamp (1) begins flashing and a display message reading Trailer coupling Check lock appears on the driver display.

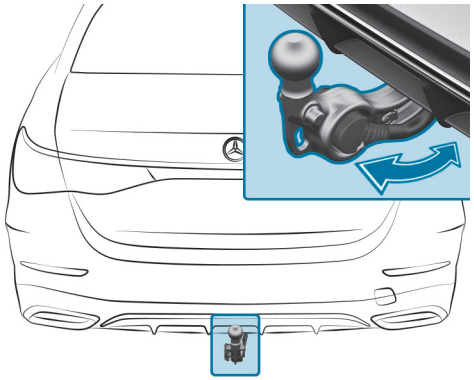

SWINGING IN THE BALL NECK FULLY ELECTRICALLY

- Secure the vehicle against rolling backwards or forwards.
- Remove the trailer cable or adapter plug.
- Pull the button (2).

  The indicator lamp (1) begins flashing and a display message reading Trailer coupling in motion appears on the driver display.

The ball neck swings in fully electrically.

► Wait until the ball neck has reached the swung-in locked position.
When the indicator lamp (1) goes out, the ball neck is securely locked in place.
If the ball neck is not securely locked in place, the indicator lamp (1) begins flashing and a display message reading Trailer coupling Check lock appears on the driver display.

OBSERVE THE INFORMATION ON NOTIFICATIONS ON THE DRIVER DISPLAY:

- Indicator lamps and warning lamps (⟶ page 968)
- Display messages (⟶ page 887)

Overview of the tie-down eyes

Observe the notes on loading the vehicle (⟶ page 256).

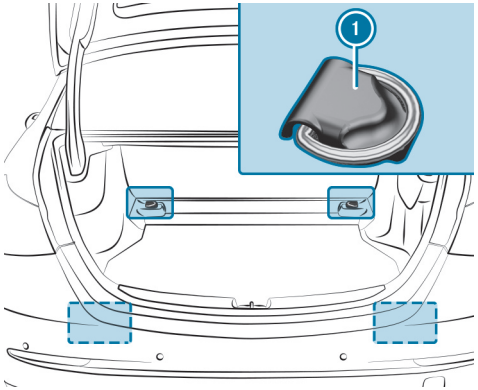

(1) Tie-down eyes

Overview of the front storage compartments

⚠ WARNING
Risk of injury due to objects being stowed incorrectly

If objects in the vehicle interior are stowed incorrectly, they can slide or be thrown around and hit vehicle occupants. In addition, cup holders, open stowage spaces and mobile phone brackets cannot always retain all objects they contain.

There is a risk of injury, particularly in the event of sudden braking or a sudden change in direction.

► Always stow objects in such a way that they cannot be thrown around in such situations.

► Always make sure that objects do not protrude from stowage spaces, luggage nets or stowage nets.

► Close the lockable stowage spaces before starting a journey.

► Always stow and secure heavy, hard, pointed, sharp-edged, fragile or bulky objects in the boot.

Observe the notes on loading the vehicle.

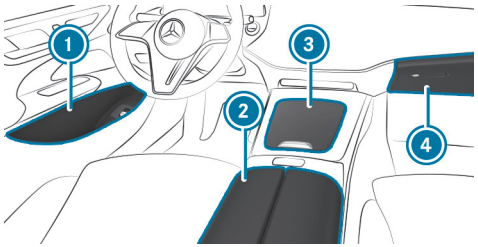

1. Stowage spaces in the doors
2. Stowage and telephone compartment beneath the armrest with USB ports
3. Stowage compartment in the front centre console, with cup holders, USB ports and charging module for wireless charging of mobile phones depending on the vehicle version
4. Glove compartment

ⓘ The compartment under armrest 2 and the stowage compartment in centre console 3 are connected via a channel so that cables can be routed through them. This allows, for example, USB connection cables for connecting devices to be stowed in both compartments.

ⓘ The rubber mat in the stowage compartment in front centre console 3 can be removed for cleaning with clean, lukewarm water. Observe the notes on caring for the interior (⟶ page 733).

Locking/unlocking the glove box

⚠ **WARNING**
Risk of injury due to objects being stowed incorrectly

If objects in the vehicle interior are stowed incorrectly, they can slide or be thrown around and hit vehicle occupants. In addition, cup holders, open stowage spaces and mobile phone brackets cannot always retain all objects they contain.

There is a risk of injury, particularly in the event of sudden braking or a sudden change in direction.

- ► Always stow objects in such a way that they cannot be thrown around in such situations.
- ► Always make sure that objects do not protrude from stowage spaces, luggage nets or stowage nets.
- ► Close the lockable stowage spaces before starting a journey.
- ► Always stow and secure heavy, hard, pointed, sharp-edged, fragile or bulky objects in the boot.

Observe the information on loading the vehicle.

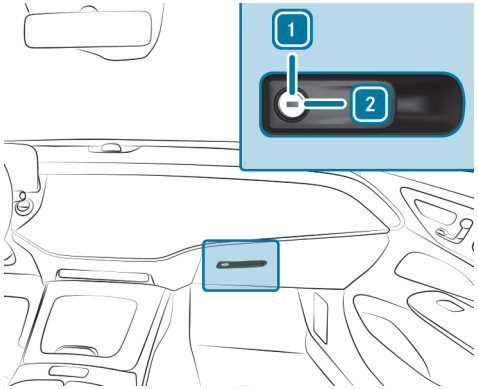

- Turn the emergency key a quarter turn clockwise [2] (to lock) or anti-clockwise [1] (to unlock).

Ice and snow

Notes on regularly inspecting wheels and tyres

WARNING
Risk of injury due to damaged tyres

Damaged tyres can cause tyre pressure loss.

► Check the tyres regularly for signs of damage and replace any damaged tyres immediately.

WARNING
Risk of aquaplaning due to insufficient tyre tread

Insufficient tyre tread will result in reduced tyre grip. There is a risk of an accident.

On a wet road surface the risk of aquaplaning is increased, in particular where speed is not adapted to suit the conditions.

► Check the tread depth and the condition of the tyre contact surface across the entire width of all tyres on a regular basis.

MINIMUM TREAD DEPTH FOR

- Summer tyres: 3 mm
- M+S tyres: 4 mm

► For safety reasons, replace the tyres before the legally-prescribed limit for the minimum tread depth is reached.

► Replace the tyres immediately if the legally-prescribed limit for the minimum tread depth is reached.

CARRY OUT THE FOLLOWING CHECKS ON ALL WHEELS REGULARLY, AT LEAST ONCE A MONTH OR AS REQUIRED, FOR EXAMPLE, PRIOR TO A LONG JOURNEY OR DRIVING OFF-ROAD:

- Check the tyre pressure (⟶ page 773).

- Visually inspect wheels and tyres for damage.
- Check the valve caps.
- Visual check of the tyre tread depth and the tyre contact surface across the entire width.

  The minimum tread depth for summer tyres is 3 mm and for winter tyres 4 mm.

Setting the speed limit for winter tyres

Multimedia system:

→ ⌂ » Settings » Vehicle » Winter tyre limit

► Activate or deactivate Winter tyre limit.

SETTING A SPEED

► Select Winter tyre limit.

► Select a speed.

Notes on snow chains

WARNING
Risk of accident due to incorrectly fitted snow chains

If you have fitted snow chains to the front wheels, they may drag against the vehicle body or chassis components.

► Never fit snow chains to the front wheels.

► Only fit snow chains on the rear wheels in pairs.

NOTE
Damage to body or suspension parts caused by fitted snow chains

Fitting snow chains to the front wheels of 4MATIC models can damage body or suspension parts.

► Only fit snow chains to the rear wheels of 4MATIC models.

NOTE
Damage to wheel trims caused by fitted snow chains

Fitting snow chains to aluminium wheels can damage the wheel trims.

► Remove the wheel trims from the aluminium wheels before fitting snow chains.

OBSERVE THE FOLLOWING NOTES WHEN USING SNOW CHAINS:

- Snow chains are only permissible for certain wheel/tyre combinations. You can obtain information about this from a Mercedes-Benz Service Centre.
- For safety reasons, only use snow chains that have been specifically approved for your vehicle by Mercedes-Benz, or snow chains of the same quality standard.
- Comply with the installation instructions of the snow chain manufacturer.
- If snow chains are fitted, the maximum permissible speed is 50 km/h.
- **Vehicles with Active Parking Assist:** do not use Active Parking Assist when snow chains are fitted.
- **Vehicles with level control:** if snow chains are fitted, only drive at a raised vehicle level (⟶ page 467).

ⓘ You can permanently limit the speed for driving with winter tyres (⟶ page 428).

ⓘ You can deactivate ESP® to start off (⟶ page 419). This allows the wheels to spin, achieving increased tractive power.

Notes on windscreen washer fluid

Observe the notes on operating fluids (⟶ page 862).

WARNING
- Risk of fire and injury due to windscreen washer concentrate

Windscreen washer concentrate is highly flammable. It could ignite if it comes into contact with hot engine component parts or the exhaust system.

► Make sure that no windscreen washer concentrate spills out next to the filler opening.

NOTE
Damage to the exterior lighting due to unsuitable windscreen washer fluid

Unsuitable windscreen washer fluids may damage the plastic surface of the exterior lighting.

► Only use windscreen washer fluids which are also suitable for use on plastic surfaces, e.g. MB SummerFit or MB WinterFit.

NOTE
Blocked spray nozzles caused by mixing windscreen washer fluids

► Do not mix MB SummerFit and MB WinterFit with other windscreen washer fluids.

Do not use distilled or de-ionised water. Otherwise, the fill level sensor may be actuated incorrectly.

RECOMMENDED WINDSCREEN WASHER FLUID:

- above freezing point:MB SummerFit, for example
- below freezing point:MB WinterFit, for example

For the correct mixing ratio, refer to the information on the antifreeze container.

Mix washer fluid with windscreen washer fluid all year round.

Topping up the windscreen washer system

DANGER
Risk of fatal injuries when carrying out maintenance work during the charging process

During the charging process, the high-voltage on-board electrical system is under high voltage.

► Do not perform any maintenance work during the charging process.

WARNING
Risk of burns when opening the bonnet

IF YOU OPEN THE BONNET IN THE EVENT OF AN OVERHEATED ENGINE OR FIRE IN THE ENGINE COMPARTMENT, THE FOLLOWING SITUATIONS MAY OCCUR:

- You may come into contact with hot gases.
- You may come into contact with other escaping hot operating fluids.

► Before opening the bonnet, allow the engine to cool down.

► In the event of a fire in the engine compartment, keep the bonnet closed and call the fire service.

WARNING
Risk of injury due to moving parts

Components in the engine compartment may continue to run or start unexpectedly even when the drive system is switched off.

Observe the following if you must open the bonnet:

► Switch off the vehicle.

► Never touch the danger zones surrounding moving components, e.g. the rotation area of the fan.

► Remove jewellery and watches.

► Keep items of clothing and hair away from moving parts.

WARNING
Risk of burns from hot component parts in the engine compartment

Certain component parts in the engine compartment can be very hot, e.g. the engine, the cooler and parts of the exhaust system.

► Allow the engine to cool down and only touch component parts described in the following.

WARNING
- Risk of fire and injury due to windscreen washer concentrate

Windscreen washer concentrate is highly flammable. It could ignite if it comes into contact with hot engine component parts or the exhaust system.

► Make sure that no windscreen washer concentrate spills out next to the filler opening.

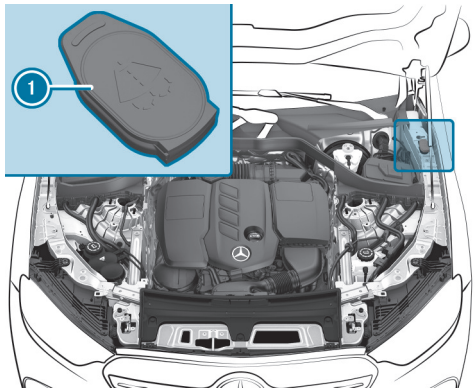

- Open the cap (1) by pulling on the front protrusion.
- Top up the washer fluid.

Replacing the windscreen wiper blades

WARNING
Risk of becoming trapped if the windscreen wipers are switched on while wiper blades are being replaced

If the windscreen wipers begin to move while you are changing the wiper blades, you can be trapped by the wiper arm.

- Always switch off the windscreen wipers and vehicle before changing the wiper blades.

MOVING THE WIPER ARMS INTO THE REPLACEMENT POSITION

- Switch the vehicle on and then off again immediately.
- Within around 15 seconds, press and hold the button on the combination switch for approximately three seconds (→ page 294).

  The wiper arms move into the replacement position.

REMOVING THE WIPER BLADES

- Fold the wiper arms away from the windscreen.

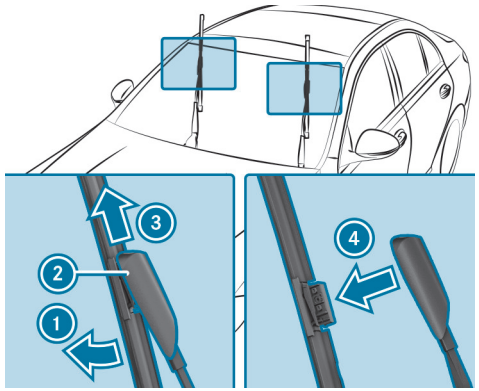

- Hold the wiper arm with one hand. With the other hand, turn the wiper blade away from the wiper arm in the direction indicated by the arrow (1) as far as it will go.
- Slide the catch (2) in the direction indicated by the arrow (3) until it engages in the removal position.
- Remove the wiper blade from the wiper arm in the direction indicated by the arrow (4).

FITTING THE WIPER BLADES

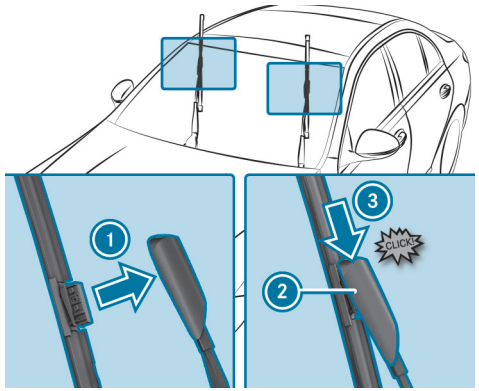

- Insert the new wiper blade into the wiper arm in the direction indicated by the arrow (1).
- Slide the catch (2) in the direction indicated by the arrow (3) until it engages in the locking position.
- Ensure that the wiper blade is seated correctly.
- Fold the wiper arms back onto the windscreen.
- Switch on the vehicle.
- Press the button on the combination switch.
  The wiper arms will return to their original positions.
- Switch off the vehicle.

SERVICE INDICATOR

There is a service indicator at the tip of the newly mounted wiper blades.

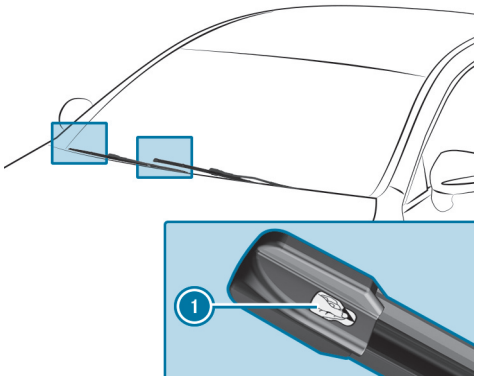

- Remove the protective film (1) from the service indicator.

When the colour of the service indicator changes from black to yellow, the wiper blades should be replaced.

Switching the auxiliary heating/ventilation on/off

DANGER

Risk of fatal injury due to poisonous exhaust gases

If the tailpipe is blocked or sufficient ventilation is not possible, poisonous exhaust gases such as carbon monoxide may enter the vehicle. This is the case in enclosed spaces or if the vehicle gets stuck in snow, for example.

- Always switch the stationary heater off in enclosed spaces without an air extraction system, e.g. in garages.
- Keep the tailpipe and the area around the vehicle free from snow when the engine or the stationary heater is running.
- Open a window on the side of the vehicle facing away from the wind to ensure an adequate supply of fresh air.

WARNING
Risk of fire due to hot stationary heater components and exhaust gases

Flammable materials such as leaves, grass or twigs may ignite.

► When the stationary heater is switched on, make sure that:
- hot vehicle parts do not come into contact with flammable materials.
- the exhaust gas can flow out of the stationary heater exhaust pipe unhindered.
- the exhaust gas does not come into contact with flammable materials.

NOTE
Battery discharge caused by stationary heater or stationary ventilation operation

Operating the stationary heater or stationary ventilation drains the battery.

► After heating or ventilating the vehicle twice, drive for a longer period of time.

Requirements:

ⓘ The following function is equipment-dependent.

- The vehicle has a stationary heater.
- The outside temperature is below 15°C
- The fuel tank is sufficiently full.

ⓘ If the fill level of the fuel tank is too low, stationary heating mode may be restricted.

► Set the temperature using buttons ⊕ or ⊖ on the climate bar on the central display.

► Press the button on the control panel on the front centre console.
The red or blue indicator lamp on the button will light up or go out.

THE COLOURS OF THE INDICATOR LAMP HAVE THE FOLLOWING MEANINGS:

- **Blue:** stationary ventilation is switched on.
- **Red:** the stationary heater is switched on.
- **Yellow:** the departure time is preselected.

The stationary heater/ventilation will switch off automatically after 50 minutes.

Help in the event of a breakdown

Activating/deactivating the hazard warning lights

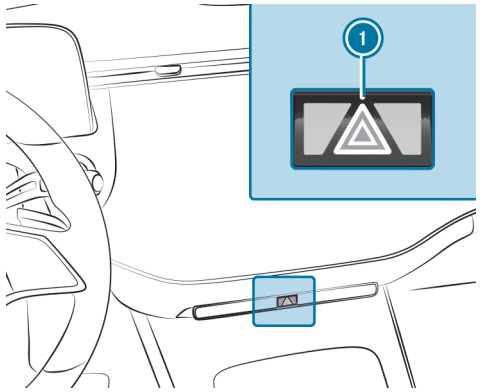

► Press button 1.

IN THE FOLLOWING SITUATIONS, THE HAZARD WARNING LIGHTS WILL SWITCH ON AUTOMATICALLY:

- An airbag was deployed.
- An emergency stop has been initiated (⟶ page 441)
- The vehicle brakes are applied heavily from a speed of more than 70 km/h to a standstill.

When you pull away again, the hazard warning light system will switch off automatically at approximately 10 km/h. You can also switch off the hazard warning light system using the warning lamp button.

Removing the fire extinguisher

WARNING
Risk of accident due to an incorrectly secured fire extinguisher in the driver's footwell

A fire extinguisher may impede pedal travel or block a depressed pedal.

This jeopardises the operating and road safety of the vehicle.

The fire extinguisher can be flung around and injure the driver or other vehicle occupants.

► Always store and secure the fire extinguisher in the bracket.

► Do not remove the fire extinguisher while driving.

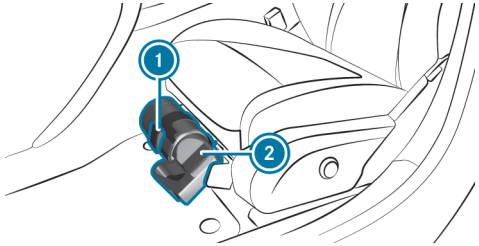

► Pull the tab 1 upwards.

► Fold the tab 1 down.

► Remove the fire extinguisher (2).

Removing the safety vest

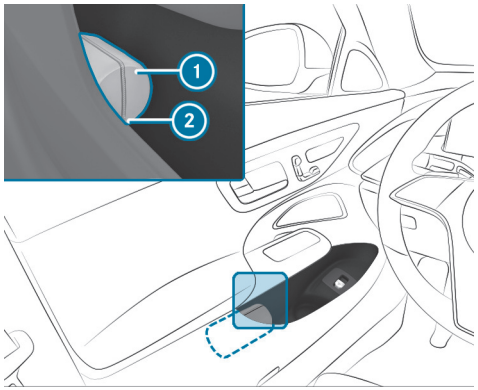

There is a safety vest stowage recess in the door stowage compartments of all doors for storing a safety vest.

► To remove: pull out the safety vest bag (1) using the loop (2).

► Open the safety vest bag (1) and take out the safety vest.
► To replace: fold the safety vest, roll it up and insert it into the safety vest bag (1).
► Slide the safety vest bag (1) along the underside of the armrest into the safety vest stowage recess. Ensure that the loop (2) remains hanging out so that it is easy to grasp.

ⓘ Remove the packaging film from a new safety vest before sliding it into the safety vest stowage recess. Otherwise, it may slide out unintentionally or the packaging may hinder its removal.
Observe the legal requirements for the individual countries.

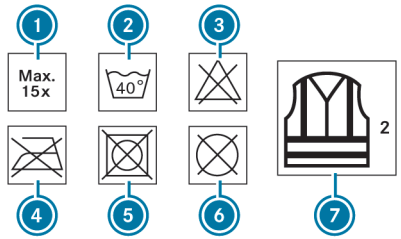

(1) Maximum number of washes
(2) Maximum wash temperature
(3) Do not bleach
(4) Do not iron
(5) Do not tumble dry
(6) Do not dry clean
(7) Class 2 safety vest

The requirements defined by the legal standard are only fulfilled if the safety vest is the correct size and is fully closed.

REPLACE THE SAFETY VEST IN THE FOLLOWING CASES:

- The reflective strips are damaged or dirty.
- The maximum permissible number of washes is exceeded.
- The fluorescence property diminishes, e.g.due to permanent exposure to sunlight.

DISPOSE OF THE SAFETY VEST IN AN ENVIRONMENTALLY-FRIENDLY WAY:

- Please contact your local waste disposal company.

Removing the warning triangle

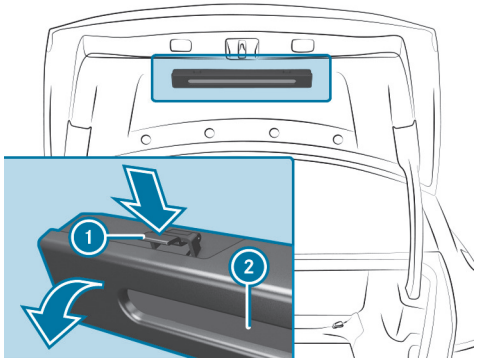

- Push both sides of the warning triangle holder (1) in the direction indicated by the arrow and open.
- Remove the warning triangle (2).

The warning triangle is located in the boot lid.

First-aid kit overview

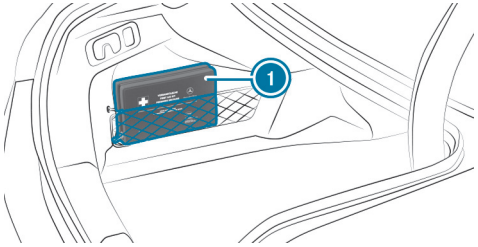

The first-aid kit (1) is located in the boot on the left in the stowage net.

Depending on the respective vehicle version, the first-aid kit (1) may be located in other positions in the boot.

QR codes for the rescue card

QR codes are attached in the fuel filler flap and on the opposite side on the B-pillar. In the event of an accident, rescue services can use the QR code to quickly find the appropriate rescue card for your vehicle. The current rescue card contains the most important information about your vehicle (e.g. the routing of the electric lines) in compact form.

Additional information can be obtained at: https://rk.mb-qr.com/de/

Starting assistance and charging the 12 V battery

PREPARING STARTING ASSISTANCE/CHARGING

- Secure the vehicle by applying the electric parking brake.
- Switch the transmission to position P.
- Switch off the vehicle and all electrical consumers.
- Open the bonnet.

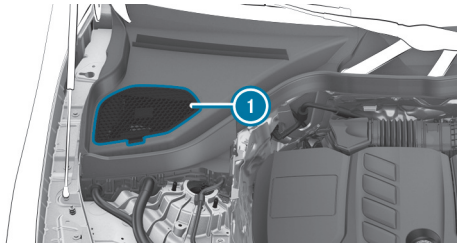

- Open cover (1) of the jump-start connection point.

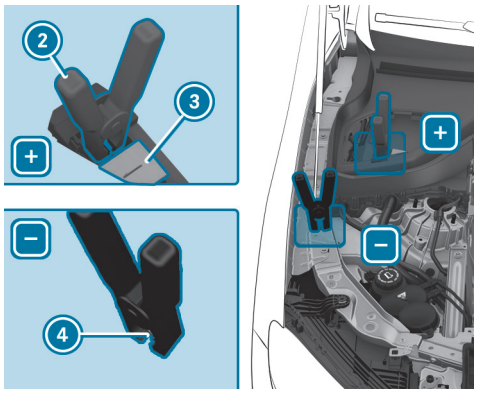

- Open cover (3) of positive contact (2) of the jump-start connection point.

STARTING ASSISTANCE

- Connect positive contact (2) on your vehicle to the positive terminal of the donor battery using the jump lead. Always begin with positive clamp (2) on your own vehicle first.
- Start the engine of the donor vehicle and run it at idle speed.
- Connect the negative terminal of the donor battery to earth point (4) of your vehicle using the jump lead. Begin with the donor battery first.
- Start the engine of your own vehicle.
- Let the engines run for several minutes.
- Before disconnecting the jump leads, switch on an electrical consumer in your own vehicle, e.g. the rear window heater or the lighting.

When the starting assistance procedure is complete:

- First, remove the jump leads from earth point (4) and the negative terminal of the donor battery, then from positive contact (2) and the positive terminal of the donor battery. Begin each time with the contacts on your own vehicle first.
- After removing the jump leads, close cover (3) of positive contact (2).
- Close cover (1).

If your vehicle has been started with starting assistance, it may not be possible to use the electric drive for approximately 30 minutes.

Further information can be obtained at a qualified specialist workshop.

CHARGING

- Connect positive contact (2) of the vehicle to the positive terminal of the charger using the charging cable. Always begin with positive contact (2) of the vehicle.
- Connect the negative terminal of the charger and earth point (4) on the vehicle with the charging cable. Start with the charger.
- Start the charging process.

When the charging process is complete:

- First, remove the charging cable from earth point (4) and the negative terminal of the charger, then from positive contact (2) and the positive terminal of the charger. Begin each time with the contacts of the vehicle.
- After removing the charging cable, close cover (3) of positive contact (2).
- Close cover (1).

Further information can be obtained at a qualified specialist workshop.

Notes on electrical fuses

WARNING
Risk of accident and injury due to overloaded lines

If you manipulate or bridge a faulty fuse or if you replace it with a fuse with a higher amperage, the electric line could be overloaded.

This could result in a fire.

- Always replace faulty fuses with specified new fuses containing the correct amperage.

NOTE
Damage due to incorrect fuses

Using incorrect fuses can result in damage to electrical components or systems or their functions being considerably restricted.

- Use only fuses approved for Mercedes-Benz with the respective specified fuse rating.

Replace blown fuses with equivalent fuses, identifiable by their colour and label. The fuse ratings and further information to be observed can be found in the fuse assignment diagram.

Fuse assignment diagram: on the fuse box in the boot (⟶ page 766).

NOTE
Damage or malfunctions caused by moisture

Moisture may cause damage to the electrical system or cause it to malfunction.

- When the fuse box is open, make sure that no moisture can enter the fuse box.
- When closing the fuse box, make sure that the seal of the lid is positioned correctly on the fuse box.

If the newly inserted fuse also blows, have the cause determined and rectified at a qualified specialist workshop.

ENSURE THE FOLLOWING BEFORE REPLACING A FUSE:

- The vehicle is secured against rolling away.
- All electrical consumers are switched off.
- The vehicle is switched off.

THE ELECTRICAL FUSES ARE LOCATED IN VARIOUS FUSE BOXES:

- Fuse box in the engine compartment on the driver's side (⟶ page 764)
- Fuse box on the driver's side of the cockpit (⟶ page 765)
- Fuse box in the front passenger footwell (⟶ page 765)
- Fuse box in the boot (⟶ page 766)

Notes on flat tyres

WARNING
Risk of accident due to a flat tyre

A flat tyre severely affects the driving characteristics as well as steering and braking.

tyres that do not feature run-flat characteristics:

- ► Do not drive on with a flat tyre.
- ► Change the flat tyre immediately with an emergency spare wheel or spare wheel. Alternatively, consult a qualified specialist workshop.

Run-flat tyres:

- ► Observe the information and warning notes on MOExtended tyres (run-flat tyres).

IN THE EVENT OF A FLAT TYRE, THE FOLLOWING OPTIONS ARE AVAILABLE DEPENDING ON YOUR VEHICLE'S EQUIPMENT:

- **Vehicles with a TIREFIT kit:** you can seal the tyre so that it is possible to continue the journey for a short period of time. To do this, use the TIREFIT kit (⟶ page 741).
- **Vehicles with Mercedes-Benz Support:** in the event of a breakdown, you can make a breakdown call via the overhead control panel (⟶ page 674).
- **All vehicles:** change the wheel (⟶ page 782).

The emergency spare wheel is only available in certain countries (⟶ page 789).

Overview of the tyre-change tool kit

With the exception of some country-specific variants, vehicles are not equipped with a tyre-change tool kit. Consult a qualified specialist workshop to find out which tyre-change tool kit is necessary and approved for a wheel change on your vehicle.

YOU REQUIRE THE FOLLOWING TOOLS, FOREXAMPLE, TO CHANGE A WHEEL:

- Jack
- Chock
- Wheel wrench
- Centring pin

The jack weighs approximately 3.4 kg.
The maximum load capacity of the jack can be found on the sticker affixed to the jack.
The jack is maintenance-free. In the event of a malfunction, please contact a qualified specialist workshop.

The tyre-change tool kit is located in the tool bag (1) in the boot.

When stowing the tool bag, ensure that it is adequately secured.

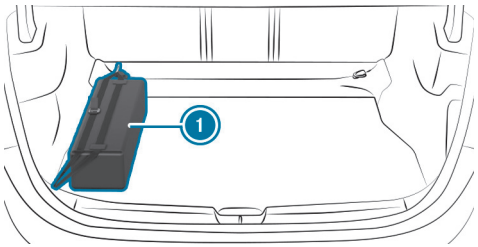

THE TOOL BAG CONTAINS:

- Jack
- Gloves
- Wheel wrench
- Centring pin
- Folding chock
- Ratchet wrench for jack

TIREFIT kit storage location

PLUG-IN HYBRID

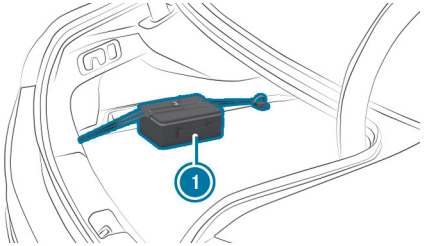

The TIREFIT kit (1) is located on the left-hand side of the boot upon delivery of the vehicle.

Not plug-in hybrid

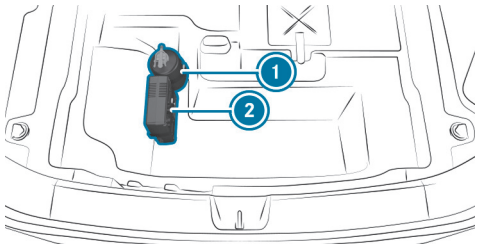

(1) Tyre sealant bottle
(2) Tyre inflation compressor

The TIREFIT kit is located under the boot floor upon delivery of the vehicle.

Depending on the vehicle version, the TIREFIT kit may be located in a different position in the boot.

DEPENDING ON THE RESPECTIVE POWER CATEGORY (LK), THE TYRE INFLATION COMPRESSOR WEIGHS AS FOLLOWS:

- LK2 – 12 V/15 A, 180 W, 0.9 kg

You can find information on the power category (LK) and/or electrical data on the back of the tyre inflation compressor.
The tyre inflation compressor is maintenance-free. In the event of a malfunction, please contact a qualified specialist workshop.

Towing the vehicle with both axles on the ground

► Observe the notes on the permitted towing methods (⟶ page 754).

- ► Plug-in hybrid: observe the notes on the permitted towing methods (⟶ page 755).
- ► Make sure that the battery is connected and charged.

OBSERVE THE FOLLOWING POINTS WHEN THE BATTERY IS DISCHARGED:

- The vehicle cannot be started.
- The electric parking brake cannot be released or applied.
- **Vehicles with automatic transmission:** The transmission cannot be shifted to position N or P.

ⓘ **Vehicles with automatic transmission:** If the transmission cannot be shifted to position N or if the display does not show anything, transport the vehicle (⟶ page 760, 757). A tow truck with lifting equipment is required for vehicle transport.

NOTE
Damage due to towing away at excessively high speeds or over long distances

The drivetrain could be damaged when towing at excessively high speeds or over long distances.

- ► A towing speed of 50 km/h must not be exceeded.
- ► A towing distance of 50 km must not be exceeded.

WARNING
Risk of accident when towing a vehicle with too much weight

IF THE VEHICLE TO BE TOWED IS HEAVIER THAN THE PERMISSIBLE GROSS MASS OF YOUR VEHICLE, THE FOLLOWING SITUATIONS CAN ARISE:

- The towing eye breaks off.
- The combination oscillates and can capsize.

- ► Before towing, check whether the vehicle to be towed exceeds the permissible gross mass.

If a vehicle is to be towed away, its permissible gross mass must not exceed the permissible gross mass of the towing vehicle.

- ► Information on the permissible gross mass of the vehicle can be found on the vehicle identification plate (⟶ page 860).
- ► Fit the towing eye (⟶ page 761).
- ► Fasten the towing device.

NOTE
Damage due to incorrect connection of the tow bar

- ► Only connect the tow rope or tow bar to the towing eyes.

- ► Deactivate the automatic locking mechanism (⟶ page 208).
- ► Do not activate the HOLD function (⟶ page 421).

- Deactivate tow-away protection (⟶ page 231).
- Deactivate Active Brake Assist (⟶ page 453).
- **Vehicles with automatic transmission:** Shift the transmission to position N.
- **Vehicles with automatic transmission:** Do not open the driver's door or front passenger door; the transmission otherwise automatically shifts to position P.
- Release the electric parking brake.

WARNING
Risk of accidents due to restricted safety-related functions during towing

SAFETY-RELEVANT FUNCTIONS ARE RESTRICTED OR NO LONGER AVAILABLE IN THE FOLLOWING SITUATIONS:

- The vehicle is switched off.
- The brake system or the power steering is malfunctioning.
- The power supply or the on-board electrical system is defective.

If your vehicle is being towed, considerably more force may be required for steering and braking.

In addition, important vehicle display messages cannot be seen if the driver display is faulty.

- Use a tow bar.
- Before towing, ensure that the driver's display is operational and the steering can move freely.

NOTE
Damage due to excessive tractive power

If you pull away sharply, the tractive power may be too high and the vehicles could be damaged.

- Pull away slowly and smoothly.

Expert knowledge

Additional functions of buttons

OPENING AND CLOSING THE WINDOWS USING THE AIR-RECIRCULATION BUTTON (CONVENIENCE CLOSING/OPENING)

When the air-recirculation mode is activated, the side windows can be closed automatically, e.g. before entering a tunnel. When the air-recirculation mode is deactivated, the side windows can be moved back to their original position.

WARNING
Risk of entrapment due to not paying attention during convenience closing

When the convenience closing feature is operating, parts of the body could become trapped in the closing area of the side window and the sliding sunroof.

- When the convenience closing feature is operating, monitor the entire closing process and make sure that no body parts are in the closing area.

WARNING
Risk of entrapment due to not paying attention during convenience closing

When the convenience closing feature is operating, parts of the body could become trapped in the closing area of the side windows.

- When the convenience closing feature is operating, monitor the entire closing process and make sure that no body parts are in the closing area.

- **To close windows:** press and hold the button in the climate bar in the central display or the air conditioning control panel until the windows move.

  The windows close and air-recirculation mode switches on.

WARNING
Risk of entrapment from the convenience opening feature

During convenience opening parts of the body could be drawn in or become trapped between the side window and window frame.

- When opening, make sure that nobody is touching the side windows.
- If someone becomes trapped, immediately press the button in the door to open the side windows.
  The side windows stop.
- To continue closing the side windows, pull on the button.

- **To reopen closed windows:** press and hold the button in the climate bar in the central display or the air conditioning control panel until the windows move.
  The windows move back to their original position and air-recirculation mode switches off.

Vehicles with a sliding sunroof: the sliding sunroof closes or opens simultaneously.

IF BODY PARTS BECOME ENTRAPPED IN THE SLIDING SUNROOF:

- **To stop:** press the button.
- **To open:** pull the button back.

RESETTING THE CLIMATE CONTROL SETTINGS

- Press and hold the Climate menu entry on the climate bar of the multimedia system for four seconds.
  The climate control settings will be reset to the basic settings.

ACTIVATING/DEACTIVATING TRAFFIC ANNOUNCEMENTS

Multimedia system:

Radio

- Select TA.
  The traffic information is switched on or off.

Useful vehicle functions

STORING THE PARKING POSITION OF THE FRONT-PASSENGER OUTSIDE MIRROR USING THE MEMORY BUTTON

Requirements

- Reverse gear has not been engaged.

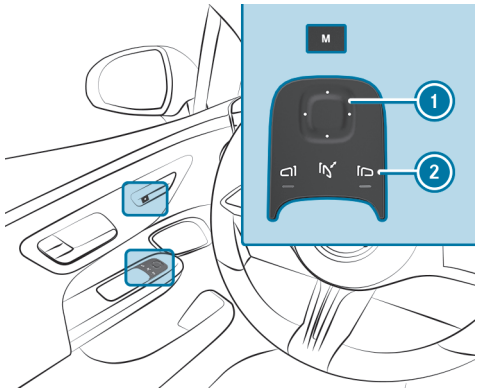

- Use button (2) to select the front-passenger outside mirror.
- Move the front-passenger outside mirror into the desired parking position using button (1).
- Press the M button.

► Confirm immediately using button (1) to store the setting.

ⓘ No more than three seconds may pass between the M button and button (1) being pressed. The mirror adjustment will be cancelled after three seconds.

Tips for on the move

VEHICLE CONDITIONS FOR AUTOMATIC ENGINE STOP OR START

CONDITIONS FOR AUTOMATIC ENGINE STOP:

- The ECO start/stop function is switched on.
- The brake system does not require a running engine.
- The atmospheric air pressure is within the range that is suitable for the system.
- The engine is at normal operating temperature.
- Engine diagnostics are not active.
- The transmission oil temperature is within the range that is suitable for the system.
- The temperature in the vehicle interior is within the set range.
- The fuel tank is sufficiently full.
- The system detects that there is no moisture on the windscreen when the air conditioning system is switched on.
- The system does not detect a steep gradient.
- The bonnet is closed.

CONDITIONS FOR AUTOMATIC ENGINE START:

- The brake system requires a running engine.
- The atmospheric air pressure has exceeded the range that is suitable for the system.
- Engine diagnostics require a running engine.
- The transmission oil temperature has exceeded the range that is suitable for the system.
- The temperature in the vehicle interior deviates from the set range.
- The system detects moisture on the windscreen when the air conditioning system is switched on.

Deactivating the key's function

Vehicles with KEYLESS-GO: if you deactivate the key's function, the KEYLESS-GO functions will also be deactivated. Access or drive authorisation via KEYLESS-GO will then no longer be possible with that key. Activate the function of the key so that all functions are available once again with this key.

You can also deactivate the key's function to reduce the key's energy consumption if you do not use the vehicle or a key for an extended period of time.

► Press and hold the key button.

► With the button pressed, immediately press the key button twice in quick succession.

The indicator lamp of the key lights up once briefly, and then again for longer.

ⓘ **YOU HAVE THE FOLLOWING OPTIONS TO REACTIVATE THE KEY:**

- Press any button on the key.

- Start the vehicle with the key in the marked space in the centre console (⟶ page 328).

Overview of emergency call systems

Both the Mercedes-Benz emergency call system as well as the 112 emergency call system (EU eCall) can help to reduce the time between an accident and the arrival of emergency services at the site of the accident. They help locate an accident site in places that are difficult to access.

Both emergency call systems can initiate an emergency call automatically (⟶ page 685) or manually (⟶ page 686).

Only make emergency calls if you or others are in need of rescue. Do not make an emergency call in the event of a breakdown or a similar situation.

INDICATORS IN THE DISPLAYS

THE FOLLOWING MESSAGES APPEAR ON THE CENTRAL DISPLAY OR THE MEDIA DISPLAY OF BOTH EMERGENCY CALL SYSTEMS:

- SOS NOT READY: the vehicle is not switched on or the emergency call system is malfunctioning. This does not necessarily indicate complete failure of the emergency call system. Emergency calls can still be transmitted.

  The display only refers to the vehicle and does not take account of the availability of mobile phone networks and the Mercedes-Benz emergency call centre.

  The functional readiness of the emergency call system on the vehicle can be seen when the SOS NOT READY display disappears once the vehicle is switched on.
- SOS: the icon appears in the display during an active emergency call.

In case of a malfunction of the emergency call system, the speakers, microphone or airbag, for example, are faulty.
In case of a malfunction of the emergency call system, the speakers, microphone, airbag or the SOS button, for example, are faulty.

YOU CAN RECOGNISE A FAULT IN THE EMERGENCY CALL SYSTEM BY THE FOLLOWING DISPLAYS:

- A corresponding message appears on the driver and media display .

Back to Contents

At a glance

This interactive PDF works like a website – tap or click a button to jump straight to where you want to go.
You can return here at any time via the navigation bar at the top left.

Cockpit (central display)
Cockpit (MBUX Superscreen)
Cockpit (plug-in hybrid)
Indicator lamps and warning lamps (standard)
Indicator lamps and warning lamps (with driver camera)
Overhead control panel
Door operating unit and seat adjustment
Emergencies and breakdowns

Cockpit (central display)

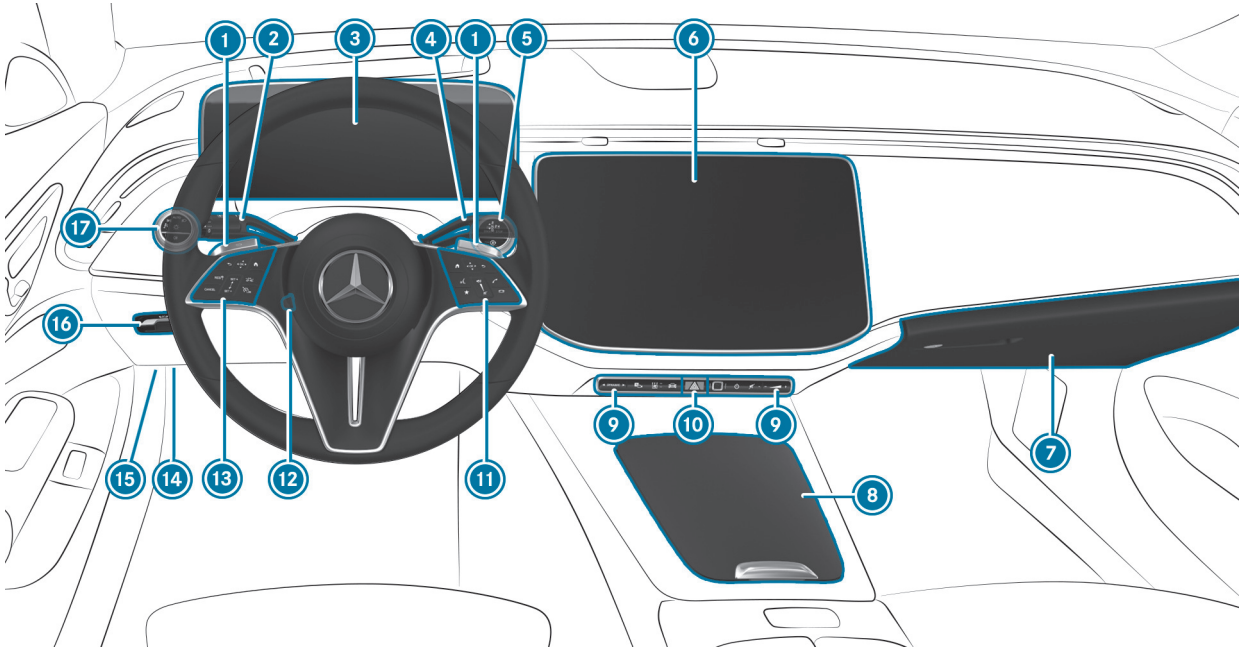

Left-hand-drive vehicles

- 1 Steering wheel gearshift paddles
- 2 Combination switch
- 3 Driver display
- 4 DIRECT SELECT lever
- 5 ENGINE START / STOP Start/stop button
  - ECO start/stop function
- 6 Central display
- 7 Glove box
- 8 Storage compartment
- 9 Switch panel for:
  - DYNAMIC SELECT button
  - Active Parking Assist
  - Switches the stationary heater on/off
  - Quick vehicle access
  - Fingerprint sensor
  - Switches the MBUX multimedia system on/off
  - Switches the sound on/off
  - Adjusts the volume
- 10 Hazard warning light system
- 11 Control panel for the MBUX multimedia system
- 12 Adjusts the steering wheel
- 13 Control panel:
  - Driver display
  - Cruise control or variable limiter
  - LIM Active Distance Assist DISTRONIC
- 14 Diagnostics connection
- 15 Opening the bonnet
- 16 Electric parking brake
- 17 Light switch

Cockpit (MBUX Superscreen)

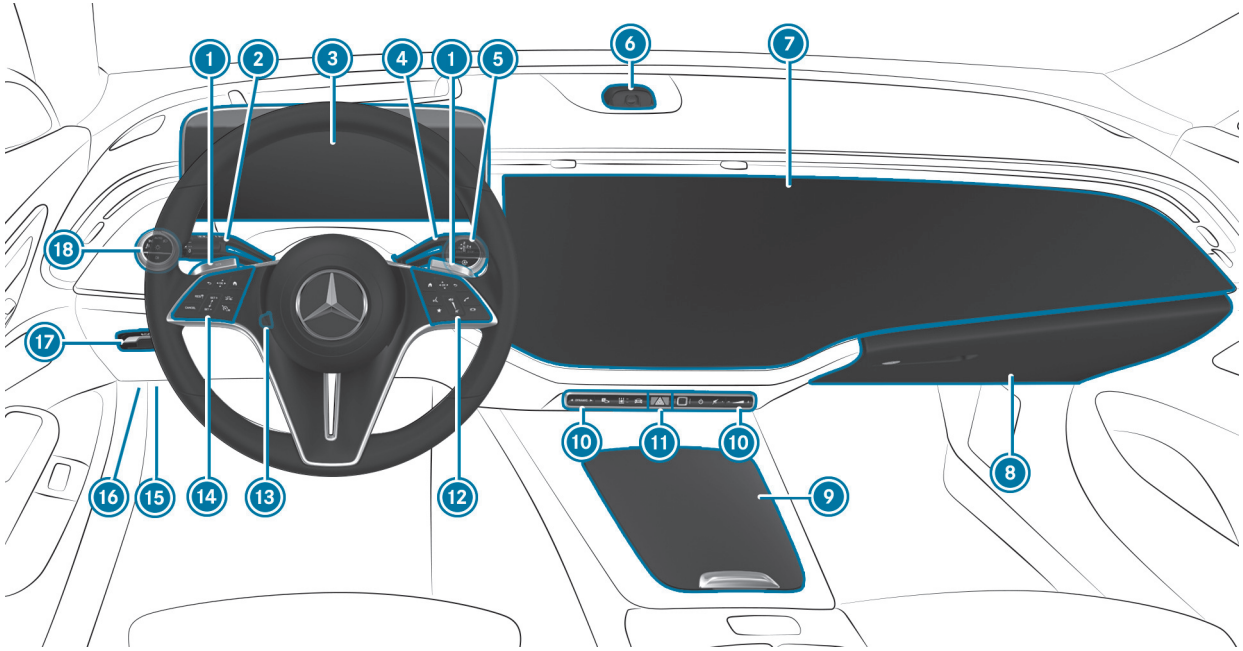

Left-hand-drive vehicles

- 1 Steering wheel gearshift paddles
- 2 Combination switch
- 3 Driver display
- 4 DIRECT SELECT lever
- 5 ENGINE START / STOP Start/stop button
  - ECO start/stop function
- 6 Selfie and video camera
- 7 MBUX Superscreen with:
  - Central display
  - Front passenger display
- 8 Glove box
- 9 Storage compartment
- 10 Switch panel for:
  - DYNAMIC SELECT button
  - Active Parking Assist
  - Switches the stationary heater on/off
  - Quick vehicle access
  - Fingerprint sensor
  - Switches the MBUX multimedia system on/off
  - Switches the sound on/off
  - Adjusts the volume
- 11 Hazard warning light system
- 12 Control panel for the MBUX multimedia system
- 13 Adjusts the steering wheel
- 14 Control panel:
  - Driver display
  - Cruise control or variable limiter
  - LIM Active Distance Assist DISTRONIC
- 15 Diagnostics connection
- 16 Opening the bonnet
- 17 Electric parking brake
- 18 Light switch

Cockpit (plug-in hybrid)

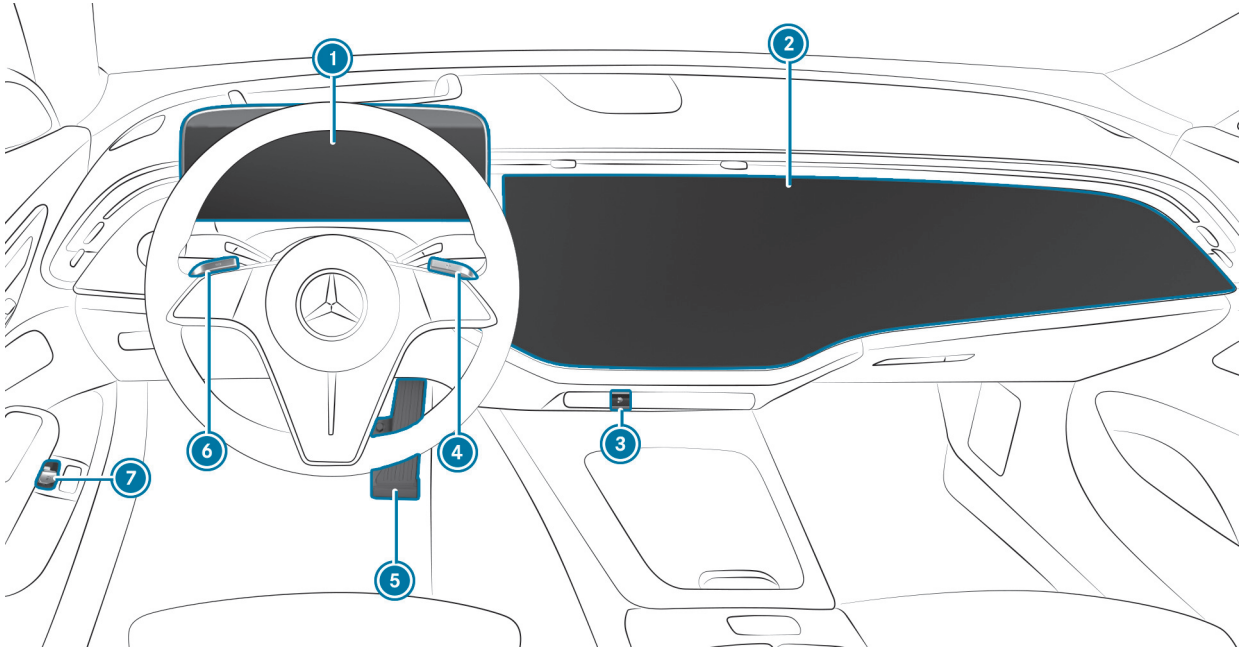

Left-hand drive vehicles

1 Driver display:

- READY Operational readiness
- Power meter
- Trip computer
- ECO Assist

2 MBUX Superscreen with:

- Central display
- Front passenger display

3 Configuring the charging settings

4 + Reduces recuperation

5 Haptic accelerator pedal

6 − Increases recuperation

7 Depressurises and refills the fuel tank

Indicator lamps and warning lamps (standard)

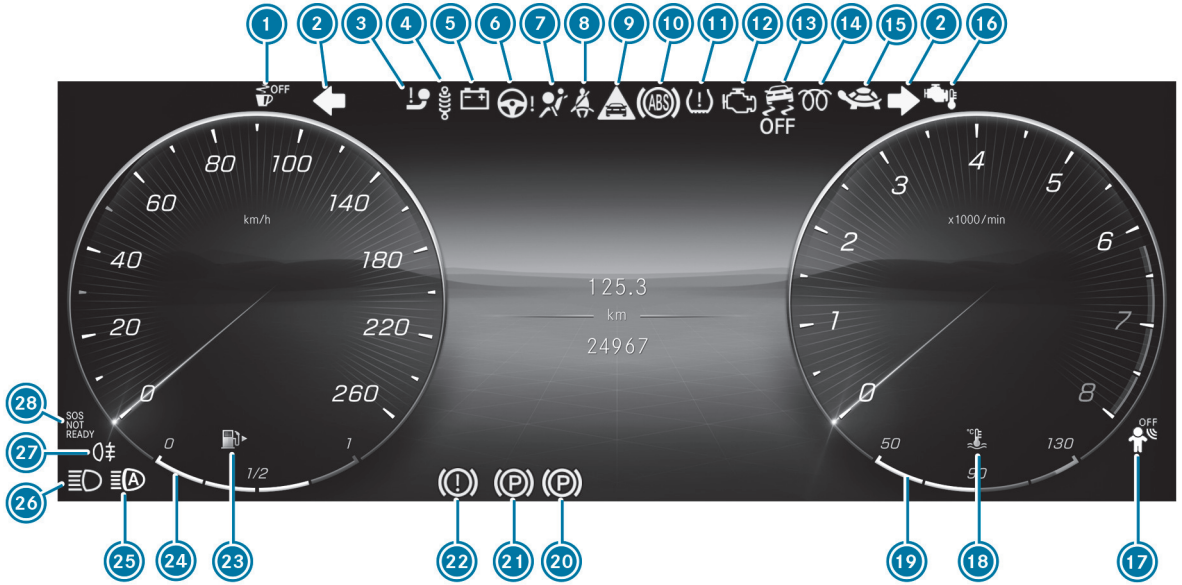

Driver display

- 1 ATTENTION ASSIST
- 2 Turn signal lights
- 3 Trailer hitch
- 4 Suspension (red)
- Suspension (yellow)
- 5 Electrical fault
- 6 Power steering (red)
- Power steering (yellow)
- Rear axle steering (red)
- Rear axle steering (yellow)
- 7 Restraint system
- 8 Seat belt
- 9 Distance warning
- 10 ABS
- 11 Tyre pressure monitoring system
- 12 Engine diagnosis
- 13 ESP® OFF
- ESP®
- 14 Diesel engine: pre-glow
- 15 Drive system: reduced power
- 16 Petrol engine: engine operating temperature
- 17 Occupant presence reminder (white)
- Occupant presence reminder (yellow)
- 18 Coolant temperature
- 19 Coolant temperature display
- 20 Electric parking brake (yellow)
- 21 Electric parking brake (red)
- 22 Brakes (red)
- Brakes (yellow)
- 23 Fuel reserve with fuel filler flap location indicator
- 24 Fuel level
- 25 Adaptive Highbeam Assist
- 26 High beam
- Low beam
- Standing lights
- 27 Rear fog light
- 28 Mercedes-Benz emergency call system

Indicator lamps and warning lamps (with driver camera)

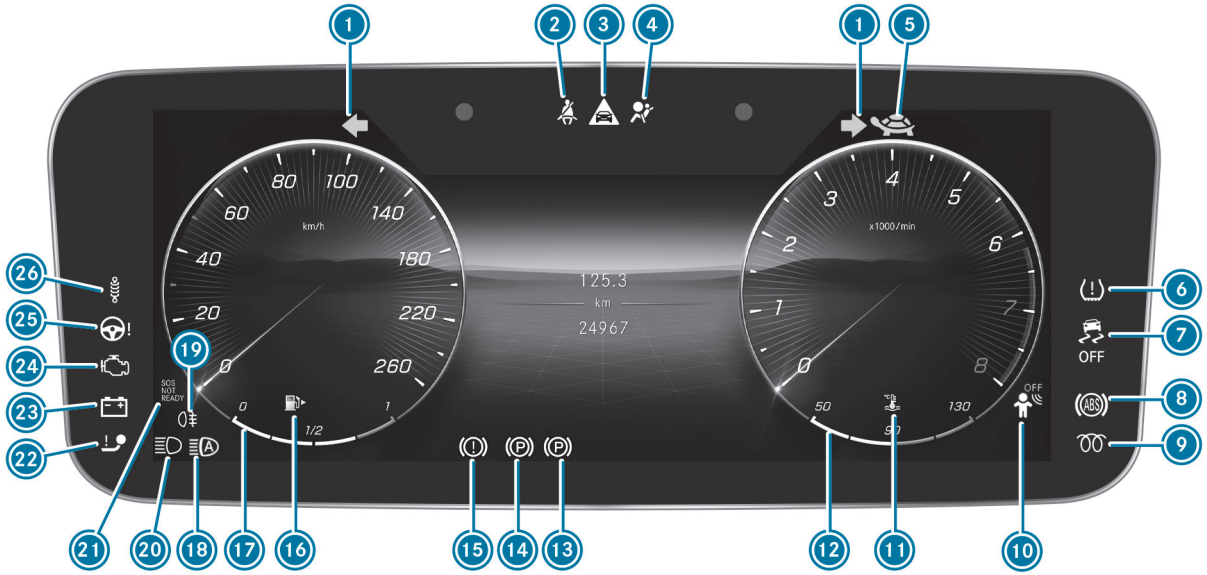

Driver display with driver camera

- 1 Turn signal light
- 2 Seat belt
- 3 Distance warning
- 4 Restraint system
- 5 Drive system: reduced power
- 6 Tyre pressure monitoring system
- 7 ESP® OFF
- ESP®
- 8 ABS
- 9 Diesel engine: pre-glow
- 10 Occupant presence reminder (white)
- Occupant presence reminder (yellow)
- 11 Coolant temperature
- 12 Coolant temperature display
- 13 Electric parking brake (yellow)
- 14 Electric parking brake (red)
- 15 Brakes (red)
- Brakes (yellow)
- 16 Fuel reserve with fuel filler flap location indicator
- 17 Fuel level
- 18 Adaptive Highbeam Assist
- 19 Rear fog light
- 20 High beam
- Low beam
- Standing lights
- 21 Mercedes-Benz emergency call system
- 22 Trailer hitch
- 23 Electrical fault
- 24 Engine diagnosis
- 25 Power steering (red)
- Power steering (yellow)
- Rear axle steering (red)
- Rear axle steering (yellow)
- 26 Suspension (red)
- Suspension (yellow)

Overhead control panel

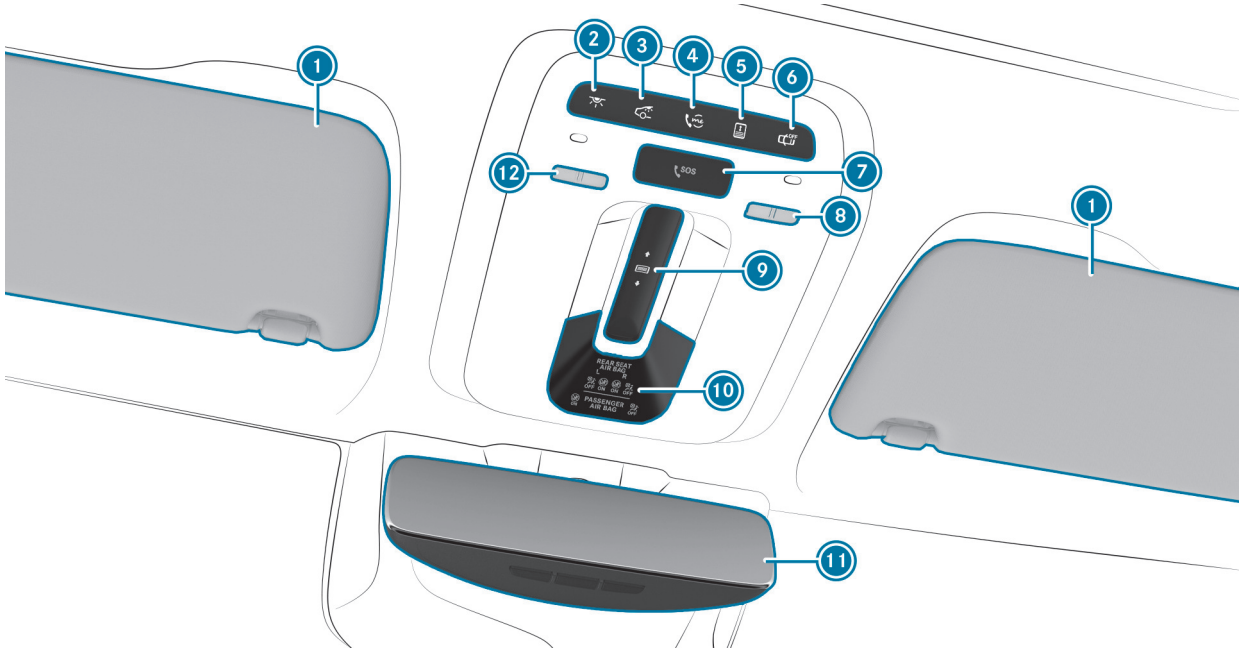

1 Sun visors

2 Switches the front interior lighting on/off >

3 Switches the rear interior lighting on/off >

4 me button >

5 Opens/closes the panorama sliding sunroof rear roller sunblind >

6 Switches automatic interior lighting control on/off >

7 SOS button >

8 Switches the right-hand reading lamp on/off >

9 Opens/closes the panorama sliding sunroof >

Opens/closes the panorama sliding sunroof front roller sun-blind >

10 Indicator lamps:

PASSENGER AIR BAG >

11 Inside rear-view mirror >

12 Switches the left-hand reading lamp on/off >

Door operating unit and seat adjustment

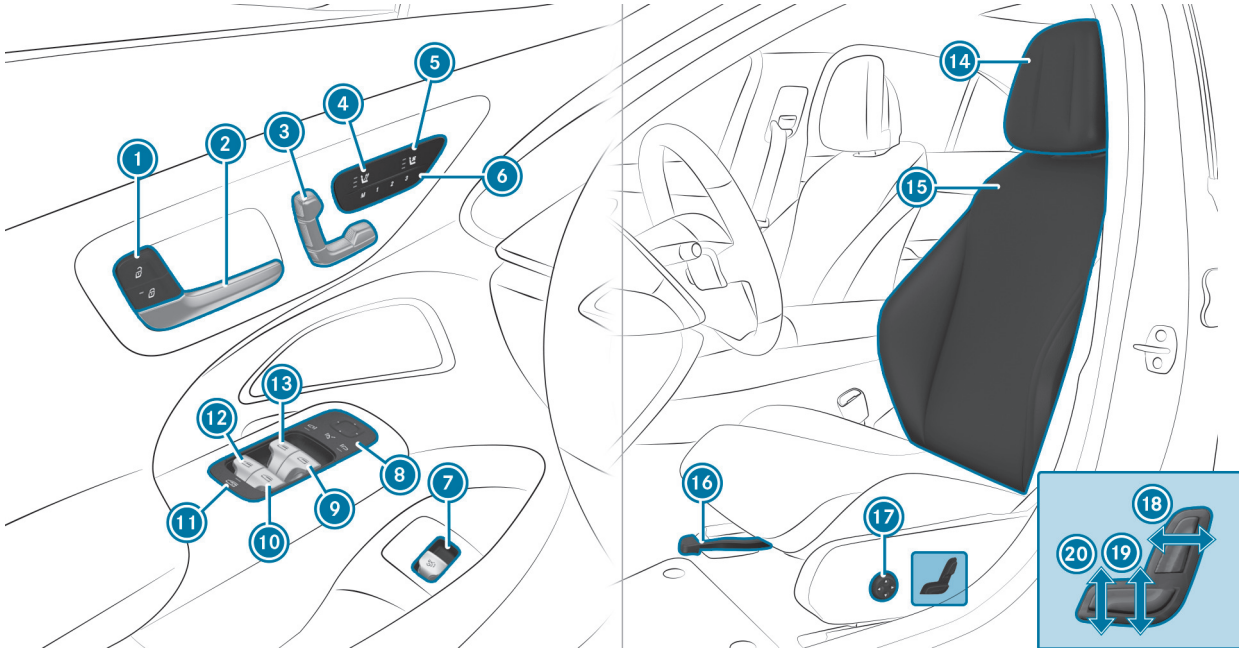

1 Locks/unlocks the vehicle >

2 Opens the door >

3 Adjusts the seats electrically >

4 Switching the seat heating on/off >

5 Switching the seat ventilation on/off >

6 M Operating the memory function >

7 Opens/closes the boot lid >

8 Operating the outside mirrors >

9 Opens/closes the right side window >

10 Opens/closes the rear right side window >

11 Child safety lock for the rear side windows >

12 Opens/closes the rear left side window >

13 Opens/closes the left side window >

14 Adjusting the head restraints >

15 Seat adjustment using the multimedia system >

16 Adjusts the seat fore-and-aft position >

17 Adjusting the 4-way lumbar support >

18 Adjusting the seat backrest inclination >

19 Adjusting the seat height >

20 Adjusts the seat cushion inclination >

Emergencies and breakdowns

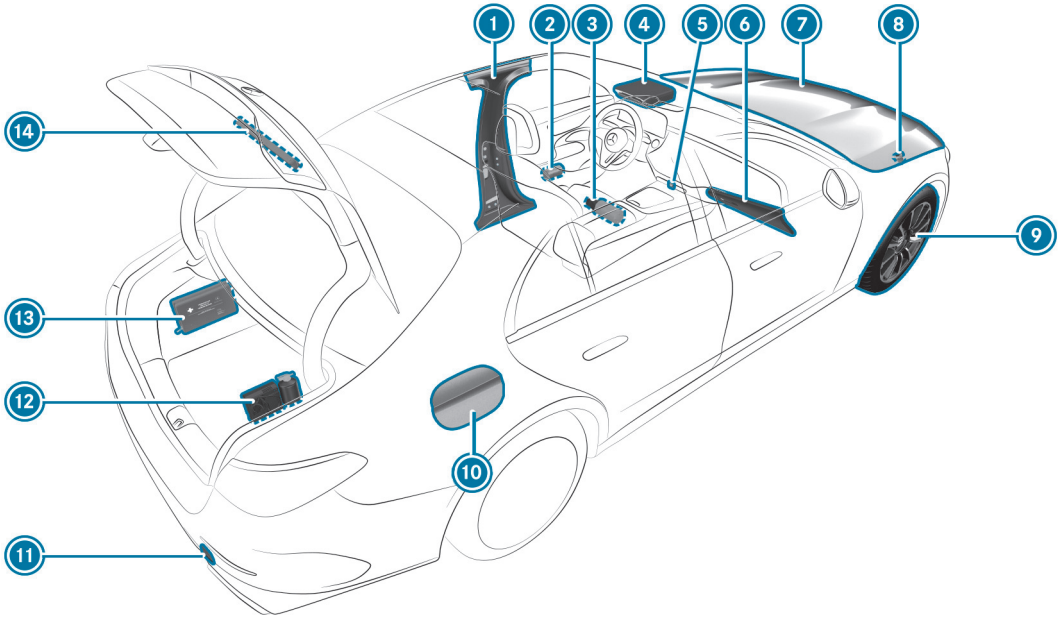

1 B-pillar with:

QR code for accessing the rescue card >

Information label on tyre pressure >

2 Safety vests >

3 Fire extinguisher >

4 me button >

SOS SOS button >

5 Hazard warning light system >

6 Glove compartment >

7 Checking and topping up operating fluids >

Starting assistance >

8 Tow-starting or towing >

9 Flat tyre >

10 Fuel filler flap with:

information label on fuel type >

QR code for accessing the rescue card >

11 Tow-starting or towing >

12 TIREFIT kit >

13 First-aid kit (soft sided) >

14 Warning triangle >

Digital Owner's Manual

This interactive PDF works like a website – tap or click a button to jump straight to where you want to go.
You can return here at any time via the navigation bar at the top left.

Accessing the Digital Owner’s Manual

Accessing the Digital Owner's Manual

Multimedia system:

Settings Info Owner's Manual
Open Digital Owner's Manual

The Digital Owner's Manual describes the functions and operation of the vehicle and the multimedia system.

- Select one of the following menu items in the Digital Owner's Manual:
- Quick start: find the first steps towards adjusting your seat (driver's side).
- Tips: provides you with information on dealing with specific everyday situations in your vehicle.
- Videos: watch animations illustrating the vehicle functions.

  If you do not have any connection to the Internet within the vehicle, you can also scan the displayed QR code to view the animation on your mobile communication device. The data tariff of the mobile communication device is used for the data connection.
- Messages: receive additional information regarding messages on the driver display.
- Language: select the language for the Digital Owner's Manual.

You can search for keywords using the search field Search in order to find quick answers to questions regarding operation of the vehicle.

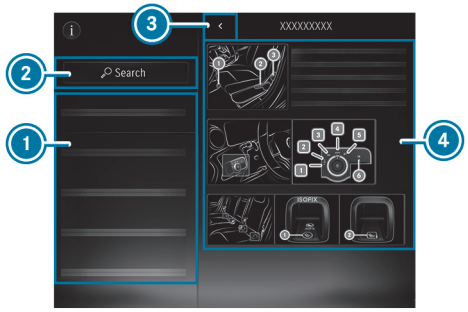

1. Menu
2. Search
3. Back
4. Contents section

Some sections in the Digital Owner's Manual, suchas warning notes, can be expanded and collapsed.

Additional options for calling up the Digital Owner's Manual:

Driver display: Call up concise information regarding display messages on the driver display. Pressing ⓘ will show brief information on the central display.

MBUX Voice Assistant: Call-up via the voice control system

For safety reasons, the Digital Owner’s Manual is deactivated while driving.

General notes

This interactive PDF works like a website – tap or click a button to jump straight to where you want to go.
You can return here at any time via the navigation bar at the top left.

Protection of the environment
Take-back of end-of-life vehicles
Mercedes-Benz GenuineParts
Touch-sensitive control elements
Mercedes-Benz app
Operating safety
Mounting the licence plate onto the front licence plate bracket
Declarations of conformity and country-specific information
Diagnostics connection
Qualified specialist workshop
Vehicle registration
Correct use of the vehicle
REACH regulation
Notes for persons with electronic medical aids
Liability for material defects
QR codes for the rescue card
Data storage
Copyright

Protection of the environment

ENVIRONMENTAL NOTE
Environmental damage due to operating conditions and personal driving style

The pollutant emission of the vehicle is directly related to the way you operate the vehicle.

Operate your vehicle in an environmentally responsible manner to help protect the environment. Please observe the following recommendations on operating conditions and personal driving style.

Operating conditions:

- Make sure that the tyre pressure is correct.
- Do not carry any unnecessary weight (e.g. roof luggage racks once you no longer need them).
- Adhere to the service intervals.
  A regularly serviced vehicle will contribute to environmental protection.
- Always have maintenance work carried out at a qualified specialist workshop.

Personal driving style:

- Do not depress the accelerator pedal when starting the engine.
- Do not warm up the vehicle while stationary.
- Drive carefully and maintain a suitable distance from the vehicle in front.
- Avoid frequent, sudden acceleration and braking.
- Change gear in good time and use each gear only up to ⅔ of its maximum engine speed.
- Switch off the vehicle in stationary traffic, e.g. by using the ECO start/stop function.
- Drive in a fuel-efficient manner. Observe the ECO display for an economical driving style.

PLUG-IN HYBRID

ENVIRONMENTAL NOTE
Environmental pollution caused by irresponsible disposal of the high-voltage battery

A high-voltage battery contains materials which are harmful to the environment.

- ► Dispose of faulty high-voltage batteries at a qualified specialist workshop.

Take-back of end-of-life vehicles

EU COUNTRIES ONLY:
Mercedes-Benz will take back your end-of-life vehicle for environment-friendly disposal in accordance with the European Union (EU) End-Of-Life Vehicles Directive.

A network of vehicle take-back points and dismantlers has been established for you to return your vehicle. You can leave it at any of these points free of charge. This makes an important contribution to closing the recycling circle and conserving resources.

For further information about the recycling and disposal of end-of-life vehicles, and the take-back conditions, please visit the national Mercedes-Benz website for your country.

Mercedes-Benz GenuineParts

ENVIRONMENTAL NOTE
Environmental damage caused by not using recycled reconditioned components

Mercedes-Benz AG offers recycled reconditioned components and parts with the same quality as new parts. The same entitlement from the implied warranty is valid as for new parts.

► Recycled reconditioned components and parts from Mercedes-Benz AG.

NOTE
Impairment of the operating efficiency of restraint systems due to the installation of accessory parts or repairs or welding

AIRBAGS AND SEAT BELT TENSIONERS, AS WELL AS CONTROL UNITS AND SENSORS CAN BE INSTALLED IN THE FOLLOWING AREAS OF THE VEHICLE FOR RESTRAINT SYSTEMS:

- Doors
- Door pillars
- Door sill
- Seats
- Cockpit
- Driver display
- Centre console
- Lateral roof frames

► Do not install accessory parts suchas audio systems in these areas.

► Do not carry out repairs or welding.

► Have accessory parts retrofitted at a qualified specialist workshop.

You could jeopardise operating safety of your vehicle if you use parts, tyres and wheels, or accessories relevant to safety that have not been approved by

Mercedes-Benz. Safety-critical systems (e.g. the brake system) may malfunction. Use only Mercedes-Benz GenuineParts or parts of equal quality. Use only tyres, wheels and accessory parts that have been specifically approved for your vehicle model.

Mercedes-Benz tests original parts, as well as conversion parts and accessory parts that have been specifically approved for your vehicle model for their reliability, safety and suitability. Despite ongoing market research, Mercedes-Benz is unable to assess alternative parts. Mercedes-Benz therefore accepts no responsibility for the use of such parts in Mercedes-Benz vehicles, even if they have been officially approved or independently approved by a testing centre.

Certain parts are only officially approved for installation or modification if they comply with legal specifications. All Mercedes-Benz GenuineParts meet approval requirements. The use of non-approved parts may invalidate the vehicle's operating permit.

THIS WILL APPLY IN THE FOLLOWING SITUATIONS:

- The vehicle type is different from that for which the vehicle's operating permit was granted.
- Other road users could be at risk.
- The exhaust gas levels or noise levels worsen.

Always specify the vehicle identification number (VIN) (⟶ page 860) when ordering Mercedes-Benz GenuineParts.

Touch-sensitive control elements

In addition to conventional switches and buttons, your vehicle is equipped with touch-sensitive control elements.

THESE ARE LOCATED IN THE FOLLOWING AREAS OF YOUR VEHICLE:

- Roof and door operating unit
- Climate control
- Steering wheel
- MBUX multimedia system

The control elements feature touch-sensitive user interface surfaces. These surfaces are controlled by pressing or swiping to adjust settings or trigger functions, forexample.

In the central display area, haptic acknowledgement is relayed through the touch-sensitive surface, forexample in the form of a pulse or a vibration, or a change in user interface surface structure.

Haptic acknowledgement of the central display surface is generated by way of ultrasound.

When engaged in haptic operation of the central display, always ensure ample distance between head and display surface.

HAPTIC ACKNOWLEDGEMENT IS RELAYED IN THE FOLLOWING SITUATIONS, FOREXAMPLE:

- When interacting with control elements on the display surface
- When scrolling in a list or table
- When reaching a new area on the display surface, e.g. a pop-up window, control elements, icons

Despite meticulous development, Mercedes-Benz AG cannot completely rule out the possibility of haptic operation being affected by external microphones.

If you have any questions, contact a qualified specialist workshop.

WHEN USING TOUCH-SENSITIVE USER INTERFACE SURFACES, OBSERVE THE FOLLOWING POINTS TO AVOID OPERATIONAL PROBLEMS:

- Do not affix stickers orsimilar objects on the surfaces
- Do not attach a smartphone- or other holders to the surface of the central display.
- Protect the surfaces against moisture and wet conditions.
- Keep the surfaces free of dust and dirt (⟶ page 733).

In addition to a symbol, some touch-sensitive control elements also feature integrated indicator lamps. Ensure that the symbol of the control element is pressed during use.

Mercedes-Benz app

Notes on Digital Extras

Various functions (Digital Extras) can also be subsequently activated through Mercedes-Benz following purchase of your vehicle.

Should you have any queries in this regard, please consult a Mercedes-Benz Service Centre.

Ordering and activating Digital Extras

Requirements:

- The vehicle has a wireless connection.
- The vehicle is linked to the user's Mercedes-Benz account.

ORDERING AND ACTIVATING DIGITAL EXTRAS

- ► Place the Digital Extra that you would like to purchase for your vehicle in your shopping basket in the Mercedes-Benz Store.
- ► Complete the order.
  The Digital Extra will be activated while you are using the vehicle.

SPEEDING UP ACTIVATION

- ► Switch off and lock the vehicle.
- ► Unlock the vehicle after about two minutes and switch on the vehicle.
  The Digital Extra will be activated. For some features, a notification will also appear in the vehicle's multimedia system.

If activation was not successful, repeat the process.

Operating safety

WARNING
Risk of accident due to malfunctions or system failures

If you do not have the prescribed service/maintenance work or any required repairs carried out, this could result in malfunctions or system failures.

- Always have the prescribed service- and maintenance work or any required repairs carried out in a qualified workshop.

WARNING
Risk of accident or injury due to improper modifications to electronic components

Modifications to electronic components, their software or wiring can impair their functionality and/or the functionality of other networked components or safety-relevant systems.

This can endanger the vehicle's operating safety.

- You must not tamper with wiring, electronic components, or their software.
- Always have work on electrical and electronic devices carried out at a qualified specialist workshop.

If you modify the on-board electronics, the general operating permit is rendered invalid.

Observe the "On-board electronics" section in "Technical data".

WARNING
Risk of fire due to flammable material coming into contact with hot parts of the exhaust system

If combustible materials, e.g. leaves, grass or twigs, come into contact with hot parts of the exhaust system, they may ignite.

- When driving off-road or on unpaved surfaces, check the underside of the vehicle at regular intervals.
- In particular, remove any trapped parts of plants or other flammable material.
- If damage should occur, immediately inform a qualified specialist workshop.

NOTICE
Damage to the vehicle due to driving too fast and due to impacts to the underbody or suspension components

IN THE FOLLOWING SITUATIONS IN PARTICULAR, THERE IS A RISK OF DAMAGE TO THE VEHICLE:

- The vehicle makes contact with the ground, e.g. on a high kerb or unpaved road.
- The vehicle is driven too fast over an obstacle, e.g. a kerb, speed bump or pothole.
- A heavy object strikes the underbody or suspension components.

In situations such as these, damage to the body, underbody, suspension components, wheels or tyres may not be visible. Components damaged in this way can unexpectedly fail or, in the case of an accident, may no longer absorb the impact force as intended.

If the underbody panelling is damaged, flammable materials, such as leaves, grass or twigs may accumulate between the underbody and the underbody panelling. If these materials come into contact with hot components of the exhaust system, they may ignite.

► Have the vehicle checked and repaired immediately at a qualified specialist workshop.

or

► If driving safety is impaired while continuing your journey, pull over and stop the vehicle immediately, with due attention to road and traffic conditions, and contact a qualified specialist workshop.

PLUG-IN HYBRID
Hybrid vehicles have a combustion engine and at least one electric motor. The energy supply for operating the vehicle electrically is provided by the high-voltage on-board electrical system.

DANGER
Risk of death and fire due to modified and/or damaged components of the high-voltage on-board electrical system

The vehicle's high-voltage on-board electrical system is under high voltage. If you modify component parts in the vehicle's high-voltage on-board electrical system or touch damaged component parts, you may be electrocuted. In addition, modified and/or damaged components may cause a fire.

In the event of an accident or impact to the underbody, components of the high-voltage on-board electrical system may be damaged although the damage is not visible.

- Never make any modifications to the high-voltage on-board electrical system.
- Do not switch on or use the vehicle if its high-voltage on-board electrical system components have been modified or damaged.
- Never touch damaged components of the high-voltage on-board electrical system.
- After an accident, do not touch any components of the high-voltage on-board electrical system.
- After an accident, have the vehicle transported away.
- Have the components of the high-voltage on-board electrical system checked at a qualified specialist workshop and replaced if necessary.

The components of the high-voltage on-board electrical system are marked with yellow warning stickers. The cables of the high-voltage on-board electrical system are orange.

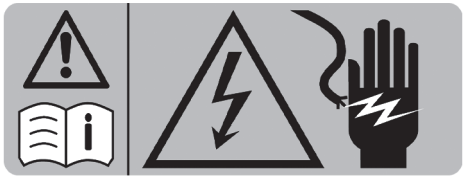

Example

High-voltage components that can become very hot are marked with a separate warning sticker:

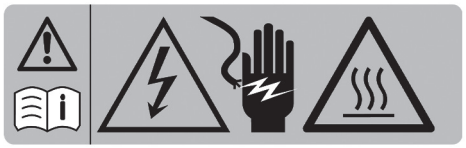

Vehicles with hybrid systems generate significantly less noise than vehicles with combustion engines.

In electric mode, other road users may fail to hear the vehicle owing to its significantly lower driving noise.

It is for this reason that the vehicle is equipped with a sound generator, which serves as an acoustic vehicle alerting system (AVAS). This protective measure is prescribed by law.

This exterior noise by the sound generator (AVAS) is audible in the vehicle interior at low speeds, and is not a malfunction.

VEHICLES WITH 48 V ON-BOARD ELECTRICAL SYSTEM

DANGER
Risk of fatal injury by touching damaged high-voltage components

Vehicles with a 48 V on-board electrical system contain individual high-voltage components. These high-voltage components are under high voltage.

If you modify component parts of these high-voltage components or touch damaged component parts, you may be electrocuted.

High voltage components may be damaged in an accident, although the damage may not be visible.

- Never perform modifications to component parts of high-voltage components.
- Never touch damaged component parts of high-voltage components.
- Never touch component parts of high-voltage components after an accident.

Vehicles with a 48 V on-board electrical system contain high-voltage components. These components are marked with a high-voltage label:

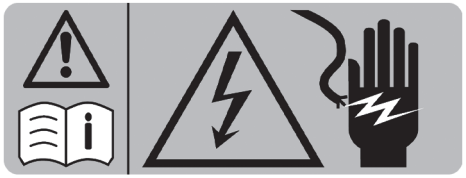

Example

All work on high-voltage components must be carried out at a qualified specialist workshop.

Mounting the licence plate onto the front licence plate bracket

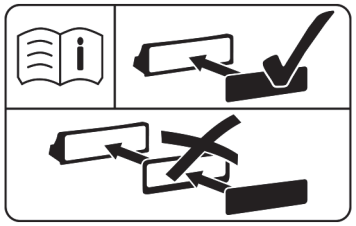

The information label can be found on the licence plate bracket, either embossed or in sticker form.

NOTE

Malfunctions and system failures due to incorrect assembly of the licence plate on the front licence plate holder

If the licence plate is incorrectly assembled on the front licence plate holder, sensors, cameras or driving and safety systems may malfunction or fail.

Observe the following points when assembling the licence plate on the front licence plate holder:

- Assemble the licence plate directly on the licence plate holder without advertising media or other holders.
- Assemble the licence plate so that it does not protrude above or to the side of the licence plate adapter.

Declarations of conformity and country-specific information

Electromagnetic compatibility

The electromagnetic compatibility of the vehicle components has been checked and certified according to the currently valid version of Regulation UN-R 10.

Country-specific information for regulatory radio components

INFORMATION REGARDING MODIFICATIONS TO RADIO COMPONENTS
Modifications to radio components may invalidate the general operating permit for the radio component in question. The radio component manufacturer shall accept no responsibility for such modifications.

INFORMATION REGARDING CROSSING NATIONAL BORDERS
You must observe the radio regulatory provisions for the country in which you are currently driving when operating the vehicle.

WIRELESS VEHICLE COMPONENTS
Only for EU and EFTA countries and countries that recognise the EU manufacturer's declaration of conformity:

CE

The following information applies to all wireless components of the vehicle and of the information systems and communication devices integrated in the vehicle:

The manufacturers of the wireless components ensure that all wireless components installed in the vehicle comply with Directive 2014/53/EU. The full texts of the EU declarations of conformity are available at the following web address:

https://certificates-of-conformity.corpinter.net/en

You can obtain further information from a Mercedes-Benz Service Centre.

FOR ISRAEL ONLY:
It is prohibited to make any change to a vehicle-installed radio component that could affect the wireless specifications of the device, including software changes, replacement of the original antenna, or adding the option to connect the device to an external antenna, without first obtaining approval from the Communica-tions Ministry, because of concern about wireless interference.

FOR THE UNITED KINGDOM ONLY:

UK CA

The following information applies to all wireless components of the vehicle and of the information systems and communication devices integrated in the vehicle:

The manufacturers of the radio components declare that all radio equipment installed in the vehicle is in compliance with the relevant statutory requirements. The full texts of the declarations of conformity are available at the following web address:

https://certificates-of-conformity.corpinter.net/en

FOR BRAZIL ONLY:

ANATEL

Note on two-way radio systems in the vehicle:

These systems are not protected against harmful interference and must not cause interference in properly approved systems.

More information is available on the ANATEL website. www.anatel.gov.br

FOR JAMAICA ONLY:
All wireless vehicle components have received a type-approval certificate from the SMA.

FOR NIGERIA ONLY:

Connection and use of this communications equipment is permitted by the Nigerian Communications Commission

Connection and use of the radio communications equipment in this vehicle is permitted by the Nigerian Communications Commission

FOR COUNTRIES OF THE EURASIAN ECONOMIC UNION ONLY:

EAC

The manufacturers of the wireless components installed in the vehicle hereby declare that all wireless components installed in the vehicle comply with the technical specifications for two-way radios. You can obtain further information from a Mercedes-Benz Service Centre.

FOR UKRAINE ONLY:

The manufacturers of the wireless components installed in the vehicle hereby declare that the wireless components installed in the vehicle comply with the

technical regulations for two-way radios. You can obtain further information from a Mercedes-Benz service centre.

Battery

FOR EU COUNTRIES AND COUNTRIES THAT RECOGNISE THE EU MANUFACTURER'S DECLARATION OF CONFORMITY:

CE

As soon as the applicable stipulations under Regulation (EU) 2023/1542 come into effect, the required information for all 48 V and high-voltage batteries in the vehicle will be available from the following website:

https://certificates-of-conformity.corpinter.net/en

Jack

ONLY FOR EU AND EFTA COUNTRIES AND COUNTRIES THAT RECOGNISE THE EU MANUFACTURER'S DECLARATION OF CONFORMITY:

CE

The following information applies for the jack:

The manufacturer of the jack guarantees that the jack complies with the guideline 2006/42/EC. A complete text of the EU Declaration of Conformity can be obtained by visiting the following website:

https://certificates-of-conformity.corpinter.net/en

You can obtain further information from a Mercedes-Benz Service Centre.

FOR THE UNITED KINGDOM ONLY:

UK CA

The following information applies for the jack:

The manufacturer of the jack guarantees that the jack complies with the Supply of Machinery (Safety) Regulations 2008 . A complete text of the UKCA Declaration of Conformity can be obtained by visiting the following website:

https://certificates-of-conformity.corpinter.net/en

TIREFIT kit

ONLY FOR EU AND EFTA COUNTRIES AND COUNTRIES THAT RECOGNISE THE EU MANUFACTURER'S DECLARATION OF CONFORMITY:

CE

The following information applies for the TIREFIT kit:

The manufacturer of the TIREFIT KIT guarantees that the TIREFIT KIT complies with the guideline 2014/30/EU. A complete text of the EU Declaration of Conformity can be obtained by visiting the following website:

https://certificates-of-conformity.corpinter.net/en

You can obtain further information from a Mercedes-Benz Service Centre.

FOR THE UNITED KINGDOM ONLY:

UK CA

The following information applies for the TIREFIT KIT:

The manufacturer of the TIREFIT KIT guarantees that the TIREFIT KIT complies with the Electromagnetic Compatibility Regulations 2016. A complete text of the UKCA Declaration of Conformity can be obtained by visiting the following website:

https://certificates-of-conformity.corpinter.net/en

Diagnostics connection

The diagnostics connection is a technical interface in the vehicle. It is used, forexample, within the scope of repair and servicing work or for reading out vehicle data in a specialist workshop. Diagnostic devices should therefore only be connected at a qualified specialist workshop.

WARNING
Risk of accident as a result of connecting devices to the diagnostics connection

If you connect devices to the vehicle's diagnostics connection, functioning of vehicle systems and operational safety can become impaired.

- ► It is recommended for safety reasons that only products which have been approved by a Mercedes-Benz service centre be used and connected.

WARNING
Risk of accident due to objects in the driver's footwell

Objects in the driver's footwell may impede pedal travel or block a depressed pedal.

This will jeopardise the operating and road safety of the vehicle.

- ► Stow all objects in the vehicle securely so that they cannot get into the driver's footwell.
- ► Make sure that there is always sufficient clearance for the pedals.
- ► Always fit the floor mats securely and as prescribed.
- ► Do not use loose floor mats and do not place floor mats on top of one another.

NOTE
Battery discharging from using devices connected to the diagnostics connection

Using devices at the diagnostics connection drains the battery.

- ► Check the charge level of the battery.
- ► If the charge level is low, charge the battery, e.g. by driving a considerable distance.

Please also note the information about the 12 V battery and short-distance trips in the "Driving and Parking" section (⟶ page 333).

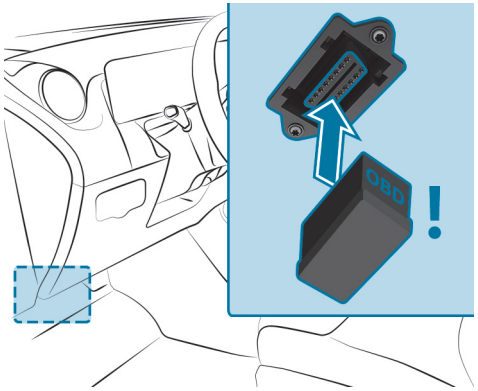

CONNECTING AND USING ANOTHER DEVICE WITH THE DIAGNOSTICS CONNECTION CAN HAVE THE FOLLOWING CONSEQUENCES:

- Malfunctions in the vehicle system
- Permanent damage to vehicle components

Please refer to the warranty terms and conditions in this regard.

Moreover, connecting equipment to the diagnostics connection can lead to emissions monitoring information being reset, forexample. This may lead to the vehicle failing to meet the requirements of the next emissions inspection during the main inspection.

Qualified specialist workshop

A qualified specialist workshop has the necessary special skills, tools and qualifications to correctly carry out any necessary work on your vehicle. This particularly applies to safety-critical work.

ALWAYS HAVE THE FOLLOWING WORK CARRIED OUT ON YOUR VEHICLE AT A QUALIFIED SPECIALIST WORKSHOP:

- Safety-critical work
- Service and maintenance work
- Repair work
- Modifications as well as installations and conversions
- Work on electronic components
- **Plug-in hybrid:** work on the hybrid system
- **Vehicles with 48 V on-board electrical system:** work on the high-voltage component of the 48 V on-board electrical system

Mercedes-Benz recommends a Mercedes-Benz service centre.

Vehicle registration

Mercedes-Benz may ask its service centres to carry out technical inspections on certain vehicles. The quality or safety of the vehicle will be improved as a result of the inspection.

Mercedes-Benz can only inform you about vehicle inspections if Mercedes-Benz has your registration data.

IT IS POSSIBLE THAT YOUR VEHICLE HAS NOT YET BEEN REGISTERED IN YOUR NAME IN THE FOLLOWING CASES:

- if your vehicle was not purchased from an authorised specialist dealer.
- if your vehicle has not yet been inspected at a Mercedes-Benz service centre.

It is advisable to register your vehicle with a Mercedes-Benz service centre.

Notify Mercedes-Benz as soon as possible of any change of address and/or change of vehicle ownership. You can do this at a Mercedes-Benz service centre, forexample.

Correct use of the vehicle

If you remove any warning stickers, you or others could fail to recognise potential dangers. Leave all warning stickers in their designated positions.

OBSERVE THE FOLLOWING INFORMATION IN PARTICULAR WHEN DRIVING YOUR VEHICLE:

- The safety notes in this Owner's Manual, vehicle-specific supplements and further supplementary documents
- Technical data for the vehicle
- Traffic rules and -regulations of the country you are currently in
- Motor vehicle laws and safety standards of the country you are currently in
- Radio regulatory requirements of the country you are currently in

REACH regulation

For EU and EFTA countries only:

The REACH Regulation (Regulation (EC) No. 1907/2006, Article 33) stipulates a duty to supply information about substances of very high concern (SVHCs).

Mercedes-Benz AG acts to the best of its knowledge to prevent these SVHCs from being used and to enable customers to safely handle these substances. According to supplier information and internal product information, there are SVHCs known to Mercedes-Benz AG that are found in individual components of this vehicle in quantities of over 0.1 percent by weight.

FURTHER INFORMATION CAN BE OBTAINED AT THE FOLLOWING ADDRESSES:

- https://reach.mercedes-benz.com/de/home/
- https://reach.mercedes-benz.com/en/home/

Notes for persons with electronic medical aids

Despite meticulous development of their vehicle systems, Mercedes-Benz AG cannot completely rule out the interaction of vehicle systems with electronic medical aids, suchas cardiac pacemakers.

In addition, there are components installed in the vehicle that can generate magnetic fields on a par with permanent magnets, regardless of the operating status of the vehicle. These fields may occur in the area around the multimedia system and sound system, forexample, or in the area around the seats, depending on the respective vehicle equipment.

IN SOME CASES, THIS COULD RESULT IN THE FOLLOWING, DEPENDING ON THE AIDS USED:

- Medical aids malfunctioning
- Adverse health effects

Note the information and warnings from the manufacturer of the auxiliary equipment, and in case of uncertainty, please consult the manufacturer of the auxiliary equipment and/or your doctor. If there is continuing uncertainty concerning the possibility of medical aids malfunctioning, Mercedes-Benz AG recommends using fewer electrical vehicle systems and/or maintaining a distance from the components.

Plug-in hybrid

WHEN CHARGING THE HIGH-VOLTAGE BATTERY, KEEP A DISTANCE OF AT LEAST AN ARM'S LENGTH BETWEEN THE MEDICAL AID AND THE FOLLOWING COMPONENTS:

- the power supply equipment
  This includes charging stations in the form of a wallbox or a public charging point, forexample.
- vehicle components carrying live voltage
  This includes the charging cable and the charging control box, forexample.

ALWAYS HAVE REPAIRS AND MAINTENANCE WORK IN THE AREA OF THE FOLLOWING COMPONENTS CARRIED OUT AT A QUALIFIED SPECIALIST WORKSHOP:

- vehicle components carrying live voltage
- transmission aerials
- multimedia system and sound system

If you have any queries or suggestions, consult a qualified specialist workshop.

Liability for material defects

NOTE
Damage to the vehicle due to failure to follow instructions in this Owner's Manual.

Damage to the vehicle can arise due to failure to follow instructions in this Owner's Manual.

This damage is not covered either by the Mercedes-Benz liability for material defects or by the New- or Used-Vehicle Warranty.

- Observe the notes on correct operation of the vehicle as well as possible vehicle damage in this Owner's Manual.

QR codes for the rescue card

QR codes are attached in the fuel filler flap and on the opposite side on the B-pillar. In the event of an accident, rescue services can use the QR code to quickly find the appropriate rescue card for your vehicle. The current rescue card contains the most important information about your vehicle (e.g. the routing of the electric lines) in compact form.

Additional information can be obtained at: https://rk.mb-qr.com/de/

Data storage

Data processing in the vehicle

ELECTRONIC CONTROL UNITS
Electronic control units are fitted in your vehicle. Control units process data they receive, generate themselves or exchange with each other, forexample from vehicle sensors. Some control units are required for the safe operation of your vehicle. Some assist you when driving, suchas driver assistance systems, while others enable convenience or infotainment functions.

The following section provides general information about data processing in the vehicle. Additional information regarding which vehicle data is collected, saved and transmitted to third parties and for what purpose can be found in the information directly related to the relevant functional characteristics in the respective Owner's Manual. This information is available online and digitally, depending on the vehicle's equipment.

PERSONAL DATA
A unique vehicle identification number identifies every vehicle. Depending on the country, this vehicle identification number can also be used to determine the identity of the vehicle keeper, forexample by the authorities. There are also other ways of tracing data collected from the vehicle back to the keeper or driver, suchas the licence plate number.

The data generated or processed by control units may therefore be attributable to a person or, in certain circumstances, become attributable to a person. Depending on which vehicle data is available, it may be possible to make inferences about, forexample, your driving behaviour, location, route or use patterns.

LEGAL REQUIREMENTS REGARDING THE DISCLOSURE OF DATA
If legally required to do so, manufacturers are generally obliged to provide the authorities with data stored by the manufacturer upon request and to the extent required. Forexample, this may be the case during the investigation of a criminal offence.

State authorities are themselves authorised to read out data from the vehicle in individual cases and within the applicable legal framework. In the case of an accident, information that can help with an investigation can be taken from the airbag control unit, forexample.

OPERATIONAL DATA IN THE VEHICLE
To operate the vehicle, control units process data.

THIS INCLUDES THE FOLLOWING DATA, FOREXAMPLE:

- Vehicle status information suchas the speed, longitudinal acceleration, lateral acceleration, number of wheel revolutions or the fastened seat belts display
- Ambient conditions, suchas temperature, rain sensor or distance sensor

Generally, this data is volatile and will not be stored beyond the period of operation and will only be processed within the vehicle itself. Control units, forexample, vehicle keys, often contain data memories. Their use permits the temporary or permanent documentation of technical information about the vehicle's operating state, component loads, maintenance requirements and technical events or faults.

DEPENDING ON THE TECHNICAL EQUIPMENT, THE FOLLOWING DATA IS STORED:

- Operating status of system components, suchas fill levels, tyre pressure or battery status
- Malfunctions or faults in important system components, suchas lights or brakes
- System reactions in special driving situations, suchas an airbag deployment or the intervention of stability control systems
- Information on events leading to vehicle damage

In certain cases, storing data that would have otherwise been temporary may be required. This may be the case if the vehicle has detected a malfunction, forexample.

If you make use of services, e.g. repair services or maintenance work,– the stored operating data can be read out and used together with the vehicle identification number – if necessary.

Service network employees suchas workshops and manufacturers, and third parties suchas breakdown services can read out the data. The same is true in the event of warranty claims and quality assurance measures.

In general, the readout is performed via the legally prescribed port for the diagnostics connection in the vehicle. The selected operating data document the vehicle's or individual components' technical conditions, help with fault diagnosis, compliance with warranty obligations and quality improvement. To that end, these data, particularly information about component loads, technical events, malfunctions and other faults, may be transmitted to the manufacturer along with the vehicle identification number. Furthermore, the manufacturer is subject to product liability. For this reason, the manufacturer also uses operational data from the vehicle, e.g. for recalls. This data can also be used to review the customer's warranty and guarantee claims.

Fault memories in the vehicle can be reset by a service outlet or at your request as part of repair or maintenance work.

CONVENIENCE AND INFOTAINMENT FUNCTIONS
You can store the vehicle's convenience and individual settings and change or reset them at any time.

DEPENDING ON THE VEHICLE EQUIPMENT, THIS INCLUDES THE FOLLOWING SETTINGS, FOREXAMPLE:

- Seat and steering wheel positions
- Suspension tuning and climate control settings
- Individual settings, suchas interior lighting

Depending on the selected equipment, you can import data into vehicle infotainment functions yourself.

DEPENDING ON THE VEHICLE EQUIPMENT, THIS INCLUDES THE FOLLOWING DATA, FOREXAMPLE:

- Multimedia data, suchas music, films or photos for playback in an integrated multimedia system
- Address book data for use in connection with an integrated hands-free system or an integrated navigation system
- Entered navigation destinations
- Data about the use of Internet services

This data for convenience and infotainment functions may be saved locally in the vehicle or on a device connected to the vehicle, suchas a smartphone, USB flash drive or MP3 player. If you have entered this data yourself, you can delete it at any time.

This data is transmitted only from the vehicle to third parties at your request. This applies in particular for the use of online services based on the settings you have selected yourself.

SMARTPHONE INTEGRATION (E.G. ANDROID AUTO OR APPLE CARPLAY®)
If your vehicle is equipped accordingly, you can connect your smartphone or another mobile end device to the vehicle. You can then control them using the control elements integrated into the vehicle. Images and audio from the smartphone can be output via the multimedia system. Certain information is simultaneously transferred to your smartphone. Depending on the type of integration, thisincludes position data, day/night mode and other general vehicle states. For more information, please consult the vehicle Owner's Manual/infotainment system.

This integration allows the use of selected smartphone apps, suchas navigation or music player apps. There is no further interaction between the smartphone and the vehicle; in particular, vehicle data is not directly accessible. The type of additional data processing is determined by the provider of the app being used. The settings you can make, if any, depend on the specific app and your smartphone's operating system.

Online services

WIRELESS NETWORK CONNECTION
If your vehicle has a wireless network connection, it enables data to be exchanged between your vehicle and additional systems. The wireless network connection is made possible by the vehicle's own transmitter and receiver or by a mobile end device that you have brought into the vehicle, forexample, a smartphone. Online functions can be used via the wireless network connection. This includes online services and applications/apps provided to you by the manufacturer or by other providers.

MANUFACTURER'S SERVICES
Regarding the manufacturer's online services, the individual functions are described by the manufacturer in a suitable place, forexample, in the Owner's Manual or on the manufacturer's website, where the relevant data protection information is also given. Personal data may be used for the provision of online services. Data are exchanged via a secure connection, suchas the manufacturer's designated IT systems. Any personal data which are collected, processed and used, other than for the provision of services, is done so exclusively on the basis of legal permission. This is the case, forexample, for a legally prescribed emergency call system, a contractual agreement or when consent has been given.

You can have services and functions, some of which are subject to a fee, activated or deactivated. This excludes legally prescribed functions and services, suchas an emergency call system.

THIRD PARTY SERVICES
If you use online services from other providers (third parties), these services are the responsibility of the provider in question and subject to that provider's data protection conditions and terms of use. As a general rule, the manufacturer has no influence on the content exchanged.

For this reason, when services are provided by third parties, please ask the service provider in question for information about the type, extent and purpose of the collection and use of personal data.

Data protection rights

Depending on your country or the equipment and range of functions of your vehicle as well as the services you use and the services on offer, you are entitled to different data protection rights. Further information on data protection and your data protection rights can either be found on the manufacturer's website or you will receive this information as part of the various services

and service offers. There you will also find the contact information for the manufacturer and its data protection officers.

At a workshop, forexample, with the support of a specialist and possibly for a fee, you can have data read out which is stored only locally in the vehicle.

Copyright

FREE AND OPEN SOURCE SOFTWARE
Information pertaining to licences for free and Open Source Software applicable for your vehicle, including updates, can be obtained online at:

https://www.mercedes-benz.com/opensource

Back to Contents

Occupant safety

This interactive PDF works like a website – tap or click a button to jump straight to where you want to go.
You can return here at any time via the navigation bar at the top left.

Brief overview of most important points
Information on the automatic functions of the restraint system
Purpose and function of the restraint system
Seat belts
Airbags

Brief overview of most important points

Basic information

IN PARTICULAR ENSURE THE FOLLOWING CONDITIONS TO ENABLE THE COMPONENTS OF THE RESTRAINT SYSTEM TO UNFOLD THEIR PROTECTIVE POTENTIAL:

- Sit correctly (⟶ page 140).
- Fasten seat belts correctly (⟶ page 141).
  - Function of the seat belt warning lamp (⟶ page 144).
  - Function of the rear seat belt status display (⟶ page 144).
- The restraint system warning lamp has gone out after the self-test (⟶ page 144).
- The PASSENGER AIR BAG indicator lamps display the correct status of the front passenger airbag (⟶ page 146).

FOR CLEAR UNDERSTANDING

The chapter "Occupant safety" includes information on equipment, functions and behaviours that contribute directly to safety of vehicle occupants.

THE INFORMATION IS STRUCTURED AS FOLLOWS:

- **The most important information in brief:** in this chapter, you are provided with an overview of the relationship between the restraint system and the correct behaviour of all vehicle occupants.
- **Specific information:** in further sections of the chapter "Occupant safety", you can find specific information on the equipment and functions of the restraint system.
- **Keyword search:** You can also find specific topics using the search field in the Digital Owner's Manual.

INFORMATION ON THE FOLLOWING SUBJECTS, AMONG OTHERS, IS NOT PROVIDED IN THE CHAPTER "OCCUPANT SAFETY":

- Children in the vehicle (⟶ page 163)
- Driving systems and driving safety systems (⟶ page 412)
- Stowage options (⟶ page 256)

DEFINING GENERIC TERMS CLEARLY

IN THIS OWNER'S MANUAL, THE FOLLOWING GENERIC TERMS ARE USED:

- **Occupant safety:** includes the following concurring factors which help keep the loads and consequences of an accident as low as possible for vehicle occupants.
  - the protective effect of the vehicle structure
  - the components of the restraint system and their correct handling
  - correct and risk-minimising behaviour of vehicle occupants

  For the safety of all vehicle occupants, always follow the instructions and warning notices in this Owner's Manual. If necessary, share this with your passengers.
- **Restraint system:** includes those components which help avoid potential contact between vehicle occupants and parts of the vehicle interior.

The seat belts and airbags, for example, are components of the restraint system.

- **Child restraint system:** you can find all information on this subject in the chapter "Children in the vehicle" (⟶ page 163).

BE DILIGENT
For the components of the restraint system to provide the intended level of protection, it is essential that your posture is correct and that the seat belt is correctly fastened.

Please bear in mind that carelessness regarding the seating position and putting on the seat belt may have serious consequences. Be diligent and make sure that all vehicle occupants are sitting correctly and have fastened their seat belts properly before starting every journey (⟶ page 140).

Information on the correct seat position

The seat position must be correct in order for the components of the restraint system to provide the intended level of protection.

The seat position influences both the protection provided by the seat belt and the additional protection provided by the airbag.

A correct seat position in which the seat is nearly perfectly upright and a correctly fastened seat belt reduce the risks posed by the airbag when it is deployed.

Keep in mind space considerations when choosing a seat. With the seat in the correct, nearly upright position, your head should not touch the roof.

⚠ WARNING
Risk of injury- or death due to an incorrect seat position

If you deviate from the correct seat position, the airbag cannot provide its intended protective function.

Each vehicle occupant must make sure of the following.

- ► Put the seat in the correct position.
- ► Fasten seat belts correctly.
- ► Observe the following information.

IN ORDER FOR THE RESTRAINT SYSTEM TO PROVIDE THE INTENDED LEVEL OF PROTECTION, OBSERVE THE FOLLOWING INFORMATION:

- Before starting your journey, adjust your seat correctly (⟶ page 234).
  When doing so, make sure you are able to fasten your seat belt correctly. The shoulder belt strap must be routed forward from the seat belt outlet over the centre of your shoulder.
- Keep your distance from the airbags, especially the front airbags. Set the driver's seat and front passenger seat as far back as possible while making sure the seat belt is fastened correctly.
- If persons are sitting on the rear seats, vehicle occupants should maintain an sufficient distance to the parts of the vehicle interior in front of them.
- Make sure there are no people, animals or objects between the vehicle occupants and an airbag.
- If you are the driver, observe the following information on the correct position of the driver's seat (⟶ page 234).
  Only hold the steering wheel by the steering wheel rim. This allows the driver's airbag to fully deploy.

During pregnancy in particular, it is important to ensure the greatest possible distance from the steering wheel due to the change in stature and the unborn child.

- Assume a nearly upright sitting posture, with your buttocks positioned as far back as possible in the gap between the seat cushion and the seat backrest.

  Your back must lie as flatly and as firmly as possible against the seat backrest.
- While driving, do not lean forward and do not lean against the door or side window. You may otherwise be in the deployment area of the airbags.
- Sit with their feet resting on the floor, if possible. Your thighs are supported slightly by the seat cushion.

  Do not put your feet on the cockpit, for example. Your feet may otherwise be in the deployment area of the airbag.
- Fasten seat belts correctly (⟶ page 141).

Notes on wearing the seat belt correctly

Always fasten your seat belt correctly before starting a journey. A seat belt can only provide the best level of protection if it is worn correctly.

WARNING
Risk of injury or death due to incorrectly fastened seat belt

If the seat belt is not worn correctly, it cannot perform its intended protective function.

In addition, an incorrectly fastened seat belt can also cause injuries, for example, in the event of an accident or when braking or changing direction suddenly.

► Always ensure that all vehicle occupants have their seat belts fastened correctly and are sitting properly.

WARNING
Risk of injury or death when additional restraint systems are not used for persons with a smaller stature

Persons under 1.50 m tall cannot wear the seat belt correctly without a suitable additional restraint system.

► Always secure persons under 1.50 m tall in a suitable restraint system.

Observe the following information on the correct seat position and posture (⟶ page 140).

EACH VEHICLE OCCUPANT MUST OBSERVE THE FOLLOWING NOTES IN PARTICULAR:

- The seat belt must not be twisted.
- The shoulder belt strap must be routed forward from the seat belt outlet over the centre of your shoulder.

- The shoulder belt strap should neither touch your neck nor be routed under your arm or behind your back.
- The lap belt must be routed as low down across the hips as possible.

  In addition, push the lap belt down as far as possible across your hips and pull tight with the shoulder belt strap. Never route the lap belt across your abdomen.
- After being tightened, the shoulder belt strap and lap belt must fit snugly against the body.
- Particularly during pregnancy, the instructions for wearing the seat belt correctly must be followed consistently due to the change in stature and the unborn child (⟶ page 142).
- Avoid wearing bulky clothing, e.g. a winter coat.
- Never route the seat belt across sharp, pointed, abrasive or fragile objects.
- Only one person should use each seat belt at any one time.
- Never secure objects with a seat belt if the seat belt is also being used by one of the vehicle's occupants.

  Also ensure that no objects, e.g. a cushion, are ever placed between a person and the seat.

If you are driving with a child in the vehicle, observe the information in the chapter "Children in the vehicle" (⟶ page 163).

Observe the instructions for loading the vehicle when securing objects, luggage or loads (⟶ page 256).

Wearing a seat belt during pregnancy

BE DILIGENT

PAY PARTICULAR ATTENTION TO THE FOLLOWING INSTRUCTIONS DURING PREGNANCY DUE TO THE CHANGE IN STATURE AND THE UNBORN CHILD:

- Correct sitting position and posture
- Wearing the seat belt correctly

The correct sitting position with a nearly upright sitting posture and a correctly fastened seat belt reduce the risks for the mother and unborn child in the event of an accident.

Particularly during pregnancy, due to the change in stature and the unborn child, maintain as much distance as possible between your abdomen (baby bump) and the steering wheel.

If it is not possible to maintain a sufficient distance to the steering wheel whilst simultaneously ensuring safe operation of the vehicle, another person should drive the vehicle.

ⓘ Mercedes-Benz recommends that you seek professional advice, e.g. from a doctor, about the possible risks involved in driving in a vehicle when pregnant.

WEARING THE SEAT BELT

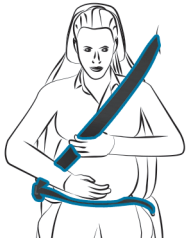

PARTICULARLY DURING PREGNANCY, OBSERVE THE FOLLOWING NOTES:

- Push the lap belt down as far as possible across your hips and pull tight with the shoulder belt strap. Never route the lap belt across your abdomen (baby bump).
- The shoulder strap should run along the side of the abdomen (baby bump).
- Never position any objects between the person and the seat belt, not even cushions for example.

Fastening and adjusting seat belts

If the seat belt is pulled quickly or sharply, the seat belt retractor locks. The seat belt strap cannot be pulled out any further.

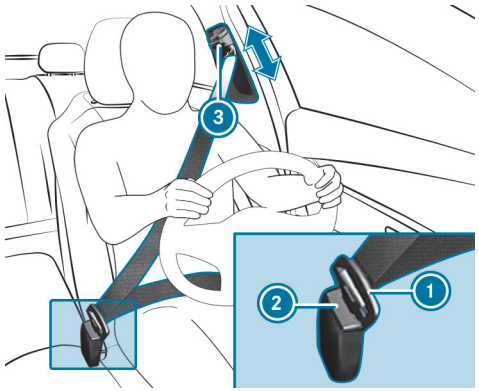

- ► Always engage seat belt tongue (1) of the seat belt into seat belt buckle (2) of the corresponding seat.
- ► **To adjust the seat belt height:** press button (3) on the seat belt outlet and slide the seat belt outlet to the desired position.
- ► **To engage the seat belt outlet:** release button (3) and ensure that the seat belt outlet engages.

NOTE
Deployment of components of the restraint system when the front passenger seat is unoccupied and a seat belt is buckled

When the front passenger seat is unoccupied and the seat belt tongue of the seat belt is engaged in the seat belt buckle, components of the restraint system may deploy unnecessarily on the front passenger side, e.g. the seat belt tensioner.

- ► Only buckle the seat belts as intended.

Function of the restraint system warning lamp

When the vehicle is switched on, a self-test is performed, during which the restraint system warning lamp lights up. It goes out no later than a few seconds after the vehicle is started. The components of the restraint system are then functional.

A MALFUNCTION HAS OCCURRED IN THE RESTRAINT SYSTEM IF:

- the restraint system warning lamp does not light up or is lit continuously when the vehicle is switched on
- the restraint system warning lamp lights up continuously or repeatedly during a journey

If components of the restraint system have been deployed, the restraint system warning lamp lights up continuously.

WARNING
Risk of injury due to malfunctions in the restraint system

Components in the restraint system may be activated unintentionally or not deploy as intended in an accident.

► Have the restraint system checked and repaired immediately at a qualified specialist workshop.

Plug-in hybrid: if the restraint system is malfunctioning, the automatic high-voltage emergency shut-off may not function.

DANGER
Risk of fatal injury due to malfunctioning automatic high-voltage emergency shutoff

In the event of an accident, the high-voltage on-board electrical system may not be deactivated as intended.

You may receive an electric shock if you touch the damaged components of the high-voltage on-board electrical system.

► Have the automatic high-voltage emergency shutoff checked and repaired immediately at a qualified specialist workshop.

► After an accident, switch off the vehicle immediately.

Mercedes-Benz recommends that you have the vehicle towed to a qualified specialist workshop.

Function of the seat belt warning lamp

The seat belt warning lamp on the driver display is a reminder that the driver and/or front passenger are not wearing their seat belts.

All vehicle occupants must fasten their seat belts correctly (→ page 141).

In addition, a warning tone may sound.

When the driver and the front passenger fasten their seat belts, the seat belt warning goes out.

Function of the rear seat belt status display

The rear seat belt status display is only available for certain countries.

INDICATORS ON THE DRIVER DISPLAY



Depending on the vehicle equipment, the rear seat belt status display can be with or without seat occupancy recognition. The colour of the symbol is intended to help you quickly identify the status of the rear seat belt.

VEHICLES WITH SEAT OCCUPANCY RECOGNITION IN THE REAR PASSENGER COMPARTMENT (SEAT BELT REMINDER)
If the vehicle is ready to drive and a rear seat is occupied by an adult who is not wearing a seat belt, the rear seat belt status display is displayed.

The seat occupancy recognition in the rear can recognise adults or persons of corresponding stature. Lighter persons, especially children, are not reliably recognised by the seat occupancy recognition. The seat occupancy recognition also does not react or only reacts to a limited extent when child restraint systems are used.

POSSIBLE COLOUR OF THE SYMBOL:

- Grey: the rear seat is unoccupied or a child restraint system is attached to the rear seat.
- Green: the adult in the rear seat is wearing a seat belt.
- Red: the adult in the rear seat is not wearing a seat belt.

The seat belt reminder goes out as soon as the seat belt of the adult in the rear seat is fastened.

If an adult unfastens a seat belt in the rear passenger compartment while the vehicle is motion, the rear seat belt status display appears again.

In addition, a warning tone may sound.

VEHICLES WITHOUT SEAT OCCUPANCY RECOGNITION IN THE REAR PASSENGER COMPARTMENT
The rear seat belt status display in the driver display is a reminder that all vehicle occupants must wear their seat belts correctly.

Every time the vehicle is switched on, the rear seat belt status display informs you for a certain amount of time which rear seat belt is not fastened.

POSSIBLE COLOUR OF THE SYMBOL:

- Grey: the rear seat belt is not fastened.
- Green: the seat belt tongue of a rear seat belt is engaged in the seat belt buckle of the displayed seat.
- Red: the person in the rear seat has unfastened their seatbelt.

If a person unfastens a seat belt in the rear passenger compartment while the vehicle is motion, the rear seat belt status display appears again.

In addition, a warning tone may sound.

Function of the PASSENGER AIR BAG indicator lamps (front passenger airbag shutoff)



Vehicles without automatic front passenger airbag shutoff have a special sticker affixed to the side of the cockpit on the front passenger side (⟶ page 168). Indicator lamps PASSENGER AIR BAG ON and OFF have no function in this case and are not an indication of automatic front passenger airbag deactivation.

On vehicles with automatic front passenger airbag deactivation, the PASSENGER AIR BAG indicator lamps display the status of the front passenger airbag.

If the front passenger seat is occupied or a child restraint system is installed on it, make sure both before and during the journey that the status of the front passenger airbag is correct for the situation.

WARNING
Risk of potentially fatal injuries due to objects trapped under the front passenger seat

Objects trapped under the front passenger seat may interfere with the function of the automatic front passenger airbag shutoff or damage the system.

- ► Do not stow any objects under the front passenger seat.
- ► When the front passenger seat is occupied, ensure that no objects have become trapped beneath the front passenger seat.

Self-test: when the vehicle is switched on, both the PASSENGER AIR BAG ON and OFF indicator lamps light up simultaneously for several seconds.

AFTER THE SELF-TEST, YOU CAN DETERMINE THE STATUS OF THE FRONT PASSENGER AIRBAG AS FOLLOWS:

- **Front passenger airbag disabled:** PASSENGER AIR BAG OFF lights up continuously.

  The front passenger airbag will not be deployed in the event of an accident. If PASSENGER AIR BAG OFF is lit, no one may use the front passenger seat.

  If a rearward-facing child restraint system is fitted on the front passenger seat, PASSENGER AIR BAG OFF must be lit continuously.
- **Front passenger airbag enabled:** PASSENGER AIR BAG ON lights up for up to 60 seconds. Both indicator lamps PASSENGER AIR BAG ON and OFF are then off.

The front passenger airbag may be deployed during an accident. If the front passenger airbag is in this status, no rearward-facing child restraint system may be fitted on the front passenger seat.

ⓘ If you are driving with a child in the vehicle, observe the information in the chapter "Children in the vehicle" (⟶ page 163).

⚠ **WARNING**
Risk of injury or death due to a disabled front passenger airbag

The front passenger airbag is disabled when the PASSENGER AIR BAG OFF indicator lamp is lit.

A person in the front passenger seat could then, for example, come into contact with the vehicle interior, especially if the person is sitting too close to the cockpit.

IF THE FRONT PASSENGER SEAT IS OCCUPIED, ALWAYS ENSURE THAT:

- the classification of the person in the front passenger seat is correct and the front passenger airbag is enabled or disabled in accordance with the person in the front passenger seat.
- the front passenger seat has been moved as far back as possible.
- the person is seated correctly.

► Both before and during the journey, ensure that the status of the front passenger airbag is correct.

They observe the information on the correct seat position (⟶ page 140).

MALFUNCTION OF THE AUTOMATIC FRONT PASSENGER AIRBAG SHUTOFF
The PASSENGER AIR BAG OFF indicator lamp and the restraint system warning lamp light up simultaneously.

In this case, no one may use the front passenger seat and no child restraint system may be fitted on the front passenger seat.

Have the automatic front passenger airbag shutoff checked and repaired immediately at a qualified specialist workshop.

Disabling or enabling the front passenger airbag

The automatic front passenger airbag shutoff can disable or enable the front passenger airbag and front passenger knee airbag according to the situation.

This happens automatically as a result of the classification of the person or child restraint system on the front passenger seat.

You cannot manually disable or enable the front passenger airbag.

Information on the child restraint system

When fitting a child restraint system, observe the notes in "Children in the vehicle" (⟶ page 163).

NOTES ON THE CHILD RESTRAINT SYSTEM ON THE FRONT PASSENGER SEAT

WARNING
Risk of injury or fatal injuries if the front passenger airbag is enabled

If the front passenger airbag is enabled, a child on the front passenger seat may be struck by the front passenger airbag during an accident.

- NEVER use a rearward facing child restraint system on a seat protected by an ACTIVE AIRBAG in front of it, DEATH or SERIOUS INJURY to the CHILD can occur.

Also pay particular attention to the notes on rearward-facing or forward-facing child restraint systems on the front passenger seat (⟶ page 169).

Information on the automatic functions of the restraint system

Function of the automatic front passenger airbag deactivation

A PERSON ON THE FRONT PASSENGER SEAT MUST OBSERVE THE FOLLOWING INSTRUCTIONS:

- Sit correctly (⟶ page 140).
- Fasten seat belts correctly (⟶ page 141).

The automatic front passenger airbag deactivation can disable or enable the front passenger airbag and front passenger knee airbag according to the situation.

MAKE SURE YOU OBSERVE THE FOLLOWING INFORMATION:

- The status of the front passenger airbag, see "Function of the PASSENGER AIR BAG indicator lamps"(⟶ page 146).
- When fitting a child restraint system to the front passenger seat, observe the vehicle-specific information (⟶ page 169).



STATUS OF THE FRONT PASSENGER AIRBAG IN RELATION TO THE STATURE OF THE PERSON:

- **Front passenger airbag disabled:** PASSENGER AIR BAG OFF lights up continuously.

  The front passenger airbag will not be deployed in the event of an accident. If PASSENGER AIR BAG OFF is lit, no one may use the front passenger seat.
- **Front passenger airbag enabled:** PASSENGER AIR BAG ON lights up for up to 60 seconds or until both the PASSENGER AIR BAG ON and OFF indicator lamps go out.

  The front passenger airbag may be deployed during an accident. Observe the following information on the correct seat position (⟶ page 140).

  Vehicles with rear seats: a person of smaller stature should use a rear seat.

SYSTEM LIMITS

THE FRONT PASSENGER AIRBAG MAY BE DISABLED BY MISTAKE, E.G. IN THE FOLLOWING SITUATIONS:

- The front passenger transfers their weight by supporting themselves on a vehicle armrest.
- The front passenger sits in such a way that they unload the seat surface.

NOTE
Deployment of components of the restraint system when the front passenger seat is unoccupied

IN AN ACCIDENT, THE COMPONENTS OF THE RESTRAINT SYSTEM MAY DEPLOY UNNECESSARILY ON THE FRONT PASSENGER SIDE IF:

- There are heavy objects on the front passenger seat.
- The seat belt tongue is engaged in the seat belt buckle of the front passenger seat and the front passenger seat is unoccupied.

► Stow objects in a suitable place.

► Only one person should use each seat belt at any one time.

Depending on the detected accident situation, the window airbag on the front passenger side may deploy. The airbag is deployed regardless of whether the front passenger seat is occupied.

Function of PRE-SAFE® (anticipatory occupant protection)

PRE-SAFE® is able to detect certain critical driving situations and implement pre-emptive measures to protect the vehicle occupants.

PRE-SAFE® CAN IMPLEMENT THE FOLLOWING MEASURES INDEPENDENTLY OF EACH OTHER:

- tightening the seat belts on the driver's seat and front passenger seat.
- closing the side windows.
- **Vehicles with sliding sunroof:** closing the sliding sunroof.
- **Vehicles with memory function:** moving the front passenger seat to a more favourable seat position.
- **Vehicles with multicontour seat:** increasing the lateral support by inflating the seat side bolsters of the seat backrest.
- **PRE-SAFE® Sound:** provided that the multimedia system is switched on, generating a brief noise signal to stimulate the innate protective mechanism of a person's hearing.

NOTE
Damage caused by objects in the footwell or behind the seat

The automatic adjustment of the seat position may result in damage to the seat and/or the object.

► Stow objects in a suitable place.

Reversing the PRE-SAFE® system measures

If an accident did not occur, the pre-emptive measures that were taken are reversed.

You will need to perform certain settings yourself.

► If the seat belt pre-tensioning is not reduced, move the seat backrest slightly backwards.

The seat belt pre-tensioning releases.

Function of PRE-SAFE® PLUS (anticipatory occupant protection Plus)

PRE-SAFE® PLUS can detect certain impacts, particularly an imminent rear impact, and take pre-emptive measures to protect the vehicle occupants. These measures cannot necessarily prevent an imminent impact.

PRE-SAFE® PLUS CAN IMPLEMENT THE FOLLOWING MEASURES INDEPENDENTLY OF EACH OTHER:

- Tightening the seat belts on the driver's seat and front passenger seat.
- Activating the rear hazard warning lights at a higher flashing frequency.
- Increasing brake pressure when the vehicle is stationary. This brake application is cancelled automatically when the vehicle pulls away.

If an accident did not occur, the pre-emptive measures that were taken are reversed.

SYSTEM LIMITS

THE SYSTEM WILL NOT INITIATE ANY ACTION IN THE FOLLOWING SITUATIONS:

- when reversing

  or
- when the vehicle is towing a trailer and there is a risk of a rear impact

THE SYSTEM WILL NOT INITIATE ANY BRAKING APPLICATION IN THE FOLLOWING SITUATIONS:

- whilst driving

  or
- when entering or exiting a parking space while using Active Parking Assist

You can watch an animation on this topic via the following link:

Function of PRE-SAFE® Impulse Side

If an imminent side impact is detected, PRE-SAFE® Impulse Side can pre-emptively move the upper body of the vehicle occupant in the front seat towards the centre of the vehicle. It does this by rapidly inflating an air cushion in the outer seat side bolster of the seat backrest on the side on which the impact is anticipated. This increases the distance between the door and the vehicle occupant.

If PRE-SAFE® Impulse Side has been deployed or is faulty, the following display message appears: PRE-SAFE impulse side inoperative See Owner's Manual .

Seat belt adjustment function

Vehicles with PRE-SAFE®: After you have fastened the seat belt of the front seat, it may adjust itself against your body by pulling at the shoulder until somewhat tight. Do not hold the seat belt tightly while it is adjusting.

You can activate and deactivate the seat belt adjustment function using the multimedia system (⟶ page 152).

Activating/deactivating seat belt adjustment via the multimedia system

Multimedia system:

Settings » Vehicle » Occupant protection

- Activate or deactivate Seat belt adjustment.

Overview of the automatic measures after an accident

DEPENDING ON THE TYPE AND SEVERITY OF THE ACCIDENT, AND DEPENDING ON THE VEHICLE'S EQUIPMENT, THE FOLLOWING MEASURES CAN BE IMPLEMENTED, FOR EXAMPLE:

- automatic braking (post-collision brake) (⟶ page 152)
- activating the hazard warning lights
- triggering an automatic emergency call (⟶ page 81)
- switching off the engine

  To start the vehicle again, switch the vehicle off and back on (⟶ page 326). Depending on the type and severity of the accident, the vehicle might no longer start.
- Shutting off the fuel supply system
- **Plug-in hybrid:** shutting off the hybrid system and high-voltage on-board electrical system
- unlocking the vehicle doors
- lowering the side windows
- displaying the emergency guide on the central display (⟶ page 675)
- switching on the interior lighting

Function of the post-collision brake after an accident

Depending on the accident situation, the post-collision brake can minimise the severity of a further collision or even avoid it.

If an accident is detected, the post-collision brake can implement automatic braking. When the vehicle has come to a standstill, the electric parking brake is automatically applied.

AUTOMATIC BRAKING CAN BE INTERRUPTED USING ONE OF THE FOLLOWING ACTIONS:

- braking more strongly than automatic braking.
- fully depressing the accelerator pedal with force.

Purpose and function of the restraint system

Overview of deployment situations (restraint system)

IN PARTICULAR ENSURE THE FOLLOWING CONDITIONS TO ENABLE THE COMPONENTS OF THE RESTRAINT SYSTEM TO UNFOLD THEIR PROTECTIVE POTENTIAL:

- Sit correctly (⟶ page 140).
- Fasten seat belts correctly (⟶ page 141).
  - Function of the seat belt warning lamp (⟶ page 144).
  - Function of the rear seat belt status display (⟶ page 144).
- The restraint system warning lamp does not light up after the self-check (⟶ page 144).
- The PASSENGER AIR BAG indicator lamps display the correct status of the front passenger airbag (⟶ page 146).

DEPENDING ON THE DETECTED DEPLOYMENT SITUATION, THE COMPONENTS OF THE RESTRAINT SYSTEM CAN BE ACTIVATED OR DEPLOYED INDEPENDENTLY OF EACH OTHER:

- Seat belt tensioner: frontal impact, rear impact, side impact, rollover
- Driver's airbag, front passenger airbag: frontal impact
- Knee airbag: frontal impact
- Side airbag: side impact
- Centre airbag in the driver's seat backrest: side impact
- Window airbag: side impact, rollover, frontal impact
- PRE-SAFE® Impulse Side: side impact

The installation location of an airbag is identified by the AIRBAG (⟶ page 161) symbol.

Observe the information on how the restraint system works (⟶ page 153).

Information on how the restraint system works

The function of the restraint system depends on the severity of the impact detected and the apparent type of accident.

For more information about types of accidents, see "Overview of deployment situations" (⟶ page 153).

The activation thresholds for the components of the restraint system are determined based on the evaluation of the sensor values measured at various points in the vehicle. This process is pre-emptive in nature. The triggering of the components of the restraint system must take place in good time at the start of the impact.

Factors which can only be seen and measured after a collision has occurred cannot play a decisive role in airbag deployment. They also do not provide an indication of airbag deployment.

The vehicle may be deformed significantly without an airbag being deployed. This is the case if only parts which are relatively easily deformed are affected and the rate of vehicle deceleration is not high. Conversely, an airbag may be deployed even though the vehicle suffers only minor deformation. If, e.g. very rigid vehicle parts such as longitudinal members are hit, this may result in the vehicle deceleration detected by the sensors being sufficiently high.

Depending on the apparent type of accident and the detected deployment situation, seat belt tensioners and/or airbags supplement the protection offered by a correctly worn seat belt.

When enabled, an airbag can provide additional protection for the respective vehicle occupant.

POTENTIAL PROTECTION PROVIDED BY EACH AIRBAG:

- Knee airbag: thighs, knees and lower legs
- Driver's airbag, front passenger airbag: head and ribcage
- Window airbag: head
- Side airbag: ribcage, also pelvis for front seat occupants
- Centre airbag: head and ribcage

However, no system available today can completely eliminate injuries and fatalities in every accident situation. In particular, the seat belt and airbag generally do not protect against objects penetrating the vehicle from the outside. It is also not possible to completely rule out the risk of injury caused by the airbag deploying.

Mercedes-Benz recommends that you have the vehicle towed to a qualified specialist workshop after an accident. Take this into account, particularly if a seat belt tensioner has been triggered or an airbag deployed.

IF THE SEAT BELT TENSIONERS ARE TRIGGERED OR AN AIRBAG IS DEPLOYED, YOU WILL HEAR A BANG, AND A SMALL AMOUNT OF FINE POWDER MAY ALSO BE RELEASED:

- The bang will not generally affect your hearing.
- In general, the fine powder released is not hazardous to health but may cause short-term breathing difficulties to persons suffering from asthma or other respiratory problems.

  Provided it is safe to do so, leave the vehicle immediately or open the window in order to prevent breathing difficulties.

Information on the limited protection provided by the restraint system

RISK DUE TO THE INCORRECT BEHAVIOUR OF VEHICLE OCCUPANTS

EVERY VEHICLE OCCUPANT MUST MAKE SURE OF THE FOLLOWING IN PARTICULAR:

- They observe the information on the correct seat position (→ page 140).
- Do not stow any heavy, pointed, sharp or fragile objects in the pockets of clothing items. Stow such objects in a suitable place.

WARNING
Risk of injury or death due to incorrect seat position

The seat belt will not offer the intended level of protection if you have not moved the seat backrest to an almost vertical position.

In particular, you may slip under the seatbelt and injure yourself.

- ► Adjust the seat properly before beginning your journey.
- ► Always ensure that the seat backrest is in an almost vertical position and that the shoulder section of your seat belt is routed across the centre of your shoulder.

RISK DUE TO OBJECTS IN THE VEHICLE INTERIOR

EVERY VEHICLE OCCUPANT MUST MAKE SURE OF THE FOLLOWING IN PARTICULAR:

- They observe the information on the correct seat position (⟶ page 140).
- There are no objects between the seat, door and door pillar (B-pillar).
- There are no hard objects, e.g. clothes hangers, hanging on the grab handles or coat hooks.
- Do not stow any heavy, pointed, sharp or fragile objects in the pockets of clothing items. Stow such objects in a suitable place.

To secure objects, luggage or cargo, observe the instructions for loading the vehicle (⟶ page 256).

WARNING
Risk of injury or death due to blocked seat belt buckle or seat belt anchorage

Objects next to the front seat that block the seat belt buckle or the moving seat belt anchorage on the front seat impair the function of the seat belt tensioners.

- ► Before starting the journey, make sure that there are no objects around the seat belt buckle or between the front seat and door.

WARNING
Risk of injury from objects in the deployment area of an airbag

Objects in the deployment area of an airbag can hinder or prevent the correct deployment of the airbag.

The airbag may then deploy in an uncontrolled manner and may even cause additional injuries to the vehicle occupants by deploying. This may be the case in particular if the airbag is integrated into the seat.

- ► Always stow and secure objects correctly.
- ► Before commencing your journey, make sure that no objects are stowed in the deployment area of an airbag.

The installation location of an airbag is identified by the symbol AIRBAG (⟶ page 161).

OBSERVE THE FOLLOWING INFORMATION:

- Notes on loading the vehicle (⟶ page 256)

- Information on the centre airbag in the driver's seat backrest (⟶ page 161)

RISK DUE TO FITTING ACCESSORIES

Do not attach accessories such as mobile navigation devices, mobile phones or cup holders, within the deployment area of an airbag, e.g. on the cockpit, on the door, on the side window or on the side trim.

In addition, no connecting cables, tensioning straps or retaining straps must be routed or attached to the vehicle within the deployment area of an airbag. Always comply with the accessory manufacturer's installation instructions and, in particular, the notes on suitable places for installation.

⚠ **WARNING**
Risk of injury or death due to unsuitable protective covers

Due to unsuitable protective covers, the airbags cannot protect vehicle occupants as they are designed to do.

► You should only use protective covers that have been approved for the corresponding seat by Mercedes-Benz.

In addition, the function of the automatic front passenger airbag deactivation could be restricted due to an unsuitable protective cover. If the front passenger seat is occupied, ensure that the PASSENGER AIR BAG indicator lamps display the correct status of the front passenger airbag (⟶ page 146).

RISK DUE TO PETS IN THE VEHICLE INTERIOR

⚠ **WARNING**
Risk of accident and injury due to animals left unsecured or unattended in the vehicle

If you leave animals in the vehicle unattended or unsecured, they could press buttons or switches, for instance.

AN ANIMAL MAY:

- activate vehicle equipment and become trapped, for example
- switch systems on or off and endanger other road users

Unsecured animals may be thrown about the vehicle in the event of an accident, or sudden steering and braking manoeuvres, and injure vehicle occupants.

► Never leave animals unattended in the vehicle.

► Always correctly secure animals while driving, e.g. using a suitable animal carrier.

RISK DUE TO MODIFICATION, DAMAGE OR WEAR TO THE COMPONENTS OF THE RESTRAINT SYSTEM

⚠ **WARNING**
Risk of injury or death due to modifications to the restraint system

Vehicle occupants may no longer be protected as intended if alterations are made to the restraint system.

- ► Never alter the parts of the restraint system.
- ► Never tamper with the wiring or any electronic component parts or their software.

If it is necessary to modify the vehicle to accommodate a person with disabilities, contact a qualified specialist workshop.

Mercedes-Benz recommends that you use driving aids which have been approved for your vehicle by Mercedes-Benz.

⚠ **WARNING**
Risk of injury or death due to damaged or modified seat belts

SEAT BELTS CANNOT PROVIDE PROTECTION IN THE FOLLOWING SITUATIONS:

- the seat belt is damaged, has been modified, is extremely dirty, bleached or dyed
- the seat belt buckle is damaged or extremely dirty
- modifications have been made to the seat belt tensioner, seat belt anchorage or seat belt retractor

Seat belts may sustain non-visible damage in an accident, e.g. due to glass splinters.

Modified or damaged seat belts could tear or fail in the event of an accident, for example.

Modified seat belt tensioners could accidentally trigger or fail to function as intended.

- ► Never modify the seat belt system, for example the seat belt, seat belt buckle, seat belt tensioner, seat belt anchorage and seat belt retractor.
- ► Make sure that the seat belts are undamaged, not worn and clean.
- ► Always have the seat belts checked immediately after an accident at a qualified specialist workshop.

Mercedes-Benz recommends that you use seat belts which have been approved for your vehicle by Mercedes-Benz.

The seat is designed for the standard three-point seat belt. If you fit a different multipoint seat belt, for example a four-point seat belt, the restraint system cannot provide the intended level of protection.

Depending on the type of vehicle, there may be openings in the seat backrest. These openings have no function.

WARNING
Risk of injury or fatal injury due to modified seat belt systems

If you feed seat belts through the opening in the seat backrest, the seat backrest may be damaged or may even break in the event of an accident.

- Only use the standard three-point seat belt.
- Never modify the seat belt system.

WARNING
Risk of injury due to modifications to the cover of an airbag

If you modify the cover of an airbag or affix objects such as stickers to it, the airbag can no longer function as intended.

- Never modify the cover of an airbag.
- Do not attach any objects to the cover.

The installation location of an airbag is identified by the AIRBAG symbol (⟶ page 161).

WARNING
Risk of injury due to malfunctioning sensors in the door

The function of the airbags can be impaired due to modifications or incorrect work performed on the doors or door trim, or if the doors are damaged.

- Never modify the doors or parts of the doors.
- Always have work on the doors or door trim carried out at a qualified specialist workshop.

RISK DUE TO COMPONENTS OF THE RESTRAINT SYSTEM WHICH HAVE ALREADY BEEN DEPLOYED

Mercedes-Benz recommends that you have the vehicle towed to a qualified specialist workshop after an accident.

WARNING
Risk of burns from hot airbag components

The airbag parts are hot after an airbag has been deployed.

- Do not touch the airbag parts.
- Have a deployed airbag replaced at a qualified specialist workshop as soon as possible.

WARNING
Risk of injury due to deployed airbag

A deployed airbag no longer offers any protection.

- Have the vehicle towed to a qualified specialist workshop in order to have the deployed airbag replaced.

Have deployed airbags replaced immediately.

WARNING
Risk of injury or death from deployed pyrotechnic seat belt tensioners

Pyrotechnic seat belt tensioners that have been deployed are no longer operational and are unable to perform their intended protective function.

- Therefore, have deployed pyrotechnic seat belt tensioners immediately replaced at a qualified specialist workshop.

Seat belts

Releasing the seat belts

- Press the release button in the seat belt buckle and guide the seat belt back with the seat belt tongue.

NOTE
Damage caused by trapping the seat belt

If an unused seat belt is not fully retracted, it may become trapped in the door or in the seat mechanism.

- Always ensure that an unused seat belt is fully retracted.

Airbags

Overview of airbags

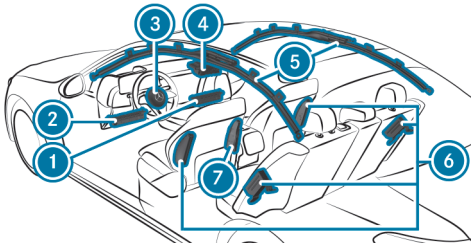

1. Front passenger knee airbag
2. Driver's knee airbag
3. Driver's airbag
4. Front passenger airbag
5. Window airbag
6. Side airbag
7. Centre airbag

The installation location of an airbag is identified by the symbol AIRBAG. An additional arrow symbol ▶ indicates the installation location for certain airbags.

Observe the information in "Overview of deployment situations" (⟶ page 153).

Information on the centre airbag in the driver's seat backrest

When triggered, the centre airbag deploys between the front seats. Do not stow any objects in the deployment area of the centre airbag.

Observe the notes on loading the vehicle (⟶ page 256).

Back to Contents

Children in the vehicle

This interactive PDF works like a website – tap or click a button to jump straight to where you want to go.
You can return here at any time via the navigation bar at the top left.

Key points in brief
Important safety notes
Suitable child restraint systems for the transport of children
Compatible seats for attaching child restraint systems
Securing the child restraint system
Child safety locks
Passive occupant presence reminder

Key points in brief

Safely transporting children in the vehicle

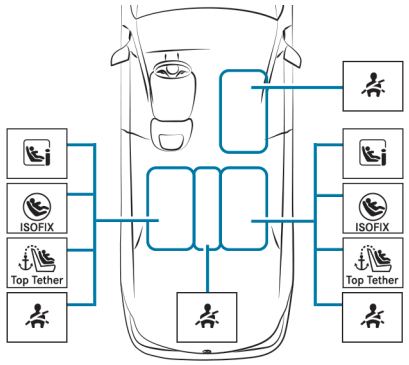

ALWAYS OBSERVE THE FOLLOWING WHEN TRANSPORTING CHILDREN:

- Never leave children unattended in the vehicle (⟶ page 166).
- Secure children younger than twelve or of a height up to 1.50 m on the seat (see illustration above) properly with a suitable and approved child restraint system (⟶ page 172) and secure small children in a rearward-facing child restraint system.
- Observe the child restraint system manufacturer's installation instructions.

LEFT/RIGHT REAR SEAT (PREFERRED SEATS)
PREFERRED FASTENING SYSTEM:

ISOFIX mounting brackets (⟶ page 177)

or i-Size mounting brackets (⟶ page 178)

and additionally fasten Top Tether if available (⟶ page 184).

ALTERNATIVE ATTACHMENT SYSTEM:

Vehicle seat belt (⟶ page 185)

Additionally fasten Top Tether if recommended by the manufacturer of the child restraint system (⟶ page 184).

The following child restraint systems of the Universal category are approved: U, UF, i-U, IUF. Please see the other alternatives for use (⟶ page 177).

FRONT PASSENGER SEAT
FASTENING SYSTEM:

Vehicle seat belt (⟶ page 185)

BE SURE TO OBSERVE:

- If the front passenger seat is occupied, before starting the journey, ensure that the status of the front passenger airbag is correct for the current situation (⟶ page 149).

The following child restraint systems of the Universal category are approved: U(*), UF. Please see the other alternatives for use (⟶ page 178).

(*) rearward-facing child restraint systems only in conjunction with automatic airbag shutoff

REAR CENTRE SEAT

FASTENING SYSTEM:

 Vehicle seat belt (⟶ page 185)

The following belt-secured child restraint systems of the Universal category are approved: U, UF. Please see the other alternatives for use (⟶ page 178).

Important safety notes

Basic information

BE DILIGENT
Negligence when securing a child in the child restraint system may have serious consequences. Secure the child carefully before each journey.

Never allow babies and children to travel sitting on the lap of another vehicle occupant.

TO IMPROVE PROTECTION FOR CHILDREN YOUNGER THAN TWELVE YEARS OR UNDER 1.50 M IN HEIGHT, MERCEDES-BENZ URGENTLY RECOMMENDS THAT YOU OBSERVE THE FOLLOWING:

- Always secure the child in a child restraint system suitable for this Mercedes-Benz vehicle.
- The child restraint system must be appropriate to the age, weight and size of the child.
- The vehicle seat must be suitable for the child restraint system to be fitted:
  - ISOFIX mounting bracket: (⟶ page 177)
  - i-Size mounting bracket: (⟶ page 178)
  - Securing with the vehicle seat belt: (⟶ page 178)

Accident statistics show that children secured on the rear seats are generally safer than children secured on the front seats. For this reason, Mercedes-Benz strongly advises that the child restraint system is fitted on a rear seat.

THE GENERIC TERM CHILD RESTRAINT SYSTEM

THE GENERIC TERM CHILD RESTRAINT SYSTEM IS USED IN THIS OWNER'S MANUAL. A CHILD RESTRAINT SYSTEM IS, FOR EXAMPLE:

- a baby car seat
- a rearward-facing child seat
- a forward-facing child seat
- a child booster seat – Mercedes-Benz recommends using a child booster seat **with** a seat backrest and seat belt guide.

OBSERVE LAWS AND LEGAL REQUIREMENTS
Always observe the legal requirements when using a child restraint system in the vehicle.

Make sure that the child restraint system is approved in accordance with the valid test specifications and guidelines. Further information can be obtained at a qualified specialist workshop. Mercedes-Benz recommends a Mercedes-Benz service centre for this purpose.

SECURING SYSTEMS FOR CHILD RESTRAINT SYSTEMS IN THE VEHICLE

ONLY USE THE FOLLOWING SECURING SYSTEMS FOR CHILD RESTRAINT SYSTEMS:

- the ISOFIX or i-Size mounting brackets
- the vehicle's seat belt system
- the Top Tether anchorages

Simply attaching to the ISOFIX mounting brackets or i-Size mounting brackets on the vehicle can reduce the risk of fitting the child restraint system incorrectly.

When securing a child with the integrated seat belt of the ISOFIX/LATCH or i-Size child restraint system, always comply with the permissible gross weight for the child and child restraint system (⟶ page 182).

Important warning stickers

ALWAYS SECURE A CHILD RESTRAINT SYSTEM CORRECTLY

WARNING
Risk of injury or death due to incorrect installation of the child restraint system

The child can then not be protected or restrained as intended.

- ► Be sure to comply with the manufacturer's installation instructions for the child restraint system and its correct use.
- ► Make sure that the entire base of the child restraint system always rests on the sitting surface of the seat.
- ► Never place objects (e.g. cushions) under or behind the child restraint system.
- ► Use child restraint systems only with the original cover designed for them.
- ► Always replace damaged covers with genuine covers.

- Always observe the vehicle-specific information.
  - Fitting an ISOFIX/LATCH or i-Size child restraint system on the rear seat (⟶ page 182).
  - Securing the child restraint system with the seat belt (⟶ page 185).
- Observe the warning labels in the vehicle interior and on the child restraint system.

WARNING
Risk of injury or death due to unsecured child restraint systems in the vehicle

If the child restraint system is incorrectly fitted or not secured, it can become detached.

The child cannot then be protected or restrained as intended.

The unused child restraint system can be become detached and strike vehicle occupants.

- ► Always comply with the manufacturer's installation instructions for the child restraint system and its correct use.
- ► Always fit child restraint systems correctly, even if they are transported unused in the vehicle.

DO NOT MODIFY THE CHILD RESTRAINT SYSTEM

WARNING
Risk of injury due to modifications to the child restraint system

The child restraint system can no longer function properly. This poses an increased risk of injury.

- Never modify a child restraint system.
- Only affix accessories which have been specially approved for this child restraint system by the child restraint system's manufacturer.

ONLY USE CHILD RESTRAINT SYSTEMS WHICH ARE IN PROPER WORKING CONDITION

WARNING
Risk of injury or death caused by the use of damaged child restraint systems

Child restraint systems or their retaining systems that have been subjected to stress in an accident may not be able to perform their intended protective function.

It may be the case that the child cannot be properly restrained.

- Always immediately replace child restraint systems that have been damaged or involved in an accident.
- Have the securing systems for the child restraint systems checked at a qualified specialist workshop before installing a child restraint system again.

AVOID DIRECT SUNLIGHT

WARNING
Risk of burns when the child seat is exposed to direct sunlight

If the child restraint system is exposed to direct sunlight or heat, parts could heat up.

Children could suffer burns from these parts, particularly on metallic parts of the child restraint system.

- Always make sure that the child restraint system is not exposed to direct sunlight.
- Protect the child restraint system with a blanket, for example.
- If the child restraint system has been exposed to direct sunlight, allow it to cool before securing a child into it.
- Never leave children unattended in the vehicle.

OBSERVE WHEN STOPPING OR PARKING

WARNING
Risk of fatalities due to exposure to extreme heat- or cold in the vehicle

If persons – and in particular children – are exposed to solar radiation, or the effects of heat or cold for prolonged periods of time, there is a risk of sustaining injuries or even fatalities!

- Never leave people – especially children – unattended in the vehicle.

WARNING
Risk of accident– and injury due to children left unattended in the vehicle

WHEN CHILDREN ARE LEFT UNATTENDED IN THE VEHICLE, THEY CAN BE EXPECTED IN PARTICULAR TO

- open doors, thereby endangering other persons or road users.
- get out and be struck by oncoming traffic.
- operate vehicle equipment and become trapped, for example.

IN ADDITION, THE CHILDREN COULD ALSO SET THE VEHICLE IN MOTION, FOR EXAMPLE BY:

- releasing the parking brake.
- changing the drive range.
- starting the vehicle.

► Never leave children unattended in the vehicle.

► When leaving the vehicle, always take the key with you and lock the vehicle.

► Keep the key out of reach of children.

This also applies to the Digital Vehicle Key.

NOTES FOR VEHICLES WITH THE MBUX INTERIOR ASSISTANT

ⓘ This equipment is not available with every seat variant.

ALSO NOTE THE ADDITIONAL FUNCTIONS OF THE MBUX INTERIOR ASSISTANT:

- If the child restraint system is not fastened, a corresponding message appears in the driver display (⟶ page 582).

Warning sticker in the vehicle

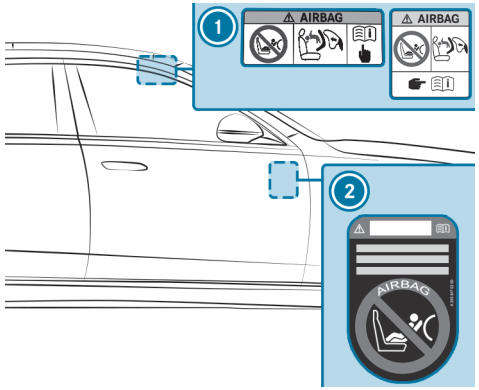

1 Front passenger airbag warning (on the front passenger sun visor) (⟶ page 169)
2 Vehicles without automatic front passenger airbag shutoff warning (visible when the front passenger door is open) (⟶ page 171)

Forward-facing and rearward-facing child restraint systems on the front passenger seat

WARNING
Risk of injury or death from using a rearward-facing child restraint system when the front passenger airbag is enabled

If you secure a child in a rearward-facing child restraint system on the co-driver seat and the PASSENGER AIR BAG OFF indicator lamp is off, the front passenger airbag can deploy in the event of an accident.

The airbag could hit the child.

- ► Always make sure the front passenger airbag is disabled. The PASSENGER AIR BAG OFF indicator lamp must be lit.
- ► NEVER use a rearward-facing child restraint system on a seat with an ENABLED FRONT AIRBAG. This can result in the DEATH or SERIOUS INJURY of the CHILD.

Observe the specific instructions for the rearward-facing and forward-facing child restraint systems (⟶ page 181).

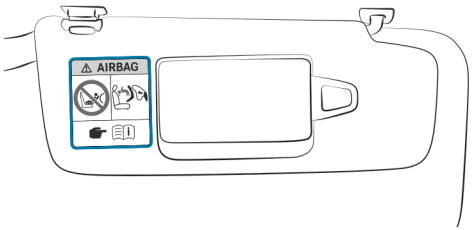

Warning notice on the front passenger sun visor

WHEN FITTING A CHILD RESTRAINT SYSTEM ON THE FRONT PASSENGER SEAT IS UNAVOIDABLE, ALWAYS OBSERVE THE FOLLOWING INFORMATION:

- The notes on automatic front passenger airbag shutoff (⟶ page 147).
- When using a rearward-facing child restraint system on the front passenger seat, the front passenger airbag must always be disabled. This is only the case if the PASSENGER AIR BAG OFF indicator lamp is lit continuously (⟶ page 146).
- The front passenger airbag is enabled when the PASSENGER AIR BAG OFF indicator lamp is not on. The front passenger airbag may be deployed during an accident. In this case, do not use rearward-facing child restraint systems.

Information on the automatic front passenger airbag deactivation

If the front passenger seat is occupied, ensure, both before and during the journey, that the status of the front passenger airbag is correct for the current situation.

WARNING
Risk of injury or death due to objects between the seat surface and the child restraint system

Objects between the seat surface and the child restraint system could affect the function of the automatic co-driver airbag shutoff.

- Do not place any objects between the seat surface and the child restraint system.
- Make sure that the entire base of the child restraint system is always resting on the seat surface of the co-driver seat.
- The backrest of the forward-facing child restraint system must, as far as possible, be resting on the seat backrest of the co-driver seat.
- It is essential to comply with the child restraint system manufacturer's installation instructions.

When fitting a child restraint system to the front passenger seat, observe the vehicle-specific information (⟶ page 169).

REARWARD-FACING CHILD RESTRAINT SYSTEM ON THE FRONT PASSENGER SEAT
If a rearward-facing child restraint system is fitted on the front passenger seat, the front passenger airbag must be deactivated. The PASSENGER AIR BAG OFF indicator lamp must light up continuously (⟶ page 146).

WARNING
Risk of injury or death from using a rearward-facing child restraint system when the front passenger airbag is enabled

If you secure a child in a rearward-facing child restraint system on the co-driver seat and the PASSENGER AIR BAG OFF indicator lamp is off, the front passenger airbag can deploy in the event of an accident.

The airbag could hit the child.

- Always make sure the front passenger airbag is disabled. The PASSENGER AIR BAG OFF indicator lamp must be lit.
- NEVER use a rearward-facing child restraint system on a seat with an ENABLED FRONT AIRBAG. This can result in the DEATH or SERIOUS INJURY of the CHILD.

If indicator lamp PASSENGER AIR BAG OFF does not light up, fit the rear-facing child restraint system on a suitable rear seat.

FORWARD-FACING CHILD RESTRAINT SYSTEM ON THE FRONT PASSENGER SEAT
If a forward-facing child restraint system is fitted on the front passenger seat, the front passenger airbag may be enabled or disabled automatically. The status of the front passenger airbag depends on the child restraint system and the stature of the child.

The PASSENGER AIR BAG OFF indicator lamp is either lit continuously, or it is not lit (⟶ page 146). Always observe the following information.

WARNING
Risk of injury or death due to incorrect positioning of the child restraint system

IF YOU SECURE A CHILD IN A FORWARD-FACING CHILD RESTRAINT SYSTEM ON THE CO-DRIVER SEAT AND YOU POSITION THE CO-DRIVER SEAT TOO CLOSE TO THE DASHBOARD, IN THE EVENT OF AN ACCIDENT, THE CHILD COULD:

- come into contact with the vehicle's interior if the PASSENGER AIR BAG OFF indicator lamp is lit, for example
- be struck by the airbag if the PASSENGER AIR BAG OFF indicator lamp is off

► Always move the co-driver seat as far back as possible. In doing so, always make sure that the shoulder belt strap is correctly routed from the seat belt outlet of the vehicle to the shoulder belt guide on the child restraint system. The shoulder belt strap must be routed forwards and downwards from the seat belt outlet. If necessary, adjust the seat belt outlet and the co-driver seat accordingly.

► Always comply with the child restraint system manufacturer's installation instructions.

Vehicles without automatic front passenger airbag shutoff

Vehicles without automatic front passenger airbag shutoff have a special sticker which is visible when the front passenger door is opened (→ page 168).

MAKE SURE YOU OBSERVE THE FOLLOWING INFORMATION:

- Never fit a rearward-facing child restraint system to the front passenger seat.
- Always fit a rearward-facing child restraint system to a suitable rear seat.
- Notes on rear-facing and front-facing child restraint systems on the front passenger seat (→ page 169)

Suitable child restraint systems for the transport of children

Advantage of a rearward-facing child restraint system

Transport a baby in a suitable rearward-facing child restraint system only. It is also preferable to transport a small child in a suitable rearward-facing child restraint system. In this case, the child sits in the opposite direction to the direction of travel and faces backwards.

Babies and small children have comparatively weak neck muscles in relation to the size and weight of their head. The risk of injury to the cervical spine during an accident can be reduced in a rearward-facing child restraint system.

Approval categories for child restraint systems

ONLY CHILD RESTRAINT SYSTEMS THAT MEET THE FOLLOWING UNECE STANDARDS ARE APPROVED FOR USE IN THE VEHICLE:

- UN-R44
- UN-R129

IDENTIFICATION OF THE CHILD RESTRAINT SYSTEM

THE FOLLOWING INFORMATION, FOREXAMPLE, IS PROVIDED ON THE APPROVAL LABEL ON THE CHILD RESTRAINT SYSTEM:

- Approval category
- Child weight group
- Authorisation number
- Child restraint system size class



Approval label under UN-R44 (example)

APPROVAL CATEGORIES UNDER UN-R44

- **Universal:** child restraint systems in the "Universal" category are approved for installation in vehicles. Following overviews of the suitability of seats for securing child restraint systems, they can be used on seats labelled U, UF or IUF.

  The identification IUF refers to ISOFIX/LATCH child restraint systems in the "Universal" category. These child restraint systems must be additionally secured with a top tether.
- **Semi-Universal:** child restraint systems in the "Semi-Universal" category may only be used if the vehicle and vehicle seat are listed in the child restraint system manufacturer's vehicle model list.

- **Vehicle-specific:** child restraint systems in the "Vehicle-specific" category may only be used if the vehicle and vehicle seat are listed in the child restraint system manufacturer's vehicle model list.

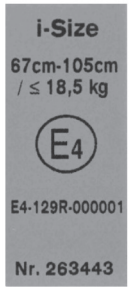

Approval label under UN-R129 (example)

APPROVAL CATEGORY UNDER UN-R129

- **i-Size** child restraint systems and booster seats with seat backrest: suitable for attachment to i-Size mounting brackets. They can be used on seats labelled i-U.

  Child restraint systems in this category can also be attached to ISOFIX bars if approved by the child restraint system manufacturer. i-Size booster seats with backrest can be used on seats marked U if the seat is approved for category B2/B3.
- Belted child restraint systems and belted booster seats without seat backrest in the **Universal** category: suitable for attachment to seats labelled U.
- **Vehicle-specific** child restraint systems (ISOFIX or belted attachment as well as child booster seats with and without seat backrest): suitable for attachment to seats marked i-U or U if approved by the child restraint system manufacturer.

PLEASE OBSERVE SUITABILITY OF THE VEHICLE SEATS

- Suitability of seats for attaching ISOFIX/LATCH child restraint systems (⟶ page 177)
- Suitability of seats for securing i-Size child restraint systems (⟶ page 178)
- Suitability of seats for securing belt-secured child restraint systems (⟶ page 178)

Recommended child restraint systems

Further information on the correct child restraint system can be obtained at a qualified specialist workshop. Mercedes-Benz recommends a Mercedes-Benz service centre for this purpose.

ATTACHMENT WITH ISOFIX

WEIGHT CATEGORY 0+ (UP TO 13 KG AND UP TO APPROXIMATELY 15 MONTHS)

Type[1]	BABY SAFE plus (including base station)
Size category	E
Approval	E1 04 301 146
Order number[2]	B6 6 86 8224
1 Manufacturer: Britax Römer	2 with colour code 9H95

WEIGHT CATEGORY I (9 TO 18 KG AND FROM APPROX. 9 MONTHS TO 4 YEARS)

Type[1]	DUO plus
Size category	B1
Approval	E1 04 301 133
Order number[2]	A 000 970 43 02
1 Manufacturer: Britax Römer	2 with colour code 9H95

ATTACHMENT WITH I-SIZE (R129 CHILD RESTRAINT SYSTEMS)

WEIGHT UP TO 13 KG, SIZE 40 TO 83 CM AND AGE FROM BIRTH TO APPROX. 15 MONTHS

Type[1]	Baby Safe 3 i-Size
Size category	R2
Approval	E1*129R03/04*0060*02
Order number	A 000 970 68 02
Order number FlexBase iSense	A 000 970 73 02
1 Manufacturer: Britax Römer	

WEIGHT UP TO 18 KG, SIZE 61 TO 105 CM AND AGE FROM APPROX. 3 MONTHS TO 4 YEARS

Type[1]	Dualfix 3 i-Size
Size category	F2X/R2
Approval	E1*129R03/04*0060*02
Type[1]	Dualfix 3 i-Size
Order number	A 000 970 93 02
Order number FlexBase iSense	A 000 970 73 02
1 Manufacturer: Britax Römer	

WEIGHT 15 TO 36 KG, SIZE 100 TO 150 CM AND AGE FROM APPROX. 3.5 TO 12 YEARS (KIDFIX M I-SIZE)

Type[1]	KIDFIX M i-Size
Size category	B2
Approval	E1*129R03/04*0061*02
Order number	A 000 970 89 02
1 Manufacturer: Britax Römer	

WEIGHT 15 TO 36 KG, SIZE 100 TO 150 CM AND AGE FROM APPROX. 3.5 TO 12 YEARS (AMG KIDFIX M I-SIZE)

Type[1]	AMG KIDFIX M i-Size
Size category	B2
Approval	E1*129R03/04*0061*02
Order number	A 000 970 91 02
1 Manufacturer: Britax Römer	

ATTACHMENT WITH THE SEAT BELT OF THE VEHICLE SEAT

WEIGHT CATEGORY 0 (UP TO 10 KG AND APPROX. 6 MONTHS) AND WEIGHT CATEGORY 0+ (UP TO 13 KG AND APPROX. 15 MONTHS)

Type[1]	BABY SAFE plus II
Approval	E1 04 301 146
Order number[2]	A 000 970 38 02
1 Manufacturer: Britax Römer	2 with colour code 9H95

R129 CHILD RESTRAINT SYSTEMS (WEIGHT UP TO 13 KG, SIZE 40 TO 83 CM AND AGE FROM BIRTH TO APPROX. 15 MONTHS)

Type[1]	Baby Safe 3 i-Size
Size category	R2
Approval	E1*129R03/04*0060*02
Order number	A 000 970 68 02
1 Manufacturer: Britax Römer	

WEIGHT CATEGORY I (9 TO 18 KG AND FROM APPROX. 9 MONTHS TO 4 YEARS)

Type[1]	DUO plus
Approval	E1 04 301 133
Order number[2]	A 000 970 43 02
1 Manufacturer: Britax Römer	2 with colour code 9H95

WEIGHT CATEGORY II/III (15 TO 36 KG AND FROM APPROX. 3 TO 12 YEARS) (KIDFIX XP)

Type[1]	KIDFIX XP
Approval	E1 04 301 304
Order number[2]	A 000 970 49 02
1 Manufacturer: Britax Römer	2 with colour code 9H95

WEIGHT CATEGORY II/III (15 TO 36 KG AND FROM APPROX. 3 TO 12 YEARS) (AMG KIDFIX XP)

Type[1]	AMG KIDFIX XP
Approval	E1 04 301 304
Order number[2]	A 000 970 33 02
1 Manufacturer: Britax Römer	2 with colour code 9H95

R129 CHILD RESTRAINT SYSTEMS (WEIGHT 15 TO 36 KG, SIZE 100 TO 150 CM AND AGE FROM APPROX. 3.5 TO 12 YEARS) (KIDFIX M I-SIZE)

Type[1]	KIDFIX M i-Size
Size category	B2
Approval	E1*129R03/04*0061*02
Order number	A 000 970 89 02
1 Manufacturer: Britax Römer	

R129 CHILD RESTRAINT SYSTEMS (WEIGHT 15 TO 36 KG, SIZE 100 TO 150 CM AND AGE FROM APPROX. 3.5 TO 12 YEARS) (AMG KIDFIX M I-SIZE)

Type[1]	AMG KIDFIX M i-Size
Size category	B2
Approval	E1*129R03/04*0061*02
Order number	A 000 970 91 02

1 Manufacturer: Britax Römer

Compatible seats for attaching child restraint systems

Suitability of seats for attaching ISO-FIX/LATCH child restraint systems

ISOFIX/LATCH IS A STANDARDISED SECURING SYSTEM FOR SPECIALLY DESIGNED CHILD RESTRAINT SYSTEMS.

The symbol indicates seats suitable for attaching an ISOFIX/LATCH child restraint system in accordance with UN R44 (⟶ page 172).

ISOFIX/LATCH child restraint systems can also be installed on seats with i-Size labelling (⟶ page 178).

Only attach ISOFIX/LATCH child restraint systems that are approved in accordance with UN R44 as per the following ISOFIX/LATCH tables.

CARRY COT

Size class – Equipment	Left/right rear seat
F – ISO/L1	X
G – ISO/L2	X

X Not suitable for an ISOFIX/LATCH child restraint system in this weight category and/or size class.

WEIGHT CATEGORY 0 (UP TO 10 KG AND UP TO APPROXIMATELY 6 MONTHS)

Size class – Equipment	Left/right rear seat
E – ISO/R1	IL

IL Suitable for ISOFIX/LATCH child restraint systems according to the table in "Overview of recommended child restraint systems", or if the vehicle and the seat are listed on the child restraint system manufacturer's vehicle model list.

WEIGHT CATEGORY 0+ (UP TO 13 KG AND UP TO APPROXIMATELY 15 MONTHS)

Size class – Equipment	Left/right rear seat
E – ISO/R1	IL
D – ISO/R2, ISO/R2X	IL
C – ISO/R3	IL (1)

IL Suitable for ISOFIX/LATCH child restraint systems according to the table in "Overview of recommended child restraint systems", or if the vehicle and the seat are listed on the child restraint system manufacturer's vehicle model list.

(1) When using a child restraint system of size class (ISO/R3), move the front seat into the highest position. Make sure that the seat backrest of the front seat does not rest against the child restraint system.

WEIGHT CATEGORY I (9 – 18 KG AND APPROXIMATELY 9 MONTHS TO 4 YEARS)

Size class – Equipment	Left/right rear seat
D – ISO/R2, ISO/R2X	IL
C – ISO/R3	IL (1)
B – ISO/F2	IUF
B1 – ISO/F2X	IUF
A – ISO/F3	IUF

IL Suitable for ISOFIX/LATCH child restraint systems according to the table in "Overview of recommended child restraint systems", or if the vehicle and the seat are listed on the child restraint system manufacturer's vehicle model list.

IUF Suitable for forward-facing ISOFIX/LATCH child restraint systems of the "Universal" category in this weight category.

(1) When using a child restraint system of size class (ISO/R3), move the front seat into the highest position. Make sure that the seat backrest of the front seat does not rest against the child restraint system.

Suitability of seats for securing i-Size child restraint systems

I-SIZE IS A STANDARDISED SECURING SYSTEM FOR SPECIALLY DESIGNED CHILD RESTRAINT SYSTEMS.

i-Size child restraint systems can be attached to a seat with the i-Size marking (⟶ page 172).

Child restraint systems that are approved in accordance with the following i-Size table may be attached.

Rear seats

LEFT AND RIGHT REAR SEAT

i-Size child restraint systems (ISO/R1, ISO/R2, ISO/F2X, ISO/B2)	i-U

i-U Suitable for forward-facing and rearward-facing i-Size child restraint systems in the "Universal" category.

REAR CENTRE SEAT

i-Size child restraint systems (ISO/R1, ISO/R2, ISO/F2X, ISO/B2)	X

i-U Suitable for forward-facing and rearward-facing i-Size child restraint systems in the "Universal" category.

FRONT PASSENGER SEAT

i-Size child restraint systems (ISO/R1, ISO/R2, ISO/F2X, ISO/B2)	X

X Not suitable for an i-Size child restraint system in the "Universal" category.

Suitability of seats for fastening belt-secured child restraint systems

Suitability of seats for fastening belt-secured child restraint systems

REAR SEATS

Weight category 0: to 10 kg	
Left/right rear seat	U, L
Rear centre seat[1]	U, L

Weight category 0+: to 13 kg	
Left/right rear seat	U, L
Rear centre seat[1]	U, L
Weight category I: 9 to 18 kg	
Left/right rear seat	U, L
Rear centre seat[1]	U, L
Weight category II: 15 to 25 kg	
Left/right rear seat	U, L
Rear centre seat[1]	U, L
Weight category III: 22 to 36 kg	
Left/right rear seat	U, L
Rear centre seat[1]	U, L
UN-R129 child restraint systems	
Left/right rear seat	U, L, B2, B3
Rear centre seat[1]	U, L, B2, B3

1 Child restraint systems with a support leg are not suitable for this seat.

U Suitable for child restraint systems of the "Universal" category in this weight category.

L Suitable for semi-universal child restraint systems according to the table in "Recommended child restraint systems", or if the vehicle and the seat are listed in the child restraint system manufacturer's vehicle model list.

B2, B3 Suitable for the installation of child restraint systems complying with ISO/B2 and ISO/B3 booster seat fixtures.

NOTES ON CHILD RESTRAINT SYSTEMS ON THE FRONT PASSENGER SEAT

- If it is absolutely necessary for you to fit a child restraint system to the front passenger seat, it is imperative that the information on child restraint systems for the front passenger seat is observed (⟶ page 169).
- Observe the specific instructions for rear-facing and front-facing child restraint systems. If the front passenger seat is occupied, ensure, both before and during the journey, that the status of the front passenger airbag is correct for the current situation (⟶ page 146).

FRONT PASSENGER SEAT

Weight category 0: to 10 kg	
Front passenger airbag enabled[1]	X
Front passenger airbag disabled[1, 2]	U, L
Weight category 0+: to 13 kg	
Front passenger airbag enabled[1]	X
Front passenger airbag disabled[1, 2]	U, L
Weight category I: 9 to 18 kg	
Front passenger airbag enabled[1]	UF, L
Front passenger airbag disabled[1, 2]	U, L
Weight category II: 15 to 25 kg	

Front passenger airbag enabled[1]	UF, L
Front passenger airbag disabled[1, 2]	U, L
Weight category III: 22 to 36 kg	
Front passenger airbag enabled[1]	UF, L
Front passenger airbag disabled[1, 2]	U, L
UN-R129 child restraint systems	
Front passenger airbag enabled[1]	UF, L, B2, B3
Front passenger airbag disabled[1, 2]	U, L, B2, B3

1 Adjust the seat cushion inclination so that the front edge of the seat cushion is in the highest position and the rear edge of the seat cushion is in the lowest position.

2 The vehicle is equipped with automatic front passenger airbag shutoff. The PASSENGER AIRBAG OFF indicator lamp must be on.

X Not suitable for children in this weight category.

U Suitable for child restraint systems of the "Universal" category in this weight category.

L Suitable for semi-universal child restraint systems according to the table in "Recommended child restraint systems", or if the vehicle and the seat are listed in the child restraint system manufacturer's vehicle model list.

UF Suitable for forward-facing child restraint systems of the "Universal" category in this weight category.

B2, B3 Suitable for the installation of child restraint systems complying with ISO/B2 and ISO/B3 booster seat fixtures.

Securing the child restraint system

Adjusting the seat correctly

WHEN FITTING A CHILD RESTRAINT SYSTEM ON THE LEFT OR RIGHT REAR SEAT, ALWAYS OBSERVE THE FOLLOWING:

- Make sure that the child's feet do not touch the front seat. If necessary, move the front seat slightly forwards.

The head restraint of the child restraint system may not be able to be fully extended when installed in the vehicle. This then leads to a restriction of the maximum size setting for certain child restraint systems. In this case observe the child restraint system manufacturer's installation instructions.

ⓘ Contact with the roof when the head restraint is fully extended and locked in place will not result in any restrictions on use.

ALSO OBSERVE THE FOLLOWING WHEN FITTING AN ISOFIX/LATCH OR I-SIZE CHILD RESTRAINT SYSTEM:

- **When using a rearward-facing child restraint system on a rear seat:** adjust the front seat so that it does not touch the child restraint system.
- **When using a forward-facing child restraint system with integrated child seat belt:** adjust the head restraint of the respective seat so that it does not push the child restraint system forwards. If necessary, the respective head restraint can be removed. In addition, the seat backrest of the child restraint system must lie as flat as possible against the backrest of the vehicle seat. After the child restraint system has been removed, replace the vehicle head restraint immediately and adjust it correctly.
- The child restraint system must not be put under strain between the roof and the seat cushion and/or be fitted facing the wrong direction. Where possible, adjust the seat cushion inclination accordingly.
- Adjust the vehicle head restraints so that the child restraint system is not put under strain by the head restraint.

WHEN FITTING A BELT-SECURED CHILD RESTRAINT SYSTEM, ALSO OBSERVE THE FOLLOWING:

- **When using a rearward-facing child restraint system on a rear seat:** adjust the front seat so that it does not touch the child restraint system.
- **When using a forward-facing child restraint system with integrated child seat belt:** adjust the head restraint of the respective seat so that it does not push the child restraint system forwards. If necessary, the respective head restraint can be removed. In addition, the seat backrest of the child restraint system must lie as flat as possible against the backrest of the vehicle seat. After the child restraint system has been removed, replace the vehicle head restraint immediately and adjust it correctly.
- The backrest of the forward-facing child restraint system must, as far as possible, be resting on the seat backrest of the rear seat.

- The child restraint system must not be put under strain between the roof and the seat cushion and/or be fitted facing the wrong direction. Where possible, adjust the seat cushion inclination accordingly.
- Adjust the vehicle head restraints so that the child restraint system is not put under strain by the head restraint.
- Make sure that the child's feet do not touch the front seat. If necessary, move the front seat slightly forwards.

DEPENDING ON THE VEHICLE EQUIPMENT, ALWAYS OBSERVE THE FOLLOWING WHEN FITTING A BELT-SECURED CHILD RESTRAINT SYSTEM ON THE FRONT PASSENGER SEAT:

- Observe the notes on rearward-facing and forward-facing child restraint systems on the front passenger seat (⟶ page 169).
- **When using a forward-facing child restraint system integrated child seat belt:** remove the head restraint from the front passenger seat, if possible. After the child restraint system has been removed, immediately replace the head restraint and adjust it correctly.
- The backrest of the forward-facing child restraint system must, as far as possible, be resting against the seat backrest of the front passenger seat.
- The child restraint system must not be put under strain between the roof and the seat cushion and/or be fitted facing the wrong direction.
- Adjust the vehicle head restraints so that the child restraint system is not put under strain by the head restraint.
- Never place objects (e.g. cushions) under or behind the child restraint system.
- Set the front passenger seat as far back as possible and move the seat into the highest position if possible. Always make sure that the shoulder belt strap is correctly routed from the seat belt outlet of the vehicle to the shoulder belt guide on the child restraint system. The shoulder belt strap must be routed forwards from the seat belt outlet and, where possible, downwards to the child restraint system.
- Fully retract the seat cushion length adjustment.
- Adjust the seat cushion inclination so that the front edge of the seat cushion is in the highest position and the rear edge of the seat cushion is in the lowest position.
- Set the seat backrest to the most vertical position possible.

Fitting an ISOFIX/LATCH or i-Size child restraint system

WARNING
Risk of accident if the rear bench seat, rear seat and seat backrest are not engaged

The rear bench seat, rear seat and seat backrest may fold forwards, even while the vehicle is in motion.

- As a result, the vehicle occupant will be pressed into the seat belt with increased force. The seat belt will not be able to protect as intended and could cause additional injury.
- Objects or loads in the boot or load compartment cannot be restrained by the seat backrest.

- Make sure that the rear bench seat, the rear seat and the seat backrest are engaged before every trip.

If the seat backrest in the rear is not engaged and locked, the red lock verification indicator will be visible.

WARNING
Risk of injury or death if the permissible gross mass of the child and child restraint system together is exceeded.

Too much load may be placed on the ISOFIX or i-Size child restraint systems and the child may not be restrained correctly in the event of an accident, for example.

- If the child is secured in an ISOFIX or i-Size child restraint system with integrated seat belts, the total mass of the child and child restraint system must not exceed 33 kg.

ALWAYS OBSERVE THE INFORMATION ON THE WEIGHT OF THE CHILD RESTRAINT SYSTEM:

- in the installation and operating instructions provided by the manufacturer of the child restraint system used
- on a label on the child restraint system, if present

Regularly check that the permissible total mass of the child and child restraint system is still being adhered to.

Requirements:

WHEN FITTING A CHILD RESTRAINT SYSTEM, ALSO OBSERVE THE FOLLOWING:

☑ Always observe the area of use and the suitability of the seats for attaching a child restraint system.

ISOFIX mounting brackets (→ page 177)

or

i-Size mounting brackets (→ page 178)

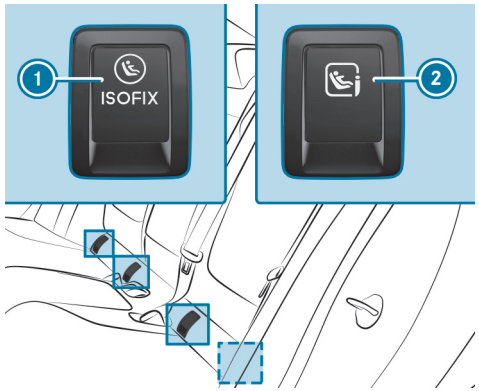

1 ISOFIX mounting brackets
2 i-Size mounting brackets

Before every journey always ensure that the ISOFIX/LATCH child restraint system or the i-Size child restraint system is engaged in both mounting brackets on the vehicle.

NOTE
Damage to the seat belt for the centre seat during installation of the child restraint system

- Make sure that the seat belt is not trapped.

- Fold back the covers 1 or 2.
- Attach the ISOFIX/LATCH or i-Size child restraint system to both mounting brackets in the vehicle.

Fastening a top tether

WARNING
Risk of injury or death if the rear seat backrests are not locked after Top Tether belts are fitted

The rear seat backrests may fold forwards when you are driving.

As a result, child restraint systems will no longer be able to perform their intended protective function. This may also cause additional injuries.

- Always lock rear seat backrests after fitting Top Tether belts.
- Observe the lock verification indicator.

If the seat backrest in the rear is not engaged and locked, the red lock verification indicator will be visible.
The child restraint system is equipped with a top tether belt. A top tether is designed to reduce the risk of injury.

A top tether is designed to reduce the risk of injury. The top tether belt enables an additional connection between the child restraint system attached with ISOFIX/LATCH or i-Size and the vehicle.

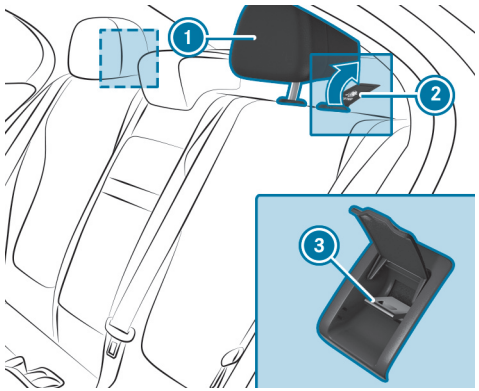

- If necessary, slide the head restraint (1) upwards (⟶ page 242).
- Fold up the cover (2) of the top tether anchorage (3).
- Fit the ISOFIX/LATCH or i-Size child restraint system with a top tether. Observe the child restraint system manufacturer's installation instructions.

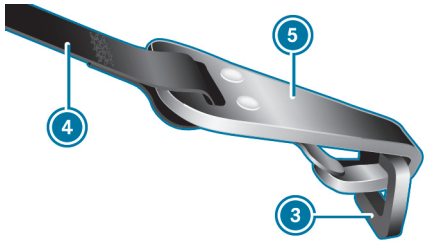

- Feed the top tether belt (4) under the head restraint (1) between the two head restraint bars.
- Hook the top tether hook (5) of the top tether belt (4) into the top tether anchorage (3) without twisting.

- Apply tension to the top tether belt (4). Observe the child restraint system manufacturer's installation instructions.
- Fold down the cover (2) of the top tether anchorage (3).
- If necessary, slide the head restraint (1) downwards (⟶ page 242). Ensure that correct routing of the top tether belt (4) is not compromised.

Fastening the child restraint system with the seat belt

WARNING
Risk of accident if the rear bench seat, rear seat and seat backrest are not engaged

The rear bench seat, rear seat and seat backrest may fold forwards, even while the vehicle is in motion.

- As a result, the vehicle occupant will be pressed into the seat belt with increased force. The seat belt will not be able to protect as intended and could cause additional injury.
- Objects or loads in the boot or load compartment cannot be restrained by the seat backrest.

- Make sure that the rear bench seat, the rear seat and the seat backrest are engaged before every trip.

If the seat backrest in the rear is not engaged and locked, the red lock verification indicator will be visible.

- For a child restraint system of the category "Universal" or "Semi-Universal" ensure that this is approved for the vehicle seat.
- Fit the child restraint system.
  The entire base of the child restraint system must always rest on the sitting surface of the seat.
- Always make sure that the shoulder belt strap is correctly routed from the seat belt outlet of the vehicle to the shoulder belt guide on the child restraint system.
  The shoulder belt strap must be routed forwards from the seat belt outlet and, where possible, downwards to the child restraint system.
- **When fitting on the rear seat:** also secure Top Tether, if present (⟶ page 184).
- **When fitting on the front passenger seat:** if necessary, adjust the seat belt outlet and the front passenger seat appropriately.

Child safety locks

Activating/deactivating the child safety lock for the rear doors

WARNING
Risk of accident– and injury due to children left unattended in the vehicle

WHEN CHILDREN ARE LEFT UNATTENDED IN THE VEHICLE, THEY CAN BE EXPECTED IN PARTICULAR TO

- open doors, thereby endangering other persons or road users.
- get out and be struck by oncoming traffic.
- operate vehicle equipment and become trapped, for example.

IN ADDITION, THE CHILDREN COULD ALSO SET THE VEHICLE IN MOTION, FOR EXAMPLE BY:

- releasing the parking brake.
- changing the drive range.
- starting the vehicle.

► Never leave children unattended in the vehicle.

► When leaving the vehicle, always take the key with you and lock the vehicle.

► Keep the key out of reach of children.

This also applies to the Digital Vehicle Key.

WARNING
Risk of fatalities due to exposure to extreme heat- or cold in the vehicle

If persons – and in particular children – are exposed to solar radiation, or the effects of heat or cold for prolonged periods of time, there is a risk of sustaining injuries or even fatalities!

► Never leave people – especially children – unattended in the vehicle.

WARNING
Risk of accident and injury due to children left unattended in the vehicle

IF CHILDREN ARE TRAVELLING IN THE VEHICLE, THEY COULD, IN PARTICULAR:

- open doors, thereby endangering other persons or road users.
- get out and be struck by oncoming traffic.
- operate vehicle equipment and become trapped, for example.

► Always activate the installed child safety locks if children are travelling in the vehicle.

► Never leave children unattended in the vehicle.

► When leaving the vehicle, always take the key with you and lock the vehicle.

Vehicles in the United Kingdom: observe the important safety notes in the "Notes on the additional door lock" section at all times.

There are child safety locks for the rear doors and the rear side windows. The child safety locks on the rear doors secure each door separately. The doors can no longer be opened from the inside.

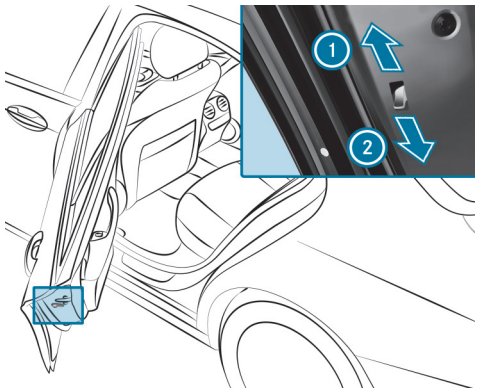

► Press the lever in the direction indicated by the arrow 1 (activate) or 2 (deactivate).

► Check the functionality of the child safety lock.

Activating/deactivating the child safety lock for the rear side windows

WARNING
Risk of accident– and injury due to children left unattended in the vehicle

WHEN CHILDREN ARE LEFT UNATTENDED IN THE VEHICLE, THEY CAN BE EXPECTED IN PARTICULAR TO

- open doors, thereby endangering other persons or road users.
- get out and be struck by oncoming traffic.
- operate vehicle equipment and become trapped, for example.

IN ADDITION, THE CHILDREN COULD ALSO SET THE VEHICLE IN MOTION, FOR EXAMPLE BY:

- releasing the parking brake.
- changing the drive range.
- starting the vehicle.

► Never leave children unattended in the vehicle.

► When leaving the vehicle, always take the key with you and lock the vehicle.

► Keep the key out of reach of children.

WARNING
Risk of fatalities due to exposure to extreme heat- or cold in the vehicle

If persons – and in particular children – are exposed to solar radiation, or the effects of heat or cold for prolonged periods of time, there is a risk of sustaining injuries or even fatalities!

► Never leave people – especially children – unattended in the vehicle.

WARNING
Risk of accident and injury due to children left unattended in the vehicle

IF CHILDREN ARE TRAVELLING IN THE VEHICLE, THEY COULD, IN PARTICULAR:

- open doors, thereby endangering other persons or road users.
- get out and be struck by oncoming traffic.
- operate vehicle equipment and become trapped, for example.

► Always activate the installed child safety locks if children are travelling in the vehicle.

► Never leave children unattended in the vehicle.

► When leaving the vehicle, always take the key with you and lock the vehicle.

Vehicles for the United Kingdom: observe the important safety notes in the "Notes on the additional door lock" section.

There are child safety locks for the rear doors and the rear side windows.

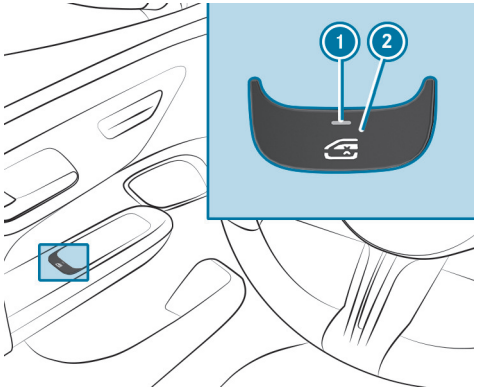

► **To activate/deactivate:** press the button (2).

THE REAR SIDE WINDOW CAN BE OPENED OR CLOSED AS FOLLOWS:

- The indicator lamp (1) is lit: via the switch on the driver's door
- The indicator lamp (1) is off: via the switch on the corresponding rear door or driver's door

Passive occupant presence reminder

Function of the passive occupant presence reminder

The passive occupant presence reminder can help to remind you about a child who may have been forgotten in the rear compartment of the vehicle. It activates automatically if it can be assumed that small children could get in or out of the vehicle if a rear door is opened for a longer period of time before or while the vehicle is switched on.

When the vehicle is switched off, the Do not leave persons or animals in the vehicle message appears on the driver display if the system was already automatically activated.

THE SYSTEM DEACTIVATES AUTOMATICALLY IN THE FOLLOWING SITUATIONS:

- When the rear door is opened after a journey.
- Two minutes after the end of the journey.
- When the vehicle is locked from the outside.

You can permanently deactivate the function in the multimedia system (⟶ page 190). When the system is deactivated, the OFF indicator lamp in the driver display lights up.

Switching the passive occupant presence reminder on or off in the multimedia system

Multimedia system:

Settings » Vehicle » Occupant protection

▶ Activate or deactivate the function.

ⓘ The function is permanently switched on or off.

Back to Contents

Opening and closing

This interactive PDF works like a website – tap or click a button to jump straight to where you want to go.
You can return here at any time via the navigation bar at the top left.

Key
Digital Vehicle Key
Doors
Boot
Side windows
Sliding sunroof
Roller sunblinds
Anti-theft protection

Key

Overview of the key's function

WARNING
Accident- and risk of injury with unsupervised children in the vehicle

IF YOU LEAVE CHILDREN UNATTENDED IN THE VEHICLE, THEY CAN IN PARTICULAR

- Open doors and thereby endanger other persons or road users.
- get out of the car and are hit by traffic.
- Operate vehicle equipment and become trapped, forexample.

IN ADDITION, THE CHILDREN COULD ALSO SET THE VEHICLE IN MOTION, FOR EXAMPLEBY:

- releasing the parking brake.
- change the gearbox setting.
- start the vehicle.

► Never leave children unattended in the vehicle.

► When leaving the vehicle, always take the SmartKey with you and lock the vehicle.

► Keep the key out of reach of children.

This also applies to the Digital Vehicle Key.

NOTE
Damage to the key caused by magnetic fields

► Keep the key away from strong magnetic fields.

A personalised user profile can be stored for each vehicle key. When the vehicle is unlocked with the key, the lighting, mirror and seat settings for the user profile are preactivated. Information on programming the key for profile selection (→ page 570).



Vehicle key
1 Indicator lamp
2 Locks
3 Unlocks (with embossed surface)
4 Opens/closes the boot lid

If the indicator lamp (1) does not light up after pressing the button or , the battery charge level is low or possibly completely discharged. Replace the battery as soon as possible.

Replace the key battery (→ page 195).

THE KEY LOCKS AND UNLOCKS THE FOLLOWING COMPONENTS:

- Doors
- Fuel filler flap
- Socket flap (plug-in hybrid)
- Boot lid

If the vehicle is not opened within approximately 40 seconds after unlocking, the vehicle is locked again. Anti-theft protection is activated again.

Do not keep the key together with electronic devices or metal objects. This could impair the key's functionality.

Activating/deactivating the acoustic locking verification signal

Multimedia system:

Settings Vehicle Open/close

- Switch the Acoustic lock on or off.

Please observe:
The selected setting for the acoustic locking verification signal must comply with the relevant national road traffic rules. In some countries, including Germany, using the acoustic locking verification signal is forbidden by traffic laws (in accordance with §16 Para. 1 and §30 Para. 1 of the German national road traffic regulations). The driver of the vehicle must comply with these regulations. In countries where the use of this function is forbidden, this function is not activated in the vehicle and must not be activated.

Changing the unlocking settings

POSSIBLE UNLOCKING FUNCTIONS OF THE KEY:

- Central unlocking
- Unlocking the driver's door and fuel filler flap
- **Plug-in hybrid:** unlocking the driver's door and fuel filler flap/socket flap

- **To switch between settings:** press the buttons and simultaneously for approximately six seconds until the indicator lamp flashes twice.

OPTIONS IF THE UNLOCKING FUNCTION FOR THE DRIVER'S DOOR AND FUEL FILLER FLAP HAS BEEN SELECTED:

- **To unlock the vehicle centrally:** press the button twice.
- **Vehicles with KEYLESS-GO:** if you touch the inner surface of the door handle on the driver's door, only the driver's door and the fuel filler flap are unlocked.

OPTIONS IF THE UNLOCKING FUNCTION FOR THE DRIVER'S DOOR AND FUEL FILLER FLAP/SOCKET FLAP HAS BEEN SELECTED (PLUG-IN HYBRID):

- **To unlock the vehicle centrally:** press the button twice.

- **Vehicles with KEYLESS-GO:** if you touch the inner surface of the door handle on the driver's door, only the driver's door and the fuel filler flap/ socket flap are unlocked.

Deactivating the key's function

Vehicles with KEYLESS-GO: if you deactivate the key's function, the KEY-LESS-GO functions will also be deactivated. Access or drive authorisation via KEYLESS-GO will then no longer be possible with that key. Activate the function of the key so that all functions are available once again with this key.

You can also deactivate the key's function to reduce the key's energy consumption if you do not use the vehicle or a key for an extended period of time.

► Press and hold the key button.

► With the button pressed, immediately press the key button twice in quick succession.
The indicator lamp of the key lights up once briefly, and then again for longer.

YOU HAVE THE FOLLOWING OPTIONS TO REACTIVATE THE KEY:

- Press any button on the key.
- Start the vehicle with the key in the marked space in the centre console (⟶ page 328).

Removing/inserting the emergency key

REMOVING THE EMERGENCY KEY

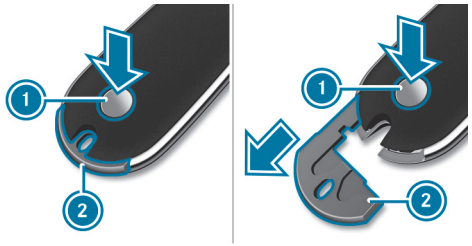

► Press the release knob 1.
The emergency key 2 is pushed out slightly.

► Fully remove the emergency key 2.

INSERTING THE EMERGENCY KEY

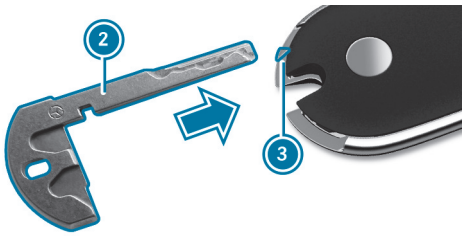

► Insert the emergency key 2 up to the marking 3 until it engages.

You can use the emergency key 2 to attach the key to a key ring.

Replacing the key battery

DANGER
Risk of fatal injuries due to swallowing batteries

Batteries contain toxic and corrosive substances. If batteries are swallowed or otherwise enter the body, severe internal burns can occur within two hours.

There is a risk of fatal injury.

- ► Keep batteries out of the reach of children.
- ► If the battery compartment cover and/or lid do not close securely, stop using the key and keep it away from children.
- ► If batteries are swallowed or otherwise enter the body, seek immediate medical attention.

WARNING
Risk of battery explosion due to high temperatures

Flammable gases can escape when batteries are exposed to high temperatures, e.g.due to prolonged exposure to sunlight. There is a risk of explosion!

- ► Do not expose batteries to high temperatures.

ENVIRONMENTAL NOTE
Environmental damage due to improper disposal of batteries

Batteries contain pollutants. It is illegal to dispose of them with the household rubbish.

- ► Dispose of batteries in an environmentally responsible manner. Take discharged batteries to a qualified specialist workshop or to a collection point for used batteries.

Requirements:

- You need a CR 2032 lithium cell battery (3 V).

Mercedes-Benz recommends that you have the battery replaced at a qualified specialist workshop.

- ► Remove the emergency key (→ page 194).

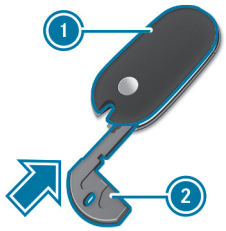

- ► Press the emergency key (2) into the opening in the key in the direction indicated by the arrow until the cover (1) opens. When doing so, do not press down on the cover (1).

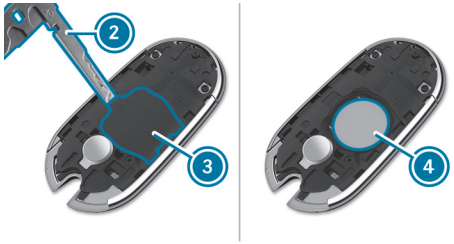

- ► Insert the emergency key (2) into the opening and unclip and remove the cover (3).
- ► Repeatedly tap the key against your palm until the battery (4) is ejected from the key.
- ► Insert the new battery with the positive terminal facing upwards. Use a lint-free cloth.
- ► Ensure that the surface of the battery is free from lint, grease and other impurities.
- ► Insert the front tabs of the cover (3) into the housing and then press down on both sides.
- ► Ensure that the cover (3) is completely closed.
- ► Insert the front tabs of the cover (1) into the housing and then press down until it is completely closed.
- ► Insert the emergency key again (⟶ page 194).

Troubleshooting problems with the key

YOU CAN NO LONGER LOCK OR UNLOCK THE VEHICLE

POSSIBLE CAUSES:

- The key battery is at low capacity or is flat.

- ► Check the battery via the indicator lamp (⟶ page 192).
- ► Replace the key battery as necessary (⟶ page 195).
- ► Use the replacement key.
- ► Use the emergency key to lock or unlock (⟶ page 209).
- ► Have the key checked at a qualified specialist workshop.

INTERFERENCE FROM A POWERFUL RADIO SIGNAL SOURCE

POSSIBLE CAUSES FOR IMPAIRMENT OF THE KEY'S FUNCTION:

- high-voltage power lines
- mobile phones
- electronic devices (notebooks, tablets)
- shielding due to metallic objects or induction loops for electrical gate systems or automatic barriers
- charging stations

- ► Ensure sufficient distance between the key and potential sources of interference.

YOU HAVE LOST A KEY

- ► Have the key deactivated at a qualified specialist workshop.
- ► If necessary, have the mechanical lock replaced as well.

Digital Vehicle Key

Function of the Digital Vehicle Key

Once you have activated a compatible, mobile end device as a Digital Vehicle Key, e.g. a smartphone, this can then be used in the same way as a conventional vehicle key.

ⓘ Information on setting up a user account and activating the "Digital Vehicle Key" service can be obtained at https://www.mercedes.me.

THE DIGITAL VEHICLE KEY CAN THEN BE USED FOR THE FOLLOWING FUNCTIONS:

- Locking/unlocking the vehicle with KEYLESS-GO (⟶ page 206)
- HANDS-FREE ACCESS function (⟶ page 215)
- Convenience closing (closing the vehicle from outside) (⟶ page 220)
- Anti-theft protection (⟶ page 230)
- Starting (⟶ page 326) or switching off (⟶ page 399) the vehicle
- Locking and unlocking the vehicle with the NFC function (emergency unlocking) (⟶ page 201)
- Starting the vehicle in emergency operation mode (⟶ page 328)

PLEASE NOTE THAT THE FOLLOWING ACCESSORIES, FOR EXAMPLE, MAY IMPAIR FUNCTIONING OF THE DIGITAL VEHICLE KEY:

- Accessories that are used to encase the smartphone, e.g.a protective cover
- a wireless power bank

SETTING UP AND MANAGING THE DIGITAL VEHICLE KEY:

- Setting up the Digital Vehicle Key (⟶ page 197)
- Managing the Digital Vehicle Key (⟶ page 199)
- Removing the Digital Vehicle Key (⟶ page 200)
- Unlocking and locking the vehicle with the Digital Vehicle Key (⟶ page 201)
- Changing the unlocking settings for the Digital Vehicle Key (⟶ page 202)
- Troubleshooting problems with the Digital Vehicle Key (⟶ page 202)

Setting up the Digital Vehicle Key

Requirements:

- A Mercedes me user account has been set up: https://www.mercedes.me
- A compatible end device with the latest operating system version.
- The Mercedes-Benz app is installed on the end device (optional).
- A Wallet app is installed on the end device.

- You have received an email from Digital Extras.
  If you have selected the "Digital Vehicle Key" equipment, you will receive an email with information on how to set up the Digital Vehicle Key.
- Bluetooth® is activated on the end device.
- The end device is sufficiently charged.

YOU HAVE THE FOLLOWING OPTIONS FOR SETTING UP AN END DEVICE AS A DIGITAL VEHICLE KEY:

- using the Mercedes-Benz app
- via email
- via MBUX multimedia system

ⓘ The power supply must be switched on to set up the end device. A key belonging to the vehicle must be detected within the vehicle.

SETUP USING THE MERCEDES-BENZ APP

► Open the Mercedes-Benz app.

► Select the "Digital Vehicle Key" menu.

► Follow the steps in the Mercedes-Benz app.

When the message "Add key and pair with vehicle" appears:

► Place the end device in the marked space (⟶ page 328).

► Follow the steps on the end device.
Your Digital Vehicle Key is now stored in your end device's Wallet app.

SETUP VIA EMAIL

► Open the email from Digital Extras.

► Follow the displayed steps as described in the email.
Your Digital Vehicle Key is now stored in your end device's Wallet app.

or

► Open the link in the email with the end device you want to use as a Digital Vehicle Key.

► Follow the steps on the end device.
When the message "Add key and pair with vehicle" appears:

► Place the end device in the marked space (⟶ page 328).

► Follow the steps on the end device.
Your Digital Vehicle Key is now stored in your end device's Wallet app.

or

► Set up the end device in the vehicle.

► Place the end device in the marked space (⟶ page 328).
"Mercedes-Benz Digital Vehicle Key" is displayed on the end device.

► Press "Enter code".
The display for entering the code appears.

► Enter the 8-digit code provided in the email.
When the message "Add key and pair with vehicle" appears:

► Follow the steps on the end device.
Your Digital Vehicle Key is now stored in your end device's Wallet app.

SETUP VIA MBUX MULTIMEDIA SYSTEM

- ► Select the menus Settings, Vehicle, Open/close in the multimedia system.
- ► Select the menu Digital Vehicle Key .
- ► Follow the steps in the multimedia system.
  Your Digital Vehicle Key is now stored in your end device's Wallet app.

ⓘ You can now use the Digital Vehicle Key in the same way as the conventional vehicle key (⟶ page 201).

ⓘ Setting up and managing the Digital Vehicle Key:
- Function (⟶ page 197)
- Management (⟶ page 199)
- Removal (⟶ page 200)
- Changing the unlocking settings for the Digital Vehicle Key (⟶ page 202)

Managing the Digital Vehicle Key

Requirements:

- A suitable end device is activated as a Digital Vehicle Key.
- Bluetooth® is activated on the end device (with the Digital Vehicle Key activated).
- The end device is sufficiently charged.

YOU HAVE THE FOLLOWING OPTIONS FOR MANAGING A DIGITAL VEHICLE KEY:

- Switch Express mode (comfort mode) off or on
  Availability of this function is dependent upon the respective end device.
- Setting up other devices of family members or friends as Digital Vehicle Keys

SWITCHING EXPRESS MODE OFF OR ON

- ► Open the Wallet app on the end device.
- ► Switch Express mode off or on.

ⓘ Express mode is switched on by default. This setting provides the best possible option for using the Digital Vehicle Key.
If the express mode is switched off and the rechargeable battery of the end device is at very low capacity, you can no longer unlock the vehicle via the NFC function.
Only switch off the express mode if you do not want to use the Digital Vehicle Key function.

SETTING UP ADDITIONAL END DEVICES AS DIGITAL VEHICLE KEYS

- ► Open the Wallet app on the end device.
- ► Select the "Share" symbol.
- ► Follow the steps on the end device.

ⓘ Mercedes-Benz recommends that the shared key be activated immediately after sharing by using it on the vehicle.

Removing the Digital Vehicle Key

Requirements:

- A suitable end device is activated as a Digital Vehicle Key.
- Bluetooth® is activated on the end device (with the Digital Vehicle Key activated).
- The end device is sufficiently charged.

YOU HAVE THE FOLLOWING OPTIONS FOR REMOVING A DIGITAL VEHICLE KEY:

- via the Wallet app
- using the Mercedes-Benz user account
- via MBUX multimedia system

ⓘ You can remove individual users or your own Digital Vehicle Key from the end device.

REMOVAL VIA THE WALLET APP

► Open the Wallet app on the end device.

The following steps are provided as an example, and may differ from those on the respective Wallet app being used.

► Select the detail view for the Digital Vehicle Key.

► Tap on the Digital Vehicle Key which is to be removed.

► Select Delete or remove key.
The selected Digital Vehicle Key is removed and can no longer be used.

REMOVAL USING THE MERCEDES-BENZ USER ACCOUNT

THE FOLLOWING OPTIONS ARE AVAILABLE:

- Remove the paired vehicle
- Decline the terms of use and consents
- Delete the user account

► Log in to your Mercedes-Benz user account.

► Select one of the above options.
The selected Digital Vehicle Key is removed and can no longer be used.

REMOVAL VIA MBUX MULTIMEDIA SYSTEM

THE FOLLOWING OPTIONS ARE AVAILABLE:

- Disconnect all Digital Vehicle Keys
- Change the Digital Vehicle Key of the main owner
- Disconnect the owner's Digital Vehicle Key
- Remove a Digital Vehicle Key

► Select the menus Settings, Vehicle, Open/close in the multimedia system.

► Select the menu Digital Vehicle Key .

► Select one of the above options.

► Follow the steps in the multimedia system.
The selected Digital Vehicle Key is removed and can no longer be used.

ⓘ Further information on the Digital Vehicle Key:
- Function (⟶ page 197)
- Setting up (⟶ page 197)

- Management(⟶ page 199)
- Changing the unlocking settings for the Digital Vehicle Key (⟶ page 202)

Unlocking and locking the vehicle with the Digital Vehicle Key

Requirements:

- The "Digital Vehicle Key" service is activated through Mercedes-Benz: https://www.mercedes-benz.de
- Bluetooth® is activated on the end device (with the Digital Vehicle Key activated).
- The end device is sufficiently charged.

If the vehicle battery is at low capacity, the vehicle can be locked and unlocked with the NFC function (emergency unlocking).

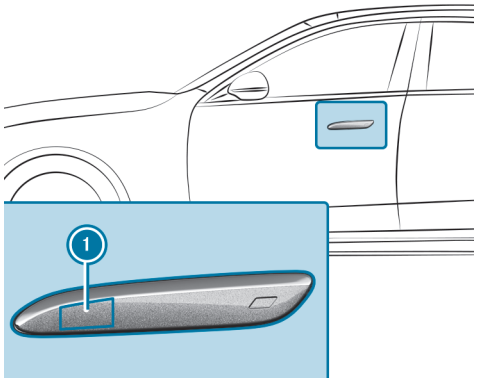

► **To lock and unlock the vehicle with the NFC function:** hold the Digital Vehicle Key steady against the door handle in close proximity to the NFC aerial (1) for up to ten seconds, from a distance of no more than 1 cm.

ⓘ If the Bluetooth® connection is faulty, or if the vehicle battery is at low capacity, the vehicle can also be started with the NFC function (⟶ page 328).
Depending on the respective end device, you can also continue to use the KEYLESS-GO function for a certain amount of time, even if the rechargeable battery in the Digital Vehicle Key is at very low capacity.

ⓘ Mercedes-Benz recommends carrying the key with you as a security measure against functional restrictions (⟶ page 194).

ⓘ Mercedes-Benz recommends placing the Digital Vehicle Key in the marked space while driving (⟶ page 328).

You can watch an animation on this topic via the following link:

Changing the unlocking settings for the Digital Vehicle Key

Multimedia system:

Settings » Vehicle » Open/close

SET SELECTIVE OR GLOBAL UNLOCKING

- Activate Unlock driver's door only.

  Selective unlocking is activated. If this function is deactivated, the owner's key unlocks the entire vehicle.

Additional information regarding locking and unlocking with the Digital Vehicle Key (⟶ page 201).

Troubleshooting problems with the Digital Vehicle Key

GENERAL RECOMMENDATIONS AND NOTES

- Ensure that the most up-to-date software version is installed on the Digital Vehicle Key at all times.

  Software updates ensure optimum, state-of-the-art functioning of the system.

- Wearing a smartwatch on your wrist will guarantee the best results.

- Please note that some end devices must be disabled in order for the Digital Vehicle Key to function properly.

YOU CAN NO LONGER LOCK AND UNLOCK THE VEHICLE WITH THE DIGITAL VEHICLE KEY.

POSSIBLE CAUSES:

- Bluetooth® is deactivated on the Digital Vehicle Key.
- The rechargeable battery for the Digital Vehicle Key is at low capacity or is flat.

- Activate Bluetooth® on the Digital Vehicle Key.
- Check the state of charge for the Digital Vehicle Key's rechargeable battery.
- If necessary, charge the rechargeable battery of the Digital Vehicle Key.
- Using the NFC function of the Digital Vehicle Key for locking or unlocking the vehicle (emergency unlocking) (⟶ page 201).
- Use the vehicle key.
- Use the emergency key to lock or unlock (⟶ page 209).
- Have the vehicle and the Digital Vehicle Key checked at a qualified specialist workshop.

INTERFERENCE FROM A POWERFUL RADIO SIGNAL SOURCE

POTENTIAL CAUSES THAT MAY LEAD TO IMPAIRMENT:

- high-voltage power lines
- mobile phones
- electronic devices (notebooks, tablets)
- shielding due to metallic objects or induction loops for electrical gate systems or automatic barriers

- charging stations

► Ensure sufficient distance between the Digital Vehicle Key and a potential source of interference.

YOU HAVE LOST A DIGITAL VEHICLE KEY

► Remove the Digital Vehicle Key from the user account (⟶ page 200).

Doors

Notes on the additional door lock

The additional door lock is only available for vehicles in the United Kingdom.

WARNING
Risk of injury to persons inside the vehicle when the additional door lock is activated

If the additional door lock is activated, the doors can no longer be opened from the inside.

- ► Never leave persons, in particular children, unattended in the vehicle.
- ► If there are persons in the vehicle, do not activate the additional door lock.

THE ADDITIONAL DOOR LOCK IS AUTOMATICALLY ACTIVATED IN THE FOLLOWING SITUATIONS:

- The vehicle is locked using the key.
- The vehicle is locked using KEYLESS-GO.
- After locking with the NFC function (**vehicles with Digital Vehicle Key:**)

If the additional door lock is activated, the doors cannot be opened from the inside.

ⓘ After locking, you can use the horn to issue a signal.

THE ADDITIONAL DOOR LOCK IS NOT ACTIVATED IN THE FOLLOWING CASES:

- The interior protection was deactivated before the vehicle was locked (⟶ page 232).
- The vehicle was locked via Mercedes-Benz Connect (⟶ page 679).

Unlocking and opening the doors from the inside

- ► **United Kingdom only:** observe the notes on the additional door lock (⟶ page 204).



- ► Pull the door handle 1.

Centrally locking and unlocking the vehicle from the inside

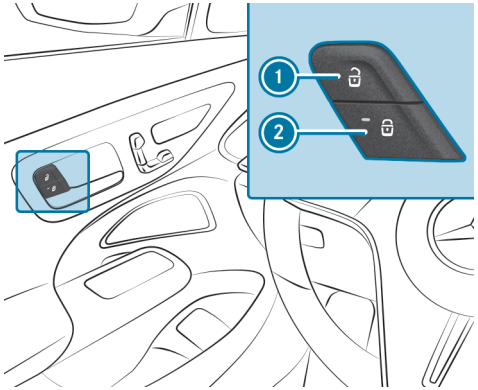

- **To unlock:** press the button (1).
- **To lock:** press the button (2).

  The red indicator lamp on the button (2) lights up when the vehicle is locked.

This does not lock or unlock the fuel filler flap.

Plug-in hybrid: the socket flap is also locked and unlocked. The socket flap can be opened even if a key is detected in the vehicle.

THE VEHICLE IS NOT UNLOCKED WHEN THE BUTTON (1) IS PRESSED:

- If you have locked the vehicle using the key
- If you have locked the vehicle using KEYLESS-GO
- After locking with the NFC function (**vehicles with Digital Vehicle Key:**)

Extending/retracting recessed door handles

THE DOOR HANDLES EXTEND AUTOMATICALLY:

- when you unlock the vehicle with the key
- when you touch one of the two outer sensor surfaces on the door handle (when the vehicle is unlocked)

THE DOOR HANDLES RETRACT AUTOMATICALLY:

- when you lock the vehicle with the key
- when pulling away
- after a short delay

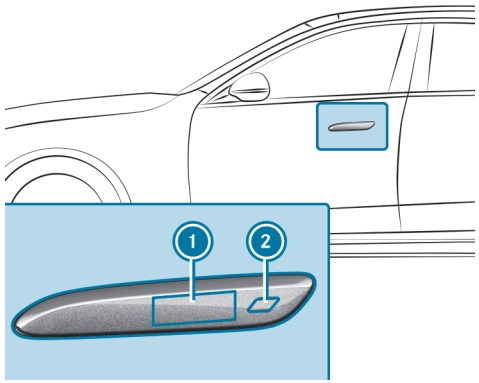

- **To extend the door handle:** Touch the outer sensor surface (1) or (2).
- **If the vehicle has been locked automatically and another person wants to get in:** To unlock the vehicle, press the button on the driver's door (⟶ page 205).

  The door handles extend.

Locking/unlocking the vehicle with KEYLESS-GO

Requirements:

- The key is outside the vehicle.
- The distance between the key and the vehicle does not exceed 1 m.
- The driver's door and the door on which the door handle is actuated are closed.

ⓘ **Vehicles with Digital Vehicle Key:** you can use the Digital Vehicle Key in the same way as the conventional vehicle key.

THE DOOR HANDLES EXTEND AUTOMATICALLY:

- when a vehicle key is detected (the vehicle is not yet unlocked at this point)
- when you unlock the vehicle with the key
- when you touch one of the two outer sensor surfaces of the door handle to unlock it

THE DOOR HANDLES RETRACT AUTOMATICALLY:

- when you lock the vehicle with the key
- when you touch one of the two outer sensor surfaces on the door handle to lock it
- after convenience closing (⟶ page 220)
- when pulling away
- after a short delay

NOTE
Damage to the vehicle caused by unintentionally opening the boot lid or a door

- when using an automatic car wash
- when using a high pressure cleaner

► Deactivate the function of the key in these situations.

or

► Make sure that the key is at a minimum distance of 3 m (high-pressure cleaner) or 6 m (automatic car wash) away from the vehicle.

Vehicles with Digital Vehicle Key:

NOTE
Vehicle damage due to unintentional opening of the boot lid or one of the doors

- when using a car wash
- when using a high-pressure cleaner

► In these situations, switch off the Digital Vehicle Key.

or

► Ensure that the Digital Vehicle Key is at least 3 m (high-pressure cleaner) or 6 m (car wash) away from the vehicle.

OBSERVE THE INFORMATION:

- on washing the vehicle in a car wash (⟶ page 44)
- on using a high-pressure cleaner (⟶ page 728)

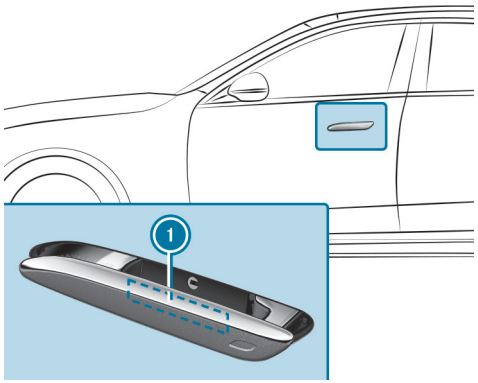

- **To unlock the vehicle:** with the door handle extended, touch the inside surface of the door handle (1).

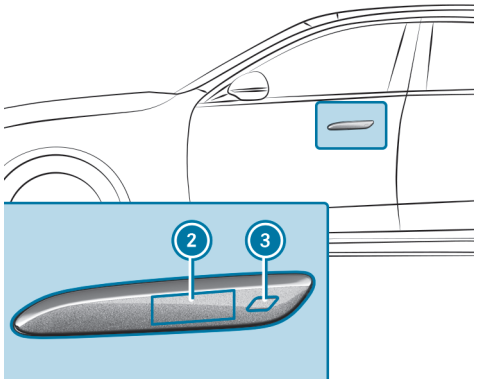

- **If the vehicle is unlocked:** touch sensor surface (2) or (3) to extend the door handle.
- **If the vehicle is locked:** touch sensor surface (2) or (3) to unlock with the door handle retracted.
- **To lock the vehicle:** touch the recessed sensor surface (3).
- **Convenience closing:** touch the recessed sensor surface (3) for a prolonged period.

ⓘ Additional information on convenience closing (⟶ page 220).

You can watch an animation on this topic via the following link:

Troubleshooting problems with KEYLESS-GO

THE VEHICLE CAN NO LONGER BE LOCKED OR UNLOCKED WITH KEYLESS-GO

POSSIBLE CAUSES:

- The key's function has been deactivated.
  This also applies to the Digital Vehicle Key.
- The key battery is at low capacity or is flat.
  Vehicles with Digital Vehicle Key: depending on the respective end device, you can continue to use the KEYLESS-GO function for a certain amount of time even when the Digital Vehicle Key's rechargeable battery charge level is extremely low.

- Activate the function of the key (⟶ page 80).

- ► Check the battery via the indicator lamp (⟶ page 192).
- ► Replace the key battery as necessary (⟶ page 195).
- ► Use the replacement key.
- ► Use the emergency key to lock or unlock the vehicle (⟶ page 209).
- ► Have the vehicle and key checked at a qualified specialist workshop.

INTERFERENCE FROM A POWERFUL RADIO SIGNAL SOURCE

POSSIBLE CAUSES IF THE FUNCTION OF KEYLESS-GO IS IMPAIRED:

- high-voltage power lines
- mobile phones
- electronic devices (notebooks, tablets)
- shielding due to metallic objects or induction loops for electrical gate systems or automatic barriers
- charging stations

- ► Ensure sufficient distance between the key and potential sources of interference.

Activating or deactivating the automatic locking feature

Multimedia system:

Settings ▸▸ Vehicle ▸▸ Open/close

ⓘ The vehicle is locked automatically when the vehicle is switched on and the wheels are turning faster than walking pace.

- ► Activate or deactivate Automatic locking.

IN THE FOLLOWING SITUATIONS THERE IS A RISK OF BEING LOCKED OUT WHEN THE FUNCTION IS ACTIVATED:

- The vehicle is being towed or pushed.
- The vehicle is being tested on a roller dynamometer.

Power closing function

⚠ **WARNING**
Risk of becoming trapped when the doors close automatically

Body parts or objects can become trapped, causing injuries.

- ► Ensure that no body parts or objects are in the closing area.
- ► Automatic closing of the doors can be cancelled by pulling the outer or inner door handle.

If you push the door into the lock to the first detent position, the power closing function will automatically pull the door into the lock.

ⓘ If the vehicle is locked from the outside, or while pulling away, an automatic closing of the doors can be triggered.

Locking/unlocking the vehicle with the emergency key

UNLOCKING THE DRIVER'S DOOR WITH THE EMERGENCY KEY

ⓘ If you unlock and open the driver's door with the emergency key, the anti-theft alarm system will be triggered.

ⓘ If you unlock the driver's door with the emergency key, the boot lid will not be unlocked.

ⓘ Information on starting the vehicle in emergency operation mode (⟶ page 328).

Vehicles without KEYLESS-GO

► Remove the emergency key (⟶ page 194).

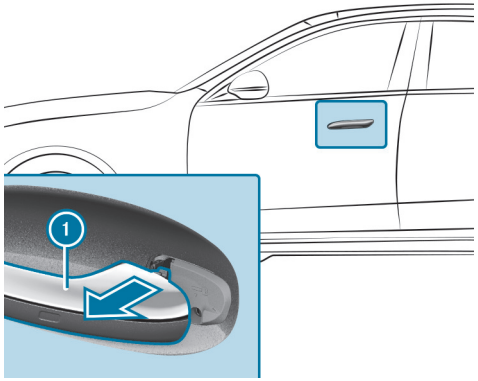

► Pull out the door handle (1) slightly and hold it in position.

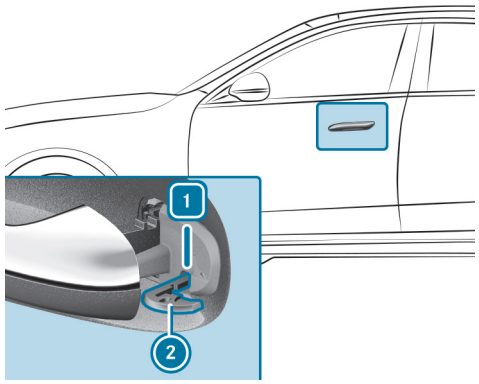

► Insert the emergency key (2) into the lock cylinder as shown.

► Turn the emergency key (2) anti-clockwise to position [1].

► Turn the emergency key (2) back to its starting position.

► Remove the emergency key (2) and release the door handle (1).

Vehicles with KEYLESS-GO

► Remove the emergency key (⟶ page 194).

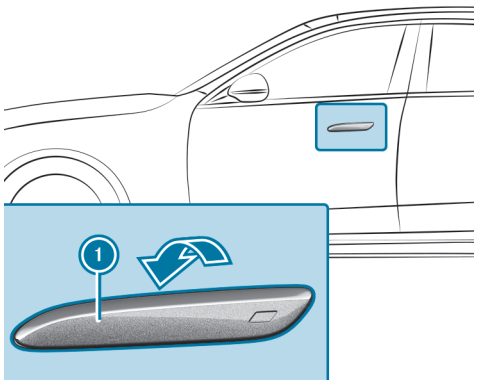

If the door handle is retracted:

- Insert a flat, non-metallic object behind the retracted door handle (1) from above and pry it slightly outward.
- Reach behind the door handle (1) from below, pull it outward to the pressure point and hold it in position.

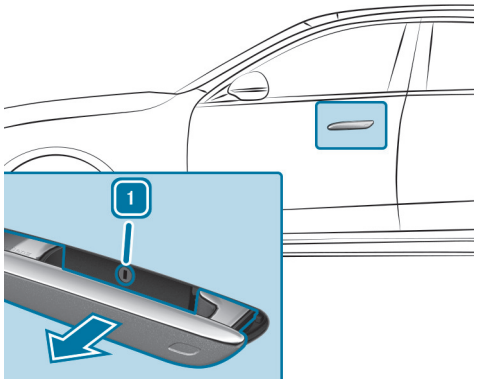

If the door handle is extended:

- Pull the door handle (1) outward to the pressure point and hold it in position.
- Insert the emergency key into the lock cylinder.
- Turn the emergency key anti-clockwise to position 1.
- Forcefully pull the door handle (1) outward past the pressure point.
- Turn the emergency key back to its starting position.
- Remove the emergency key and release the door handle.

You can watch an animation on this topic via the following link:

LOCKING THE DOORS

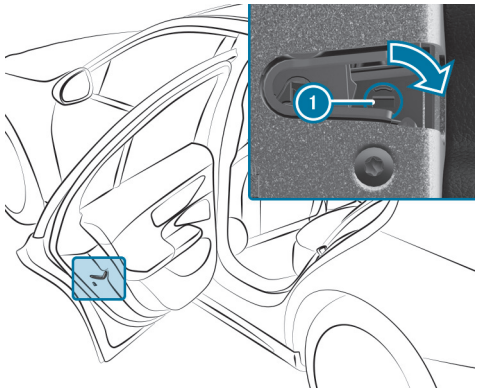

- Insert a suitable object, e.g.the emergency key, into the opening (1) on the door lock.
- **To lock the left-hand side of the vehicle:** turn the emergency key clockwise as far as it will go.
- **To lock the right-hand side of the vehicle:** turn the emergency key anti-clockwise as far as it will go.

If the locked door is then closed, it can no longer be opened from the outside.

Boot

Opening the boot lid

DANGER
Danger to life from toxic exhaust gas when the boot lid is open

Combustion engines emit toxic exhaust gases suchas carbon monoxide. Inhaling these exhaust gases is hazardous to health and leads to poisoning. Exhaust gases can enter the vehicle interior if the boot lid is open when the engine is running, especially if the vehicle is in motion.

- Always switch off the engine before opening the boot lid.
- Never drive with the boot lid open.

NOTE
Damage to the boot lid by obstacles above the vehicle

The boot lid swings upwards when it is opened.

- Therefore, make sure that there is sufficient clearance above the boot lid.

- Pull the boot lid handle.
- **Vehicles with HANDS-FREE ACCESS:** perform a kicking motion underneath the bumper (⟶ page 215).

VEHICLES WITH BOOT LID CONVENIENCE CLOSING

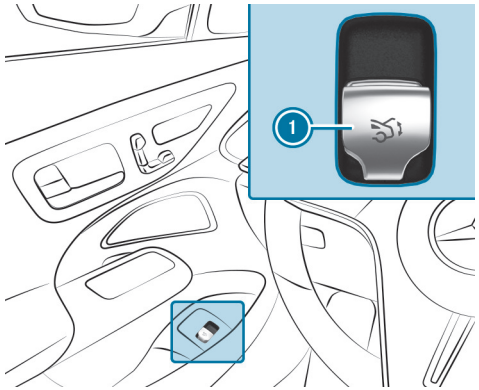

- Pull the remote operating switch (1) until the boot lid opens.

or

- Press and hold the button on the key.
- If the boot lid is stopped in an intermediate position, pull it upwards. Release it as soon as it begins to open.
- With the boot lid opening limiter activated, manually pull the stopped boot lid upwards.

If an obstacle obstructs the boot lid during the automatic opening process, blockage detection will stop the boot lid. The automatic blockage detection function serves solely as an aid and is not a substitute for your attentiveness.

Closing the boot lid

WARNING
Risk of injury from unsecured items in the vehicle

If objects, luggage or loads are not secured or not secured sufficiently, they could slip, tip over or be thrown around and thereby hit vehicle occupants.

There is a risk of injury, particularly in the event of sudden braking or a sudden change in direction.

- ► Always stow objects in such a way that they cannot be thrown around.
- ► Before the journey, secure objects, luggage or loads against slipping or tipping over.

Observe the information on loading the vehicle.
Notes on closing the boot lid: your vehicle is equipped with automatic Smart-Key recognition.

NOTE THAT THE BOOT LID WILL NOT BE LOCKED AND WILL POP BACK OPEN IF THE FOLLOWING SITUATION OCCURS:

- You have locked the vehicle and closed the boot lid while a key belonging to the vehicle is inside the vehicle and is detected.
  and
- A second key belonging to the vehicle is not detected outside the vehicle.

Automatic SmartKey recognition serves solely as an aid and is not a substitute for your attentiveness.

- ► Before locking, ensure that at least one key belonging to the vehicle is outside the vehicle.
  This also applies to the Digital Vehicle Key.
- ► **To close the boot lid:** pull the boot lid downwards using the handle recess and push it closed.

Vehicles with boot lid convenience closing: if you lightly push the boot lid closed, the power closing function will automatically pull the boot lid into the lock.

VEHICLES WITH BOOT LID CONVENIENCE CLOSING

WARNING
Risk of becoming trapped during automatic closing of the boot lid

Parts of the body could become trapped. There may be people in the closing area.

- ► Make sure that nobody is in the vicinity of the closing area.
- ► Use one of the following options to stop the closing process:
  - Press the button on the key.
  - Press or pull the remote operating switch on the driver's door.
  - Press the closing or locking button on the boot lid.
  - Pull the boot lid handle.

Vehicles with HANDS-FREE ACCESS: it is also possible to stop the closing process by performing a kicking motion below the rear bumper.

- ► Pull the boot lid handle. Release it as soon as it begins to close.

- If the boot lid is stopped in an intermediate position, push it downwards.
  The boot lid will continue to close.

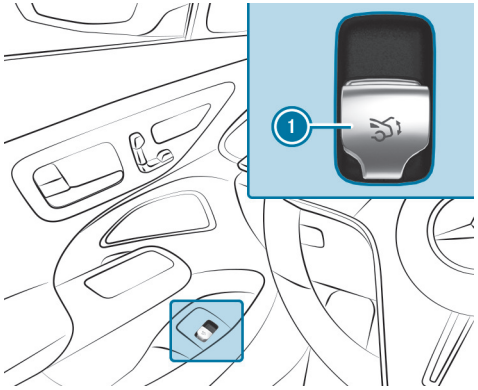

- Push the remote operating switch (1) until the boot lid is fully closed.

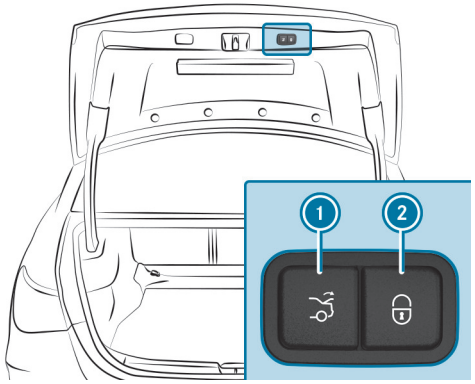

- Press the closing button (1) on the boot lid.

VEHICLES WITH KEYLESS-GO

- Press the locking button (2) on the boot lid.
  If a key is detected outside the vehicle, the boot lid will close and the vehicle will be locked.

> **Vehicles with Digital Vehicle Key:** this also applies to the Digital Vehicle Key if the function is activated and the Digital Vehicle Key is paired with the vehicle.

- With the boot lid completely open, press and hold the button on the key. The key must be in the vicinity of the vehicle.

VEHICLES WITH HANDS-FREE ACCESS

- With the boot lid completely open, perform a kicking motion with your foot below the bumper (→ page 215).

BOOT LID AUTOMATIC REVERSING FUNCTION

The boot lid is equipped with automatic blockage detection with a reversing function. If an obstacle obstructs the boot lid during the automatic closing process, it will automatically open again. The automatic reversing function serves solely as an aid and is not a substitute for your attentiveness.

- During the closing process, ensure that no body parts remain within the closing area.

WARNING
Risk of becoming trapped despite reversing function

THE REVERSING FUNCTION WILL NOT REACT:

- to soft, light and thin objects, e.g. fingers
- towards the end of the closing procedure

In these situations in particular, the reversing function cannot prevent someone being trapped.

► Ensure that no body parts are in the closing area.

► If someone is trapped, use one of the following options:
  - Press the button on the key.
  - Press the remote operating switch on the driver's door.
  - Press the closing or locking button on the boot lid.
  - Pull the boot lid handle.

HANDS-FREE ACCESS function

HANDS-FREE ACCESS allows you to open and close the boot lid, or even stop the opening and closing process at any point, by performing a kicking motion under the bumper. The transmission must be in position P for this function.

THE KICKING MOTION TRIGGERS THE OPENING OR CLOSING PROCESS ALTERNATELY.

- If you stop the boot lid opening process with a kicking motion, the boot lid is closed with the next kicking motion.
- If you stop the boot lid closing process with a kicking motion, the boot lid is opened with the next kicking motion.

IN THE FOLLOWING CASES, THE BOOT LID CAN ONLY BE CLOSED WITH HANDS-FREE ACCESS:

- If the vehicle is switched on and the key's unlocking function is set to unlock the driver's door only when unlocking the vehicle (→ page 193).
- If the vehicle has been centrally locked from the inside (→ page 205).

Observe the notes when opening (→ page 212) and closing (→ page 213) the boot lid.

A warning tone sounds while the boot lid is opening or closing.

WARNING
Risk of burns caused by a hot exhaust system

The vehicle exhaust system can become very hot. If you use HANDS-FREE ACCESS, you could burn yourself by touching the exhaust system.

► Always ensure that you only make a kicking movement within the detection range of the sensors.

NOTE
Damage to the vehicle caused by unintentionally opening the boot lid or a door

- when using an automatic car wash
- when using a high pressure cleaner

► Deactivate the function of the key in these situations.

or

► Make sure that the key is at a minimum distance of 3 m (high-pressure cleaner) or 6 m (automatic car wash) away from the vehicle.

Vehicles with Digital Vehicle Key:

NOTE
Vehicle damage due to unintentional opening of the boot lid or one of the doors

- when using a car wash
- when using a high-pressure cleaner

► In these situations, switch off the Digital Vehicle Key.

or

► Ensure that the Digital Vehicle Key is at least 3 m (high-pressure cleaner) or 6 m (car wash) away from the vehicle.

Ensure that you are standing firmly on the ground when performing the kicking motion. Otherwise you could lose your balance, e.g.in icy conditions.

OBSERVE THE FOLLOWING NOTES:

- The key is behind the vehicle.
  If the key is not recognised:
  - Take the key in your hand.
    or
  - Ensure that the function of the key is activated (⟶ page 80).
- **Vehicles with Digital Vehicle Key:** the Digital Vehicle Key is behind the vehicle.
- Stand at least 30 cm away from the vehicle when performing the kicking motion.
- Do not come into contact with the bumper when performing the kicking motion.
- Do not carry out the kicking motion too slowly.
- The kicking motion must be towards the vehicle and back again.
- **Vehicles with trailer hitch:** perform the kicking motion to the left or to the right of the ball head.

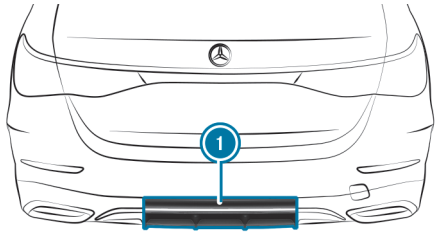

1 Detection range of the sensors

If several consecutive kicking motions are not successful, wait ten seconds.

SYSTEM LIMITS

THE SYSTEM MAY BE IMPAIRED OR INOPERATIVE IN THE FOLLOWING CASES:

- The sensors are dirty, e.g.due to road salt or snow.
- The kicking motion is performed with a prosthetic leg.

THE BOOT LID COULD BE OPENED OR CLOSED UNINTENTIONALLY IN THE FOLLOWING SITUATIONS:

- A person's arms or legs are moving within the sensor detection range, e.g.when polishing the vehicle or picking up objects.
- Objects are moved or placed behind the vehicle, e.g.the hose of a fuel dispenser, a charging cable or luggage.
- Tension belts, tarps or other covers are pulled over the bumper.
- A protective mat with a length reaching over the loading sill down into the detection range of the sensors is used.
- The protective mat is not secured correctly.
- **Vehicles with trailer hitch:** work is being carried out on the trailer hitch, trailers or rear bicycle racks.

Deactivate the function of the key (⟶ page 80) or do not carry the key about your person in such situations.

You can watch an animation on this topic via the following link:

Activating/deactivating the boot lid opening limiter

Multimedia system:

Settings » Vehicle » Open/close

► Activate or deactivate Opening height limiter.

This function prevents the boot lid from hitting a low garage ceiling, for example.

Side windows

Opens and closes the side windows

WARNING
Risk of becoming trapped when opening a side window

When you open a side window, parts of the body could be drawn in or become trapped between the side window and window frame.

- When opening, make sure that nobody is touching the side window.
- If someone is trapped, release the button immediately or pull it in order to close the side window again.

WARNING
Risk of becoming trapped when closing a side window

When closing a side window, body parts could be trapped in the closing area in the process.

- When closing, make sure that no body parts are in the closing area.
- If someone is trapped, release the button immediately or press the button in order to reopen the side window.

WARNING
Risk of becoming trapped when children operate the side window

Children could become trapped if they operate the side windows, particularly when unattended.

- Activate the child safety lock for the side windows in the rear passenger compartment.
- When exiting the vehicle, always lock the vehicle and take the key with you.
- Never leave children unattended in the vehicle.

This also applies to the Digital Vehicle Key.

Requirements:

- The power supply or the vehicle has been switched on.

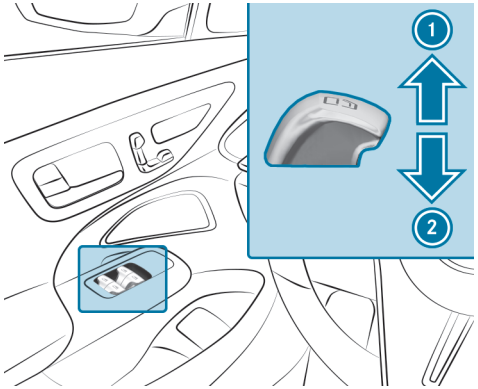

1 Closing
2 Opening

The buttons on the driver's door take precedence.

- **To start automatic operation:** press the button beyond the point of resistance or pull and release it.
- **To interrupt automatic operation:** press or pull the button again.

You can continue to operate the side windows with the vehicle switched off.

The function will also remain available until the doors are closed again.

AUTOMATIC REVERSING FUNCTION OF THE SIDE WINDOWS
If an obstacle impedes a side window during the closing process, the side window will open again automatically. The automatic reversing function serves solely as an aid and is not a substitute for your attentiveness.

- During the closing process, ensure that no body parts remain within the closing area.

WARNING
Risk of becoming trapped despite there being reversing protection on the side window

THE REVERSING FUNCTION DOES NOT REACT:

- to soft, light and thin objects, e.g. fingers.
- during resetting.

The reversing function cannot prevent someone from becoming trapped in these situations.

- During the closing process, make sure that no body parts are in the closing area.
- If someone becomes trapped, press the button to open the side window again.

Automatic function of the side windows

IN THE FOLLOWING CASES, THE SIDE WINDOWS WILL BE CLOSED AUTOMATICALLY WHEN THE VEHICLE IS SWITCHED OFF:

- if it starts to rain
  Rain will be detected by a rain sensor on the windscreen.
- in extreme temperatures
- after a certain time (depending on the on-board electrical system voltage)
- if there is a malfunction in the power supply

The side windows will be closed as far as the ventilation position.

Vehicles with a panorama sliding sunroof: the side windows will be closed completely if the sliding sunroof is open.

If the side windows are obstructed during automatic closing, the side window concerned will open again slightly. After another automatic closing process, the automatic function may be deactivated. The automatic function will be active again the next time the vehicle is started.

Convenience opening (ventilating the vehicle before starting a journey)

WARNING
Risk of entrapment when opening a side window

When opening a side window, parts of the body could be drawn in or become trapped between the side window and window frame.

- ► When opening, make sure that nobody is touching the side window.
- ► Release the button immediately if somebody becomes trapped.

Requirements:

- The key is in immediate proximity to the vehicle.

► Press and hold the button on the key.

THE FOLLOWING FUNCTIONS ARE PERFORMED:

- The vehicle is unlocked.
- The side windows open.
- The panoramic sliding sunroof opens.
- The driver's seat ventilation is switched on.

If the roller sunblind of the panoramic sliding sunroof is closed, the roller sunblind is opened first.

► **Interrupt convenience opening:** Release the button.

► **Continue convenience opening:** Press and hold the button again.

Convenience closing (closing the vehicle from outside)

WARNING
Risk of entrapment due to not paying attention during convenience closing

When the convenience closing feature is operating, parts of the body could become trapped in the closing area of the side window and the sliding sunroof.

- ► When the convenience closing feature is operating, monitor the entire closing process and make sure that no body parts are in the closing area.

Requirements:

- The key is in immediate proximity to the vehicle.

- Press and hold the button on the key.

  THE FOLLOWING FUNCTIONS ARE PERFORMED:

  - The vehicle is locked.
  - The side windows are closed.
  - The panoramic sliding sunroof is closed.

- **To interrupt convenience closing:** release the button.
- **To continue convenience closing:** press and hold the button again.

Convenience closing also functions with KEYLESS-GO (⟶ page 206).

Rectifying problems with the side windows

WARNING
Risk of becoming trapped or fatally injured if reversing protection is not activated

If you close a side window again immediately after it has been blocked, the side window will close with increased or maximum force. The reversing function is then not active and body parts may become trapped.

- Make sure that no parts of the body are in the closing area.
- To stop the closing process, release the button or press the button again to reopen the side window.

A SIDE WINDOW CANNOT BE CLOSED AND THE REASON IS NOT IMMEDIATELY EVIDENT TO YOU

- Check to ensure that no impeding items are in the window guide.
- Adjust the side windows.

Adjusting the side windows

If a side window is obstructed during closing and reopens again immediately:

- Immediately pull and hold the corresponding button again until the side window closes, then hold the button for at least one second longer (readjustment).

  The side window will be closed without the automatic reversing function.

If the side window is obstructed again and reopens again immediately:

- Immediately pull and hold the corresponding button again until the side window closes, then hold the button for at least one second longer (readjustment).

  The side window will be closed without the automatic reversing function.
- If a side window is obstructed again during closing and reopens again slightly, consult a qualified specialist workshop.

THE SIDE WINDOWS CANNOT BE OPENED OR CLOSED WITH CONVENIENCE OPENING

POSSIBLE CAUSES:

- The key is not in the immediate vicinity of the vehicle.
- The key battery is at low capacity or is flat.

- Check the battery via the indicator lamp (⟶ page 192).

- Replace the key battery as necessary (⟶ page 195).

Sliding sunroof

Opening and closing the sliding sunroof

ⓘ The term "sliding sunroof" refers to the panoramic sliding sunroof.

⚠ **WARNING**
Risk of becoming trapped when the sliding sunroof is being opened and closed

Body parts may become trapped in the range of movement.

- ► During the opening and closing process, make sure that no body parts are in the sweep of the sliding sunroof.
- ► If someone is trapped, release the control panel immediately.

or

- ► Touch the control panel during automatic operation.
  The opening/closing process will be stopped.

⚠ **WARNING**
Risk of children becoming trapped if they operate the sliding sunroof

Children could become trapped if they operate the sliding sunroof, particularly when unattended.

- ► Never leave children unattended in the vehicle.
- ► When leaving the vehicle, always lock the vehicle and take the key with you.

This also applies to the Digital Vehicle Key.

WARNING
Risk of becoming trapped when the roller sunblind is being opened and closed

Body parts may become trapped between the roller sunblind and frame or sliding roof.

- ► During the opening or closing process, make sure that no body parts are in the roller sunblind's range of movement.
- ► If someone is trapped, release the control panel immediately.

or

- ► Touch the control panel during automatic operation.

  The opening/closing process will be stopped.

NOTE
Malfunction due to snow and ice

Snow and ice may cause the sliding sunroof to malfunction.

- ► Open the sliding sunroof only if it is free of snow and ice.

NOTE
Damage caused by moisture ingress

- ► Do not open the sliding sunroof if it has just rained.
- ► Do not open the sliding sunroof immediately after washing the vehicle in a car wash.

NOTE
Damage caused by protruding objects

Objects that protrude from the sliding sunroof may damage the seals.

- ► Do not allow anything to protrude from the sliding sunroof.

NOTE
Damage to panorama sliding sunroof caused by roof luggage rack

If the panorama sliding sunroof is opened when a roof luggage rack is fitted, the panorama sliding sunroof may be damaged by the roof luggage rack.

- ► Do not open the panorama sliding sunroof if a roof luggage rack is fitted.

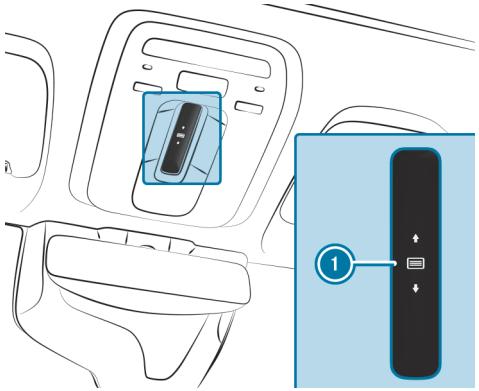

The sliding sunroof and the roller sunblind are operated using the control panel (1).

The panoramic sliding sunroof can only be operated when the roller sunblind is open.

- **To open:** swipe backwards across the control panel (1) and hold pressed.
- **To close:** swipe forwards across the control panel (1) and hold pressed.
- **To raise or lower:** press on the control panel (1) briefly.
- **To start automatic operation:** swipe forwards or backwards across the control panel (1).
- **To cancel automatic operation:** press on the control panel (1) again.
  The opening/closing process will be stopped.

AUTOMATIC REVERSING FUNCTION OF THE SLIDING SUNROOF
If an obstacle obstructs the sliding sunroof during the closing process, the sliding sunroof will open again automatically. The automatic reversing function serves solely as an aid and is not a substitute for your attentiveness.

- Keep the opening area and the guide rails free of debris (e.g.ice, snow or leaves).
- When closing the sliding sunroof, ensure that no body parts or objects are within the closing area.

⚠ **WARNING**
Risk of becoming trapped despite reversing function

THE REVERSING FUNCTION WILL NOT REACT:

- to soft, light and thin objects, e.g. fingers.
- towards the end of the closing procedure.
- during resetting.

- During the closing process, make sure that no body parts are in the closing area.
- If someone is trapped, release the control panel immediately.

or

- Touch the control panel during automatic closing.
  The closing process will be stopped.

AUTOMATIC REVERSING FUNCTION OF THE ROLLER SUNBLIND
If an obstacle obstructs the roller sunblind during the closing process, the roller sunblind will open again automatically. The automatic reversing function serves solely as an aid and is not a substitute for your attentiveness.

- Keep the opening area and the guide rails free of debris (e.g.ice, snow or leaves).
- When closing the roller sunblind, ensure that no body parts or objects are within the range of movement.

WARNING
Risk of becoming trapped despite reversing function

In particular, the reversing function does not react to soft, light and thin objects, e.g. fingers.

- ► When closing the roller sunblind, make sure that no body parts are in the range of movement.
- ► If someone is trapped, release the control panel immediately.

or

- ► Touch the control panel during automatic closing.
  The closing process will be stopped.

Automatic functions of the sliding sunroof

The term "sliding sunroof" refers to the panorama sliding sunroof.

THE SLIDING SUNROOF WILL BE CLOSED AUTOMATICALLY WHEN THE VEHICLE HAS BEEN SWITCHED OFF IN THE FOLLOWING SITUATIONS:

- if it starts to rain
  Rain will be detected by a rain sensor on the windscreen.
- in extreme temperatures
- after a certain time (depending on the on-board electrical system voltage)
- if there is a malfunction in the power supply

The sliding sunroof will rise at the rear in order to continue ventilating the vehicle interior.

If the sliding sunroof is obstructed during an automatic closing procedure, it will be opened again slightly. The automatic function for the sliding sunroof and the side windows will then be deactivated.

RAIN CLOSING FUNCTION WHEN DRIVING
Vehicles with a panorama sliding sunroof: if it starts to rain, the raised sliding sunroof will automatically be lowered while the vehicle is in motion.

AUTOMATIC LOWERING FUNCTION
Vehicles with a panorama sliding sunroof: if the sliding sunroof is raised at the rear, it will automatically be lowered slightly at higher speeds. At low speeds, it will be raised again automatically.

WARNING
Risk of becoming trapped by automatic lowering of the sliding sunroof

At higher speeds, the raised sliding sunroof will automatically be lowered slightly at the rear.

- ► Make sure that nobody reaches into the sliding sunroof's range of movement while the vehicle is in motion.
- ► If someone becomes trapped, touch the control panel.

Rectifying problems with the sliding sunroof

WARNING
Risk of becoming trapped or fatal injuries when the sliding sunroof is closed again

If you close the sliding sunroof again immediately after it has been blocked or reset, the sliding sunroof will close with increased or maximum force.

There is a risk of becoming trapped or even of fatal injuries!

- Make sure that no parts of the body are in the closing area.
- If someone is trapped, release the control panel immediately.

or

- Touch the control panel during automatic closing.
  The closing process will be stopped.

THE SLIDING SUNROOF CANNOT BE CLOSED AND THE REASON IS NOT IMMEDIATELY EVIDENT

The term "sliding sunroof" refers to the panoramic sliding sunroof.

If the sliding sunroof is obstructed during closing and reopens again slightly:

- Immediately after automatic reversing, swipe forwards across the control panel (⟶ page 223) and hold it until the sliding sunroof is closed.
  The sliding sunroof will be closed with increased force.

If the sliding sunroof is obstructed again and opens again slightly:

- Repeat the previous step.
  The sliding sunroof will be closed again with increased force.

THE SLIDING SUNROOF OR THE ROLLER SUNBLIND ARE EXHIBITING JERKY MOVEMENTS DURING THE OPENING OR CLOSING PROCESS

- Reset the sliding sunroof and the roller sunblind.

Resetting the sliding sunroof and the roller sunblind

- Swipe forwards across the control panel (⟶ page 223) and hold it repeatedly until the sliding sunroof is completely closed.
- Swipe across the control panel and hold it for another second.
- Swipe across and hold the control panel until the roller sunblind is completely closed.
- Swipe across the control panel and hold it for another second.
- Use automatic operation to fully open and then close the sliding sunroof.

Roller sunblinds

Extending the rear side window roller sunblinds

NOTE
Damage to the inertia reel due to it snapping back

If suddenly snapped back, the inertia reel may be damaged.

- Always move the roller sun blind by hand.
- Do not drive with the roller sun blind hooked in and rear side windows opened at the same time.

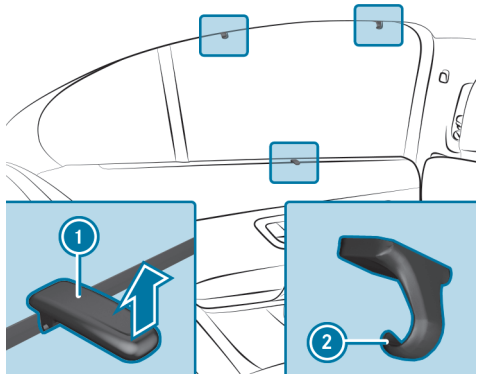

- Pull the roller sunblind out by tab (1) and hook it onto brackets (2) at the top of the window.

Extending or retracting the rear-window roller sunblind

WARNING
Risk of becoming trapped when extending or retracting the roller sunblind

Body parts may become trapped in the roller sunblind's range of movement.

- Ensure there are no body parts in the range of movement.
- If someone becomes trapped, briefly press the button again.
  The opening or closing process will briefly be stopped. The roller sunblind will then return to its starting position.

NOTE
Damage caused by objects

Objects can cause the roller sunblind to malfunction.

- Do not place any objects on the rear shelf.
- Ensure that the roller sunblind can move freely.

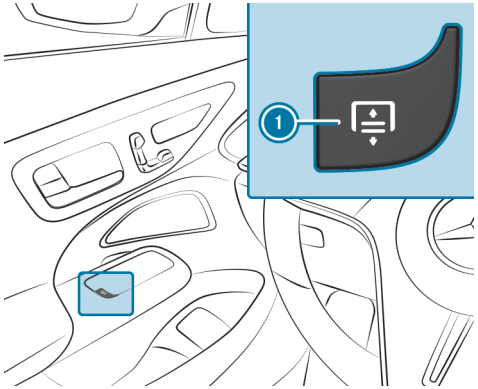

► **To extend or retract:** press button (1).

Anti-theft protection

Function of the immobiliser

The immobiliser prevents your vehicle from being started without the correct key.

This also applies to the Digital Vehicle Key.

The immobiliser is automatically activated when the vehicle is switched off, and deactivated when the vehicle is switched on.

ATA (Anti-Theft Alarm system)

FUNCTION OF THE ABW SYSTEM

IF THE ABW SYSTEM IS ACTIVATED, A VISUAL AND AUDIBLE ALARM IS ISSUED IN THE FOLLOWING SITUATIONS:

- when a door is opened
- when the boot lid is opened
- when the bonnet is opened
- when the interior protection is triggered (⟶ page 232)
- when the tow-away protection is triggered (⟶ page 231)

ⓘ **Vehicles with Digital Vehicle Key:** The ABW system works with the Digital Vehicle Key in the same way as with the conventional vehicle key.

THE ABW SYSTEM IS ACTIVATED AUTOMATICALLY AFTER APPROXIMATELY TEN SECONDS IN THE FOLLOWING SITUATIONS:

- After locking the vehicle with the key
- After locking the vehicle using KEYLESS-GO
- After locking the vehicle with the NFC function (**vehicles with Digital Vehicle Key:**)

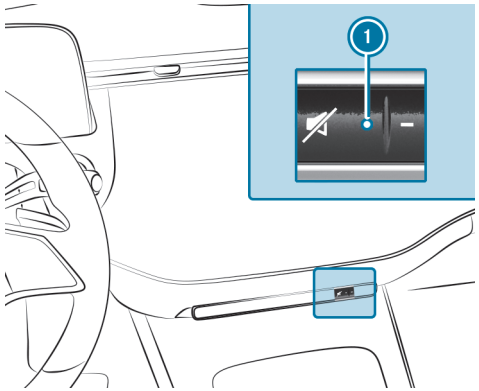

The indicator lamp (1) flashes when the ABW system is activated.

THE ABW SYSTEM IS DEACTIVATED AUTOMATICALLY IN THE FOLLOWING SITUATIONS:

- After unlocking the vehicle with the key
- After unlocking the vehicle using KEYLESS-GO

- After unlocking the vehicle with the NFC function (**vehicles with Digital Vehicle Key**)
- After pressing the start/stop button with the key in the marked space (⟶ page 328)

DEACTIVATING THE ABW SYSTEM ALARM

► Press the button , , or on the key.

or

► Start the vehicle in emergency operation mode (⟶ page 328)

DEACTIVATING THE ALARM USING KEYLESS-GO:

► With the key outside the vehicle, touch the inner surface of the door handle.

The distance between key and vehicle here should not be greater than 1 m.

This also applies to the Digital Vehicle Key.

Function of tow-away protection

If a change in the vehicle's inclination is detected, a visual and audible alarm is issued. Tow-away protection must be switched on for this function.

TOW-AWAY PROTECTION IS AUTOMATICALLY PRIMED AFTER ABOUT 60 SECONDS:

- After locking the vehicle with the key

  This also applies to the Digital Vehicle Key.
- After locking the vehicle using KEYLESS-GO

  This also applies to the Digital Vehicle Key.
- After locking the vehicle with the NFC function (**vehicles with Digital Vehicle Key**)

TOW-AWAY PROTECTION IS ONLY PRIMED WHEN THE FOLLOWING COMPONENTS ARE CLOSED:

- Doors
- Boot lid

TOW-AWAY PROTECTION IS AUTOMATICALLY DEACTIVATED:

- After pressing the button or on the key
- After starting the vehicle in emergency operation mode (⟶ page 328)
- After unlocking the vehicle using KEYLESS-GO

  This also applies to the Digital Vehicle Key.
- After unlocking the vehicle with the NFC function (**vehicles with Digital Vehicle Key**)
- When using HANDS-FREE ACCESS

Information on collision detection for a parked vehicle (⟶ page 410).

Priming/deactivating tow-away protection

Multimedia system:

Settings ▸▸ Vehicle ▸▸ Open/close ▸▸ Vehicle protection

► Activate or deactivate Tow-away protection.

TOW-AWAY PROTECTION IS ENABLED AGAIN IN THE FOLLOWING CASES:

- The vehicle is unlocked again.
- A door is opened.

- The vehicle is locked again.

Function of the interior protection

A visual and audible alarm is issued if motion is detected in the vehicle interior. Interior protection must be switched on for this function.

INTERIOR PROTECTION IS ACTIVATED AUTOMATICALLY AFTER APPROX-IMATELY TEN SECONDS:

- After locking the vehicle with the key
  This also applies to the Digital Vehicle Key.
- After locking the vehicle using KEYLESS-GO
  This also applies to the Digital Vehicle Key.
- After locking the vehicle with the NFC function (**vehicles with Digital Vehicle Key**)

INTERIOR PROTECTION IS ONLY ACTIVATED WHEN THE FOLLOWING COMPONENTS ARE CLOSED:

- Doors
- Boot lid

INTERIOR PROTECTION IS AUTOMATICALLY DEACTIVATED:

- After pressing the button or on the key
- After starting the vehicle in emergency operation mode (⟶ page 328)
- After unlocking the vehicle using KEYLESS-GO
  This also applies to the Digital Vehicle Key.
- After unlocking the vehicle with the NFC function (**vehicles with Digital Vehicle Key**)
- When using HANDS-FREE ACCESS

THE FOLLOWING SITUATIONS CAN LEAD TO A FALSE ALARM:

- When there are moving objects suchas mascots in the vehicle interior
- If a side window is open
- If the panoramic sliding sunroof is open

Priming/deactivating interior protection

Multimedia system:

Settings » Vehicle » Open/close » Vehicle protection

▶ Activate or deactivate Interior protection.

INTERIOR PROTECTION IS PRIMED AGAIN IN THE FOLLOWING CASES:

- The vehicle is unlocked again.
- A door is opened.
- The vehicle is locked again.

Back to Contents

Seats and stowing

This interactive PDF works like a website – tap or click a button to jump straight to where you want to go.
You can return here at any time via the navigation bar at the top left.

Notes on correct positioning of the driver's seat
Notes on grab handles
Seats
Steering wheel
Easy entry and exit feature
Memory function
Stowage areas
Cup holders
Sockets
Charging a mobile phone wirelessly
Fitting and removing floor mats
Fitting and removing a pennant staff

Notes on correct positioning of the driver's seat

WARNING
Risk of accident due to adjusting the vehicle settings while the vehicle is in motion

YOU COULD LOSE CONTROL OF THE VEHICLE IN THE FOLLOWING SITUATIONS IN PARTICULAR:

- if you adjust the driver's seat, the head restraint, the steering wheel or the mirror while the vehicle is in motion
- if you fasten your seat belt while the vehicle is in motion

► Before starting the vehicle: in particular, adjust the driver's seat, head restraint, steering wheel and mirror, and fasten your seat belt.

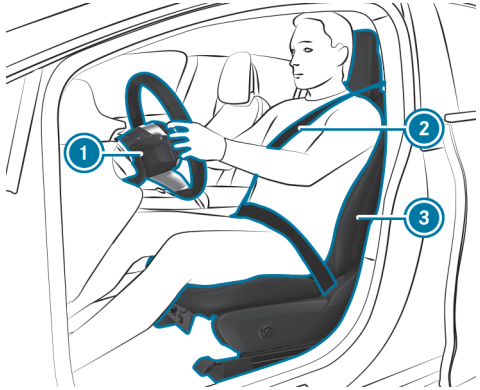

ENSURE THE FOLLOWING WHEN ADJUSTING THE STEERING WHEEL (1), SEAT BELT (2) AND DRIVER'S SEAT (3):

- You are sitting as far away as possible from the driver's airbag, taking the following points into consideration:
- You are sitting in an upright position
- Your thighs are supported slightly by the seat cushion.
- Your legs are not fully extended and you can actuate all pedals with ease
- The back of your head is supported at eye level by the centre of the head restraint
- You can hold the steering wheel with your arms slightly bent
- You can move your legs freely
- You can easily see all notifications on the driver display.
- You have a good overview of the traffic conditions
- Observe the notes on correct fastening of the seat belt (⟶ page 141).

Notes on grab handles

WARNING
Risk of injury due to excessive load on the grab handles

If you apply your full body weight to the grab handle or pull it abruptly, the grab handle may be damaged or come loose from its anchorage. This may result in injuries.

- Use the grab handles only to stabilise the seating position or to assist in getting in and out of the seat.

Seats

Adjusting the front seat manually and electrically (with Seat Comfort Package)

WARNING
Risk of becoming trapped if the seats are adjusted by children

Children could become trapped if they adjust the seats, particularly when unattended.

- When leaving the vehicle, always take the key with you and lock the vehicle.
- Never leave children unattended in the vehicle.

You can adjust the seats when the vehicle is switched off.

WARNING
Risk of becoming trapped if the seats are adjusted

When adjusting a seat, you may trap yourself or a vehicle occupant, e.g. on the seat guide rail.

- Make sure that no part of the body is within the seat's range of motion when adjusting a seat.

This also applies to the Digital Vehicle Key.

Observe the safety notes on "Airbags" and "Children in the vehicle".

WARNING
Risk of accident due to the driver's seat not being engaged

The driver's seat may move unexpectedly while driving.

This could cause you to lose control of the vehicle.

- Always make sure that the driver's seat is engaged before starting the vehicle.

WARNING
Risk of accident due to adjusting the vehicle settings while the vehicle is in motion

YOU COULD LOSE CONTROL OF THE VEHICLE IN THE FOLLOWING SITUATIONS IN PARTICULAR:

- if you adjust the driver's seat, the head restraint, the steering wheel or the mirror while the vehicle is in motion
- if you fasten your seat belt while the vehicle is in motion

- Before starting the vehicle: in particular, adjust the driver's seat, head restraint, steering wheel and mirror, and fasten your seat belt.

WARNING
Risk of becoming trapped if the seat height is adjusted carelessly

If you adjust the seat height carelessly, you or other vehicle occupants could be trapped and thereby injured.

Children in particular could accidentally press the electrical seat adjustment buttons and become trapped.

- While moving the seats, make sure that hands or other body parts do not get under the lever assembly of the seat adjustment system.

WARNING
Risk of injury due to head restraints not being fitted or being adjusted incorrectly

If head restraints have not been installed or have not been adjusted correctly, there is an increased risk of injury in the head and neck area, e.g. in the event of an accident or when braking.

- Always drive with the head restraints fitted.
- Before driving off, make sure for every vehicle occupant that the centre of the head restraint supports the back of the head at about eye level.

Adjust the head restraint fore-and-aft position so that it is as close as possible to the back of your head.

WARNING
Risk of injury or death due to incorrect seat position

The seat belt will not offer the intended level of protection if you have not moved the seat backrest to an almost vertical position.

In particular, you may slip under the seatbelt and injure yourself.

- Adjust the seat properly before beginning your journey.
- Always ensure that the seat backrest is in an almost vertical position and that the shoulder section of your seat belt is routed across the centre of your shoulder.

WARNING
Risk of potentially fatal injuries due to objects trapped under the front passenger seat

Objects trapped under the front passenger seat may interfere with the function of the automatic front passenger airbag shutoff or damage the system.

- Do not stow any objects under the front passenger seat.
- When the front passenger seat is occupied, ensure that no objects have become trapped beneath the front passenger seat.

NOTE
Damage to the seats when adjusting

The seats may be damaged by objects when adjusting the seats.

- When adjusting the seats, make sure that there are no objects in the footwell, under or behind the seats.

NOTE
Damage to the headliner during adjustment

The headliner may be damaged when you adjust the front seats.

- Adjust the head restraints first before adjusting each seat height.

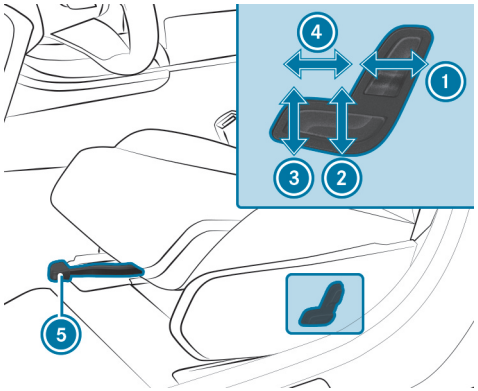

1. Seat backrest inclination
2. Seat height
3. Seat cushion inclination
4. Seat cushion length
5. Seat fore-and-aft position

- **To adjust the seat fore-and-aft position:** lift the lever 5 and slide the seat into the desired position.
- Ensure that the seat is properly secured in position.

Adjusting the front seat fully electrically

WARNING
Risk of becoming trapped if the seats are adjusted by children

Children could become trapped if they adjust the seats, particularly when unattended.

- When leaving the vehicle, always take the key with you and lock the vehicle.
- Never leave children unattended in the vehicle.

This also applies to the Digital Vehicle Key.

You can adjust the seats when the vehicle is switched off.

WARNING
Risk of becoming trapped if the seats are adjusted

When adjusting a seat, you may trap yourself or a vehicle occupant, e.g. on the seat guide rail.

► Make sure that no part of the body is within the seat's range of motion when adjusting a seat.

Observe the safety notes on "Airbags" and "Children in the vehicle".

WARNING
Risk of accident due to adjusting the vehicle settings while the vehicle is in motion

YOU COULD LOSE CONTROL OF THE VEHICLE IN THE FOLLOWING SITUATIONS IN PARTICULAR:

- if you adjust the driver's seat, the head restraint, the steering wheel or the mirror while the vehicle is in motion
- if you fasten your seat belt while the vehicle is in motion

► Before starting the vehicle: in particular, adjust the driver's seat, head restraint, steering wheel and mirror, and fasten your seat belt.

WARNING
Risk of becoming trapped if the seat height is adjusted carelessly

If you adjust the seat height carelessly, you or other vehicle occupants could be trapped and thereby injured.

Children in particular could accidentally press the electrical seat adjustment buttons and become trapped.

► While moving the seats, make sure that hands or other body parts do not get under the lever assembly of the seat adjustment system.

WARNING
Risk of injury due to head restraints not being fitted or being adjusted incorrectly

If head restraints have not been installed or have not been adjusted correctly, there is an increased risk of injury in the head and neck area, e.g. in the event of an accident or when braking.

► Always drive with the head restraints fitted.

► Before driving off, make sure for every vehicle occupant that the centre of the head restraint supports the back of the head at about eye level.

Adjust the head restraint fore-and-aft position so that it is as close as possible to the back of your head.

WARNING
Risk of injury or death due to incorrect seat position

The seat belt will not offer the intended level of protection if you have not moved the seat backrest to an almost vertical position.

In particular, you may slip under the seatbelt and injure yourself.

- Adjust the seat properly before beginning your journey.
- Always ensure that the seat backrest is in an almost vertical position and that the shoulder section of your seat belt is routed across the centre of your shoulder.

WARNING
Risk of potentially fatal injuries due to objects trapped under the front passenger seat

Objects trapped under the front passenger seat may interfere with the function of the automatic front passenger airbag shutoff or damage the system.

- Do not stow any objects under the front passenger seat.
- When the front passenger seat is occupied, ensure that no objects have become trapped beneath the front passenger seat.

NOTE
Damage to the seats when adjusting

The seats may be damaged by objects when adjusting the seats.

- When adjusting the seats, make sure that there are no objects in the footwell, under or behind the seats.

The switches for adjusting the seats do not move. You will therefore not detect any direct response from the switch while pressing the switch. Manipulation of the switch is demonstrated only by respective movement of the seat.

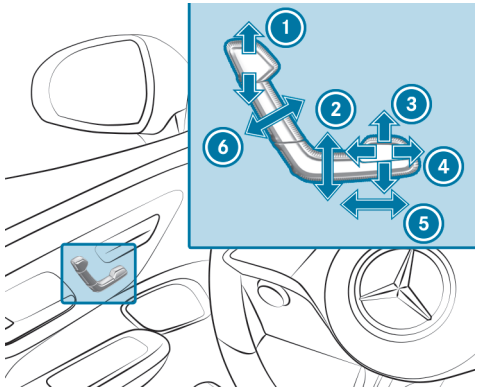

1. Head restraint height
2. Seat height
3. Seat cushion inclination
4. Seat cushion length
5. Seat fore-and-aft position
6. Seat backrest inclination

- Save the settings with the memory function (⟶ page 254).

The head restraint height is preset automatically when you adjust the seat height or the seat fore-and-aft position.

Adjusting the 4-way lumbar support

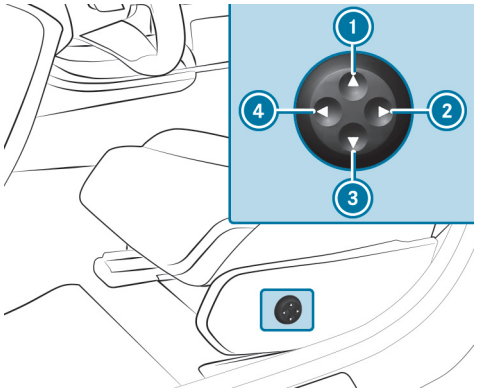

1 Higher
2 Softer
3 Lower
4 Firmer

► Use buttons 1 to 4 to adjust the contour of the backrest.

Head restraints

ADJUSTING THE HEAD RESTRAINTS ON THE FRONT SEATS

WARNING
Risk of accident due to adjusting the vehicle settings while the vehicle is in motion

YOU COULD LOSE CONTROL OF THE VEHICLE IN THE FOLLOWING SITUATIONS IN PARTICULAR:

- if you adjust the driver's seat, the head restraint, the steering wheel or the mirror while the vehicle is in motion
- if you fasten your seat belt while the vehicle is in motion

► Before starting the vehicle: in particular, adjust the driver's seat, head restraint, steering wheel and mirror, and fasten your seat belt.

WARNING
Risk of injury due to incorrectly adjusted head restraints

If head restraints have not been adjusted correctly, there is an increased risk of injury in the head and neck area, e.g. in the event of an accident or sudden braking.

► Before driving off, make sure for every vehicle occupant that the centre of the head restraint supports the back of the head at about eye level.

Adjust the head restraint fore-and-aft position so that it is as close as possible to the back of your head.

SEATS WITH MANUAL AND ELECTRIC SEAT ADJUSTMENT

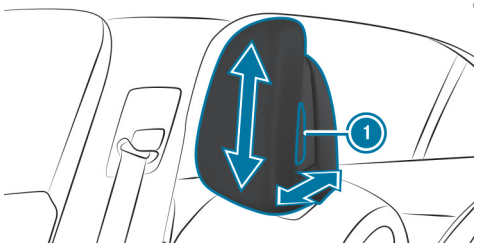

- Take hold of the head restraint on both sides and press release knob (1).
- **To move forwards or backwards:** pull the head restraint forwards or push it backwards.
- **To move upwards or downwards:** push the head restraint upwards or downwards.
- Let go of release knob (1).

SEATS WITH ELECTRIC SEAT ADJUSTMENT

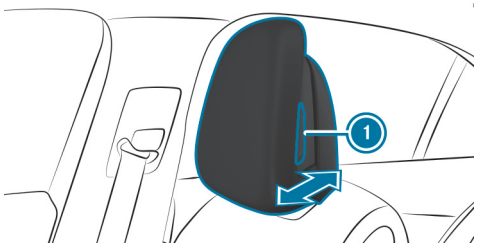

- Take hold of the head restraint on both sides and press release knob (1).
- **To move forwards or backwards:** pull the head restraint forwards or push it backwards.
- Let go of release knob (1).
- **To move upwards or downwards:** adjust the head restraint using the buttons on the door operating unit (⟶ page 238).

ADJUSTING THE HEAD RESTRAINTS OF THE REAR SEATS MANUALLY

WARNING
Risk of injury due to head restraints not being fitted or being adjusted incorrectly

If head restraints have not been installed or have not been adjusted correctly, there is an increased risk of injury in the head and neck area, e.g. in the event of an accident or when braking.

- Always drive with the head restraints fitted.
- Before driving off, make sure for every vehicle occupant that the centre of the head restraint supports the back of the head at about eye level.

Adjust the head restraint fore-and-aft position so that it is as close as possible to the back of your head.

Move all head restraints up at least to the first detent. If a head restraint is in the lowest, non-locked position, the respective seat must not be used.

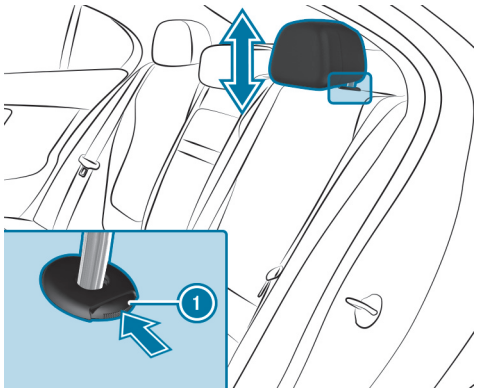

- **To raise:** push release knob (1) in the direction of the arrow and pull the head restraint up until it engages.
- **To lower:** press release knob (1) in the direction of the arrow and push the head restraint down until it engages.

FITTING/REMOVING THE REAR SEAT HEAD RESTRAINTS

WARNING
Risk of injury due to head restraints not being fitted or being adjusted incorrectly

If head restraints have not been installed or have not been adjusted correctly, there is an increased risk of injury in the head and neck area, e.g. in the event of an accident or when braking.

- Always drive with the head restraints fitted.
- Before driving off, make sure for every vehicle occupant that the centre of the head restraint supports the back of the head at about eye level.

Adjust the head restraint fore-and-aft position so that it is as close as possible to the back of your head.

REMOVING

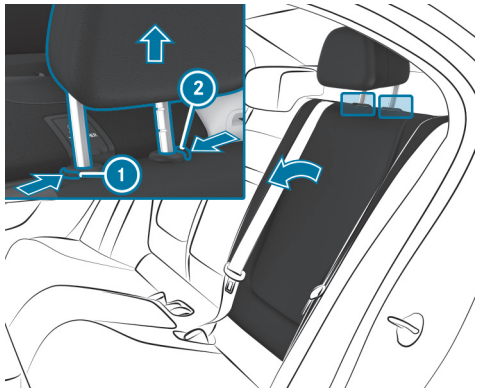

- Release the rear seat backrest and fold it forwards slightly (⟶ page 53).
- Press release knob (2) and pull the head restraint upwards as far as it will go.
  Release knob (1) will extend.
- Push both release knobs (1) and (2) at the same time in the direction of the arrow and pull out the head restraint.
- Fold the rear seat backrest back until it engages.

FITTING

- Release the rear seat backrest and fold it forwards slightly (⟶ page 53).
- Insert the head restraint such that the notches on the bar are on the left when viewed in the direction of travel.
- Push the head restraint down until it engages.
- Fold the rear seat backrest back until it engages.

Configuring the seat adjustments

Multimedia system:

Comfort » Seat

ADJUSTING THE LUMBAR OR SIDE BOLSTERS

- On the corresponding menu, adjust the air cushions for Lumbar or Side bolsters.

SETTING THE SEAT HEATING BALANCE

- Select Heating settings.
- Select Seat heating balance.
- Adjust the heat distribution for the desired seat.

Setting automatic seat adjustment

WARNING
Risk of becoming trapped during adjustment of the driver's seat after calling up a driver profile

Selecting a user profile may trigger an adjustment of the driver's seat to the position saved under the user profile. You or other vehicle occupants could be injured in the process.

- Make sure that when the position of driver's seat is being adjusted using the multimedia system, no people or body parts are in the seat's range of movement.

If there is a risk of someone becoming trapped, immediately stop the adjustment process by:

- a) Tapping the warning message on the central display.

or

- b) Pressing a position button of the memory function or a seat adjustment switch in the driver's door.

  The adjustment process is stopped.

Multimedia system:

Comfort » Seat » Position seat automatically

ADJUSTING THE POSITIONS OF THE DRIVER'S SEAT AND STEERING WHEEL MANUALLY TO THE RESPECTIVE BODY SIZE

The vehicle calculates a suitable position for the driver's seat and steering wheel based on the driver's body size and adopts this position straight away.

- **Set the unit of measurement:** cm or select ft/in.
- Set the body size using the scale.
- Select Start positioning.

  The position of the driver's seat and steering wheel are adapted to the set body size.

ⓘ You can also configure these settings via the Mercedes-Benz user account for your user profile. By synchronising the profiles in the vehicle and the Mercedes-Benz Connect profiles, you can adopt these settings for your vehicle. Additional information on MB apps (⟶ page 680).

ⓘ You can adjust the position of the driver's seat and steering wheel set by the vehicle using the button (⟶ page 236). The outside mirror can be adjusted accordingly using the buttons (⟶ page 296).

Overview of massage programmes

ⓘ Different massage programmes are available depending on the vehicle equipment:

- Classic massage Relaxing back massage.
- Relaxing massageRelaxing back massage with ascending wave motions and then soothing movements.
- Wave massage Regenerative massage with soothing waves across the back and in the seat cushion.
- Deep wave massage Wave-like movements in the cushion can promote blood flow and metabolic processes in the legs.
- Hot stone massage Massage combined with warmth. Starts with a back massage. In addition, you will start to notice warm pressure points, beginning in the pelvic area.
- Activating massage This massage helps to maintain your well-being and attention on long journeys. The stimulation function including deliberately chosen pauses will keep you awake and attentive during monotonous drives.

Selecting a massage program for the front seats

Multimedia system:

→ ⌂ ▶▶ Comfort

- Select Massage.
- Select a massage programme (⟶ page 245).
- Start the programme for the desired seat with ▶.
- **To set the massage intensity:** switch High intensity on or off.
- **To stop the massage:** select ■.

ⓘ Availability of this function depends on the respective equipment.

Resetting the seat adjustments

Multimedia system:

Comfort Seat

- Select Reset.
- Select for the desired seat.

Switching the seat heating on/off

WARNING
Risk of burns due to repeatedly switching on the seat heating

Repeatedly switching on the seat heating can cause the seat cushion and seat backrest padding to become very hot.

In particular, the health of persons with limited temperature sensitivity or a limited ability to react to high temperatures may be affected or they may even suffer burn-like injuries.

- Do not repeatedly switch on the seat heating.

To protect against overheating, the seat heating may be temporarily deactivated after it has been switched on repeatedly.

NOTE
Damage to the seats caused by objects or documents when the seat heater is switched on

When the seat heater is switched on, overheating may occur due to objects or documents placed on the seats e.g. seat cushions or child seats. This could cause damage to the seat surface.

- Make sure that no objects or documents are on the seats when the seat heater is switched on.

Requirements:

- The power supply is switched on.

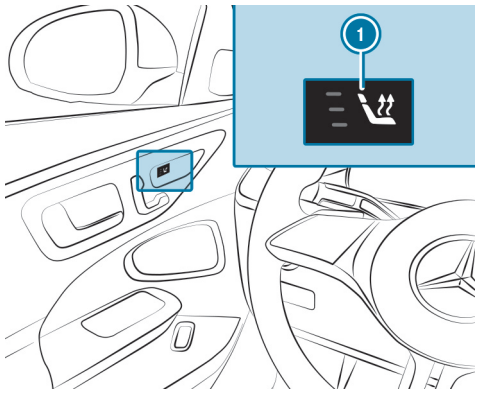

- Press the button 1 for the respective seat repeatedly until the desired heating level is reached.

  Depending on the heating level, up to three indicator lamps will light up. If all indicator lamps are off, the seat heating is switched off.

The seat heating will automatically switch down from the three heating levels after around 8, 10 and 20 minutes until the seat heating is switched off.

If you switch the power supply off and on again within 20 minutes, the previous setting of the seat heating for the driver's seat will remain active.

You can set the heat distribution of the heated sections on the seat cushions and seat backrests of the front seats in the multimedia system (⟶ page 244).

Setting the panel heating

Multimedia system:

Comfort >> Seat >> Heating settings >> Switch on panel heating

The armrests can be heated when the seat heating is switched on.

- Switch the function for the desired seats on or off.

Switching the seat ventilation on/off

Requirements:

- The power supply is switched on.

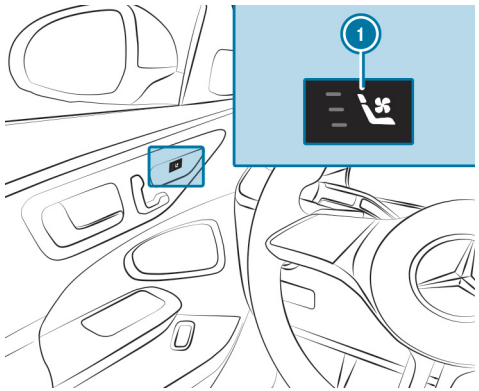

- Press the button 1 for the respective seat repeatedly until the desired blower setting is reached.

  Depending on the blower setting, up to three indicator lamps will light up. If all indicator lamps are off, the seat ventilation is switched off.

If you switch the power supply off and on again within 20 minutes, the previous seat ventilation setting for the driver's seat will remain active.

Steering wheel

Adjusting the steering wheel manually

WARNING
Risk of accident due to adjusting the vehicle settings while the vehicle is in motion

YOU COULD LOSE CONTROL OF THE VEHICLE IN THE FOLLOWING SITUATIONS IN PARTICULAR:

- if you adjust the driver's seat, the head restraint, the steering wheel or the mirror while the vehicle is in motion
- if you fasten your seat belt while the vehicle is in motion

► Before starting the vehicle: in particular, adjust the driver's seat, head restraint, steering wheel and mirror, and fasten your seat belt.

WARNING
Risk of entrapment for children when adjusting the steering wheel

Children could injure themselves if they adjust the steering wheel.

► Never leave children unattended in the vehicle.

► When leaving the vehicle, always take the key with you and lock the vehicle.

UNLOCKING

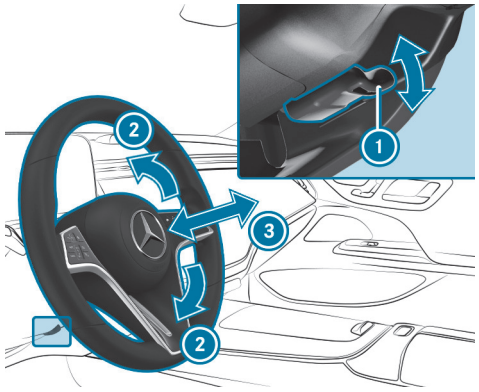

► Fold release lever (1) down as far as it will go.

► Adjust height (2) and distance (3) to the steering wheel.

LOCKING

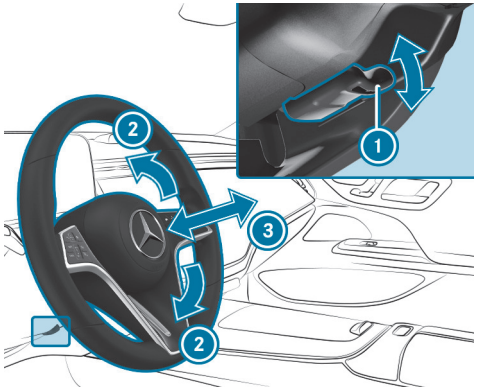

- ► Fold release lever (1) up as far as it will go.
- ► Check and make sure that the steering column is locked by moving the steering wheel.

Adjusting the steering wheel electrically

⚠ WARNING
Risk of accident due to adjusting the vehicle settings while the vehicle is in motion

YOU COULD LOSE CONTROL OF THE VEHICLE IN THE FOLLOWING SITUATIONS IN PARTICULAR:

- if you adjust the driver's seat, the head restraint, the steering wheel or the mirror while the vehicle is in motion
- if you fasten your seat belt while the vehicle is in motion

► Before starting the vehicle: in particular, adjust the driver's seat, head restraint, steering wheel and mirror, and fasten your seat belt.

⚠ WARNING
Risk of entrapment for children when adjusting the steering wheel

Children could injure themselves if they adjust the steering wheel.

► Never leave children unattended in the vehicle.

► When leaving the vehicle, always take the key with you and lock the vehicle.

This also applies to the Digital Vehicle Key.
The steering wheel can be adjusted when the power supply is disconnected.

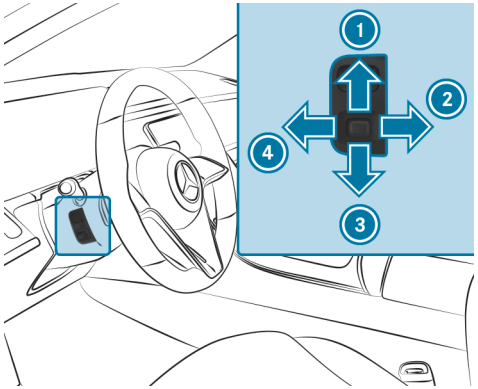

1 To move up
2 To move back
3 To move down
4 To move forward

► Save the settings with the memory function (⟶ page 254).

Decoupling the steering wheel heater from the seat heating

Requirements:

- The power supply or the vehicle has been switched on.
- The steering wheel heater and the seat heating are linked.

Multimedia system:

Comfort » Seat » Heating settings

The function is switched on by default. The steering wheel heater is automatically activated and deactivated when the seat heating is switched on or off.

► Tap on Switch on steering wheel heater.

The steering wheel heater will be decoupled from the seat heating.

Easy entry and exit feature

Using the easy entry and exit feature

WARNING
Risk of accident when pulling away during the adjustment process of the easy entry and exit feature

You could lose control of the vehicle.

- ► Always wait until the adjustment process is complete before driving off.

This also applies to the Digital Vehicle Key.
Vehicles with memory function: you can stop the adjustment process by pressing one of the memory function position switches.

WARNING
Risk of becoming trapped if children activate the easy entry and exit feature

Children could become trapped if they activate the easy entry and exit feature, particularly when unattended.

- ► Never leave children unattended in the vehicle.
- ► When leaving the vehicle, always take the key with you and lock the vehicle.

This also applies to the Digital Vehicle Key.
In order to use the easy entry and exit feature, the automatic seat adjustment function must have been switched on (→ page 244).

WHEN THE EASY ENTRY AND EXIT FEATURE IS ACTIVE, THE STEERING WHEEL AND DRIVER'S SEAT WILL MOVE AS FOLLOWS:

- The steering wheel will move upwards.
- The driver's seat will move forward or backward to a position suitable for getting in or out of the vehicle.

THIS WILL OCCUR IN THE FOLLOWING SITUATIONS:

- You switch off the vehicle when the driver's door is open.
- You open the driver's door when the vehicle is switched off.

The steering wheel will then move upwards only if it is not already as high as it will go. The driver's seat will move forwards or backwards only if it is not already in the ideal position for getting in or out of the vehicle.

THE STEERING WHEEL AND THE DRIVER'S SEAT WILL MOVE BACK TO THE LAST DRIVING POSITION IN THE FOLLOWING CASES:

- You switch the power supply or the vehicle on when the driver's door is closed.

- You close the driver's door when the vehicle is switched on.

THE LAST DRIVE POSITION WILL BE SAVED WHEN:

- You switch off the vehicle.
- **Vehicles with memory function:** you call up the seat settings via the memory function.

Vehicles with memory function: press one of the memory function position switches to stop the adjustment process.

Setting the easy entry and exit feature

Requirements:

- The automatic seat adjustment has been activated (⟶ page 244).

Multimedia system:

Settings » Vehicle » Easy entry and exit feature

▶ Select Steering wheel and seat, Steering wheel only or Off.

ⓘ If you are using a custom user profile, this information will be used for the easy entry and exit feature. This will cause the driver's seat and steering wheel to move into the correct position automatically. Further information about user profiles (⟶ page 568).

Memory function

The memory function

WARNING
Risk of an accident if the memory function is used while driving

If you use the memory function on the driver's side while driving, you could lose control of the vehicle as a result of the adjustments being made.

- Only use the memory function on the driver's side when the vehicle is stationary.

WARNING
Risk of entrapment when adjusting the seat with the memory function

When the memory function adjusts the seat, you and other vehicle occupants – particularly children – could become trapped.

- During the adjusting process of the memory function, ensure that no body parts are in the area of movement of the seat or the steering wheel.
- If someone becomes trapped, press a preset position button or seat adjustment switch immediately.

  The adjustment process is stopped.

WARNING
Danger of entrapment when memory function is activated by children

When children activate the memory function, they can get trapped, especially if they are unsupervised.

- Never leave children unattended in the vehicle.
- When leaving the vehicle, always take the key with you and lock the vehicle.

This also applies to the Digital Vehicle Key.

You can use the memory function when the vehicle is switched off.
Seat adjustments for up to three people can be stored and called up using the memory function.

YOU CAN SAVE THE FOLLOWING SETTINGS FOR THE FRONT SEAT:

- Seat, backrest, head restraint position and contour of the seat backrest in the lumbar region
- Seat heating: distribution of the heated sections of the seat cushion and seat backrest
- Driver's side: steering wheel position and outside mirror positions on the driver's and front passenger sides
- Head-up display

Operating the memory function

WARNING
Risk of an accident if the memory function is used while driving

If you use the memory function on the driver's side while driving, you could lose control of the vehicle as a result of the adjustments being made.

- Only use the memory function on the driver's side when the vehicle is stationary.

WARNING
Danger of entrapment when memory function is activated by children

When children activate the memory function, they can get trapped, especially if they are unsupervised.

- Never leave children unattended in the vehicle.
- When leaving the vehicle, always take the key with you and lock the vehicle.

This also applies to the Digital Vehicle Key.

You can use the memory function when the vehicle is switched off.

STORING

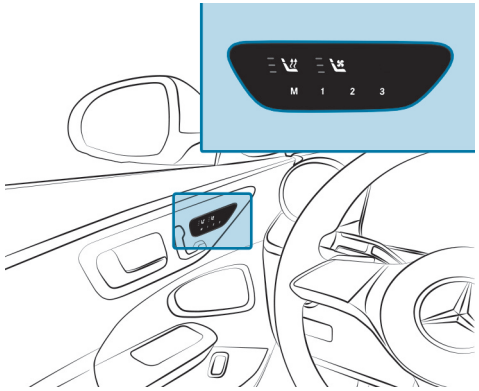

- Adjust the front seat, the steering wheel, the head-up display and the outside mirrors to the desired position.
- Press the memory button M and then release it.
- Press one of the preset position buttons 1, 2 or 3 within three seconds.
  An acoustic signal sounds. The settings are stored.

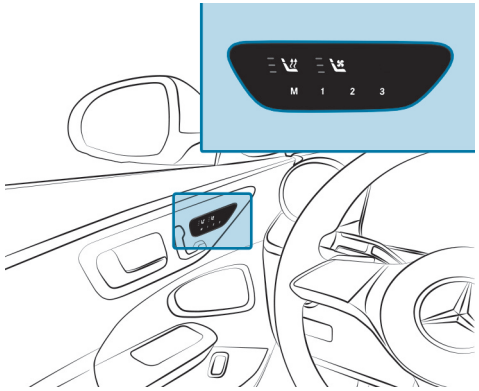

- **To call up:** press the preset position button 1, 2 or 3.
  The seat is moved to the stored position. After releasing the button, the front seat, outside mirrors, head-up display and steering column continue to move into the stored position automatically.

You can watch an animation on this topic via the following link:

Stowage areas

Notes on loading the vehicle

DANGER
Danger to life from toxic exhaust gas when the boot lid is open

Combustion engines emit toxic exhaust gases suchas carbon monoxide. Inhaling these exhaust gases is hazardous to health and leads to poisoning. Exhaust gases can enter the vehicle interior if the boot lid is open when the engine is running, especially if the vehicle is in motion.

- Always switch off the engine before opening the boot lid.
- Never drive with the boot lid open.

Objects in the deployment area of an airbag may prevent the airbag from functioning correctly. Observe the notes on airbags (→ page 161).

WARNING
Risk of injury from unsecured items in the vehicle

If objects, luggage or loads are not secured or not secured sufficiently, they could slip, tip over or be thrown around and thereby hit vehicle occupants.

There is a risk of injury, particularly in the event of sudden braking or a sudden change in direction.

- Always stow objects in such a way that they cannot be thrown around.
- Before the journey, secure objects, luggage or loads against slipping or tipping over.

WARNING
Risk of injury due to objects being stowed incorrectly

If objects in the vehicle interior are stowed incorrectly, they can slide or be thrown around and hit vehicle occupants. In addition, cup holders, open stowage spaces and mobile phone brackets cannot always retain all objects they contain.

There is a risk of injury, particularly in the event of sudden braking or a sudden change in direction.

- Always stow objects in such a way that they cannot be thrown around in such situations.
- Always make sure that objects do not protrude from stowage spaces, luggage nets or stowage nets.
- Close the lockable stowage spaces before starting a journey.
- Always stow and secure heavy, hard, pointed, sharp-edged, fragile or bulky objects in the boot.

WARNING
Risk of accident due to objects in the driver's and front-passenger footwell

Objects in the driver's and front-passenger footwell may impede pedal travel or block a depressed pedal.

This jeopardises the operating- and road safety of the vehicle.

- Stow all objects in the vehicle securely so that they cannot get into the driver's or front-passenger footwell.
- Always ensure that the pedals have sufficient free space.
- Always fit the floor mats securely and as prescribed.
- Do not use loose floor mats and do not place floor mats on top of one another.

Vehicles with automatic front passenger airbag shutoff: Objects trapped under the front passenger seat may interfere with the function of the automatic front passenger airbag shutoff or damage the system. Therefore please observe the notes on the function of automatic front passenger airbag shutoff (⟶ page 147).

NOTE
Damage to the vehicle caused by spilled liquids

If liquids are spilled in the vehicle, parts of the vehicle may be damaged.

- ► Always securely close containers containing liquids that you have brought with you.
- ► Clean the vehicle as soon as possible if liquids are spilled.
- ► If larger quantities of liquids are spilled, have the vehicle checked in a qualified specialist workshop.

WARNING
Risk of burns from the tailpipe and tailpipe trims

The exhaust tailpipe and tailpipe trims can become very hot. If you come into contact with these parts of the vehicle, you could burn yourself.

- ► Always be particularly careful around the tailpipe and the tailpipe trims and supervise children especially closely in this area.
- ► Allow vehicle parts to cool down before touching them.

ⓘ Leather is a natural product. It has natural surface characteristics, such as differences in structure, marks caused by growth and injury or subtle colour differences. These surface characteristics are particular to leather, and are not material defects.

Leather is also subject to a natural ageing process, which changes the surface characteristics.

THE HANDLING CHARACTERISTICS OF YOUR VEHICLE ARE DEPENDENT ON THE DISTRIBUTION OF THE LOAD WITHIN THE VEHICLE. YOU SHOULD BEAR THE FOLLOWING IN MIND WHEN LOADING THE VEHICLE:

- Never allow the payload including occupants to exceed the maximum permissible gross mass or the permissible axle loads for the vehicle.
  These are shown on the vehicle identification plate (⟶ page 860).
- The load must not protrude above the upper edge of the seat backrests.
- Always place the load behind unoccupied seats if possible.
- Secure the load using the tie-down eyes and distribute the tension evenly.

NOTES ON DRIVING WITH ROOF LOAD

- Distribute the roof load and vehicle load evenly, and place heavy objects at the bottom. Also observe the notes on loading the vehicle.
- Drive with care. Avoid sudden starting, braking and steering manoeuvres or fast cornering.
- When carrying a roof load or when the vehicle is fully loaded or occupied, select drive program [E] or [C]. These are configured for good stability (⟶ page 349).

Stowage spaces in the vehicle interior

OVERVIEW OF THE FRONT STORAGE COMPARTMENTS

WARNING
Risk of injury due to objects being stowed incorrectly

If objects in the vehicle interior are stowed incorrectly, they can slide or be thrown around and hit vehicle occupants. In addition, cup holders, open stowage spaces and mobile phone brackets cannot always retain all objects they contain.

There is a risk of injury, particularly in the event of sudden braking or a sudden change in direction.

- Always stow objects in such a way that they cannot be thrown around in such situations.
- Always make sure that objects do not protrude from stowage spaces, luggage nets or stowage nets.
- Close the lockable stowage spaces before starting a journey.
- Always stow and secure heavy, hard, pointed, sharp-edged, fragile or bulky objects in the boot.

Observe the notes on loading the vehicle.

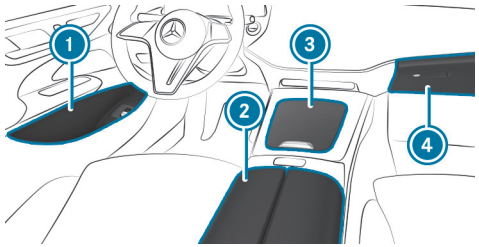

1. Stowage spaces in the doors
2. Stowage and telephone compartment beneath the armrest with USB ports
3. Stowage compartment in the front centre console, with cup holders, USB ports and charging module for wireless charging of mobile phones depending on the vehicle version
4. Glove compartment

The compartment under armrest 2 and the stowage compartment in centre console 3 are connected via a channel so that cables can be routed through them. This allows, for example, USB connection cables for connecting devices to be stowed in both compartments.

The rubber mat in the stowage compartment in front centre console 3 can be removed for cleaning with clean, lukewarm water. Observe the notes on caring for the interior (⟶ page 733).

OPENING AND CLOSING THE STOWAGE COMPARTMENT IN THE FRONT CENTRE CONSOLE

WARNING
Risk of injury due to objects being stowed incorrectly

If objects in the vehicle interior are stowed incorrectly, they can slide or be thrown around and hit vehicle occupants. In addition, cup holders, open stowage spaces and mobile phone brackets cannot always retain all objects they contain.

There is a risk of injury, particularly in the event of sudden braking or a sudden change in direction.

- Always stow objects in such a way that they cannot be thrown around in such situations.
- Always make sure that objects do not protrude from stowage spaces, luggage nets or stowage nets.
- Close the lockable stowage spaces before starting a journey.
- Always stow and secure heavy, hard, pointed, sharp-edged, fragile or bulky objects in the boot.

Observe the notes on loading the vehicle.

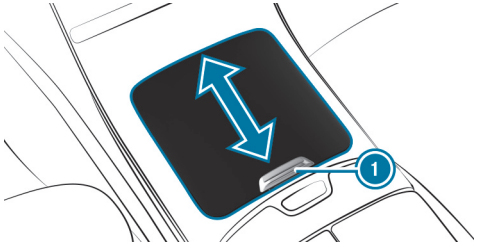

- **To open:** slide the cover of the stowage compartment in the front centre console all the way forwards in the direction of the arrow using handle (1).
- **To close:** briefly push handle (1) of the open cover of the stowage compartment in the front centre console forwards.

  The cover will automatically close the stowage compartment in the front centre console.

LOCKING/UNLOCKING THE GLOVE BOX

WARNING
Risk of injury due to objects being stowed incorrectly

If objects in the vehicle interior are stowed incorrectly, they can slide or be thrown around and hit vehicle occupants. In addition, cup holders, open stowage spaces and mobile phone brackets cannot always retain all objects they contain.

There is a risk of injury, particularly in the event of sudden braking or a sudden change in direction.

- Always stow objects in such a way that they cannot be thrown around in such situations.
- Always make sure that objects do not protrude from stowage spaces, luggage nets or stowage nets.
- Close the lockable stowage spaces before starting a journey.
- Always stow and secure heavy, hard, pointed, sharp-edged, fragile or bulky objects in the boot.

Observe the information on loading the vehicle.

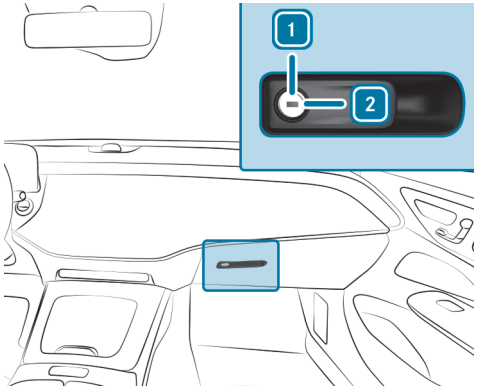

► Turn the emergency key a quarter turn clockwise [2] (to lock) or anti-clockwise [1] (to unlock).

Through-loading feature in the rear bench seat (EASY-PACK Quickfold)

FOLDING THE REAR SEAT BACKRESTS FORWARDS

WARNING
Risk of becoming trapped when adjusting the seats

When you adjust a seat, you may trap yourself or a vehicle occupant.

► When adjusting a seat, make sure that no one has any body parts in the sweep of the seat.

WARNING
Risk of an accident because the seat backrest is not engaged

The seat backrest may fold forwards.

THERE IS A RISK OF THE FOLLOWING, IN PARTICULAR:

- The vehicle occupant may be pressed against the seat belt. The seat belt cannot protect as intended and could cause additional injury.
- A child restraint system is no longer properly supported or properly positioned and may no longer fulfil its function as intended.
- The seat backrest cannot restrain objects or goods in the boot or load compartment.

ALWAYS ENSURE THAT THE SEAT BACKREST IS ENGAGED, ESPECIALLY:

- After the seat has been adjusted.
- After the load compartment enlargement has been folded forwards

Ensure that the red marking of the lock verification indicator is no longer visible. Otherwise, the seat backrest will not be locked.

Always ensure that all vehicle occupants have their seat belts fastened correctly and are sitting properly. Particular attention must be paid to children.

Requirements:

- The rear seat backrest head restraints are fully inserted.
- The rear armrest has been folded up.

FOLDING THE REAR OUTER SEAT BACKRESTS FORWARDS

You can fold the centre and right seat backrests forwards separately.

The left seat backrest can be folded forwards only together with the centre seat backrest.

If you no longer require the folded-down rear seat backrest as a load area, fold the backrest back into place.

- Ensure that the centre seat backrest is in an upright position and locked to the left seat backrest (⟶ page 264).

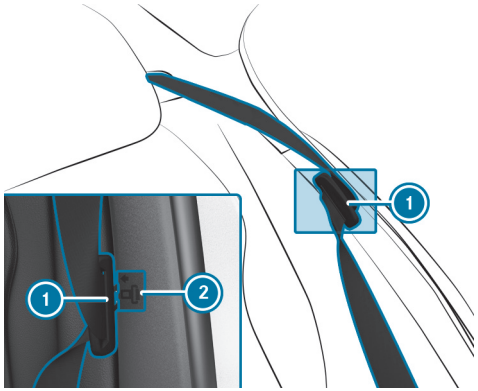

- Press the seat belt tongue of the seat belt (1) into the marked position (2).
- Move the driver's seat or front passenger seat forwards as necessary.

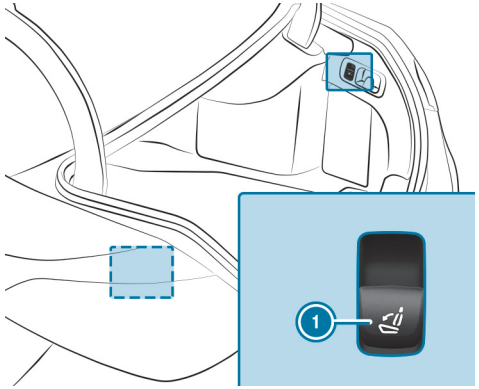

- **To fold the left seat backrest forward:** briefly press the left button (1).

  The left seat backrest will fold forwards together with the centre seat backrest.

  If the left seat backrest is not locked with the centre seat backrest, this will be shown on the central display.

- **To fold the right seat backrest forwards:** briefly press the right button (1).

  The right seat backrest will fold forwards.

ⓘ If you wish to fold only one of the outer seat backrests forwards, fold the right seat backrest forwards.

FOLDING THE CENTRE REAR SEAT BACKREST FORWARDS SEPARATELY

If you no longer require the folded-down seat backrest as a loading area, fold the backrest back into place.

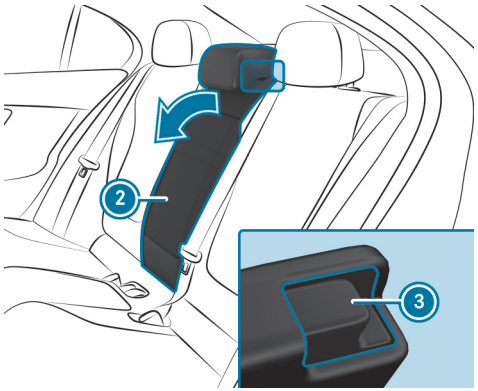

- ► Press the release catch (3).
- ► Fold the seat backrest (2) forwards.

FOLDING BACK THE REAR SEAT BACKREST

WARNING
Risk of becoming trapped when adjusting the seats

When you adjust a seat, you may trap yourself or a vehicle occupant.

- ► When adjusting a seat, make sure that no one has any body parts in the sweep of the seat.

WARNING
Risk of an accident because the seat backrest is not engaged

The seat backrest may fold forwards.

THERE IS A RISK OF THE FOLLOWING, IN PARTICULAR:

- The vehicle occupant may be pressed against the seat belt. The seat belt cannot protect as intended and could cause additional injury.
- A child restraint system is no longer properly supported or properly positioned and may no longer fulfil its function as intended.
- The seat backrest cannot restrain objects or goods in the boot or load compartment.

ALWAYS ENSURE THAT THE SEAT BACKREST IS ENGAGED, ESPECIALLY:

- After the seat has been adjusted.
- After the load compartment enlargement has been folded forwards

Make sure that the red marking of the lock verification indicator is no longer visible. Otherwise, the seat backrest is not locked.

Always ensure that all vehicle occupants have their seat belts fastened correctly and are sitting properly. Particular attention must be paid to children.

NOTE
Damage caused by trapping the seat belt when folding back the seat backrest

The seat belt could become trapped and thus be damaged when the seat backrest is folded back.

- Make sure that the seat belt is not trapped when folding back the seat backrest.

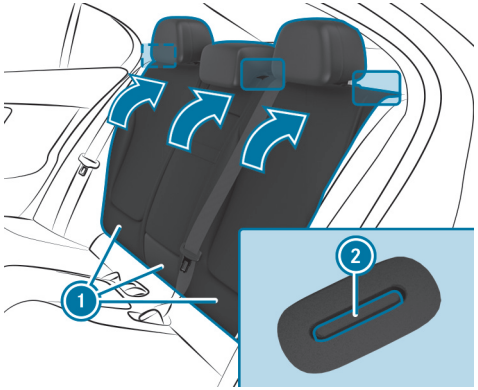

- Move the driver's or front passenger seat forwards, if necessary.
- Swivel seat backrest (1) back until it engages.
  If the seat backrest is not engaged and locked in place, red lock verification indicator (2) will be visible.

LOCKING AND RELEASING THE RELEASE CATCH OF THE CENTRE REAR SEAT BACKREST

WARNING
Risk of becoming trapped when adjusting the seats

When you adjust a seat, you may trap yourself or a vehicle occupant.

- When adjusting a seat, make sure that no one has any body parts in the sweep of the seat.

WARNING
Risk of an accident because the seat backrest is not engaged

The seat backrest may fold forwards.

THERE IS A RISK OF THE FOLLOWING, IN PARTICULAR:

- The vehicle occupant may be pressed against the seat belt. The seat belt cannot protect as intended and could cause additional injury.
- A child restraint system is no longer properly supported or properly positioned and may no longer fulfil its function as intended.
- The seat backrest cannot restrain objects or goods in the boot or load compartment.

ALWAYS ENSURE THAT THE SEAT BACKREST IS ENGAGED, ESPECIALLY:

- After the seat has been adjusted.
- After the load compartment enlargement has been folded forwards

If the seat backrests are not engaged and locked in place, the red lock verification indicators will be visible.

Always ensure that all vehicle occupants have their seat belts fastened correctly and are sitting properly. Particular attention must be paid to children. You can lock the centre seat backrest release catch if you want to secure the boot against unauthorised access. The centre seat backrest can then be folded forwards only together with the left seat backrest.

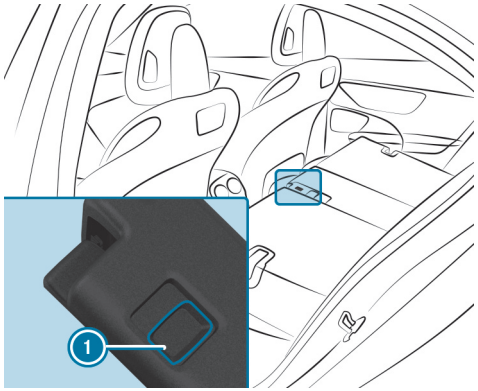

► **To lock or unlock:** slide catch (1) upwards or downwards.

Overview of the tie-down eyes

Observe the notes on loading the vehicle (⟶ page 256).

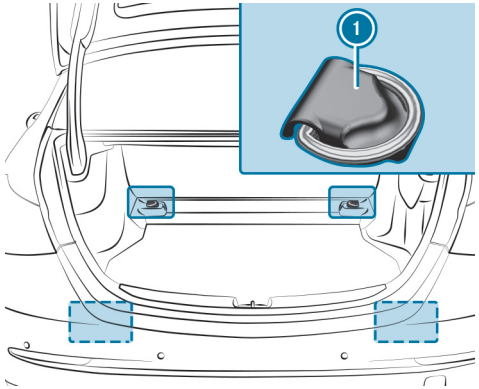

(1) Tie-down eyes

Overview of bag hooks

WARNING
Risk of injury when using bag hooks with heavy objects

The bag hooks cannot restrain heavy objects or items of luggage.

Objects or items of luggage may be flung around and hit vehicle occupants.

- ► Only hang light objects on the bag hooks.
- ► Never hang hard, sharp-edged or fragile objects on the bag hooks.

Observe the notes on loading the vehicle (⟶ page 256).

The bag hook can bear a maximum load of 3 kg. Do not use it to secure a load.

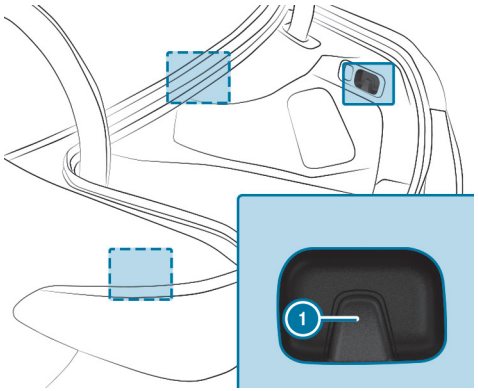

1 Bag hook

Attaching the luggage net

WARNING
Risk of injury due to objects being stowed incorrectly

If objects in the vehicle interior are stowed incorrectly, they can slide or be thrown around and hit vehicle occupants. In addition, cup holders, open stowage spaces and mobile phone brackets cannot always retain all objects they contain.

There is a risk of injury, particularly in the event of sudden braking or a sudden change in direction.

- Always stow objects in such a way that they cannot be thrown around in such situations.
- Always make sure that objects do not protrude from stowage spaces, luggage nets or stowage nets.
- Close the lockable stowage spaces before starting a journey.
- Always stow and secure heavy, hard, pointed, sharp-edged, fragile or bulky objects in the boot.

Observe the information on loading the vehicle.
The luggage net is available for all vehicles except hybrid vehicles.

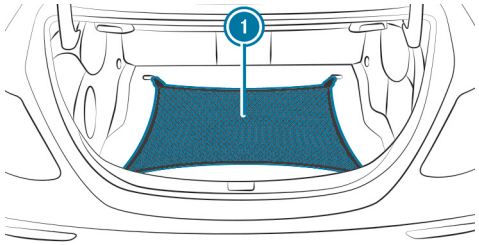

- Fold up the tie-down eyes.
- Hook the luggage net (1) into the front and rear tie-down eyes.

Opening the stowage space under the boot floor

NOTE
Damage to the handle in the boot floor

If the handle in the boot is left protruding, the handle may be damaged.

- Before closing the boot lid, detach the handle and press it down closed again.

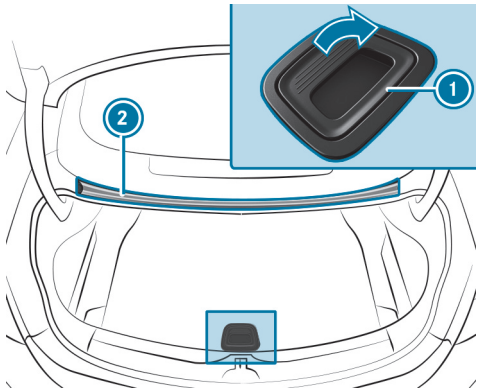

- Pull handle (1) up and hook it to top seal (2) of the load compartment.

Attaching a roof luggage rack

WARNING
Risk of accident due to exceeding the maximum roof load

The vehicle centre of gravity and the usual driving characteristics as well as the steering and braking characteristics alter.

If you exceed the maximum roof load, the driving characteristics, as well as steering and braking, will be greatly impaired.

- Never exceed the maximum roof load and adjust your driving style.

You will find information on the maximum roof load in the "Technical data" section.

NOTE
Vehicle damage due to failure to observe the maximum permissible clearance height

If the vehicle height exceeds the maximum permissible clearance height, the roof and other vehicle parts may be damaged.

- Please observe the indicated maximum clearance height.
- If the vehicle exceeds the permissible clearance height, do not drive in.
- Take the modified vehicle height in the case of roof superstructures or other carrier systems into account.

NOTE
Damage to the panorama sliding sunroof due to non-approved roof luggage racks

The panorama sliding sunroof may be damaged by the roof luggage rack if you attempt to open it when using a roof luggage rack not tested and approved for Mercedes-Benz.

- When a roof luggage rack is fitted, open the panorama sliding sunroof only if this has been tested and approved for Mercedes-Benz.

The panorama sliding sunroof may be raised to allow ventilation of the vehicle interior.

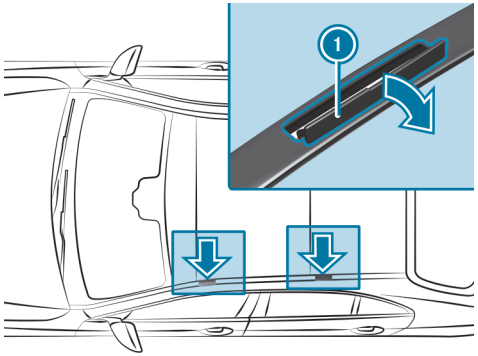

NOTE
Damage to the covers

The covers may be damaged and scratched when being opened.

- Do not use metallic or hard objects.

- Fold covers (1) carefully upwards in the direction of the arrow.
- Secure the roof luggage rack to the fastening points beneath covers (1).
- Comply with the installation instructions of the roof luggage rack manufacturer.
- Secure the load on the roof luggage rack.

Cup holders

Fitting or removing the cup holder in the centre console

WARNING
- Risk of accident or injury when using the cup holder while the vehicle is in motion

The cup holder cannot hold a container secure while the vehicle is in motion.

If you use a cup holder while the vehicle is in motion, the container may be flung around and liquids could be spilled. The vehicle occupants may come into contact with the liquid and if it is hot, they could be scalded. You could be distracted from traffic conditions and you may lose control of the vehicle.

- Only use the cup holder when the vehicle is stationary.
- Only use the cup holder for containers of the right size.
- Always close the container, particularly if the liquid is hot.

WARNING
Risk of injury due to objects being stowed incorrectly

If objects in the vehicle interior are stowed incorrectly, they can slide or be thrown around and hit vehicle occupants. In addition, cup holders, open stowage spaces and mobile phone brackets cannot always retain all objects they contain.

There is a risk of injury, particularly in the event of sudden braking or a sudden change in direction.

- Always stow objects in such a way that they cannot be thrown around in such situations.
- Always make sure that objects do not protrude from stowage spaces, luggage nets or stowage nets.
- Close the lockable stowage spaces before starting a journey.
- Always stow and secure heavy, hard, pointed, sharp-edged, fragile or bulky objects in the boot.

Depending on the vehicle version, a cup holder can be used in the storage compartment in the front centre console.

The cup holder can be removed for cleaning. Observe the information on loading the vehicle (→ page 256).

INSERTING A CUP HOLDER

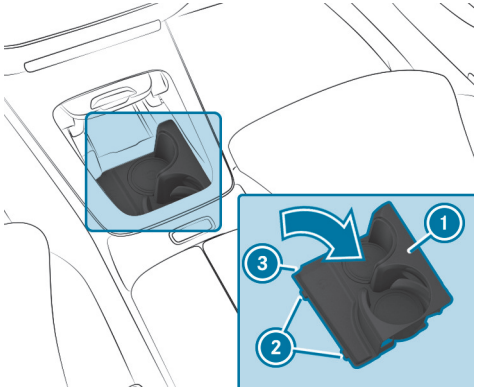

- Starting with the corner (3), insert the cup holder and rotate it into place so that the two lugs (2) are in the recesses in the trim.
- Rotate the cup holder into the compartment and press the housing (1) down until it engages.

REMOVING THE CUP HOLDER

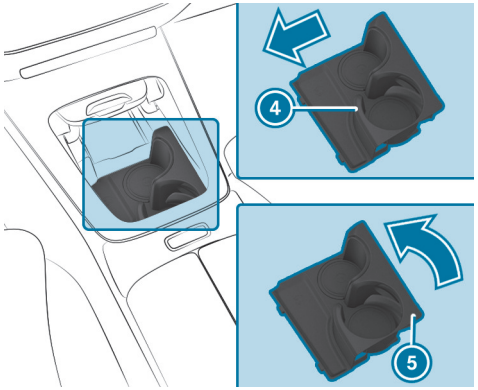

- Push the side wall of the rear beverage compartment (4) to the left until the cup holder releases.
- Using the corner (5), twist out cup holder to the front left.
- Reinsert the cup holder after cleaning.

REMOVING/FITTING THE INSERT MATS

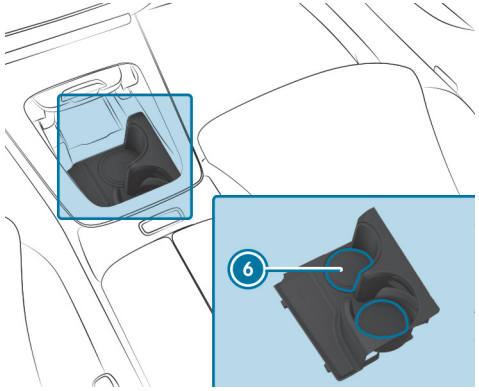

The insert mats (6) in the cup holder beverage compartments can be removed for cleaning.

- **To remove:** use a suitable tool to push the insert mats out of their mounting from the rear of the removed cup holder.
- **To fit:** press the insert mats into the cup holder mountings until they engage.

Using the cup holder

Check whether the beverage container is held firmly by the cup holder. Some beverage containers will not be secured adequately in the cup holder due to their shape or size.

The side wall of the front beverage compartment can be retracted and extended manually.

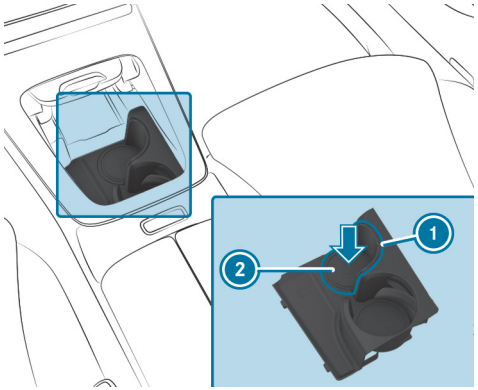

- Gently push a beverage container into the bottom (2) of the beverage compartment.

  The side panel will automatically extend to the left to secure the beverage container.

Alternatively, you can extend the side wall of the beverage compartment by pressing lightly on the grooved surface (1).

RETRACTING THE SIDE WALL

When the front beverage compartment is not in use, the side panel can be retracted manually. The cup holder's holding function will then no longer be available.

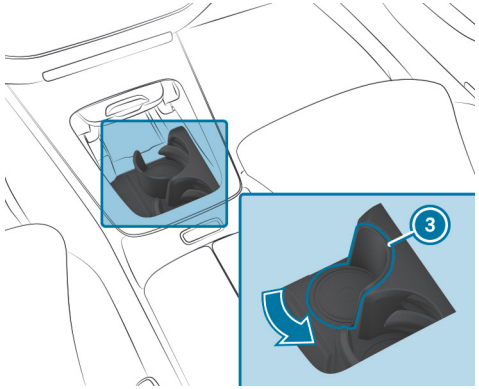

- Push the side panel back in the direction of the arrow until it engages in the correct position (3).

Sockets

Using the 12 V socket in the front passenger footwell

Requirements

- Only connect devices up to a maximum of 180 W (15 A).

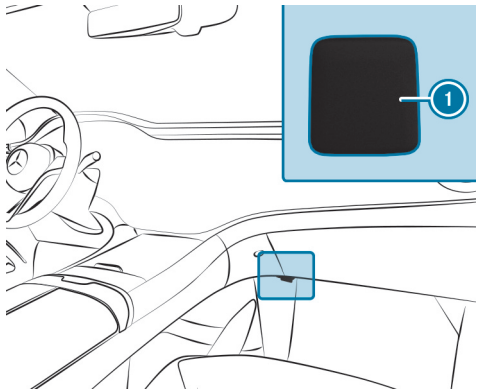

12 V socket in the front passenger footwell

- ▶ Fold up the cap on socket (1).
- ▶ Insert the plug of the device.
- ▶ Make sure that no cables are running through or secured in the airbag deployment area when using the socket. Observe the notes on the airbags (⟶ page 161).

Using USB ports

DEPENDING ON THE VEHICLE EQUIPMENT, THE VEHICLE HAS THE FOLLOWING USB PORTS:

- in the storage compartment in the front centre console
- in the storage compartment under the front armrest
- in the rear centre console

You can charge a USB device, such as a mobile phone, at the USB ports using a suitable charging cable. Depending on the vehicle equipment, the vehicles can be charged with up to 20 V (5 A) when the vehicle is switched on.

Charging a mobile phone wirelessly

WARNING
Risk of injury due to objects being stowed incorrectly

If objects in the vehicle interior are stowed incorrectly, they can slide or be thrown around and hit vehicle occupants. In addition, cup holders, open stowage spaces and mobile phone brackets cannot always retain all objects they contain.

There is a risk of injury, particularly in the event of sudden braking or a sudden change in direction.

- Always stow objects in such a way that they cannot be thrown around in such situations.
- Always make sure that objects do not protrude from stowage spaces, luggage nets or stowage nets.
- Close the lockable stowage spaces before starting a journey.
- Always stow and secure heavy, hard, pointed, sharp-edged, fragile or bulky objects in the boot.

WARNING
Risk of injury due to objects being stowed incorrectly

If objects in the vehicle interior are stowed incorrectly, they may slide or be thrown around and hit vehicle occupants. In addition, cup holders, open stowage spaces and mobile phone receptacles will not always be able to retain all objects that they contain in the event of an accident.

There is a risk of injury, particularly in the event of sudden braking or a sudden change in direction.

- Always stow objects such that they cannot be thrown around in such situations.
- Always make sure that objects do not protrude from stowage spaces, luggage nets or stowage nets.
- Close the lockable stowage spaces before starting a journey.
- Always stow and secure heavy, hard, pointed, sharp-edged, fragile or bulky objects in the boot/load compartment.

Observe the information on loading the vehicle.

WARNING
Risk of fire if objects are placed in the mobile phone tray while charging

There is a risk of fire if you place additional objects in the mobile phone tray while charging. This is particularly the case when metallic objects are involved.

► Do not place any objects, especially metal objects such as coins, in the mobile phone tray while charging.

Observe the information on loading the vehicle.

Requirements:

- The mobile phone is suitable for wireless charging.
  A list of compatible mobile phones can be found at: https://www.mercedes-benz-mobile.com/

NOTE
Damage to objects caused by placing them in the mobile phone stowage compartment

If objects are placed in the mobile phone stowage compartment, these may be damaged by electromagnetic fields.

► Do not place credit cards, storage media, ski passes or other objects sensitive to electromagnetic fields in the mobile phone stowage compartment.

NOTE
Damage to the mobile phone stowage compartment caused by liquids

If liquids enter the mobile phone stowage compartment, the compartment may be damaged.

► Ensure that no liquids enter the mobile phone stowage compartment.

Always observe the notes for persons with electronic medical aids .

- Depending on the vehicle equipment, the mobile phone is connected to the vehicle's exterior aerial via the charging module.
- The charging function and wireless connection of the mobile phone to the vehicle's exterior aerial are only available if the vehicle is switched on.
- Small mobile phones may not be able to be charged in every position of the mobile phone tray.
- Large mobile phones which do not rest flat in the mobile phone tray may not be able to be charged or connected with the vehicle's exterior aerial.
- The mobile phone may heat up during the charging process. This may also depend on the applications (apps) currently open in the background.
- To ensure more efficient charging and connection with the vehicle's exterior aerial, remove the protective cover from the mobile phone. This does not apply to protective covers which are required for wireless charging.

It is possible to wirelessly charge a mobile phone in the front storage compartment of the vehicle's centre console.

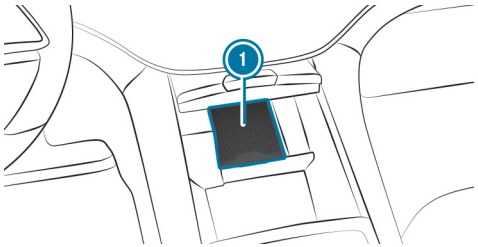

Wireless charging of the mobile phone in the front storage compartment

- Place the mobile phone as close to the centre of mat (1) as possible with the display facing up.

When the charging symbol is shown in the multimedia system, the mobile phone is being charged. In addition, malfunctions during the mobile phone's charging process are shown in the multimedia system display.

ⓘ The mat can be removed for cleaning, e.g. using clean, lukewarm water.

RADIO EQUIPMENT APPROVAL NUMBERS FOR BRAZIL

This device operates in secondary mode, whereby it has no protection against harmful interference, not even from the same type of stations, and must not cause interference with systems operating on a primary basis.

This product is permitted in accordance with the procedures defined in Directive 242/2000 by the Brazilian telecommunications agency ANATEL and meets the applicable technical requirements.

More information is available on the ANATEL website. www.anatel.gov.br

- Further information on the declaration of conformity for vehicle components which receive and/or transmit radio waves.

Fitting and removing floor mats

WARNING
Risk of accident due to objects in the driver's footwell

Objects in the driver's footwell may impede pedal travel or block a depressed pedal.

This will jeopardise the operating and road safety of the vehicle.

- Stow all objects in the vehicle securely so that they cannot get into the driver's footwell.
- Make sure that there is always sufficient clearance for the pedals.
- Always fit the floor mats securely and as prescribed.
- Do not use loose floor mats and do not place floor mats on top of one another.

FITTING FLOOR MATS

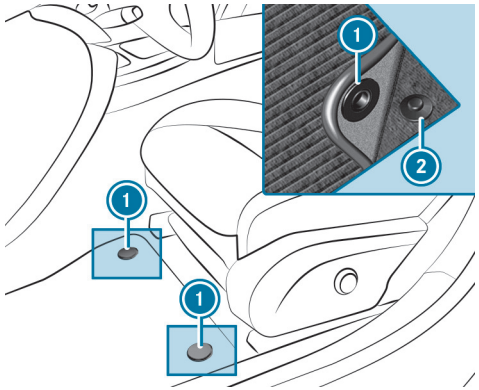

- Slide the corresponding seat backwards and lay the floor mat in the footwell such that it fits.
- Press studs (1) onto holders (2).
- Adjust the corresponding seat.

REMOVING FLOOR MATS

- Slide the corresponding seat backwards and pull the floor mat off holders (2).
- Adjust the corresponding seat.

Fitting and removing a pennant staff

FITTING A PENNANT STAFF

The pennant staff is fitted and removed in identical fashion on both the driver's and front passenger sides.

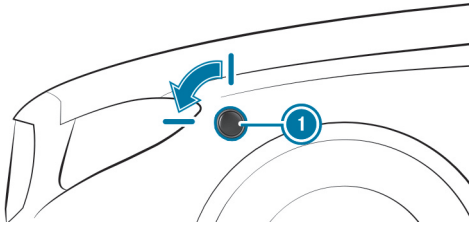

- Press cover (1) and turn it forwards in the direction of travel.
- Remove the cover.

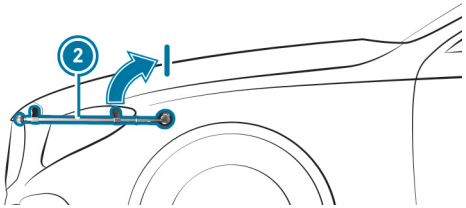

- Position pennant staff (2) horizontally in the opening and press it in.
- Turn pennant staff (2) in the opposite direction to the direction of travel until it is in a vertical position and engages.

REMOVING A PENNANT STAFF

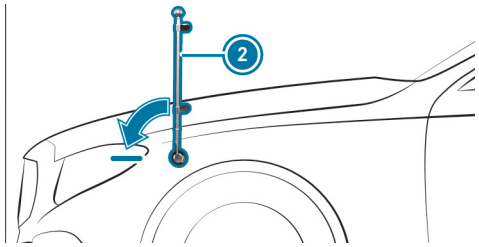

- Press pennant staff (2) into the opening and turn it forwards in the direction of travel until it is in a horizontal position.
- Remove pennant staff (2).

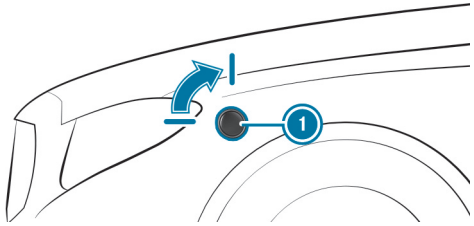

- Fit cover (1) and turn it backwards in the opposite direction to the direction of travel until it engages.

When the pennant staff is not fitted to the vehicle, stow it in a place such as the luggage nets in the boot.

Back to Contents

Light and sight

This interactive PDF works like a website – tap or click a button to jump straight to where you want to go.
You can return here at any time via the navigation bar at the top left.

Exterior lighting
Interior lighting
Windscreen wipers and windscreen washer system
Mirrors

Exterior lighting

Notes on adjusting the lights when you are driving abroad

Vehicles with static LED headlamps: it is not necessary to convert the headlamps. The legal requirements are also met in countries in which traffic drives on the other side of the road.

Vehicles with DIGITAL LIGHT: as a convenience function, the headlamps will automatically adjust when you cross the border into countries in which traffic drives on the other side of the road. If necessary, the headlamps can also be adjusted manually on the Low beam menu (⟶ page 290).

THE AUTOMATIC LIGHT ADJUSTMENT FUNCTION IS AVAILABLE:

- If automatic is selected on the Low beam menu
- If navigation and the navigation position are available

IN THE FOLLOWING CASES, CHECK THE HEADLAMP SETTING AND CHANGE IT MANUALLY IF NECESSARY:

- If the Low beam setting (left/right-side traffic) Manual adjustment only display message is shown.
- If the Check low beam setting (left/right-side traffic) display message is shown.

ONCE THE HEADLAMPS HAVE BEEN CONVERTED:

- Oncoming traffic will not be dazzled.
- The edge of the road will not be illuminated as far or as high.
- The "motorway mode" and "enhanced fog light" functions will not be available.

Information about lighting systems and your responsibility

The various lighting systems of the vehicle are only aids. The driver of the vehicle is responsible for correct vehicle illumination in accordance with the prevailing light and visibility conditions, legal requirements and traffic situation.

Light switch

OPERATING THE LIGHT SWITCH

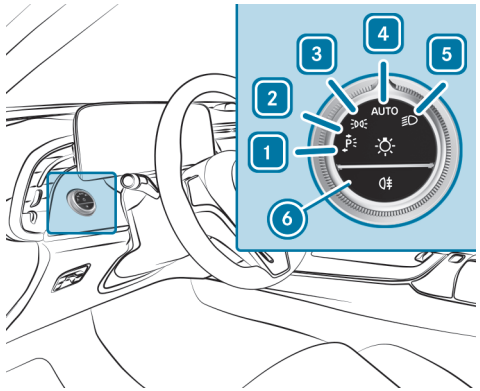

1 ←P≡ Left-hand parking lights
2 P≡→ Right-hand parking lights
3 ≡DOC≡ Standing lights and licence plate lighting
4 AUTO Automatic driving lights (preferred light switch position)
5 ≡D Low beam/high beam
6 0≠ Activates or deactivates the rear fog light.

When low beam is activated, the ≡DOC≡ indicator lamp for the standing lights will be deactivated and replaced by the ≡D low-beam indicator lamp.

► Always park your vehicle safely using sufficient lighting, in accordance with the relevant legal stipulations.

> **NOTE**
> Battery discharging by operating the standing lights
>
> Do not have the standing lights switched on over a period of several hours.

For vehicles that are wider than 2 m or longer than 6 m, single-sided parking lighting is not permitted in some countries. In this case, the standing lights are also switched on in the parking lights position.

If the battery is insufficiently charged, the standing lights or parking lights will be switched off automatically to facilitate the next engine start.

THE EXTERIOR LIGHTING (EXCEPT STANDING AND PARKING LIGHTS) WILL SWITCH OFF AUTOMATICALLY WHEN THE DRIVER'S DOOR IS OPENED.

- Observe the notes on locator lighting (⟶ page 290).

SWITCHING ON ACCIDENT SCENE LIGHTING

► Switch off the vehicle.

► Switch on the hazard warning lights (⟶ page 69).

► Turn the light switch from the AUTO position to the ≡D position.
The low beam will be switched on despite the vehicle being switched off.

THE ACCIDENT SCENE LIGHTING WILL BE SWITCHED OFF IF:

- you switch off the hazard warning lights.
- you turn the light switch back to AUTO.
- the battery is insufficiently charged.

AUTOMATIC DRIVING LIGHTS FUNCTION

When the vehicle is switched on, the standing lights, low beam and daytime running lights will be switched on automatically depending on the light conditions.

WARNING
Risk of accident when the dipped beam is switched off in poor visibility

When the light switch is set to AUTO, the dipped beam may not be switched on automatically if there is fog, snow or other causes of poor visibility such as spray.

- In such cases, turn the light switch to .

The automatic driving lights are only an aid. You are responsible for the vehicle lighting.

SWITCHING THE REAR FOG LIGHT ON/OFF

Requirements

- The light switch is in the or AUTO position.

- Press button .

Please observe the country-specific laws on the use of rear fog lamps.

Operating the combination switch for the light

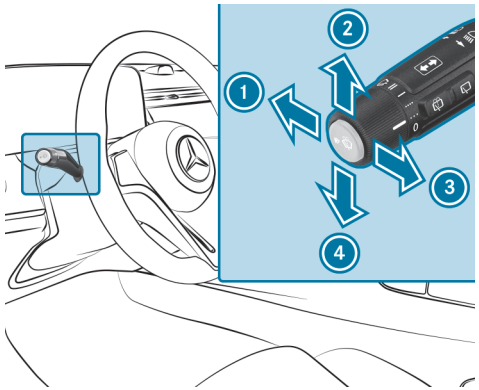

1. Main beam
2. Turn signal light, right
3. Headlamp flashing
4. Turn signal light, left

- Use the combination switch to select the desired function.

SWITCHING ON THE MAIN BEAM

- Turn the light switch to the or AUTO position.

- Push the combination switch in the direction indicated by the arrow 1.

  When the main beam is activated, the indicator lamp for the low beam will be deactivated and replaced by the indicator lamp for the main beam .

SWITCHING OFF THE MAIN BEAM

- Push the combination switch in the direction indicated by the arrow 1 or pull in the direction indicated by the arrow 3.

HEADLAMP FLASHING

- Pull the combination switch in the direction indicated by the arrow 3.

TURN SIGNAL LIGHT

- **To indicate briefly:** push the combination switch briefly to the pressure point in the direction of arrow (2) or (4).

  The corresponding turn signal light flashes three times.

- **To indicate for a duration:** push the combination switch beyond the pressure point in the direction of arrow (2) or (4).

  VEHICLES WITH ACTIVE LANE CHANGE ASSIST:

  - An indication activated by the driver can be extended for the duration of the lane change.
  - If the driver indicated directly beforehand but a lane change was not immediately possible, the turn signal indicator may activate automatically.

Activating/deactivating the hazard warning lights

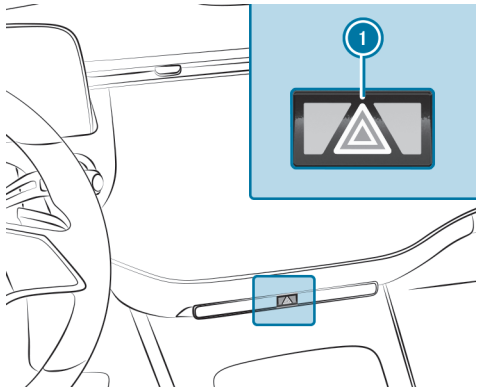

- Press button (1).

IN THE FOLLOWING SITUATIONS, THE HAZARD WARNING LIGHTS WILL SWITCH ON AUTOMATICALLY:

- An airbag was deployed.
- An emergency stop has been initiated (⟶ page 441)
- The vehicle brakes are applied heavily from a speed of more than 70 km/h to a standstill.

When you pull away again, the hazard warning light system will switch off automatically at approximately 10 km/h. You can also switch off the hazard warning light system using the warning lamp button.

DIGITAL LIGHT adaptive functions

FUNCTION OF DYNAMIC LOW BEAM

You can watch an animation on this topic via the following link:

With this system, the headlamps adapt to the driving and weather situation. It also provides extended functions for improved illumination of the road.

THE SYSTEM COMPRISES THE FOLLOWING FUNCTIONS:

- Active Headlamps (⟶ page 283)
- Cornering Light (⟶ page 283)
- Motorway mode (⟶ page 283)
- Enhanced fog light function (⟶ page 284)
- Bad weather light (⟶ page 284)
- City lighting (⟶ page 284)
- Topographical compensation (⟶ page 284)

The system will be active only when it is dark.

ACTIVE HEADLAMPS FUNCTION

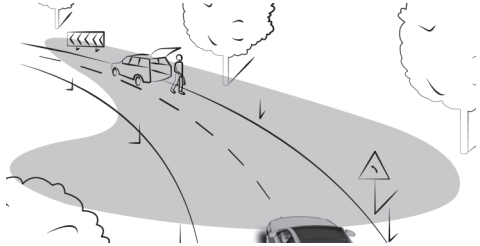

- The headlamps will follow your steering movements.
- Relevant areas will be better illuminated during a journey.

The functions will be active when low beam is switched on.

Depending on the vehicle's equipment, the course of the lane in which you are driving will also be evaluated and the active headlamps function will adjust the light in advance.

CORNERING LIGHT FUNCTION

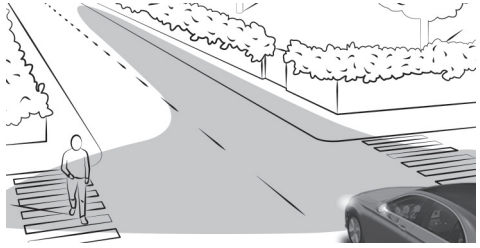

The cornering light improves the illumination of the carriageway over a wide angle in the turning direction, enabling better visibility on tight bends, for example. The cornering light will be activated only when low beam is switched on.

THE FUNCTION WILL BE ACTIVE IN THE FOLLOWING CASES:

- At speeds below 40 km/h when the turn signal light is switched on or the steering wheel is turned
- At speeds between 40 km/h and 70 km/h and when the steering wheel is turned

Roundabout and junction function: the cornering light will be activated on both sides based on an evaluation of the vehicle's current navigation position. It will remain active until after the vehicle has left the roundabout or junction.

MOTORWAY MODE FUNCTION

Motorway mode increases the range and brightness of the cone of light, enabling better visibility.



THE FUNCTION WILL BE ACTIVE IF A MOTORWAY JOURNEY IS DETECTED BY MEANS OF:

- the vehicle's speed
- the multifunction camera
- the navigation system

THE FUNCTION WILL NOT BE ACTIVE IN THE FOLLOWING CASES:

- at speeds below 80 km/h

ENHANCED FOG LIGHT FUNCTION
The enhanced fog light function reduces self-dazzling and improves the illumination of the edge of the carriageway.

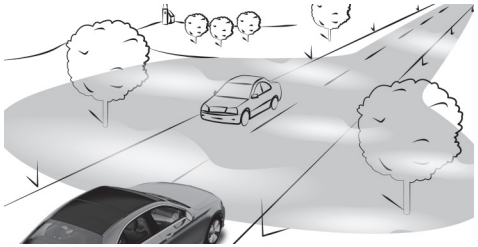

THE FUNCTION IS AUTOMATICALLY ACTIVATED UNDER THE FOLLOWING CONDITIONS:

- At speeds below 70 km/h and when the rear fog light is switched on.

THE FUNCTION IS AUTOMATICALLY DEACTIVATED UNDER THE FOLLOWING CONDITIONS:

- When speeds greater than 100 km/h are reached.
- When the rear fog light is switched off.

FUNCTION OF THE BAD WEATHER LIGHT
The bad weather light reduces reflections in rainy conditions by dimming individual areas of the headlamps. There will be less glare for the driver and other road users as a result.

THE CITY LIGHTING FUNCTION
City lighting improves the illumination of roadsides in urban areas using a broad distribution of light.

THE FUNCTION WILL BE ACTIVE IN THE FOLLOWING CASES:

- At low speeds
- In illuminated parts of urban areas

FUNCTION OF THE TOPOGRAPHICAL COMPENSATION
Based on available map data, the lighting system responds pre-emptively to different road heights. This means that the headlamp range will remain virtually constant when you are driving uphill or downhill.

ⓘ Only vehicles with a multimedia system with navigation have this function.

ASSISTANCE FUNCTIONS OF DIGITAL LIGHT
DIGITAL LIGHT visually expands on the driver assistance systems by projecting the assistant displays in front of the vehicle while it is in motion. DIGITAL LIGHT can therefore help the driver in critical situations.

ⓘ The availability of the functions is country-dependent.

ⓘ The assistance functions of the DIGITAL LIGHT can be a digital extra (⟶ page 114).

The system will remain active when Highbeam Assist is switched on.

ⓘ The assistance functions of DIGITAL LIGHT will be deactivated in heavy rain.

SPOTLIGHT
The spotlight function runs in the background and will flash the headlamps in four short bursts at persons detected within the lane markings.

THE FUNCTION WILL BE ACTIVE IN THE FOLLOWING CIRCUMSTANCES:

- You are driving in an unlit area.
- The system detects a lane marking.

NOTES

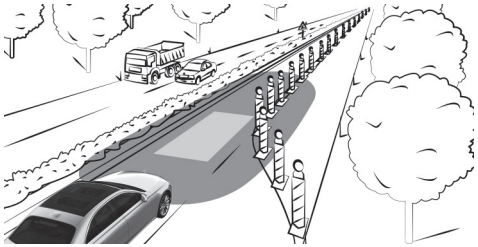

IF TRAFFIC SIGN ASSIST DETECTS A ROADWORKS ZONE, THE SYSTEM WILL PROVIDE SUPPORT AS FOLLOWS:

- When you drive through a roadworks zone, guide lines that roughly match the width of the vehicle will be projected onto the road.

ⓘ The guide lines will be switched off temporarily on tight bends.

ⓘ The widths of the guide lines will not be adjusted in trailer operation.

Observe the system limitations of Traffic Sign Assist (⟶ page 454).

WRONG-WAY WARNING

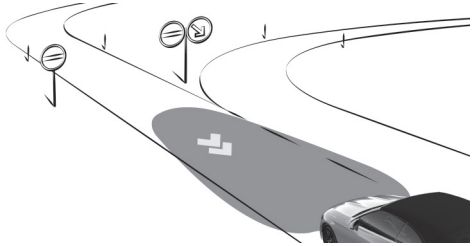

IF TRAFFIC SIGN ASSIST DETECTS A CORRESPONDING SITUATION, A DOUBLE ARROW WILL BE PROJECTED ONTO THE ROAD IN THE FOLLOWING CASES AT SPEEDS OF AT LAT LEAST 30 KM/H:

- You are driving in the opposite direction to the permissible direction of travel (e.g. on a motorway slip road).

Observe the system limitations of Traffic Sign Assist (⟶ page 454).

LANE-KEEPING WARNING

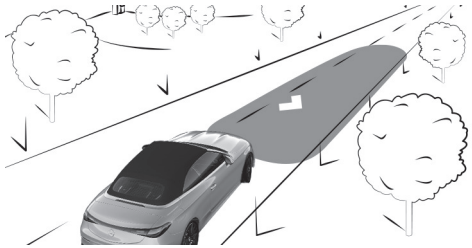

AT SPEEDS OF AT LEAST 30 KM/H, A DIRECTION ARROW THAT INDICATES A LANE CORRECTION AND ITS DIRECTION WILL BE PROJECTED ONTO THE ROAD IN THE FOLLOWING CASES:

- You leave the lane unintentionally.

Observe the system limitations of Active Lane Keeping Assist (⟶ page 463).

ACTIVATING/DEACTIVATING DYNAMIC LOW BEAM

Requirements:

- The vehicle is switched on.

Multimedia system:

Settings » Lights » DIGITAL LIGHT

► Activate or deactivate Dynamic low beam.

ACTIVATING/DEACTIVATING ENHANCED ASSISTANCE FUNCTIONS

ⓘ Availability of the functions is country-dependent.

ⓘ This function is a Digital Extra (⟶ page 114).

► Select Supporting projections.

► Activate or deactivate the desired projections.

► Activate or deactivate Welcome/farewell projection.

If the locator lighting or the exterior switch-off delay time is activated, a high-resolution greeting or farewell composition will be played back for a short period of time when the vehicle is opened or switched off. You can choose between the Digital Rain and Star Wave compositions.

ⓘ More information on locator lighting (⟶ page 290).
More information on the exterior switch-off delay time (⟶ page 290).

Adaptive Highbeam Assist

ADAPTIVE HIGHBEAM ASSIST FUNCTION

⚠ **WARNING**
Risk of accident despite Adaptive Highbeam Assist

ADAPTIVE HIGHBEAM ASSIST DOES NOT REACT TO:

- road users without lights, e.g. pedestrians
- road users with poor lighting, e.g. cyclists
- road users whose lighting is obstructed, e.g. by a barrier

On very rare occasions, Adaptive Highbeam Assist may fail to recognise other road users with their own lighting, or may recognise them too late.

In these, or in similar situations, the automatic high beam will not be deactivated or will be activated despite the presence of other road users.

► Always observe the road and traffic conditions carefully and switch off the high beam in good time.

Adaptive Highbeam Assist cannot take into account road, weather or traffic conditions.

DETECTION MAY BE RESTRICTED IN THE FOLLOWING CASES:

- In poor visibility (e.g. fog, heavy rain or snow)
- If there is dirt on the sensors or the sensors are obscured

Adaptive Highbeam Assist serves solely as an aid. The responsibility for correctly adapting the vehicle's lighting to the prevailing light, visibility and traffic conditions lies solely with the driver.

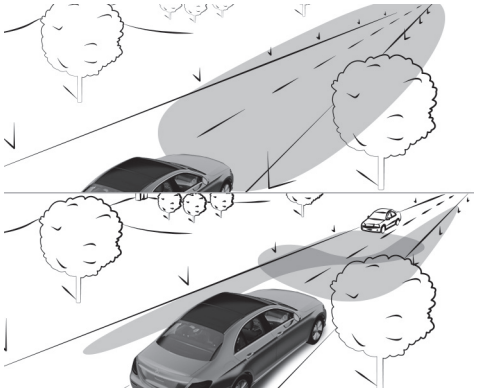

ADAPTIVE HIGHBEAM ASSIST AUTOMATICALLY SWITCHES BETWEEN THE FOLLOWING TYPES OF LIGHT:

- Low beam
- Main beam

AT SPEEDS ABOVE 30 KM/H:

- If no other road users are detected, the high beam will switch on automatically.

THE HIGH BEAM WILL SWITCH OFF AUTOMATICALLY IN THE FOLLOWING CASES:

- At speeds below 25 km/h
- If other road users are detected
- If street lighting is sufficient

The system's optical sensor is located behind the windscreen near the overhead control panel.

SWITCHING ADAPTIVE HIGHBEAM ASSIST ON/OFF

WARNING
Risk of accident despite Adaptive Highbeam Assist

ADAPTIVE HIGHBEAM ASSIST DOES NOT REACT TO:

- road users without lights, e.g. pedestrians
- road users with poor lighting, e.g. cyclists
- road users whose lighting is obstructed, e.g. by a barrier

On very rare occasions, Adaptive Highbeam Assist may fail to recognise other road users with their own lighting, or may recognise them too late.

In these, or in similar situations, the automatic high beam will not be deactivated or will be activated despite the presence of other road users.

► Always observe the road and traffic conditions carefully and switch off the high beam in good time.

SWITCHING ON

► Turn the light switch to the AUTO position.

► Switch on high beam using the combination switch.
If Adaptive Highbeam Assist is activated, the indicator lamp will light up on the driver's display.

SWITCHING OFF

► Switch off high beam using the combination switch.

Adaptive Highbeam Assist Plus

ADAPTIVE HIGHBEAM ASSIST PLUS FUNCTION

⚠ **WARNING**
Risk of accident despite Adaptive Highbeam Assist Plus

ADAPTIVE HIGHBEAM ASSIST PLUS DOES NOT REACT TO:

- road users without lights, e.g. pedestrians
- road users with poor lighting, e.g. cyclists
- road users whose lighting is obstructed, e.g. by a barrier

On very rare occasions, Adaptive Highbeam Assist Plus may fail to recognise other road users with their own lighting, or may recognise them too late.

In these, or in similar situations, the automatic high beam will not be deactivated or will be activated despite the presence of other road users.

► Always observe the road and traffic conditions carefully and switch off the high beam in good time.

Adaptive Highbeam Assist Plus cannot take into account road, weather or traffic conditions.

DETECTION MAY BE RESTRICTED IN THE FOLLOWING CASES:

- In poor visibility (e.g. fog, heavy rain or snow)
- If there is dirt on the sensors or the sensors are obscured

Adaptive Highbeam Assist Plus serves solely as an aid. The responsibility for correctly adapting the vehicle's lighting to the prevailing light, visibility and traffic conditions lies solely with the driver.

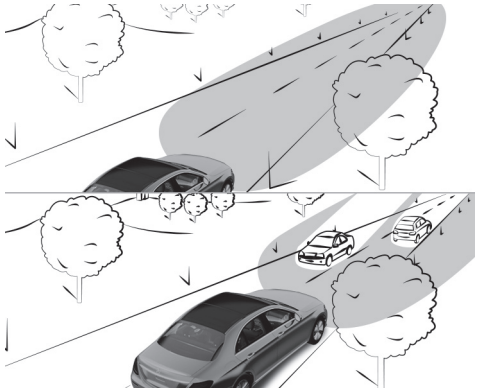

ADAPTIVE HIGHBEAM ASSIST PLUS SWITCHES AUTOMATICALLY BETWEEN THE FOLLOWING LIGHT TYPES:

- Low beam
- Partial high beam
- High beam
- ULTRA RANGE Highbeam

ULTRA RANGE Highbeam increases brightness of the light cone almost to the legally permitted maximum.

Partial high beam excludes other road users from the high beam area. This prevents a dazzling effect for other road users, while still providing full high-beam illumination for the driver alongside the excluded vehicles. Highly reflective signs are also illuminated with reduced brightness.

AT SPEEDS BELOW 25 KM/H OR WHEN THERE IS ADEQUATE STREET LIGHTING:

- Partial high beam and high beam will be switched off automatically.

AT SPEEDS ABOVE 30 KM/H:

- If no other road users are detected, the high beam will switch on automatically.
- If other road users are detected, the partial high beam will switch on automatically.

AT SPEEDS BELOW 40 KM/H:

- ULTRA RANGE Highbeam will switch off automatically.

AT SPEEDS ABOVE 50 KM/H:

- If no other road users are detected, the roadway is straight and it is not raining heavily, ULTRA RANGE Highbeam will switch on automatically.
- If other road users are detected, ULTRA RANGE Highbeam will automatically switch off and the partial high beam will switch on.
- If highly reflective signs are detected, ULTRA RANGE Highbeam will switch off automatically.

ⓘ The system's optical sensor is located behind the windscreen near the overhead control panel.

SWITCHING ADAPTIVE HIGHBEAM ASSIST PLUS ON/OFF

⚠ **WARNING**
Risk of accident despite Adaptive Highbeam Assist Plus

ADAPTIVE HIGHBEAM ASSIST PLUS DOES NOT REACT TO:

- road users without lights, e.g. pedestrians
- road users with poor lighting, e.g. cyclists
- road users whose lighting is obstructed, e.g. by a barrier

On very rare occasions, Adaptive Highbeam Assist Plus may fail to recognise other road users with their own lighting, or may recognise them too late.

In these, or in similar situations, the automatic high beam will not be deactivated or will be activated despite the presence of other road users.

► Always observe the road and traffic conditions carefully and switch off the high beam in good time.

SWITCHING ON

► Turn the light switch to the AUTO position.

► Switch on high beam using the combination switch.

If Adaptive Highbeam Assist Plus is activated, the indicator lamp will light up on the driver's display. When partial high beam or high beam is active, the corresponding blue indicator lamp will also light up.

SWITCHING OFF

► Switch off high beam using the combination switch.

Setting the low beam

Multimedia system:

Settings » Lights » DIGITAL LIGHT » Low beam

- Select Right-side traffic, Left-side traffic or Automatic.

Setting the exterior lighting switch-off delay time

Multimedia system:

Settings » Lights » Interior/exterior lighting » Exterior lighting switch-off delay

- Set a switch-off delay time.

  When the vehicle's engine is switched off, the exterior lighting will be activated for the set time.

Activating/deactivating locator lighting

Multimedia system:

Settings » Lights » Interior/exterior lighting

- Activate or deactivate Locator lighting.

The exterior lighting will light up for 40 seconds after the vehicle is unlocked or the driver's door is opened when the vehicle is not locked. When you start the vehicle, the locator lighting will be deactivated and the automatic driving lights activated.

Interior lighting

Adjusting the interior lighting

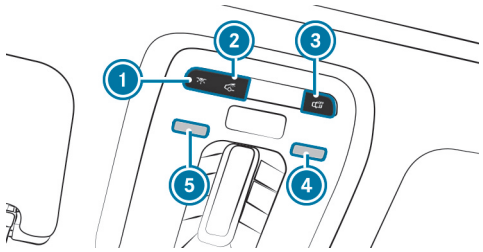

1 Switches the front interior lighting on/off.
2 Switches the rear interior lighting on/off.
3 Switches automatic interior lighting control on/off.
4 and 5 Switch the reading lamps on/off.

- Depending on the respective vehicle version, it is possible to dim the front and rear interior lighting, as well as the reading lights, by holding the respective button pressed.
- Press again to switch off the respective lighting.

OPERATING UNIT INSIDE THE GRAB HANDLE (REAR)

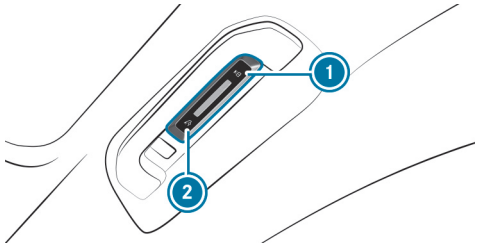

1 Reading lamp on the respective side of the vehicle
2 Rear interior lighting

- **To switch the reading lamps on:** press the button 1.

  The reading lamp, the interior lighting in the grab handle and the dome lamp on the respective side of the vehicle will light up.

- **To switch the reading lamps off:** press the button 1 once or twice.

  When you press it once, the interior lighting in the grab handle and the dome lamp on the respective side of the vehicle will go out.

  When you press it twice, the reading lamp on the respective side of the vehicle will go out.

- **To switch the rear interior lighting on/off:** press the button 2.

  The reading lamps, the interior lighting in the grab handle and the dome lamps on both sides of the vehicle will light up or go out.

Adjusting the ambient lighting

Multimedia system:

Comfort » Ambient light

SETTING THE COLOUR

- Select Colour.
- Select Monochrome or Multi-colour.
- Set the desired colour or colour scheme.

ADJUSTING THE BRIGHTNESS

- Select Brightness.
- Adjust the brightness.

Depending on the ambient light conditions, the ambient lighting will automatically switch between day and night mode.

ACTIVATING THE BRIGHTNESS FOR ZONES

- Select Brightness.
- Switch off Link zones .

  The Direct, Indirect and Accents zones can be set separately.

The Light strip zone can also be set in vehicles with active ambient lighting.

ACTIVATING EFFECTS

WARNING
Risk of accident if effects of ambient lighting and active ambient lighting not enabled

The Warning Support features will be fully activated only if the appropriate driving or driving safety systems are enabled on the driver assistance menu.

- Make sure that the appropriate driving or driving safety systems are enabled.

Observe the notes on driving systems and the notes on your responsibility to identify potentially hazardous situations in good time (⟶ page 412).

- Select Effects.
- Activate the desired effect.

Different effects will be available depending on the respective vehicle equipment.

OPERATING FEEDBACK EFFECTS

- Climate: If changes are made to the temperature setting in the vehicle, the colour of the ambient light will change briefly.
- Voice assistant: In vehicles with active ambient lighting, the voice assistant will be visually animated.

- Greeting: When you get into the vehicle, a special colour animation will play.

WARNING ASSISTANCE EFFECTS

- Warning when exiting: If an object is detected in the blind spot while you are getting out of the vehicle, the ambient lighting on the affected door will flash red.

  Further information on the exit warning (⟶ page 459).
- Active Lane Keeping Assist: If there is a warning from Active Lane Keeping Assist, the active ambient lighting will flash red.
- Active Brake Assist: If there is an Active Brake Assist warning, the active ambient lighting in the centre of the cockpit will flash bright red.

  Further information on Active Brake Assist (⟶ page 448).
- Active Blind Spot Assist: In vehicles with active ambient lighting, the ambient lighting on the affected side will flash red if there is a warning from Active Blind Spot Assist.

  Further information on Active Blind Spot Assist (⟶ page 459).
- Parking Assist PARKTRONIC: The information from the parking sensors during parking manoeuvres will be displayed in colour.

  Further information on Parking Assist PARKTRONIC: (⟶ page 478)

MULTI-COLOUR ANIMATION

- The set colour combination will change at predefined intervals.

SOUND VISUALISATION

- Depending on the selected light colour, the sound visualisation function visually accentuates the sound content played.

ⓘ In vehicles with active ambient lighting, an animation will be played.

ⓘ The desired operating feedback effects and warning assistance effects can be activated or deactivated in the menu that is called up via the ⚙ symbol. Depending on the respective equipment, different operating feedback effects and warning assistance effects are available.

ⓘ If the brightness is set to a low level, warning animations will be displayed at a higher standard brightness.

You can watch an animation on this topic via the following link:

Switching the interior lighting switch-off delay time on/off

Multimedia system:

⌂ ▸▸ Settings ▸▸ Lights ▸▸ Interior/exterior lighting ▸▸ Interior lighting switch-off delay

▶ Activate or deactivate Interior lighting switch-off delay.

If this function is active, the interior lighting will be switched on for a short time after the end of the journey.

Windscreen wipers and windscreen washer system

Switching the windscreen wipers on/off

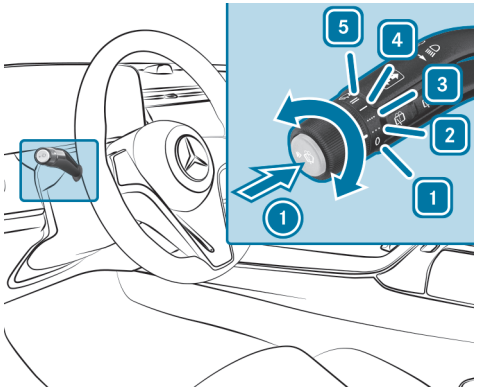

1 0 Windscreen wipers off
2 ••• Automatic wiping, normal
3 •••• Automatic wiping, frequent
4 — Continuous wiping, slow
5 = Continuous wiping, fast

- Turn the combination switch to the corresponding position 1 - 5.
- **Single wipe:** press button (1) as far as the point of resistance.
- **Wiping with washer fluid:** press button (1) beyond the point of resistance.

ⓘ Observe the notes on washing the vehicle in a car wash (→ page 44).

Replacing the windscreen wiper blades

WARNING
Risk of becoming trapped if the windscreen wipers are switched on while wiper blades are being replaced

If the windscreen wipers begin to move while you are changing the wiper blades, you can be trapped by the wiper arm.

- Always switch off the windscreen wipers and vehicle before changing the wiper blades.

MOVING THE WIPER ARMS INTO THE REPLACEMENT POSITION

- Switch the vehicle on and then off again immediately.
- Within around 15 seconds, press and hold the button on the combination switch for approximately three seconds (→ page 294).

  The wiper arms move into the replacement position.

REMOVING THE WIPER BLADES

- Fold the wiper arms away from the windscreen.

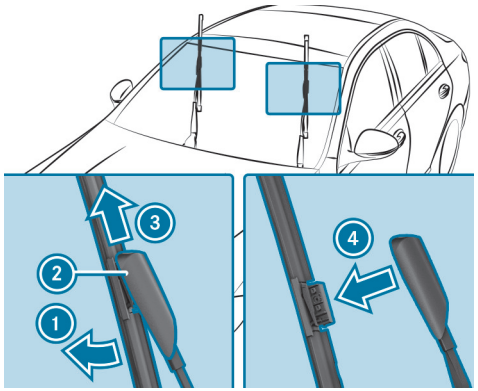

- Hold the wiper arm with one hand. With the other hand, turn the wiper blade away from the wiper arm in the direction indicated by the arrow 1 as far as it will go.
- Slide the catch 2 in the direction indicated by the arrow 3 until it engages in the removal position.
- Remove the wiper blade from the wiper arm in the direction indicated by the arrow 4.

FITTING THE WIPER BLADES

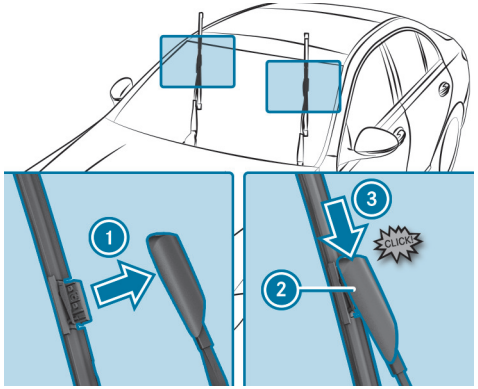

- Insert the new wiper blade into the wiper arm in the direction indicated by the arrow 1.
- Slide the catch 2 in the direction indicated by the arrow 3 until it engages in the locking position.
- Ensure that the wiper blade is seated correctly.
- Fold the wiper arms back onto the windscreen.
- Switch on the vehicle.
- Press the button on the combination switch.
  The wiper arms will return to their original positions.
- Switch off the vehicle.

SERVICE INDICATOR

There is a service indicator at the tip of the newly mounted wiper blades.

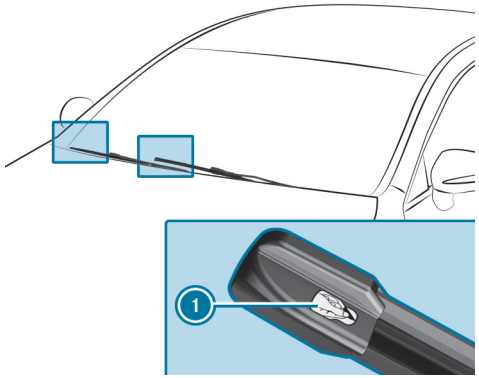

- Remove the protective film 1 from the service indicator.

When the colour of the service indicator changes from black to yellow, the wiper blades should be replaced.

Mirrors

Operating the outside mirrors

WARNING
Risk of accident due to adjusting the vehicle settings while the vehicle is in motion

YOU COULD LOSE CONTROL OF THE VEHICLE IN THE FOLLOWING SITUATIONS IN PARTICULAR:

- if you adjust the driver's seat, the head restraint, the steering wheel or the mirror while the vehicle is in motion
- if you fasten your seat belt while the vehicle is in motion

► Before starting the vehicle: in particular, adjust the driver's seat, head restraint, steering wheel and mirror, and fasten your seat belt.

WARNING
Risk of accident due to misjudgement of distance when using the outside mirror

The outside mirrors reflect objects on a smaller scale. The objects in view are in fact closer than they appear.

► Therefore, always look over your shoulder in order to ensure that you are aware of the actual distance between you and the road users driving behind you.

ADJUSTS THE OUTSIDE MIRRORS

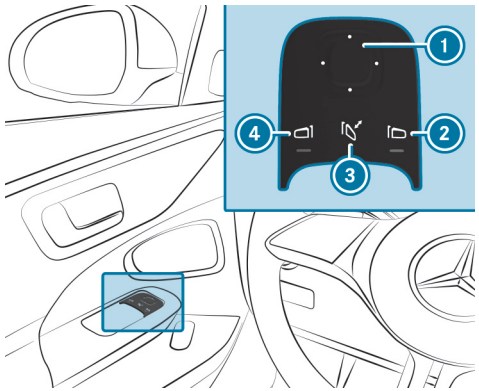

► Use button (2) or (4) to select the desired mirror.

ⓘ In vehicles with MBUX Interior Assistant and driver camera, the required outside mirror can also be preselected automatically via a natural head movement to the left or right(⟶ page 583).

► Use button (1) to adjust the position of the selected mirror.

FOLDING THE OUTSIDE MIRRORS IN/OUT (VEHICLES WITH ELECTRICALLY FOLDING OUTSIDE MIRRORS)

► Briefly press button (3).

ⓘ If the battery has been disconnected or has discharged, the outside mirrors must be moved briefly using button (3). Only then will the automatic mirror folding function work properly.

ENGAGING THE OUTSIDE MIRRORS

If an outside mirror has been forcibly disengaged, proceed as follows.

► Vehicles without electrically folding outside mirrors: manually move the outside mirror into the correct position until it audibly engages.

► Vehicles with electrically folding outside mirrors: press and hold button (3).

You will hear a click and the mirror will audibly engage. The outside mirror will now be set to the correct position.

Function of the automatic anti-dazzle mirrors

⚠ **WARNING**
Risk of acid burns and poisoning due to the anti-dazzle mirror electrolyte

Electrolyte may escape if the glass in an automatic anti-dazzle mirror breaks.

The electrolyte is hazardous to health and causes irritation. It must not come into contact with your skin, eyes, respiratory organs or clothing or be swallowed.

► If you come into contact with electrolyte, observe the following:

- Immediately rinse the electrolyte from your skin with water and seek medical attention.
- If electrolyte comes into contact with your eyes, immediately rinse them thoroughly with clean water and seek medical attention.
- If the electrolyte is swallowed, immediately rinse your mouth out thoroughly. Do not induce vomiting. Seek medical attention immediately.
- Immediately change out of clothing which has been contaminated with electrolyte.
- If an allergic reaction occurs, seek medical attention immediately.

Depending on the vehicle equipment, the inside mirror and the outside mirror on the driver's side will automatically go into anti-dazzle mode if light from a headlamp hits the sensor on the inside mirror.

SYSTEM LIMITS

THE SYSTEM WILL NOT GO INTO ANTI-DAZZLE MODE IF:

- The vehicle is switched off.
- Reverse gear is engaged.
- The interior lighting is switched on.

Front-passenger outside mirror parking position function

The parking position makes parking easier.

THE FRONT-PASSENGER OUTSIDE MIRROR WILL SWIVEL DOWNWARDS IN THE DIRECTION OF THE REAR WHEEL ON THE FRONT PASSENGER'S SIDE WHEN:

- the parking position is stored (⟶ page 298).
- the front-passenger mirror is selected.
- reverse gear is engaged.

THE FRONT-PASSENGER OUTSIDE MIRROR WILL MOVE BACK TO ITS ORIGINAL POSITION WHEN:

- you shift the transmission to another transmission position.
- you are travelling at a speed greater than 15 km/h.
- you press the button for the outside mirror on the driver's side.

Storing the parking position of the front-passenger outside mirror using reverse gear

STORING

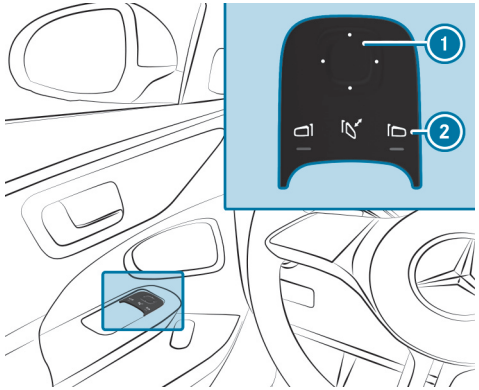

- ► Select the front-passenger outside mirror using button (2).
- ► Engage reverse gear.
- ► Move the front-passenger outside mirror into the desired parking position using button (1).

CALLING UP

- ► Select the front-passenger outside mirror using button (2).
- ► Engage reverse gear.

  The front-passenger outside mirror will move into the stored parking position.

Activating/deactivating the automatic mirror folding function

Multimedia system:

Settings » Vehicle » Opening/closing

- Activate or deactivate Automatic mirror fold-in.

Back to Contents

Climate control

This interactive PDF works like a website – tap or click a button to jump straight to where you want to go.
You can return here at any time via the navigation bar at the top left.

Overview of climate control systems

Operating the climate control system

Overview of climate control systems

Notes on climate control

An interior filter in combination with the prefilter in the engine compartment must always be used so that the air conditioning system, pollution level monitoring and the air filtration work correctly. Use filters recommended and approved by Mercedes-Benz. Always have maintenance work carried out at a qualified specialist workshop.

Overview of the THERMATIC climate bar

The indicator lamps indicate that the corresponding function is activated.

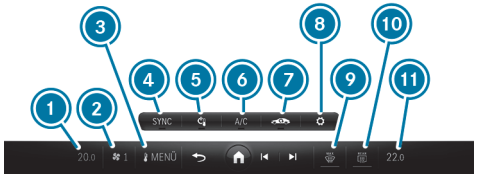

Front climate bar on the central display (example). The climate bar is displayed according to the respective settings.

1. Increases/reduces the temperature (driver's side)
2. Increases or reduces the airflow or switches on climate control (driver's side)(→ page 304)
3. MENU Calls up the air conditioning menu (→ page 306)
4. SYNC Synchronisation function (→ page 309)
5. Switches climate control on/off (→ page 304)
6. A/C Switches A/C function on/off (→ page 307)
7. Switches air-recirculation mode on/off (→ page 309, 310)
8. Settings
9. MAX Demists the windscreen
10. Example: REAR Switches the rear window heater on/off. This button can be assigned individually under Settings.
11. Increases/reduces the temperature (front passenger side)

If blowing at full capacity, the airflow is reduced automatically for an incoming phone call. The airflow can still be adjusted manually via 2.

The availability of individual functions depends on the respective equipment and country of use.

Overview of the THERMOTRONIC climate bar

The indicator lamps indicate that the corresponding function is activated.

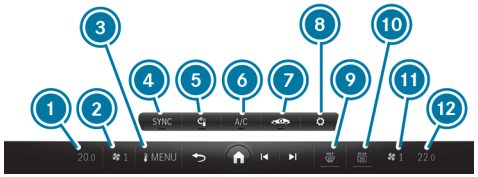

Front climate bar on the central display (example). The climate bar is displayed according to the respective settings.

1 Increases/reduces the temperature (front left)

2 Increases or reduces the airflow or switches on climate control (front left) (⟶ page 304)

3 MENU Calls up the air conditioning menu (⟶ page 306)

4 SYNC Synchronisation function (⟶ page 309)

5 Switches climate control on/off (⟶ page 304)

6 A/C Switches A/C function on/off (⟶ page 307)

7 Switches air-recirculation mode on/off (⟶ page 309, 310)
or Activates/deactivates residual heat utilisation (⟶ page 310)

8 Settings

9 MAX Demists the windscreen

10 Example: REAR Switches the rear window heater on/off. This button can be assigned individually under Settings.

11 Increases or reduces the airflow or switches on climate control (front right) (⟶ page 304)

12 Increases/reduces the temperature (front right)

If blowing at full capacity, the airflow is reduced automatically for an incoming phone call in order to minimise noise sources as much as possible. The airflow can be adjusted again via 2 or 11 .

The availability of individual functions depends on the respective equipment and country of use.

Overview of the rear operating unit

The rear operating unit is available only for vehicles with the THERMOTRONIC air conditioning control panel.

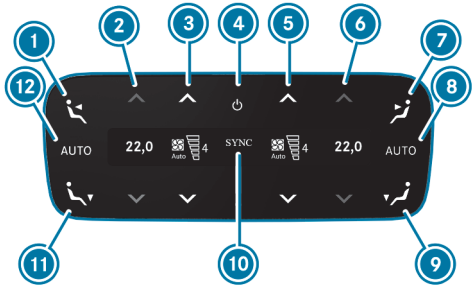

1 Sets air distribution to the centre and side air vents in the rear passenger compartment, left

2 Sets the temperature in the rear passenger compartment, left

3 Sets the airflow in the rear passenger compartment, left, or switches climate control on/off (⟶ page 304)

4 Switches climate control on/off (⟶ page 304)

5 Sets the airflow in the rear passenger compartment, right, or switches climate control on/off (⟶ page 304)

6 Sets the temperature in the rear passenger compartment, right

7 Sets air distribution to the centre and side air vents in the rear passenger compartment, right

⑧ Sets rear climate control to automatic mode, right (⟶ page 308)
⑨ Sets the air distribution to the right rear footwell vents
⑩ Synchronisation is activated (⟶ page 309)
⑪ Sets the air distribution to the rear left footwell vents
⑫ Sets rear climate control to automatic mode, left (⟶ page 308)

The settings for the second row of seats can be configured via the rear operating unit or the multimedia system (⟶ page 309) depending on the vehicle's equipment.

Operating the climate control system

Switching climate control on/off

SWITCHING ON CLIMATE CONTROL

- Set the airflow to level 1 or higher via [fan] on the climate bar on the central display.

or

- Press and hold [MENU].

or

- Select [MENU] and then press [power].

or

- Press [AUTO].

SWITCHING OFF CLIMATE CONTROL

- Set the airflow to level 0 via [fan] on the climate bar on the central display.

or

- Press [power].

If climate control is switched off, the windows may mist up more quickly. Switch climate control off only briefly.

If you switch off climate control by pressing [power], fragrancing, if enabled, will also be switched off automatically.

If climate control is switched off via [power], **OFF** will be shown on the climate bar.

Switching climate control on/off via the rear operating unit

SWITCHING ON

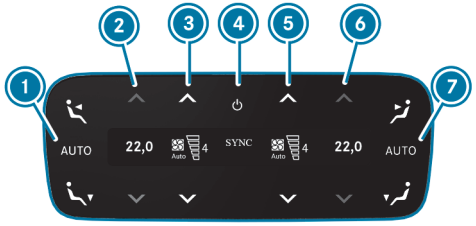

- Press button 4.

or

► Set the airflow to level 1 or higher using buttons 3 and 5.

or

► Press buttons 2, 6, 1 or 7.

SWITCHING OFF

► Press button 4.

or

► Set the airflow to level 0 using buttons 3 and 5.

ⓘ If rear climate control is switched off via button 4, **OFF** will be shown on the displays.

Configuring the climate bar

Multimedia system:

Climate menu >> First row of seats

On the climate menu, you can choose between the different assignments for the freely configurable button on the climate bar.

THE FOLLOWING ASSIGNMENTS ARE AVAILABLE ON THE CLIMATE MENU:

- PM2.5 Air quality
- Recirculated air
- A/C A/C function
- SYNC Synchronisation function
- REAR Rear window heater

ⓘ Functions that are not permanently set on the climate bar are available on the climate menu.

► Select ⚙.

► Select the desired function for the button in the window.
The function will be applied to the button.

ⓘ You can also access the window for assigning the button directly by pressing and holding the button once.

Setting the temperature and airflow

CALLING UP THE CONTROLLER FOR THE TEMPERATURE AND AIRFLOW

► To call up the controller: press the temperature displayed or on the climate bar of the central display.

or

► Swipe on the temperature displayed or on the climate bar of the central display.

SETTING THE TEMPERATURE

► Press the temperature display on the climate bar.

► To increase the temperature: press ⊕ or move the controller. Press and hold ⊕ to set the temperature to the maximum.

- To lower the temperature: press ⊖ or move the controller. To switch off climate control, press and hold ⊖.

ⓘ The temperature for the driver's and front passenger side can be operated only one after the other.

SETTING THE AIRFLOW

- Press [fan] on the climate bar on the central display.
- To increase the airflow: press ⊕ or move the controller. Press and hold ⊕ to set the airflow to the maximum.
- To reduce the airflow: press ⊖ or move the controller. To switch off the airflow, press and hold ⊖.

ⓘ The airflow will remain active if the AUTO function is activated.

Activating/deactivating the A/C function via the climate bar

The A/C function heats, cools and dehumidifies the vehicle's interior air.

- Press [A/C] on the climate bar on the central display.

ⓘ Switch off the A/C function only briefly, otherwise the windows may mist up more quickly.
Condensation may drip from the underside of the vehicle when cooling mode is active. This is not indicative of a fault.

Calling up the air conditioning menu using the climate bar

The air conditioning menu can be called up via the climate bar. The climate bar is always shown on the lower edge of the central display.

- Select the Climate menu entry in the air conditioning bar.
  The First row of seats menu is opened.

JUMPING DIRECTLY TO THE AIR QUALITY MENU

- Select the [PM2.5] fine particle status display in the air conditioning bar.
  The Air quality menu is opened. An animation of the automatic air cleaning taking place is shown.

ⓘ The fine particle status display is on the home screen next to the temperature display on the right and it informs you of the current particulate levels inside and outside of the vehicle.
The measurement values are shown with the µg/m^3 units (micrograms per cubic metre).

ⓘ The availability of individual functions depends on the country and equipment.

Demisting the windscreen via the climate bar

SWITCHING ON

- Press [MAX] on the climate bar on the central display.

SWITCHING OFF

- Press MAX, AUTO or on the climate bar on the central display.

or

- Set the airflow to 0.

When the demist function is activated via MAX, some functions (e.g. the temperature setting or the air distribution) will be automatically deactivated.

Activating/deactivating the A/C function via the air conditioning menu

Multimedia system:

Climate menu >> First row of seats

Depending on the external conditions, support for improved cooling and dehumidification of the interior air will be provided when the A/C function is activated. If it is not possible to operate the A/C function on the climate bar on the central display, switch the function on or off in the climate menu of the central display.

- Select A/C (A/C).

Switch off the A/C function only briefly. Otherwise, the windows may mist up more quickly.

Condensation may drip from the underside of the vehicle when cooling mode is active. This is not indicative of a fault.

Switching the steering wheel heater on or off via the air conditioning menu

Multimedia system:

Climate menu >> First row of seats

- Select .

  The indicator lamp lights up when the steering wheel heater is switched on.

Setting climate control to automatic mode

In automatic mode, the set vehicle interior temperature is controlled automatically and maintained at a constant level by the air supply.

- Press on the climate bar on the central display and then select AUTO.

You can increase or reduce the airflow via a controller by pressing on the climate bar of the multimedia system. The airflow will automatically be reduced in the event of an incoming call. You will still be able to adjust the airflow manually by pressing . In automatic mode, five levels can be set via the controller and seven levels can be set without automatic mode.

- **To switch to manual operation:** switch off automatic mode or adjust the air distribution, e.g. .

Setting climate control to automatic mode via the rear operating unit

In automatic mode, the temperature is automatically regulated by the temperature of the dispensed air and the airflow.



- Press button (1).

Overview of the air distribution settings

THE SYMBOLS ON THE CENTRAL DISPLAY INDICATE THE VENTS THROUGH WHICH THE AIRFLOW IS BEING DIRECTED:

- Demister vents
- Centre and side air vents
- Footwell vents

Setting air distribution and air vents using the air conditioning menu

Multimedia system:

Climate menu

SETTING THE AIR DISTRIBUTION

- Select First row of seats or Second row of seats.
- Select an air distribution option using the , or buttons.
- Set the airflow.

When the air conditioning system is switched on, at least one zone is always active. However, several air distribution options can be selected at the same time, for example to set the climate control for the vehicle interior and the footwells simultaneously. The climate control for the windscreen can only be selected for the first seat row. When automatic mode is active, the buttons for setting the air distribution are automatically deactivated. If the air conditioning system is switched off, the buttons can still be operated and the last setting is saved.

Setting rear climate control using the air conditioning menu

Multimedia system:

Climate menu

SETTING THE TEMPERATURE

- Select Second row of seats.
- Set the temperature.

SETTING THE AIRFLOW

- Select Second row of seats.
- Set the air flow with ▲ or ▼.

CONTROLLING THE REAR CLIMATE CONTROL AUTOMATICALLY

- Select AUTO.

ⓘ When the defrost function is activated, some functions (e.g. the temperature setting) will automatically be deactivated. To deactivate the defrost function, press either MAX, AUTO or set the air flow to level 0 (⟶ page 306).

Switching the synchronisation function on/off via the air conditioning menu

Multimedia system:

Climate menu » First row of seats

The synchronisation function controls the climate control centrally. The driver's settings for temperature, airflow and air distribution are automatically adopted for each climate zone.

- Select SYNC (SYNC).

Demisting the windows

WINDOWS MISTED UP ON THE INSIDE

- Press on the climate bar on the central display and then select AUTO.
- If the windows remain misted up: press MAX on the climate bar on the central display.

WINDOWS MISTED UP ON THE OUTSIDE

- Switch on the windscreen wipers.
- Press on the climate bar on the central display and then select AUTO.

Switching air-recirculation mode on/off

- Press on the climate bar on the central display.
  The interior air is recirculated.

Air-recirculation mode will automatically switch to fresh air mode after a while.

ⓘ The windows may mist up more quickly with air-recirculation mode switched on. Do not have air-recirculation mode switched on for long periods.

Switching air-recirculation mode on/off via the air-conditioning menu

Requirements:

- A fine particle prefilter is installed in the vehicle.

Multimedia system:

Climate menu » Air quality

► Press  in the upper display area of the climate bar.
The interior air is recirculated.

Air-recirculation mode will automatically switch to fresh air mode after a while.

ⓘ The windows may mist up more quickly with air-recirculation mode switched on. Do not have air-recirculation mode switched on for long periods.

ⓘ Selecting the fine particle status display  on the climate bar enables you to jump directly to the Air qualitymenu.

Switching residual heat mode on/off via the climate bar

Requirements:

- The residual heat function is available.
- The vehicle is parked.
- The coolant temperature is sufficiently high.

It is possible to make use of the residual heat from the engine to continue heating or ventilating the front compartment of the vehicle for approximately 30 minutes, depending on the temperature set.

► **To switch on or off:** select Residual heat on the climate bar of the central display.

The residual heat function will automatically switch off after a while.

ⓘ If residual heat utilisation is activated, the two buttons for setting the temperature and air distribution will automatically be deactivated.

Activating/deactivating ionisation

Multimedia system:

Climate menu » Air quality

When ionisation is activated, the air in the vehicle interior is enriched with negatively charged oxygen ions. These can promote the well-being of the vehicle occupants.

► Select Ionisation.

The function can only be performed if the AUTO mode is activated or the air distribution is set to the side air vent. The function is restricted if the side air vents on the driver's side are closed.

Fragrance system

ACTIVATING/DEACTIVATING THE FRAGRANCE SYSTEM USING THE MULTIMEDIA SYSTEM

Requirements:

- Automatic climate control is activated.
- The glove compartment is closed.
- A flacon is inserted.

Multimedia system:

Climate menu >> Air quality

The fragrance system distributes a pleasant fragrance throughout the vehicle interior from a flacon located in the glove box.

- ▶ Navigate down until the climate control bar is active.
- ▶ Select Air freshener.
- ▶ Activate or deactivate fragrancing.

SETTING THE FRAGRANCE SYSTEM

Requirements:

- The climate control system is switched on.
- The glove compartment is closed.
- A flacon is inserted.

Multimedia system:

Climate menu >> Air quality

- ▶ Select Air freshener.
- ▶ Continue pressing until the desired intensity is reached.

INSERTING OR REMOVING THE FLACON OF THE FRAGRANCE SYSTEM

WARNING
Risk of injury from liquid perfume

If children open the flacon, they could drink the liquid perfume or it could come into contact with their eyes.

- ▶ Do not leave children unattended in the vehicle.
- ▶ Consult a doctor immediately if liquid perfume has been drunk.
- ▶ If liquid perfume comes into contact with your eyes or skin, rinse your eyes with clean water.
- ▶ If symptoms continue, consult a doctor.

ENVIRONMENTAL NOTE
Environmental damage due to improper disposal of full flacons

: Full flacons may not be disposed of with household waste.

- ▶ Full flacons must be handed in at a pollutant collection point.

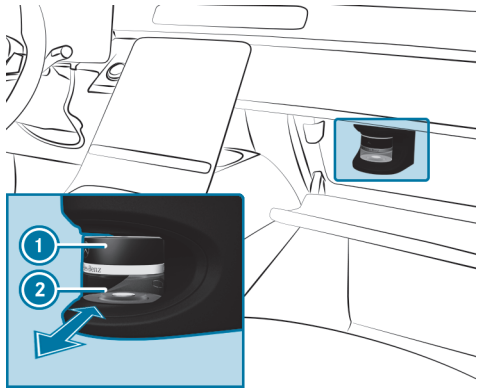

1 Cap
2 Flacon

- **To insert:** slide the flacon into the holder as far as it will go.
- **To remove:** After opening the glove box, wait for approximately seven seconds and pull out the flacon.

If you do not use genuine Mercedes-Benz interior perfumes, observe the manufacturers' safety notes on the perfume packaging.

Dispose of the genuine Mercedes-Benz interior perfume flacon when it is empty and do not refill it.

REFILLABLE FLACON

- Unscrew the cap of the empty flacon.
- Fill the flacon with a maximum of 15 ml.
- Screw the cap back onto the flacon.

Always refill the empty refillable flacon with the same perfume. Observe the separate information sheet attached to the flacon.

Pre-entry climate control upon unlocking the vehicle

FUNCTION OF PRE-ENTRY CLIMATE CONTROL UPON UNLOCKING
The seating areas can be precooled briefly prior to entering the vehicle.

Pre-entry climate control upon unlocking is only available for vehicles with plug-in hybrid and for some vehicles with 48 V on-board electrical system.

The seating areas in vehicles with plug-in hybrid can also be preheated briefly prior to entering the vehicle.

Vehicles with 48 V on-board electrical system: you can check whether your vehicle is equipped with the pre-entry climate control upon unlocking function in the Mercedes-Benz app.

DEPENDING ON THE VEHICLE'S EQUIPMENT, THE FOLLOWING FUNCTIONS WILL BE ACTIVATED AS REQUIRED DURING PRECOOLING:

- Automatic climate control
- Blower
- Seat ventilation

DEPENDING ON THE VEHICLE'S EQUIPMENT, THE FOLLOWING FUNCTIONS WILL BE ACTIVATED AS REQUIRED DURING PREHEATING:

- Automatic climate control
- Blower
- Seat heating
- Steering wheel heater
- Surface heating
- Mirror heater

- Rear window heater

DEPENDING ON THE VEHICLE'S EQUIPMENT, THE FOLLOWING FUNCTIONS WILL ALSO BE REGULATED DURING PRE-ENTRY CLIMATE CONTROL IF THEY HAVE ALREADY BEEN SWITCHED ON DURING REGULAR VEHICLE OPERATION:

- Air freshener
- Ionisation

SETTING PRE-ENTRY CLIMATE CONTROL UPON UNLOCKING IN THE MULTIMEDIA SYSTEM

Multimedia system:

Climate menu >> Pre-entry climate ctrl

This function is only available for plug-in hybrid vehicles.

- Activate or deactivate the function.

SELECTING SEATS

- Select Driver, Passenger, Rear left or Rear right.

  The seat-specific functions of pre-entry climate control (e.g.seat heating) are performed for the selected seats.

When pre-entry climate control is enabled, an LED on the climate bar on the central display will light up blue for a cooled vehicle and red for a heated vehicle.

ACTIVATING/DEACTIVATING PRE-ENTRY CLIMATE CONTROL UPON UNLOCKING

Requirements:

- The high-voltage battery or the 48 V battery is sufficiently charged.
- The function has been activated via the multimedia system or the Mercedes-Benz App.

Pre-entry climate control upon unlocking is only available for vehicles with plug-in hybrid and for some vehicles with 48 V on-board electrical system.

Vehicles with 48 V on-board electrical system: you can check whether your vehicle is equipped with the pre-entry climate control upon unlocking function in the Mercedes-Benz app.

- **To switch on:** unlock the vehicle.

  Vehicles with plug-in hybrid: the climate control functions are activated for up to five minutes for preheating and precooling.

  Vehicles with 48 V on-board electrical system: the climate control functions are activated for up to five minutes for precooling.

Pre-entry climate control upon unlocking cannot be activated more than three times when the vehicle is switched off.

- **To switch off:** press  on the climate bar on the central display, or switch off via the Mercedes-Benz app in some models with a 48 V on-board electrical system.

DEPENDING ON THE RESPECTIVE VEHICLE EQUIPMENT, THE FOLLOWING FUNCTIONS WILL REMAIN ACTIVE ONCE THE VEHICLE HAS BEEN STARTED:

- Seat heating
- Seat ventilation
- Surface heating
- Air freshener
- Ionisation

Pre-entry climate control for departure time

PRE-ENTRY CLIMATE CONTROL FOR DEPARTURE TIME FUNCTION

WARNING
Risk of fatalities due to exposure to extreme heat- or cold in the vehicle

If persons – and in particular children – are exposed to solar radiation, or the effects of heat or cold for prolonged periods of time, there is a risk of sustaining injuries or even fatalities!

► Never leave people – especially children – unattended in the vehicle.

WARNING
Risk of burns due to repeatedly switching on the seat heating

Repeatedly switching on the seat heating can cause the seat cushion and seat backrest padding to become very hot.

In particular, the health of persons with limited temperature sensitivity or a limited ability to react to high temperatures may be affected or they may even suffer burn-like injuries.

► Do not repeatedly switch on the seat heating.

To protect against overheating, the seat heating may be temporarily deactivated after it has been switched on repeatedly.

The pre-entry climate control for departure time function is only available in its entirety in vehicles with plug-in hybrid.

The air in the vehicle interior can be heated, ventilated or cooled to the set temperature when the vehicle is parked.

When the vehicle is connected to power supply equipment, priority will be given to charging the high-voltage battery to a specified minimum state of charge.

THE RUNNING TIME OF PRE-ENTRY CLIMATE CONTROL MAY BE REDUCED IN THE FOLLOWING CIRCUMSTANCES:

- The vehicle is not connected to power supply equipment.
- The high-voltage battery is not fully charged.

The state of charge for the high-voltage battery may be reduced with pre-entry climate control active, even if the charging cable connector is plugged in.

If available, seat ventilation will be activated in the cooling and ventilation modes.

DEPENDING ON THE RESPECTIVE VEHICLE EQUIPMENT, THE FOLLOWING FUNCTIONS WILL BE ACTIVATED IN HEATING MODE, IF AVAILABLE:

- Seat heating
- Steering wheel heater
- Surface heating
- Mirror heater
- Rear window heater

When the set temperature changes, climate control mode will automatically switch:

- from heating mode to ventilation or cooling mode, or
- from cooling mode to ventilation or heating mode, or

- from ventilation mode to heating or cooling mode

SETTING PRE-ENTRY CLIMATE CONTROL FOR DEPARTURE TIME VIA THE MULTIMEDIA SYSTEM

Multimedia system:

Climate menu >> Pre-entry climate ctrl

SETTING THE DEPARTURE TIME

ⓘ The option to adjust the pre-entry climate control for departure time function via the multimedia system is available only for plug-in hybrid vehicles.

ⓘ The set departure times are used for the vehicle's pre-entry climate control function and for predictions regarding the approximate state of charge and range at the time selected. Additional information on the charging settings: (⟶ page 605)

► Select Edit departure time.

► Select a departure time or set a new departure time.

SETTING REPEAT DAYS

► Select Edit departure time.

► Set the desired departure time and select the corresponding days on which this departure time is to apply.

► Press OK to confirm.

SELECTING SEATS

► Select Driver, Passenger, Rear left or Rear right.

Pre-entry climate control will be carried out for the selected seats.

When pre-entry climate control is enabled, an LED on the climate bar on the central display will light up blue for a cooled vehicle and red for a heated vehicle. When the departure time is selected, the LED in the climate bar lights up yellow on the central display.

ACTIVATING/DEACTIVATING PRE-ENTRY CLIMATE CONTROL FOR DEPARTURE TIME

⚠ **WARNING**
Risk of fatalities due to exposure to extreme heat- or cold in the vehicle

If persons – and in particular children – are exposed to solar radiation, or the effects of heat or cold for prolonged periods of time, there is a risk of sustaining injuries or even fatalities!

► Never leave people – especially children – unattended in the vehicle.

⚠ **WARNING**
Risk of burns due to repeatedly switching on the seat heating

Repeatedly switching on the seat heating can cause the seat cushion and seat backrest padding to become very hot.

In particular, the health of persons with limited temperature sensitivity or a limited ability to react to high temperatures may be affected or they may even suffer burn-like injuries.

► Do not repeatedly switch on the seat heating.

To protect against overheating, the seat heating may be temporarily deactivated after it has been switched on repeatedly.

The pre-entry climate control for departure time function is only available in its entirety in vehicles with plug-in hybrid.

Requirements:

- The vehicle has a wireless connection.
- The vehicle is linked to the user's Mercedes-Benz account.
- The high-voltage battery is sufficiently charged.
- The function has been activated via the multimedia system.

► **To activate:** set the departure time (⟶ page 315).

Pre-entry climate control for departure time will switch on a maximum of 55 minutes before the selected departure time. It will remain active for another five minutes if departure is delayed.

► **Switching off pre-entry climate control at departure time ahead of time:**

- Press  on the climate bar on the central display.
- Switch off preselection of the time in the air conditioning menu.

WHERE FEATURED, THE FOLLOWING FUNCTIONS WILL REMAIN ACTIVE ONCE THE VEHICLE HAS BEEN STARTED:

- Seat heating
- Seat ventilation
- Surface heating

DEPENDING ON THE VEHICLE'S EQUIPMENT, THE FOLLOWING FUNCTIONS WILL ALSO BE REGULATED DURING PRE-ENTRY CLIMATE CONTROL IF THEY HAVE ALREADY BEEN SWITCHED ON DURING REGULAR VEHICLE OPERATION:

- Air freshener
- Ionisation

Activating/deactivating immediate pre-entry climate control

WARNING
Risk of fatalities due to exposure to extreme heat- or cold in the vehicle

If persons – and in particular children – are exposed to solar radiation, or the effects of heat or cold for prolonged periods of time, there is a risk of sustaining injuries or even fatalities!

► Never leave people – especially children – unattended in the vehicle.

WARNING
Risk of burns due to repeatedly switching on the seat heating

Repeatedly switching on the seat heating can cause the seat cushion and seat backrest padding to become very hot.

In particular, the health of persons with limited temperature sensitivity or a limited ability to react to high temperatures may be affected or they may even suffer burn-like injuries.

► Do not repeatedly switch on the seat heating.

To protect against overheating, the seat heating may be temporarily deactivated after it has been switched on repeatedly.

Requirements:

- The vehicle is switched off.

Air-conditioning of the vehicle interior can continue (e.g.if a journey is interrupted) for up to 50 minutes in the case of plug-in hybrids and up to 5 minutes in the case of some models with a 48 V on-board electrical system.

► Press [ ] on the climate bar on the central display.
The red or blue indicator lamp below [ ] on the climate bar on the central display will light up or go out.

► Set the temperature using the [▼▲] arrows on the climate bar on the central display.

THE COLOURS OF THE INDICATOR LAMP HAVE THE FOLLOWING MEANINGS:

- **Blue:** stationary ventilation is switched on.
- **Red:** the stationary heater is switched on.
- **Yellow:** the departure time is preselected.

Stationary heater/ventilation

STATIONARY HEATER/VENTILATION FUNCTION

ⓘ The following function is equipment-dependent.

- The air inside the vehicle will be heated or ventilated to the set temperature.
- The air inside the vehicle cannot be cooled down to temperatures below the outside temperature.
- If the outside temperature changes, ventilation mode will automatically switch to heating mode or heating mode will automatically switch to ventilation mode.

The stationary heater and the exhaust gas outlet are situated behind the right front wheel.

SWITCHING THE AUXILIARY HEATING/VENTILATION ON/OFF

⚠ **DANGER**
Risk of fatal injury due to poisonous exhaust gases

If the tailpipe is blocked or sufficient ventilation is not possible, poisonous exhaust gases such as carbon monoxide may enter the vehicle. This is the case in enclosed spaces or if the vehicle gets stuck in snow, for example.

► Always switch the stationary heater off in enclosed spaces without an air extraction system, e.g. in garages.

► Keep the tailpipe and the area around the vehicle free from snow when the engine or the stationary heater is running.

► Open a window on the side of the vehicle facing away from the wind to ensure an adequate supply of fresh air.

WARNING
Risk of fire due to hot stationary heater components and exhaust gases

Flammable materials such as leaves, grass or twigs may ignite.

► When the stationary heater is switched on, make sure that:
- hot vehicle parts do not come into contact with flammable materials.
- the exhaust gas can flow out of the stationary heater exhaust pipe unhindered.
- the exhaust gas does not come into contact with flammable materials.

NOTE
Battery discharge caused by stationary heater or stationary ventilation operation

Operating the stationary heater or stationary ventilation drains the battery.

► After heating or ventilating the vehicle twice, drive for a longer period of time.

Requirements:

ⓘ The following function is equipment-dependent.

- The vehicle has a stationary heater.
- The outside temperature is below 15°C
- The fuel tank is sufficiently full.

ⓘ If the fill level of the fuel tank is too low, stationary heating mode may be restricted.

► Set the temperature using buttons ⊕ or ⊖ on the climate bar on the central display.

► Press the button on the control panel on the front centre console.
The red or blue indicator lamp on the button will light up or go out.

THE COLOURS OF THE INDICATOR LAMP HAVE THE FOLLOWING MEANINGS:

- **Blue:** stationary ventilation is switched on.
- **Red:** the stationary heater is switched on.
- **Yellow:** the departure time is preselected.

The stationary heater/ventilation will switch off automatically after 50 minutes.

SETTING THE AUXILIARY HEATING/VENTILATION VIA THE MULTIMEDIA SYSTEM

Requirements:

- The vehicle has a stationary heater.

Multimedia system:
Climate menu ▶▶ Stationary heater

SELECTING THE DEPARTURE TIME

► Select Time A, Time B or Time C.

SETTING THE DEPARTURE TIME

- ► Select Time A, Time B or Time C.
- ► Select the pen next to the time.
- ► Set a time.

Air vents

ADJUSTING THE FRONT AIR VENTS

WARNING
Risk of burns or frostbite due to being too close to the air vents

Very hot or very cold air can flow from the air vents.

- ► Make sure that all vehicle occupants always maintain a sufficient distance from the air vents.
- ► If necessary, direct the airflow to another area of the vehicle interior.

TO GUARANTEE THE FLOW OF FRESH AIR THROUGH THE AIR VENTS INTO THE VEHICLE INTERIOR, NOTE THE FOLLOWING:

- Always keep the air vents and ventilation grilles in the vehicle interior clear.
- Keep the air inlet free of residue build-up (⟶ page 725).

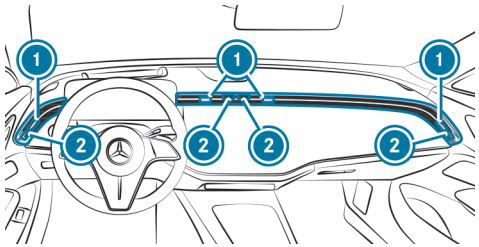

- ► **To adjust the airflow direction of the side and centre air vents:** hold the controller (1) and move it up or down or to the left or right.
- ► **To open or close the side and centre air vents:** turn the respective controller (2) up or down as far as it will go.

ADJUSTING THE REAR AIR VENTS

WARNING
Risk of burns or frostbite due to being too close to the air vents

Very hot or very cold air can flow from the air vents.

- ► Make sure that all vehicle occupants always maintain a sufficient distance from the air vents.
- ► If necessary, direct the airflow to another area of the vehicle interior.

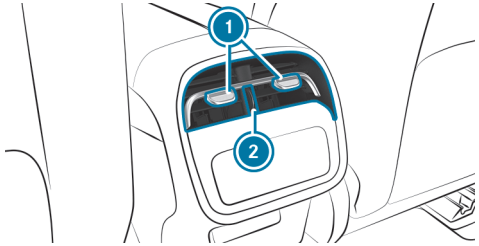

- **To open or close:** turn the controller (2) up or down as far as it will go.
- **To adjust the airflow direction:** hold the centre of the controller (1) and move it up or down or to the left or right.

ADJUSTING THE REAR SIDE AIR VENTS

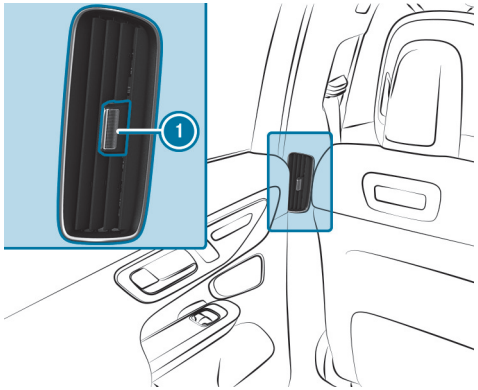

- **To open or close the side air vents in the rear:** hold the controller of the side air vent (1) and move it up or down as far as it will go.
- **To adjust the airflow direction of the side air vents:** hold the controller (1) and move it up or down or to the left or right.

Driving and parking

This interactive PDF works like a website – tap or click a button to jump straight to where you want to go.
You can return here at any time via the navigation bar at the top left.

Driving
DYNAMIC SELECT
Automatic transmission
Function of 4MATIC
Refuelling
Charging the high-voltage battery (plug-in hybrid)
Parking
Driving and driving safety systems
Trailer hitch
Bicycle rack function
Vehicle towing instructions

Driving

Notes on plug-in hybrids

NOTES ON PLUG-IN HYBRID OPERATION

WARNING
Risk of chemical burns and poisoning from damaged high-voltage battery

If the housing of the high-voltage battery has been damaged, electrolyte and gases may leak out.

- ► Avoid contact with the skin, eyes or clothing.
- ► Immediately rinse electrolyte splashes off with water and seek medical attention straight away.

WARNING
Risk of fire resulting from thermal runaway in the drive battery

If thermal runaway occurs in the drive battery, hot gas, smoke and particles can escape from the drive battery's pressure relief outlets.

This will result in a risk of fire and poisoning.

- ► Leave the danger zone immediately, and where possible, secure the danger zone at an adequate distance.
- ► Call the fire service.

The hybrid system combines a combustion engine with an electric motor.

CHARACTERISTICS WHEN THE VEHICLE IS AT A STANDSTILL:

- The combustion engine will generally be switched off.
- Engine idling will only occur in certain situations.

CHARACTERISTICS WHEN THE VEHICLE IS STARTED:

- Following an initial start, and provided that the high-voltage battery is sufficiently charged, the vehicle can be started without the combustion engine using electric drive (noiseless start).
- If the high-voltage battery for the electric drive system is not sufficiently charged or the vehicle conditions for a silent start are not met, the vehicle will start with the combustion engine.

Depending on the respective system, it may be possible that even though the high-voltage battery is charged, electric mode has limited or no availability. Once the combustion engine has been running for long enough in agreeable ambient conditions, electric mode will once more be available to its full extent.

CHARACTERISTICS WITH MODERATE PERFORMANCE REQUIREMENTS:

- The combustion engine will be switched off as often as possible during a journey.

- Depending on the drive program selected and the state of charge of the high-voltage battery, the vehicle can be accelerated electrically up to a speed of approximately 140 km/h.

CHARACTERISTICS WITH HIGH PERFORMANCE REQUIREMENTS:

- The electric motor will support the combustion engine (boost effect), e.g.when the vehicle is pulling away or accelerating.
- The high-voltage battery will be discharged.

CHARACTERISTICS UPON RELEASING THE ACCELERATOR PEDAL DURING TRAVEL:

- The electric motor will be operated as an alternator when in overrun mode and during braking.
- The high-voltage battery will be charged.

NOTES ON ELECTRIC MODE:

- Vehicles with hybrid systems generate significantly less noise when stationary and when being driven than vehicles with combustion engines.
- When you drive in electric mode, the vehicle may not be heard by other road users owing to the significantly reduced operating noise.

  It is for this reason that the vehicle is equipped with a sound generator, which serves as an acoustic vehicle alerting system (AVAS). This safety system is prescribed by law.

  The external noise produced by the sound generator can be heard in the vehicle interior at low speeds and does not constitute a malfunction.
- If not all vehicle conditions for electric mode are met, the combustion engine will be switched on.
- Performance limitations in electric mode are possible as a result of the operating temperature of the high-voltage battery and drive system, the ambient temperature and ageing of the high-voltage battery.
- In electric mode, maximum power will not be permanently available and may drop to continuous output.

ⓘ **Vehicles with diesel particulate filters:** during regeneration of the diesel particulate filter, drive programs may be unavailable or limited and the state of charge of the high-voltage battery may change.

NOTES ON THE ACOUSTIC VEHICLE ALERTING SYSTEM:

- The sound generator will produce speed-dependent driving noises when the vehicle is driving forwards or reversing up to a speed of approximately 30 km/h.
- This will help other road users, particularly pedestrians and cyclists, to hear your vehicle better.
- The acoustic vehicle alerting system will gradually switch off when the speed exceeds 20 km/h.
- The sound generator is switched off when the vehicle is stationary.

ⓘ **Mercedes-AMG vehicles:** the sound generator of the acoustic vehicle alerting system will also produce a noise (can be changed) while the vehicle is stationary.

MANUALLY DISCONNECTING THE HIGH-VOLTAGE ON-BOARD ELECTRICAL SYSTEM

DANGER
Risk of death and fire due to modified and/or damaged components of the high-voltage on-board electrical system

The vehicle's high-voltage on-board electrical system is under high voltage. If you modify component parts in the vehicle's high-voltage on-board electrical system or touch damaged component parts, you may be electrocuted. In addition, modified and/or damaged components may cause a fire.

In the event of an accident or impact to the underbody, components of the high-voltage on-board electrical system may be damaged although the damage is not visible.

- ► Never make any modifications to the high-voltage on-board electrical system.
- ► Do not switch on or use the vehicle if its high-voltage on-board electrical system components have been modified or damaged.
- ► Never touch damaged components of the high-voltage on-board electrical system.
- ► After an accident, do not touch any components of the high-voltage on-board electrical system.
- ► After an accident, have the vehicle transported away.
- ► Have the components of the high-voltage on-board electrical system checked at a qualified specialist workshop and replaced if necessary.

Requirements

ONLY DISCONNECT THE HIGH-VOLTAGE ON-BOARD ELECTRICAL SYSTEM MANUALLY IN THE FOLLOWING SITUATIONS:

- The restraint system warning lamp lights up in the driver display, e.g. after an accident.
- The vehicle is badly damaged, e.g. after an accident, and restraint system components have not been triggered.

OPERATING THE HIGH-VOLTAGE DISCONNECT DEVICE

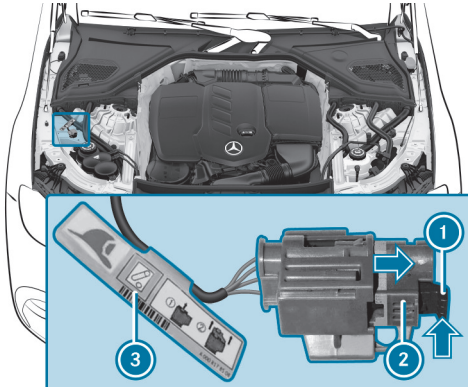

- ► Switch off the vehicle.
- ► Shift the transmission to position P.
- ► Apply the electric parking brake.
- ► Secure the vehicle against rolling away.
- ► Open the bonnet.

- ► Observe additional label (3) for high-voltage disconnect device (2).
- ► Press release tab (1) in the direction of the arrow and pull it out.
- ► Pull high-voltage disconnect device (2) in the direction of the arrow until it engages.
  The high-voltage on-board electrical system is switched off.

All work on the hybrid drive system– (including after disconnecting the high-voltage on-board electrical system manually–) may only be carried out in a qualified specialist workshop.

Switching on the power supply or the vehicle

WARNING
Accident– and risk of injury with unsupervised children in the vehicle

IF YOU LEAVE CHILDREN UNATTENDED IN THE VEHICLE, THEY CAN IN PARTICULAR

- Open doors and thereby endanger other persons or road users.
- get out of the car and are hit by traffic.
- Operate vehicle equipment and become trapped, forexample.

IN ADDITION, THE CHILDREN COULD ALSO SET THE VEHICLE IN MOTION, FOR EXAMPLEBY:

- releasing the parking brake.
- change the gearbox setting.
- start the vehicle.

- ► Never leave children unattended in the vehicle.
- ► When leaving the vehicle, always take the SmartKey with you and lock the vehicle.
- ► Keep the key out of reach of children.

This also applies to the Digital Vehicle Key.

Requirements:

- The key is in the vehicle and is recognised.

- **Vehicles with Digital Vehicle Key:** a Digital Vehicle Key with drive authorisation is detected.
- The brake pedal is not depressed.

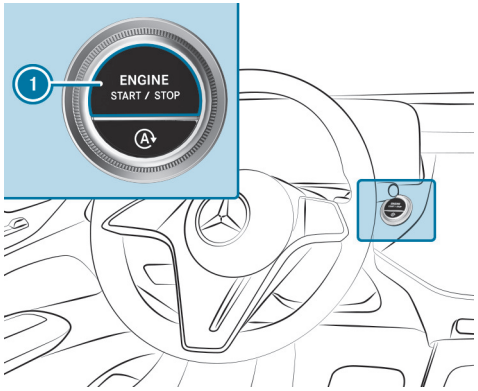

► **To switch on the power supply:** press the button (1) once.

You can switch on the windscreen wiper, forexample.

THE POWER SUPPLY WILL BE SWITCHED OFF AGAIN IF THE FOLLOWING CONDITIONS ARE MET:

- You open the driver's door.
- You press the button (1) twice more.

► **To switch on the vehicle:** press the button (1) twice.

Indicator lamps and warning lamps will light up on the driver display.

THE VEHICLE WILL BE SWITCHED OFF AGAIN IF ONE OF THE FOLLOWING CONDITIONS IS MET:

- You do not start the vehicle within 15 minutes and the transmission is in position P or the electric parking brake is applied.
- You press the button (1) once.

Starting the vehicle with the start/stop button

DANGER

Danger to life from toxic exhaust gas in enclosed spaces

Combustion engines emit toxic exhaust gases suchas carbon monoxide. Inhaling these exhaust gases is hazardous to health and leads to poisoning.

► Never leave the engine or, if present, the stationary heater running in an enclosed space without sufficient ventilation.

WARNING

Risk of fire due to flammable materials in the engine compartment or on the exhaust system

Flammable materials may ignite.

► Therefore, regularly check that there are no flammable foreign materials in the engine compartment or on the exhaust system.

WARNING
Accident– and risk of injury with unsupervised children in the vehicle

IF YOU LEAVE CHILDREN UNATTENDED IN THE VEHICLE, THEY CAN IN PARTICULAR

- Open doors and thereby endanger other persons or road users.
- get out of the car and are hit by traffic.
- Operate vehicle equipment and become trapped, forexample.

IN ADDITION, THE CHILDREN COULD ALSO SET THE VEHICLE IN MOTION, FOR EXAMPLEBY:

- releasing the parking brake.
- change the gearbox setting.
- start the vehicle.

► Never leave children unattended in the vehicle.

► When leaving the vehicle, always take the SmartKey with you and lock the vehicle.

► Keep the key out of reach of children.

This also applies to the Digital Vehicle Key.

Requirements:

- The key is in the vehicle and is detected.
- **Vehicles with Digital Vehicle Key:** a Digital Vehicle Key with drive authorisation is detected.

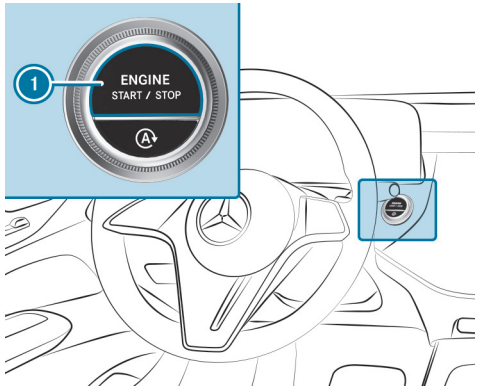

► Shift the transmission to position P or N.

► Depress the brake pedal and press the button 1 once.

► If the vehicle does not start, switch off unnecessary consumers and press the button 1 once.

► If the vehicle still does not start and the Place the key in the marked space See Owner's Manual display message appears on the driver display, start the vehicle with the key in the storage compartment (emergency operation mode) (⟶ page 328).

You can switch off the vehicle while driving. Switch off the vehicle by pressing and holding the button 1 for about three seconds or pressing the button 1 three times within three seconds. It is imperative that the safety notes under "Driving tips" are observed (⟶ page 333).

Observe any information regarding display messages that may be shown on the driver display.

Starting the vehicle in emergency operation mode

DANGER
Danger to life from toxic exhaust gas in enclosed spaces

Combustion engines emit toxic exhaust gases suchas carbon monoxide. Inhaling these exhaust gases is hazardous to health and leads to poisoning.

- ► Never leave the engine or, if present, the stationary heater running in an enclosed space without sufficient ventilation.

WARNING
Risk of fire due to flammable materials in the engine compartment or on the exhaust system

Flammable materials may ignite.

- ► Therefore, regularly check that there are no flammable foreign materials in the engine compartment or on the exhaust system.

WARNING
Accident– and risk of injury with unsupervised children in the vehicle

IF YOU LEAVE CHILDREN UNATTENDED IN THE VEHICLE, THEY CAN IN PARTICULAR

- Open doors and thereby endanger other persons or road users.
- get out of the car and are hit by traffic.
- Operate vehicle equipment and become trapped, forexample.

IN ADDITION, THE CHILDREN COULD ALSO SET THE VEHICLE IN MOTION, FOR EXAMPLEBY:

- releasing the parking brake.
- change the gearbox setting.
- start the vehicle.

- ► Never leave children unattended in the vehicle.
- ► When leaving the vehicle, always take the SmartKey with you and lock the vehicle.
- ► Keep the key out of reach of children.

This also applies to the Digital Vehicle Key.

START THE VEHICLE WITH THE KEY IN THE MARKED SPACE.
If the vehicle does not start and the Place the key in the marked space See Owner's Manual display message appears on the driver display, you can start the vehicle in emergency operation mode.

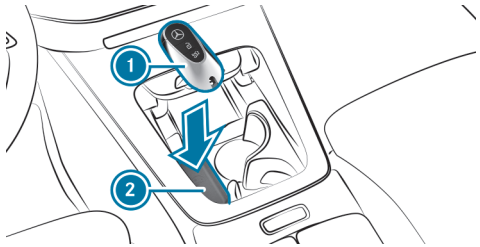

- Ensure that the storage compartment (2) is empty.
- Remove the key (1) from the key ring.
- Place the key (1) on the symbol in the storage compartment (2).
  The vehicle will start after a short delay.
  If you remove the key (1) from the storage compartment (2), the vehicle will still be ready to drive. For further vehicle starts, however, the key (1) must be located on the symbol in the storage compartment (2) during the entire journey.
- Have the key (1) checked at a qualified specialist workshop.

IF THE VEHICLE DOES NOT START:

- Place the key (1) in the storage compartment (2) and leave it there.
- Depress the brake pedal and start the vehicle using the start/stop button.

ⓘ You can also switch on the power supply or the vehicle independently with the start/stop button (⟶ page 325).

Observe any information regarding display messages that may be shown on the driver display.

STARTING THE VEHICLE WITH THE DIGITAL VEHICLE KEY IN THE MARKED SPACE

REQUIREMENTS:

- The vehicle is equipped with the "Digital Vehicle Key" pre-installation.
- A Digital Vehicle Key with drive authorisation is detected.

ⓘ Alternatively, you can use the vehicle key for emergency operation mode.
Mercedes-Benz recommends that you carry the vehicle key about your person as a safeguard against functional restrictions.

If the vehicle does not start and the Searching for key in stowage tray or Digital Vehicle Key in inductive charging bracket... See Owner's Manual display message appears on the driver display, you can start the vehicle in emergency operation mode.

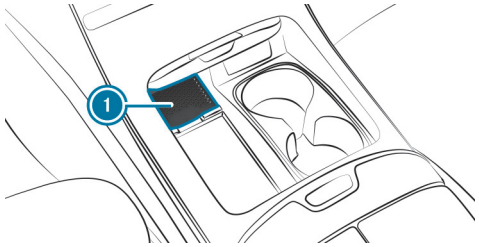

- Place the Digital Vehicle Key in the marked space (1).
- Depress the brake pedal and start the vehicle using the start/stop button.
  It may take a few seconds until the vehicle starts.
- When the display message Key not detected appears on the driver display, press the start/stop button again.

Starting the vehicle via Remote Online Services

COOLING OR HEATING THE VEHICLE INTERIOR BEFORE STARTING THE JOURNEY

ENSURE THE FOLLOWING BEFORE STARTING THE ENGINE:

- The legal stipulations in the area where your vehicle is parked allow engine starting via smartphone.
- It is safe to start and run the engine where your vehicle is parked.
- The fuel tank is sufficiently full.
- The starter battery is sufficiently charged.

CHARGING THE STARTER BATTERY BEFORE STARTING THE JOURNEY

You can receive a message on your smartphone when the state of charge of the starter battery is low. You can then start the vehicle with the smartphone to charge the battery. The vehicle is automatically switched off after ten minutes.

ENSURE THE FOLLOWING BEFORE STARTING THE ENGINE:

- The legal stipulations in the area where your vehicle is parked allow engine starting via smartphone.
- It is safe to start and run the engine where your vehicle is parked.
- The fuel tank is sufficiently full.

STARTING THE VEHICLE (REMOTE ONLINE)

DANGER
Danger to life from toxic exhaust gas in enclosed spaces

Combustion engines emit toxic exhaust gases suchas carbon monoxide. Inhaling these exhaust gases is hazardous to health and leads to poisoning.

► Never leave the engine or, if present, the stationary heater running in an enclosed space without sufficient ventilation.

WARNING
Risk of fire due to flammable materials in the engine compartment or on the exhaust system

Flammable materials may ignite.

► Therefore, regularly check that there are no flammable foreign materials in the engine compartment or on the exhaust system.

WARNING
Risk of crushing or entrapment due to unintentional starting of the engine

Limbs could be crushed or trapped if the engine is started unintentionally during service or maintenance work.

► Always secure the engine against unintentional starting before carrying out maintenance or repair work.

WARNING
Accident– and risk of injury with unsupervised children in the vehicle

IF YOU LEAVE CHILDREN UNATTENDED IN THE VEHICLE, THEY CAN IN PARTICULAR

- Open doors and thereby endanger other persons or road users.
- get out of the car and are hit by traffic.
- Operate vehicle equipment and become trapped, forexample.

IN ADDITION, THE CHILDREN COULD ALSO SET THE VEHICLE IN MOTION, FOR EXAMPLEBY:

- releasing the parking brake.
- change the gearbox setting.
- start the vehicle.

► Never leave children unattended in the vehicle.

► When leaving the vehicle, always take the SmartKey with you and lock the vehicle.

► Keep the key out of reach of children.

This also applies to the Digital Vehicle Key.

Requirements:

- Park position P is engaged.
- The anti-theft alarm system is not active.
- The hazard warning light system is switched off.
- The bonnet is closed.
- The doors are closed and locked.
- The windows and sliding sunroof are closed.

► Start the vehicle using your smartphone.
After every vehicle start, the engine will run for ten minutes.

You can carry out a maximum of two consecutive starting attempts. You must start the vehicle with the key before trying to start the vehicle with your smartphone again.

YOU CAN SWITCH OFF THE VEHICLE AT ANY TIME AS FOLLOWS:

- Via the Mercedes-Benz app
- By pressing the [ ] or [ ] button on the key

ⓘ Additional information can be found in the Mercedes-Benz app.

TO SECURE THE VEHICLE AGAINST STARTING BEFORE CARRYING OUT MAINTENANCE OR REPAIR WORK:

► Switch on the hazard warning light system.

or

► Unlock the doors.

or

► Open a side window or the sliding sunroof.

Running-in notes

TO PRESERVE THE ENGINE DURING THE FIRST 1500 KM:

- Drive at varying road speeds and engine speeds.
- Do not drive faster than 140 km/h.
- Drive the vehicle in drive program C or E.
  Plug-in hybrid: use drive program EL, H or B.
- Then shift to the next higher gear at the very latest when the needle reaches the last third before the red area in the rev counter.
- Do not shift down manually in order to brake.
- Avoid overstraining the vehicle, e.g. by driving at full throttle.
- Do not depress the accelerator pedal past the pressure point (kickdown).
- Only increase the engine speed gradually and accelerate the vehicle to full speed after 1500 km.

This also applies when the engine or parts of the drivetrain have been replaced.

PLEASE ALSO OBSERVE THE FOLLOWING RUNNING-IN NOTES:

- In certain handling and driving safety systems, the sensors adjust automatically while a certain distance is being driven after the vehicle has been delivered or after repairs. Full system effectiveness is only reached when this teaching-in process has concluded.
- Brake pads, brake discs and tyres that are either new or have been replaced only achieve optimum braking effect and grip after driving several hundred kilometres. Compensate for the reduced braking effect by applying greater force to the brake pedal.

Notes on optimised acceleration

If all necessary requirements and activation conditions are fulfilled, the best possible acceleration can be achieved from a standstill.

Do not use optimised acceleration on public roads. Individual wheels could spin and you could lose control of the vehicle. There is an increased risk of skidding and/or accident.

Be sure to observe the safety notes and information on ESP® (→ page 415).

Pulling away with optimised acceleration

WARNING
Risk of skidding and accidents due to wheelspin

If you pull away with optimised acceleration, individual wheels could spin and you could lose control of the vehicle.

There is a higher risk of skidding and accidents when ESP® is deactivated in particular.

► Make sure that there are no persons or obstacles in the vicinity of the vehicle.

Requirements

- The vehicle is run in (→ page 332).
- The vehicle and tyres are in good condition.
- The road surface is high-grip.
- The engine and transmission are at normal operating temperature.

NOTE
Increased wear due to optimised acceleration

When pulling away with optimised acceleration, all components of the drivetrain are subjected to a very high load.

This can lead to increased component wear.

- Do not always pull away with optimised acceleration.

- Engage the D drive position (⟶ page 361).
- Move the steering wheel to the straight-ahead position.
- Select drive program S (⟶ page 352).
- Deactivating ESP® (⟶ page 419).
- Depress and hold the brake pedal firmly with your left foot.
- Fully depress the accelerator pedal with your right foot.
- After no more than five seconds, quickly take your left foot off the brake, but keep the accelerator pedal depressed.
  The vehicle will pull away at maximum acceleration.
- Switch on ESP® once the acceleration procedure is complete.

ENDING OPTIMISED ACCELERATION

- Remove your foot from the accelerator pedal.
- Reactivate ESP®.

After you pull away with optimised acceleration, components of the drivetrain may become very hot, which means that optimised acceleration values may be reached again only after a few minutes.

Notes on driving

WARNING
Risk of accident due to objects in the driver's footwell

Objects in the driver's footwell may impede pedal travel or block a depressed pedal.

This will jeopardise the operating and road safety of the vehicle.

- Stow all objects in the vehicle securely so that they cannot get into the driver's footwell.
- Make sure that there is always sufficient clearance for the pedals.
- Always fit the floor mats securely and as prescribed.
- Do not use loose floor mats and do not place floor mats on top of one another.

WARNING
Risk of accident due to incorrect footwear

INCORRECT FOOTWEAR INCLUDES, FOR EXAMPLE:

- shoes with platform soles
- shoes with high heels
- slippers

There is a risk of an accident.

► Always wear suitable footwear so that you can operate the pedals safely.

WARNING
Risk of accident if the vehicle is switched off while driving

If you switch off the vehicle while driving, safety functions are restricted or no longer available.

This may affect the power steering system and the brake force boosting, for example.

You will need to use considerably more force to steer and brake, for example.

► Do not switch off the vehicle while driving.

DANGER
Danger to life from toxic exhaust gas in enclosed spaces

Combustion engines emit toxic exhaust gases suchas carbon monoxide. Inhaling these exhaust gases is hazardous to health and leads to poisoning.

► Never leave the engine or, if present, the stationary heater running in an enclosed space without sufficient ventilation.

WARNING
Risk of skidding and of an accident due to shifting down on slippery road surfaces

If you shift down on slippery road surfaces to increase the engine braking effect, the drive wheels may lose traction.

► Do not shift down on slippery road surfaces to increase the engine braking effect.

DANGER
Risk of fatal injury from toxic exhaust gases if the tailpipe is blocked

Combustion engines emit toxic exhaust gases such as carbon monoxide. Inhaling these exhaust gases is harmful to health and leads to poisoning. If the tailpipe is blocked or sufficient ventilation is not possible, exhaust gases can enter the vehicle. This is the case, for example, if the vehicle gets stuck in the snow.

- When the engine or stationary heater is running, keep the tailpipe and the area around the vehicle free of snow.
- To ensure a sufficient supply of fresh air, open a window on the side of the vehicle facing away from the wind.

WARNING
Risk of accident due to the brake system overheating

If you leave your foot on the brake pedal when driving, the brake system may overheat.

This increases the braking distance and the brake system can even fail.

- Never use the brake pedal as a footrest.
- Do not depress the brake pedal and the accelerator pedal at the same time while driving.

NOTE
Engine damage due to excessive engine speed

You will damage the engine if you drive at excessive engine speeds.

- Do not drive at engine speeds in the red area of the rev counter, or shown in red in the driver display.

NOTE
Causing wear to the brake linings by permanently depressing the brake pedal

- Do not permanently depress the brake pedal while driving.
- To use braking effect of the engine, shift to a lower gear in good time.

NOTE
Damage to the drivetrain and engine when pulling away

- Do not warm up the engine while the vehicle is stationary. Pull away immediately.
- Avoid high engine speeds and driving at full throttle until the engine has reached its operating temperature.

NOTE
Damage to the catalytic converter due to non-combusted fuel

The engine is not running smoothly and is misfiring.

Non-combusted fuel may get into the catalytic converter.

- ► Only depress the accelerator pedal slightly.
- ► Have the cause rectified immediately at a qualified specialist workshop.

NOTE
Reduced battery life due to frequent short-distance trips

The 12 V battery may not be sufficiently charged when the vehicle is used only for short-distance trips. This reduces the life of the battery.

- ► Drive longer distances regularly to charge the battery.

NOTE
Vehicle damage due to failure to observe the maximum permissible clearance height

If the vehicle height exceeds the maximum permissible clearance height, the roof and other vehicle parts may be damaged.

- ► Please observe the indicated maximum clearance height.
- ► If the vehicle exceeds the permissible clearance height, do not drive in.
- ► Take the modified vehicle height in the case of roof superstructures or other carrier systems into account.

ⓘ Please bear in mind that all speed values stated in this Owner's Manual are approximate values and are subject to a certain tolerance.

NOTES ON DRIVING WITH A ROOF LOAD, TRAILER OR FULLY LADEN VEHICLE

Driving with a loaded roof luggage rack or trailer, or with the vehicle fully laden or occupied, changes the handling and steering characteristics of your vehicle.

THEREFORE PLEASE OBSERVE THE FOLLOWING NOTES:

- Do not exceed the permissible roof load and trailer load. Also observe the information in the technical data in this respect.
- Distribute the roof load and vehicle load evenly, and place heavy objects at the bottom. Also observe the notes on loading the vehicle (⟶ page 256).

- Drive with care. Avoid sudden starting, braking and steering manoeuvres or fast cornering.
- If trailer operation is permitted, observe the notes on trailer operation (⟶ page 503).

NOTES ON DRIVING ON ROADS TREATED WITH DE-ICING SALT
The braking effect is limited on road surfaces treated with de-icing salt.

PLEASE THEREFORE BEAR IN MIND THE FOLLOWING NOTES:

- Due to salt build-up on the brake discs and brake linings, the braking distance can increase considerably or braking may be one-sided.
- Maintain a much greater safety distance to the vehicle travelling ahead.

REMOVE SALT BUILD-UP AS FOLLOWS:

- Brake occasionally, paying attention to the traffic conditions.
- Carefully depress the brake pedal at the end of the journey and when starting the next journey.

NOTES ON AQUAPLANING
Aquaplaning can take place if a certain depth of water has built up on the road surface.

OBSERVE THE FOLLOWING NOTES DURING HEAVY PRECIPITATION OR IN CONDITIONS IN WHICH AQUAPLANING MAY OCCUR:

- Reduce speed.
- Avoid tyre ruts.
- Avoid sudden steering movements.
- Brake carefully.

ⓘ Also observe the notes on regularly checking wheels and tyres (⟶ page 46).

NOTES ON DRIVING THROUGH WATER ON THE ROAD
Water ingress can damage the engine, electrics and transmission.

Water can also enter the air intake fittings of the engine and cause engine damage.

OBSERVE THE FOLLOWING IF YOU NEED TO DRIVE THROUGH WATER:

- The water, when calm, should reach no higher than the lower edge of the vehicle body.
- Drive at a walking pace at most, otherwise water may enter the vehicle interior or engine compartment.
- Vehicles travelling ahead, or oncoming vehicles, can create waves which may exceed the maximum permissible depth of water.

The braking effect of the brakes is reduced after fording. Brake carefully, paying attention to the traffic conditions, until the braking effect has been fully restored.

Function of rear axle steering

The rear axle steering is an electromechanical auxiliary steering on the rear axle which adjusts the steering of the rear wheels according to the position of the front wheels, depending on the speed. This results in greater mobility and improved driving stability for the vehicle.

REAR AXLE STEERING HAS THE FOLLOWING CHARACTERISTICS:

- reduced steering effort and turning circle resulting in reduced parking effort
- more direct steering resulting in improved control of the vehicle
- improved cornering of the vehicle

If you have fitted snow chains, switch on the snow chain mode (⟶ page 772).

ECO start/stop function

ECO START/STOP FUNCTION

ⓘ **Plug-in hybrid:** this function is not available.

ⓘ Depending on the engine, the ECO start/stop function is not available in all drive programs. Observe the status display on the driver display in this regard.

THE ENGINE WILL BE SWITCHED OFF AUTOMATICALLY IN THE FOLLOWING SITUATIONS IF ALL VEHICLE CONDITIONS FOR AN AUTOMATIC ENGINE STOP ARE MET:

- You brake the vehicle until it comes to a standstill in transmission position D or N.
- You depress the brake pedal when travelling at a low speed.

IF THE SYSTEM HAS DETECTED ONE OF THE FOLLOWING SITUATIONS, THE ENGINE WILL NOT STOP:

- You stop at a stop sign and there is no vehicle in front of you.
- The vehicle that stopped in front of you pulls away again.
- You manoeuvre, turn the steering wheel sharply or engage reverse gear.

This prevents the engine from stopping briefly.

ⓘ If the system detects a stop inhibitor to prevent a short stop (e.g.a stop sign), the engine will not stop.
If you activate the HOLD function or engage park position P, the engine can be switched off in spite of such a stop inhibitor.

THE ENGINE WILL RESTART AUTOMATICALLY IN THE FOLLOWING CASES:

- You engage transmission position D (depending on engine) or R.
- You depress the accelerator pedal.
- The vehicle requires an automatic engine start.
- You release the brake pedal.
- You release the brake pedal on a downhill gradient and the vehicle does not roll.
- The vehicle rolls on a downhill gradient and does not automatically enter gliding mode at 20 km/h.

ECO START/STOP FUNCTION SYMBOLS ON THE DRIVER DISPLAY:

- The Ⓐ symbol (green) appears when the vehicle is at a standstill: the engine was switched off by the ECO start/stop function.
- The Ⓐ symbol (yellow) appears when the vehicle is at a standstill: not all vehicle conditions for an engine stop have been met.

- Neither the Ⓐ nor Ⓐ symbol appears when the vehicle is at a standstill: a stop inhibitor to prevent a short stop has been detected (e.g.a stop sign).
- The Ⓐ OFF symbol appears: the ECO start/stop function is deactivated or there is a malfunction.

If the engine was switched off by the ECO start/stop function and you leave the vehicle, a warning tone will sound and the engine will not be restarted. In addition, the following display message will appear on the driver display:

Vehicle is operational Switch off vehicle before exiting

If you do not switch off the vehicle, it will automatically be switched off after three minutes.

SWITCHING THE ECO START/STOP FUNCTION ON/OFF

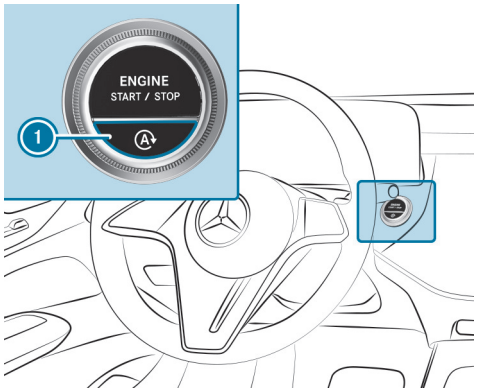

► Press button 1.

An indicator will appear on the driver display when you switch the ECO start/stop function on/off.

ⓘ Ⓐ OFF will be shown permanently on the driver display while the ECO start/stop function is deactivated.

ECO display function

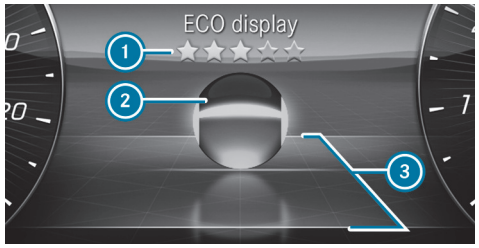

The ECO display shows an evaluation of your driving style on the driver's display depending on the situation. This enables you to check the efficiency of your driving style and adjust it if necessary. The ECO display menu shows a ball 2 that will roll forwards or backwards in the direction of travel on a stylised road according to the driving characteristics.

Above and below the road, lines mark the area for an efficient driving style 3. Ball 2 will light up in green if it is rolling within these lines. Outside the lines, the ball will light up in orange.

THE ECO DISPLAY ASSESSES THE FOLLOWING CRITERIA FOR AN ECONOMICAL DRIVING STYLE:

- Coasting at the right times
- consistent speed
- moderate acceleration

The overall assessment of your driving style "from start" is indicated using stars 1. It starts with five empty stars, which you can fill one after the other

if you drive efficiently. When all five stars are filled, a glow will appear in the background.

ⓘ You can call up the ECO display function via the Classic menu (⟶ page 521).

ECO Assist function (vehicles with 48 V on-board electrical system)

For plug-in hybrids, note the ECO Assist information (⟶ page 343).

ⓘ ECO Assist is active only in drive programs [E] and [C].

ECO Assist analyses data for the vehicle's expected route. This allows the system to optimally adjust the driving style for the route ahead, save fuel and recuperate. If the system detects an event ahead and the vehicle is approaching this event, ECO Assist will calculate the optimum speed for maximum fuel economy and recuperative energy based on the distance, speed and downhill gradient.

If deceleration provided by ECO Assist is not adequate, you must additionally depress the service brake. This will apply in particular if, forexample, you start driving again in slow-moving traffic and there is minimal distance to the vehicle in front.

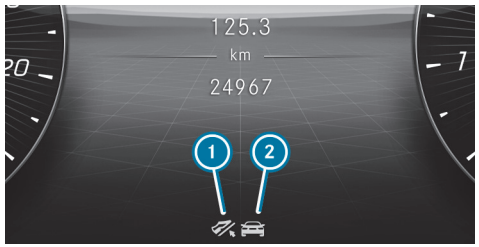

1 "Foot off the accelerator" recommendation
2 Route event ahead

If in drive program [E], a route event or vehicle that requires an adjustment of your driving style for increased efficiency is detected ahead, the corresponding symbol 2 and the symbol [] (grey) will be displayed.

If you release the accelerator pedal, the symbol [] will turn green and recuperation in overrun mode will be initiated. If deceleration is not adequate, additionally depress the service brake. If ECO Assist intervenes for a route event ahead (not for a vehicle in front) and you then depress the accelerator pedal again, you will cancel control by ECO Assist.

THE ECO ASSIST DISPLAY WILL BE HIDDEN AGAIN IN THE FOLLOWING CASES:

- You do not react to the ECO Assist recommendation for a certain period of time.
- You depress the accelerator pedal while ECO Assist is intervening for a route event ahead (not for a vehicle in front).
- ECO Assist cannot identify any further recommendations from the route ahead.

IN ADDITION TO A VEHICLE IN FRONT [car], ECO ASSIST CAN DETECT THE FOLLOWING ROUTE EVENTS (2) DEPENDING ON THE VEHICLE'S EQUIPMENT:

- Roundabout
- Sharp bend
- Junction
- T-junction
- Downhill gradient
- Speed limit

ⓘ In drive program [C], ECO Assist will react only to the "vehicle in front" route event without displaying the route event [car] or recommendation [hand].

SYSTEM LIMITS

ECO Assist will operate with greater accuracy if the calculated route is followed with route guidance active. The basic function is also available when route guidance is not active. Not all information and traffic situations can be anticipated. Quality will depend on the available map data.

ECO Assist serves solely as an aid. The driver is responsible for keeping a safe distance from the vehicle in front, for vehicle speed and for braking in good time.

THE SYSTEM MAY BE IMPAIRED OR INOPERATIVE IN THE FOLLOWING SITUATIONS:

- if there is poor visibility, e.g.due to insufficient illumination of the road, highly variable shade conditions, rain, snow, fog or heavy spray
- if there is glare, e.g.from oncoming traffic, direct sunlight or reflections
- if the windscreen is dirty in the vicinity of the multifunction camera
- if the multifunction camera is misted up, damaged or obscured
- if road signs are difficult to detect (e.g.due to dirt, snow or insufficient lighting) or because they are obscured
- if the digital road map of the navigation system has incorrect or outdated information
- if signs are ambiguous (e.g.road signs at roadworks or in adjacent lanes)
- if the radar sensors are dirty or obscured
- when you drive on roads with steep gradients
- if there are narrow vehicles in front, such as bicycles or motorcycles

Recuperative brake system (plug-in hybrid)

FUNCTION OF THE REGENERATIVE BRAKE SYSTEM

ⓘ The function is only available for plug-in hybrids.

The regenerative brake system converts the vehicle's kinetic energy into electrical energy during overrun mode and braking.

Depending on the selected recuperation level, the electric motor is operated as an alternator when in overrun mode and during braking in order to charge the high-voltage battery while driving. As soon as you take your foot off the accelerator while driving in transmission position [D] or [R], recuperation starts in overrun mode.

The higher the recuperation, the more sharply the vehicle is braked when coasting and the more electrical energy is fed into the high-voltage battery.

The deceleration in overrun mode may not be sufficient depending on the driving situation. There is no deceleration to a standstill. Also brake with the service brake if necessary. Always adapt your speed to the driving situation and keep sufficient distance.

ⓘ If you brake heavily, the mechanical brake is also used. This means that the maximum recuperation energy cannot be recovered. The more proactively you accelerate and brake, the more efficiently energy can be recuperated.

SYSTEM LIMITS

WITH RECUPERATION IN OVERRUN MODE, THE BRAKING EFFECT OF THE ELECTRIC MOTOR IS ONLY REDUCED OR NON-EXISTENT IN THE FOLLOWING SITUATIONS:

- when the high-voltage battery state of charge increases
- if the high-voltage battery is not yet at a normal operating temperature

MANUALLY SETTING REGENERATIVE DECELERATION

ⓘ The function is only available for a plug-in hybrid.
You can use the steering wheel gearshift paddles to adjust the intensity of recuperation in overrun mode in drive programs H, B and EL in transmission position D.

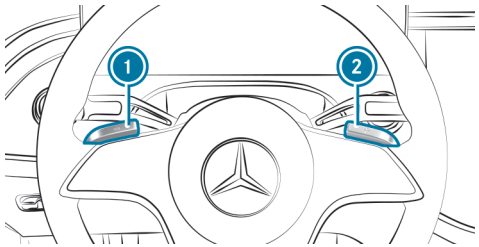

THE FOLLOWING RECUPERATION LEVELS ARE AVAILABLE:

- D AUTO Intelligent, anticipatory recuperation with ECO Assist (⟶ page 343)
- D + No recuperation: the vehicle rolls freely
- D Normal recuperation
- D – Increased recuperation: Strong vehicle deceleration in overrun mode, e.g. for driving downhill

DEFAULT SETTING:

- D AUTO: If the ECO Assist function in the multimedia system is switched on (⟶ page 345).
- D: If the ECO Assist function in the multimedia system is switched off.

ⓘ D AUTO is only available if the ECO Assist function in the multimedia system is switched on and if the function of the radar sensors is not impaired. Please also note the information on the vehicle sensors and cameras (⟶ page 412).

▶ Select transmission position D.

▶ **Increase recuperation:** Pull shift paddle 1 briefly.

- **Reduce recuperation:** Pull shift paddle (2) briefly.
- **Default setting:** Pull and hold shift paddle (1) or (2) re-engage transmission position [D].

ⓘ When the vehicle is started again, the standard setting is also set.

When changing to transmission position [R], the current recuperation level is adopted with the exception of [D] [AUTO]. If [D] [AUTO] was previously selected, the vehicle deceleration of the recuperation level [D] is set in transmission position [R]. With a subsequent change to transmission position [D], the previously selected variable recuperation [D] [AUTO] is set again.

The driver display shows the currently set recuperation level next to the transmission position display.

SETTING RECUPERATIVE DECELERATION MANUALLY (MERCEDES-AMG VEHICLES)

Requirements:

- Drive program [EL] or [B] is selected.
- ESP® is activated – ESP® ON.
- Active Distance Assist DISTRONIC is not activated.

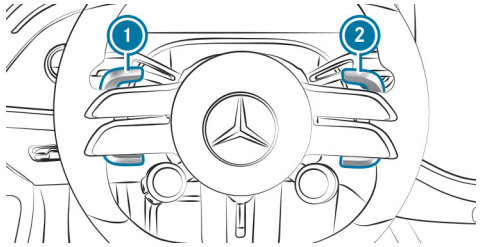

- **Increase recuperation:** Pull shift paddle (1) briefly.
- **Reduce recuperation:** Pull shift paddle (2) briefly.
- **Default setting:** Pull and hold shift paddle (1) or (2) re-engage transmission position [D].

The driver display shows the currently set recuperation level next to the transmission position indicator.

ⓘ Information regarding the recuperation levels (⟶ page 342).

ECO Assist (plug-in hybrid)

ECO ASSIST FUNCTION

ⓘ The following function depends on the equipment and the country and is available only for plug-in hybrids.

ECO Assist analyses data for the vehicle's expected route. This allows the system to help optimally adjust your driving style for the route ahead, save fuel and recuperate. If the system detects an event ahead and the vehicle nears the event, ECO Assist will calculate the optimum speed for maximum fuel economy and recuperative energy based on the distance, speed and downhill gradient.

If the deceleration provided by ECO Assist is not sufficient, you will also need to brake with the service brake. This will be the case particularly if, forexample, you start driving again in slow-moving traffic and the distance to the vehicle in front is very short.

THE FUNCTION WILL BE ACTIVE IN THE FOLLOWING CIRCUMSTANCES:

- The function is activated in the multimedia system (⟶ page 345).
- The D AUTO recuperation level is selected (⟶ page 342).
- Manual shifting M is not activated.
- Drive program S is not selected.

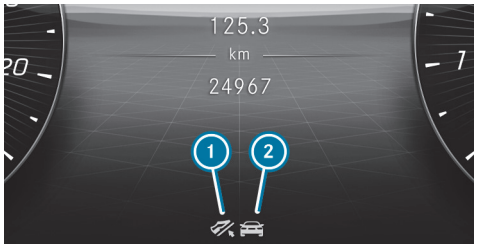

1 "Foot off the accelerator" recommendation
2 Route event ahead

If a route event that you can deal with more efficiently by adjusting your driving style is detected ahead, corresponding symbol 2 and the symbol will be displayed in grey.

If you release the accelerator pedal, the symbol will turn green and recuperation in overrun mode will be initiated. If the deceleration is not sufficient, also apply the service brake.

If ECO Assist intervenes for a route event ahead and you press the accelerator pedal, you will end control by ECO Assist. This does not apply in the case of a vehicle in front.

THE ECO ASSIST DISPLAY WILL BE HIDDEN AGAIN IN THE FOLLOWING CASES:

- You do not react to the ECO Assist recommendation for a long time.
- You depress the accelerator pedal while ECO Assist is intervening because of a route event ahead. This does not apply in the case of a vehicle in front.
- ECO Assist cannot identify any further recommendations from the route ahead.

IN ADDITION TO A VEHICLE IN FRONT , ECO ASSIST CAN DETECT THE FOLLOWING ROUTE EVENTS 2 DEPENDING ON THE VEHICLE'S EQUIPMENT:

- Roundabout
- Sharp bend
- Junction
- T-junction
- Downhill gradient
- km/h Speed limit

SYSTEM LIMITS

If the calculated route is adhered to when route guidance is active, ECO Assist will operate with greater accuracy. The basic function is also available when route guidance is not active. Not all information and traffic situations can be foreseen. The quality depends on the map data.

ECO Assist is only an aid. The driver is responsible for keeping a safe distance from the vehicle in front, for vehicle speed and for braking in good time.

THE SYSTEM MAY BE IMPAIRED OR MAY NOT FUNCTION IN THE FOLLOWING SITUATIONS:

- if there is poor visibility, e.g. owing to insufficient illumination of the road, highly variable shade conditions, rain, snow, fog or heavy spray
- if there is glare, e.g. from oncoming traffic, direct sunlight or reflections
- if the windscreen is dirty in the vicinity of the multifunction camera
- if the multifunction camera is misted up, damaged or obscured
- if road signs are hard to detect (e.g. due to dirt, snow or insufficient lighting) or because they are obscured
- if the digital road map of the navigation system has incorrect or outdated information
- if signs are ambiguous (e.g. road signs in roadworks or in adjacent lanes)
- if the radar sensors are dirty or obscured
- when you drive on roads with steep gradients
- if there are narrow vehicles in front, such as bicycles or motorcycles

ACTIVATING AND DEACTIVATING ECO ASSIST

Multimedia system:

Settings » Assistance » Driving

▶ Activate or deactivate the function.

Function of the route-based operating-mode strategy (plug-in hybrid)

ⓘ The following function is country-dependent and available only in conjunction with an integrated navigation system.

THE ROUTE-BASED OPERATING-MODE STRATEGY WILL BE ACTIVE IN THE FOLLOWING CIRCUMSTANCES:

- Drive program H is selected .
- The Route-based option is selected for drive program H on the DYNAMIC SELECT menu (⟶ page 353).
- Route guidance is active.
- The state of charge of the high-voltage battery is sufficient.

When the function is active, data on the further course of the route will be analysed. This includes e.g. road type, speed limits and elevation data.

THE HYBRID SYSTEM WILL THEN ADAPT THE OPERATING STRATEGY TO THE FURTHER COURSE OF THE ROUTE:

- Use of electrical energy and the combustion engine will be adapted.
- The state of charge of the high-voltage battery will be controlled accordingly.
- Electrical energy will be reserved especially for electric mode, e.g. urban route sections or areas with low emission zones.
- The vehicle will automatically select the operating mode.

Function of the haptic accelerator pedal (plug-in hybrid)

The haptic accelerator pedal has an additional point of resistance followed by increased pedal resistance to help you drive in all-electric mode.

CHARACTERISTICS OF THE ADDITIONAL POINT OF RESISTANCE:

- Available only in drive program EL

- Is used when the power availability display (POWER) of the electric drive system in the power meter is full (⟶ page 537, 538)
- Indicates the maximum available electric performance

  The subsequent increased pedal resistance indicates continued travel with the combustion engine.

AMG Real Performance Sound

SELECTING A SOUND CHARACTERISTIC WITH THE AMG STEERING WHEEL BUTTON

ⓘ You can select a comfortable (Balanced) or a sporty (Powerful) sound characteristic using the steering-wheel button or the multimedia system (⟶ page 354).

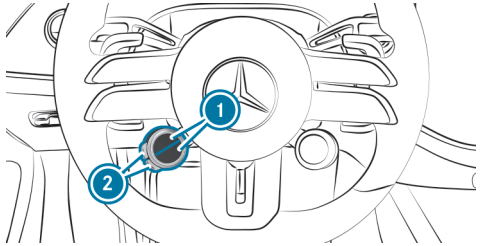

► Press the upper or lower display button 1 repeatedly until it displays the symbol.

ⓘ If the display button does not show the symbol, then it is hidden. How functions are displayed and the order in which they are displayed can be set in the multimedia system (⟶ page 347).

► Press corresponding button 2.

THE COLOUR OF THE BUTTON SYMBOL INDICATES THE CURRENTLY SELECTED SOUND CHARACTERISTIC:

- **Blue:** Balanced – comfortable
- **Red:** Powerful – sporty

ⓘ Only in the sporty sound characteristic (Powerful) does the vehicle also produce a stationary noise and speed-dependent driving noises up to approx. 100 km/h.

Function of the AMG steering wheel buttons

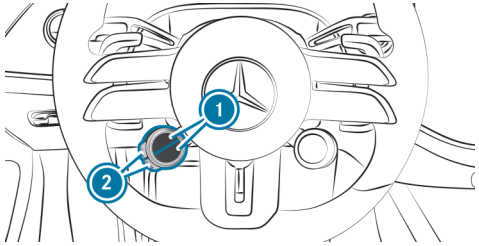

The AMG steering wheel buttons are an additional control element with two buttons on the steering wheel.

You can assign two vehicle functions of your choice to the control element. You can change between the available functions for corresponding button 1 by pressing the upper or lower part of display buttons 2 repeatedly. Display buttons 1 show each function selected.

THE FOLLOWING FUNCTIONS ARE AVAILABLE DEPENDING ON THE EQUIPMENT:

- ESP® (⟶ page 416)
- AMG RIDE CONTROL (⟶ page 468)
- Manual shifting (⟶ page 362)
- AMG Real Performance Sound (⟶ page 346)
- Camera views (⟶ page 473)
- AMG DYNAMICS (⟶ page 351)

ⓘ Individual functions may be hidden. How functions are displayed and the order in which they are displayed can be set in the multimedia system (⟶ page 347).

If you have assigned a specific function to one of display buttons ①, you can operate this function with corresponding button ②.

The assignment of display buttons ① remains stored even after a vehicle restart. But the operating status of the respective function is reset to the basic setting.

Setting the AMG steering wheel buttons

Multimedia system:

Settings » System » Control elements » AMG steering-wheel buttons

OVERVIEW OF THE AMG SETTINGS SELECT MENU

The left display buttons on the steering wheel can be set in the SETTINGS SELECT menu.



(Example of representation) Representation and arrangement of content equipment-dependent.

① Selection area for the available functions
② Adjustable steering wheel buttons
③ Calls up setting mode

► Select the appropriate steering wheel button.

SETTING THE STEERING WHEEL BUTTON

ⓘ The SETTINGS SELECT menu can also be called up using the AMG button in the centre console or by pressing and holding the respective display button.

► Select the upper or lower display button in the central display.

- Press [✎] and select the desired function for assignment from (1).

ADDING NEW FUNCTIONS FOR SELECTION

- Select the upper or lower display button in the central display.
- Press [+] in selection area (1) and select the desired function from the list.

  The selected function is assigned to selection area (1) and can be selected from there for the steering wheel buttons.

DELETING BUTTON ASSIGNMENT

- Select the upper or lower display button in the central display.
- Press [✎].
- Press [⊗] at the desired function to delete the selected assignment of the display button.

DYNAMIC SELECT

Function of DYNAMIC SELECT

DYNAMIC SELECT allows a drive program to be selected quickly according to the current driving conditions or the desired vehicle characteristics. You will be able to select the following drive programs.

ⓘ Depending on the engine line-up and equipment, the vehicle will have different drive programs.

The drive program selected will appear on the driver display.

I* INDIVIDUAL

- Custom settings (⟶ page 353)

S SPORT

- Maximum output is available
- Sporty driving
- Sporty, but with an emphasis on stability
- Enables a sporty driver to adopt a more active driving style
- Driving with the combustion engine and reinforced boost effect (plug-in hybrid)
- Suitable only for good road conditions, a dry surface and a clear stretch of road
- **Vehicles with AIRMATIC:** lowers the vehicle to low level -1

H HYBRID **(PLUG-IN HYBRID)**

- Comfortable and economical driving
- Balance between traction and stability
- Recommended for all road conditions
- Full development of all intelligent hybrid functions
- Adjustable recuperation in overrun mode
- The selection of the appropriate drive type by the hybrid system depends on the driving conditions and the route
- **Vehicles with AIRMATIC:**
  - Adjusts the vehicle to normal level
  - From approximately 120 km/h: lowers the vehicle to low level -1
  - Below approximately 80 km/h: raises the vehicle to normal level

C COMFORT

- Comfortable and economical driving
- Balance between traction and stability
- Recommended for all road conditions
- **Vehicles with AIRMATIC:**
  - Adjusts the vehicle to normal level
  - From approximately 120 km/h: lowers the vehicle to low level -1

- Below approximately 80 km/h: raises the vehicle to normal level

EL ELECTRIC **(PLUG-IN HYBRID)**

- Electric mode – driving without the combustion engine is possible up to approximately 140 km/h
- Adjustable recuperation in overrun mode
- Adaptation of Active Distance Assist DISTRONIC for electric mode
- Depending on the equipment, the maximum set speed for cruise control, the limiter and Active Distance Assist DISTRONIC can be limited to the maximum speed possible in electric mode
- Activation of the combustion engine via the pressure point of the accelerator pedal (kickdown)
- **Vehicles with AIRMATIC:**
  - Adjusts the vehicle to normal level
  - From approximately 120 km/h: lowers the vehicle to low level -1
  - Below approximately 80 km/h: raises the vehicle to normal level

B BATTERY HOLD **(PLUG-IN HYBRID)**

- Prioritises maintaining the state of charge of the high-voltage battery, e.g. for subsequent journeys in inner cities/low-emission zones
- The selection of the appropriate drive type by the hybrid system depends on the driving conditions and the route
- Adjustable recuperation in overrun mode
- **Vehicles with AIRMATIC:**
  - Adjusts the vehicle to normal level
  - From approximately 120 km/h: lowers the vehicle to low level -1
  - Below approximately 80 km/h: raises the vehicle to normal level

E ECO

- Particularly economical driving
- Balance between traction and stability
- Recommended for all road conditions
- **Vehicles with AIRMATIC:** lowers the vehicle to low level -1

ⓘ The ESP® settings in the E and C drive programs are designed for stability. Therefore, choose one of these drive programs especially when transporting roof loads, in trailer operation and when the vehicle is fully laden or fully occupied.
Plug-in hybrid: this also applies to drive programs H, EL and B.

ⓘ **Plug-in hybrid with diesel particulate filter:** during regeneration of the diesel particulate filter, drive programs may be unavailable or restricted and the state of charge of the high-voltage battery may change.

ⓘ **Vehicles with AIRMATIC:** below approximately 60 km/h, you can also manually raise the vehicle to off-road level +1 in any drive program (⟶ page 467).

DEPENDING ON THE DRIVE PROGRAM, THE FOLLOWING SYSTEMS WILL CHANGE THEIR CHARACTERISTICS:

- Drive
  - Engine and transmission management
  - Active Distance Assist DISTRONIC

  - Availability of gliding mode
- ESP®
- **Vehicles with AIRMATIC:** suspension
  - Suspension and damping
  - Vehicle level
- Steering
- Sound characteristics of the engine in the vehicle interior (equipment-dependent)

Function of DYNAMIC SELECT (Mercedes-AMG vehicles)

DYNAMIC SELECT allows a drive program to be selected quickly according to the current driving conditions or the desired vehicle characteristics.

YOU CAN SELECT THE FOLLOWING DRIVE PROGRAMS:

- Slippery
  - Optimised pulling-away and driving characteristics in wintry and slippery road conditions
  - The hybrid system will select the appropriate drive type depending on the driving conditions
- B Battery Hold
  - Prioritises maintaining the state of charge of the high-voltage battery, e.g. for subsequent journeys in inner cities/low-emission zones
  - The hybrid system will select the appropriate drive type depending on the driving conditions
- EL Electric
  - Electric mode: driving without the combustion engine is possible up to approximately 140 km/h.
  - Limits the maximum set speed for the limiter and Active Distance Assist DISTRONIC to the maximum speed possible in electric mode
  - Activates the combustion engine via the first point of resistance of the haptic accelerator pedal
- C Comfort
  - Comfortable and economical driving
  - The hybrid system will select the appropriate drive type depending on the driving conditions
- I* Individual
  - Custom settings for drive system, transmission, AMG DYNAMICS, suspension and sound
- S Sport
  - Sporty driving
  - Balance between stability and sportiness
  - Driving using the combustion engine and reinforced boost effect
  - Suitable only for good road conditions, a dry surface and a clear stretch of road
- S+ Sport+
  - Particularly sporty driving
  - Emphasises the vehicle's own oversteer and understeer characteristics
  - Driving using the combustion engine and reinforced boost effect
  - Suitable only for good road conditions, a dry surface and a clear stretch of road

Mercedes-AMG recommends selecting drive program C or EL when in city traffic or stop-and-go traffic.

DEPENDING ON THE DRIVE PROGRAM SELECTED, THE FOLLOWING VEHICLE CHARACTERISTICS WILL CHANGE:

- Drive
  - Energy supply for the electric drive output
- AMG DYNAMICS
  - The three agility functions, Basic, Advanced and Pro, will be selected automatically depending on the drive program.
  - The steering, shift timing point, all-wheel drive and stabilisation functions will be adapted to the selected drive program.
- Real Performance Sound
- Sound of the drive system in the vehicle interior
- Suspension
- Steering

ⓘ You can set the drive program characteristics using the multimedia system (⟶ page 354).

ⓘ You can adjust the agility functions of AMG DYNAMICS using the AMG steering-wheel buttons.

Selecting a drive program

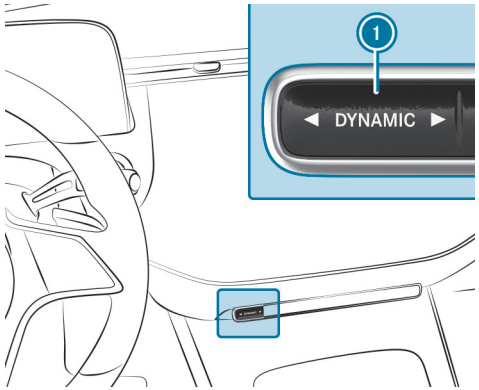

► Press DYNAMIC SELECT button (1) on the left or right.

The drive program selected will appear on the driver display.

Selecting a drive program (Mercedes-AMG vehicles)

SELECTION WITH THE RIGHT-HAND AMG STEERING-WHEEL BUTTON

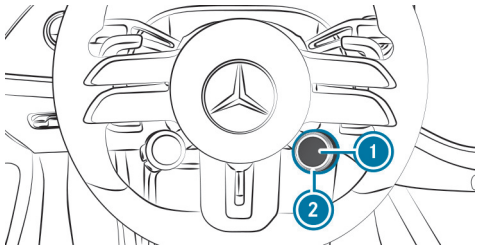

► Turn rotary switch (2).

The selected drive program will appear on display button (1) and on the driver display.

Individual drive programs may not be shown. How drive programs are displayed and the order in which they are displayed can be set in the multimedia system (⟶ page 354).

SELECTION VIA THE CENTRAL DISPLAY (MULTIMEDIA SYSTEM)

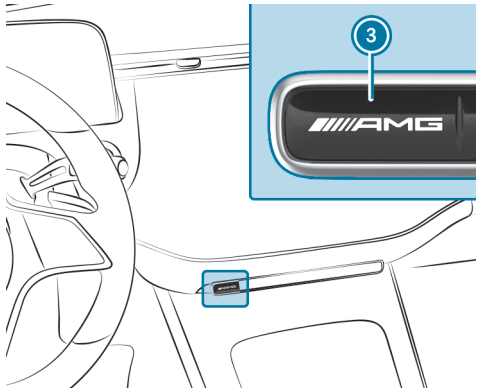

- Press button (3) and select the drive program via the central display (⟶ page 354).

Configuring DYNAMIC SELECT in the multimedia system

Multimedia system:

Settings » Vehicle » DYNAMIC SELECT

SETTING THE I DRIVE PROGRAM

- Select I* Individual.
- Select and set a category.

A sporty ESP mode can be set in conjunction with a sporty suspension mode.

SETTING THE H DRIVE PROGRAM (PLUG-IN HYBRID)

- Select Hybrid.
- Select Route-based or Standard.

  If route guidance is active and the Route-based option has been activated, the electrical energy is distributed intelligently over the entire route. In built-up areas, electric mode is preferred, while on the motorway the combustion engine is used.

  With the Standard option, the vehicle drives in its standard drive program (EL Electric or H Hybrid). There is no distribution of electrical energy over the entire route. The high-voltage battery is exhausted and the vehicle is then driven by the combustion engine.

Displaying vehicle data

Multimedia system:

Info

- Select Vehicle.

  The vehicle data is displayed.

Displaying engine data

Multimedia system:

Info

- Select Engine.

  The engine data is displayed.

The actual (maximum) values that can be achieved for engine output and engine torque may deviate from the certified values within the country-specific guidelines for permissible tolerances (basis: UN-ECE No. 85 or country-specific guidelines).

INFLUENCING VARIABLES INCLUDE:

- Sea level
- Fuel quality
- Outside temperature
- Operating temperature of the engine

Adjust your driving style accordingly.
The warning lamp in the driver display is on until the engine has reached operating temperature.

The values displayed serve only as guidance. The values for engine output and engine torque shown on the central display may deviate from the actual values.

The warning lamp to show the power output limitation after starting the vehicle is not available in all vehicle models.

Setting AMG DYNAMIC SELECT in the MBUX multimedia system

Multimedia system:

Settings » Vehicle » DYNAMIC SELECT

SETTING THE INDIVIDUAL DRIVE PROGRAM USING THE MULTIMEDIA SYSTEM

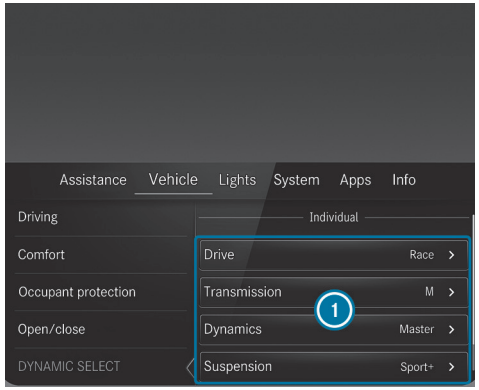

(Example of representation) Representation and arrangement of content equipment-dependent.

1 Drive program settings

► Select the appropriate setting option.

SETTING DRIVE PROGRAMS USING THE AMG BUTTON

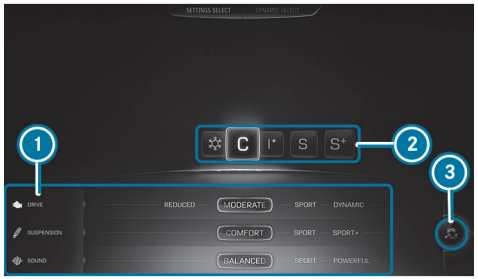

(Example of representation) Representation and arrangement of content equipment-dependent.

1. AMG drive program settings
2. Drive programs
3. ESP® (⟶ page 416)

► Press the AMG button in the centre console.

► Select I* Individual.

► Select and set a category.

ⓘ A sporty ESP mode can be set in conjunction with a sporty suspension mode.

SETTING OPTIONS FOR THE DRIVE PROGRAMS (EQUIPMENT-DEPENDENT):

- AMG DYNAMICS:
  Basic/Advanced/Pro
- Suspension:
  Comfort/Sport/Sport+
- Sound:
  Balanced/Powerful
- Drive (can only be set in the I* Individual drive program):
  Reduced/Moderate/Sport/Dynamic
- Transmission:
  M/D

The settings of the drive programs can be adjusted individually. The setting mode for the drive programs can also be called up by pressing and holding the current configuration in selection area 2.

FURTHER SETTING OPTIONS

- Setting ESP®

Automatic transmission

DIRECT SELECT lever

FUNCTION OF THE DIRECT SELECT LEVER

WARNING
Risk of accident due to incorrect gearshifting

If the engine speed is higher than the idle speed and you engage the transmission position D or R, the vehicle may accelerate sharply.

- ► If you engage the transmission position D or R when the vehicle is at a standstill, always depress the brake pedal firmly and do not accelerate at the same time.

WARNING
Accident- and risk of injury with unsupervised children in the vehicle

IF YOU LEAVE CHILDREN UNATTENDED IN THE VEHICLE, THEY CAN IN PARTICULAR

- Open doors and thereby endanger other persons or road users.
- get out of the car and are hit by traffic.
- Operate vehicle equipment and become trapped, forexample.

IN ADDITION, THE CHILDREN COULD ALSO SET THE VEHICLE IN MOTION, FOR EXAMPLEBY:

- releasing the parking brake.
- change the gearbox setting.
- start the vehicle.

- ► Never leave children unattended in the vehicle.
- ► When leaving the vehicle, always take the SmartKey with you and lock the vehicle.
- ► Keep the key out of reach of children.

This also applies to the Digital Vehicle Key.

WARNING
Risk of accident and injury when the transmission position is not engaged

The current transmission position will be highlighted on the driver's display.

If the selected transmission position is not highlighted, the vehicle may pull away in the wrong direction or roll away.

- ► After changing the transmission position, always check the transmission position display on the driver's display.

If the transmission position is not highlighted on the driver's display even after a short time:

- ► Pay attention to the display messages.
- ► Pull away carefully and check the engaged transmission position.
- ► When parking, engage the parking brake and secure the vehicle against rolling away.
- ► Have the transmission checked immediately at a qualified specialist workshop.

Use the DIRECT SELECT lever to switch the transmission position. The current transmission position will be highlighted on the driver display.

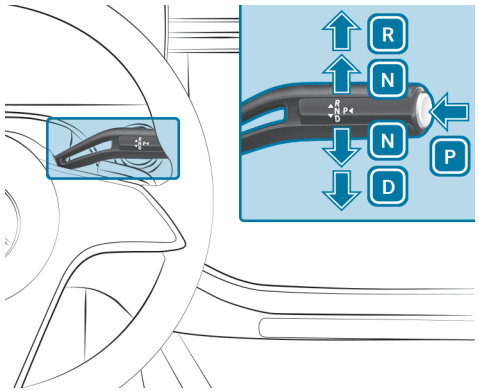

P Park position
R Reverse gear
N Neutral
D Drive position

ENGAGING REVERSE GEAR R

WARNING
Risk of accident due to incorrect gearshifting

If the engine speed is higher than the idle speed and you engage the transmission position D or R, the vehicle may accelerate sharply.

- ► If you engage the transmission position D or R when the vehicle is at a standstill, always depress the brake pedal firmly and do not accelerate at the same time.

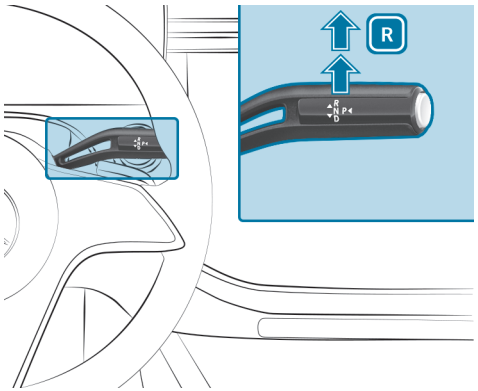

- Depress the brake pedal and push the DIRECT SELECT lever upwards past the first point of resistance.

ENGAGING NEUTRAL N

WARNING
Risk of accident due to incorrect gearshifting

If the engine speed is higher than the idle speed and you engage the transmission position D or R, the vehicle may accelerate sharply.

- If you engage the transmission position D or R when the vehicle is at a standstill, always depress the brake pedal firmly and do not accelerate at the same time.

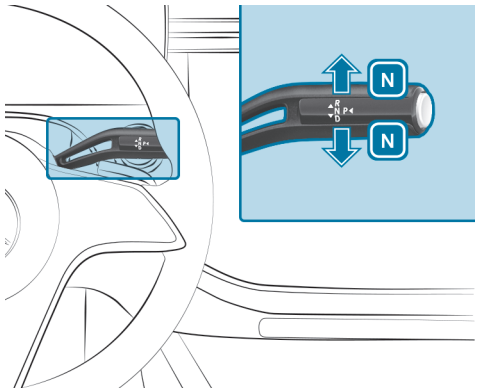

- Depress the brake pedal and push the DIRECT SELECT lever up or down to the first point of resistance.

To shift into neutral N with the vehicle switched on, push the selector lever up or down for several seconds to the first point of resistance.

Subsequently releasing the brake pedal will allow you to move the vehicle freely, e.g. to push it or tow it away.

PROCEED AS FOLLOWS IF YOU WANT THE AUTOMATIC TRANSMISSION TO REMAIN IN NEUTRAL N, EVEN IF THE VEHICLE IS SWITCHED OFF OR THE DRIVER'S DOOR IS OPENED:

- Depress the brake pedal and engage neutral N when the vehicle is at a standstill.
- Release the brake pedal.
- Switch off the vehicle.

The Risk of vehicle rolling away N activated manually No automatic switch to P message will appear on the driver display.

If you then exit the vehicle leaving the key in the vehicle, the automatic transmission will remain in neutral [N].
Vehicles with Digital Vehicle Key: Make sure that a vehicle key or Digital Vehicle Key is in the vehicle and that the automatic transmission remains in neutral [N].

IF THE AUTOMATIC TRANSMISSION DOES NOT STAY IN NEUTRAL [N]:

- Restart the vehicle and repeat the procedure.

PARK POSITION [P] WILL AUTOMATICALLY BE RE-ENGAGED AS SOON AS ONE OF THE FOLLOWING CONDITIONS IS MET:

- You switch to transmission position [D] or [R].
- You press the button [P].

ENGAGING PARK POSITION P

WARNING
Accident- and risk of injury with unsupervised children in the vehicle

IF YOU LEAVE CHILDREN UNATTENDED IN THE VEHICLE, THEY CAN IN PARTICULAR

- Open doors and thereby endanger other persons or road users.
- get out of the car and are hit by traffic.
- Operate vehicle equipment and become trapped, forexample.

IN ADDITION, THE CHILDREN COULD ALSO SET THE VEHICLE IN MOTION, FOR EXAMPLEBY:

- releasing the parking brake.
- change the gearbox setting.
- start the vehicle.

► Never leave children unattended in the vehicle.

► When leaving the vehicle, always take the SmartKey with you and lock the vehicle.

► Keep the key out of reach of children.

This also applies to the Digital Vehicle Key.

NOTE
Damage due to engaging park position P while the vehicle is rolling

If you shift the transmission into park position P while the vehicle is rolling, the transmission may be damaged.

- If the vehicle is rolling, do not open a door.
- Only engage the park position P when the vehicle is stationary.

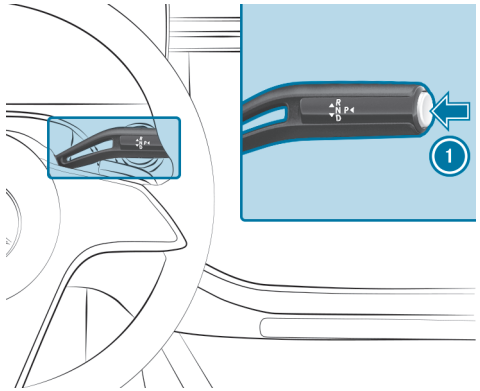

- Observe the notes on parking the vehicle (→ page 399).
- Depress the brake pedal until the vehicle comes to a standstill.
- When the vehicle is stationary, press the button 1.
  When the transmission position display P is shown, park position is engaged. If the transmission position display P is not shown, apply the parking brake and secure the vehicle to prevent it from rolling away.

Depending on the respective situation, it may take a short while before P engages. Therefore, always pay attention to the transmission position display.

PARK POSITION P WILL BE ENGAGED AUTOMATICALLY IF ONE OF THE FOLLOWING CONDITIONS IS MET:

- You switch the stationary vehicle off in transmission position D or R.
- You open the driver's door when the vehicle is stationary in transmission position D or R.
- When the vehicle is rolling, you switch it off in transmission position D or R and slow it to a standstill.
- When the vehicle is rolling, you shift to transmission position N, slow the vehicle to a standstill and open the driver's door when the vehicle is stationary.
- Automatic engagement of park position P is required for the vehicle.

To manoeuvre with the driver's door open, open the driver's door while the vehicle is stationary and engage transmission position D or R again.

ENGAGING DRIVE POSITION D

> **WARNING**
> Risk of accident due to incorrect gearshifting
>
> If the engine speed is higher than the idle speed and you engage the transmission position D or R, the vehicle may accelerate sharply.
>
> ► If you engage the transmission position D or R when the vehicle is at a standstill, always depress the brake pedal firmly and do not accelerate at the same time.

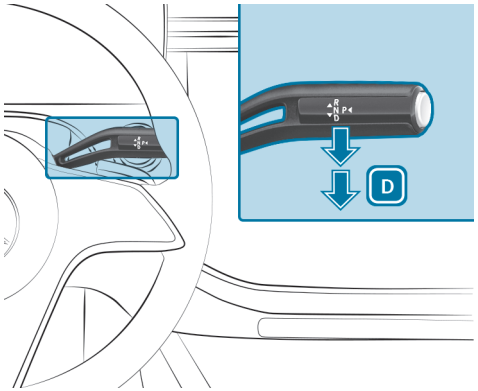

► Depress the brake pedal and push the DIRECT SELECT lever down past the first point of resistance.

WHEN THE AUTOMATIC TRANSMISSION IS IN TRANSMISSION POSITION D, IT WILL SHIFT GEARS AUTOMATICALLY. THIS DEPENDS, AMONG OTHER THINGS, ON THE FOLLOWING FACTORS:

- The selected drive program
- The position of the accelerator pedal
- The vehicle speed

Rocking the vehicle free (Mercedes-AMG vehicles)

Rocking the vehicle free may help to free the vehicle if it has become stuck in slush or snow.

To rock the vehicle free, move the DIRECT SELECT lever upwards and downwards past the point of resistance to switch between transmission positions D and R.

ⓘ The maximum speed for rocking the vehicle free is approximately 9 km/h.

Manual shifting

ⓘ For plug-in hybrids, observe the information on the regenerative brake system (⟶ page 341).

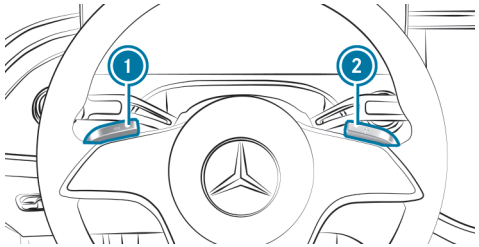

When the automatic transmission is shifted to position D, you can shift it manually with the steering wheel gearshift paddles. If permitted, the automatic transmission will shift to a higher or lower gear depending on the steering wheel gearshift paddle pulled.

YOU HAVE TWO OPTIONS FOR MANUALLY SHIFTING THE AUTOMATIC TRANSMISSION:

- Temporary setting
- Permanent setting

The gears will shift automatically when manual shifting is deactivated.

Temporary setting:

► **To activate:** pull steering wheel gearshift paddle (1) or (2).
Manual shifting will be activated for a short time. The transmission position display will show M and the current gear.

ⓘ For how long manual shifting stays activated depends on various factors.

MANUAL SHIFTING CAN BE DEACTIVATED AUTOMATICALLY IN THE FOLLOWING CASES:

- When the drive program is changed
- When the vehicle is restarted
- When transmission position D is engaged again
- Driving style

► **To shift up:** pull the steering wheel gearshift paddle (2).

► **To shift down:** pull the steering wheel gearshift paddle (1).

► **To deactivate:** pull and hold the steering wheel gearshift paddle (2).
The transmission position display will show D.

ⓘ You can activate or deactivate manual shifting permanently in the multimedia system.

Manual shifting (Mercedes-AMG vehicles)

ⓘ You can also permanently activate and deactivate manual gearshifting via the multimedia system (⟶ page 354).

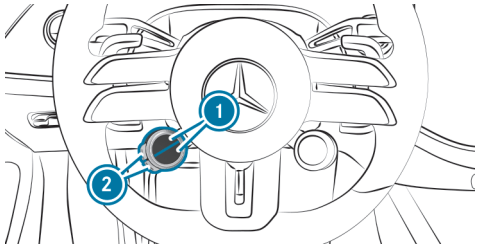

► Press upper or lower display button (1) repeatedly until it displays the AMG D or AMG M symbol.

ⓘ If the display button does not show the symbol, then it is hidden. How functions are displayed and the order in which they are displayed can be set in the multimedia system (⟶ page 347).

► **To activate/deactivate:** press the corresponding button (2).

THE SYMBOL INDICATES THE CURRENTLY SELECTED TRANSMISSION POSITION:

- AMG M (red): manual shifting
- AMG D (blue): automatic transmission

Automatic transmission must be selected for electric mode. If you select manual mode in drive program EL, the drive program will change to C and the combustion engine will start. If you are driving in electric mode in drive program B or C and select manual mode, the combustion engine will start.

SHIFTING UP AND DOWN
Requirements

- Drive program EL or B is not selected.

> **NOTE**
> Damage to the engine due to shifting up too late
>
> The automatic transmission does not shift up in manual mode even when the engine's limiting speed is reached.
>
> The fuel supply is interrupted in order to prevent the engine from overrevving.
>
> ► Shift up before the engine speed reaches the red area in the rev counter.

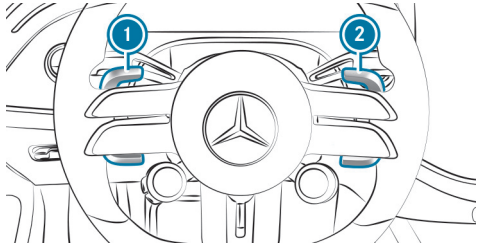

► **To shift up:** pull steering wheel gearshift paddle 2.

► **To shift down:** pull steering wheel gearshift paddle 1.

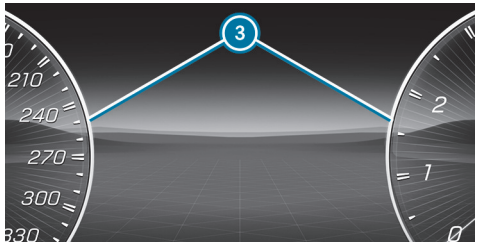

If the engine speed is too high or too low, you will not be able to change gear using the steering wheel gearshift paddles. In this case, segments 3 will light up red on the driver's display.

Permanently activating/deactivating manual shifting

Multimedia system:

Settings >> Vehicle >> Driving

► Permanently activate or deactivate the function.

Gearshift recommendation

When manual gearshifting is activated, gearshift recommendation will assist you in adopting an economical driving style.



- When gearshift recommendation (1) appears on the driver's display, shift to the recommended gear.

Using kickdown

- **Maximum acceleration:** depress the accelerator pedal beyond the point of resistance.

To protect against engine overrev, the automatic transmission will shift up to the next gear when maximum engine speed has been reached.

Gliding mode function

Gliding mode helps you to reduce fuel consumption when you employ an anticipatory driving style.

GLIDING MODE IS CHARACTERISED BY THE FOLLOWING:

- The combustion engine is switched off depending on the driving situation. All the vehicle functions will remain active.
- The transmission position display D is shown in green.

GLIDING MODE WILL BE ACTIVATED IF THE FOLLOWING CONDITIONS ARE MET:

- The ECO start/stop function is switched on.
- Drive program E is selected.
- The speed is within a suitable range.
- The road's course is suitable, e.g. no steep inclines or tight bends.
- There is no trailer coupled to the trailer hitch and no bicycle rack fitted.
- The state of charge of the battery is sufficient.
- You do not depress the accelerator or brake pedal (except for light brake applications).

Gliding mode can also be activated if you have selected the "Eco" setting for the drive in drive program .

Gliding mode will be deactivated again if one of the conditions is no longer met.

GLIDING MODE CAN ALSO BE PREVENTED BY THE FOLLOWING PARAMETERS:

- Incline
- Downhill gradient
- Temperature
- Height
- Speed
- Operating status of the engine
- Traffic situation

Function of 4MATIC

4MATIC ensures that all four wheels are driven. Together with ESP® and 4ETS, 4MATIC improves the traction of your vehicle whenever a driven wheel spins due to insufficient traction.

If you fail to adapt your driving style, 4MATIC can neither reduce the risk of an accident nor override the laws of physics. 4MATIC cannot take account of road, weather and traffic conditions. 4MATIC is only an aid. You are responsible in particular for maintaining a safe distance from the vehicle in front, for vehicle speed, for braking in good time and for staying in lane.

In wintry road conditions, the maximum effect of 4MATIC can be achieved only if you use winter tyres (M+S tyres), with snow chains if necessary.

Refuelling

Refuelling the vehicle

WARNING
Risk of fire or explosion from fuel

Fuels are highly flammable.

- Fire, naked flames, smoking and creating sparks must be avoided.
- Before refuelling, switch off the vehicle and, if fitted, the stationary heater and keep switched off during filling.

WARNING
Risk of injury from fuels

Fuels are poisonous and hazardous to your health.

- Do not swallow fuel or let it come into contact with skin, eyes or clothing.
- Do not inhale fuel vapour.
- Keep children away from fuel.
- Keep doors and windows closed during the refuelling process.

If you or other people come into contact with fuel, observe the following:

- Immediately rinse fuel off your skin with soap and water.
- If fuel comes into contact with your eyes, immediately rinse them thoroughly with clean water. Seek medical attention immediately.
- If you swallow fuel, seek medical attention immediately. Do not induce vomiting.
- Change immediately out of clothing that has come into contact with fuel.

WARNING
Risk of fire and explosion due to electrostatic charge

Electrostatic charge can ignite fuel vapour.

- ► Before you open the fuel filler cap or take hold of the pump nozzle, touch the metallic vehicle body.
- ► To avoid creating another electrostatic charge, do not get into the vehicle again during the refuelling process.

WARNING
Risk of fire from fuel mixture

Vehicles with a diesel engine:

If you mix diesel fuel with petrol, the flash point of the fuel mixture is lower than that of pure diesel fuel.

While the vehicle is running, component parts in the exhaust system may overheat without warning.

- ► Never refuel using petrol.
- ► Never mix petrol with diesel fuel.

NOTE
Damage caused by the wrong fuel

Vehicles with a petrol engine:

Even small amounts of the wrong fuel could result in damage to the fuel system, the engine and the emission control system.

- ► Refuel only with unleaded, sulphur-free spark-ignition engine fuel.

Petrol can contain up to 25 Vol.-% ethanol by volume.

- ► See the information label in fuel filler flap for compatible fuels.

Further information about compatible fuels can be obtained at a qualified specialist workshop.

Throughout Europe you can also find the compatibility labels on the fuel pump or pump nozzle suitable for your vehicle.

NEVER REFUEL WITH ANY OF THE FOLLOWING FUELS:

- Diesel
- Regular petrol with an octane number lower than 91 RON
- Petrol with more than 3% methanol by volume, e.g. M15, M30
- Petrol with metallic additives

If you have accidentally refuelled with the wrong fuel:

- ► Do not switch on the vehicle.

- Consult a qualified specialist workshop.

NOTE
Damage caused by the wrong fuel

Vehicles with a diesel engine:

Even small amounts of the wrong fuel could result in damage to the fuel system, the engine and the emission control system.

Vehicles with diesel particulate filters:

- Refuel using only sulphur-free diesel fuel.
  In countries without sulphur-free diesel fuel, refuel using only low-sulphur diesel fuel with a sulphur content of less than 50 ppm.

Vehicles without diesel particulate filters:

- Refuel using only diesel fuel with a sulphur content of less than 500 ppm.

NEVER REFUEL WITH ANY OF THE FOLLOWING FUELS:

- Petrol
- Marine diesel
- Heating oil
- Pure fatty acid methyl ester or vegetable oil
- Paraffin or kerosene

If you have accidentally refuelled with the wrong fuel:

- Do not switch on the vehicle.

► Consult a qualified specialist workshop.

NOTE
Shorter maintenance intervals due to fuel with increased bio-contents

When fuels with increased bio-contents are used, fuel residues with increased separation volume may occur. If fuels with increased bio-contents (compatibility marks B10 and B20) are used on an ongoing basis, this may lead to shorter maintenance intervals for the fuel filter.

If the vehicle is not used for an extended period of time (several weeks):

► Refuel the vehicle beforehand with diesel fuel with bio-contents < 10% to avoid possible deposits of bio-contents in the fuel tank.

NOTE
Do not use diesel to refuel vehicles with a petrol engine

IF YOU HAVE ACCIDENTALLY REFUELLED WITH THE WRONG FUEL:

- Do not switch on the vehicle. Otherwise fuel can enter the engine.
  Even small amounts of the wrong fuel could result in damage to the fuel system and the engine. The repair costs are high.

► Consult a qualified specialist workshop.

► Have the fuel tank and fuel lines drained completely.

NOTE
Do not refuel diesel-engined vehicles with petrol

IF YOU HAVE ACCIDENTALLY REFUELLED WITH THE WRONG FUEL:

- Do not switch on the vehicle. Otherwise fuel can enter the engine.
  Even small amounts of the wrong fuel could result in damage to the fuel system and the engine. The repair costs are high.

► Consult a qualified specialist workshop.

► Have the fuel tank and fuel lines drained completely.

NOTE
Damage to the fuel system due to overfilling the fuel tank

► Only fill the fuel tank until the pump nozzle switches off.

If too much fuel has been added due, for example, to a faulty filling pump:

► Do not switch on the vehicle.

► Consult a qualified specialist workshop.

NOTE
Fuel may spray out when you remove the fuel pump nozzle

► Only fill the fuel tank until the pump nozzle switches off.

Requirements:

- The vehicle is unlocked.
- **Plug-in hybrid with petrol engine:** the fuel tank was vented before refuelling (⟶ page 371).

Observe the notes on operating fluids and fuel.

The recommended octane number for your vehicle can be found on the information label on the inside of the fuel filler flap.

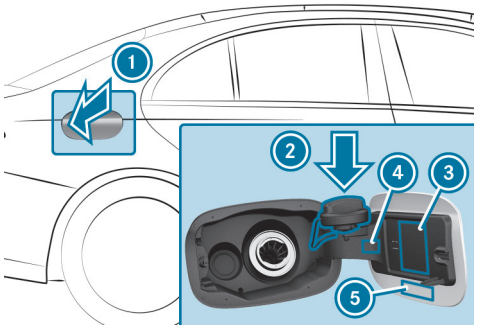

1. Fuel filler flap
2. Bracket for the fuel filler cap
3. Tyre pressure table
4. QR code for rescue card
5. Fuel type

ⓘ **Plug-in hybrid with petrol engine:** the fuel filler flap opens automatically after the fuel tank has been vented (⟶ page 371).

- Press on the centre rear of fuel filler flap (1).
- Turn the fuel filler cap counter-clockwise and remove it.
- Insert fuel filler cap from above into bracket (2).
- Completely insert the pump nozzle into the tank filler neck, hook in place and refuel.
- Only fill the fuel tank until the pump nozzle switches off.

ⓘ **Vehicles with diesel engine:** The tank filler neck is designed for refuelling at diesel filling pumps.
In order to prevent incorrect fuel from being filled, your vehicle is equipped with an incorrect fuelling protector. This function may be deactivated in some countries due to local conditions. For more information, consult a Mercedes-Benz Service Centre.

ⓘ **Vehicles with diesel engine:** Do not run the fuel tank empty.
When the fuel tank is completely empty, top up with at least 5 l diesel before starting the vehicle.

ⓘ **Vehicles with diesel engine:** Use a filler neck with a large diameter for vehicles with a diesel engine when topping up fuel from a canister. Otherwise, the filler neck cannot slide into the tank filler neck.

- Replace the fuel filler cap on the tank filler neck and turn clockwise until it engages audibly.
- Close fuel filler flap (1).

Depressurising the fuel tank (plug-in hybrid with petrol engine)

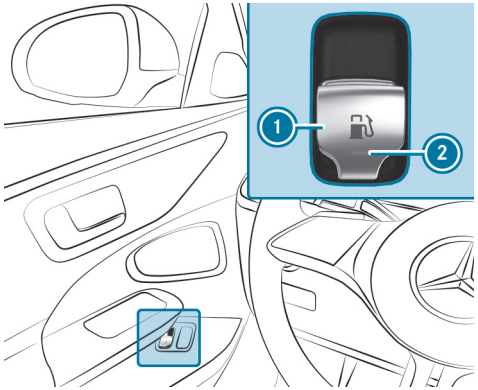

► Pull the button (1) once briefly.

The indicator lamp (2) flashes and the Please wait Depressurising fuel tank message appears on the driver display.

When the fuel tank is depressurised, the indicator lamp (2) lights up continuously.

The Fuel tank is depressurised Ready for refuelling message appears on the driver display and the fuel filler flap opens automatically.

ⓘ Depressurising the fuel tank may take several minutes under certain circumstances.

The fuel tank can be depressurised only if the conditions described above are fulfilled. Otherwise, drive the vehicle at least 0.5 km and repeat the process.

ⓘ **THE FOLLOWING SITUATIONS INDICATE A MALFUNCTION:**

- The indicator lamp (2) starts flashing and then goes out.
- The yellow engine diagnosis warning lamp lights up.

NOTE
Damage to the fuel filler flap when opening it

If an attempt is made to open a fuel filler flap that is not unlocked, the fuel filler flap or the opening mechanism may be damaged.

► Only refuel when the fuel filler flap has opened automatically.

You can watch an animation on this topic via the following link:

AdBlue® (vehicles with a diesel engine only)

NOTES ON TOPPING UP ADBLUE®

AdBlue® is a water-soluble fluid for the NOx exhaust gas aftertreatment of diesel engines. In order for the exhaust gas aftertreatment to function properly, only use AdBlue® in accordance with ISO 22241.

ADBLUE® IS CHARACTERISED BY THE FOLLOWING:

- non-toxic
- colourless and odourless
- non-flammable

If you open the AdBlue® tank, small amounts of ammonia vapour may escape. Only fill the AdBlue® tank in well-ventilated areas.

Avoid AdBlue® coming into contact with skin, eyes or clothing. Keep children away from AdBlue®.

Do not swallow AdBlue®. If AdBlue® is swallowed, immediately rinse out your mouth thoroughly. Thereafter, drink plenty of water. Seek immediate medical attention.

Observe the notes on operating fluids (⟶ page 862).

YOU CAN OBTAIN ADBLUE® HERE:

- AdBlue® can be topped up as part of a fast service at a qualified specialist workshop, e.g. a Mercedes-Benz Service Centre.
- AdBlue® is available at many filling stations from AdBlue® filling pumps.
- Alternatively, AdBlue® is available at qualified specialist workshops, e.g. Mercedes-Benz service centres, and at many filling stations in AdBlue® refill canisters or AdBlue® refill bottles.

ⓘ Ensure the connection between the refill container and vehicle filler neck does not drip.

TOPPING UP ADBLUE®

NOTE
Engine damage due to AdBlue® being in the fuel

- ▶ AdBlue® must not be used to fill the fuel tank.
- ▶ Only use AdBlue® to fill the AdBlue® tank.
- ▶ Do not overfill the AdBlue® tank.

NOTE
Contamination of the vehicle interior due to AdBlue® leakage

- ▶ After topping up, carefully close the AdBlue® refill container.
- ▶ Avoid carrying AdBlue® refill containers permanently in the vehicle.

Requirements:

- The vehicle is unlocked.

THE FOLLOWING MESSAGES APPEAR IN ORDER ON THE DRIVER DISPLAY WHEN THE ADBLUE® TANK REQUIRES TOPPING UP:

- Refill AdBlue See Owner's Manual. The AdBlue® level has fallen below the reserve range. Top up with AdBlue® immediately.
- Top up AdBlue Emergency op. in XXX km See Owner's Manual. The low AdBlue® level will lead to limited performance after the remaining distance displayed has been driven. Top up with AdBlue® immediately.
- Top up AdBlue XX,X l Emerg. op.: max. XXX km/h Start not poss. in XXX km. The low AdBlue® level will lead to limited performance from the speed displayed. After the remaining distance displayed has been covered, it will no longer be possible to start the vehicle. Add at least the indicated quantity of AdBlue®.
- Top up XX,X l AdBlue Switch vehicle on, wait 60 sec. or engine start not possThe AdBlue® tank is empty. You can no longer start the vehicle. Add at least the indicated quantity of AdBlue®. Switch on the vehicle and wait approx. 60 seconds. Start the vehicle.

Plug-in hybrid:

THE FOLLOWING MESSAGES APPEAR IN ORDER ON THE DRIVER DISPLAY WHEN THE ADBLUE® TANK REQUIRES TOPPING UP:

- Refill AdBlue See Owner's Manual. The AdBlue® level has fallen below the reserve range. Top up with AdBlue® immediately.
- Top up AdBlue In XXX km Electric only. See Owner's Manual. The low AdBlue® level will result in the combustion engine being switched off after the displayed remaining distance has been driven. From this point on, the vehicle can be driven only in all-electric mode, depending on the state of charge of the high-voltage battery. Top up with AdBlue® immediately.
- Top up XX,X l AdBlue Only "Electric" available See Owner's ManualThe AdBlue® tank is empty. The vehicle can be driven only in all-electric mode, depending on the state of charge of the high-voltage battery. Add at least the indicated quantity of AdBlue®. Switch on the vehicle and wait approx. 60 seconds. Start the vehicle.

You can display the AdBlue® range and level on the driver display in the menu Service.

ⓘ The AdBlue® range indicated is highly dependent upon driving style and operating conditions. The actual range can therefore deviate from the calculated range.

OPENING THE ADBLUE® FILLER CAP

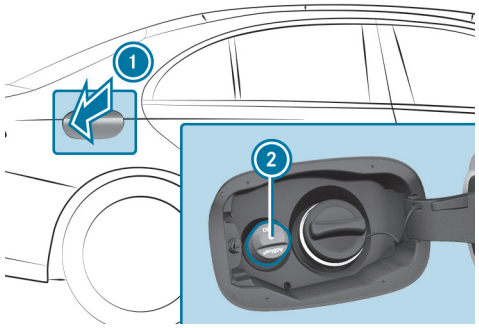

► Press on the centre rear of fuel filler flap (1).

► Turn AdBlue® filler cap (2) counter-clockwise and remove it.

ⓘ You can also place the AdBlue® filler cap in the filler cap holder in the hinge arm of the fuel filler flap.

TOPPING UP ADBLUE®

Mercedes-Benz recommends that you top up AdBlue® at a pump system. If there is no AdBlue® pump system available you can also top up AdBlue® with a canister.

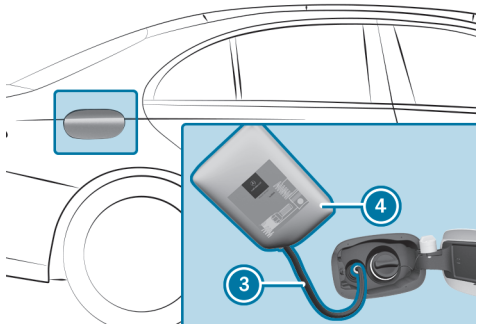

- Unscrew the cap of AdBlue® refill canister (4).
- Screw disposable hose (3) onto the opening of AdBlue® refill canister (4) until hand-tight.
- Screw disposable hose (3) onto the filler neck of the vehicle until hand-tight.
- Lift up and tip AdBlue® refill canister (4).

  The filling process stops when the AdBlue® tank is completely full.

  AdBlue® refill canister (4) can be removed when it has been only partially emptied.
- Unscrew disposable hose (3) and close AdBlue® refill canister (4) in reverse order.
- Replace AdBlue® filler cap (2) and turn it clockwise until it audibly engages.
- Close fuel filler flap (1).
- Switch on the vehicle for at least 60 seconds.

ⓘ If it was no longer possible to start the vehicle due to the empty AdBlue® tank, it takes up to 60 seconds for topping up to be detected.

- Start the vehicle.

ⓘ Avoid storing AdBlue® refill containers permanently in the vehicle.

Charging the high-voltage battery (plug-in hybrid)

Notes on charging the high-voltage battery

DANGER
Risk of fatal injuries in case of improper handling of the Flexible Charging System Pro

If you use the Flexible Charging System Pro, this may e.g. result in fires or an electric shock.

► Observe the notes in the operating instructions for the Flexible Charging System Pro. Potential dangers may otherwise remain undetected.

NOTE
High-voltage battery damage due to leaving the vehicle idle for lengthy periods of time

Lithium-ion batteries experience a natural self-discharge.

Exhaustive discharging can therefore occur if the vehicle is idle for several months. This can damage the high-voltage battery.

► To avoid damage, please observe the following recommendations when handling the high-voltage battery.

NOTE
Accelerated ageing of the high-voltage battery due to not observing the following recommendations

As a result of its basic characteristics, the storage capacity of and the amount of energy available from the high-voltage battery decreases over the course of its life. Due to this, both the maximum electrical range that can be achieved by the vehicle and its maximum electrical output can be impaired.

THE FOLLOWING FACTORS COULD ACCELERATE THE AGEING OF THE HIGH-VOLTAGE BATTERY:

- a high level of charge, especially if the vehicle is idle for a lengthy period of time
- frequent rapid charging with direct current (mode 4)
- leaving the vehicle idle for lengthy periods at high ambient temperatures

► To avoid accelerated ageing, please observe the following recommendations when handling the high-voltage battery.

NOTE
Damage to the drive system when charging the high-voltage battery at extreme altitudes

The drive system may be damaged if the high-voltage battery is charged at elevations greater than 4,000 m above sea level.

It may then no longer be possible to continue the journey.

► Avoid charging processes at extreme altitudes.

RECOMMENDATIONS WHEN HANDLING THE HIGH-VOLTAGE BATTERY:

- Quick charge the high-voltage battery with direct current (mode 4) only when required.
- Charge the high-voltage battery on average up to a state of charge of 80 %. From a state of charge of 80 %, the charging time increases significantly.
- In case of longer idle times, switch off the vehicle with a state of charge of the high-voltage battery between 25 % and 30 %. Do not permanently connect the high-voltage battery to power supply equipment.
- In the case of longer non-operational periods, avoid high outside temperatures wherever possible.
- Check the high-voltage battery's state of charge every six weeks (⟶ page 398).
- Make sure to charge the high-voltage battery if the state of charge is below 15 %.
- Do not disconnect the 12 V battery even if the vehicle is left non-operational for a long period. Otherwise the condition of the vehicle's high-voltage battery cannot be monitored.
- When using the high-voltage battery only with low states of charge, fully charge the high-voltage battery twice a year.

DEPENDING ON THE EQUIPMENT AND NATIONAL VERSION, YOUR VEHICLE IS EQUIPPED WITH ONE OF THE FOLLOWING VEHICLE SOCKETS:

- Type 1 for AC charging (mode 2/3)
- Type Combo 1 for AC charging (mode 2/3) and DC charging (mode 4)
- Type 2 for AC charging (mode 2/3)
- Type Combo 2 for AC charging (mode 2/3) and DC charging (mode 4)

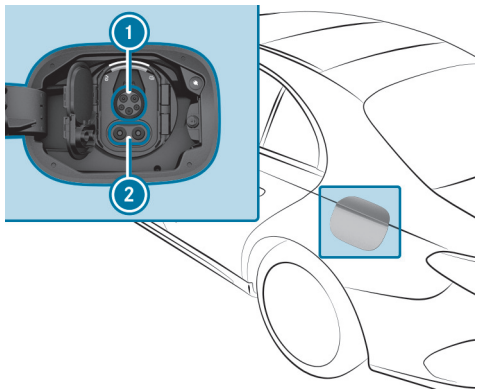

Combo 1 vehicle socket

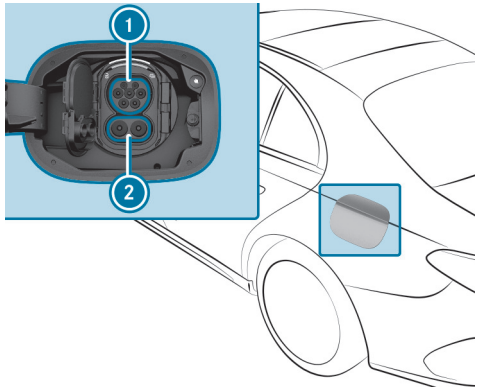

Combo 2 vehicle socket

① AC charging connection type 1 or type 2

② Socket extension for DC charging

ⓘ When using a CCS charging cable (Combined Charging System) for charging with direct current at a vehicle socket type Combo, both connections on vehicle socket ① and ② are used for charging.

CHARGING OPTIONS FOR THE HIGH-VOLTAGE BATTERY (MODE 2, 3 OR 4):

- While driving by means of recuperation
- Stationary AC charging:
  - at a mains socket (mode 2)
  - at a wallbox or charging station (mode 3)
- Stationary DC charging (vehicles with vehicle socket type Combo):
  - at a rapid charging station (mode 4)

Depending on the country-specific vehicle equipment and your vehicle's charging cable, single-phase AC charging is also possible.

Observe the different mains requirements of your current location when charging. Only use charging cables which conform to the mains requirements. Consult a qualified electrician or your local mains operator if you have any questions.

It is recommended that you charge the high-voltage battery at a wallbox or charging station due to the higher charging power and better charging efficiency offered.

Information on charging settings (⟶ page 605).

SYSTEM LIMITS

THE PERFORMANCE OF THE HIGH-VOLTAGE BATTERY MAY BE IMPAIRED BY THE FOLLOWING:

- high or low outside temperatures
- electrical auxiliary consumers in the vehicle being switched on, e.g. operating the climate control system
- extended idle time without charging

THE CHARGING TIME OR THE CHARGING POWER OF THE HIGH-VOLTAGE BATTERY MAY BE INCREASED BY THE FOLLOWING:

- high or low outside temperatures
- a low or high state of charge of the high-voltage battery
- the maximum available charging current of the charging device
- the age of the high-voltage battery

Notes on charging the high-voltage battery at a mains socket (mode 2)

⚠ **DANGER**
Risk of fatal injuries in case of improper handling of the Flexible Charging System Pro

If you use the Flexible Charging System Pro, this may e.g. result in fires or an electric shock.

► Observe the notes in the operating instructions for the Flexible Charging System Pro. Potential dangers may otherwise remain undetected.

DANGER
Risk of fatal injury from incorrectly installed component parts

Connecting the charging cable to a mains socket using incorrectly installed component parts could cause fires or an electrical shock, for example.

- ► Only connect the charging cable to a mains socket that:
- has been properly installed and
- has been inspected by a qualified electrician.

- ► For safety reasons, only use the charging cable supplied with the vehicle or a genuine Mercedes-Benz charging cable.
- ► Purchase these parts at a Mercedes-Benz service centre and obtain advice there.

Mercedes-Benz thoroughly tests these original charging cables for their suitability for high-voltage charging of your vehicle.

- ► If no Mercedes-Benz charging cable is available, use a charging cable that has been tested and approved by the charging cable manufacturer for charging your vehicle's high-voltage battery.
- ► Never use a damaged charging cable.
- ► Do not use:
- Extension cables
- Cable reels
- Power strips

- ► Only use a socket adapter that has been tested and approved by the manufacturer for charging the high-voltage battery in an electric vehicle. Never use multiple socket adapters. For charging at the mains socket, only use appropriate socket adapters for AC charging.
- ► Observe the safety notes in the Owner's Manual for the socket adapter.

The charging process can vary depending on the power supply equipment. The charging times when charging the high-voltage battery at a mains socket are considerably longer than when charging at a wallbox or charging station.

MERCEDES-BENZ RECOMMENDS THE FOLLOWING CHARGING POWER:

- at least 1.4 kW/phase for reliable charging to avoid unwanted charging breaks or interruptions
- the maximum possible charging power for efficient charging

Only use the charging cable supplied with the vehicle or a Mercedes-Benz charging cable approved for your vehicle in your country for charging at a mains socket.

If a Mercedes-Benz charging cable is not available in your country, use a charging cable that fulfils the current local technical and regulatory requirements and has been tested and approved for your vehicle by the charging cable manufacturer for charging at a mains socket. If you use a charging cable of this type, be sure to observe the instructions on the maximum permissible charging current (→ page 382).

Information on approved charging cables can be obtained from a qualified specialist workshop.

Do not leave the charging cable control element hanging loose from a mains socket.

DO NOT LIFT THE CONTROL ELEMENT BY THE FOLLOWING COMPONENT PARTS:

- The charging cable plug
- The mains plug

When charging, protect the charging cable control element from excessive heat such as direct sunlight. Otherwise the charging process may be aborted.

Notes on charging the high-voltage battery at a wallbox or charging station (mode 3)

DANGER
Risk of fatal injury from incorrectly installed component parts

Connecting the charging cable to a wallbox using incorrectly installed components could cause fires or an electrical shock, for example.

- ► Only connect the charging cable to a wallbox that:
  - has been properly installed and
  - has been inspected by a qualified electrician.
- ► For safety reasons, only use charging cables that have been tested and approved by the manufacturer for charging the high-voltage battery in an electric vehicle.
- ► Never use damaged charging cables.
- ► Do not extend the charging cable.
- ► Only use a socket adapter that has been tested and approved by the manufacturer for charging the high-voltage battery in an electric vehicle. Never use several socket adapters. For charging at the wallbox or charging station with alternating current, only use socket adapters for AC charging.
- ► Observe the safety notes in the Owner's Manual for the wallbox.

If charging at a wallbox without pre-installed cable, use the optionally available charging cable for wallbox and charging station (mode 3). The charging cable is stowed in a bag in the load compartment.

Only use charging cables that have been tested and approved by the manufacturer for charging the high-voltage battery in an electric vehicle.

DANGER
Risk of fatal injury if damaged component parts are used

If you use a damaged component to connect the vehicle to a charging station, this may lead to fires or an electrical shock, for example.

- Visually inspect the charging station for obvious signs of damage, e.g. serious damage to the housing or charging cable connection.
- Never use damaged charging cables.
- Do not extend the charging cable.
- Do not use adapters. The only exception is if the adapter has been tested by Mercedes-Benz and approved for your vehicle.
- Be sure to observe the safety notes at the charging station.

MERCEDES-BENZ RECOMMENDS THE FOLLOWING CHARGING POWER:

- at least 1.4 kW/phase for reliable charging to avoid unwanted charging breaks or interruptions
- at least 1.8 kW/phase for efficient charging

Most charging stations must be activated before the charging process, e.g. using an RFID card or via Plug & Charge. Observe the on-site operator's instructions for the charging station and the notes on MB.CHARGE Public (→ page 621).

The amount of energy dispensed for the charging process, shown by the charging station, may be higher than the amount of energy actually absorbed by the high-voltage battery. This is the result of different levels of charging losses and is described as recharge efficiency. Charging losses occur, for example, due to heat that builds up when the vehicle is charging or from running auxiliary consumers. Further information on recharge efficiency can be obtained at a qualified specialist workshop.

Notes on charging the high-voltage battery at a quick charging station (mode 4)

DANGER
Risk of fatal injury if damaged component parts are used

If you use a damaged component to connect the vehicle to a charging station, this may lead to fires or an electrical shock, for example.

- Visually inspect the charging station for obvious signs of damage, e.g. serious damage to the housing or charging cable connection.
- Never use damaged charging cables.
- Do not extend the charging cable.
- Only use a socket adapter that has been tested and approved by the manufacturer for charging the high-voltage battery in an electric vehicle. Never use several socket adapters. When charging at a charging station with alternating current (mode 3), only use the corresponding socket adapters for charging with alternating current and when charging at a fast charging station with direct current (mode 4), only use socket adapters for direct current charging.
- Be sure to observe the safety notes at the charging station.

DANGER
Risk of fatal injuries when carrying out maintenance work during the charging process

During the charging process, the high-voltage on-board electrical system is under high voltage.

- Do not perform any maintenance work during the charging process.

Most charging stations must be activated before the charging process, e.g. using an RFID card or via Plug & Charge. Observe the on-site operator's instructions for the charging station and the notes on MB.CHARGE Public (⟶ page 621).

The amount of energy dispensed for the charging process, shown by the charging station, may be higher than the amount of energy actually absorbed by the high-voltage battery. This is the result of different levels of charging losses and is described as recharge efficiency. Charging losses occur, for example, due to heat that builds up when the vehicle is charging or from running auxiliary consumers. Further information on recharge efficiency can be obtained at a qualified specialist workshop.

Maximum permissible charging current for charging at a mains socket

DANGER
Risk of fatal injuries in case of improper handling of the Flexible Charging System Pro

If you use the Flexible Charging System Pro, this may e.g. result in fires or an electric shock.

- Observe the notes in the operating instructions for the Flexible Charging System Pro. Potential dangers may otherwise remain undetected.

NOTE
Overloading the mains socket due to excessive charging current

If the charging current is too high, the fuse could be tripped or the external mains supply could overheat.

- Ensure that the external power supply is designed for the charging current provided.
- For safety reasons, only use the charging cable supplied with the vehicle or a genuine Mercedes-Benz charging cable.
  Mercedes-Benz thoroughly tests these original charging cables for their suitability for high-voltage charging of your vehicle.
- Purchase these parts at a Mercedes-Benz service centre and obtain advice there.
- If no Mercedes-Benz charging cable is available, use a charging cable that has been tested and approved by the charging cable manufacturer for charging your vehicle's high-voltage battery.
- Check the maximum charging current using the charging capacity shown on the driver display.

The maximum charging current value for a supplied Mercedes-Benz charging cable is set on a country-specific basis. When charging abroad, the maximum value may exceed the permitted value for that country.

If you use the Mercedes-Benz Flexible Charging System Pro, the maximum charging current can be set for a specific country (see Owner's Manual for the charging system).

- Before a charging process at a mains socket, have the maximum permissible charging current for the relevant mains socket or the building mechanicals checked by a qualified electrician.
- When abroad, observe the country-specific laws when charging.

If a Mercedes-Benz charging cable is not available in your country, use a charging cable that fulfils the current local technical and regulatory requirements and has been tested for your vehicle by the charging cable manufacturer for charging at a mains socket. If you use such a charging cable for a charging voltage of 230 V, the charging current must be limited to a maximum of 8 A. For a charging voltage of 120 V, the charging current must be limited to a maximum of 12 A.
Information on approved charging cables can be obtained from a qualified specialist workshop.

If you have questions concerning the charging current or if there is a malfunction, please contact a qualified specialist workshop.

Charging cable

OVERVIEW OF THE CHARGING CABLE OPERATING UNIT

DANGER
Risk of fatal injuries in case of improper handling of the Flexible Charging System Pro

If you use the Flexible Charging System Pro, this may e.g. result in fires or an electric shock.

- Observe the notes in the operating instructions for the Flexible Charging System Pro. Potential dangers may otherwise remain undetected.

Your vehicle may be equipped with one of the two Mercedes-Benz charging cables described below for charging at the mains socket. The respective operating unit of the charging cable displays the current status of the charging process.

If a Mercedes-Benz charging cable is not available in your country, use a charging cable that fulfils the current local technical and regulatory requirements and has been tested for your vehicle by the charging cable manufacturer for charging at a mains socket. If you use a charging cable of this type, be sure to observe the instructions on the maximum permissible charging current (→ page 382).
Information on approved charging cables can be obtained from a qualified specialist workshop.

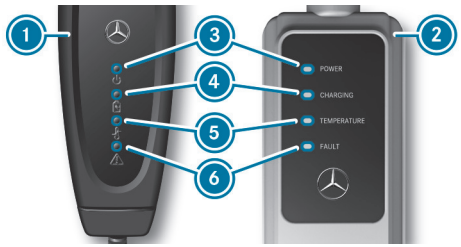

1 Gen5 charging cable
2 Gen4 charging cable
3 Supply voltage indicator
4 Charging process display
5 Temperature monitor display
6 Safety system display

SUPPLY VOLTAGE INDICATOR
3 Lights up in white: there is mains voltage

CHARGING PROCESS DISPLAY
4 Flashes in green: high-voltage battery is being charged

TEMPERATURE MONITOR DISPLAY
5 Flashes in red: overheating at the mains plug – the charging process has stopped

5 LIGHTS UP RED AND

- 4 simultaneously flashes green: overtemperature – charging power is reduced
- 4 does not flash: overtemperature – charging process terminated

If temperature monitor display 5 lights up, it can help to protect the charging cable from direct sunlight.

SAFETY SYSTEM DISPLAY (GEN4 CHARGING CABLE)

- 6 flashes red: charging cable or internal fault – charging process not possible
- 6 lights up red: infrastructure fault – charging process not possible, use a different mains socket

If the charging cable operating unit detects residual current or a malfunction, the charging process is interrupted. The charging process is resumed automatically when the malfunction has been rectified.

SAFETY SYSTEM DISPLAY (GEN5 CHARGING CABLE)
6 flashes red: charging cable or internal fault, charging process not possible, reset charging cable operating unit

6 LIGHTS UP RED AND

- 3 is off: power supply fault, charging process not possible, use a different mains socket
- 3 is on: vehicle fault, charging process not possible, reset charging cable operating unit

NOTES ON GEN5 CHARGING CABLE
When all four displays light up, the charging cable operating unit is performing a self-test.

If safety system 6 displays a charging cable fault or a vehicle fault, first reset the charging cable operating unit. To do this, disconnect the charging cable from the vehicle and from the mains socket and wait for approximately five seconds. If the malfunction persists after the charging cable is reconnected, charging process at the mains socket is not possible. The charging cable must be replaced or the vehicle plug must be checked at a qualified specialist workshop, depending on the readout.

STOWING THE CHARGING CABLE

Always stow the vehicle's charging cable in the charging cable bag supplied and secure the charging cable bag in the boot or load compartment using the corresponding retaining strap. Otherwise, the charging cable bag with the charging cable is not sufficiently secured.



Example: charging cable bag in the boot/load compartment

As delivered, charging cable bag (1) with retaining strap (2) is located in the boot or load compartment. To secure the charging cable bag, the retaining strap must be attached to tie-down eye (3). Do not use bag hooks to attach the retaining strap.

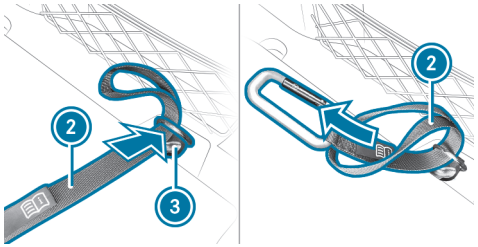

- Feed the loop end of retaining strap (2) through tie-down eye (3) in the boot or load compartment.
- Feed the end with the snap hook through the loop of retaining strap (2).

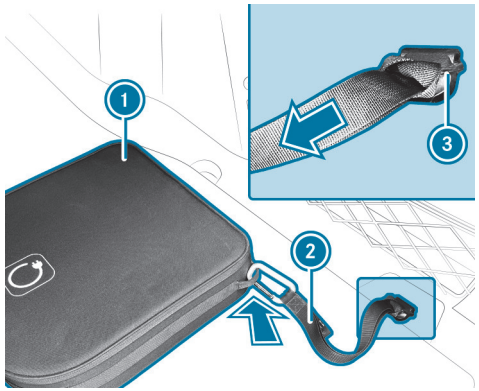

- Tighten retaining strap (2) so that the knot around tie-down eye (3) is tight and secure.
- Hook the snap hook of retaining strap (2) in a tie-down eye of charging cable bag (1).

Functions of the indicator lamps on the vehicle socket

ⓘ Depending on the national version, your vehicle is equipped with one of the following vehicle sockets.

The socket flap is centrally locked and unlocked together with the vehicle.

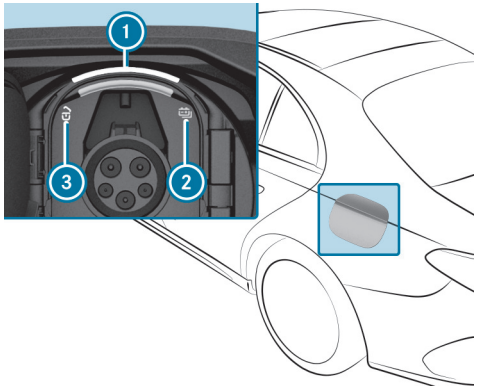

Combo 1 vehicle socket

1 Socket lamp
2 Charging process indicator lamp
3 Locking status indicator lamp

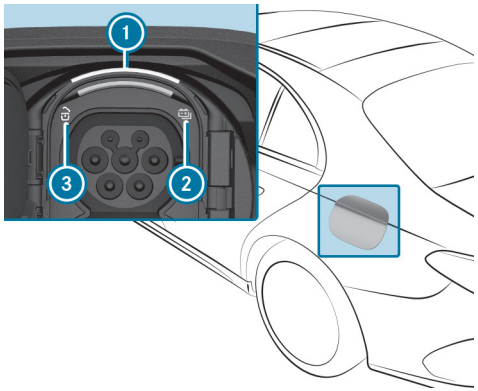

Combo 2 vehicle socket

1 Socket lamp
2 Charging process indicator lamp
3 Locking status indicator lamp

The upper curve of the socket lamp 1 is used for the lighting and flashes or lights up as with indicator lamp 3. The lower curve is used for the status display and flashes or lights up as with indicator lamp 2.

The colour and behaviour of indicator lamps 2 and 3 have the following meaning.

LOCKING STATUS 3

- Lights up white: vehicle socket unlocked; insert or remove charging cable
- Flashes white: malfunction during locking or unlocking

STATUS OF THE CHARGING PROCESS 2

- Lights up green (for approx. 90 s): charging process completed
- Flashes green: charging; active energy flow
- Lights up orange (for approx. 90 s): charging break
- Flashes orange: connection is being established
- Flashes red (for approx. 60 s): malfunction in vehicle; charging not possible

Starting the alternating current charging process (mode 2/3)

DANGER
Risk of fatal injuries in case of improper handling of the Flexible Charging System Pro

If you use the Flexible Charging System Pro, this may e.g. result in fires or an electric shock.

- ► Observe the notes in the operating instructions for the Flexible Charging System Pro. Potential dangers may otherwise remain undetected.

DANGER
Risk of death when charging at a damaged socket

The charging process uses high voltage.

If the charging cable, the vehicle socket or the mains socket are damaged, you could receive an electric shock.

- ► Only use an undamaged charging cable.
- ► Avoid mechanical damage such as crushing, abrading or driving over the cable.
- ► Have a damaged vehicle socket replaced at a qualified specialist workshop as soon as possible.
- ► Never connect the charging cable to a damaged vehicle socket.

NOTE
Damage due to overheating of the charging cable and charge port

The charging cable and charge port may heat up within the permissible limit values during the charging process.

THE HEATING OF THE CHARGING CABLE AND CHARGE PORT IS INFLUENCED BY THE FOLLOWING FACTORS:

- The power supply equipment of the mains supply and the charging cable are intact.
- The instructions for handling the charging cable and control element on the charging cable have been observed.

- ► If the charging cable or the charge port become too hot, do not touch them and have the power supply equipment of the mains supply checked.

NOTE
Damage to or soiling of the vehicle socket

- ► If no charging cable is connected, always keep the socket cover and the socket flap closed. These protect the vehicle socket from dirt and damage.
- ► Before closing the socket flap, ensure that the socket cover is properly closed. Otherwise damage may occur and it may no longer be possible to open the socket flap.

NOTE
Damage to the vehicle socket or the charging cable connector due to incorrect handling

Do not use excessive force (maximum 300 N) to fully insert the charging cable connector into the vehicle socket. You may otherwise damage the vehicle socket, the charging cable connector or their contacts.

► If you feel there is increased resistance, pull the charging cable connector out of the socket and reinsert it.

Requirements:

- The transmission is in position P.
- The vehicle is unlocked or the vehicle is locked and the distance between the key and the vehicle does not exceed 1 m.
- The charging cable is not in tension.

DEPENDING ON THE VEHICLE'S EQUIPMENT AND THE NATIONAL VERSION, YOUR VEHICLE IS EQUIPPED WITH ONE OF THE FOLLOWING VEHICLE SOCKETS:

- Type 1 for AC charging (mode 2 or 3)
- Type Combo 1 for AC charging (mode 2 or 3) and DC charging (mode 4)
- Type 2 for AC charging (mode 2 or 3)
- Type Combo 2 for AC charging (mode 2 or 3) and DC charging (mode 4)

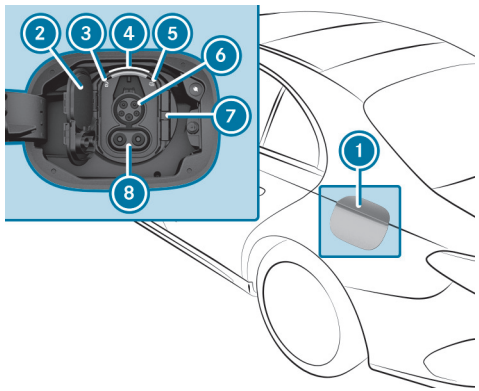

Combo 1 vehicle socket

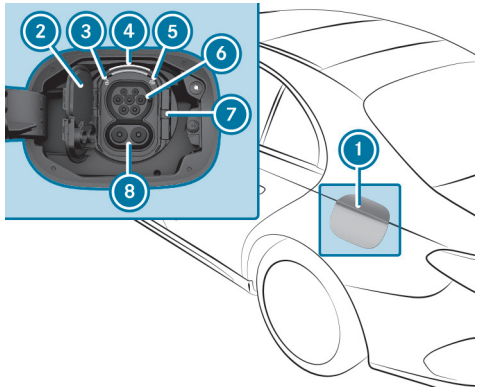

Combo 2 vehicle socket

► Press on the centre rear of socket flap (1) and swing the socket flap to the front.
The indicator lamp (3) and upper status display (4) light up white.

ⓘ The socket flap (1) can also be opened via the multimedia system (⟶ page 605).

- Press catch (7) to the right and open socket cover (2).

ⓘ On vehicles with a Combo vehicle socket, only connection (6) is required for the charging cable plug. Only open the upper part of socket cover (2).

- For charging at a mains socket, fully insert the mains plug into the mains socket of the external power source.
- **Flexible Charging System Pro:** if necessary, switch off protective earth conductor detection and set maximum charging current (see the charging system's Owner's Manual).
- Fully insert the charging cable plug into vehicle socket (6). If the wallbox/charging station is not equipped with a connecting cable, fully insert the plug of the vehicle's charging cable into the wallbox/charging station socket.

  Make sure that the inserted charging cable is not in tension.

  If the charging station is enabled, the [battery] indicator lamp (5) and lower status display (4) flash orange, and green as soon as the high-voltage battery is being charged.

When the charging cable is connected to the vehicle, the vehicle cannot be started or moved.

At the start of the charging process, the charge level display is shown on the driver display with a charging prediction. The charging prediction is the point in time at which the high-voltage battery will be fully charged.

ⓘ Depending on the temperature, the fan and battery cooling system may audibly switch on during the charging process.

ⓘ If the vehicle is idle for long periods and connected to the mains supply, the high-voltage battery will be recharged automatically as needed or when electrical consumers are activated (e.g. pre-entry climate control).

ⓘ The vehicle is equipped with an electrical fuse that protects against overvoltages in the mains supply. This electrical fuse can be triggered e.g. in severe storms and result in tripping of the building's circuit breaker and in an interruption of charging. These functions protect the vehicle.
After the building's circuit breaker is reset, the charging process resumes automatically. Following an interruption in the power supply without the building's circuit breaker being tripped, it may take up to ten minutes for charging to resume automatically.

Ending the alternating current charging process (mode 2/3)

DANGER
Risk of death when charging at a damaged socket

The charging process uses high voltage.

If the charging cable, the vehicle socket or the mains socket are damaged, you could receive an electric shock.

- ► Only use an undamaged charging cable.
- ► Avoid mechanical damage such as crushing, abrading or driving over the cable.
- ► Have a damaged vehicle socket replaced at a qualified specialist workshop as soon as possible.
- ► Never connect the charging cable to a damaged vehicle socket.

NOTE
Damage due to overheating of the charging cable and charge port

The charging cable and charge port may heat up within the permissible limit values during the charging process.

THE HEATING OF THE CHARGING CABLE AND CHARGE PORT IS INFLUENCED BY THE FOLLOWING FACTORS:

- The power supply equipment of the mains supply and the charging cable are intact.
- The instructions for handling the charging cable and control element on the charging cable have been observed.

- ► If the charging cable or the charge port become too hot, do not touch them and have the power supply equipment of the mains supply checked.

NOTE
Damage to or soiling of the vehicle socket

- ► If no charging cable is connected, always keep the socket cover and the socket flap closed. These protect the vehicle socket from dirt and damage.
- ► Before closing the socket flap, ensure that the socket cover is properly closed. Otherwise damage may occur and it may no longer be possible to open the socket flap.

Requirements:

- The vehicle is unlocked or the vehicle is locked and the distance between the key and the vehicle does not exceed 1 m.

DEPENDING ON THE VEHICLE'S EQUIPMENT AND THE NATIONAL VERSION, YOUR VEHICLE IS EQUIPPED WITH ONE OF THE FOLLOWING VEHICLE SOCKETS:

- Type 1 for AC charging (mode 2 or 3)
- Type Combo 1 for AC charging (mode 2 or 3) and DC charging (mode 4)
- Type 2 for AC charging (mode 2 or 3)
- Type Combo 2 for AC charging (mode 2 or 3) and DC charging (mode 4)

COMBO 1 VEHICLE SOCKET

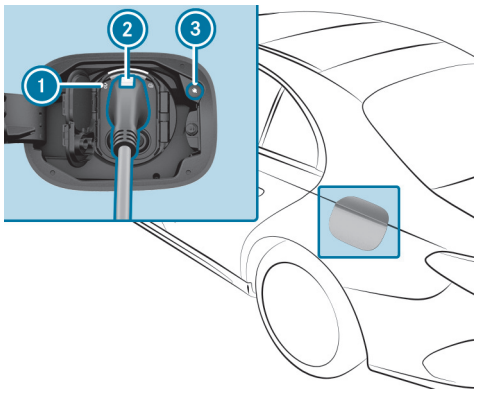

ⓘ Vehicles equipped only with a Type 1 vehicle socket for AC charging have no charging interruption button (3).

- **Type Combo 1 vehicle socket:** press the charging interruption button (3).

  The charging process is ended. The indicator lamp (1) lights up white. The vehicle socket is unlocked.

ⓘ As an alternative, and only if charging interruption button (3) is not working, you can unlock the vehicle using the vehicle key or centrally from inside to end the charging process. If the indicator lamp (1) then lights up white, the vehicle socket is unlocked for around 30 seconds.

ⓘ The charging process can also be ended via the multimedia system (⟶ page 605).

- **Type 1 vehicle socket:** unlock the vehicle with the vehicle key or centrally from inside.

  The charging process is ended. The indicator lamp (1) lights up white. The vehicle socket is unlocked.

- Press and hold button (2) on the charging cable plug and remove the charging cable plug from the vehicle socket.

ⓘ If you cannot remove the charging cable plug, repeat the unlocking procedure. If the charging cable plug is still locked, contact a qualified specialist workshop.

- Close the socket cover and the socket flap.

- Remove the charging cable plug from the mains socket, or from the socket of the wallbox/charging station, and stow the vehicle's charging cable safely in the vehicle (⟶ page 385).

COMBO 2 VEHICLE SOCKET

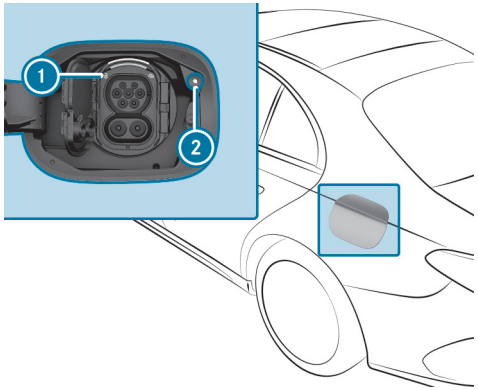

ⓘ Vehicles equipped only with a Type 2 vehicle socket for AC charging have no charging interruption button (2).

- **Type Combo 2 vehicle socket:** press the charging interruption button (2).

  The charging process is ended. The [🔓] indicator lamp (1) lights up white. The vehicle socket is unlocked.

ⓘ As an alternative, and only if charging interruption button (2) is not working, you can unlock the vehicle using the vehicle key or centrally from inside to end the charging process. If the [🔓] indicator lamp (1) then lights up white, the vehicle socket is unlocked for around 30 seconds.

ⓘ The charging process can also be ended via the multimedia system (⟶ page 605).

- **Type 2 vehicle socket:** Unlock the vehicle with the vehicle key or centrally from inside.

  The charging process is ended. The [🔓] indicator lamp (1) lights up white. The vehicle socket is unlocked for around 30 seconds.

ⓘ If you cannot remove the charging cable plug, repeat the unlocking procedure. If the charging cable plug is still locked, contact a qualified specialist workshop.

- Close the socket cover and the socket flap.
- Remove the charging cable plug from the mains socket, or from the socket of the wallbox/charging station, and stow the vehicle's charging cable safely in the vehicle (⟶ page 385).

ⓘ The [🔓] indicator lamp (1) on the vehicle socket remains lit for some time after the charging cable plug has been disconnected and then goes out.

Starting the DC charging process (mode 4)

DANGER
Risk of death when charging at a damaged socket

The charging process uses high voltage.

If the charging cable, the vehicle socket or the mains socket are damaged, you could receive an electric shock.

- ► Only use an undamaged charging cable.
- ► Avoid mechanical damage such as crushing, abrading or driving over the cable.
- ► Have a damaged vehicle socket replaced at a qualified specialist workshop as soon as possible.
- ► Never connect the charging cable to a damaged vehicle socket.

NOTE
Damage due to overheating of the charging cable and charge port

The charging cable and charge port may heat up within the permissible limit values during the charging process.

THE HEATING OF THE CHARGING CABLE AND CHARGE PORT IS INFLUENCED BY THE FOLLOWING FACTORS:

- The power supply equipment of the mains supply and the charging cable are intact.
- The instructions for handling the charging cable and control element on the charging cable have been observed.

- ► If the charging cable or the charge port become too hot, do not touch them and have the power supply equipment of the mains supply checked.

NOTE
Damage to or soiling of the vehicle socket

- ► If no charging cable is connected, always keep the socket cover and the socket flap closed. These protect the vehicle socket from dirt and damage.
- ► Before closing the socket flap, ensure that the socket cover is properly closed. Otherwise damage may occur and it may no longer be possible to open the socket flap.

NOTE
Damage to the vehicle socket or the charging cable connector due to incorrect handling

Do not use excessive force (maximum 300 N) to fully insert the charging cable connector into the vehicle socket. You may otherwise damage the vehicle socket, the charging cable connector or their contacts.

► If you feel there is increased resistance, pull the charging cable connector out of the socket and reinsert it.

Requirements:

- The transmission is in position P.
- The vehicle is unlocked or the vehicle is locked and the distance between the key and the vehicle does not exceed 1 m.
- The charging cable is not in tension.

Depending on the national version, the vehicle is equipped with one of the following vehicle sockets.

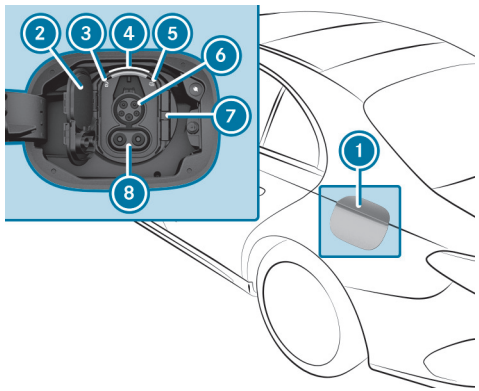

Combo 1 vehicle socket

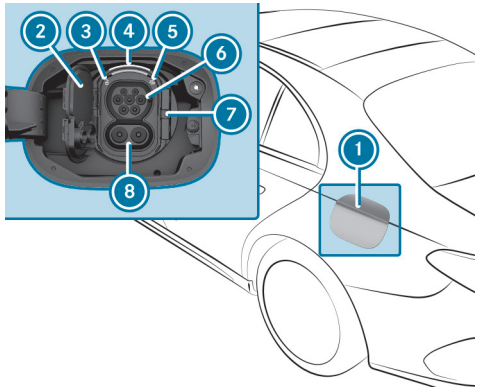

Combo 2 vehicle socket

► Press on the centre rear of socket flap (1) and swing the socket flap to the front.
The [ ] indicator lamp (3) and upper status display (4) light up white.

ⓘ The socket flap (1) can also be opened via the multimedia system (⟶ page 605).

► Press catch (7) to the right and open socket cover (2).

ⓘ Connections (6) and (8) are required for the CCS charging cable plug. Both sections of socket cover (2) must therefore be opened.

► Fully insert the CCS charging cable plug into the vehicle socket.
Make sure that the inserted charging cable is not in tension.
If the charging station is enabled, the indicator lamp (5) and lower status display (4) flash orange, and green as soon as the high-voltage battery is being charged.

When the charging cable is connected to the vehicle, the vehicle cannot be started or moved.

At the start of the charging process, the charge level display is shown on the driver display with a charging prediction. The charging prediction is the point in time at which the high-voltage battery will be fully charged.

ⓘ Depending on the temperature, the fan and battery cooling system may audibly switch on during the charging process.

ⓘ If the vehicle is idle for long periods and connected to the mains supply, the high-voltage battery will be recharged automatically as needed or when electrical consumers are activated (e.g. pre-entry climate control).

Ending the DC charging process (mode 4)

⚠ **DANGER**
Risk of death when charging at a damaged socket

The charging process uses high voltage.

If the charging cable, the vehicle socket or the mains socket are damaged, you could receive an electric shock.

► Only use an undamaged charging cable.

► Avoid mechanical damage such as crushing, abrading or driving over the cable.

► Have a damaged vehicle socket replaced at a qualified specialist workshop as soon as possible.

► Never connect the charging cable to a damaged vehicle socket.

NOTE
Damage due to overheating of the charging cable and charge port

The charging cable and charge port may heat up within the permissible limit values during the charging process.

THE HEATING OF THE CHARGING CABLE AND CHARGE PORT IS INFLUENCED BY THE FOLLOWING FACTORS:

- The power supply equipment of the mains supply and the charging cable are intact.
- The instructions for handling the charging cable and control element on the charging cable have been observed.

► If the charging cable or the charge port become too hot, do not touch them and have the power supply equipment of the mains supply checked.

NOTE
Damage to or soiling of the vehicle socket

► If no charging cable is connected, always keep the socket cover and the socket flap closed. These protect the vehicle socket from dirt and damage.

► Before closing the socket flap, ensure that the socket cover is properly closed. Otherwise damage may occur and it may no longer be possible to open the socket flap.

Requirements:

- The vehicle is unlocked or the vehicle is locked and the distance between the key and the vehicle does not exceed 1 m.

ⓘ Depending on the national version, the vehicle is equipped with one of the following vehicle sockets.

COMBO 1 VEHICLE SOCKET

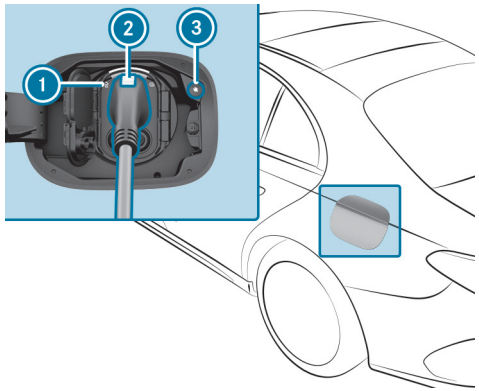

► Press charging interruption button (3).

The charging process is ended. The indicator lamp (1) lights up white. The vehicle socket is unlocked.

ⓘ As an alternative, and only if charging interruption button (3) is not working, you can unlock the vehicle using the vehicle key or centrally from inside to end the charging process. If the indicator lamp (1) then lights up white, the vehicle socket is unlocked for around 30 seconds.

ⓘ The charging process can also be ended via the multimedia system (⟶ page 605).

► Press and hold button (2) on the charging cable plug and remove the charging cable plug from the vehicle socket.

ⓘ If you cannot remove the charging cable plug, unlock the vehicle and repeat the unlocking procedure. If the charging cable plug is still locked, contact a qualified specialist workshop.

► Close the socket cover and the socket flap.

COMBO 2 VEHICLE SOCKET

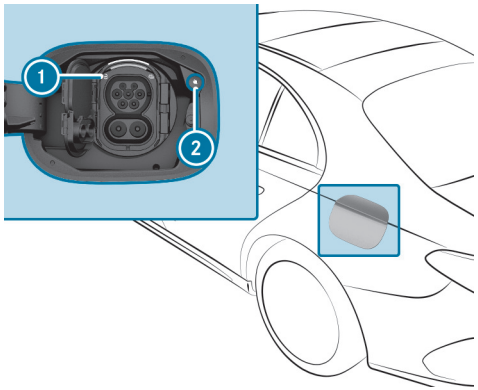

► Press charging interruption button (2).

The charging process is ended. The [🔓] indicator lamp (1) lights up white. The vehicle socket is unlocked.

ⓘ As an alternative, and only if charging interruption button (2) is not working, you can unlock the vehicle using the vehicle key or centrally from inside to end the charging process. If the [🔓] indicator lamp (1) then lights up white, the vehicle socket is unlocked for around 30 seconds.

ⓘ The charging process can also be ended via the multimedia system (⟶ page 605).

► Remove the charging cable plug from the vehicle socket.

ⓘ If you cannot remove the charging cable plug, unlock the vehicle and repeat the unlocking procedure. If the charging cable plug is still locked, contact a qualified specialist workshop.

► Close the socket cover and the socket flap.

ⓘ The left [🔓] indicator lamp (1) on the vehicle socket remains lit for some time after the charging cable plug has been disconnected and then goes out.

Function of the charge level display on the driver display

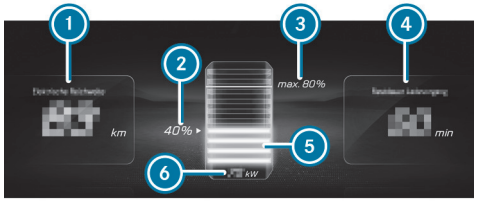

Example

1. Remaining range at current state of charge
2. Current state of charge of the high-voltage battery
3. Maximum state of charge (as per the setting)
4. Remaining time until fully charged (up to the selected maximum state of charge)
5. Dynamic charge level display
6. Current charging capacity

Indicated remaining range 1 may vary due to various factors, e.g. driving style or topography.

The driver display shows the charge level display for around two minutes when the charging cable is connected. As long as the charging cable is connected to the vehicle, the charge level display is also displayed briefly after unlocking or locking the vehicle or after opening a door.

The value of current charging power 6 can differ from the display on the charging station.

Mercedes-AMG vehicles: the prediction for remaining range 1 and maximum state of charge 3 are not displayed.

Parking

Parking the vehicle

WARNING
Risk of accident and injury caused by an insufficiently secured vehicle rolling away

If the vehicle is not securely parked sufficiently, it can roll away in an uncontrolled way even at a slight downhill gradient.

- ► On uphill or downhill gradients, turn the front wheels so that the vehicle rolls towards the kerb if it starts moving.
- ► apply the parking brake.
- ► Switch the transmission to position P.

WARNING
Risk of fire caused by hot exhaust system parts

Flammable materials such as leaves, grass or twigs may ignite.

- ► Park the vehicle so that no flammable material can come into contact with hot vehicle components.
- ► In particular, do not park on dry grassland or harvested grain fields.

WARNING
Accident- and risk of injury with unsupervised children in the vehicle

IF YOU LEAVE CHILDREN UNATTENDED IN THE VEHICLE, THEY CAN IN PARTICULAR

- Open doors and thereby endanger other persons or road users.
- get out of the car and are hit by traffic.
- Operate vehicle equipment and become trapped, forexample.

IN ADDITION, THE CHILDREN COULD ALSO SET THE VEHICLE IN MOTION, FOR EXAMPLEBY:

- releasing the parking brake.
- change the gearbox setting.
- start the vehicle.

- ► Never leave children unattended in the vehicle.
- ► When leaving the vehicle, always take the SmartKey with you and lock the vehicle.
- ► Keep the key out of reach of children.

This also applies to the Digital Vehicle Key.

NOTE
Damage to the vehicle due to it rolling away

- Always secure the vehicle against rolling away.

NOTE
Damage caused by vehicle being lowered

Vehicles AIRMATIC: The vehicle can be lowered due to differences in temperature or extended non-operational times. This can cause damage to parts of the body.

- When stopping the vehicle and when driving off, make sure that there are no obstacles such as kerbs under or in the immediate vicinity of the body.

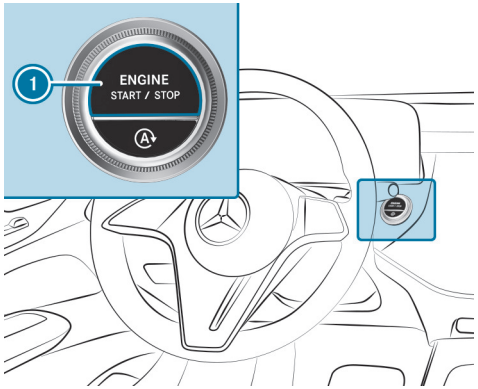

- Bring the vehicle to a standstill by depressing the brake pedal.
- On uphill or downhill gradients, turn the front wheels so that the vehicle will roll towards the kerb if it starts moving.
- Apply the electric parking brake.
- Engage transmission position P with the vehicle stationary and the brake pedal depressed (⟶ page 359).
- Switch off the vehicle by pressing the button 1.
- Release the service brake slowly.
- Exit and then lock the vehicle.

When you park the vehicle, you can still operate the side windows and the panoramic sliding sunroof for approximately four minutes as long as the driver's door is closed.

Automatic vehicle shut-off upon locking

Your vehicle is equipped with an automatic shut-off function.

IF YOU EXIT A VEHICLE IN A STATE OF OPERATIONAL READINESS, THE VEHICLE WILL BE SWITCHED OFF WHEN LOCKED UNDER THE FOLLOWING CONDITIONS:

- The vehicle has been switched on or started.
- Transmission position P is engaged.
- The driver's door is closed.
- **In addition, one of the following conditions must be met:**
  - The vehicle is locked using the vehicle key.
  - **Vehicles with KEYLESS-GO:** the vehicle is locked using KEYLESS-GO on the door handle of a closed door.
  - **Vehicles with KEYLESS-GO:** the vehicle is locked using the lock button on the boot lid.

ⓘ The vehicle remains started if it is not locked as described after leaving the vehicle. In this case, switch off the vehicle manually.

Automatic vehicle shut-off after a specific period of time

When the vehicle has been started, the following display message will appear on the driver display when you exit the vehicle or following a certain amount of time in transmission position P : Vehicle is ready to drive Shutdown occurs when locked or automatically in XX mins

The vehicle will then switch off automatically after a total holding time of 20 minutes.

ⓘ To avoid automatic shut-off after a certain period of time, acknowledge the corresponding message on the central display of the multimedia system.

THE VEHICLE REMAINS STARTED IN THE FOLLOWING CASES:

- if the vehicle is not locked as described after exiting
- if automatic shut-off is not indicated by the display message
- if automatic shut-off after a certain period of time has been deactivated via the corresponding message on the central display

In this case, switch off the vehicle manually.

Garage door opener (HomeLink®)

PROGRAMMING THE HOMELINK® BUTTONS

⚠ **DANGER**
Danger to life from toxic exhaust gas in enclosed spaces

Combustion engines emit toxic exhaust gases suchas carbon monoxide. Inhaling these exhaust gases is hazardous to health and leads to poisoning.

► Never leave the engine or, if present, the stationary heater running in an enclosed space without sufficient ventilation.

⚠ **WARNING**
Risk of injury by becoming trapped when opening and closing a garage door

When you operate or program a garage door with an integrated garage door opener, persons can become trapped or struck by the garage door if they stand within its range of movement.

► Always make sure that nobody is within the range of the garage door's movement.

ONLY OPERATE THE FOLLOWING DOORS USING THE GARAGE DOOR OPENER:

- Doors with a safety stop and reversing feature
- Doors that comply with the applicable safety standards

Requirements:

- The vehicle has been parked outside the garage or outside the door's range of movement.
- The vehicle is switched on.
- The vehicle has not been started.
- The original remote control for the garage door is used.

ⓘ The garage door opener function is always available when the vehicle is switched on.

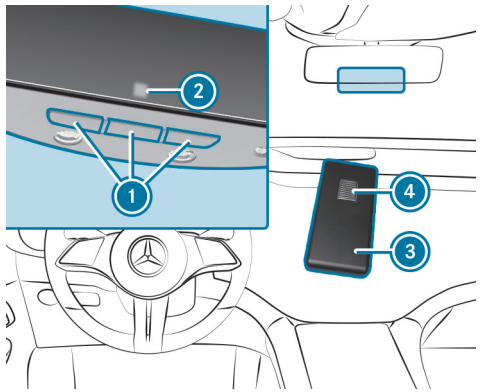

► **Programming procedure:** press one of the buttons to be programmed (1) and then release it.

If the selected button is not programmed, the indicator lamp (2) flashes slowly in orange.

ⓘ To reprogram a button that has already been programmed, press the corresponding button until the indicator lamp (2) starts to flash slowly in orange. This may take up to 20 seconds.

► Point the remote control (3) from a distance of between 5 cm and 30 cm underneath the mirror towards button (1).

► Press and hold the button (4) on the remote control (3) until you observe one of the following:

- The indicator lamp (2) lights up continuously in green. Programming is complete.
- The indicator lamp (2) flashes green. Programming was successful.

ⓘ It can take up to 20 seconds before the indicator lamp (2) lights up continuously in green.

The selected HomeLink® button is now programmed.

► **To test the programming:** press and hold the HomeLink® button for two seconds.

► Release the HomeLink® button and, after three seconds, press and hold it again for two seconds.

► Repeat this process once more (three times in total).

ⓘ If you have a garage door system with fixed code or QuickTrain technology, pressing the programmed HomeLink® button opens or closes the garage door.

If the garage door is not working and the indicator lamp (2) is flashing rapidly, you must perform a rolling code synchronisation (⟶ page 403).

PERFORMING A ROLLING CODE SYNCHRONISATION (IF REQUIRED)

DANGER
Danger to life from toxic exhaust gas in enclosed spaces

Combustion engines emit toxic exhaust gases suchas carbon monoxide. Inhaling these exhaust gases is hazardous to health and leads to poisoning.

► Never leave the engine or, if present, the stationary heater running in an enclosed space without sufficient ventilation.

WARNING
Risk of injury by becoming trapped when opening and closing a garage door

When you operate or program a garage door with an integrated garage door opener, persons can become trapped or struck by the garage door if they stand within its range of movement.

► Always make sure that nobody is within the range of the garage door's movement.

ONLY OPERATE THE FOLLOWING DOORS USING THE GARAGE DOOR OPENER:

- Doors with a safety stop and reversing feature
- Doors that comply with the applicable safety standards

Before programming the garage door opener, park the vehicle outside the garage. Ensure that the vehicle is switched on but not started.

ⓘ The garage door opener function is always available when the vehicle is switched on.

If the garage door is not working and the indicator lamp in the inside mirror is flashing rapidly, your garage door system operates with rolling code. In this case, you must perform rolling code synchronisation.

Information on rolling code synchronisation: In the following steps, you must press the "Learn" "Program" or "Smart" button on the garage door opener in your garage. Please note that the names of the buttons may vary depending on the manufacturer. For more information, refer to the owner's manual for the garage door opener.

- Have someone assist you to ensure that the steps can be carried out easier and faster.
- You may need a ladder or something of similar stability to help you reach the buttons. Do not stand on your vehicle to perform these steps!
- Certain timings must be observed for the following steps. You may have to practice these steps multiple times.

► Find the "Learn", "Program" or "Smart" button on the garage door opener in the garage.

The shape and colour of the buttons vary depending on the manufacturer.

► Press the "Learn", "Program" or "Smart" button.

An indicator lamp may begin flashing depending on the manufacturer of the garage door opener.

- Within 30 seconds, press and hold the HomeLink® button in the vehicle for three seconds.
- Press the HomeLink® button again and hold pressed for three seconds.
- Repeat this process once more (three times in total).

  Rolling code synchronisation is now complete. HomeLink® should now activate your garage door equipped with a rolling code.

ⓘ Please note that some garage door openers may require the HomeLink® button to be pressed for different lengths of time during the synchronisation process. Refer to the for the garage door manufacturer's instruction manual.
More information can be found on the https://www.homelink.com

RESOLVING PROBLEMS WHEN PROGRAMMING HOMELINK®

⚠ **DANGER**
Danger to life from toxic exhaust gas in enclosed spaces

Combustion engines emit toxic exhaust gases suchas carbon monoxide. Inhaling these exhaust gases is hazardous to health and leads to poi-soning.

- Never leave the engine or, if present, the stationary heater running in an enclosed space without sufficient ventilation.

⚠ **WARNING**
Risk of injury by becoming trapped when opening and closing a garage door

When you operate or program a garage door with an integrated garage door opener, persons can become trapped or struck by the garage door if they stand within its range of movement.

- Always make sure that nobody is within the range of the garage door's movement.

ONLY OPERATE THE FOLLOWING DOORS USING THE GARAGE DOOR OPENER:

- Doors with a safety stop and reversing feature
- Doors that comply with the applicable safety standards

Before programming the garage door opener, park the vehicle outside the garage. Ensure that the vehicle is switched on but not started.

ⓘ The garage door opener function is always available when the vehicle is switched on.

- Ensure that the remote control used for programming is approved by the manufacturer of the garage door opener and activates the door.

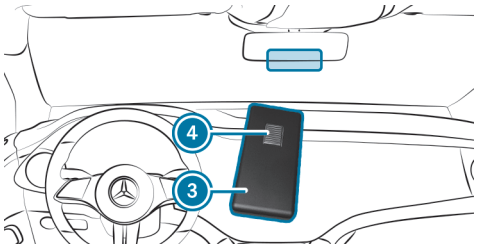

- Replace the batteries in the remote control (3).
- Hold the remote control (3) at various angles in front of the inside mirror from a distance of between 5 cm and 30 cm.

  Hold each position for at least 25 seconds before trying another position.
- Hold the remote control (3) at the same angles at various distances in front of the inside mirror. Maintain each position for at least 25 seconds.
- On remote controls that only transmit for a limited period, press the button (4) on the remote control (3) again before transmission ends.

SUPPORT AND ADDITIONAL PROGRAMMING INFORMATION:

- **European Union (EU):** call the HomeLink® hotline on (0) 0800 046 635 465 (free of charge) or +49 (0) 7132 3455 733 (charges apply)

  Please note that the free number may not be available, depending on your mobile phone provider.
- Visit the website https://www.homelink.com

DELETING THE HOMELINK® BUTTONS

DANGER
Danger to life from toxic exhaust gas in enclosed spaces

Combustion engines emit toxic exhaust gases suchas carbon monoxide. Inhaling these exhaust gases is hazardous to health and leads to poisoning.

- Never leave the engine or, if present, the stationary heater running in an enclosed space without sufficient ventilation.

WARNING
Risk of injury by becoming trapped when opening and closing a garage door

When you operate or program a garage door with an integrated garage door opener, persons can become trapped or struck by the garage door if they stand within its range of movement.

- Always make sure that nobody is within the range of the garage door's movement.

ONLY OPERATE THE FOLLOWING DOORS USING THE GARAGE DOOR OPENER:

- Doors with a safety stop and reversing feature
- Doors that comply with the applicable safety standards

Before programming the garage door opener, park the vehicle outside the garage. Ensure that the vehicle is switched on but not started.

ⓘ The garage door opener function is always available when the vehicle is switched on.

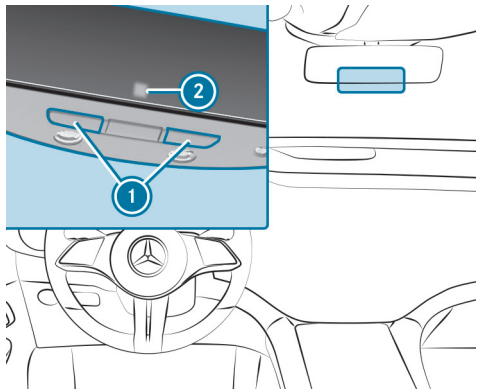

- ► Press and hold the outer buttons (1).
  The indicator lamp (2) lights up orange.
- ► As soon as the indicator lamp (2) starts flashing rapidly in green, release the buttons (1).
  This may take up to 10 seconds.
  The entire memory has been deleted.

SPECIAL PROGRAMMING MODES (IF REQUIRED)

⚠ **DANGER**
Danger to life from toxic exhaust gas in enclosed spaces

Combustion engines emit toxic exhaust gases suchas carbon monoxide. Inhaling these exhaust gases is hazardous to health and leads to poisoning.

- ► Never leave the engine or, if present, the stationary heater running in an enclosed space without sufficient ventilation.

⚠ **WARNING**
Risk of injury by becoming trapped when opening and closing a garage door

When you operate or program a garage door with an integrated garage door opener, persons can become trapped or struck by the garage door if they stand within its range of movement.

- ► Always make sure that nobody is within the range of the garage door's movement.

Before programming the garage door opener, park the vehicle outside the garage. Ensure that the vehicle is switched on but not started.

ⓘ The garage door opener function is always available when the vehicle is switched on.

D-mode: A special programming mode is required for some devices available on the market. Only use this mode if expressly stated in the program-

ming instructions in the owner's manual for the device or on the https://www.homelink.com.

UR-mode: UR-mode is a special programming mode that is only required for use with the HomeLink® universal receiver. The HomeLink® universal receiver must be purchased separately. It is required to connect incompatible garage door openers or garage doors with HomeLink®.

Electric parking brake

FUNCTION OF THE ELECTRIC PARKING BRAKE (AUTOMATIC APPLICATION)

⚠ **WARNING**
Accident- and risk of injury with unsupervised children in the vehicle

IF YOU LEAVE CHILDREN UNATTENDED IN THE VEHICLE, THEY CAN IN PARTICULAR

- Open doors and thereby endanger other persons or road users.
- get out of the car and are hit by traffic.
- Operate vehicle equipment and become trapped, forexample.

IN ADDITION, THE CHILDREN COULD ALSO SET THE VEHICLE IN MOTION, FOR EXAMPLEBY:

- releasing the parking brake.
- change the gearbox setting.
- start the vehicle.

► Never leave children unattended in the vehicle.

► When leaving the vehicle, always take the SmartKey with you and lock the vehicle.

► Keep the key out of reach of children.

This also applies to the Digital Vehicle Key.

THE ELECTRIC PARKING BRAKE IS APPLIED IF THE TRANSMISSION IS IN POSITION [P] AND ONE OF THE FOLLOWING CONDITIONS IS FULFILLED:

- The vehicle is switched off.
- The driver's seat belt is not fastened and the driver's door is opened.

ⓘ To prevent application: pull the handle of the electric parking brake (⟶ page 409).

IN THE FOLLOWING SITUATIONS, THE ELECTRIC PARKING BRAKE IS ALSO APPLIED:

- The HOLD function is keeping the vehicle stationary.
- Active Distance Assist DISTRONIC is bringing the vehicle to a standstill.
- Active Parking Assist is keeping the vehicle stationary.
- **In addition, one of the following conditions must be met:**
  - The vehicle is switched off.
  - The driver's seat belt is not fastened.
  - There is a system malfunction.
  - The power supply is insufficient.
  - The vehicle is idle for a long period.
- **Vehicles with Active Parking Assist:** The electric parking brake is also applied in the following situations:
  - Following completion of a parking procedure.
  - If an error occurs during a parking procedure.

When the electric parking brake is applied, red indicator lamp [(P)] lights up on the driver display.

ⓘ The electric parking brake is not automatically applied if the vehicle is switched off by the ECO start/stop function.

FUNCTION OF THE ELECTRIC PARKING BRAKE (AUTOMATIC RELEASE)

THE ELECTRIC PARKING BRAKE IS RELEASED WHEN THE FOLLOWING CONDITIONS ARE FULFILLED:

- The driver's door is closed.
- The vehicle has been started.
- The transmission is in position [D] or [R] and you depress the accelerator pedal, or you shift from transmission position [P] to [D] or [R] on level ground.
- If the transmission is in position [R], the boot lid must be closed.
- The driver has fastened the seat belt correctly (⟶ page 143).

  If the driver's seat belt is not fastened, the following condition must be met:
  - The transmission is shifted from park position [P] to another transmission position.

When the electric parking brake is released, red indicator lamp [(P)] on the driver display goes out.

APPLYING/RELEASING THE ELECTRIC PARKING BRAKE MANUALLY

WARNING
Accident- and risk of injury with unsupervised children in the vehicle

IF YOU LEAVE CHILDREN UNATTENDED IN THE VEHICLE, THEY CAN IN PARTICULAR

- Open doors and thereby endanger other persons or road users.
- get out of the car and are hit by traffic.
- Operate vehicle equipment and become trapped, forexample.

IN ADDITION, THE CHILDREN COULD ALSO SET THE VEHICLE IN MOTION, FOR EXAMPLEBY:

- releasing the parking brake.
- change the gearbox setting.
- start the vehicle.

► Never leave children unattended in the vehicle.

► When leaving the vehicle, always take the SmartKey with you and lock the vehicle.

► Keep the key out of reach of children.

This also applies to the Digital Vehicle Key.

APPLYING

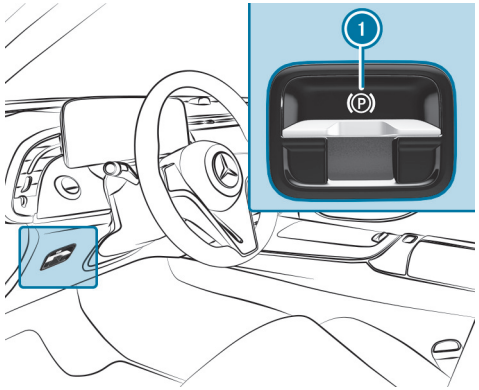

► When the vehicle is stationary, push handle (1).
Red indicator lamp [(P)] lights up on the driver display.

ⓘ The electric parking brake is only securely applied if red indicator lamp [(P)] is lit steadily.

RELEASING

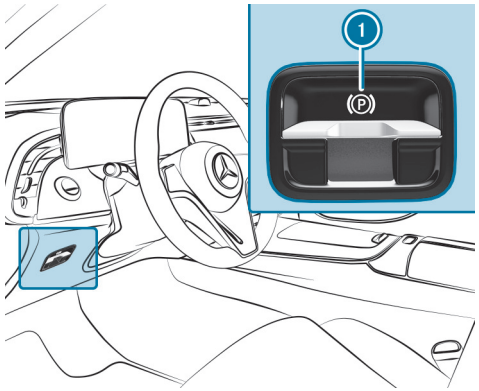

- Switch on the vehicle.
- Pull handle (1).
  Red indicator lamp (P) on the driver display goes out.

EMERGENCY BRAKING

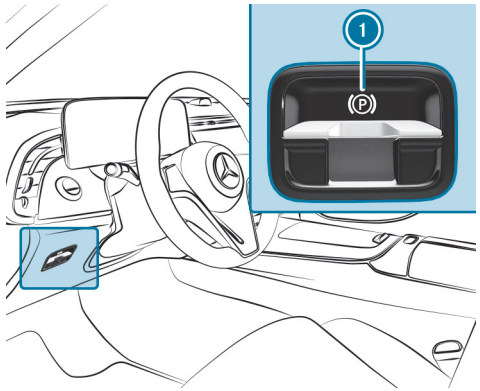

- Press and hold handle (1).
  As long as the vehicle is in motion, the message Release parking brake is displayed and the red indicator lamp (P) flashes.
  When the vehicle has been braked to a standstill, the electric parking brake is applied. Red indicator lamp (P) on the driver display lights up.

Information on collision detection for a parked vehicle

If an impact is detected with tow-away protection enabled in the vehicle and collision detection is active, a message is displayed in the multimedia system when the vehicle is switched on.

YOU WILL THEN RECEIVE INFORMATION ON THE FOLLOWING:

- The area of the vehicle that may have been damaged
- The force of the impact

THE FOLLOWING SITUATIONS CAN LEAD TO INADVERTENT ACTIVATION:

- The parked vehicle is moved, forexample in a double-decker garage.
- The locked vehicle is parked in a car wash.

ⓘ Deactivate tow-away protection to prevent inadvertent activation. If you deactivate tow-away protection, collision detection will also be deactivated.
You can permanently deactivate collision detection via the multimedia system (⟶ page 411).

SYSTEM LIMITS

DETECTION MAY BE RESTRICTED IN THE FOLLOWING SITUATIONS:

- if damage is caused to the vehicle without impact, forexample, if an outside mirror is torn off or the paint is damaged by a key
- in the event of an impact involving the other party at low speed
- if the electric parking brake is not applied

ⓘ You are responsible for your vehicle. You should therefore always ensure that your vehicle is free of damage and is roadworthy.

Setting collision detection for a parked vehicle

Multimedia system:

Settings » Vehicle » Open/close » Vehicle protection

- Activate or deactivate the function via Collision notification.

ACTIVATING OR DEACTIVATING THE COLLISION PHOTOS FUNCTION

Please note that legal restrictions regarding automatic recording of the vehicle surroundings may be in place in certain countries.

- Activate or deactivate Collision photos.

ⓘ A maximum of three incidents can be recorded. Up to 15 photos are taken for every incident. In the event of another incident, the photos from the first incident will be overwritten if they have not been deleted already.

TRANSFERRING COLLISION PHOTOS WITH THE MERCEDES-BENZ APP

- Select Upload collision photos.
- Select Upload automatically.
- Scan the QR code generated on the central display using the Mercedes-Benz app.

  The collision photos are uploaded to Mercedes-Benz in encrypted format.

ⓘ In the Mercedes-Benz app, you can view the collision photos on all devices that were used to scan the QR code.

COPYING THE COLLISION PHOTOS TO A USB FLASH DRIVE

- Connect a USB flash drive (→ page 698).
- Select Manage collision photos.
- Select Copy (USB).

  All collision photos will be copied to the USB flash drive.

ⓘ Only use FAT32 or exFAT formatted USB storage devices to ensure secure operation.

DELETING COLLISION PHOTOS

- Select Manage collision photos.
- Select Delete.

  All collision photos will be deleted.

Notes on parking up the vehicle

If you leave the vehicle parked up for longer than six weeks, it may suffer damage through disuse.

The 12 V battery may also be impaired or damaged by heavy discharging.

ⓘ Further information can be obtained at a qualified specialist workshop.

Driving and driving safety systems

Driving systems and your responsibility

Your vehicle is equipped with driving systems which assist you in driving, parking and manoeuvring the vehicle. The driving systems are only aids. They are not a substitute for you paying attention to your surroundings and do not relieve you of your responsibility pertaining to road traffic law. The driver is always responsible for maintaining a safe distance to the vehicle in front, for vehicle speed, for braking in good time and for staying in lane. Pay attention to the traffic conditions at all times and intervene when necessary. Be aware of the limitations regarding the safe use of these systems.

Driving systems can neither reduce the risk of accident if you fail to adapt your driving style nor override the laws of physics. They cannot always take into account road, weather or traffic conditions.

ⓘ Some driving systems can regulate or limit the speed to a previously set value. Draw attention to the stored speed when changing drivers.

Information on vehicle sensors and cameras

⚠ **WARNING**
Risk of accident if the detection capability of the vehicle sensors or cameras is impaired

If the areas of the vehicle sensors or cameras are obscured, damaged or dirty, some driving and driving safety systems may no longer function correctly. There is a risk of an accident.

- ► Always keep the areas of the vehicle sensors and cameras clear of obstructions and clean.
- ► Have damage to the bumpers, radiator grille or stone chipping in the area of the cameras in the windscreen repaired at a qualified specialist workshop.

Some driving and driving safety systems use cameras as well as radar or ultrasonic sensors to monitor the area in front of, behind or next to the vehicle.

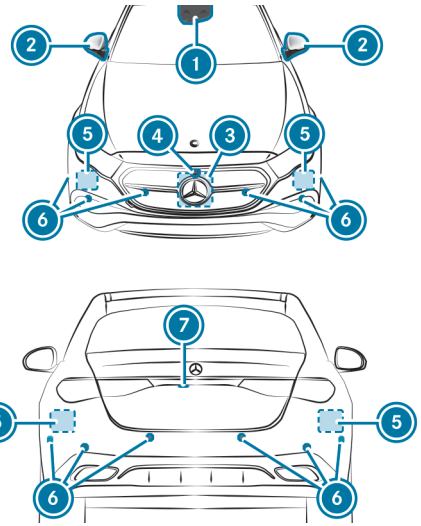

1 Multifunction camera
2 Cameras in the exterior mirrors
3 Front radar
4 Front camera
5 Corner radars
6 Ultrasonic sensors
7 Reversing camera

In particular, keep the sensor and camera areas free of dirt, ice or slush (⟶ page 731). The sensors and cameras must not be covered and the detection ranges around them must be kept free. Do not attach additional licence plate brackets, advertisements, stickers, car foils or rock chip protection films in the detection range of the sensors and cameras. Make sure there are no overhanging loads protruding into the detection range.

If there is damage to a bumper or the radiator shell, or after an impact, have the function of the sensors checked at a qualified specialist workshop.

Have damage or stone chipping in the area of the cameras in the windscreen repaired at a qualified specialist workshop.

ⓘ The reversing camera can extend and retract automatically for the purpose of calibration, even though there is no camera image on the display.

Overview of driving systems and driving safety systems

DRIVING SYSTEMS AND DRIVING SAFETY SYSTEMS

- ABS (⟶ page 414)
- BAS (⟶ page 415)
- ESP® (⟶ page 415)
- ESP® (Mercedes-AMG vehicles) (⟶ page 416)
- ESP® Crosswind Assist (⟶ page 418)
- ESP® trailer stabilisation (⟶ page 419)
- EBD (⟶ page 420)
- STEER CONTROL (⟶ page 420)
- HOLD function (⟶ page 421)
- Hill Start Assist (⟶ page 422)
- Adaptive Brake Lights (⟶ page 422)
- ATTENTION ASSIST (⟶ page 422)
- Cruise control (⟶ page 425)
- Limiter (⟶ page 425)
- Traffic Sign Assist (⟶ page 454)
- Traffic light view (⟶ page 458)

- DYNAMIC BODY CONTROL (⟶ page 466)
- AIRMATIC (⟶ page 466)
- AMG RIDE CONTROL (⟶ page 468)

DRIVING ASSISTANCE PACKAGE

- Active Distance Assist DISTRONIC (⟶ page 429)
- Active Speed Limit Assist (⟶ page 436)
- Route-based speed adaptation (⟶ page 437)
- Active Brake Assist (⟶ page 448)
- Active Steering Assist (⟶ page 439)
- Active Emergency Stop Assist (⟶ page 441)
- Active Lane Change Assist (⟶ page 443)
- Active Stop-and-Go Assist (⟶ page 438)
- Active Blind Spot Assist with exit warning (⟶ page 459)
- Active Lane Keeping Assist (⟶ page 463)
- PRE-SAFE® Impulse Side (⟶ page 151)

ⓘ The availability of some functions or partial functions of the Driving Assistance Package depends on the equipment or country. The functions of your Driving Assistance Package may differ from the functions listed here.

THE FOLLOWING DRIVING ASSISTANCE SYSTEMS ARE ALSO AVAILABLE WITHOUT THE DRIVING ASSISTANCE PACKAGE, ALBEIT WITH RESTRICTED FUNCTIONALITY:

- Active Distance Assist DISTRONIC
- Active Brake Assist
- Active Emergency Stop Assist
- Active Blind Spot Assist with exit warning
- Active Lane Keeping Assist

PARKING SYSTEMS

- Reversing camera (⟶ page 471)
- 360° camera (⟶ page 473)
- Parking Assist PARKTRONIC (⟶ page 478)
- Active Parking Assist (⟶ page 482)
- Remote Parking Assist (⟶ page 488)
- Memory Parking Assist (⟶ page 496)
- Trailer Manoeuvring Assist (⟶ page 500)

ⓘ Availability of individual functions depends on the respective equipment and country of use.

Function of ABS

THE ANTI-LOCK BRAKE SYSTEM (ABS) REGULATES THE BRAKE PRESSURE IN CRITICAL DRIVING SITUATIONS:

- During braking, for instance, at maximum full-stop braking or if there is insufficient tyre traction, the wheels are prevented from locking.
- Vehicle steerability while braking is ensured.

If ABS intervenes when braking, you will feel a pulsing in the brake pedal. The pulsating brake pedal can be an indication of hazardous road conditions and can serve as a reminder to take extra care while driving.

SYSTEM LIMITS

- ABS is active from speeds of approximately 5 km/h.

- ABS may be impaired or may not function if a malfunction has occurred and the yellow ABS warning lamp lights up continuously after the vehicle is started.

Function of BAS

WARNING
Risk of an accident caused by a malfunction in BAS (Brake Assist System)

If BAS is malfunctioning, the braking distance in an emergency braking situation is increased.

► Depress the brake pedal with full force in emergency braking situations. ABS prevents the wheels from locking.

The Brake Assist System (BAS) supports your emergency braking situation with additional brake force.

IF YOU DEPRESS THE BRAKE PEDAL QUICKLY, BAS IS ACTIVATED:

- BAS automatically boosts the brake pressure.
- BAS can shorten the braking distance.
- ABS prevents the wheels from locking.

The brakes will function as usual once you release the brake pedal. BAS is deactivated.

ESP® (Electronic Stability Program)

FUNCTION OF ESP®

CHARACTERISTICS WHEN ESP® IS ACTIVATED

THE ELECTRONIC STABILITY PROGRAM (ESP®) CAN MONITOR AND IMPROVE DRIVING STABILITY AND TRACTION IN THE FOLLOWING SITUATIONS WITHIN PHYSICAL LIMITS:

- when starting off on wet or slippery roads
- when braking

IF THE VEHICLE DEVIATES FROM THE DIRECTION DESIRED BY THE DRIVER, ESP® CAN STABILISE THE VEHICLE BY INTERVENING IN THE FOLLOWING WAYS:

- One or more wheels are individually braked.
- The engine output is adapted according to the situation.

WHEN ESP® IS DEACTIVATED, THE OFF WARNING LAMP LIGHTS UP CONTINUOUSLY:

- Driving stability will no longer be improved.
- The drive wheels could spin.
- ETS/4ETS traction control is still active.

WHEN THE WARNING LAMP FLASHES, ONE OR SEVERAL WHEELS HAS REACHED ITS GRIP LIMIT:

- Adapt your driving style to suit the current road and weather conditions.
- Do not deactivate ESP®.
- Only depress the accelerator pedal as far as is necessary when starting off.

CHARACTERISTICS WHEN ESP® IS DEACTIVATED

WARNING
Risk of skidding if ESP® is deactivated

If you deactivate ESP®, ESP® cannot carry out vehicle stabilisation.

► ESP® should only be deactivated in the following situations.

TO IMPROVE TRACTION, ESP® CAN BE SWITCHED OFF IN THE FOLLOWING SITUATIONS:

- when using snow chains
- in deep snow
- on sand or gravel

Spinning the wheels results in a cutting action, which enhances traction.

If the warning lamp lights up continuously, ESP® is not available due to a malfunction.

OBSERVE THE FOLLOWING INFORMATION:

- Indicator and warning lamps (⟶ page 968)
- Display messages (⟶ page 887)

ETS/4ETS

ETS/4ETS traction control (Electronic Traction System) is part of ESP® and makes it possible to pull away and accelerate on a slippery road.

ETS/4ETS CAN IMPROVE THE VEHICLE'S TRACTION BY INTERVENING IN THE FOLLOWING WAYS:

- The drive wheels are braked individually if they spin.
- More drive torque is transferred to the wheel or wheels with traction.

INFLUENCE OF DRIVE PROGRAMS ON ESP®

The drive programs enable ESP® to adapt to different weather and road conditions as well as the driver's preferred driving style. Depending on the selected drive program, the appropriate ESP® mode will be activated (⟶ page 349).

FUNCTION OF ESP® (MERCEDES-AMG VEHICLES)

YOU CAN SELECT BETWEEN THE FOLLOWING MODES OF THE ELECTRONIC STABILITY PROGRAM (ESP®):

- ESP® ON
- ESP® SPORT
- ESP® OFF

CHARACTERISTICS WHEN ESP® IS ACTIVATED

ESP® MONITORS AND IMPROVES DRIVING STABILITY AND TRACTION, PARTICULARLY IN THE FOLLOWING SITUATIONS:

- When starting off on wet or slippery roads.
- When braking.
- **Vehicles with trailer hitch:** in trailer operation from speeds of 65 km/h, if the vehicle/trailer combination begins to sway from side to side.
- When there is a strong crosswind and a driving speed of approximately 80 km/h to 200 km/h.

ESP® CAN STABILISE THE VEHICLE BY INTERVENING IN THE FOLLOWING WAYS:

- One or more wheels are braked.
- The drive system output is adapted according to the situation.

ESP® is activated every time the vehicle is started regardless of whether ESP® SPORT or ESP® OFF was selected before the engine was switched off.

WHEN THE WARNING LAMP FLASHES, ONE OR SEVERAL WHEELS HAS REACHED ITS GRIP LIMIT:

- Adapt the driving style to suit the prevailing road and weather conditions.
- Do not deactivate ESP® under any circumstances.
- Only depress the accelerator pedal as far as necessary when starting off.

CHARACTERISTICS OF ESP® SPORT

WARNING
Risk of skidding if ESP® SPORT is used incorrectly

When you activate ESP® SPORT, there is an increased risk of skidding and having an accident.

► Activate ESP® SPORT only in the circumstances described below.

When ESP® SPORT is selected, the warning lamps OFF and ESP SPORT light up continuously.

Select ESP® SPORT when the vehicle's own oversteering and understeering characteristics are desired, e.g. on cordoned-off roads.

Driving with ESP® SPORT or with ESP® deactivated requires an extremely qualified and experienced driver.

If ESP® SPORT is activated and one or more wheels start to spin, the warning lamp flashes. ESP® then only stabilises the vehicle to a limited degree.

ESP® SPORT ALSO HAS THE FOLLOWING CHARACTERISTICS:

- ESP® only improves driving stability to a limited degree.
- ETS/4ETS traction control is still active.
- The power of the drive system is only slightly limited according to the situation and the drive wheels can spin.

  The spinning of the wheels results in a cutting action for better traction on loose surfaces.
- ESP® continues to provide assistance when the brakes are firmly applied.
- **Vehicles with trailer hitch:** stabilisation of the vehicle/trailer combination is no longer active.
- Crosswind Assist is no longer active.

CHARACTERISTICS WHEN ESP® IS DEACTIVATED

WARNING
Risk of skidding if ESP® is deactivated

If you deactivate ESP®, ESP® cannot carry out vehicle stabilisation.

► ESP® should only be deactivated in the following situations.

When ESP® is switched off, the warning lamps OFF and ESP OFF light up continuously.

DEACTIVATING ESP® HAS THE FOLLOWING EFFECTS:

- Driving stability will no longer be improved.
- The drive wheels could spin.
- ETS/4ETS traction control is still active.
- **Vehicles with trailer hitch:** stabilisation of the vehicle/trailer combination is no longer active.
- Crosswind Assist is no longer active.

ⓘ Even when ESP® is deactivated, you are still assisted by ESP® when braking hard.

IT MAY BE BEST TO ACTIVATE ESP® SPORT OR DEACTIVATE ESP® IN THE FOLLOWING SITUATIONS:

- When using snow chains.
- In deep snow.
- On sand or gravel.

ⓘ Spinning the wheels results in a cutting action, which enhances traction.

ⓘ Activate ESP® as soon as the situations described above no longer apply. ESP® will otherwise not be able to stabilise the vehicle if the vehicle starts to skid or a wheel starts to spin.

If the warning lamp lights up continuously, ESP® is not available due to a malfunction.

OBSERVE THE DISPLAY MESSAGES AND INDICATOR AND WARNING LAMPS WHICH ARE DISPLAYED:

- Indicator and warning lamps (⟶ page 968)
- Display messages (⟶ page 887)

ETS/4ETS (ELECTRONIC TRACTION SYSTEM)

ETS/4ETS traction control is part of ESP®.

ETS/4ETS CAN IMPROVE THE VEHICLE'S TRACTION BY INTERVENING IN THE FOLLOWING WAYS:

- The drive wheels are braked individually if they spin.
- More drive torque is transferred to the wheel or wheels with traction.

FUNCTION OF ESP® CROSSWIND ASSIST

ESP® CROSSWIND ASSIST DETECTS SUDDEN GUSTS OF SIDE WIND AND HELPS THE DRIVER TO KEEP THE VEHICLE IN THE LANE:

- ESP® Crosswind Assist is active at vehicle speeds between approx. 80 km/h and 200 km/h when driving straight ahead or cornering slightly.
- The vehicle is stabilised by means of individual brake application on one side.

FUNCTION OF ESP® TRAILER STABILISATION

WARNING
Risk of accident in poor road and weather conditions

In poor road and weather conditions, the trailer stabilisation cannot prevent lurching of the vehicle/trailer combination. Trailers with a high centre of gravity may tip over before ESP® detects this.

- Always adapt your driving style to suit the current road and weather conditions.

WHEN DRIVING WITH A TRAILER, ESP® TRAILER STABILISATION CAN STABILISE YOUR VEHICLE IF THE TRAILER BEGINS TO SWERVE FROM SIDE TO SIDE:

- ESP® trailer stabilisation is active above speeds of 65 km/h .
- Slight swerving is reduced by means of a targeted, individual brake application on one side.
- In the event of severe swerving, the drive system output is also reduced and all wheels are braked.

ESP® TRAILER STABILISATION MAY BE IMPAIRED OR MAY NOT FUNCTION IF:

- The trailer is not connected correctly or is not detected properly by the vehicle.

ACTIVATING/DEACTIVATING ESP® (ELECTRONIC STABILITY PROGRAM)

Multimedia system:

- Select ESP®.
- Select On or Off.

ESP® is deactivated if the ESP® OFF warning lamp lights up continuously on the driver display.

Observe the information on the warning lamps and the display messages which may be shown on the driver display.

SETTING ESP® WITH THE AMG STEERING WHEEL BUTTON

You can also adjust ESP® via the multimedia system (→ page 354).

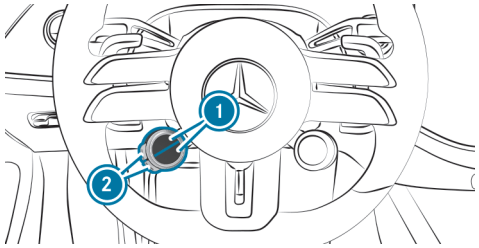

- **To adjust ESP®:** press upper or lower display button 1 repeatedly, until it displays the symbol.

If the display button does not show the symbol, then it is hidden. How functions are displayed and the order in which they are displayed can be set in the multimedia system (→ page 347).

THE ROAD COLOUR OF THE BUTTON SYMBOL INDICATES THE CURRENT SETTING:

- (blue): ESP® ON

- (yellow): ESP® SPORT
- (red): ESP® OFF

▶ **To set ESP® SPORT:** briefly press button (2) when ESP® is activated.
The road in the button symbol lights up yellow.
The and ESP SPORT warning lamps appear in the driver display.

▶ **To deactivate ESP® : set** ESP® SPORT then press and hold the button (2).
The road in the button symbol lights up red.
The and ESP OFF warning lamps appear in the driver display.

▶ **To activate® ESP:** briefly press button (2) when ESP® SPORT is selected or ESP® is deactivated.
The road in the button symbol lights up blue.
The and ESP SPORT or ESP OFF warning lamps go out.

When the symbol is shown with a red **!** on the display button, ESP® is malfunctioning. Observe the information on warning lamps and display messages which are shown in the driver display.

SETTING ESP® IN THE MULTIMEDIA SYSTEM (MERCEDES-AMG VEHICLES)
Multimedia system:
Settings » Vehicle » DYNAMIC SELECT

ⓘ Depending on the equipment, the AMG DYNAMIC SELECT menu can also be accessed via the AMG button in the centre console.

ESP® is always activated when the engine is started. The road in the button symbol lights up blue.

▶ **To set ESP® SPORT:** when ESP® is activated, briefly press to change to the Sport programme.
The road in the button symbol lights up yellow.

▶ **To switch off ESP® :** set the program ESP® SPORT and press and hold to switch off ESP®.
The road in the button symbol lights up red. The and ESP OFF warning lamps appear in the driver display.

▶ **To switch on ESP®:** in ESP® SPORT or when ESP® is switched off, briefly press .
The road in the button symbol lights up blue.
The and ESP SPORT or ESP OFF warning lamps go out.

ⓘ You can also set ESP® via the steering-wheel buttons (→ page 419).

Function of EBD

ELECTRONIC BRAKEFORCE DISTRIBUTION (EBD) IS CHARACTERISED BY THE FOLLOWING:

- Monitoring and regulating the brake pressure on the rear wheels.
- Improved driving stability when braking, especially on bends.

Function of STEER CONTROL

STEER CONTROL assists you by transmitting a noticeable steering force to the steering wheel in the direction required for vehicle stabilisation.

THIS STEERING RECOMMENDATION IS GIVEN IN THE FOLLOWING SITUATIONS:

- both right wheels or both left wheels are on a wet or slippery road surface when you brake
- the vehicle starts to skid

SYSTEM LIMITS

STEER CONTROL MAY BE IMPAIRED OR MAY NOT FUNCTION IN THE FOLLOWING SITUATIONS:

- ESP® is deactivated.
- ESP® is malfunctioning.
- The steering is malfunctioning.

If ESP® is malfunctioning, you will be assisted further by the power steering.

HOLD function

HOLD FUNCTION

The HOLD function holds the vehicle at a standstill without requiring you to depress the brake pedal, e.g. while waiting in traffic.

The HOLD function is only an aid. The responsibility for the vehicle remaining safely at a standstill lies with the driver.

SYSTEM LIMITS

The HOLD function is only intended to provide assistance when driving and is not a sufficient means of safeguarding the vehicle against rolling away when stationary.

- The gradient must not be greater than 30 %.

ACTIVATING/DEACTIVATING THE HOLD FUNCTION

⚠ **WARNING**
Risk of an accident due to the HOLD function being active when you leave the vehicle

IF THE VEHICLE IS ONLY BRAKED WITH THE HOLD FUNCTION IT COULD, IN THE FOLLOWING SITUATIONS, ROLL AWAY:

- If there is a malfunction in the system or in the power supply.
- If the HOLD function is deactivated by depressing the accelerator pedal or brake pedal, e.g. by a vehicle occupant.

► Always secure the vehicle against rolling away before you leave it.

Requirements:

- The vehicle is stationary.
- The driver's door is closed or the driver is correctly belted.
- The vehicle has been started or has been automatically switched off by the ECO start/stop function.
- The electric parking brake has been released.
- The transmission position D, R or N is engaged.

ACTIVATING THE HOLD FUNCTION

► Depress the brake pedal, and after a short time quickly depress further until the HOLD display appears on the driver display.

► Release the brake pedal.

DEACTIVATING THE HOLD FUNCTION

► Depress the accelerator pedal to start off.

or

► Depress the brake pedal until HOLD disappears from the driver display.

THE HOLD FUNCTION IS ALSO DEACTIVATED IN THE FOLLOWING SITUATIONS:

- The parking position P is engaged.
- The vehicle is secured with the electric parking brake.

IN THE FOLLOWING SITUATIONS, THE VEHICLE IS HELD BY THE PARKING POSITION P AND/OR ELECTRIC PARKING BRAKE:

- The seat belt is unfastened and the driver's door is opened.
- The vehicle is switched off.
- There is a system malfunction.
- The power supply is insufficient.

Function of Hill Start Assist

WARNING
Risk of accident and injury due to the vehicle rolling away

After a short time, Hill Start Assist no longer holds the vehicle.

► Swiftly move your foot from the brake pedal to the accelerator pedal. Do not leave the vehicle when it is being held by Hill Start Assist.

HILL START ASSIST HOLDS THE VEHICLE FOR A SHORT TIME WHEN STARTING OFF UPHILL UNDER THE FOLLOWING CONDITIONS:

- The transmission position D or R for starting off uphill is selected.
- The electric parking brake has been released.

This gives you enough time to move your foot from the brake pedal to the accelerator pedal and depress it without the vehicle rolling away immediately.

Function of Adaptive Brake Lights

ADAPTIVE BRAKE LIGHTS WARN FOLLOWING TRAFFIC IN AN EMERGENCY BRAKING SITUATION WITH THE FOLLOWING ACTIONS:

- flashing the brake lamps
- activating the hazard warning lights (⟶ page 69)

If the vehicle is braked sharply from speeds above 50 km/h, the brake lamps flash rapidly. This provides traffic travelling behind you with an even more noticeable warning.

ATTENTION ASSIST

FUNCTION OF ATTENTION ASSIST

ATTENTION ASSIST assists you on long, monotonous journeys, e.g.on motorways and trunk roads. If indicators of fatigue or increasing lapses in concentration on the part of the driver are detected, the system suggests taking a break.

ATTENTION ASSIST serves solely as an aid. It cannot always promptly detect fatigue or lapses in concentration. The system is not a substitute for a well-rested and attentive driver. On long journeys, take regular, timely breaks to allow for adequate recovery.

YOU CAN CHOOSE BETWEEN TWO SETTINGS:

- **Standard:** normal system sensitivity.
- **Sensitive:** higher system sensitivity. The driver is warned earlier and the attention level detected by ATTENTION ASSIST is adapted accordingly.

If fatigue or increasing lapses in concentration are detected, the driver display shows the warning: ATTENTION ASSIST: Take a break!. You can acknowledge the message and take a break as necessary. If you do not take a break and ATTENTION ASSIST continues to detect increasing lapses in concentration, you will be warned again after a minimum of 15 minutes.

If ATTENTION ASSIST is unable to calculate the attention level and cannot issue a warning, the System suspended message appears.

If the driver display shows a warning, the multimedia system offers to search for a rest area. You can select a rest area and start navigation to this rest area.

When you restart the vehicle, ATTENTION ASSIST is automatically switched on. The last sensitivity level selected remains stored.



THE FOLLOWING INFORMATION IS SHOWN ON THE DRIVER DISPLAY:

- Journey time since the last break
- The attention level determined by ATTENTION ASSIST:
  - The more segments of the circle (2) displayed, the higher the detected attention level.
  - Fewer segments (2) are displayed in the circle as the attention level decreases.
- Microsleep detection status (1) :
  - **Grey:** switched on, but will not issue a warning.
  - **Green:** switched on and will issue a warning.
  - **Deactivated:** display is hidden.

ⓘ Depending on the respective vehicle equipment and country of use, ATTENTION ASSIST features a distraction detection and/or microsleep detection subfunction. These functions are only available in conjunction with the driver camera.

MICROSLEEP DETECTION

If the system detects signs of microsleep using the driver camera, the warning message ATTENTION ASSIST Microsleep Take a break!, appears on the driver display and a warning tone sounds simultaneously. This warning message must be acknowledged using Touch Control. It is recommended that you take a break immediately.

If the driver does not react to the microsleep warning, an emergency stop may be initiated by the system (⟶ page 441).

DISTRACTION DETECTION

ATTENTION ASSIST can use the driver camera to detect when the driver takes their eyes off the road and is distracted as a result.

If the system detects driver distraction, the white ATTENTION ASSIST Remain alert! message appears after a few seconds and a warning tone sounds. If the driver does not return their gaze to the road, the message is displayed in yellow and a continuous warning tone sounds.

If the driver still does not react to the warning, an emergency stop can be initiated by the system (⟶ page 441).

STATUS DISPLAY OF ATTENTION ASSIST

Yellow: The microsleep detection and distraction detection subfunctions are malfunctioning. Observe the display messages.

Yellow: The system is not available. Observe the display messages.

White: The system is switched off (country-dependent).

SYSTEM LIMITS

- ATTENTION ASSIST is active in the 60 km/h to 200 km/h speed range.
- The microsleep detection and distraction detection subfunctions are available upwards of approx. 20 km/h.

THE FUNCTIONALITY OF ATTENTION ASSIST IS RESTRICTED, AND WARNINGS MAY BE DELAYED OR NOT ISSUED AT ALL IN THE FOLLOWING SITUATIONS IN PARTICULAR:

- if you have been driving for less than approximately 30 minutes
- if the road condition is poor (uneven road surface or potholes)
- if there is a strong side wind
- if you adopt a sporty driving style (high cornering speeds or high rates of acceleration)
- if the Active Steering Assist function of Active Distance Assist DISTRONIC is active
- if the clock is set to the incorrect time
- if you change lanes and vary your speed frequently in active driving situations
- if ESP® is not available

IN ADDITION, MICROSLEEP AND DISTRACTION DETECTION DO NOT FUNCTION WHEN THE DRIVER CAMERA CANNOT DETECT THE DRIVER'S EYES, FOREXAMPLE AS A RESULT OF THE FOLLOWING FACTORS:

- The driver's eyes are covered due to the steering column position, forexample.
- Poor lighting conditions.
- Certain types of spectacles or sunglasses.
- The driver's line of vision is outside the driver camera's field of vision.

Observe also the information on display messages shown on the driver display.

THE ATTENTION ASSIST DROWSINESS AND ALERTNESS ASSESSMENT IS RESET AND RESTARTED WHEN CONTINUING THE JOURNEY IN THE FOLLOWING SITUATIONS:

- If you switch off the vehicle.
- If you unfasten your seat belt and open the driver's door (e.g.to change drivers or to take a break).

SETTING ATTENTION ASSIST

Multimedia system:

Settings » Assistance » Assistance » ATTENTION ASSIST

- Activate or deactivate ATTENTION ASSIST.

SETTING THE SENSITIVITY

- Select next to ATTENTION ASSIST.
- Select Standard or Sensitive.

ATTENTION ASSIST can also be switched on or off in the Control Centre.

Cruise control and limiter

FUNCTION OF CRUISE CONTROL
Cruise control regulates the speed to the value selected by the driver.

Forexample, the stored speed is not deleted if you accelerate to overtake. If you remove your foot from the accelerator pedal after overtaking, cruise control will resume speed regulation back to the stored speed.

You can set any speed above 20 km/h up to the maximum design speed or up to the stored winter tyre limit.

Observe the notes on driving systems and your responsibility; otherwise you may fail to recognise potential dangers (⟶ page 412).

NOTIFICATIONS ON THE DRIVER DISPLAY

Grey: cruise control is selected but not yet activated or temporarily in passive mode.

Green: cruise control is activated.

A stored speed is shown below the display and is indicated in the speedometer.

SYSTEM LIMITS
Cruise control may be unable to maintain the stored speed on uphill gradients. The stored speed is resumed when the gradient evens out.

On long and steep downhill gradients, you must change down to a lower gear in good time. This is particularly important when driving a laden vehicle. You are thus making full use of the engine's braking effect. This will take some of the strain off the brake system and prevent the brakes from overheating and wearing too quickly.

DO NOT USE CRUISE CONTROL IN THE FOLLOWING SITUATIONS:

- In traffic situations which require frequent changes of speed, e.g. in heavy traffic, on winding roads.
- On slippery roads. Accelerating can cause the drive wheels to lose traction and the vehicle could then begin skidding.
- When visibility is poor.

FUNCTION OF THE LIMITER
The limiter restricts the speed of the vehicle. To reduce the speed to the stored speed, the limiter applies the brakes automatically.

YOU CAN LIMIT THE SPEED AS FOLLOWS:

- **Variable:** for short-term limitation of the travel speed, e.g. in built-up areas
- **Permanent:** for a longer-term speed restriction, e.g. in winter tyre mode

You can set any speed above 20 km/h up to the maximum design speed or up to the stored winter tyre limit. You can also adjust the settings while the vehicle is stationary if the vehicle has been started.

Observe the notes on driving systems and your responsibility; you may otherwise fail to recognise potential dangers (⟶ page 412).

NOTIFICATIONS ON THE DRIVER DISPLAY

LIM **Grey:** variable limiter is selected but not yet activated.

LIM **Flashing grey:** variable limiter is temporarily in passive mode.

LIM **Green:** variable limiter is activated.

A stored speed is shown below the display LIM and is indicated in the speedometer.

If you depress the accelerator pedal beyond the pressure point (kickdown), the variable limiter switches to passive mode. The LIM passive message appears on the driver display and the display LIM starts flashing.

THE VARIABLE LIMITER IS REACTIVATED IN THE FOLLOWING SITUATIONS:

- If the vehicle speed drops below the stored speed.
- If the stored speed is called up.
- If you store a new speed.

OPERATING CRUISE CONTROL OR THE VARIABLE LIMITER

⚠ **WARNING**
Risk of accident due to stored speed

If you call up the stored speed and this is lower than your current speed, the vehicle decelerates.

► Take into account the traffic situation before calling up the stored speed.

Requirements:

CRUISE CONTROL

- The transmission is in position D.
- The vehicle speed is at least 20 km/h.
- ESP® must be activated, but not intervening.
- Cruise control is selected.

VARIABLE LIMITER

- The variable limiter is selected.

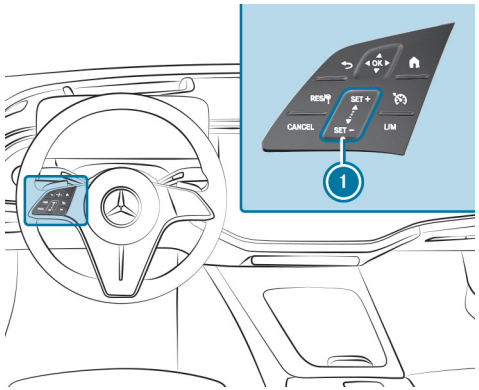

Steering wheel control panel for cruise control and variable limiter

RES	Adopts the stored/detected speed
CANCEL	Deactivates cruise control/the variable limiter
1 SET + SET -	Control panel to increase/decrease speed
	Selects cruise control
LIM	Selects the variable limiter

Operating cruise control and the variable limiter:

► Press the corresponding button with only one finger or swipe across the control panel.

Switching between cruise control and the variable limiter:

- **To select cruise control:** press [⏲].
- **To select the variable limiter:** press [LIM].

ⓘ Vehicles with Active Distance Assist DISTRONIC: the variable limiter is selected using a different button (⟶ page 432).

Activating cruise control or the variable limiter:

- Press [SET +] or [SET -] on the control panel (1).
  The current vehicle speed is stored and maintained by the vehicle via cruise control, or is restricted by the variable limiter.

or

- Press [RES].
  The last stored speed is called up and maintained by the vehicle via cruise control, or is restricted by the variable limiter.
  If the last stored speed has previously been deleted, the current vehicle speed is stored.

ⓘ When you switch off the vehicle, the last speed stored is deleted. When you activate cruise control or Active Distance Assist DISTRONIC, the last speed stored for the variable limiter is deleted.

Increasing/decreasing the stored speed:

- To increase the stored speed: swipe upwards from the bottom of the control panel (1).
  - The stored speed is increased by 1 km/h.
- To decrease the stored speed: swipe downwards from the top of the control panel (1).
  - The stored speed is decreased by 1 km/h.

or

- Briefly press [SET +] or [SET -] on the control panel (1).
  The stored speed is increased or decreased to the next increment of ten (e.g. to 50 km/h or 60 km/h).

or

- Press and hold [SET +] or [SET -] on the control panel (1).
  The stored speed is increased or decreased to the next increment of ten, and afterwards by increments of 10 km/h.

or

- Accelerate the vehicle to the desired speed.
- Press [SET +] on the control panel (1).

ⓘ When the variable limiter is switched to passive mode, you cannot increase or decrease its stored speed in increments of 1 km/h.

Adopting a detected speed:

If cruise control/the variable limiter is activated and Traffic Sign Assist has detected a traffic sign with a maximum permissible speed and this is displayed on the driver display:

- Press RES/⊕.

  The maximum permissible speed shown by the traffic sign is stored and the vehicle maintains, or does not exceed this speed.

Deactivating cruise control or the variable limiter:

- Press CANCEL.

ⓘ If you brake, deactivate ESP® or if ESP® intervenes, cruise control is deactivated. The variable limiter is not deactivated.

ⓘ When you switch off the vehicle, the last speed stored is deleted. When you select cruise control or Active Distance Assist DISTRONIC, the last speed stored for the variable limiter is deleted.

INFORMATION ON THE PERMANENT LIMITER

If the vehicle should never exceed a specific speed (e.g. for driving in winter tyre mode), you can set this speed with the permanent limiter.

You can do this by limiting the speed between 160 km/h and 240 km/h in the multimedia system (⟶ page 63).

The set speed is shown on the driver display immediately before it is reached. Confirming this message will cancel all other notifications until the vehicle is switched off again. Notifications are resumed when the vehicle is restarted or if the set speed is changed.

The permanent limiter can not be switched to passive mode even during kickdown, and the travel speed remains below the set speed.

SETTING THE SPEED LIMIT FOR WINTER TYRES

Multimedia system:

⟶ ⌂ ⏩ Settings ⏩ Vehicle ⏩ Winter tyre limit

- Activate or deactivate Winter tyre limit.

SETTING A SPEED

- Select Winter tyre limit.
- Select a speed.

Active Distance Assist DISTRONIC

FUNCTION OF ACTIVE DISTANCE ASSIST DISTRONIC

WARNING
Risk of accident from acceleration or braking by Active Distance Assist DISTRONIC

ACTIVE DISTANCE ASSIST DISTRONIC MAY ACCELERATE OR BRAKE IN THE FOLLOWING CASES, FOR EXAMPLE:

- If the vehicle pulls away using Active Distance Assist DISTRONIC.
- If the stored speed is called up and is considerably faster or slower than the currently driven speed.
- If Active Distance Assist DISTRONIC no longer detects a vehicle in front or does not react to relevant objects.

► Always carefully observe the traffic conditions and be ready to brake at all times.

► Take into account the traffic situation before calling up the stored speed.

WARNING
Risk of accident due to insufficient deceleration by Active Distance Assist DISTRONIC

Active Distance Assist DISTRONIC brakes your vehicle with up to 50% of the possible deceleration. If this deceleration is not sufficient, Active Distance Assist DISTRONIC alerts you with a visual and acoustic warning.

► Adjust your speed and maintain a suitable distance from the vehicle in front.

► Brake the vehicle yourself and/or take evasive action.

WARNING
Risk of accident if detection function of Active Distance Assist DISTRONIC is impaired

ACTIVE DISTANCE ASSIST DISTRONIC DOES NOT REACT OR HAS A LIMITED REACTION:

- when driving on a different lane or when changing lanes
- to pedestrians, animals, bicycles or stationary vehicles, or unexpected obstacles
- to complex traffic conditions
- to oncoming vehicles and crossing traffic

As a result, Active Distance Assist DISTRONIC may neither give warnings nor intervene in such situations.

► Always observe the traffic conditions carefully and react accordingly.

ⓘ Active Distance Assist DISTRONIC described for vehicles without Driving Assistance Package may be a Digital Extra (depending on the respective country of use) (⟶ page 114).

Active Distance Assist DISTRONIC maintains the set speed on free-flowing roads. If vehicles are detected ahead the set distance is maintained, if necessary until the vehicle comes to a standstill. The vehicle accelerates or brakes depending on the distance to the vehicle in front and the set speed.

The speed and distance to the vehicle in front are set and saved using the steering wheel.

AVAILABLE SPEED RANGE:

- **Vehicles without Driving Assistance Package:** 20 km/h - 160 km/h
- **Vehicles with Driving Assistance Package:** 20 km/h - 210 km/h

ⓘ The adjustable set speed may differ if a speed limit (e.g.winter tyre limit) is stored.

OTHER FEATURES OF ACTIVE DISTANCE ASSIST DISTRONIC:

- adjusts the driving style depending on the selected drive program
- initiates acceleration to the stored speed if the turn signal indicator is switched on to change to the overtaking lane
- **Vehicles with Driving Assistance Package:**
  - reacts to stationary vehicles detected in urban speed ranges (except bicycles and motorcycles)
  - takes one-sided overtaking restrictions into account on motorways or multi-lane roads with separate carriageways (country-dependent)

ⓘ It is possible to set the driving mode of Active Distance Assist DISTRONIC in the Active Distance Assist menu. Depending on the selected drive program, the driving behaviour is energy-saving, comfortable or dynamic (⟶ page 438).

Vehicles with Active Parking Assist and Driving Assistance Package: If Active Distance Assist DISTRONIC has braked the vehicle to a standstill, it can automatically follow the vehicle in front when driving off again within 30 seconds if the system detects that the driver is touching the steering wheel. If a critical situation is detected in the surrounding area when driving off, suchas

a person in the vehicle path, a visual and audible warning indicates that the driver must now take control of the vehicle. The vehicle is not accelerated any further.

Observe the notes on driving systems and your responsibility; otherwise you may fail to recognise potential dangers (⟶ page 412).

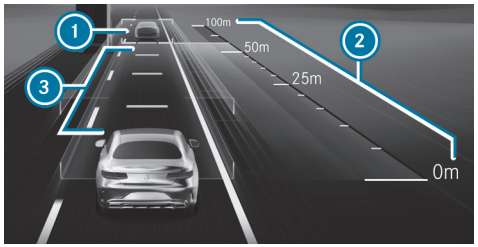

Notifications on the driver display in the Assistance menu

1 Vehicle in front
2 Distance indicator
3 Set specified distance

The vehicle detected in front 1 is highlighted in green. It may also be in the lane to the right of your vehicle in situations where it is not permitted to overtake on the left, forexample, on UK motorways.

PERMANENT STATUS DISPLAY

Grey: Active Distance Assist DISTRONIC selected but not yet active.

Green speedometer, grey vehicle: Active Distance Assist DISTRONIC active, speed set.

Green: Active Distance Assist DISTRONIC active and vehicle detected.

The stored speed is shown under the permanent status display and highlighted on the speedometer. Active Distance Assist DISTRONIC's status display is greyed out when in passive mode.

If the speed of the vehicle in front or the ascertained target speed due to the route event ahead is less than the stored speed, the segments on the speedometer light up.

If you increase or decrease the set specified distance 3, the display appears briefly.

ⓘ The green vehicle symbol is displayed cyclically when the vehicle is ready to pull away.

ⓘ If the accelerator pedal is depressed while Active Distance Assist DISTRONIC is operational, the system can be switched to passive mode. The suspended message appears briefly on the driver display.

SYSTEM LIMITS

THE SYSTEM MAY BE IMPAIRED OR INOPERATIVE IN THE FOLLOWING INSTANCES, FOREXAMPLE:

- In snow, rain, fog, heavy spray, if there is glare, in direct sunlight or in greatly varying light conditions.
- If the windscreen in the area of the camera is dirty, misted up, damaged or covered.
- If the radar sensors are dirty or covered.
- In multi-storey car parks or on roads with steep uphill or downhill gradients

- If there are narrow vehicles in front, such as bicycles or motorcycles.

In addition, one or more wheels may lose grip due to braking or acceleration on smooth or slippery roads, and the vehicle may begin skidding. If ESP® intervenes, Active Distance Assist DISTRONIC is deactivated.

Do not use Active Distance Assist DISTRONIC in these situations.

You can watch an animation on this topic via the following link:

OPERATING ACTIVE DISTANCE ASSIST DISTRONIC AND THE VARIABLE LIMITER

⚠ **WARNING**
Risk of accident if detection function of Active Distance Assist DISTRONIC is impaired

ACTIVE DISTANCE ASSIST DISTRONIC DOES NOT REACT OR HAS A LIMITED REACTION:

- when driving on a different lane or when changing lanes
- to pedestrians, animals, bicycles or stationary vehicles, or unexpected obstacles
- to complex traffic conditions
- to oncoming vehicles and crossing traffic

As a result, Active Distance Assist DISTRONIC may neither give warnings nor intervene in such situations.

► Always observe the traffic conditions carefully and react accordingly.

⚠ **WARNING**
Risk of accident from acceleration or braking by Active Distance Assist DISTRONIC

ACTIVE DISTANCE ASSIST DISTRONIC MAY ACCELERATE OR BRAKE IN THE FOLLOWING CASES, FOR EXAMPLE:

- If the vehicle pulls away using Active Distance Assist DISTRONIC.
- If the stored speed is called up and is considerably faster or slower than the currently driven speed.
- If Active Distance Assist DISTRONIC no longer detects a vehicle in front or does not react to relevant objects.

► Always carefully observe the traffic conditions and be ready to brake at all times.

► Take into account the traffic situation before calling up the stored speed.

WARNING
Risk of accident due to insufficient deceleration by Active Distance Assist DISTRONIC

Active Distance Assist DISTRONIC brakes your vehicle with up to 50% of the possible deceleration. If this deceleration is not sufficient, Active Distance Assist DISTRONIC alerts you with a visual and acoustic warning.

- ► Adjust your speed and maintain a suitable distance from the vehicle in front.
- ► Brake the vehicle yourself and/or take evasive action.

WARNING
Risk of accident due to speed adaptation via Active Speed Limit Assist

The speed limit adopted by Active Speed Limit Assist may be too high or otherwise erroneous in certain circumstances:

- with speed limits below 20 km/h
- due to weather, e.g. in wet or foggy conditions

- ► Ensure that the speed driven always complies with the traffic regulations.
- ► Adjust the speed driven to the current traffic and weather conditions.

Requirements:

ACTIVE DISTANCE ASSIST DISTRONIC:

- The electric parking brake has been released.
- ESP® is switched on and is not intervening.
- Transmission position D is engaged.
- All the doors are closed.
- Check of the radar sensor system has been successfully completed.
- Snow chain mode is not active (⟶ page 772).

VARIABLE LIMITER:

- The variable limiter is selected.

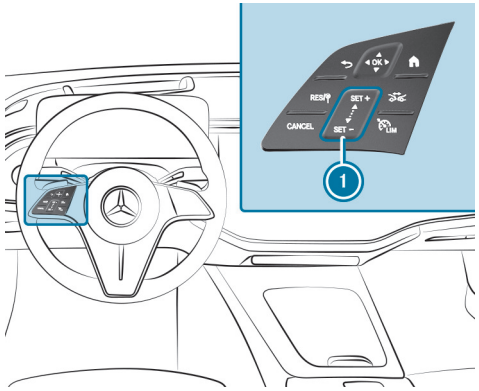

RES — Adopts the stored/detected speed
CANCEL — Deactivates Active Distance Assist DISTRONIC/variable limiter
1 SET + SET - Control panel to increase/decrease speed

Increases/decreases the specified distance

Switches between the variable limiter and Active Distance Assist DISTRONIC

► **To operate Active Distance Assist DISTRONIC or the variable limiter:** press the respective button with only one finger or swipe across the control panel.

SWITCHING BETWEEN THE VARIABLE LIMITER AND ACTIVE DISTANCE ASSIST DISTRONIC

► Press LIM.

ACTIVATING ACTIVE DISTANCE ASSIST DISTRONIC/THE VARIABLE LIMITER

► **To activate without a stored speed:** press SET +, SET - or RES. **Active Distance Assist DISTRONIC:** remove your foot from the accelerator pedal.

The current vehicle speed is stored and maintained by the vehicle via Active Distance Assist DISTRONIC or is restricted by the variable limiter.

or

► **To activate with a stored speed:** press RES. **Active Distance Assist DISTRONIC:** remove your foot from the accelerator pedal.

The last stored speed is called up and maintained by the vehicle via Active Distance Assist DISTRONIC or is restricted by the variable limiter.

If the stored speed has been deleted, the current vehicle speed is stored.

ⓘ When you switch off the vehicle, the stored speed is deleted.
When you activate Active Distance Assist DISTRONIC, the speed stored for the variable limiter is deleted.

INCREASING/DECREASING THE SPEED

► To increase the stored speed: swipe upwards from the bottom of the control panel (1).

- The stored speed is increased by 1 km/h.

► To decrease the stored speed: swipe downwards from the top of the control panel (1).

- The stored speed is decreased by 1 km/h.

or

► Briefly press the top SET + or bottom SET - of the control panel (1).

The stored speed is increased or decreased by 10 km/h.

or

► Press the top SET + or bottom SET - of the control panel (1) and hold pressed.

The stored speed is increased or decreased in 10 km/h increments.

or

► Accelerate the vehicle to the desired speed.

► Press the top SET + of the control panel (1).

ADOPTING THE SPEED RESTRICTION SHOWN ON THE DRIVER DISPLAY

► To activate Active Distance Assist DISTRONIC or the variable limiter: press SET +, SET - or RES.

► To adopt the displayed speed restriction: press RES.

The speed restriction shown on the driver display is adopted as the stored speed. The vehicle adapts its speed to that of the vehicle in front, but only up to the stored speed, or restricts its speed accordingly.

A speed restriction shown on the driver display is only adopted while driving, not when stationary.

PULLING AWAY WITH ACTIVE DISTANCE ASSIST DISTRONIC

- Activate Active Distance Assist DISTRONIC and remove your foot from the brake pedal.
- Press RES.

or

- Depress the accelerator pedal briefly and firmly.

  The functions of Active Distance Assist DISTRONIC remain active.

INCREASING/DECREASING THE SPECIFIED DISTANCE TO THE VEHICLE IN FRONT

- Press the distance button.

  The display appears. The specified distance is reduced by one level.

  If the lowest level is already selected, the selection jumps to the highest level.

DEACTIVATING ACTIVE DISTANCE ASSIST DISTRONIC/VARIABLE LIMITER

WARNING
Risk of an accident due to Active Distance Assist DISTRONIC being active when you leave the driver's seat

If you leave the driver's seat while the vehicle is being braked by Active Distance Assist DISTRONIC only, the vehicle can roll away.

- Always deactivate Active Distance Assist DISTRONIC and secure the vehicle to prevent it from rolling away before you leave the driver's seat.

- Press CANCEL.

If you brake, deactivate ESP® or if ESP® intervenes, Active Distance Assist DISTRONIC is deactivated. The variable limiter is not deactivated.

FUNCTION OF ACTIVE SPEED LIMIT ASSIST

⚠ **WARNING**
Risk of accident due to speed adaptation via Active Speed Limit Assist

The speed limit adopted by Active Speed Limit Assist may be too high or otherwise erroneous in certain circumstances:

- with speed limits below 20 km/h
- due to weather, e.g. in wet or foggy conditions

► Ensure that the speed driven always complies with the traffic regulations.

► Adjust the speed driven to the current traffic and weather conditions.

If a changed speed limit is detected and the automatic adoption of speed limits is switched on, this is automatically adopted as the stored speed (⟶ page 438). Speed limits below 20 km/h are not accepted.

Adjustment of travel speed is initiated no later than when the vehicle is level with the traffic sign. For signs indicating entry into an urban zone, the speed is adapted according to that permitted within the built-up area. The speed restriction indicator on the driver display is always refreshed when the vehicle is level with the traffic sign.

If you are driving on German motorways with no speed limit, the system uses the speed stored for a stretch of road with no speed limit as the set speed. If you do not alter the stored speed on a stretch of road with no speed limit, the recommended speed of 130 km/h is adopted.

If Active Distance Assist DISTRONIC has been switched to passive mode by pressing the accelerator pedal, only speed limits which are higher than the stored speed are adopted.

The maximum permissible speed does not take the road condition and current weather and traffic conditions into consideration. Adjust your speed accordingly when necessary.

Observe the notes on driving systems and your responsibility; you may otherwise fail to recognise potential dangers (⟶ page 412).

SYSTEM LIMITS

The system limits of Traffic Sign Assist apply to the detection of traffic signs (⟶ page 454).

Speed limits below 20 km/h are not automatically adopted by the system as the stored speed. Temporary speed restrictions (e.g. for a specific time or due to weather conditions) cannot be unequivocally detected by the system.

Adjust your speed in these situations.

You can watch an animation on this topic via the following link:

FUNCTION OF ROUTE-BASED SPEED ADAPTATION

WARNING
Risk of accident in spite of route-based speed adaptation

Route-based speed adaptation can malfunction or be temporarily unavailable in the following situations:

- If the driver does not follow the calculated route
- If map data is not up-to-date or available
- In the event of roadworks
- In bad weather or road conditions
- If the accelerator pedal is depressed
- In the event of electronically displayed speed limitations

► Adapt the speed to the traffic situation.

When Active Distance Assist DISTRONIC is activated, the vehicle speed will be adapted to the route events ahead. Depending on the drive program selected, the vehicle negotiates a route event ahead in an energy-saving, comfortable or dynamic manner. When the route event has been passed, the vehicle accelerates again to the stored speed. The set distance to the vehicle in front, vehicles detected ahead and speed restrictions ahead are taken into account.

Route-based speed adaptation can be activated in the multimedia system (⟶ page 438).

THE FOLLOWING ROUTE EVENTS ARE TAKEN INTO ACCOUNT:

- Bends
- Roundabouts
- T-junctions
- Turn-offs
- Slip roads, also on motorway service areas and rest areas
- Traffic jams ahead (only with Live Traffic) (⟶ page 637)

THE SPEED IS ALSO REDUCED IF THE TURN SIGNAL INDICATOR IS SWITCHED ON AND ONE OF THE FOLLOWING SITUATIONS IS DETECTED:

- Turning off at junctions
- Driving on slowing-down lanes
- Driving on lanes adjacent to slowing-down lanes

The driver is responsible for choosing the right speed and observing other road users. This applies in particular to junctions, roundabouts and traffic lights, as route-based speed adaptation does not brake the vehicle to a standstill.

When route guidance is active, the first speed adjustment is carried out automatically. If the turn signal indicator is switched on, the selected route is confirmed and further speed adjustment is activated.

SPEED ADJUSTMENT IS CANCELLED IN THE FOLLOWING CASES:

- if the turn signal indicator is switched off before the route event and it is presumed that the route event is not deemed relevant for the driver.
- if the driver depresses the accelerator pedal or brake pedal during the process.

SYSTEM LIMITS

Route-based speed adaptation does not take right of way regulations into account. The driver is responsible for complying with road traffic regulations and driving at a suitable speed.

IN DIFFICULT CONDITIONS, THE SPEED SELECTION MADE BY THE SYSTEM MAY NOT ALWAYS BE SUITABLE. THIS APPLIES TO THE FOLLOWING SITUATIONS, FOREXAMPLE:

- the road's course is not clearly visible
- road narrowing
- varying maximum permissible speeds in individual lanes, forexample, at toll stations
- wet road surfaces, snow or ice
- If transport equipment, e.g.a trailer or bicycle rack, is attached to the trailer hitch and the electrical connection has been correctly established

In these situations the driver must intervene accordingly.

SETTING THE DRIVING STYLE FOR ACTIVE DISTANCE ASSIST DISTRONIC

Requirements:

- Active Distance Assist DISTRONIC is activated.

Multimedia system:

Settings Assistance Driving Active Distance Assist

SELECTING A DRIVING STYLE

- Select Based on DYNAMIC SELECT, Dynamic or Comfortable.

Additional information on Active Distance Assist DISTRONIC (⟶ page 432).

SETTING SPEED ADJUSTMENT

- Select Route based or Speed limit.

  When these functions are active, the travel speed is adjusted depending on the route events ahead or in accordance with a speed limit.

IF ONE OF THE FOLLOWING SYSTEMS IS ACTIVATED, THE DETECTED SPEED CAN BE MANUALLY ADOPTED AS THE MAXIMUM PERMISSIBLE SPEED:

- Active Distance Assist DISTRONIC
- Cruise control
- Variable limiter

Additional information on speed adjustment (⟶ page 437).

FUNCTION OF ACTIVE STOP-AND-GO ASSIST

Active Stop-and-Go Assist helps you in traffic jams on multi-lane roads with separate carriageways by automatically pulling away within up to 60 seconds and with moderate steering manoeuvres. It orients itself using the vehicle in front and lane markings. Active Stop-and-Go Assist automatically maintains a safe distance from the vehicle in front and vehicles cutting in.

Active Stop-and-Go Assist requires you, as the driver, to keep your hands on the steering wheel at all times so that you can intervene at any time to correct the course of the vehicle and keep it in the lane.

Observe the notes on driving systems and your responsibility; you may otherwise fail to recognise potential dangers (⟶ page 412).

IF ALL OF THE FOLLOWING CONDITIONS ARE MET, ACTIVE STOP-AND-GO ASSIST ACTIVATES AUTOMATICALLY:

- You are in a traffic jam on a motorway or major high-speed road.
- Active Distance Assist DISTRONIC is activated and active (⟶ page 432).
- Active Brake Assist is available (⟶ page 448).
- Active Steering Assist is switched on and active (⟶ page 441).
- You are travelling no faster than 60 km/h.

When Active Stop-and-Go Assist is active, the status display appears in the driver display.

SYSTEM LIMITS
The system limits of Active Distance Assist DISTRONIC and Active Steering Assist apply to Active Stop-and-Go Assist.

Active Steering Assist

FUNCTION OF ACTIVE STEERING ASSIST

⚠ **WARNING**
Risk of accident if Active Steering Assist unexpectedly stops functioning

If the system limits of Active Steering Assist are reached there is no guarantee that the system will remain active or will keep the vehicle in lane.

► Always keep your hands on the steering wheel and observe the traffic carefully.

► Always steer the vehicle paying attention to traffic conditions.

⚠ **WARNING**
Risk of accident if Active Steering Assist unexpectedly intervenes

The detection of lane markings and objects may malfunction and cause unexpected steering interventions.

► Steer according to traffic conditions.

Active Steering Assist is available up to a speed of 210 km/h.

The system helps you to stay in the centre of the lane by means of moderate steering interventions. Depending on the vehicle speed, Active Steering Assist uses the vehicles ahead and lane markings as a reference.

ⓘ Depending on the respective country of use, Active Steering Assist can use the surrounding traffic as a reference in the lower speed range. If necessary, Active Steering Assist can also assist when driving outside the centre of the lane, forexample, to form an emergency corridor.

If the detection of lane markings and vehicles ahead is impaired, Active Steering Assist switches to passive mode. The system provides no support in this case.

STATUS DISPLAY OF ACTIVE STEERING ASSIST

Grey: activated and in passive mode

Green: activated and active

Red, flashing: prompt to the driver to actively confirm or transition from active to passive mode, system limits detected

White, red hands: "hands on the steering wheel" prompt

During the transition from active mode to passive mode, the symbol is shown as enlarged and flashing. Once the system is in passive mode, the symbol is shown as grey on the driver display.

Depending on the selected vehicle settings, Active Steering Assist may be unavailable.

STEERING AND TOUCH DETECTION

The driver is required to keep their hands on the steering wheel at all times to ensure that they can intervene at any time to correct the course of the vehicle and keep it in lane. The driver must anticipate a change from active mode to passive mode or vice versa at any time.



If the system detects that the driver has not steered the vehicle for a considerable period of time or has removed their hands from the steering wheel, an initial visual warning is issued. The notification 1 appears on the driver display. If the driver still does not steer the vehicle, or gives no confirmation to the system, a repetitive warning tone sounds in addition to the visual warning message.

If the driver does not react to this warning for a considerable period, an emergency stop may be initiated (→ page 441).

The warning is not issued or stops as soon as the system detects the driver touching or steering the steering wheel.

The touch detection may be limited or inoperative if there is no direct contact between the hand and the steering wheel, e.g. when wearing gloves or if there is a steering wheel cover on the steering wheel.

If Active Steering Assist detects that a system limit has been reached, a visual warning is issued and a warning tone sounds.

Observe the notes on driving systems and your responsibility; otherwise you may fail to recognise potential dangers (→ page 412).

SYSTEM LIMITS

Active Steering Assist has a limited steering torque for lateral guidance. In some cases, the steering intervention is not sufficient to keep the vehicle in the lane or to drive through exits.

THE SYSTEM MAY BE IMPAIRED OR INOPERATIVE IN THE FOLLOWING SITUATIONS:

- There is poor visibility, e.g. due to snow, rain, fog, heavy spray, greatly varying light conditions or dense shadows on the carriageway.
- There is glare, e.g. from oncoming traffic, direct sunlight or reflections.
- If there is insufficient road illumination.
- The windscreen is dirty, misted up, damaged or covered in the vicinity of the camera, e.g. by a sticker.
- If there are no lane markings in a given lane, or the markings are not easily discernible or change quickly, forexample, in a construction area or at junctions.
- If the lane markings are worn away, dark or covered up, e.g. by dirt or snow.
- If the distance to the vehicle in front is too short and the lane markings can therefore not be detected.

- If the roadway is narrow and winding.
- If there are obstacles on the lane or projecting out into the lane, suchas object markers.
- If transport equipment, e.g. a trailer or bicycle rack, is attached to the trailer hitch and the electrical connection has been correctly established.

THE SYSTEM DOES NOT PROVIDE ASSISTANCE IN THE FOLLOWING CONDITIONS:

- in very tight bends and when turning
- when crossing junctions
- at roundabouts or toll stations
- when actively changing lane without switching on the turn signal indicator
- when the tyre pressure is too low

You can watch an animation on this topic via the following link:

ACTIVATING/DEACTIVATING ACTIVE STEERING ASSIST

Requirements:

- ESP® is activated, but is not intervening.
- Active Distance Assist DISTRONIC is activated.

Multimedia system:

→ Settings » Assistance » Driving

▶ Activate or deactivate Active Steering Assist.

Function of Active Emergency Stop Assist

Active Emergency Stop Assist monitors the steering wheel, as well as the accelerator and brake pedals. If the system detects a lack of driver activity or the vehicle is in danger of leaving the lane, a warning may be issued and an emergency stop initiated.

Vehicles without Driving Assistance Package: the system is available from a speed of approx. 60 km/h.

Vehicles with Driving Assistance package: if Active Steering Assist is switched off, the system is available from a speed of approx. 60 km/h.

IF THE VEHICLE IS IN DANGER OF LEAVING THE LANE, A WARNING IS ISSUED IN THE FOLLOWING INSTANCES.

- The driver has not touched the steering wheel for a while, or no steering movement is detected for a while (depending on the respective vehicle equipment).
- Neither the accelerator pedal nor the brake pedal is depressed.

ⓘ **Vehicles with Driving Assistance package:** If Active Steering Assist is switched on and active, the system only monitors the steering wheel. If the driver has not touched the steering wheel for a certain period of time, a warning may be issued despite pedal actuation.
Observe also the instructions on touch detection of Active Steering Assist. (→ page 439)

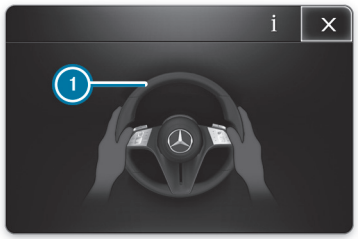

ACTIVE EMERGENCY STOP ASSIST ISSUES THE FOLLOWING WARNINGS IN SUCCESSION:

- The notification (1) appears on the driver display.
- In addition to the notification (1), a warning tone sounds.
- The Emergency stop initiated To cancel: operate steering wheel and a pedal message appears on the driver display, a continuous warning tone sounds and the vehicle will no longer accelerate. A slight tensioning of the belt will also be generated as required.
- The vehicle speed is reduced in increments until the vehicle comes to a standstill. This generates jerky braking impulses.

ⓘ **Vehicles with Driving Assistance Package:** If Active Distance Assist DISTRONIC is active and the driver unfastens the seat belt and opens the driver's door, an emergency stop can be initiated immediately.

Vehicles with Driving Assistance package: If possible, a lane change to the adjacent lane is performed (country-dependent). A lane change is only possible across one lane, and only to the outermost lane, not to the hard shoulder.

When automatic braking is initiated, Active Distance Assist DISTRONIC is deactivated. Depending on the respective country of use, the hazard warning light system is also switched on.

WHEN THE VEHICLE HAS SLOWED TO A STANDSTILL:

- the vehicle is secured with the electric parking brake.
- the vehicle is unlocked.
- if possible, an emergency call is made to the Mercedes-Benz emergency call centre.

Before automatic braking is initiated, you can cancel Active Emergency Stop Assist by turning the steering wheel.

YOU CAN CANCEL AN INTERVENTION BY ACTIVE EMERGENCY STOP ASSIST AFTER AUTOMATIC BRAKING IS INITIATED BY PERFORMING ONE OF THE FOLLOWING ACTIONS:

- Accelerating or braking: braking is cancelled, but the warning message, warning tone and electric power steering remain active.
- Steering: electric power steering is cancelled, the warning message and warning tone remain active and the vehicle continues to be braked.

ⓘ Active Emergency Stop Assist can initiate an emergency stop a maximum of three times within a driving cycle. After that, Active Steering Assist and Active Emergency Stop Assist are disabled until the vehicle has been restarted.

SYSTEM LIMITS

FOR THE DETECTION OF VEHICLES AND OTHER OBSTACLES, OBSERVE THE SYSTEM LIMITS OF THE FOLLOWING FUNCTIONS:

- Active Distance Assist DISTRONIC (⟶ page 429)
- Active Steering Assist (⟶ page 439)
- Active Lane Change Assist (⟶ page 443)
- Active Lane Keeping Assist (⟶ page 463)
- Active Brake Assist (⟶ page 448)

Vehicles without Driving Assistance Package:

ACTIVE EMERGENCY STOP ASSIST IS INACTIVE IN THE FOLLOWING CASES:

- Active Lane Keeping Assist has reached a system limit.
- Active Lane Keeping Assist is switched off (white status display).
- Active Lane Keeping Assist is not ready (grey status display).

Active Lane Change Assist

FUNCTION OF ACTIVE LANE CHANGE ASSIST

⚠ **WARNING**
Risk of accident when changing lanes into an occupied adjacent lane

Active Lane Change Assist can not always clearly determine whether the adjacent lane is free, in particular if vehicles are approaching at speeds which differ greatly to that of your own vehicle, or in the case of narrow vehicles, suchas motorcycles.

A lane change can be initiated even if the adjacent lane is occupied.

► Ensure before initiating the lane change that the adjacent lane is clear, and that the action does not pose any danger to other road users.

► Pay attention to other road users when changing lanes.

WARNING
Risk of accident due to abrupt failure of the Active Lane Change Assist function

If the system limits for Active Lane Change Assist are reached, it can not be guaranteed that the system remains active.

Active Lane Change Assist will then no longer provide any ancillary steering torque.

► Always perform and monitor the lane change with your hands on the steering wheel. Pay attention to the surrounding traffic conditions and intervene as required by steering and/or braking.

Active Lane Change Assist is activated via the turn signal indicator, and supports the driver when changing lanes by applying steering torque.

THE FOLLOWING CONDITIONS MUST BE MET FOR THIS FUNCTION:

- You are driving on a motorway or on a main road similar to a motorway.
- The travel speed is between approximately 80 km/h and 180 km/h.
- A dashed boundary marking separates the adjacent lane.
- No vehicle or obstacle is detected in the adjacent lane.
- The sensors have detected a vehicle with sufficient distance behind your own vehicle once since the last vehicle start.
- Active Lane Change Assist is switched on in the multimedia system (⟶ page 448).
- Active Distance Assist DISTRONIC and Active Steering Assist are activated on the motorway.

THE SYSTEM IS NOT AVAILABLE AND MUST BE REACTIVATED IF:

- Active Distance Assist DISTRONIC and Active Steering Assist were already activated before the vehicle entered the motorway.
- The system briefly no longer recognises the road being travelled on as a motorway or a main road similar to a motorway, e.g. at a motorway junction.

As soon as Active Lane Change Assist detects a suitable road again, you can reactivate it using the buttons RES, SET + or SET -.

Depending on the respective country of use, Active Lane Change Assist activates again automatically. The message Indicating briefly starts lane change is then shown on the driver display.



Notifications on the driver display in the Assistance menu

1 Green arrow: lane change initiated
2 Red arrow: lane change cancelled

If Active Lane Change Assist is available, the notification appears with green arrows on the driver display. If the system has been activated but is

not currently available, the notification appears with grey arrows on the driver display.

If no vehicle or obstacle is detected in the adjacent lane and a lane change is permitted, the lane change is initiated as soon as the driver activates the turn signal indicator. The lane change is indicated to the driver by a green flashing arrow next to the steering wheel symbol . In the Assistance menu, a green arrow (1) indicating the respective adjacent lane appears on the driver display. The message Lane change to the left, for example, also appears.

ACTIVE LANE CHANGE ASSIST CAN BE CANCELLED IN THE FOLLOWING SITUATIONS, FOR EXAMPLE:

- The environmental conditions change (e.g. obstacle detected).
- The driver takes their hands off the steering wheel.
- The driver steers too vigorously or steers in the opposite direction.
- The driver switches on the turn signal indicator in the opposite direction.
- Active Distance Assist DISTRONIC or Active Steering Assist is deactivated.
- The lane change cannot be executed by the vehicle as intended.

CANCELLATION OF ACTIVE LANE CHANGE ASSIST IS DISPLAYED AS FOLLOWS:

- The arrow in the selected direction of travel turns red.
- A corresponding message appears on the driver display.
- In certain circumstances, a warning tone sounds.

AUTOMATIC LANE CHANGE

WARNING
Risk of accident due to incorrectly executed lane change

The system can initiate a lane change, despite the traffic situation being unsuitable or if the adjacent lane is not available, is unusable or is occupied.

- ► Monitor the traffic conditions at all times.
- ► Cancelling the lane change as necessitated: grip the steering wheel or perform a light countersteering action and guide the vehicle back into its own lane.

WARNING
Risk of accident due to incomplete lane change or failure to initiate a lane change

The system may not always clearly determine all situations in which a lane change is practical or necessary (e.g. the lane coming to an end).

In this case, no automatic lane change is initiated or is initiated too late and/or cancelled.

- ► Monitor the traffic conditions at all times.
- ► Execute the lane change independently or implement preventative actions as required.

Automatic lane change is a sub-function of Active Lane Change Assist. It can assist the driver in deciding when a lane change is appropriate, as well as its subsequent execution.

You can cancel a lane change initiated by the system at any time by holding the steering wheel or countersteering slightly and returning the vehicle to its lane.

THE FOLLOWING CONDITIONS MUST BE FULFILLED FOR AN AUTOMATIC LANE CHANGE:

- The conditions for activating Active Lane Change Assist are fulfilled.
- Automatic lane change is switched on in the multimedia system (⟶ page 448).
- Your hands are on the steering wheel.
- You are driving on a motorway or on a main road similar to a motorway, in a country for which this function is approved.
- The road currently being travelled allows lane changes. There are no tight bends, forexample.
- The travel speed is between approximately 80 km/h and 140 km/h.

ⓘ If you are not in a country for which this function is approved, the menu item for automatic lane change will not be available in the multimedia system.

ACTIVE LANE CHANGE ASSIST CAN INITIATE AN AUTOMATIC LANE CHANGE IN THE FOLLOWING SITUATIONS, FOR EXAMPLE:

- The set desired speed for Active Distance Assist DISTRONIC cannot be reached due to a slower vehicle in front.
- There is little traffic, and the set desired speed for Active Distance Assist DISTRONIC can also be achieved in a slower lane.
- A lane change is necessary for the route entered in the navigation system or the road currently being navigated to be followed. The lane change can already take place before the prompt to do so appears in the navigation system.
- The system detects that the lane being travelled in is about to end.

IN THE FOLLOWING SITUATIONS IN PARTICULAR, ACTIVE LANE CHANGE ASSIST DOES NOT PERFORM AN AUTOMATIC LANE CHANGE:

- If the vehicle is already in a lane which should be used to follow the route entered in the navigation system.
- The system detects that the adjacent lane is about to end.
- If the driver has cancelled an automatic lane change, no lane change will be initiated in this direction for a certain period of time. The automatic lane change is then temporarily switched to passive mode for this direction.
- If the driver has initiated a lane change in a given direction or has changed lanes themselves, no lane change is initiated in the opposite direction for a certain period of time. The automatic lane change is then temporarily switched to passive mode for this direction.

The same cancellation conditions apply to the automatic lane change as to the lane change initiated by the driver with Active Lane Change Assist.

IN ADDITION, THE AUTOMATIC LANE CHANGE CAN BE CANCELLED UNDER THE FOLLOWING CIRCUMSTANCES IN PARTICULAR:

- During the lane change, the system detects a construction site separated by traffic cones, in its own or in the adjacent lane.
- The system recognises that the reason for a lane change no longer exists.
- The driver removes their hands from the steering wheel during the lane change.

NOTIFICATIONS ON THE DRIVER DISPLAY
If the automatic lane change is available, in place of the notification, the notification appears in green.

If the automatic lane change is available, but not all conditions for activation of the function are currently fulfilled, the **A**- symbols are shown in grey. In certain countries, only one **A** can be shown in grey. The automatic lane change is then temporarily switched to passive mode for this direction. This will be implemented, forexample, if the driver has cancelled an automatic lane change or has initiated a lane change themselves.

If the system deems a lane change appropriate and has to adjust the travel speed accordingly, the green **A** flashes on the side to which a lane change is to take place.

When the automatic lane change is initiated, the driver display shows a vehicle with an arrow pointing to the adjacent lane to which the lane change is to take place, and a warning tone sounds. In addition, the reason for a lane change, forexample an overtaking manoeuvre, may be shown.

If the automatic lane change is cancelled, on the display, the **A** on the side towards which a lane change was to take place is shown in red. Under certain circumstances, warning messages may also be displayed and an additional warning tone sounded.

You can watch an animation on this topic via the following link:

SYSTEM LIMITS
For Active Lane Change Assist, the system limits of Active Steering Assist apply (⟶ page 439).

IN ADDITION, THE SYSTEM MAY BE IMPAIRED OR INOPERATIVE IN THE FOLLOWING SITUATIONS:

- The sensors are damaged, covered or dirty (⟶ page 412).
- The exterior lighting indicates a defect.
- The system does not recognise a suitable road, e.g. in narrow bends or shortly after a slip road.
- The vehicle is within a construction site.

AUTOMATIC LANE CHANGE MAY BE INOPERATIVE OR IMPAIRED IN THE FOLLOWING SITUATIONS IN PARTICULAR, AND MAY LEAD TO LANE CHANGES BEING INITIATED INCORRECTLY:

- The vehicle is in front of or within a construction site and/or the system has detected a construction site separated by traffic cones.
- The vehicle is within a section with temporary lane closures or lane openings.
- The system can no longer detect the lane marking correctly.
- It is raining heavily.
- Another vehicle changes to the same lane simultaneously, e.g. incoming traffic from slip roads.

ⓘ Active Lane Change Assist sensors adjust automatically while a certain distance is being driven after the vehicle has been delivered. Active Lane Change Assist is unavailable during this teach-in process, and no arrows are displayed next to the Active Steering Assist symbol.

Observe the notes on driving systems and your responsibility; you may otherwise fail to recognise potential dangers (⟶ page 412).

SETTING ACTIVE LANE CHANGE ASSIST

Multimedia system:

Settings » Assistance » Driving » Active Lane Change Assist

ACTIVE LANE CHANGE ASSIST WITHOUT AUTOMATIC LANE CHANGE

► Select between the On or Off setting options.

ⓘ If the Active Steering Assist was switched off, then the Active Lane Change Assist cannot be operated.

ACTIVE LANE CHANGE ASSIST WITH AUTOMATIC LANE CHANGE

► Manual triggering Select from the setting options Off or Manual and automatic triggering.

ⓘ If the Active Steering Assist was switched off, then the Active Lane Change Assist cannot be operated.

ⓘ Alternatively, automatic Lane Change Assist can be activated or deactivated in the quick-access menu.

ⓘ Further information on automatic lane change (⟶ page 443).

Active Brake Assist

FUNCTION OF ACTIVE BRAKE ASSIST

⚠ **WARNING**
Risk of an accident caused by limited detection performance of Active Brake Assist

Active Brake Assist cannot always clearly identify objects and complex traffic situations.

IN SUCH CASES, ACTIVE BRAKE ASSIST MIGHT:

- Give a warning or brake without reason
- Not give a warning or not brake

Active Brake Assist is only an aid. The driver is responsible for maintaining a sufficiently safe distance to the vehicle in front, vehicle speed and for braking in good time.

► Always pay careful attention to the traffic situation; do not rely on Active Brake Assist alone.

► Be prepared to brake or swerve if necessary.

ACTIVE BRAKE ASSIST CONSISTS OF THE FOLLOWING FUNCTIONS:

- Distance warning function
- Collision warning
- Autonomous braking function
- Situation-based brake force boosting
- Sideguard Assist

- **Vehicles with Driving Assistance Package and Active Steering Assist (country-dependent):** Evasive Steering Assist
- **Vehicles with Driving Assistance Package:** Intersection start-off function

Active Brake Assist can help you to minimise the risk of a collision with vehicles, cyclists or pedestrians or to reduce the effects of such a collision.

If Active Brake Assist has detected a risk of collision, a warning tone sounds and the distance warning lamp lights up.

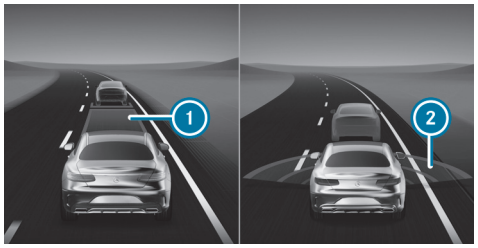

Notification on the driver display in the menu Assistance

1 Distance insufficient
2 Red radar waves

In the Assistance menu, an insufficient distance to the vehicle in front 1 is displayed in red. If you further reduce the distance, the vehicle in front is also highlighted in red. When the system detects a risk of collision, red radar waves 2 appear in front of your vehicle.

Vehicles with PRE-SAFE®: depending on the country, an additional haptic warning is given in the form of slight, repeated seat belt tensioning on the driver's side.

Vehicles with active ambient lighting: If Warning assistance is switched on, the warning by Active Brake Assist is reinforced by the ambient lighting (⟶ page 292).

If you do not react to the warning, autonomous braking can be initiated in critical situations.

In particularly critical situations, Active Brake Assist can also initiate autonomous braking directly. In this case, the warning tone and the distance warning lamp are simultaneous with the braking action.

If you apply the brakes yourself in a critical situation or apply the brakes during autonomous braking, situation-dependent brake force boosting occurs. The brake pressure increases up to maximum full-stop braking if necessary.

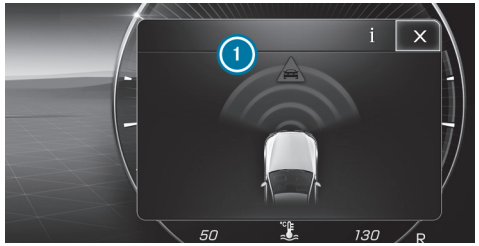

1 If autonomous braking or situation-dependent brake force boosting has occurred, the pop-up appears in the driver display and then automatically disappears after a short time.

If the autonomous braking function or the situation-based brake force boosting is triggered, additional preventive measures for occupant protection by PRE-SAFE® may also be initiated.

If Active Brake Assist is deactivated or the functions are restricted, e.g. due to activation of another driving system, the OFF Active Brake Assist warning lamp appears in the driver display.

If the system is unavailable due to soiled or damaged sensors or a fault, or if the functions are restricted, the Active Brake Assist warning lamp appears on the driver display.

Also observe the system limits of Active Brake Assist.

The individual subfunctions are available in the following speed ranges.

DISTANCE WARNING FUNCTION

From approximately 30 km/h, you are warned by the distance warning function if the safety distance to the vehicle travelling ahead is insufficient at the current speed for several seconds. In this case, the distance warning lamp on the driver display lights up. If the distance to the vehicle ahead continues to decrease at higher speeds, the distance warning lamp begins to flash.

COLLISION WARNING

The collision warning function can assist you in the following situations from approximately 7 km/h with an intermittent warning tone and the distance warning lamp.

VEHICLES WITHOUT DRIVING ASSISTANCE PACKAGE:

- at speeds up to approximately 250 km/h when approaching moving vehicles ahead
- at speeds up to approximately 80 km/h when approaching stationary vehicles, pedestrians walking along the road and moving cyclists ahead
- at speeds up to approximately 70 km/h when approaching crossing pedestrians and cyclists
- at speeds up to approximately 60 km/h when approaching stationary pedestrians and cyclists

VEHICLES WITH DRIVING ASSISTANCE PACKAGE:

- at speeds up to approximately 250 km/h when approaching moving vehicles ahead
- at speeds up to approximately 120 km/h when approaching crossing vehicles, pedestrians and cyclists
- at speeds up to approximately 100 km/h when approaching stationary vehicles
- at speeds up to approximately 80 km/h when approaching moving cyclists ahead
- at speeds up to approximately 70 km/h when approaching stationary pedestrians and cyclists

AUTONOMOUS BRAKING FUNCTION

From a speed of approximately 7 km/h, the autonomous braking function can intervene in the following situations.

VEHICLES WITHOUT DRIVING ASSISTANCE PACKAGE:

- at speeds up to approximately 250 km/h when approaching moving vehicles ahead
- at speeds up to approximately 80 km/h when approaching moving cyclists ahead, pedestrians walking along the road and stationary vehicles
- at speeds up to approximately 70 km/h when approaching crossing pedestrians and cyclists

VEHICLES WITH DRIVING ASSISTANCE PACKAGE:

- at speeds up to approximately 250 km/h when approaching moving vehicles ahead
- at speeds up to approximately 120 km/h when approaching crossing vehicles, pedestrians and cyclists

- at speeds up to approximately 100 km/h when approaching stationary vehicles
- at speeds up to approximately 80 km/h when approaching moving cyclists ahead
- at speeds up to approximately 70 km/h when approaching stationary pedestrians and cyclists

SITUATION-BASED BRAKE FORCE BOOSTING

From a speed of approximately 7 km/h, situation-related brake force boosting can intervene in the following situations.

VEHICLES WITHOUT DRIVING ASSISTANCE PACKAGE:

- at speeds up to approximately 250 km/h when approaching moving vehicles ahead
- at speeds up to approximately 80 km/h when approaching moving cyclists ahead, pedestrians walking along the road and stationary vehicles
- at speeds up to approximately 70 km/h when approaching crossing pedestrians and cyclists
- at speeds up to approximately 60 km/h when approaching stationary pedestrians and cyclists

VEHICLES WITH DRIVING ASSISTANCE PACKAGE:

- at speeds up to approximately 250 km/h when approaching moving vehicles ahead
- at speeds up to approximately 120 km/h when approaching crossing vehicles, pedestrians and cyclists
- at speeds up to approximately 100 km/h when approaching stationary vehicles
- at speeds up to approximately 80 km/h when approaching moving cyclists ahead
- at speeds up to approximately 70 km/h when approaching stationary pedestrians and cyclists

CANCELLING A BRAKING INTERVENTION BY ACTIVE BRAKE ASSIST

YOU CAN CANCEL A BRAKE APPLICATION OF ACTIVE BRAKE ASSIST AT ANY TIME BY:

- Fully depressing the accelerator pedal or with kickdown
- Releasing the brake pedal

ACTIVE BRAKE ASSIST MAY CANCEL THE BRAKING INTERVENTION WHEN ONE OF THE FOLLOWING CONDITIONS IS FULFILLED:

- You steer to avoid an obstacle.
- There is no longer a risk of collision.
- An obstacle is no longer detected in front of your vehicle.

REACTION TO ONCOMING ROAD USERS (ONLY VEHICLES WITH DRIVING ASSISTANCE PACKAGE)

ACTIVE BRAKE ASSIST CAN ALSO REACT TO DETECTED ONCOMING ROAD USERS:

- Reaction up to a speed of approximately 100 km/h
- Warning of oncoming road users through the warning tone and the  distance warning lamp
- Autonomous braking application in order to reduce the severity of an accident

TURNING MANOEUVRE FUNCTION

If the system detects a risk of collision with oncoming road users when you turn off across the opposite carriageway at speeds up to approximately 20 km/h, autonomous braking can be initiated.

INTERSECTION START-OFF FUNCTION (ONLY VEHICLES WITH DRIVING ASSISTANCE PACKAGE)

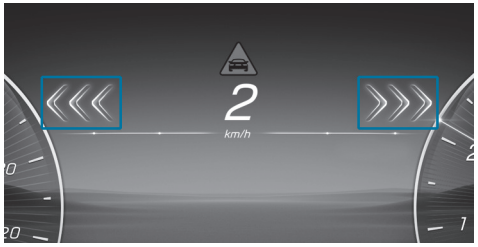

If a risk of collision with crossing traffic is detected when moving off or at walking pace, three red arrows consecutively light up in the driver display in the direction of the crossing road user, together with the distance warning lamp. If the situation is particularly critical, the arrows begin to flash. A warning tone will also sound. If you do not react to the warning, acceleration can be restricted or autonomous braking can be initiated in critical situations. The autonomous braking can also prevent you from moving off and keep the vehicle stationary. In particularly critical situations, Active Brake Assist can also initiate autonomous braking directly. In this case, the distance warning lamp and the warning tone occur simultaneously with the braking action.

If autonomous braking or situation-dependent brake force boosting has occurred, a pop-up appears in the driver display and automatically disappears after a short time.

If Active Brake Assist is set to Late the purely visual warning stage and restriction of acceleration are deactivated. If the situation is particularly critical, there can still be a visual warning, a warning tone and initiation of autonomous braking.

EVASIVE STEERING ASSIST

WARNING
Risk of accident despite Evasive Steering Assist

Evasive Steering Assist cannot always recognise objects or complex traffic situations clearly.

Moreover, the steering support provided by Evasive Steering Assist is not sufficient to avoid a collision.

- ► Always pay careful attention to the traffic situation; do not rely on Evasive Steering Assist alone.
- ► Be prepared to brake or swerve if necessary.
- ► End the support by actively steering in non-critical situations.
- ► Drive at an appropriate speed if there are pedestrians close to the path of your vehicle.

EVASIVE STEERING ASSIST HAS THE FOLLOWING FEATURES:

- Detection of pedestrians, cyclists and vehicles
- Help through additional steering assistance if it detects an evasive manoeuvre
- Activation by an abrupt steering movement during an evasive manoeuvre
- Assistance in taking evasive action, and straightening of the vehicle
- Reaction from a speed of approximately 20 km/h up to a speed of approximately 110 km/h

The steering support of Evasive Steering Assist can be cancelled at any time by counter steering.

SYSTEM LIMITS

Full system performance is not yet available for a short time after switching on the vehicle or after driving off. As long as the functions are restricted, the Active Brake Assist warning lamp can also be shown in the driver display. Depending on the environmental conditions, it may take a few minutes before full system performance is available.

THE SYSTEM MAY BE IMPAIRED OR MAY NOT FUNCTION, PARTICULARLY IN THE FOLLOWING SITUATIONS:

- In snow, rain, fog, heavy spray, glare, in direct sunlight or in varying light conditions
- If the sensors are dirty, misted up, damaged or covered (⟶ page 412).
- If the sensors are impaired due to interference from other radar sources, e.g. strong radar reflections in multi-storey car parks
- If a loss of tyre pressure or a defective tyre has been detected and displayed
- In complex traffic situations where objects cannot always be clearly identified
- If pedestrians, cyclists or vehicles move quickly into the sensor detection range
- If road users are hidden by other objects or are located close to other objects
- If the typical outline of a pedestrian or cyclist cannot be distinguished from the background
- If a pedestrian or cyclist is not detected as such, e.g. due to special clothing or other objects
- If the driver's seat belt is not fastened
- On bends with a tight radius

You can watch an animation on this topic via the following link:

SETTING ACTIVE BRAKE ASSIST

Requirements:

- The vehicle is switched on.

Multimedia system:

Settings » Assistance » Collision avoidance

▶ Activate or deactivate the function.

ⓘ Availability of the function is dependent on the respective country.

ⓘ It is recommended that you always leave Active Brake Assist activated.

When switching off the Active Brake Assist, the distance warning function, the collision warning, the autonomous braking function and the Active Evasive Steering Assist are switched off.

ⓘ If Active Brake Assist is deactivated, the OFF symbol appears on the status bar of the driver display. Depending on the country and vehicle's equipment, the system will be switched back on when the vehicle is next started.

ⓘ The setting after starting the vehicle depends on the country.

SETTING WARNING TIMING

- Select ⚙ alongside Active Brake Assist.
- Select Early, Medium or Late.

ⓘ If the ATTENTION ASSIST has detected signs of fatigue or a microsleep, depending on the country, the system can issue a warning earlier than set. Further information about ATTENTION ASSIST (⟶ page 422).

Traffic Sign Assist

FUNCTION OF TRAFFIC SIGN ASSIST

ⓘ This function can be a Digital Extra (⟶ page 114).

Traffic Sign Assist detects traffic signs with the multifunction camera and compares them with information from the digital road map of the navigation system. It supports you by showing detected speed limits and no-overtaking zones on the driver display.

Speed limits can also be shown on the head-up display.

The system can issue a warning when you exceed the maximum permissible speed.

In some countries, the system can provide you with additional functions and can warn you when you are approaching pedestrian crossings or when you are about to drive past stop signs or red traffic lights unintentionally.

The camera also detects and evaluates traffic signs with a restriction indicated by an additional sign (e.g.in wet conditions).

Traffic Sign Assist only shows selected signs on the driver display. Actual traffic signs and speed limits are always prioritised over traffic signs and speed limits shown on the driver display.

THE FOLLOWING SHOULD ALSO BE OBSERVED WHEN USING TRAFFIC SIGN ASSIST:

- Select a speed suitable for the traffic, surroundings and weather conditions.
- Observe actual traffic signs.
- Observe applicable traffic rules and regulations.

Observe the notes on driving systems and your responsibility; otherwise you may fail to recognise potential dangers (⟶ page 412).

NOTIFICATIONS ON THE DRIVER DISPLAY

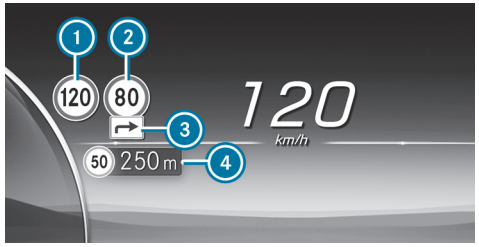

Example

1. Permissible speed
2. Permissible speed when there is a restriction
3. Additional sign with restriction
4. Speed limits up ahead

Speed limits are always shown as a priority over other traffic signs, such as no-overtaking zones, forexample. The head-up display can only show a maximum of one traffic sign with a speed limit. If two speed signs are shown

on the driver display, forexample when speed limits are detected, the value of the left-hand speed restriction (1) is always transmitted to the limiter, cruise control or to Active Distance Assist DISTRONIC for acceptance and is shown on the head-up display.

Important information from other systems can cause traffic signs to be hidden for a short time.

DEPENDING ON THE RESPECTIVE COUNTRY OF USE, TRAFFIC SIGN ASSIST CAN DETECT AND DISPLAY THE FOLLOWING TRAFFIC SIGNS, FOR EXAMPLE:

- speed limits
- end of the speed limit
- overtaking restrictions
- residential streets
- signs showing the start or end of motorways and dual carriageways

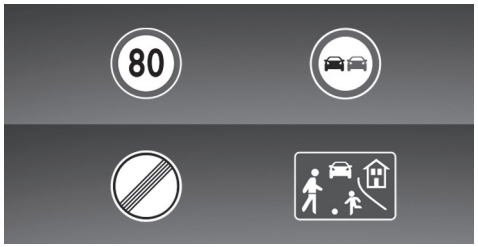

Detected traffic signs (examples)

TRAFFIC SIGN ASSIST CAN ALSO DETECT THE FOLLOWING ADDITIONAL SIGNS (3), FOR EXAMPLE, AND EVALUATE THE RELEVANCE OF THE RESTRICTIONS WHERE NECESSARY USING AUXILIARY VEHICLE SENSORS:

- wet conditions
- slippery road surfaces
- fog
- temporary restrictions
- exits
- restrictions for vehicle/trailer combinations

Traffic Sign Assist also uses data from the digital road map of the navigation system. When you leave or enter a municipality or change roads, on a motorway exit or slip road forexample, or after you turn at a junction, this means that the screen on the driver display can be updated without a traffic sign having been detected.

ⓘ Regularly update the digital road map of the navigation system to ensure optimum functioning of Traffic Sign Assist (⟶ page 49).

Depending on the respective vehicle equipment and country of use, the system may also display upcoming speed restrictions on the driver display and head-up display. The driver display may also show the distance to an upcoming lower speed limit. Information from the digital road map of the navigation system is used for this purpose. The Assistance menu can also display a dynamic visualisation of the speed limits ahead.

If Traffic Sign Assist cannot determine the current maximum permissible speed, e.g.due to a lack of signage, the indicator appears on the driver display.

Traffic Sign Assist is not available in all countries. This indicator is shown permanently in the vehicle when travelling in countries which do not support Traffic Sign Assist.

If the system is temporarily or permanently unavailable due to a technical fault or because the windscreen is dirty, a corresponding display message appears

on the driver display. The Traffic Sign Assist warning lamp [OFF] also lights up on the driver display in certain countries.

ⓘ Also observe the information on display messages from Traffic Sign Assist (⟶ page 887).

WARNING WHEN THE MAXIMUM PERMISSIBLE SPEED IS EXCEEDED

The system can warn you if you are about to exceed the maximum permissible speed. Depending on the respective country of use, you can set the extent to which the maximum permissible speed may be exceeded in the multimedia system before a warning is issued. You can switch off the warning, or in the settings you can select whether the warning should be issued visually, with the traffic sign flashing on the driver display or as a combination of a visual and audible warning. Selection of the type of warning is confirmed via an indicator on the driver display, depending on the respective country of use.

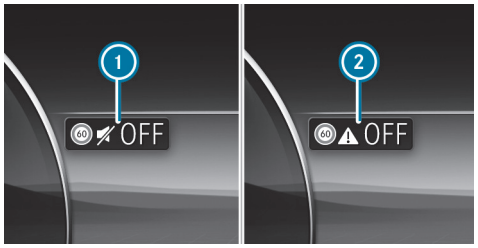

Example

1. Visual warning only
2. Warning off

ⓘ The type, duration and deployment stages of the speed warning, as well as the option to set the timing of the deployment stages from which the warning is issued, are subject to legislation valid for the respective country in which the vehicle is delivered.

ADDITIONAL WARNING FUNCTIONS

Warning for no-entry signs: Traffic Sign Assist can warn you if you drive down a section of road in the wrong direction of travel, forexample, on motorway slip roads or one-way streets.

Warning at pedestrian crossings: if you approach pedestrian crossings, provided that pedestrians are in the danger zone or are moving towards it, Traffic Sign Assist can warn you up to a speed of approximately 70 km/h.

Warning at stop signs: Traffic Sign Assist can warn you up to a speed of approximately 70 km/h if you are about to drive past a stop sign unintentionally. In this case, the sign must be unambiguous, forexample, if the system detects more than one stop sign, or if a stop sign is confirmed using the digital navigation map. No warning can be issued if several different signs are detected.

Warning at red traffic lights: Traffic Sign Assist can warn you up to a speed of approximately 70 km/h if you are about to drive through a red traffic light unintentionally.

THE FOLLOWING CONDITIONS MUST BE FULFILLED:

- Several traffic lights are being detected.
- All traffic lights detected are red.
- At least one of the red traffic lights detected is on the front passenger side beside the vehicle's lane.
- The traffic lights are in the following sequence (from top to bottom): red, yellow, green.

ⓘ Where available, you can turn the warnings on and off in the Traffic Sign Assist menu under Further warnings(⟶ page 458).

TRAILER OPERATION

ⓘ Refer to the chapter on the trailer hitch (⟶ page 503).

If a trailer or bicycle rack is connected correctly, the central display shows the prompt regarding the type of trailer and its maximum permissible speed (⟶ page 510).

The driver is solely responsible for ensuring that the maximum permissible speed is adapted manually in the Trailer type category.

IN PARTICULAR, COUNTRY-SPECIFIC LAWS MUST BE TAKEN INTO ACCOUNT, E.G.REGARDING:

- maximum design speed or maximum permissible speed
- permissible gross mass with or without towing vehicle
- required number of years with a corresponding driving licence
- type and condition of the road used
- the weather conditions

The maximum permissible speed adapted to the vehicle/trailer combination can be transferred to the manual or automatic speed control during the journey (depending on the respective equipment).

The system can take into account additional signs for the vehicle combination regarding speed limits and clear road traffic rules (country-dependent).

No maximum permissible speed can be selected for a bicycle rack in the multimedia system. When using a bicycle rack, observe the specifications for the maximum permissible speed in the manufacturer's owner's manual.

SYSTEM LIMITS

THE SYSTEM MAY BE IMPAIRED OR INOPERATIVE IN THE FOLLOWING SITUATIONS IN PARTICULAR:

- If visibility is poor, e.g.due to insufficient illumination of the road, highly variable shade conditions, rain, snow, fog, swirling dust or heavy spray.
- if there is glare, e.g.from oncoming traffic, direct sunlight or reflections
- if there is soiling on the windscreen in the vicinity of the multifunction camera, or if the camera is misted up, damaged or obscured.
- If the traffic signs are difficult to see because, forexample, they are dirty, obscured, faded, iced over, damaged, inconveniently positioned, insufficiently illuminated or askew.
- Active traffic signs with LED displays may not be detected correctly, or even at all, due to technical factors suchas transmission frequency.
- If the information on the navigation system's digital road map is incorrect, incomplete or out of date.
- If the signs, road markings or road layout are ambiguous, e.g.traffic signs at roadworks, at exits and slip roads, adjacent lanes or parallel roads, and pedestrian crossing markings at traffic lights.
- If the signage or road markings do not comply with the standard
- If the signage, road markings or road layout are country-specific and deviate from the navigation system's route guidance, e.g.at or after roadworks
- After sharp turns and in tight bends, if traffic signs are outside the camera's field of vision.
- If you overtake vehicles with traffic signs affixed or attached to them.

SETTING TRAFFIC SIGN ASSIST

Multimedia system:

Settings » Assistance » Assistance » Traffic Sign Assist

ACTIVATING OR DEACTIVATING THE SPEED LIMIT WARNING

ⓘ The speed limit warning is switched on by default (depending on the respective country).

► Switch off Speed limit warning .

Following country-specific legislation, the speed limit warning remains deactivated until the next time the vehicle is switched on or off and the driver's door is opened.

ⓘ The acoustic speed limit warning can also be switched off and on via quick-access, by pressing and holding the mute button on the steering wheel, by pressing the speed icon in the status line of the central display or via a voice control command (availability of these functions is country-dependent).

CHANGE THE TYPE OF SPEED LIMIT WARNING

► Change the warning to Visual only or Visual and audible.

SETTING THE WARNING THRESHOLD

This value determines the speed at which a warning is issued when exceeded.

► Set the desired speed under Warning Threshold.

ⓘ Availability of the function is subject to country-specific legislation.

SWITCHING THE ACOUSTIC SIGNAL FOR A NEW MAXIMUM PERMISSIBLE SPEED ON OR OFF

ⓘ The acoustic signal for a new maximum permissible speed is switched off at the factory.

The function determines whether a subtle, non-intrusive sound supports each change of the displayed speed in the driver display.

► Activate or deactivate the function.

ⓘ Availability of the function is dependent on the respective country.

ACTIVATING OR DEACTIVATING ADDITIONAL FUNCTIONS OF TRAFFIC SIGN ASSIST

► Activate or deactivate Further warnings.

The available functions are switched on or off.

SET THE TYPE OF WARNING FOR OTHER FUNCTIONS

► Select Visual only or Visual and audible.

Traffic light view

INFORMATION ABOUT THE TRAFFIC LIGHT VIEW

The traffic light view supports the driver when waiting in front of a red light by displaying the camera image on the central display. The camera image is displayed when the driver is the first vehicle in front of the red light and faded out when the vehicle drives off.

DISPLAYING TRAFFIC LIGHT VIEW

Requirements:

- The Traffic light view option is switched on.
- A traffic light view is available.

Multimedia system:

Settings Assistance Assistance Traffic light view

This function is not available in all countries.

If the vehicle is in first position at a traffic light, the camera image with traffic light view is shown on the central display.

When the vehicle pulls away, the camera image is faded out.

- Activate or deactivate Traffic light view.

USING OTHER AVAILABLE FUNCTIONS

- Select .
- Select On request or Automatic.

  If On request is set and a traffic light view is available, the Please tap here for traffic light view. message is displayed. The camera image is shown after confirmation of the message.

  When Automatic is set, the camera image is automatically displayed when the traffic light view is available.

Blind Spot Assist and Active Blind Spot Assist

FUNCTION OF BLIND SPOT ASSIST AND ACTIVE BLIND SPOT ASSIST WITH EXIT WARNING

WARNING
Risk of accident despite Blind Spot Assist

Blind Spot Assist does not react to vehicles approaching and overtaking you at a greatly different speed.

Blind Spot Assist cannot warn drivers in this situation.

- Always pay careful attention to the traffic situation and maintain a safe distance at the side of the vehicle.

WARNING
Risk of accident despite Active Blind Spot Assist

ACTIVE BLIND SPOT ASSIST DOES NOT REACT TO THE FOLLOWING:

- if you overtake a vehicle too closely so that it is in the blind spot area
- if vehicles travelling at a much faster speed approach and then overtake

Active Blind Spot Assist may not give warnings or intervene in such situations.

- Always pay careful attention to the traffic situation and maintain a safe distance at the side of the vehicle.

Blind Spot Assist and Active Blind Spot Assist use radar sensors to monitor the area up to 40 m behind and 3 m alongside your vehicle.

The systems can detect vehicles travelling from speeds of approximately 12 km/h and issue a warning if they move into the monitoring range. They are only an aid and are not a substitute for driver attention.

STATUS INDICATORS ON THE DRIVER DISPLAY

Grey: The system is activated but inoperative.

Green: The system is activated and operational.

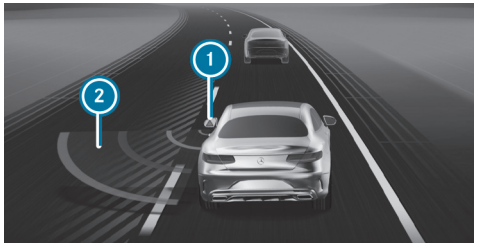

Notifications on the driver display in the Assistance menu

1 Warning lamp in the exterior mirror
2 Red radar waves

If a vehicle is detected at speeds above approximately 12 km/h and this vehicle enters the warning range immediately afterwards, the warning lamp in the corresponding outside mirror lights up red. In the Assistance menu, the lamp in exterior mirror 1 also lights up in red and the lane in which the vehicle is detected is hatched out.

If a vehicle is detected in the monitoring range and you activate the turn signal indicators in the corresponding direction, a double warning tone sounds once and the warning lamp flashes red in the corresponding outside mirror. Red radar waves 2 are displayed next to your vehicle in the assistance graphic.

If the turn indicator remains on, the display in the exterior mirror flashes for all other detected vehicles, but no further warning tone sounds. If you overtake a vehicle quickly, no warning is given.

Vehicles with active ambient lighting: If Warning assistance is switched on, the warning is reinforced by the ambient lighting (→ page 292).

Observe the notes on driving systems and your responsibility; you may otherwise fail to recognise potential dangers (→ page 412).

EXIT WARNING

WARNING
Risk of accident despite exit warning

The exit warning neither reacts to stationary objects nor to persons or road users approaching you at a greatly differing speed.

The exit warning cannot warn drivers in these situations.

- Always pay particular attention to the traffic situation when opening the doors and make sure there is sufficient clearance.

The exit warning is an additional function of Blind Spot Assist and Active Blind Spot Assist and can warn vehicle occupants attempting to leave a stationary vehicle about approaching vehicles.

If a vehicle is detected in the monitored range, the red warning lamp lights up in the corresponding exterior mirror.

If a vehicle occupant pulls the door handle on the side of the warning, a warning tone sounds twice and the ambient lighting in the respective door and the warning lamps in the corresponding outside mirror flash red.

Vehicles with MBUX Interior Assistant: the visual warning begins as soon as the hand of a vehicle occupant moves into the area of the door.

ⓘ **Vehicles with ambient lighting or active ambient lighting:** the Warning assistance of the ambient lighting can be activated and deactivated (⟶ page 292).

ⓘ The warning assistance can differ depending on the equipment and may vary according to the setting.

The exit warning is only available when Blind Spot Assist or Active Blind Spot Assist is active.

After the vehicle is switched off, the exit warning continues to function for a few minutes. If a door is opened when the vehicle is switched off, the exit warning is active again for a few minutes. When the outside mirror warning lamp flashes three times, the exit warning is no longer available.

The exit warning is only an aid and not a substitute for the attention of vehicle occupants. The responsibility for opening the doors and exiting the vehicle remains with the vehicle occupants at all times.

SYSTEM LIMITS

BLIND SPOT ASSIST AND ACTIVE BLIND SPOT ASSIST MAY BE LIMITED IN THE FOLLOWING SITUATIONS, IN PARTICULAR:

- If there is dirt on the sensors or the sensors are obscured
- In poor visibility, e.g. owing to fog, heavy rain or snow
- If there are narrow vehicles, e.g. bicycles or motorcycles
- If the road has very wide or narrow lanes
- If vehicles are not driving in the centre of their lane

Warnings may be issued in error when driving close to crash barriers or similar structural borders. Always make sure that there is sufficient distance to the side for other traffic or obstacles.

Warnings may be interrupted when driving alongside long vehicles, e.g. trucks, for a prolonged period.

Blind Spot Assist and Active Blind Spot Assist are not operational when reverse gear is engaged.

Blind Spot Assist and Active Blind Spot Assist are not operational if transport equipment, e.g. a trailer or bicycle rack, is attached to the trailer hitch and the electrical connection has been correctly established.

ADDITIONALLY, THE EXIT WARNING MAY BE LIMITED IN THE FOLLOWING SITUATIONS:

- when the sensors are shaded by adjacent vehicles in narrow parking spaces
- when people approach the vehicle
- in the event of stationary or slowly moving objects

You can watch an animation on this topic via the following link:

BRAKE APPLICATION FUNCTION IN ACTIVE BLIND SPOT ASSIST

ⓘ The brake application function is only available for vehicles with Driving Assistance Package.

If Active Blind Spot Assist detects a risk of a side impact in the monitored range, a course-correcting brake application is carried out. Course-correcting brake application helps in this case to avoid collision with another vehicle.

The course-correcting brake application is available to you from a speed of approx. 30 km/h - 60 km/h (depending on the country) up to a speed of approx. 200 km/h.

WARNING
Risk of accident despite brake application of Active Blind Spot Assist

A course-correcting brake application cannot always prevent a collision.

- ► Always steer, brake or accelerate yourself, especially if Active Blind Spot Assist warns you or makes a course-correcting brake application.
- ► Always maintain a safe distance at the sides.

WARNING
Risk of accident despite Active Blind Spot Assist

ACTIVE BLIND SPOT ASSIST DOES NOT REACT IN THE FOLLOWING SITUATIONS:

- If you overtake vehicles at a high speed.
- If vehicles approach and overtake you at a greatly different speed.

Active Blind Spot Assist may not give warnings or intervene in such situations.

- ► Always pay careful attention to the traffic situation and maintain a safe distance at the side of the vehicle.



If a course-correcting brake application occurs, the red warning lamp flashes in the outside mirror and a warning tone sounds. In addition, a display (1) indicating the danger of a side collision appears on the driver display.

In rare cases, the system may make an inappropriate brake application. This brake application may be interrupted at any time if you steer slightly in the opposite direction or accelerate.

SYSTEM LIMITS
Note the system limitations of Active Blind Spot Assist; you may otherwise not recognise the dangers (⟶ page 459).

EITHER A COURSE-CORRECTING BRAKE APPLICATION WHICH IS NOT APPROPRIATE TO THE DRIVING SITUATION, OR NONE AT ALL, MAY OCCUR IN THE FOLLOWING SITUATIONS IN PARTICULAR:

- Vehicles or obstacles, e.g. crash barriers, are located on both sides of your vehicle.
- An approaching vehicle leaves too little lateral distance between you.
- You have adopted a sporty driving style with high cornering speeds.
- You brake or accelerate significantly.
- A driving safety system intervenes, e.g. ESP® or Active Brake Assist.
- ESP® is deactivated.
- A loss of tyre pressure or a defective tyre is detected.
- Transport equipment, e.g. a trailer or bicycle rack, is attached to the trailer hitch and the electrical connection has been correctly established.

SWITCHING BLIND SPOT ASSIST OR ACTIVE BLIND SPOT ASSIST ON OR OFF

Multimedia system:

Settings Assistance Collision avoidance

- Activate or deactivate Active Blind Spot Assist.

Active Lane Keeping Assist

FUNCTION OF ACTIVE LANE KEEPING ASSIST

Active Lane Keeping Assist monitors the area in front of your vehicle using the multifunction camera (→ page 412).

It can protect you against unintentionally departing your lane. The system can guide you back into your lane with a course-correcting steering intervention, and warn you with tangible steering wheel feedback.

Active Lane Keeping Assist is available in the speed range between 60 km/h and 200 km/h.

THE SYSTEM CAN INTERVENE IF THE FOLLOWING CONDITIONS ARE MET:

- Active Lane Keeping Assist detects a lane marking.
- You touch this lane marking with one of your front wheels.

If you activate the turn signal indicators, there is no steering intervention on that side.

There is no steering intervention if you leave your lane without activating the turn signal indicators, but there is a risk of collision with a moving obstacle in your own lane.

Vehicles with Blind Spot Assist or Driving Assistance Package: If the system detects an obstacle, e.g. another vehicle, in the adjacent lane, there is steering intervention despite the direction indicators.

DEPENDING ON THE COUNTRY, ACTIVE LANE KEEPING ASSIST CAN ALREADY REACT IN THE FOLLOWING SITUATIONS FROM A SPEED OF APPROXIMATELY 45 KM/H:

- If your own vehicle is overtaken by another road user and a risk of collision is detected, there is course-correcting steering intervention.
- If a recognised lane marking is crossed, a warning is given by tangible feedback from the steering wheel.

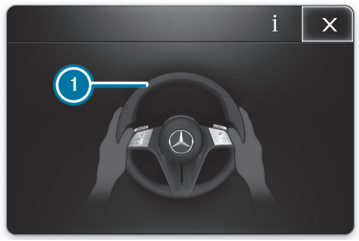

IN THE FOLLOWING CASES THE WARNING (1) APPEARS ON THE DRIVER DISPLAY AND A WARNING TONE SOUNDS:

- A steering intervention by Active Lane Keeping Assist lasts more than approximately ten seconds.
- There are two or more steering interventions by the systems within approximately three minutes, without steering intervention by the driver.

You can set the sensitivity of the system in the Active Lane Keeping Assist settings in order to determine the level of assistance. You can also determine whether the system is to react to broken lane markings, or only to continuous lane markings (→ page 465).

If ATTENTION ASSIST has detected signs of drowsiness or microsleep, the most sensitive setting is automatically selected (⟶ page 422).

STATUS DISPLAYS OF ACTIVE LANE KEEPING ASSIST

White: Active Lane Keeping Assist is switched off.

If ESP® is switched off or a tyre pressure loss warning is indicated, Active Lane Keeping Assist is automatically switched off.

Yellow: There is a malfunction. Also note any display messages.

Grey: Active Lane Keeping Assist is switched on but not ready.

Green: Active Lane Keeping Assist is switched on and ready. If the system is only ready on one side, only the lane marking on that side is shown in green.

Red: Active Lane Keeping Assist has guided you back into your lane by a course-correcting steering intervention. If a tangible warning is also given in the steering wheel, the status display flashes. The lane marking of the relevant side is shown in red.

Vehicles without Driving Assistance Package: If both lane markings are shown in red on the status display at the same time, Active Lane Keeping Assist has initiated an emergency stop (⟶ page 441).



Notification on the driver display in the Assistance menu

If one of your front wheels moves onto a detected lane marking, this is highlighted in red in the Assistance menu of the driver display.

ⓘ **Vehicles with active ambient lighting:** If Warning assistance is switched on, the warning by Active Lane Keeping Assist is reinforced by the ambient lighting (⟶ page 292).
Depending on the respective equipment, different operational acknowledgement effects and warning assistance effects are available.

SYSTEM LIMITS

IN THE FOLLOWING SITUATIONS, THERE MAY BE NO COURSE-CORRECTING STEERING INTERVENTION, BUT A WARNING MAY BE GIVEN IN THE STEERING WHEEL DEPENDING ON THE SITUATION:

- if you clearly and actively steer, brake or accelerate.
- if a driving safety system is intervening, e.g. ESP® or Active Brake Assist.
- if you have adopted a sporty driving style with high cornering speeds or high rates of acceleration.
- if transport equipment, e.g. a trailer or bicycle rack, is attached to the trailer hitch and the electrical connection has been correctly established

THE SYSTEM MAY BE IMPAIRED OR INOPERATIVE IN THE FOLLOWING SITUATIONS IN PARTICULAR:

- if there is poor visibility, e.g. due to insufficient illumination of the road, highly variable shade conditions, rain, snow, fog or heavy spray
- if there is glare, e.g. from oncoming traffic, direct sunlight or reflections.
- if there is soiling on the windscreen in the vicinity of the multifunction camera, or if the camera is misted up, damaged or obscured.

- if the bumper is soiled in the area of the radar sensors, or if these are damaged or obscured
- if there are no lane markings or several unclear lane markings for one lane, e.g. around roadworks
- if the lane markings are worn, dark or covered
- if the distance to the vehicle in front is insufficient and therefore the lane markings cannot be detected
- if the lane markings change quickly, e.g. lanes branch off, cross one another or merge
- if the lanes are very narrow and winding

Observe the notes on driving systems and your responsibility; otherwise you may fail to recognise potential dangers (⟶ page 412).

ACTIVATING/DEACTIVATING ACTIVE LANE KEEPING ASSIST

Multimedia system:

Settings » Assistance » Collision avoidance » Active Lane Keeping Assist

- Activate or deactivate the function.

Alternatively, Active Lane Keeping Assist can be activated and deactivated via quick-access.

ⓘ The setting after starting the vehicle depends on the country.

SETTING ACTIVE LANE KEEPING ASSIST

Multimedia system:

Settings » Assistance » Collision avoidance » Active Lane Keeping Assist

SETTING THE SENSITIVITY

- Select ⚙.
- Select Early, Med. or Late.

The last setting selected will be applied the next time the vehicle is started.

ⓘ The standard setting of this function is country-dependent.

ACTIVATING/DEACTIVATING ASSISTANCE WHEN LANE MARKINGS ARE INTERRUPTED

- Select Advanced support.

The last setting selected will be applied the next time the vehicle is started.

ⓘ The standard setting of this function is country-dependent.

ⓘ This function must be activated for vehicles without Driving Assistance Package for Emergency Stop Assist to be available in full measure.
Further information on Emergency Stop Assist (⟶ page 441).

DYNAMIC BODY CONTROL function

DYNAMIC BODY CONTROL continuously adjusts the characteristics of the suspension dampers to the current operating and driving conditions.

THE DAMPING IS SET INDIVIDUALLY FOR EACH WHEEL AND IS AFFECTED BY THE FOLLOWING FACTORS:

- the road surface conditions
- the vehicle load
- the drive program selected
- the driving style

The drive program can be adjusted using DYNAMIC SELECT.

AIRMATIC

FUNCTION OF AIRMATIC
AIRMATIC is an air suspension system with variable damping for improved driving comfort. The all-round level control system ensures the best possible suspension and a consistent level of ground clearance, even with a loaded vehicle. When driving at speed, the vehicle is lowered automatically to improve driving safety and reduce energy consumption. You also have the option of manually adjusting the vehicle level.

AIRMATIC INCLUDES THE FOLLOWING COMPONENTS AND FUNCTIONS:

- Air suspension with automatic all-round level control
- ADS PLUS (adaptive damping system with constant adjustment of damping characteristics)
- Speed-dependent lowering of the vehicle level
- Raised vehicle level selectable via the multimedia system for increased ground clearance

SUSPENSION TUNING AND VEHICLE LEVEL PER DRIVE PROGRAM

DRIVE PROGRAM C:

- Comfortable suspension tuning
- Adjusts the vehicle to normal level
- From a speed of approx. 120 km/h the vehicle is lowered to low level -1
- Below a speed of approx. 80 km/h the vehicle is raised to normal level

DRIVE PROGRAM E:

- Comfortable suspension tuning
- The vehicle is set to low level -1

DRIVE PROGRAM S:

- Firmer suspension tuning
- The vehicle is set to low level -1

DRIVE PROGRAMS B, H AND EL (PLUG-IN HYBRID):

- Comfortable suspension tuning
- Adjusts the vehicle to normal level
- From a speed of approx. 120 km/h the vehicle is lowered to low level -1
- Below a speed of approx. 80 km/h the vehicle is raised to normal level

Operation with a trailer or bicycle rack: if transport equipment such as a trailer or a bicycle rack is attached to the trailer hitch and the electrical connection has been correctly established, the vehicle remains at normal level irrespective of speed or the drive program selected.

SETTING THE VEHICLE LEVEL (AIRMATIC)

WARNING
Risk of accident because vehicle level is too high

Driving characteristics may be impaired.

The vehicle can drift outwards, for example, when steering or cornering.

- ► Choose a vehicle level which is suited to the driving style and the road surface conditions.

WARNING
Risk of becoming trapped due to the vehicle lowering

When lowering the vehicle, persons may become trapped if body parts are between the vehicle body and the tyres or underneath the vehicle.

- ► Make sure nobody is underneath the vehicle or in the immediate vicinity of the wheel arches when you lower the vehicle.

WARNING
Risk of becoming trapped due to the vehicle lowering

Vehicles with AIRMATIC or level control: when you unload luggage or leave the vehicle, the vehicle first rises slightly and then returns to the set level shortly afterwards.

You or anyone else in the vicinity of the wheel arches or the underbody could thus become trapped.

The vehicle can also be lowered after being locked.

- ► When leaving the vehicle, make sure that nobody is in the vicinity of the wheel arches or the underbody.

NOTE
Damage due to vehicle lowering

Parts of the body could be damaged when the vehicle is lowered.

- ► Make sure that there are no obstacles such as kerbs underneath or in the immediate vicinity of the body when the vehicle is being lowered.

Requirements:

- The vehicle has been started.
- The vehicle is not moving faster than 60 km/h.
- If trailer socket is connected (trailer/rear bicycle rack): the vehicle is not moving faster than 30 km/h.

Multimedia system:



RAISING THE VEHICLE

► Select .

The indicator lamp lights up continuously.

The vehicle is set to high level +1.

Your selection is saved. The selected high level +1 remains active after the vehicle is switched off.

ⓘ The high level +1 can also be selected or deselected using the voice control.

THE VEHICLE IS LOWERED AGAIN IN THE FOLLOWING SITUATIONS:

- When driving faster than 80 km/h.
- If trailer socket is connected (trailer/rear bicycle rack): the vehicle is moving faster than 30 km/h.

LOWERING THE VEHICLE

► Select .

The indicator lamp goes out.

The vehicle is lowered to normal level.

ⓘ In the Sport and Eco drive programmes, only normal vehicle level is possible when the trailer socket is connected (trailer/rear bicycle rack).

AMG RIDE CONTROL

FUNCTION OF AMG RIDE CONTROL

AMG RIDE CONTROL is an electronically controlled damping system for improved driving comfort and increased driving safety.

THE DAMPING IS ADJUSTED INDIVIDUALLY TO EACH WHEEL AND DEPENDS ON THE FOLLOWING FACTORS:

- driving style, e.g. sporty
- road condition, e.g. undulations
- individual selection of **SPORT**, **SPORT +** or **COMFORT**

The suspension tuning depends on the selected drive program.

In each drive program, you can also select the tuning individually using the AMG steering wheel button (⟶ page 468). After every change of drive program, automatic suspension tuning is active again.

ⓘ When the vehicle is started again, the **COMFORT** setting is activated automatically.

SELECTING SUSPENSION TUNING WITH THE AMG STEERING WHEEL BUTTON

ⓘ You can also adjust the suspension setting via the multimedia system (⟶ page 354).

YOU CAN SELECT FROM THREE DIFFERENT SUSPENSION SETTINGS:

- **COMFORT** ensures a comfortable suspension setting. Select this suspension setting if you prefer a comfortable driving style.

- **SPORT** ensures a firmer suspension setting. Select this suspension setting when employing a sporty driving style, e.g. on winding country roads.
- **SPORT +** ensures a very firm suspension setting.

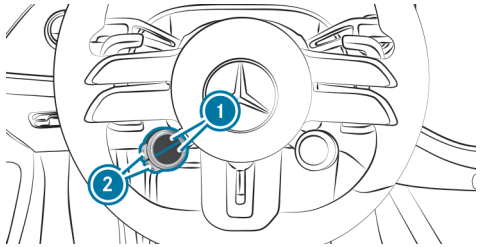

► Press the upper or lower (1) display button repeatedly, until it displays the [ ] symbol.

ⓘ If the display button does not show the symbol, then it is hidden. How functions are displayed and the order in which they are displayed can be set in the multimedia system (⟶ page 347).

► Press the corresponding button (2).

The selected suspension setting is shown on the driver display as a message.

THE [ ] SYMBOL INDICATES THE CURRENTLY SELECTED MODE:

- [ ] (blue): COMFORT
- [ ] (yellow): SPORT
- [ ] (red): SPORT +

RACE START

INFORMATION ON RACE START

ⓘ RACE START is only available for Mercedes-AMG vehicles.

ⓘ RACE START is only available for vehicles with the **AMG DYNAMIC PLUS package**.

RACE START enables optimum vehicle acceleration from a standstill. This requires a road surface with suitable grip, and the tyres and vehicle must also be in good condition.

ⓘ You can only use RACE START after the vehicle has been run in for approximately 1500 km.

ⓘ RACE START must not be used in normal road traffic. RACE START may only be activated and used on dedicated race circuits, not on public roads.
Read the safety notes and information on ESP® (⟶ page 416).

WARNING
Risk of skidding and having an accident from wheels spinning

If you use RACE START, depending on the ESP® mode selected, there is an increased risk of skidding and having an accident.

► Make sure that no persons or obstacles are in the close vicinity of your vehicle.

ACTIVATING RACE START

WARNING
Risk of skidding and having an accident from wheels spinning

If you use RACE START, depending on the ESP® mode selected, there is an increased risk of skidding and having an accident.

► Make sure that no persons or obstacles are in the close vicinity of your vehicle.

Requirements:

- The vehicle is switched on and the transmission and the engine are at normal operating temperature. The temperature indicators on the driver display are now represented in white rather than blue.
- The state of charge of the high-voltage battery is sufficient. The remaining electric range is at least 1 km.
- The driver's door is closed.
- All vehicle occupants have their seat belts fastened properly and are seated correctly.
- The front wheels are in the straight-ahead position.
- The vehicle is on level ground.
- The vehicle is stationary, the brake pedal is depressed (left foot) and the parking brake is released.
- The transmission is in position D.
- One of the drive programs S or S+ is selected (→ page 351).

ⓘ RACE START must not be used in normal road traffic. RACE START may only be activated and used on dedicated race circuits, not on public roads.
Read the safety notes and information on ESP® (→ page 416).

► Forcefully depress the accelerator pedal fully.
The engine speed will increase. Pretension is applied to the seat belts on the driver's seat and front passenger seat.
In vehicles with active ambient lighting, a special animation of the ambient light commences.

ⓘ If the activation conditions are not fulfilled, RACE START will not function. The RACE START cancelled message appears on the driver display.

► The RACE START Release brake to start message appears on the driver display.

ⓘ If the brake pedal is not released after a short while, RACE START will be cancelled. The RACE START cancelled message appears on the driver display.

- Take your foot off the brake, but keep the accelerator pedal depressed.
  The vehicle will pull away at maximum acceleration. The RACE START active message appears on the driver display.

RACE START will be deactivated immediately if you release the accelerator pedal during RACE START or if any of the activation conditions is no longer fulfilled. The RACE START cancelled message appears on the driver display.

After being activated several times in short succession, RACE START will be unavailable until a certain distance has been driven.

Reversing camera

FUNCTION OF THE REVERSING CAMERA

The reversing camera is merely an aid. It is not a substitute for you paying attention to your surroundings. Responsibility for safe manoeuvring and parking remains with you at all times. Ensure that there are no people, animals or objects, etc. in the manoeuvring area while manoeuvring and parking.

The area behind the vehicle is displayed as a mirror image, as it would appear in the inside mirror.

CAMERA PERSPECTIVE ON THE CENTRAL DISPLAY

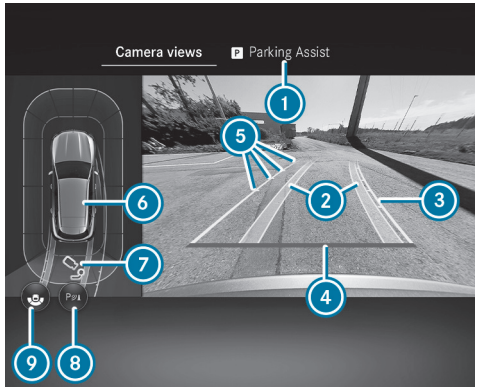

Example

1. Parking Assistance menu
2. Path indicating the route the wheels will take with the current steering movement (dynamic)
3. Driven surface depending on the current steering movement (dynamic)
4. Guide line at a distance of approximately 0.3 m from the rear area
5. Guide lines at a distance of approximately 0.5 m, 1.0 m, 1.5 m and 3.0 m from the rear area
6. Warning display of Parking Assist PARKTRONIC (⟶ page 478)
7. Trailer view (depending on the respective vehicle equipment)
8. Activates/deactivates Parking Assist PARKTRONIC (⟶ page 481)
9. Switches between wide-angle view and reversing camera with top view

When Active Parking Assist is active, the paths 2 are displayed in green (⟶ page 482).

WIDE-ANGLE VIEW



Example

1. Warning display of Parking Assist PARKTRONIC (⟶ page 478)
2. Activates/deactivates Parking Assist PARKTRONIC (⟶ page 481)
3. Switches between standard view and wide-angle view

TRAILER VIEW

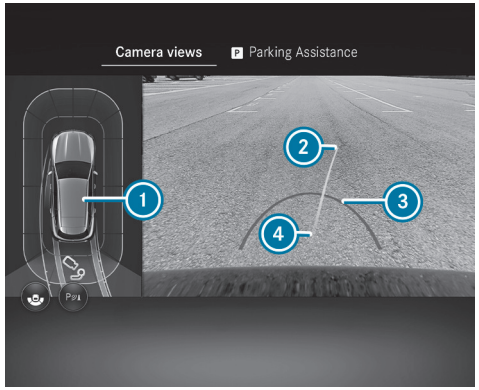

Example

1. Warning display of Parking Assist PARKTRONIC (⟶ page 478)
2. Yellow guide line, locating aid
3. Red guide line at a distance of approximately 0.3 m from the ball head of the trailer hitch
4. Ball head of the trailer hitch

SYSTEM LIMITS

If the system is not ready for operation, the message System inoperative appears on the driver display and/or on the central display.

If a camera perspective is selected and the central display is temporarily black or does not show a camera image, the camera system is also faulty or is not ready for operation.

The field of vision and other functions of the camera system may be restricted due to additional vehicle attachments (e.g. licence plate bracket or bicycle rack).

WARNING
Risk of accident due to functional limitations of the reversing camera

Functional limitations of the reversing camera could lead to a risk of collision with persons or objects.

- ► Do not use the reversing camera if its functions are limited.
- ► Ensure that there are no persons, animals or objects etc., in the manoeuvring area while manoeuvring and parking.

THE REVERSING CAMERA WILL NOT FUNCTION, OR WILL ONLY FUNCTION TO A LIMITED EXTENT IN THE FOLLOWING SITUATIONS:

- You are driving forwards at a speed greater than approximately 16 km/h.
- The boot lid is open.
- The weather conditions are poor, e.g.:
  - heavy rain, snow, fog, storm or spray.
- The light conditions are poor, e.g.:
  - at night, or if a light is shining into the camera.
- the camera lens is obstructed, dirty or misted up. Observe the notes on cleaning the reversing camera (⟶ page 731).
- The camera or rear of your vehicle is damaged. In this case, have the camera, its position and setting checked at a qualified specialist workshop.

The field of vision and other functions of the camera system may be restricted due to additional vehicle attachments (e.g. licence plate bracket or bicycle rack).

ⓘ The contrast of the display can be impaired by incidental light or other light sources, e.g. when driving out of a garage. Pay particular attention in this case.

ⓘ Have the display repaired or replaced if, forexample, its use is considerably restricted due to pixel errors.

Also observe the information on vehicle sensors and cameras (⟶ page 412).

360° Camera

FUNCTION OF THE 360° CAMERA

THE 360° CAMERA IS A SYSTEM CONSISTING OF FOUR CAMERAS:

- Front camera
- Reversing camera
- Two outside mirror cameras

The cameras record the immediate surroundings of the vehicle and provide assistance, e.g. during parking or at exits which are difficult to see.

The cameras are merely aids and may show a distorted view of obstacles, show them incorrectly or even omit them altogether. They are not a substitute for you paying attention to your surroundings. Responsibility for safe manoeuvring and parking remains with you at all times. Ensure that there are no people, animals or objects, etc. in the manoeuvring area while manoeuvring and parking.

CAMERA PERSPECTIVES ON THE CENTRAL DISPLAY

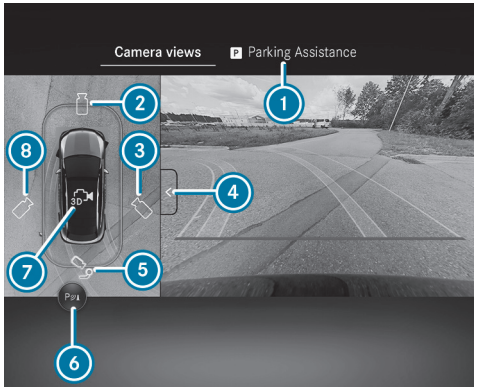

Example

1. Parking Assistance menu
2. Image from the front camera
3. 3D view, right-hand side of the vehicle
4. Switches between standard view and wide-angle view
5. Switches between reversing camera and trailer view (depending on the respective vehicle equipment)
6. Activates/deactivates Parking Assist PARKTRONIC (⟶ page 481)
7. 3D auto view
8. 3D view, left-hand side of the vehicle

ⓘ The warning display of Parking Assist PARKTRONIC is shown in all views (⟶ page 478).

ⓘ Availability of the 3D view 3, 8 and 3D auto view 7 functions is dependent upon the respective equipment.

FUNCTION OF THE GUIDE LINES

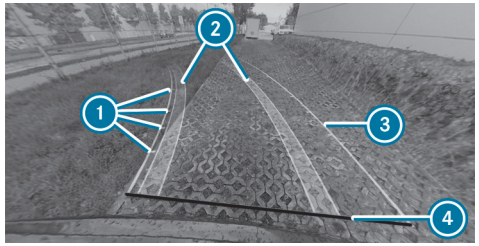

Example

1. Guide lines at a distance of approximately 0.5 m, 1.0 m, 1.5 m and 3.0 m from the rear area
2. Path indicating the route the wheels will take with the current steering movement (dynamic)
3. Driven surface depending on the current steering movement (dynamic)
4. Guide line at a distance of approximately 0.3 m from the rear area

ⓘ When Active Parking Assist is active, paths and guide lines are displayed in green instead of yellow (⟶ page 482).

TOP VIEW WITH THE IMAGE FROM THE FRONT OR REVERSING CAMERA

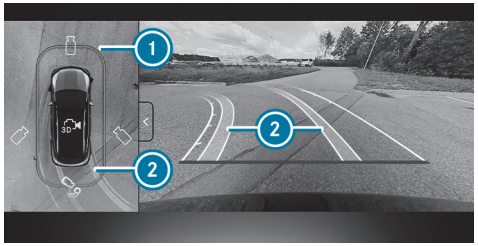

Example

1. Warning display of Parking Assist PARKTRONIC (⟶ page 478)
2. Path indicating the current steering movement

3D VIEW, LEFT/RIGHT-HAND SIDE OF THE VEHICLE

WARNING
Risk of accidents due to objects not being displayed or being displayed as heavily distorted

Due to the projection of the cameras, objects in the 3D views may be heavily distorted or not displayed at all.

- ► Ensure that there are no persons, animals or objects in the manoeuvring area while manoeuvring and parking.



Example

1. Warning display of Parking Assist PARKTRONIC (⟶ page 478)
2. Switches between 3D view and 2D view

The virtual camera moves to the respective side of the vehicle. When you change the transmission position, the view is automatically adapted.

The display of the area beneath the vehicle may differ from the actual circumstances.

3D AUTO VIEW

The area behind the vehicle is **not** displayed as a conventional mirror image in the 3D views.

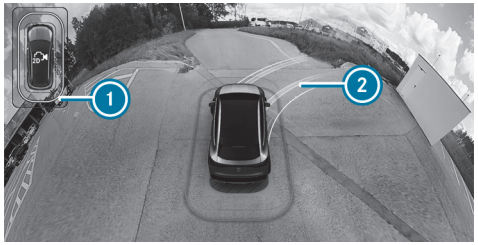

Example

1 Display of Parking Assist PARKTRONIC (⟶ page 478)
2 Guide lines

The virtual camera moves to the standard view, facing forward from the rear above the roof. The view changes automatically when approaching obstacles.

If you touch the touchscreen, the view changes to a 3D view with free rotation. You can turn, tilt and zoom the views by touch.

WIDE-ANGLE VIEW

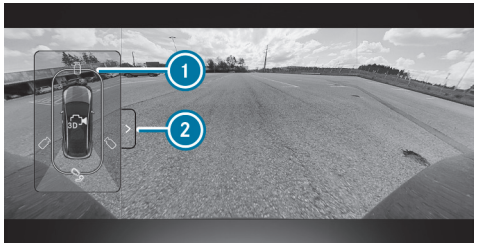

Example

1 Display of Parking Assist PARKTRONIC (⟶ page 478)
2 Switches between standard view and wide-angle view

TRAILER VIEW

If you select the trailer view and no trailer is coupled to the vehicle, the following display appears:

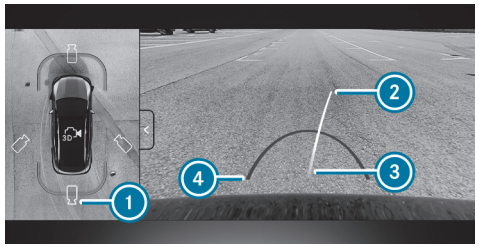

Example

1 Switches between standard view and trailer view
2 Yellow guide line, locating aid
3 Ball head of the trailer hitch
4 Red guide line at a distance of approximately 0.3 m from the ball head of the trailer hitch

ⓘ In trailer mode, the guide lines are shown at the level of the trailer hitch.

When the electrical connection is established between the vehicle and the trailer, the display changes to the side camera view:



Example

(5) Switches to the reversing camera or trailer view

SYSTEM LIMITS

If the system is not ready for operation, the message System inoperative appears on the driver display and/or on the central display.

If a camera perspective is selected and the central display is temporarily black or does not show a camera image, the camera system is also faulty or is not ready for operation.

WARNING
Risk of accident due to functional limitations of the 360° camera

If the function of the 360° camera is restricted, there is a risk of collision with persons or objects.

- ► Do not use the 360° camera in case of functional limitations.
- ► Ensure that there are no persons, animals or objects etc., in the manoeuvring area while manoeuvring and parking.

THE 360° CAMERA WILL NOT FUNCTION, OR WILL ONLY FUNCTION TO A LIMITED EXTENT IN THE FOLLOWING SITUATIONS, FOR EXAMPLE:

- You are driving forwards at a speed greater than approximately 16 km/h.
- The doors are open.
- An outside mirror is not fully extended.
- The boot lid is open.
- The weather conditions are poor, e.g.:
  - heavy rain, snow, fog, storm or spray.
- The light conditions are poor, e.g.:
  - at night, or if a light is shining into the camera.
- the camera lens is obstructed, dirty or misted up. Refer to the notes on cleaning the 360° camera (⟶ page 731).
- if cameras or vehicle components in which the cameras are fitted are damaged. In this event, have the cameras, their positions and their setting checked at a qualified specialist workshop.

For technical reasons, the standard height of the vehicle may be altered if the vehicle is carrying a heavy load and this can result in inaccuracies in the guide lines and in the display of generated images.

The field of vision and other functions of the camera system may be restricted due to additional vehicle attachments (e.g. licence plate bracket or bicycle rack).

ⓘ The display contrast may be impaired by abrupt direct sunlight or other light sources, e.g. when driving out of a garage. Pay particular attention in this case.

ⓘ Have the display repaired or replaced if, forexample, its use is considerably restricted due to pixel errors.

Also observe the information on vehicle sensors and cameras (⟶ page 412).

CALLING UP THE 360° CAMERA VIEWS USING THE BUTTON

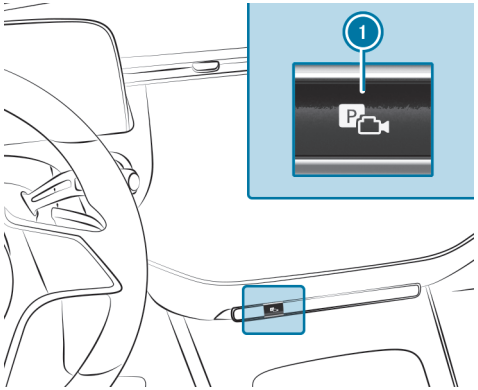

- Press button (1).
- Select the menu Camera views .
- Select the desired view in the multimedia system (⟶ page 473).

SELECTING A VIEW FOR THE 360° CAMERA (REVERSE GEAR)

- Engage reverse gear.
- Select the desired view in the multimedia system (⟶ page 473).

OPENING THE CAMERA COVER

Multimedia system:

Settings » Assistance » Camera

- Select Open camera cover.

ⓘ The camera cover closes automatically after some time or after the vehicle is switched on or off.

Parking Assist PARKTRONIC

FUNCTION OF PARKING ASSIST PARKTRONIC

Parking Assist PARKTRONIC is an electronic parking assistance system which monitors the area surrounding your vehicle . The distance between your vehicle and a detected obstacle is displayed visually and acoustically.

The passive side impact protection also warns you of obstacles to the side. These must be detected beforehand by the sensors in the front or rear bumper while driving by them. If you steer in the direction of a detected obstacle and there is a risk of a lateral collision, a warning is issued.

Passive side impact protection can be activated and deactivated via the multimedia system (⟶ page 482).

In order that front or rear obstacles to the side can be displayed, the vehicle must first travel a distance of at least half a vehicle length. Once the vehicle has travelled a distance of one vehicle length, obstacles on all sides can be shown.

Parking Assist PARKTRONIC serves solely as an aid. It is not a substitute for you having to pay attention to your surroundings. The responsibility for safe manoeuvring, parking and unparking remains with you at all times. Ensure that there are no persons, animals or objects etc. in the manoeuvring area while manoeuvring and parking in/exiting parking spaces.

DISPLAYS ON THE CENTRAL DISPLAY

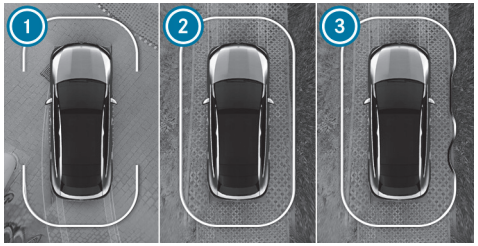

Example: vehicles with 360° camera

1 Ready for display at the front and rear
2 Ready for display all around
3 Ready for display all around and obstacles detected

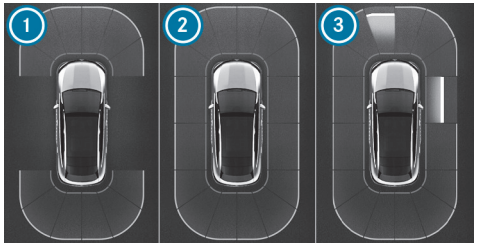

Example: vehicles with reversing camera

1 Ready for display at the front and rear
2 Ready for display all around
3 Ready for display all around and obstacles detected

As soon as Parking Assist PARKTRONIC is ready for display, the respective areas 1 to 3 of the display are shown in blue.

THE COLOUR OF THE DISPLAY CHANGES DEPENDING ON THE DISTANCE TO THE DETECTED OBSTACLE:

- **Blue:** > 1 m (no obstacles detected)
- **Yellow:** approx. 1 m - 0.7 m
- **Orange:** approx. 0.7 m - 0.4 m
- **Red:** < 0.4 m

Vehicles with 360° camera: the boundary line shifts dynamically depending on the position and distance of the obstacles detected.

An intermittent warning tone also sounds depending on the distance to the obstacle detected. You can set the timing of the warnings in the multimedia system. In the Warn early setting, the system warns you from a distance of 1 m. In the standard setting, from a shorter distance of 0.4 m.



Example: vehicles with 360° camera



Example: vehicles with reversing camera

IF YOU ARE NOT IN THE CAMERA & PARKING **MENU AND AN OBSTACLE IN THE VEHICLE'S PATH IS DETECTED, A POP-UP WINDOW** 1 **APPEARS ON THE CENTRAL DISPLAY IF THE FOLLOWING REQUIREMENTS ARE MET:**

- **Vehicles without Active Parking Assist:** when driving no faster than 12 km/h.
- **Vehicles with Active Parking Assist:** when driving no faster than 18 km/h.

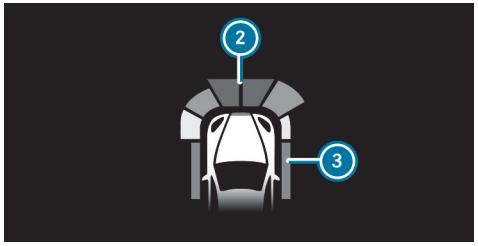

Notifications in the head-up display (example)

Optionally, obstacles detected by Parking Assist PARKTRONIC from a distance of approximately 1.0 m in front 2 and 0.7 m at the sides 3 can also be displayed on the head-up display.

VEHICLES WITH ACTIVE AMBIENT LIGHTING AND PARKING PACKAGE WITH REMOTE PARKING FUNCTIONS

When Warning assistance is activated, the Parking Assist PARKTRONIC display is also accompanied by ambient lighting. If an obstacle is detected, the ambient lighting lights up in the same colour as the central display.

The active ambient lighting which accompanies the Parking Assist PARKTRONIC display is only intended to accentuate the display on the central display, and not to replace it.

More information on ambient lighting: (⟶ page 292)

ⓘ The ambient lighting does not respond in the vicinity of the driver display or behind the rear doors.

ⓘ Depending on the selected setting, other functions may supersede the ambient lighting effects of Parking Assist PARKTRONIC. In this case, the ambient lighting effects of Parking Assist PARKTRONIC do not occur.

SYSTEM LIMITS

PARKING ASSIST PARKTRONIC DOES NOT NECESSARILY TAKE INTO ACCOUNT THE FOLLOWING OBSTACLES:

- Obstacles below the detection range, e.g.persons, animals or objects
- Obstacles above the detection range, e.g.protruding loads, overhangs or loading ramps of lorries
- Pedestrians or animals approaching the vehicle from the side

- Objects placed next to the vehicle

OBSTACLES ON THE SIDES ARE NOT SHOWN IN THE FOLLOWING SITUATIONS, FOR EXAMPLE:

- You park the vehicle and switch it off.
- You open the doors.

After the vehicle is restarted, obstacles must be detected again by driving past them before a new warning can be issued.

OBSERVE ALSO THE SYSTEM LIMITS OF THE FOLLOWING SYSTEMS:

- Reversing camera (⟶ page 471)
- 360° camera (⟶ page 473)

Observe the information on vehicle sensors and cameras; otherwise the system cannot function properly (⟶ page 412).

Vehicles with trailer hitch: If a transport device, e.g.trailer or bicycle rack is attached to the trailer hitch and the electrical connection is correctly established, Parking Assist PARKTRONIC is deactivated for the rear zone.

PROBLEMS WITH PARKING ASSIST PARKTRONIC

If the Parking Assist PARKTRONIC display lights up red for approximately three seconds and then goes out, and the symbol [P OFF] appears on the driver display, the system may have been deactivated due to signal interference. Start the vehicle again and check whether Parking Assist PARKTRONIC works in a different location.

IF A WARNING TONE ALSO SOUNDS, THE CAUSES MAY BE AS FOLLOWS:

- **The sensors are dirty:** clean the sensors (⟶ page 731).
- **Parking Assist PARKTRONIC has been deactivated due to a malfunction:** restart the vehicle. If the problem persists, consult a qualified specialist workshop.

ACTIVATING/DEACTIVATING PARKING ASSIST PARKTRONIC

NOTE
Vehicle damage when parking or manoeuvring due to nearby objects

Parking Assist PARKTRONIC may not detect certain objects in the close-up range.

► When parking or manoeuvring, pay particular attention to objects that are under or above the sensors, e.g. flower pots or drawbars. The vehicle or other objects may otherwise be damaged.

Requirements:

- The camera menu is open.
- Or: the Parking Assist PARKTRONIC pop-up window is displayed.

► Tap [P] on the central display.

If the indicator lamp is lit, Parking Assist PARKTRONIC is active. If the indicator lamp does not light up or the symbol [P OFF] is displayed, Parking Assist PARKTRONIC is not active.

Parking Assist PARKTRONIC is automatically activated when the vehicle is started.

Alternatively, Parking Assist PARKTRONIC can be activated or deactivated in the quick-access menu.

SETTING THE PARKING ASSIST PARKTRONIC WARNING TONES

Multimedia system:

Settings » Assistance » Parking » PARKTRONIC

SETTING WARNING TONES

- ► Select Set warning tones.
- ► Set the desired level under Volume or Tone pitch.

ⓘ Availability of the function is dependent on the respective country of use.

ACTIVATING/DEACTIVATING AUDIO FADEOUT

- ► Select Audio fadeout and activate or deactivate Audio fade for warnings.

  The volume of the media source currently playing is reduced when a Parking Assist PARKTRONIC warning tone sounds.

or

- ► Select Audio fadeout and activate or deactivate Audio fadeout in trans. position R.

  The volume of the media source currently playing is reduced when reverse gear is engaged.

SETTING THE WARNING TIME

- ► Select Time of warning.
- ► Set the desired warning time for Front or Rear.
- ► Activate or deactivate Side warning.

Active Parking Assist

FUNCTION OF ACTIVE PARKING ASSIST

⚠ **WARNING**

Risk of accident due to objects located above or below the detection range of Active Parking Assist

IF THERE ARE OBJECTS ABOVE OR BELOW THE DETECTION RANGE, THE FOLLOWING SITUATIONS MAY ARISE:

- Active Parking Assist may steer too early.
- The vehicle may not stop in front of these objects.

There is a danger of collision!

- ► In these situations, do not use Active Parking Assist.

Active Parking Assist is an electronic parking assistance system which uses ultrasound with the assistance of the reversing camera or 360° camera. When you are driving forwards up to approximately 35 km/h, the system automatically measures parking spaces on both sides of the vehicle.

Active Parking Assist serves solely as an aid. It is not a substitute for you having to pay attention to your surroundings. The responsibility for safe manoeuvring, parking and unparking remains with you at all times. Ensure that no persons, animals or objects etc. are in the vehicle's path.

Active Parking Assist offers the following functions:

VEHICLES WITH REVERSING CAMERA

- Parking in parking spaces along the roadway
- Reversing into parking spaces perpendicular to the roadway

The parking space can be selected as desired. The parking procedure is executed with the vehicle reversing.

VEHICLES WITH 360° CAMERA

- Parking in parking spaces along the roadway
- Parking in parking spaces perpendicular to the roadway (either forwards or reversing as desired)
- Parking in parking spaces that can only be detected as such from markings (forexample at the roadside)
- Exiting parking spaces if you have parked using Active Parking Assist

The parking space can be selected as desired. The parking direction (forwards or reversing) can also be freely selected, depending on the orientation of the parking space.

If Active Parking Assist is available, the notification [P] appears on the driver display. When the system detects parking spaces, the notification [P] appears. The arrows show the side of the road on which free parking spaces are detected. These are then shown on the central display.

When Active Parking Assist is activated, the turn signal indicator is activated based on the calculated path of your vehicle. The parking and unparking procedures are assisted by acceleration, braking, steering and gear changes.

To start the parking procedure, press the [P] (⟶ page 484) button or go to the navigation view (e.g.when near the destination) and select Active Parking Assist (⟶ page 559).

ACTIVE PARKING ASSIST WILL BE CANCELLED IN THE FOLLOWING SITUATIONS:

- You press the button [P] again.
- You begin steering.
- You select the park position [P].
- You engage the electric parking brake.
- ESP® intervenes.
- You open the driver's door.

SYSTEM LIMITS

If the exterior lighting is malfunctioning, Active Parking Assist is not available.

OBSERVE ALSO THE SYSTEM LIMITS OF THE FOLLOWING SYSTEMS:

- Reversing camera (⟶ page 471)
- 360° camera (⟶ page 473)

Objects above or below the detection range of Active Parking Assist, e.g.protruding loads, overhangs or loading ramps of trucks or parking space boundaries are not detected when measuring the parking space. These are also not subsequently taken into account when calculating the parking procedure. In some circumstances, Active Parking Assist may therefore prematurely guide you into the parking space or brake too late.

Certain environmental conditions, suchas snowfall or heavy rain, may lead to inaccurate measurement of a parking space. Parking spaces that are partially occupied by trailer drawbars might not be identified as such or may be measured incorrectly. Only use Active Parking Assist on level road surfaces with adequate grip.

Active Parking Assist can also display unsuitable parking spaces, e.g.parking spaces in which parking is not permitted or on unsuitable surfaces.

DO NOT USE ACTIVE PARKING ASSIST IN THE FOLLOWING SITUATIONS, FOR EXAMPLE:

- in extreme weather conditions, suchas ice, packed snow or in heavy rain.
- when transporting a load that protrudes beyond the vehicle

- if the parking space is on a steep downhill or uphill gradient
- when snow chains are fitted
- when a trailer or bicycle rack is attached
- directly after a tyre change or when spare tyres are fitted
- if the tyre pressure is too low or too high
- on steep downhill gradients of more than approximately 15%
- if the vehicle level has been offset, e.g.mounting the kerb on one side (vehicles with level control)

You can watch an animation on this topic via the following link:

PARKING WITH ACTIVE PARKING ASSIST

WARNING
Risk of accident due to objects located above or below the detection range of Active Parking Assist

IF THERE ARE OBJECTS ABOVE OR BELOW THE DETECTION RANGE, THE FOLLOWING SITUATIONS MAY ARISE:

- Active Parking Assist may steer too early.
- The vehicle may not stop in front of these objects.

There is a danger of collision!

► In these situations, do not use Active Parking Assist.

WARNING
Risk of accident due to vehicle swinging out while parking or pulling out of a parking space

While parking or exiting a parking space, the vehicle swings out and can drive onto areas of the oncoming lane.

This could cause you to collide with objects or other road users.

► Pay attention to objects and other road users.

► Where necessary, stop the vehicle or cancel the parking procedure with Active Parking Assist.

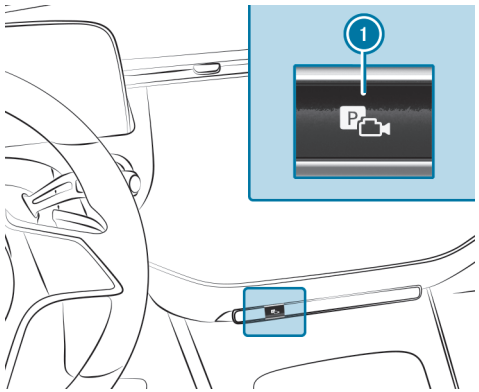

► Press the button 1.

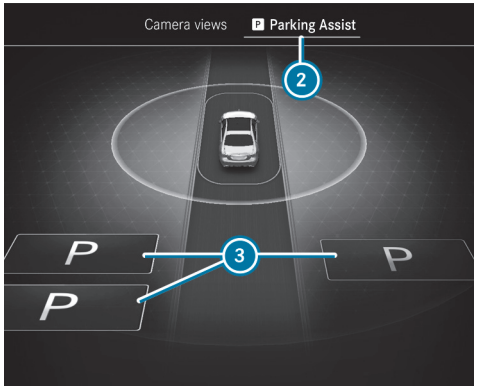

Parking Assist menu (example for left-hand side of the screen)

- Select the menu Parking Assistance (2).
  Parking spaces (3) detected by the system are shown on the central display.

At speeds greater than approximately 16 km/h, the camera perspective on the right-hand side of the screen switches off.

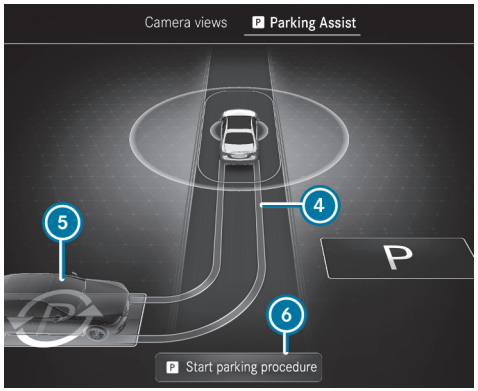

Parking Assist menu (example)

When the vehicle is at a standstill, the indicated vehicle path (4) into the currently selected parking space (5) also appears.

- When a parking space is displayed, stop the vehicle.
- If necessary, select another parking space.
- **Vehicles with 360° camera:** to change the parking direction, tap the selected parking space again.
- **To start the parking procedure:** press the button (1) again.

or

- Depress the brake pedal and select Start parking procedure (6) (depending on the respective vehicle equipment).
- Take your hands off the steering wheel and release the brake pedal.
  The vehicle drives into the selected parking space.
  The duration of the parking procedure is indicated by a progress bar.

The turn signal indicator is switched on automatically when the parking procedure begins. You are responsible for selecting the turn signal indicator in accordance with the traffic conditions. If necessary, select the turn signal indicator accordingly.

Following completion of the parking procedure, the Active Parking Assist finished message appears.

- Secure the vehicle against rolling backwards or forwards. When necessitated by legal requirements or local conditions, turn the wheels towards the kerb.

ⓘ You can stop the vehicle and change the transmission position during the parking procedure. The system then calculates a new vehicle path. If no new vehicle path is available, the transmission position can be changed again, or the process can be cancelled.

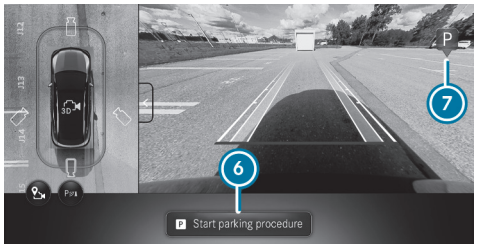

Immediate parking from the menu Camera views

- ► Select the Camera views menu.
- ► When the vehicle is stationary and in transmission position R, and the symbol (7) appears in the camera image: press the button (1) again.

or

- ► Depress the brake pedal and select Start parking procedure (6) (depending on the respective vehicle equipment).
  The parking procedure is initiated for the detected parking space.

ⓘ The parking space and parking direction cannot be changed in immediate parking.

DEPARTING WITH ACTIVE PARKING ASSIST

⚠ **WARNING**
Risk of accident due to objects located above or below the detection range of Active Parking Assist

IF THERE ARE OBJECTS ABOVE OR BELOW THE DETECTION RANGE, THE FOLLOWING SITUATIONS MAY ARISE:

- Active Parking Assist may steer too early.
- The vehicle may not stop in front of these objects.

There is a danger of collision!

- ► In these situations, do not use Active Parking Assist.

⚠ **WARNING**
Risk of accident due to vehicle swinging out while parking or pulling out of a parking space

While parking or exiting a parking space, the vehicle swings out and can drive onto areas of the oncoming lane.

This could cause you to collide with objects or other road users.

- ► Pay attention to objects and other road users.
- ► Where necessary, stop the vehicle or cancel the parking procedure with Active Parking Assist.

Requirements:

- The vehicle is equipped with a 360° camera.

- The vehicle has been parked with Active Parking Assist.

► Start the vehicle.

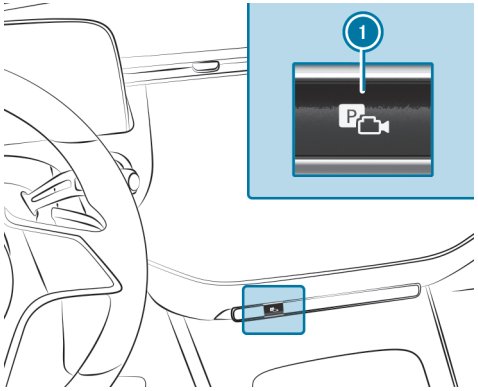

► Press the button 1.

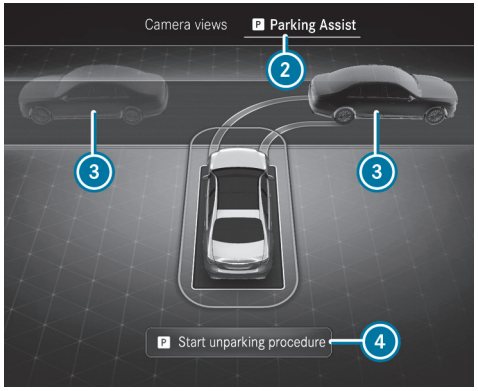

Parking Assist menu (example for left-hand side of the screen)

► Select the Parking Assistance 2 menu.

► If necessary, change the direction of exit 3.

► **To initiate the unparking procedure:** press the button 1 again.

or

► Depress the brake pedal and select Start unparking procedure 4 (depending on the respective vehicle equipment).

► If necessary, change the transmission position. Observe any messages displayed on the driver display and central display.

The vehicle moves out of the parking space.

The duration of the unparking procedure is indicated by a progress bar.

The turn signal indicator is automatically switched on when the unparking procedure is initiated, and automatically switched off again when it is completed. You are responsible for selecting the turn signal indicator in accordance with the traffic conditions. If necessary, select the turn signal indicator accordingly.

After the parking space has been exited, a warning tone and the Active Parking Assist finished, take control of vehicle message prompt you to take control of the vehicle. You have to accelerate, brake, steer and change gear yourself again.

If you do not react to the prompt to reassume control of the vehicle, the system will brake the vehicle to a standstill.

PAUSING ACTIVE PARKING ASSIST

WARNING
Risk of accident due to objects located above or below the detection range of Active Parking Assist

IF THERE ARE OBJECTS ABOVE OR BELOW THE DETECTION RANGE, THE FOLLOWING SITUATIONS MAY ARISE:

- Active Parking Assist may steer too early.
- The vehicle may not stop in front of these objects.

There is a danger of collision!

► In these situations, do not use Active Parking Assist.

YOU CAN INTERRUPT THE PARKING OR UNPARKING PROCEDURE OF ACTIVE PARKING ASSIST BY PERFORMING ONE OF THE FOLLOWING ACTIONS, FOREXAMPLE:

► Depress the brake pedal.

► Open the front passenger door, a rear door, the boot or the bonnet.

► Apply the electric parking brake or activate the HOLD function.

REINITIATING THE PARKING OR UNPARKING PROCEDURE:

► Check the vehicle surroundings.

► Ensure once again that there are no persons, animals or objects in the vehicle's path.

► Gently depress the accelerator pedal.
Observe the messages shown on the driver display and central display.

► Observe the system limits of Active Parking Assist (⟶ page 482).

AUTOMATIC BRAKING FUNCTION OF ACTIVE PARKING ASSIST

WARNING
Risk of accident due to objects located above or below the detection range of Active Parking Assist

IF THERE ARE OBJECTS ABOVE OR BELOW THE DETECTION RANGE, THE FOLLOWING SITUATIONS MAY ARISE:

- Active Parking Assist may steer too early.
- The vehicle may not stop in front of these objects.

There is a danger of collision!

► In these situations, do not use Active Parking Assist.

Persons or objects detected in the vehicle's path may trigger a sudden braking action, which will in turn halt the parking or unparking procedure. The vehicle will then remain at a standstill. The parking or unparking procedure is resumed if you depress the accelerator pedal.

Check the area around your vehicle again before resuming the parking or unparking procedure. Ensure once again that no persons, animals or objects are in the vehicle's path. Observe also the system limits of Active Parking Assist.

Remote Parking Assist

FUNCTION OF REMOTE PARKING ASSIST

Remote Parking Assist is an additional function of Active Parking Assist. Comply with local traffic laws and regulations when using Remote Parking Assist on public roads.

If you are required to steer the wheels in the direction of the kerb, you must not use Remote Parking Assist.
Please note that you can only use Remote Parking Assist if you have a valid driving licence and are in a fit state to drive.

Remote Parking Assist parks or releases your vehicle while you are outside your vehicle. You can control the manoeuvring and parking process on your mobile phone.

With Remote Parking Assist, you can perform all parking and unparking procedures of Active Parking Assist. In addition, you can position the vehicle directly in front of a garage or driveway and then initiate the parking or unparking procedure with Remote Parking Assist.

Remote Parking Assist assumes control of starting, braking and steering. While Remote Parking Assist is active, the vehicle is locked.

Remote Parking Assist serves solely as an aid. It is not a substitute for you having to pay attention to your surroundings. The responsibility for safe manoeuvring, parking and unparking remains with you at all times. Pause or terminate the parking procedure as necessary. Ensure that no persons, animals or objects etc. are in the vehicle's path. Ensure that you also pay attention to other vehicles.

SYSTEM LIMITS

IF THE SYSTEM DETECTS A FAULT OR SYSTEM LIMIT DURING THE MANOEUVRING OR PARKING PROCESS, THE PROCESS IS CANCELLED:

- The vehicle is slowed to a standstill.
- The park position P is engaged and the electric parking brake is applied.
- The vehicle is switched off.
- The vehicle is still locked.

A corresponding message is displayed on the mobile phone if the parking process is cancelled.

Depending on the respective situation, you can take control of the procedure, manoeuvre the vehicle back to the starting position or manually take control of the vehicle.

The system limits of Active Parking Assist apply (→ page 482).

Certain environmental conditions, such as snowfall or heavy rain, may lead to a parking space being mismeasured or to connection problems with the mobile phone. Only use Remote Parking Assist on level ground with adequate grip.

During parking, your distance from the vehicle should not exceed approx. 3.0 m At greater distances, the procedure will be cancelled and a corresponding message will be displayed on the mobile phone. When you approach the vehicle again, you can continue the process.

You can watch an animation on this topic via the following link:

OPERATING REMOTE PARKING ASSIST

⚠ **WARNING**
Risk of accident due to objects located above or below the detection range of Remote Parking Assist

IF THERE ARE OBJECTS ABOVE OR BELOW THE DETECTION RANGE, THE FOLLOWING SITUATIONS MAY ARISE:

- Remote Parking Assist may steer too early.
- The vehicle cannot stop in front of these objects.

There is a risk of collision.

► In these situations, do not use Remote Parking Assist.

Objects located above the detection range of Remote Parking Assist will not be detected when the parking space is measured. They are therefore not taken into account when the parking procedure is calculated, e.g.protruding loads, overhangs or loading ramps of lorries. In some circumstances, Remote Parking Assist may therefore guide you into the parking space prematurely.

WARNING
Danger due to insufficient view of the vehicle surroundings

If you manoeuvre, park or exit a parking space with the vehicle using Remote Parking Assist, observe the following:

- Make sure that you have the best view possible of the vehicle and the vehicle's surroundings.
- Make sure that no persons, animals or objects are in the path of your vehicle.
- Make sure that you maintain a suitable distance to the vehicle and that neither you nor other road users could be endangered.
- Be aware of the vehicle's surroundings at all times and identify possible dangers.
- If necessary, cancel the parking procedure.

No persons or pets are permitted to remain in the vehicle during the parking procedure. Observe the system limits at all times. If necessary, cancel the parking procedure. Always ensure that vehicle access is guaranteed for other road users.

WARNING
Risk of accident due to vehicle swinging out while parking or pulling out of a parking space

While parking or pulling out of a parking space, the vehicle swings out and can drive onto areas of the oncoming lane.

This could cause you to collide with objects or other road users.

- Pay attention to objects and other road users.
- Where necessary, stop the vehicle or cancel the parking procedure with Remote Parking Assist.

Requirements:

FOR THE REMOTE PARKING ASSIST FUNCTION, YOU WILL REQUIRE:

- a Mercedes me user account
- the current Remote Parking Assist app for your vehicle model
- a mobile phone

A list of compatible mobile phones can be obtained at: https://www.mercedes-benz-mobile.com/

THE FOLLOWING OPERATING SYSTEMS ARE SUPPORTED:

- Android™
- Apple® iOS

- Activate the "Remote Parking Assist" service, e.g.via the https://www.mercedes-benz.de
- Authorise the mobile phone with the Remote Parking Assist app in the vehicle (⟶ page 492).

SELECTING THE PARKING MANOEUVRE IN ADVANCE WHILE INSIDE THE VEHICLE

- Stop the vehicle and engage the park position P.

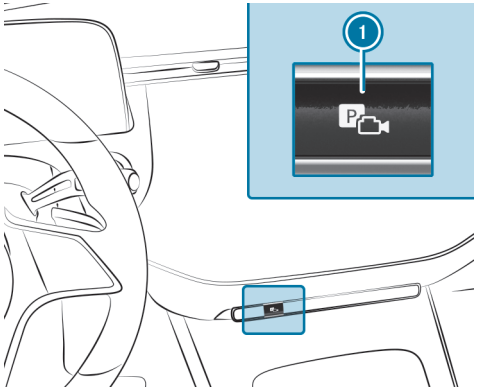

- Press the button 1 .

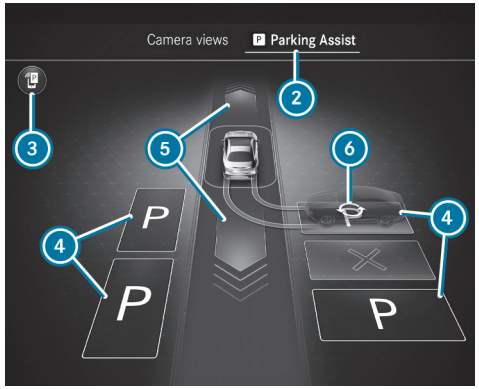

- Select the Parking Assistance 2 menu.
- For further information on Remote Parking Assist: select 3.
- If necessary, select another parking space 4 or select 5 to drive straight ahead into a garage, forexample.
- If necessary, change the parking direction 6.

ⓘ Alternatively, you can begin parking with Active Parking Assist (⟶ page 484) and continue with Remote Parking Assist from any vehicle position. To do this, stop parking and engage the park position P.

- Switch off and exit the vehicle, taking the key with you.

STARTING THE PARKING PROCEDURE WITHOUT SELECTING IN ADVANCE

- Stop the vehicle and engage the park position P.
- Switch off and exit the vehicle, taking the key with you.

STARTING THE PARKING PROCEDURE WHILE OUTSIDE THE VEHICLE

- Unlock the vehicle.

CARRYING OUT A PARKING PROCEDURE WITH REMOTE PARKING ASSIST

ⓘ Keep the vehicle key with you during the parking procedure. Pressing a button on the vehicle key will cancel the parking procedure and slow the vehicle to a standstill.

ⓘ Following completion of the parking procedure, the vehicle is locked.

If you have started the parking procedure as described above, the vehicle is ready to connect to your mobile phone for a limited period of time.

- Start the Remote Parking Assist app on the mobile phone and connect to the vehicle.
- Follow the instructions on the Remote Parking Assist app.

ⓘ The turn signal indicator is automatically switched on when starting the parking procedure, and switched off again upon completion.

ⓘ If the connection between the vehicle and the mobile phone is interrupted while a parking manoeuvre is being performed, the manoeuvre can be continued if the connection is re-established within a short period of time.

- Once the parking procedure has been concluded, ensure that all doors and windows, the sliding sunroof and the boot of the vehicle are closed. Secure the vehicle against rolling backwards or forwards.

CANCELLING THE PARKING PROCEDURE

You can cancel the parking procedure of Remote Parking Assist at any time and slow the vehicle to a standstill.

- Cancel the parking procedure in the Remote Parking Assist app.

or

- Press a button on the vehicle key.

or

- Pull a door handle.

AUTHORISING/DEAUTHORISING A MOBILE PHONE FOR REMOTE PARKING ASSIST

Multimedia system:

Settings » Assistance » Parking

AUTHORISING A NEW MOBILE PHONE

To be able to use the Remote Parking Assist function, you must authorise your mobile phone. You can authorise up to ten mobile phones.

- Select Remote Parking Assist.
- Select Authorise a new device.

  Remote Parking Assist is ready to connect.
- Start the Remote Parking Assist app and then start the authorisation process.

  A connection prompt is displayed.

- Scan the QR code on the central display.
  The mobile phone is authorised.

DEAUTHORISING MOBILE PHONES

- Select Remote Parking Assist.
- Select Deauthorise devices.
- **To de-authorise a mobile phone:** select a mobile phone.
  The mobile phone is deleted from the device list.
- **To de-authorise all mobile phones:** select Deauthorise all devices.
  All mobile phones are deleted from the device list.

Manoeuvring assistant

FUNCTION OF DRIVE-AWAY ASSIST

WARNING
Risk of accident caused by limited detection performance of Drive Away Assist

Drive Away Assist cannot always clearly identify objects and traffic situations.

- Always pay careful attention to the traffic situation; do not rely on Drive Away Assist alone.
- Be prepared to brake or swerve as necessary, provided the traffic situation permits and that it is safe to take evasive action.

Drive-Away Assist can reduce the severity of an impact when pulling away. If the system detects an obstacle in the direction of travel, the vehicle's speed is briefly restricted to approximately 2 km/h.

THERE MAY BE A RISK OF COLLISION IN THE FOLLOWING SITUATIONS, FOR EXAMPLE:

- If the driver depresses the accelerator pedal or the brake pedal inadvertently.
- If the driver engages an incorrect gear.
- If the driver depresses the accelerator pedal with excessive force.

DRIVE-AWAY ASSIST IS ACTIVE UNDER THE FOLLOWING CONDITIONS:

- If the vehicle was stationary and the transmission position was changed to R or D.
- If the vehicle has rolled less than approximately 1.0 m since coming to a standstill.
- If the detected obstacle is less than approx. 1.0 m away.

Drive-away Assist can be activated or deactivated in the Manoeuvring assistance menu (⟶ page 496).

If a critical situation is detected, the symbol appears in red in the selected view in the Camera & parking menu.

If Drive-Away Assist is not available, the symbol appears in grey. If the Camera & parking menu is not open on the central display, the symbol appears together with the Parking Assist PARKTRONIC pop-up.

Drive-Away Assist serves solely as an aid. It is not a substitute for you having to pay attention to your surroundings. The responsibility for safe manoeuvring, parking and unparking remains with you at all times. Ensure that no persons, animals or objects etc. are in the vehicle's path.

SYSTEM LIMITS

The system limits of Active Parking Assist apply (⟶ page 482).

On uphill gradients, the performance of Drive-Away Assist is limited.

If a transport device, e.g.trailer or bicycle rack is attached to the trailer hitch, and the electrical connection is correctly established, Drive-Away Assist is not available when reversing.

FUNCTION OF CROSS TRAFFIC WARNING

⚠ **WARNING**
Risk of accident caused by limited detection performance of the cross traffic warning

The cross traffic warning cannot always clearly identify objects and traffic situations.

- ► Always pay careful attention to the traffic situation; do not rely on the cross traffic warning alone.
- ► Be prepared to brake or swerve as necessary, provided the traffic situation permits and that it is safe to take evasive action.

The cross traffic warning can warn you of crossing traffic when exiting a parking space. The radar sensors in the bumper also monitor the area adjacent to the vehicle.

THE CROSS TRAFFIC WARNING IS ACTIVE UNDER THE FOLLOWING CONDITIONS:

- Warning for crossing traffic behind: the vehicle is driving in reverse at a speed slower than approx. 10 km/h.
- Warning for crossing traffic ahead: the vehicle is driving forwards at a speed slower than approx. 10 km/h and the camera image is shown on the central display (⟶ page 478).

The Warning for crossing traffic ahead can be deactivated or activated in the Manoeuvring assistance menu.

Depending on the respective country, the Warning for crossing traffic behind can also be deactivated or activated (⟶ page 496).

If a critical situation is detected, the symbol  appears in red in the selected view in the Camera & parking menu.

WARNING FOR CROSSING TRAFFIC BEHIND

- The vehicle can be braked automatically when crossing traffic is detected.
- If the Camera & parking menu is not opened and a critical situation is detected, a warning appears on the central display together with the Parking Assist PARKTRONIC pop-up.

WARNING FOR CROSSING TRAFFIC AHEAD

- If Active Parking Assist is active, the vehicle can be braked automatically when crossing traffic is detected.
- A warning appears if Active Parking Assist is not active, but the Camera & parking menu is open.

- If the Camera & parking menu is not open, the system cannot react to crossing traffic.

The cross traffic warning serves solely as an aid, and is not a substitute for you paying attention to your surroundings. The responsibility for safe manoeuvring, parking and exiting parking spaces remains with you. Ensure that no persons, animals or objects etc. are in the vehicle's path.

SYSTEM LIMITS

If the cross traffic warning is not available, the symbol appears in grey.

The system limits of Active Parking Assist apply (⟶ page 482).

If the radar sensors are obstructed by vehicles or other objects, detection is not possible.

THE CROSS TRAFFIC WARNING IS NOT AVAILABLE IN THE FOLLOWING SITUATIONS:

- on uphill gradients
- Warning for crossing traffic behind: if a transport device, e.g. trailer or bicycle rack is attached to the trailer hitch, and the electrical connection is correctly established.

FUNCTION OF CLOSE-RANGE BRAKING

WARNING
Risk of accident caused by limited detection by the manoeuvring brake function

The manoeuvring brake function cannot always clearly detect people. Other obstacles are not detected by the function.

In these cases, the function may brake unnecessarily or not brake at all.

- ► Always pay careful attention to the traffic situation; do not rely on the manoeuvring brake function alone.
- ► Be ready to brake.

Close-range braking can prevent collisions with pedestrians when the vehicle is reversing at slow speeds. If the reversing camera detects a person in the vehicle's path, the vehicle can be braked to a standstill.

CLOSE-RANGE BRAKING CAN INTERVENE UNDER THE FOLLOWING CONDITIONS:

- The vehicle is reversing at a speed slower than 10 km/h.
- The camera image is shown on the central display (⟶ page 478).

Depending on the respective country, close-range braking can be deactivated or activated in the Manoeuvring assistance menu (⟶ page 496).

When close-range braking is triggered, the symbol appears in red in the selected view in the menu Camera & parking.

If close-range braking is not available, the symbol appears in grey.

Close-range braking serves solely as an aid. It is not a substitute for you having to pay attention to your surroundings. The responsibility for safe manoeuvring, parking and unparking remains with you at all times. Ensure that no persons, animals or objects etc. are in the vehicle's path.

SYSTEM LIMITS

OBSERVE THE SYSTEM LIMITS OF THE FOLLOWING FUNCTIONS:

- Active Parking Assist (⟶ page 482)
- 360° camera (⟶ page 473)
- Reversing camera (⟶ page 471)

THE CLOSE-RANGE BRAKING FUNCTION IS NOT AVAILABLE IN THE FOLLOWING SITUATIONS:

- on uphill gradients
- if transport equipment, e.g. a trailer or bicycle rack, is attached to the trailer hitch and the electrical connection has been correctly established.

SWITCH PARKING SUPPORT ON OR OFF

Multimedia system:

Settings Assistance Parking

This function is a Digital Extra (⟶ page 114).

- Select Manoeuvring assistance.
- Switch the desired parking support on or off.

Memory Parking Assist

FUNCTION OF MEMORY PARKING ASSIST

WARNING

Risk of accident due to objects located above or below the detection range of Memory Parking Assist

IF THERE ARE OBJECTS ABOVE OR BELOW THE DETECTION RANGE, THE FOLLOWING SITUATIONS MAY ARISE:

- Memory Parking Assist may steer too early.
- The vehicle may not stop in front of these objects.

This result in a collision.

- In these situations, do not use Memory Parking Assist.

Memory Parking Assist can park your vehicle using a previously stored parking space. You can store parking procedures with a total distance of up to 500 m (100 m per parking or unparking procedure.

During parking or unparking, the system can travel a previously stored distance of up to approximately 100 m to or out of the desired parking space, forexample, from the driveway entrance into the garage.

Only one parking or unparking procedure can be recorded within a radius of approximately 150 m.

Only use Memory Parking Assist on private property. Use on public roads, e.g. in public parking spaces, is not permitted.

Memory Parking Assist serves solely as an aid. It is not a substitute for you having to pay attention to your surroundings. The responsibility for safe

manoeuvring, parking and unparking remains with you at all times. Ensure that no persons, animals or objects etc. are in the vehicle's path.

SYSTEM LIMITS

Observe the system limits of Active Parking Assist (⟶ page 482).

Objects located above or below the detection range of Memory Parking Assist may not be detected during the parking procedure.

Drawbars of parked trailers that protrude into the parking space, for example, may not be detected.

DO NOT USE MEMORY PARKING ASSIST IN THE FOLLOWING SITUATIONS, FOR EXAMPLE:

- in extreme weather conditions, suchas ice, packed snow or in heavy rain.
- when transporting a load that protrudes beyond the vehicle
- if the parking space is on a steep downhill or uphill gradient
- when snow chains are fitted

You can watch an animation on this topic via the following link:

RECORDING A PARKING PROCEDURE USING MEMORY PARKING ASSIST

Requirements:

- The entire route is within your own property, forexample, and not on public roads.
- The system requires reference points in the surroundings to orient itself, forexample fences, walls or trees. A certain distance must therefore be driven after starting the vehicle. If insufficient reference points are detected in the surrounding area, no new route can be recorded.
- Sufficient distance is maintained between the vehicle and surrounding objects as the parking procedure is being recorded.

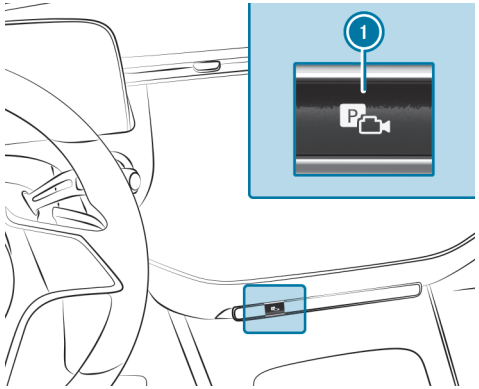

► Press the button 1.

The Camera & parking view opens on the central display.



► Select the Memory Parking Assist 2 menu.

► Brake the vehicle to a standstill at the desired starting point of the assisted parking procedure, e.g.a driveway entrance.

► **To start recording:** tap on 3.

If not all conditions for a recording are met, the symbol (3) is greyed out.

- To start recording, press the button (1).
- Park the vehicle in the desired parking space. Do not exceed a speed of 8 km/h during this process.
- **To stop recording:** stop the vehicle and tap on (3) again.
  The recording is stored.

It is also possible to record the unparking procedure using the same method with Memory Parking Assist. To do so, refer to the information on the central display.

You can delete and rename stored parking procedures in the Memory Parking Assist settings.

PARKING WITH MEMORY PARKING ASSIST

Requirements:

- A parking procedure has been recorded.

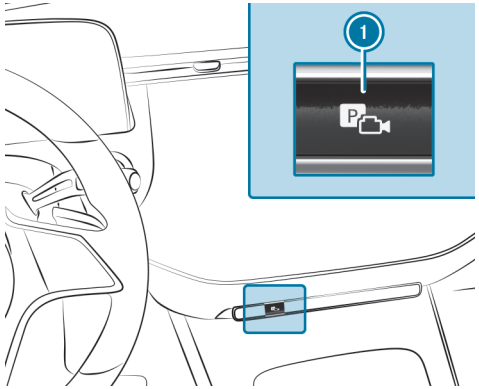

- Press the button (1).
  The Camera & parking view opens on the central display.



- Select the Memory Parking Assist (2) menu.
- Brake the vehicle to a standstill at the starting point of the stored parking procedure.
- **To start the parking procedure:** press [▶].

► Follow the instructions on the central display.
The vehicle drives into the selected parking space.

ⓘ The turn signal indicator is not switched on automatically. You are responsible for selecting the turn signal indicator in accordance with the traffic conditions.

► Following completion of the parking procedure, secure the vehicle against rolling away.

DEPARTING WITH MEMORY PARKING ASSIST

Requirements:

- The unparking procedure was recorded together with the corresponding parking procedure and stored separately, without switching off the vehicle in between.
- The vehicle was parked using Memory Parking Assist.
  Alternatively, manually position the vehicle at the starting point of the recorded unparking procedure.

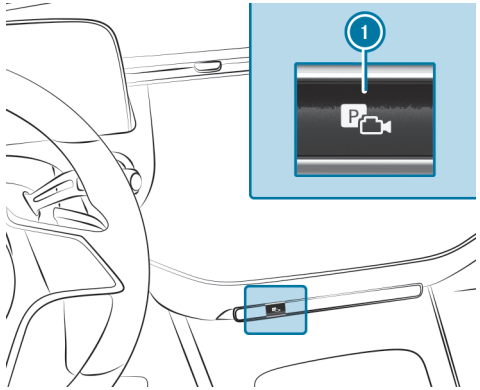

► Press the button 1.
The Camera & parking view opens on the central display.



► Select the Memory Parking Assist 2 menu.

STARTING THE UNPARKING PROCEDURE

► Press ▶.

► Confirm the saved unparking procedure.

► Follow the instructions on the central display.
The vehicle drives the recorded route.

ⓘ The turn signal indicator is not switched on automatically. You are responsible for selecting the turn signal indicator in accordance with the traffic conditions.

► Take control of the vehicle after the unparking procedure has been completed.

SETTING MEMORY PARKING ASSIST

Multimedia system:

Settings » Assistance » Parking » Memory Parking Assist

RENAMING A RECORDING

- Select next to the desired recording.
- Enter a name and confirm with OK.

DELETING A RECORDING

- Select next to the desired recording.
- Confirm the prompt.

DELETING ALL RECORDINGS

- Select Delete all lanes.
- Confirm the prompt.

ⓘ Alternatively, all data can be deleted from Memory Parking Assist by resetting the multimedia system (⟶ page 597).

Trailer Manoeuvring Assist

FUNCTION OF TRAILER MANOEUVRING ASSIST

ⓘ This function can be a Digital Extra (⟶ page 114).

WARNING

Risk of accident due to unsuitable trailers

Trailers with a steered axle or a fifth wheel cannot be used with Trailer Manoeuvring Assist.

Due to this, the trailer cannot be manoeuvred in the desired direction and you can cause a collision or the trailer can overturn.

- Only use Trailer Manoeuvring Assist with trailers with fixed drawbars and axles.

NOTE

Damage due to overhanging loads in front or drawbar installations

The vehicle and the trailer may be damaged during manoeuvring due to overhanging loads at the front of the trailer or drawbar installations.

- Pay attention to overhanging loads or drawbar installations while manoeuvring.

Trailer Manoeuvring Assist assists you when reversing with a trailer. The reversing camera monitors the articulation angle between the vehicle and the trailer and adjusts it to a specified value. Trailer Manoeuvring Assist also limits your speed.

Trailer Manoeuvring Assist serves solely as an aid. It is not a substitute for you having to pay attention to your surroundings. The responsibility for safe manoeuvring, parking and unparking remains with you at all times. Ensure that there are no persons, animals or objects etc. in the manoeuvring area while manoeuvring and parking in/exiting parking spaces.

You can enter the articulation angle value directly via the multimedia system, or use a straightening or 90° manoeuvre. When carrying out a straightening manoeuvre, the system calculates the articulation angle automatically and straightens the vehicle/trailer combination to the trailer's current direction.

Observe the notes on trailer operation (⟶ page 503).

SYSTEM LIMITS

OBSERVE THE SYSTEM LIMITS OF THE FOLLOWING FUNCTIONS:

- Active Parking Assist (⟶ page 482)
- 360° camera (⟶ page 473)
- Reversing camera (⟶ page 471)

THE SYSTEM MAY BE IMPAIRED OR INOPERATIVE IN THE FOLLOWING SITUATIONS:

- The uphill gradient is greater than approximately 15 %.

USING TRAILER MANOEUVRING ASSIST

Requirements:

- The vehicle has been started and is stationary.
- A trailer is selected in the Vehicle menu (⟶ page 510).
- A trailer has been detected.
- The uphill gradient is less than approximately 15 %.
- The boot lid is closed.
- The electric parking brake is not applied.
- The driver's seat belt is fastened.

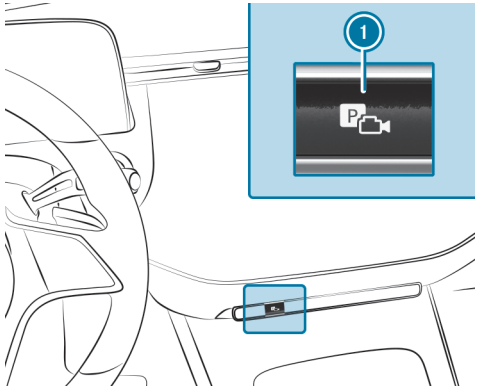

- ▶ Engage reverse gear [R].
- ▶ Press the button (1).
  The camera image is shown on the central display.
- ▶ Take your hands off the steering wheel.

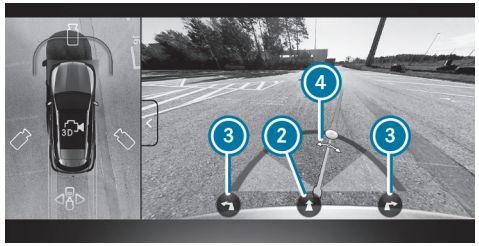

ⓘ This image is shown as an example and is without trailer.

You can select various manoeuvres in the Trailer Manoeuvring Assist menu. The manoeuvres available depend on the trailer's current articulation angle and length.

- To adjust the articulation angle: select (4). To change the articulation angle, swipe to the left or to the right across the entire range of the camera image in the central display.

or

- To activate the straightening manoeuvre: select (2).

  The system calculates the articulation angle in such a way that the direction of the trailer at the time of activation is maintained. There is a short countersteering movement of the trailer while the vehicle is reversing, which then guides it back to the desired line. This allows the vehicle to align with the trailer, while at the same time maintaining the trailer's direction.

or

- To activate the 90° manoeuvre:
  - Align the vehicle in the same direction (line) as the trailer.
  - Select (3) (left or right).

  The system calculates the articulation angle so that a trailer can be manoeuvred into a driveway at the most acute angle possible when it is perpendicular to its own vehicle. After the manoeuvre, the vehicle is aligned again in the trailer's direction.
- Accelerate and brake as required.

ⓘ The maximum articulation angle depends on the length of the trailer. The system calculates this by driving the vehicle forwards, including cornering. Before the trailer length has been calculated, the maximum articulation angle is approximately 23°. The longer the trailer, the greater the maximum articulation angle (max. approximately 60°).

ⓘ Be aware of all surroundings and always remain ready to brake.

Trailer hitch

Notes on trailer operation

NOTE
The operating permit may be invalidated due to the illegal installation of trailer hitches

The installation – including retrofitting – of a non-folding or non-removable trailer hitch that even partially conceals the license plate or the lighting system is prohibited.

- Observe the applicable legal regulations for the installation of trailer hitches.

WARNING
Risk of accident due to car/trailer combination swerving

If you drive too fast in trailer operation, the car/trailer combination may start to swerve.

This could cause you to lose control of the car/trailer combination. The car/trailer combination may even overturn.

- Under no circumstances should you try to straighten the car/trailer combination by increasing your speed.
- Reduce the speed and do not countersteer.
- Brake if necessary.

NOTE
Damage to the engine due to overheating

- If you have a trailer hitch retrofitted, modifications to the engine cooling system may be necessary depending on the vehicle type.

If you have a trailer tow hitch retrofitted, observe the fastening points on the vehicle frame.

Retrofitting a trailer hitch is permissible only if a trailer load is specified in your vehicle documents. If this is not the case, the vehicle is not approved for trailer operation.

Further information can be obtained at a qualified specialist workshop.

OBSERVE THE FOLLOWING NOTES ON THE TONGUE WEIGHT:

- do not use a tongue weight that exceeds or falls below the permissible tongue weight
- use a tongue weight as close as possible to the maximum tongue weight

DO NOT EXCEED THE FOLLOWING VALUES:

- permissible trailer load
- permissible rear axle load of the towing vehicle
- permissible gross mass of the towing vehicle
- permissible gross mass of the trailer
- maximum permissible speed of the trailer

ENSURE THE FOLLOWING BEFORE STARTING A JOURNEY:

- the tyre pressure on the rear axle of the towing vehicle is set for a maximum load
- the lighting of the connected trailer is operational

In the event of increased rear axle load, the car/trailer combination may not exceed a maximum speed of 100 km/h for reasons concerning the operating permit. This also applies in countries in which the permissible maximum speed for car/trailer combinations is above 100 km/h.

When you are reversing with a trailer, remember to use the Trailer Manoeuvring Assist function (→ page 500).

Swinging the ball neck in and out fully electrically

WARNING
Risk of accident due to the ball neck not being engaged

If the ball neck is not engaged, the trailer may come loose.

► Make sure that the ball neck securely engages and locks into place.

NOTE
Damage to the all-electric trailer hitch due to additional pressure

The all-electric trailer hitch could be mechanically damaged by applying additional pressure when the ball neck is being extended or retracted.

► Do not make the ball neck extend/retract faster by applying additional pressure.

NOTE
Increased risk of damage to property due to folded-out ball neck

- When the trailer is not coupled or the bicycle rack is attached, fold in the ball neck or, in the case of a fully electric trailer hitch, retract the ball neck.

NOTE
Damage to the vehicle due to incorrect use of the trailer hitch

If a trailer hitch is used to recover the vehicle, the vehicle or the trailer hitch itself may be damaged in the process.

- Use the trailer hitch only for pulling a trailer or attaching approved carrier systems (e.g. a bicycle rack).

  Exception: Since vehicles with a trailer hitch do not have a fixture for a towing eye at the rear, towing or tow-starting is permitted.

- When towing or tow-starting with the trailer hitch, observe the information in the section "Fitting and removing the towing eye."

SWINGING OUT THE BALL NECK FULLY ELECTRICALLY

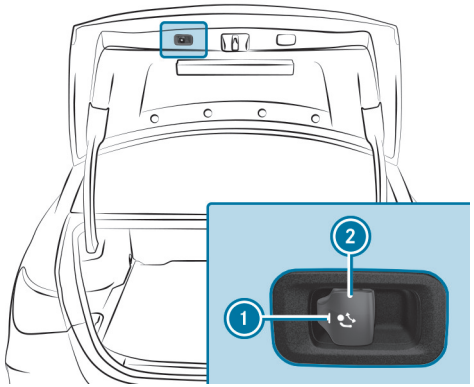

- Secure the vehicle against rolling backwards or forwards.
- Keep the swivel range clear.
- Pull the button (2).

  The indicator lamp (1) begins flashing and a display message reading Trailer coupling in motion appears on the driver display.

  The ball neck swings out fully electrically.
- Wait until the ball neck has reached the swung-out position with a distinct locking noise.

  When the indicator lamp (1) lights up continuously, the ball neck is securely locked in place.

  If the ball neck is not securely locked in place, the indicator lamp (1) begins flashing and a display message reading Trailer coupling Check lock appears on the driver display.

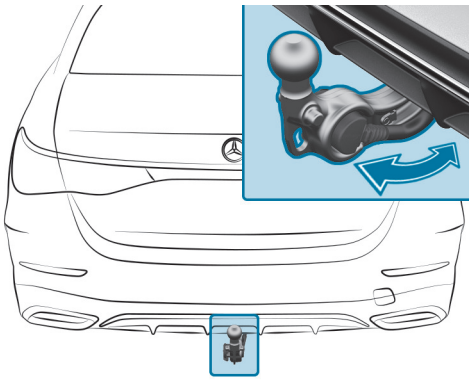

SWINGING IN THE BALL NECK FULLY ELECTRICALLY

- ► Secure the vehicle against rolling backwards or forwards.
- ► Remove the trailer cable or adapter plug.
- ► Pull the button (2).

  The indicator lamp (1) begins flashing and a display message reading Trailer coupling in motion appears on the driver display.

  The ball neck swings in fully electrically.
- ► Wait until the ball neck has reached the swung-in locked position.

  When the indicator lamp (1) goes out, the ball neck is securely locked in place.

  If the ball neck is not securely locked in place, the indicator lamp (1) begins flashing and a display message reading Trailer coupling Check lock appears on the driver display.

OBSERVE THE INFORMATION ON NOTIFICATIONS ON THE DRIVER DISPLAY:

- Indicator lamps and warning lamps (⟶ page 968)
- Display messages (⟶ page 887)

Extending and retracting the ball neck fully electrically (multimedia system)

WARNING
Risk of accident due to the ball neck not being engaged

If the ball neck is not engaged, the trailer may come loose.

► Always engage the ball neck as described.

NOTE
Damage to the all-electric trailer hitch due to additional pressure

The all-electric trailer hitch could be mechanically damaged by applying additional pressure when the ball neck is being extended or retracted.

► Do not make the ball neck extend/retract faster by applying additional pressure.

Requirements:

- The vehicle is secured against rolling away.
- The swivel range is clear.
- The trailer cables or adapter plugs have been removed.

Multimedia system:



EXTENDING THE BALL NECK FULLY ELECTRICALLY

- Select [ ].

  The Trailer coupling in motion display message will appear on the driver display.

  The ball neck will extend fully electrically.

- Wait until the ball neck has locked in place.

If the ball neck is not securely locked in place, the Trailer coupling Check lock message will appear on the driver display.

RETRACTING THE BALL NECK FULLY ELECTRICALLY

- Select [ ].

  The Trailer coupling in motion display message will appear on the driver display.

  The ball neck will retract fully electrically.

- Wait until the ball neck has locked in place.

If the ball neck is not securely locked in place, the Trailer coupling Check lock message will appear on the driver display.

OBSERVE THE INFORMATION ABOUT THE INDICATORS ON THE INSTRUMENT CLUSTER:

- Indicator and warning lamps (⟶ page 968)
- Display messages (⟶ page 887)

Coupling/uncoupling a trailer

WARNING
Risk of injury due to a change in vehicle level

Vehicles with AIRMATIC: the vehicle level may be changed unintentionally, e.g. by other persons. If you couple or uncouple the trailer during this time, you may become trapped. In addition, other people could become trapped if their limbs are between the vehicle body and the tyres or underneath the vehicle.

Observe the following when coupling or uncoupling:

- Do not open or close any doors or the boot lid.
- Do not initiate the level control system and do not operate DYNAMIC SELECT.
- Do not lock or unlock the vehicle.

THE TRAILER WILL BE CORRECTLY DETECTED BY THE VEHICLE ONLY IF THE FOLLOWING CONDITIONS ARE MET:

- The ball neck is extended and engages in a securely locked position.
- **Vehicles with AIRMATIC:** ensure that the vehicle is at a normal level (⟶ page 467).

  Use normal level in trailer operation. Driving at off-road level is not permitted in trailer operation on public roads.
- A trailer type is selected in the Vehicle menu (⟶ page 510).

THE TRAILER WILL BE CORRECTLY DETECTED BY THE VEHICLE ONLY IF THE FOLLOWING CONDITIONS ARE MET:

- the trailer is connected correctly
- the trailer lighting system is in working order

A CORRECTLY CONNECTED TRAILER INFLUENCES THE FUNCTIONS OF THE FOLLOWING SYSTEMS, FOR EXAMPLE:

- ESP® trailer stabilisation
- Trailer Manoeuvring Assist
- Active Lane Keeping Assist
- Parking Assist PARKTRONIC
- Active Parking Assist
- Blind Spot Assist
- Active Blind Spot Assist
- Drive-Away Assist
- Cross traffic warning
- Close-range braking
- Reversing camera
- 360° camera
- AIRMATIC

COUPLING A TRAILER

NOTE
Damage to the starter battery due to full discharge

Charging the trailer battery using the power supply of the trailer can damage the starter battery.

► Do not use the vehicle's power supply to charge the trailer battery.

TRAILERS WITH A 7-PIN PLUG CAN BE CONNECTED TO THE VEHICLE WITH THE FOLLOWING ADAPTERS:

- adapter plug
- adapter cable

► Secure the vehicle against rolling backwards or forwards.

► Remove the cover cap from the ball head and store it in a safe place.

► Position the trailer on a level surface behind the vehicle and couple it with the vehicle.



- ► Open the socket cap.
- ► Insert the plug with the lug (1) in the groove (3) on the socket.
- ► Turn the bayonet coupling (2) in a clockwise direction as far as it will go.
- ► Allow the cap to engage.
- ► Secure the cable to the trailer with cable ties (when using an adapter cable only).
- ► Ensure that the cable exhibits ample freedom of movement for cornering manoeuvres.

IN THE FOLLOWING CIRCUMSTANCES, A MESSAGE MAY APPEAR ON THE DRIVER DISPLAY, EVEN IF THE TRAILER HAS BEEN CONNECTED CORRECTLY:

- LEDs have been installed in the trailer lighting system.
- The current level has fallen below the trailer lighting system's minimum current level (50 mA).

ⓘ Accessories can be connected to the permanent power supply up to 180 W and to the power supply that is switched on via the ignition lock.

UNCOUPLING A TRAILER

⚠ **WARNING**
Risk of being crushed and becoming trapped when uncoupling a trailer

When uncoupling a trailer with an engaged inertia-activated brake, your hand may become trapped between the vehicle and the trailer drawbar.

► Do not uncouple trailers with an engaged overrun brake.

NOTE
Damage during uncoupling with an engaged overrun brake

The vehicle may be damaged if you uncouple with an engaged overrun brake.

► Do not uncouple trailers with an engaged overrun brake.

⚠ **WARNING**
Risk of becoming trapped when disconnecting the trailer cable

Vehicles with AIRMATIC: the vehicle may lower when you disconnect the trailer cable.

This could result in other people becoming trapped if their limbs are between the vehicle body and the tyres or underneath the vehicle.

► Make sure nobody is underneath the vehicle or in the immediate vicinity of the wheel arches when you disconnect the trailer cable.

NOTE
Damage to the rear bumper from installing adapter cables or adapter plugs

THE FOLLOWING PARTS COULD BE DAMAGED WHEN SWIVELING THE BALL NECK FULLY ELECTRICALLY:

- Bumper
- Adapter cable
- Adapter plug

► Always remove the adapter cable or adapter plug before swiveling the ball neck fully electrically.

► Secure the vehicle against rolling backwards or forwards.

► Disconnect the electrical connection between the vehicle and the trailer.

► Uncouple the trailer.

► Fit the cover cap on the ball head.

Trailers with LED lighting: after uncoupling the trailer, switch the vehicle on and then off again.

Configuring settings for trailer operation

Multimedia system:

Settings » Vehicle » Driving » Trailer type

CONFIGURING SETTINGS FOR A TRAILER
The settings on this menu make it possible to calculate a route suitable for the selected trailer and optimise the calculated arrival time.

► Select the desired trailer type.

► Enter the maximum permissible speed of the selected trailer.

► **To save changes:** select Confirm.

Bicycle rack function

WARNING
Risk of accident due to improper handling of the bicycle rack

THE BICYCLE RACK MAY DETACH FROM THE VEHICLE IN THE FOLLOWING CASES:

- If the permissible load capacity of the trailer hitch is exceeded.
- If the bicycle rack is used incorrectly.
- If the bicycle rack is attached to the ball neck below the ball head.

FOR YOUR SAFETY AND THE SAFETY OF OTHER ROAD USERS, OBSERVE THE FOLLOWING:

- Always adhere to the permissible load capacity of the trailer hitch.
- Always observe the permissible rear axle load of the towing vehicle.
- Use the bicycle rack only for transporting bicycles.
- Always secure the bicycle rack properly by attaching it to the ball head and, if possible, also to the guide pins of the ball neck.
- When transporting four bicycles, always use bicycle racks with additional support on the guide pins of the ball neck.
- Use only bicycle racks approved by Mercedes-Benz.
- Always observe the operating instructions of the bicycle rack.

NOTE
Damage to or breakage of the trailer hitch due to unsuitable or improperly used bicycle rack.

► Only use bicycle racks approved by Mercedes-Benz properly as described below.

NOTE
Increased risk of damage to property due to folded-out ball neck

► When the trailer is not coupled or the bicycle rack is attached, fold in the ball neck or, in the case of a fully electric trailer hitch, retract the ball neck.

NOTE
The operating permit may be invalidated due to the illegal installation of trailer hitches

The installation – including retrofitting – of a non-folding or non-removable trailer hitch that even partially conceals the license plate or the lighting system is prohibited.

► Observe the applicable legal regulations for the installation of trailer hitches.

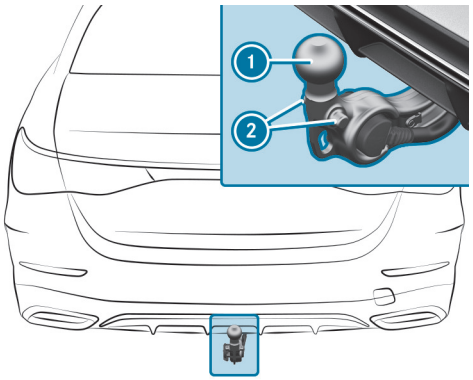

Trailer hitch with additional guide pin

Depending on the bicycle rack's design, different numbers of bicycles can be transported.

THE FOLLOWING BICYCLE RACK DESIGNS ARE POSSIBLE:

- When mounted by attaching to the ball head (1), the maximum load capacity is 75 kg. You can transport up to three bicycles.
- When mounted on ball head (1) and guide pin (2), the maximum load capacity is 100 kg. You can transport up to four bicycles.

The maximum load capacity is calculated from the weight of the bicycle rack and the bicycle rack load.

Observe the notes on driving with a roof load, trailer or fully laden vehicle (⟶ page 333).

When using a bicycle rack, adjust the tyre pressure for increased load on the rear axle of the vehicle. Additional information regarding tyre pressure can be found in the tyre pressure table (⟶ page 774).

NOTES ON LOADING

The greater the distance between the load's centre of gravity and the ball head, the greater the load on the trailer hitch.

OBSERVE THE FOLLOWING NOTES:

- mount heavy bicycles as close to the vehicle as possible
- always distribute the load on the bicycle rack as evenly as possible across the vehicle's longitudinal axis

Mercedes-Benz recommends removing all detachable parts from bicycles (e.g. baskets, child seats, rechargeable batteries) before loading them onto the bicycle rack. This will improve the aerodynamic resistance and centre of gravity of the bicycle rack.

Always secure the bicycles to prevent them from moving around and check them at regular intervals to ensure that they are secure.

Do not use tarps or other covers. The driving characteristics and rear view may be impaired. Moreover, aerodynamic resistance, and therefore the load on the trailer hitch increases.

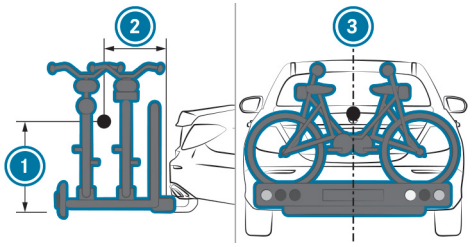

Load distribution on the bicycle rack

(1) Vertical distance between centre of gravity and ball head
(2) Horizontal distance between centre of gravity and ball head
(3) The centre of gravity is on the vehicle's centre axle.

Observe the following information when loading the bicycle rack:

THE LOAD ON THE BICYCLE RACK (NO MORE THAN THREE BICYCLES)

	Attached without additional guide pins
Total weight of bicycle rack and load	Up to 75 kg
Max. distance (1)	420 mm
Max. distance (2)	300 mm

THE LOAD ON THE BICYCLE RACK (NO MORE THAN FOUR BICYCLES)

	Attached with additional guide pins
Total weight of bicycle rack and load	Up to 100 kg
Max. distance (1)	420 mm
Max. distance (2)	400 mm

When transporting four bicycles or a total weight between 75 kg and 100 kg, always use bicycle racks with additional support on both trailer hitch guide pins.

Vehicle towing instructions

The vehicle is not suitable for the use of tow bar systems that are used for flat towing or dinghy towing, forexample. Attaching and using tow bar systems may result in damage to the vehicle. When you are towing a vehicle with tow bar systems, safe driving characteristics cannot be guaranteed for the towing vehicle or the towed vehicle. The vehicle-trailer combination may swerve from side to side.

OBSERVE THE FOLLOWING INFORMATION:

- Permitted towing methods (⟶ page 754)
- **Plug-in hybrid:** permitted towing methods (⟶ page 755)
- The notes on towing the vehicle with both axles on the ground (⟶ page 75)

Back to Contents

Driver display

This interactive PDF works like a website – tap or click a button to jump straight to where you want to go. You can return here at any time via the navigation bar at the top left.

Notes on the driver display
Notes on the 3D driver display
Driver display fault
Operating the driver display
Driver display menus
Head-up display
Vehicles with a 48 V on-board electrical system
Function of the power meter (Mercedes-AMG vehicles)
Function of the power meter (plug-in hybrid vehicles)
Overview of status indicators on the driver display (Mercedes-AMG vehicles)
Overview of status indicators on the driver display

Notes on the driver display

WARNING
Risk of accident if the driver display malfunctions

if the driver display is inoperative or its functions are restricted, you will not receive information about such issues as other function restrictions, speed, current drive range and the status of the electric parking brake.

This will impair operating safety.

- ► Stop the vehicle immediately in accordance with the traffic conditions and switch it off. Do not continue driving.
- ► Consult a qualified specialist workshop.
- ► Have the vehicle transported rather than towed.

If the operating safety of your vehicle is impaired, park the vehicle immediately observing safe traffic conditions. Notify a qualified specialist workshop.

THE DRIVER DISPLAY SHOWS THE FOLLOWING BASIC INFORMATION:

- Indicator lamps and warning lamps
- Speed and engine speed
- Transmission position
- Fuel level or state of charge

ADDITIONAL AVAILABLE FUNCTIONS INCLUDE THE FOLLOWING, FOREXAMPLE:

- Various menus, such as Assistance and Navigation
- Status displays for the driving systems
- Display messages
- Information regarding Consumption and Range
- Power meter level and state of charge of the high-voltage battery

ADDITIONAL INDICATORS FOR PLUG-IN HYBRID VEHICLES:

- READY Drive system is activated
  "Foot off the accelerator" (→ page 340, 343)

Some menu content and settings can be changed. (→ page 522)

Notes on the 3D driver display

WARNING
Risk of accident if the driver display fails

If the driver display has failed or is malfunctioning, function restrictions in systems relevant to safety cannot be detected.

The operating safety of your vehicle may be impaired.

- ► Drive on carefully.
- ► Have the vehicle checked immediately at a qualified specialist workshop.

If the operating safety of your vehicle is impaired, park the vehicle immediately and safely. Contact a qualified specialist workshop.
The 3D driver's display enables a three-dimensional representation of the content of the driver's display. This requires the driver to be recorded by the driver camera.

THE SYSTEM MAY BE IMPAIRED OR MAY NOT FUNCTION IN THE FOLLOWING SITUATIONS:

- The driver camera is deactivated or is not working.
- The driver is outside the detection range of the driver camera.
- The operating conditions are not in place, e.g. if the outside temperature is too low or too high.

Driver display fault

WARNING
Risk of accident if the driver display malfunctions

if the driver display is inoperative or its functions are restricted, you will not receive information about such issues as other function restrictions, speed, current drive range and the status of the electric parking brake.

This will impair operating safety.

- ► Stop the vehicle immediately in accordance with the traffic conditions and switch it off. Do not continue driving.
- ► Consult a qualified specialist workshop.
- ► Have the vehicle transported rather than towed.

Identifying a driver display fault

A DRIVER DISPLAY FAULT CAN BE IDENTIFIED BY CHARACTERISTICS SUCHAS THE FOLLOWING:

- When the vehicle is switched on, the driver display continues to show nothing but a black screen.
- The driver display restarts.
- The content freezes.
- The display stops showing data suchas speed. Various indicator lamps and warning lamps are also displayed.

The driver display is also inoperative during an update.

What to do in the event of a driver display fault

If the driver display is inoperative or its functions are restricted, stop the vehicle immediately in accordance with the traffic conditions and switch off the vehicle. The following procedure is recommended for this eventuality:

- ► Stop the vehicle in accordance with the traffic conditions.
- ► With the vehicle at a standstill, continue to depress the brake pedal.
- ► Press the button P on the DIRECT SELECT lever.
- ► Apply the parking brake.
- ► Slowly release the brake pedal and ensure that the vehicle is secured against rolling backwards or forwards.
- ► Press and hold the start/stop button (→ page 399) once for approximately three seconds to switch off the drive system.
- ► Contact a qualified specialist workshop immediately.
- ► Have the vehicle transported rather than towed.

ⓘ In addition, note the additional information on switching off the vehicle (→ page 399)and the notes on transporting the vehicle (→ page 760, 757).

Operating the driver display

WARNING
Risk of distraction from information systems and communications equipment

If you operate information systems and communication devices integrated in the vehicle when driving, you could be distracted from the traffic situation. This could also cause you to lose control of the vehicle.

- Only operate this equipment when the traffic situation permits.
- If you cannot be sure of this, stop the vehicle whilst paying attention to road and traffic conditions and operate the equipment with the vehicle stationary.

Observe the legal requirements for the country in which you are currently driving when operating the driver display.

SCROLLING ON THE MENU BAR

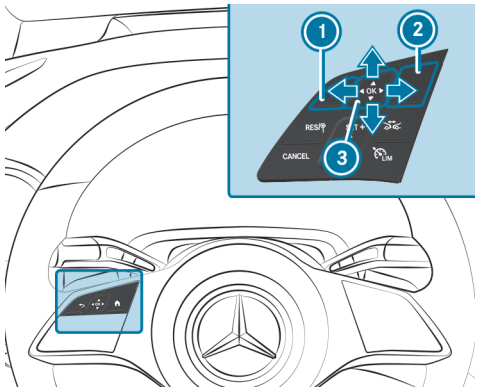

1. Back button
2. Main menu button
3. Touch Control

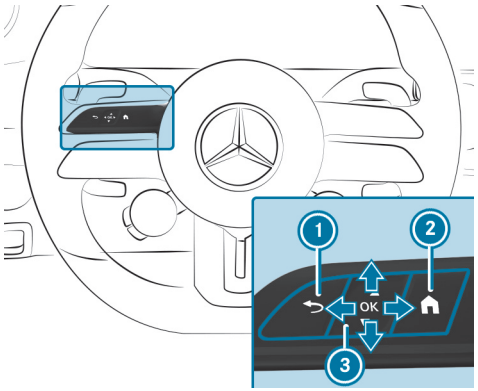

Mercedes-AMG vehicles

1 Back button
2 Main menu button
3 Touch Control

The control elements on the left of the steering wheel manage the content of the driver display. Swipe with your finger on Touch Control 3 to navigate vertically or horizontally through the content. Press the Touch Control to confirm your selection.

ⓘ Use the tip of your thumb to operate Touch Control 3 to maximum effect. Set the sensitivity of the Touch Control on the central display. (⟶ page 566)

- Briefly press the main menu button 2.
- Select a menu by swiping to the left or right on the Touch Control 3.
- **To confirm:** press Touch Control 3.

You can watch an animation on this topic via the following link:

Driver display menus

Notes on menus on the driver display

WARNING
Risk of distraction from information systems and communications equipment

If you operate information systems and communication devices integrated in the vehicle when driving, you could be distracted from the traffic situation. This could also cause you to lose control of the vehicle.

- ► Only operate this equipment when the traffic situation permits.
- ► If you cannot be sure of this, stop the vehicle whilst paying attention to road and traffic conditions and operate the equipment with the vehicle stationary.

Observe the legal requirements for the country in which you are currently driving when operating the driver display.

THE FOLLOWING MENUS CAN BE CALLED UP VIA THE MENU BAR ON THE DRIVER DISPLAY:

- Mercedes-AMG vehicles: TRACK PACE
- Sport
- Mercedes-AMG vehicles: Supersport
- Classic
- Navigation
- Assistance
- Offroad (equipment-dependent)
- Service

In some of the menus, you can choose between different display content in the centre display area.

On most of the menus, you can use Options to configure further settings for the menu-specific display content.

You can watch an animation on this topic via the following link:

Calling up and using menus on the driver display

CALLING UP A MENU VIA THE DRIVER DISPLAY MENU BAR

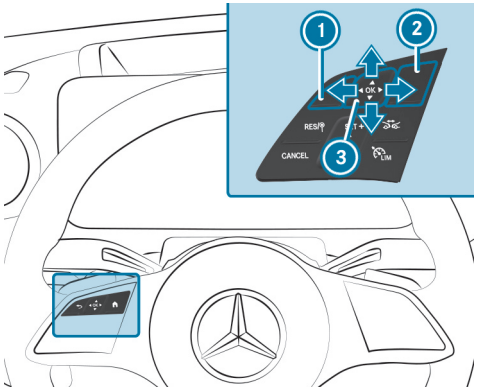

1 Back button
2 Main menu button
3 Touch Control

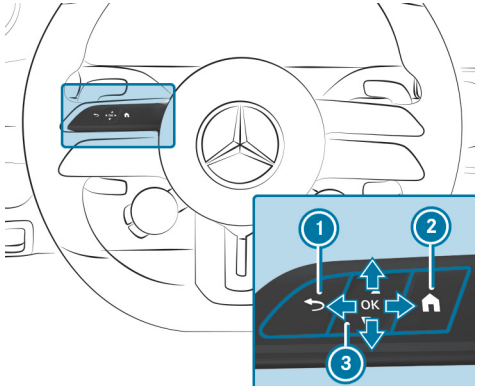

Mercedes-AMG vehicles

1 Back button
2 Main menu button
3 Touch Control

► Press the main menu button 2 on the steering wheel.
The menu bar will be shown in the lower area of the driver display.



Vehicles with combustion engines



Plug-in hybrid

- Select a menu on the menu bar by swiping to the left or right on Touch Control (3).
- **To confirm:** press Touch Control (3).

BROWSING THROUGH DISPLAY CONTENT OR LISTS

- Swipe horizontally or vertically on Touch Control (3).

ⓘ On some menus, an index character at the right edge of the centre display section indicates the current position of the information.

PRESETTING DISPLAYS

Custom-configured menu content can be set as the standard display.

- Press and hold Touch Control (3) until the displayed bar is completely filled.
  The prompt Set direct entry? will appear.
- Swipe to the left on Touch Control (3) and select Yes.
- **To confirm:** press Touch Control (3).
- **To show standard displays:** press the back button (1) on the upper level of a menu.

ⓘ Pressing the back button (1) on the standard display will open the previous menu.

CALLING UP OR EXITING THE OPTIONS SUBMENU

Depending on the information in the centre display content, you can configure various settings in the Options submenu.

- **To call up the Options submenu and confirm a selection:** press Touch Control (3).
- **To exit the Options submenu:** press the back button (1).

THE FOLLOWING FUNCTIONS MAY BE AVAILABLE IN THE OPTIONS SUBMENU, FOREXAMPLE:

- Navigation: selecting and adjusting zoom, route guidance and map settings
- Classic: resetting the trip distance
- Classic: resetting the trip computer From start
- Classic: resetting the trip computer From reset
- Classic: resetting the ECO display values

Calling up the Classic menu

Driver display:

→ Classic

SELECTING CENTRE DISPLAY CONTENT

The Classic menu shows the driver display separated into speedometer and rev counter. The area in between can be filled with various types of information.

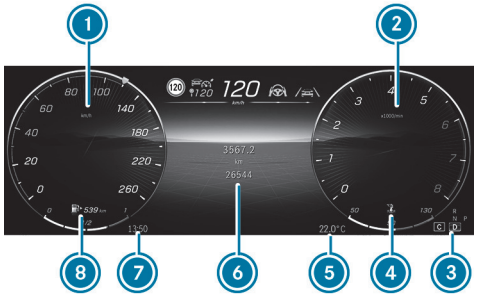

Vehicles with combustion engines

1. Speedometer
2. Rev counter
3. Transmission position
4. Coolant temperature
5. Outside temperature
6. Centre display content (example: trip distance)
7. Time
8. Fuel level and fuel filler flap location

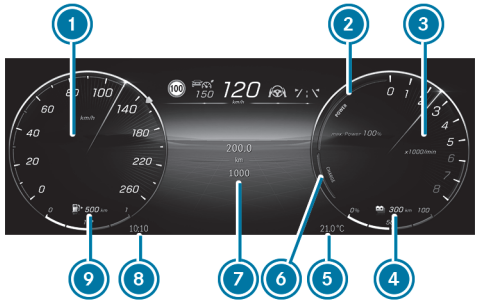

Plug-in hybrid

1. Speedometer
2. POWER display range
3. Rev counter and power meter level
4. Current state of charge for the high-voltage battery
5. Outside temperature
6. Display range of recuperated power
7. Centre display content (example: trip distance)
8. Time
9. Fuel level and fuel filler flap location

► Open the Classic menu via the driver display menu bar.

► **To select display content:** swipe upwards or downwards on the Touch Control and select the display content.

THE FOLLOWING INFORMATION CAN BE SHOWN IN THE CENTRE DISPLAY CONTENT:

- Trip and total distance
- Trip computer From start and From reset

- Driving time and distance covered in electric mode
- ECO display
- Range
- Consumption
- ATTENTION ASSIST
- Audio
- Navigation

ⓘ If you select navigation for the centre display content, you will see navigation instructions that vary depending on the driving situation.

ⓘ If you have selected information for the centre display content and switch to another menu, the selected information will be applied.



Trip computer (example)

① Proportion of driving performed in electric mode (distance travelled under electric power per total distance travelled)

INFORMATION REGARDING RANGE

- The actual range achieved may differ from the range displayed. Your previous driving style will be taken into account when the range is being calculated.
- Factors suchas outside temperature or climate control settings have a direct influence on the achievable range.
- While the navigation system or commuter route is active, additional information regarding the route ahead may be included in the range calculation.

INFORMATION ON ELECTRICAL CONSUMPTION

- The From start and From reset consumption figures take into account all active consumer equipment when it comes to the drive system's operational readiness READY.

INFORMATION ON THE PROPORTION OF DRIVING PERFORMED IN ELECTRIC MODE

- When the proportion of driving in electric mode is determined, only distances driven under the following conditions will be taken into account:
  - The combustion engine is switched off.
  - The Electric or Hybrid drive program is active.
  - The high-voltage battery is charged.

Distances travelled under electric power in the Battery Hold drive program or with a discharged high-voltage battery will not be taken into account in the proportion of driving performed in electric mode.

ⓘ To increase the distance covered in electric mode, charge the high-voltage battery as frequently as possible at a suitable charging facility.

CHANGING THE RADIO STATION OR TRACK ON THE STATION LIST OR TRACK LIST

You can change radio stations or tracks on the station list or track list in the centre display content with audio information.

THE FOLLOWING WILL BE ADJUSTED IN THE MBUX MULTIMEDIA SYSTEM:

- Configuring the station or track list
- Setting the frequency band



1 Track list in the centre display content (example)

► **To change radio stations or tracks:** swipe left or right on the Touch Control and select a radio station or track on the station list or track list 1.

ⓘ The radio station or track displayed when the vehicle is restarted depends on the user profile used for the previous trip.

Calling up the Service menu

Driver display:

↳ Service

The current status of the vehicle is shown on the Service menu.

► Open the Service menu via the driver display menu bar.

THE FOLLOWING DISPLAY CONTENT IS AVAILABLE IN THE SERVICE MENU (EQUIPMENT-DEPENDENT):

- Information on the number of messages in the message memory
- AdBlue: AdBlue® range and fill level
- Tyre pressure:
- ASSYST PLUS: calling up the service due date (⟶ page 713)
- Engine oil level: checking the engine oil level (⟶ page 43)
- Coolant indicator
- Mercedes-AMG vehicles with plug-in hybrid: temperature indicator (transmission oil, engine oil, coolant, high-voltage battery and high-voltage motor)

THE FOLLOWING FUNCTIONS ARE AVAILABLE IN THE OPTIONS SUBMENU:

- Tyre pressure (⟶ page 775)
  - Checking the tyre pressure with the tyre pressure monitoring system (⟶ page 775)
  - Restarting the tyre pressure monitoring system (⟶ page 775)

- Message memory (⟶ page 887)

Calling up the Assistance menu

Driver display:

→ Assistance

The Assistance menu displays different driver assistance systems and navigation instructions.

► Open the Assistance menu via the driver display menu bar.



Active Distance Assist DISTRONIC indicator on the assistant display (example)

IN VEHICLES WITH THE DRIVING ASSISTANCE PLUS PACKAGE, THE FOLLOWING DISPLAYS MAY VARY DEPENDING ON THE DRIVING SITUATION:

- The navigation instructions in the left-hand display section
- The traffic light view in the right-hand display section
- The display of the driver assistance systems
- The level of detail on the assistant display

In vehicles without the Driving Assistance Plus Package, your lane and the vehicle in front will be displayed.

THE FOLLOWING STATUS DISPLAYS ARE AVAILABLE ON THE ASSISTANT DISPLAY:

- Green: pedestrian detection active
- Grey: pedestrian detection activated, but no person detected
- Green radar waves next to vehicle: Blind Spot Assist or Active Blind Spot Assist activated and ready for operation
- Grey radar waves next to vehicle: Blind Spot Assist or Active Blind Spot Assist activated but not ready for operation

THE CONTENT ON THE ASSISTANT DISPLAY WILL ADAPT TO THE FOLLOWING SITUATIONS:

- Number of lanes detected
- Change of direction, e.g. lane change
- Current road conditions
- Road users detected

ⓘ The assistant display will not show other detected obstacles with the exception of road users.

THE FOLLOWING FUNCTIONS ARE AVAILABLE ON THE OPTIONS SUBMENU:

- Starting route guidance
- With active route guidance: end route guidance
- Call up previous destinations and favourites
- Start new route guidance to a recent destination
- Start new route guidance to a favourite

Calling up the Sport menu (Mercedes-AMG vehicles)

Driver display:

→ Sport

The Sport menu provides information about the engine data of the vehicle.

► Open the Sport menu via the driver display menu bar.

ⓘ When you call up the Sport menu on the menu bar of the driver display, the menu colour setting will automatically be applied to the MBUX multimedia system.

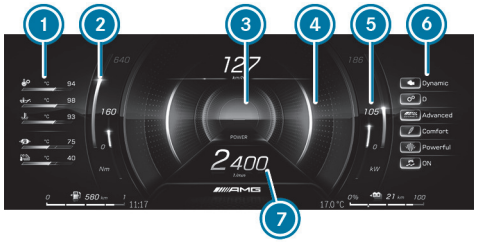

1. Temperature (transmission, engine oil, coolant, high-voltage motor and high-voltage battery)
2. Current torque (combustion engine and electric motor)
3. Electric drive support display and recuperation display
4. Engine speed (bar display)
5. Current output obtained (combustion engine and electric motor)
6. Setup (drive, AMG Dynamics, suspension, sound and ESP®)
7. Engine speed

ⓘ It is possible to configure settings for the drive system on the setup menu only when in the Individual drive program [I*].

ⓘ Depending on the vehicle equipment, AMG-specific content regarding temperature, setup and engine data will be displayed. You can set the display content either using the buttons on the multifunction steering wheel or via the MBUX multimedia system (⟶ page 354).
You can activate or deactivate ESP® either using the buttons on the multifunction steering wheel or via the MBUX multimedia system (⟶ page 420).

Calling up the Sport menu

Driver display:

→ Sport

The Sport menu shows information pertaining to the vehicle's engine data.

► Open the Sport menu via the driver display menu bar.

ⓘ When you call up the Sport menu on the driver display, the menu colour setting will automatically be applied to the MBUX multimedia system.



1 Current torque
2 G-meter
3 Current power output
4 Boost pressure
5 Engine oil temperature
6 Engine speed

Calling up the Sport menu (plug-in hybrid vehicles)

Driver display:

→ Sport

The Sport menu provides additional information pertaining to drive performance, as well as recuperated power of the vehicle.

► Open the Sport menu via the driver display menu bar.

ⓘ When you call up the Sport menu on the menu bar of the driver display, the menu colour setting will automatically be applied to the MBUX multimedia system.

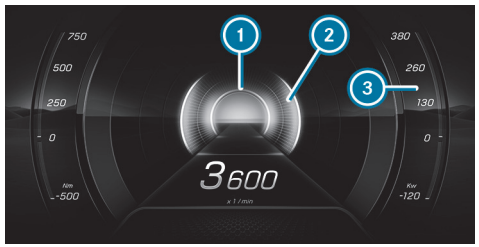

1 Display area for recuperated power (recuperation)
2 Display area for drive performance
3 Additional display area for drive performance

Calling up the Supersport menu (Mercedes-AMG vehicles)

Driver display:

→ Supersport

SELECTING THE CENTRE DISPLAY CONTENT



1 Current torque and recuperation display
2 Centre display content (example: selected gear and electric drive support display)
3 Current power and recuperation display

- Press the main menu button ⌂ on the steering wheel.
- Swipe to the left or right on the Touch Control to call up the Supersport menu on the menu bar of the driver display.
- **To select display content:** swipe upwards or downwards on the Touch Control.

ⓘ Displays ① and ③ vary depending on the centre display content.

THE CENTRE DISPLAY CONTENT SHOWS THE FOLLOWING INFORMATION:

- Transmission position display
- **Plug-in hybrid vehicles:** temperature indicator (transmission oil, engine oil, coolant, high-voltage battery and high-voltage motor)
- Setup (drive, AMG DYNAMICS, suspension and sound)
- G-force
- Trip and total distance
- Distance From start and From reset
- Consumption
- Audio
- Navigation

ⓘ Depending on the vehicle equipment, AMG-specific content regarding temperature, setup and engine data will be displayed. You can configure the setup display content either using the buttons on the multifunction steering wheel or via the MBUX multimedia system (→ page 354).

Calling up the Track Pace menu (Mercedes-AMG vehicles)

Driver display:

↳ TRACK PACE

The Track Pace function is intended only for closed-off race tracks. Do not use this function on public roads. Adapt your driving style to your personal capabilities and the environmental conditions.

THE FOLLOWING OPTIONS WILL BE DISPLAYED ON THE TRACK PACE **MENU:**

- G-meter
- Race track selected
- Braking and acceleration procedures
- Gear currently selected

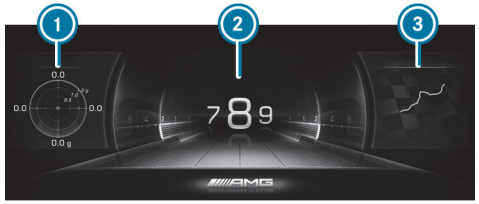

Track Pace menu (example)

① G-meter
② Centre display content (example: gear display and electric drive support display)
③ Telemetry (example: selected race track)

- Press the ⌂ main menu button on the steering wheel.

► Swipe to the left or right on the Touch Control to select the TRACK PACE menu on the menu bar of the driver display.

THE DISPLAY CONTENT OF THE TRACK PACE MENU WILL ADAPT TO THE SELECTED SETTINGS ON THE CENTRAL DISPLAY:

- Transmission position
- Electric drive support display
- Recuperated power display
- G-meter
- Braking points
- Acceleration procedures
- Quarter-mile
- Race track selected on the central display
- Current race
- Record route

While the vehicle is in motion, the G-meter shows the forces that are exerted on the vehicle occupants both laterally and in the direction of travel. The maximum values will be displayed in red in the coordinate system.

Calling up the off-road menu

Driver display:

→ Offroad

► Open the Offroad menu via the driver display menu bar.

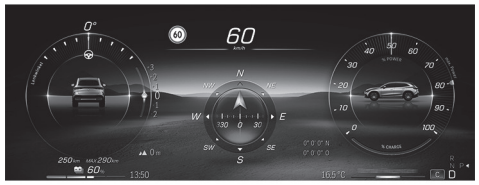

AMONG OTHER THINGS, THE MENU CONTAINS THE FOLLOWING INFORMATION:

- Steering angle
- Chassis height
- Elevation above sea level
- Compass with direction of travel
- Coordinates

ⓘ The availability of this menu is dependent on the equipment.

Calling up the Navigation menu

Driver display:

→ Navigation

The Navigation menu shows the relevant map with navigation instructions.

► Open the Navigation menu via the driver display menu bar.

CHANGING THE SCALE OF THE SELECTED MAP VIEW

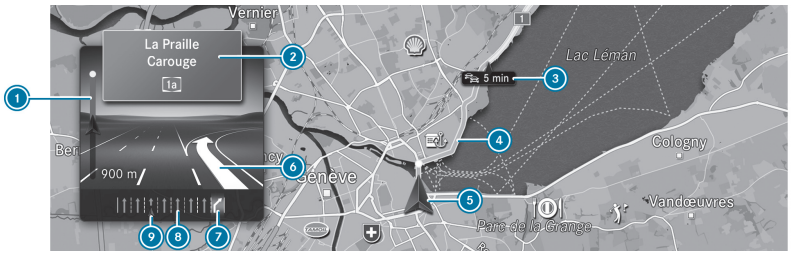

1. Distance to the change of direction
2. Road to which the change of direction leads
3. Traffic incident indicator
4. Currently selected route
5. Indicator showing vehicle's current position
6. Change-of-direction symbol
7. Recommended lane (white)
8. Lane not recommended (grey)
9. Current lane

ⓘ The level of detail in the navigation instructions in the left-hand display section may vary.

► **To zoom in and out on the map directly:** swipe upwards or downwards on the Touch Control.

ⓘ If you do not enter anything in auto zoom, the system will reset the scale of the map view already selected after a short time. The map scale is set permanently in the MBUX multimedia system (⟶ page 645).

THE FOLLOWING FUNCTIONS ARE AVAILABLE ON THE OPTIONS SUBMENU:

- With active route guidance: end route guidance
- Select route guidance
- Map settings

ⓘ If the current route guidance is ended on the Navigation menu on the driver display, it will also be ended in the MBUX multimedia system.

On the Options submenu, you can use other functions in the Destinations and Map settings categories.

THE FUNCTIONS IN THE DESTINATIONS CATEGORY INCLUDE:

- Call up previous destinations and favourites
- Start new route guidance to a favourite

ⓘ In Favourites, the options Work and Home will be displayed even if no address is stored.

THE FUNCTIONS IN THE MAP SETTINGS CATEGORY INCLUDE:

- Activate auto zoom
- Adjust the map view, satellite view and route overview

THE FOLLOWING MAP VIEWS ARE AVAILABLE ON THE NAVIGATION MENU:

- Entire route
- 2D direction of travel

- 2D north-up
- 3D map

There is an additional navigation view on the front passenger display. The front passenger can thus assist the driver with route guidance (→ page 632).

Head-up display

Function of the head-up display

The head-up display projects a variety of content into the driver's field of vision:

USE THE HEAD-UP DISPLAY MENU BAR TO SELECT DIFFERENT CONTEXTS, SUCHAS:

- Minimal
- Sport
- Standard
- Mercedes-AMG vehicles: Supersport
- Mercedes-AMG vehicles: TRACK PACE
- Mercedes-AMG vehicles: Race
- Offroad (equipment-dependent)
- Settings
- Activating/deactivating Head-up display

The following image shows an example of the head-up display. You can choose what content is displayed. (⟶ page 535)

HEAD-UP DISPLAY CONTENT WITH NAVIGATION (9X3°)

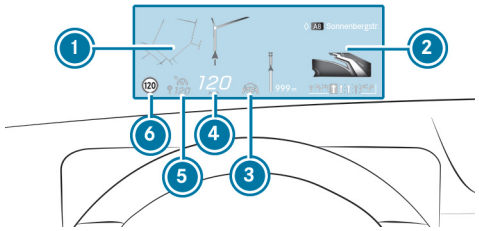

1. Navigation instructions
2. Navigation instructions (distance to the next route event)
3. Active Steering Assist status
4. Current speed
5. Set speed in the driving system (e.g. cruise control)
6. Detected traffic signs (Traffic Sign Assist)

When you receive a call, the head-up display and the driver display will show the Call waiting message.

The call will also be shown on the central display.

SYSTEM LIMITS

VISIBILITY IS INFLUENCED BY THE FOLLOWING CONDITIONS IN PARTICULAR:

- Seat position

- Image position setting
- Light conditions
- Wet road surfaces
- Objects on the display cover
- Polarisation in sunglasses

Operating the head-up display

SELECTING DISPLAY CONTENT OF THE HEAD-UP DISPLAY VIA THE MENU BAR OF THE DRIVER DISPLAY

- Press the main menu button [⌂] on the left.
- **To select the menu bar of the head-up display:** swipe upwards on the Touch Control.

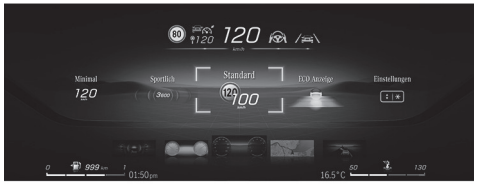

SWITCHING BETWEEN DISPLAY CONTENT ON THE HEAD-UP DISPLAY

- Swipe to the left or right on the Touch Control.

  A preview of the selected display content will appear on the head-up display.
- **To confirm:** press the [OK] button.

SWITCHING BACK TO THE DRIVER DISPLAY

- Press the [↩] or [⌂] button.

SETTING THE POSITION AND BRIGHTNESS

- Swipe to the left or right on the Touch Control and select Settings on the menu bar of the head-up display.
- Press the Touch Control.

  The current position and brightness settings will be displayed as graphics on the head-up display as well as on the driver display.
- **To adjust the position:** swipe upwards or downwards on the Touch Control.
- **To adjust the brightness:** swipe to the left or right on the Touch Control.

  The settings configured for position and brightness will be saved automatically.
- Press the [↩] or [OK] button to exit the settings.

Switching the head-up display on/off

Driver display:

→ [⌂]

SWITCHING ON

- Swipe upwards on the Touch Control.
- Press the Touch Control.

SWITCHING OFF

- Swipe upwards on the Touch Control.
- Swipe on the Touch Control and select Head-up display.
- Press the Touch Control.

Vehicles with a 48 V on-board electrical system



1. Electric drive support
2. Recuperation behaviour of the electric motor

Due to various system limits, the values displayed may temporarily differ slightly from the actual value.

Function of the power meter (Mercedes-AMG vehicles)

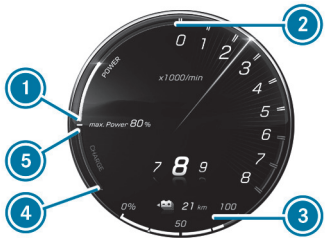

1. Start of the display range of the electric drive
2. End of the display range of the electric drive
3. Current state of charge of the high-voltage battery
4. Maximum recovered energy
5. Start of the display range of the recovered energy

THE POWER METER HAS THE FOLLOWING FUNCTIONS:

- In electric mode, area 1 – 2 shows what percentage of the electrical drive is currently being used. The combustion engine is switched on at a percentage of 100%. In boost mode, the electrical power assistance of the drive is displayed.
- The area 4 – 5 shows the recuperation and charging behaviour using the combustion engine.

ⓘ Due to various system limits, displayed value 4 may temporarily differ slightly from the actual value.

Function of the power meter (plug-in hybrid vehicles)

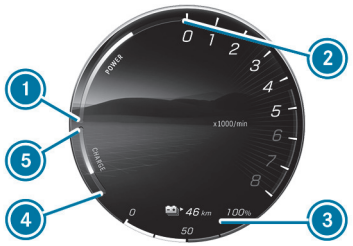

1. Start of the POWER display range
2. End of the POWER display range
3. Current state of charge of the high-voltage battery/remaining range
4. Maximum recovered energy
5. Start of the display range of the recovered energy

THE POWER METER HAS THE FOLLOWING FUNCTIONS:

- In electric mode, area 1 – 2 shows what percentage of the electrical drive is currently being used. The combustion engine is switched on at a percentage of 100%. In boost mode, the electrical power assistance of the drive is displayed.
- The area 4 – 5 shows the recuperation and charging behaviour using the combustion engine.

ⓘ Due to various system limits, displayed value 4 may temporarily differ slightly from the actual value.

Overview of status indicators on the driver display (Mercedes-AMG vehicles)

The status indicators for the driving and driving safety systems are shown in areas (1) and (6).

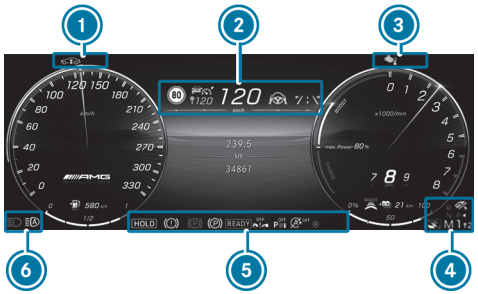

Vehicle with plug-in hybrid (example)

The number, position and presentation of the status indicators on the driver display depend on which systems are activated or deactivated.

DEPENDING ON THE RESPECTIVE EQUIPMENT, MERCEDES-AMG VEHICLES HAVE THE FOLLOWING STATUS INDICATORS:

- Pedestrian detection (on assistant display only) (⟶ page 527)
- Active Parking Assist is available (⟶ page 484)
- Active Parking Assist has detected a parking space (⟶ page 484)
- Parking Assist PARKTRONIC deactivated (⟶ page 481)
- Cruise control (⟶ page 425)
- LIM: Limiter (⟶ page 425)
- Active Distance Assist DISTRONIC (⟶ page 429)
- Specified distance for Active Distance Assist DISTRONIC (⟶ page 429)
- Active Brake Assist deactivated (⟶ page 453)
- Active Brake Assist impaired or inoperative (⟶ page 453)
- Active Steering Assist (⟶ page 439)
- Active Lane Change Assist (⟶ page 443)
- Active Lane Change Assist with automatic lane change (⟶ page 443)
- Active Lane Keeping Assist (⟶ page 463)
- Active Blind Spot Assist (on assistant display only) (⟶ page 459)
- READY: Plug-in-hybrid operation activated


Haptic accelerator pedal (⟶ page 345, 340, 343)


Sound generator inoperative (⟶ page 909)


ECO start/stop function (⟶ page 338)


Adaptive Highbeam Assist (⟶ page 286)

Adaptive Highbeam Assist Plus (⟶ page 288)


Active Stop-and-Go Assist (⟶ page 438)


Engine temperature warning lamp


AMG Real Performance Sound (⟶ page 346).


Display flashing: the vehicle level is being raised or lowered.

Display lit up: the vehicle is at high level.

Vehicles with Traffic Sign Assist: detected information and traffic signs (⟶ page 454)

Important information from other driving systems may briefly appear over the displayed traffic signs.

Overview of status indicators on the driver display

The status indicators for the driving and driving safety systems can be found in display sections 1 to 4.

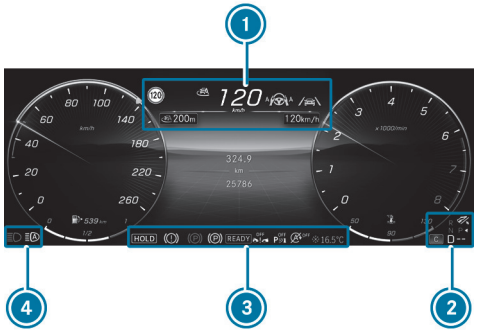

- Pedestrian detection (on assistant display only) (⟶ page 284)
- Active Parking Assist is available (⟶ page 484)
- Active Parking Assist has detected a parking space (⟶ page 484)
- Parking Assist PARKTRONIC deactivated (⟶ page 481)
- Cruise control (⟶ page 425)
- LIM Limiter (⟶ page 425)
- Active Distance Assist DISTRONIC (⟶ page 429)
- Specified distance for Active Distance Assist DISTRONIC (⟶ page 429)
- Active Brake Assist switched off (⟶ page 453)
- Active Brake Assist impaired or not functioning (⟶ page 453)
- Active Steering Assist (⟶ page 439)
- Active Lane Change Assist (⟶ page 443)
- Active Lane Change Assist with automatic lane change (⟶ page 443)
- Active Lane Keeping Assist (⟶ page 463)
- Active Blind Spot Assist (on assistant display only) (⟶ page 461)
- Blind Spot Assist (on assistant display only) (⟶ page 461)
- READY Plug-in hybrid operation activated
- Haptic accelerator pedal (⟶ page 345, 340, 343)
- Sound generator inoperative (⟶ page 909)
- ECO start/stop function (⟶ page 338)
- HOLD HOLD function (⟶ page 421)

 Adaptive Highbeam Assist (⟶ page 286)

Adaptive Highbeam Assist Plus (⟶ page 288)

 Maximum permissible speed exceeded (for certain countries only)

 Active Stop-and-Go Assist (⟶ page 438)

 Slippery road surface warning

Vehicles with Traffic Sign Assist: detected instructions and traffic signs (⟶ page 454)

Important information from other driving systems may briefly appear in front of the displayed traffic signs.

MBUX Voice Assistant

This interactive PDF works like a website – tap or click a button to jump straight to where you want to go.
You can return here at any time via the navigation bar at the top left.

Notes on operating safety
Operation
Using MBUX voice assistant effectively
Essential voice commands

Notes on operating safety

FOR YOUR OWN SAFETY, ALWAYS OBSERVE THE FOLLOWING POINTS WHEN OPERATING MOBILE COMMUNICATIONS EQUIPMENT AND ESPECIALLY YOUR VOICE ASSISTANT:

- Observe the legal requirements for the country in which you are driving.
- If voice control is used in an emergency situation, commands may be less easily recognised due to a change in voice.
- Familiarise yourself with the Voice Assistant functions before starting the journey.

The Voice Assistant does not replace the Owner's Manual.
The answers from the Voice Assistant do not provide the complete scope of information contained in the Owner's Manual. The Voice Assistant also does not give detailed warning or damage information. You can get the full scope of information about the function and safe operation of the systems and components in the vehicle in the Owner's Manual.

Operation

Function of the MBUX Voice Assistant

You can watch an animation on this topic via the following link:

Using the MBUX Voice Assistant, vehicle functions and various areas of the MBUX multimedia system can be operated by voice input, e.g. Navigation or Telephone. The MBUX Voice Assistant is operational about half a minute after switching on the vehicle and can be operated from all seats (depending on the special equipment).

Conducting a dialogue

STARTING A DIALOGUE

- Say **Hey Mercedes** to activate the MBUX Voice Assistant.

or

- Press the button on the multifunction steering wheel.

  A blue wave appears in the MBUX multimedia system. The dialogue can be started.

For the dialogue with the MBUX Voice Assistant, you can use complete sentences of colloquial language as voice commands. Voice activation can also be combined directly with a voice command, e.g. **Hey Mercedes, how warm is it outside?**

ⓘ If direct commands are switched on, the dialogue can be started with a direct question without using **Hey Mercedes**. Further information on direct commands.

INTERRUPTING THE DIALOGUE

- During the dialogue say **Pause**.

  The dialogue is interrupted.

- Say **Hey Mercedes** to continue the dialogue.

CHANGING DIALOGUE LEVEL

- During the dialogue, say **Back**.

  The MBUX Voice Assistant jumps back to the previous dialogue step.

NAVIGATING IN THE SELECTION LIST

If a voice command does not achieve a clear result, a selection list is shown.

- Say the line number or the content to select an entry or to have further details shown.
- Say **Next page** or **Previous page** to browse the selection list.

CALLING UP HELP

- **Information on the MBUX Voice Assistant:** call up the following app in the multimedia system: Hey Mercedes Info.

- **Current application:** say Help.
  You receive suggestions and information on operating the MBUX Voice Assistant .

Overview of the operable functions of the MBUX Voice Assistant

YOU CAN USE THE MBUX VOICE ASSISTANT TO OPERATE THE FOLLOWING FUNCTIONS DEPENDING ON THE VEHICLE EQUIPMENT:

- Telephone
- Text messages
- Navigation
- Radio and media
- Vehicle functions
- Online functions

Full functionality of the Voice Assistant is only available for you with activation of online voice control (⟶ page 546).

Information on the language setting

You can change the language of the MBUX Voice Assistant via the system language settings (⟶ page 593). If the set system language is not supported by the MBUX Voice Assistant, English will be selected.

Setting functions of MBUX Voice Assistant using the multimedia system

Multimedia system:
Settings » System » Intelligent assistants

SWITCHING VOICE ACTIVATION OF MBUX VOICE ASSISTANT ON OR OFF

For vehicles with driver camera or MBUX Interior Assistant, the MBUX Voice Assistant can be switched on or off in the Intelligent assistants menu.

- Select Hey Mercedes.
  When the function is active, the Hey Mercedes voice command can activate the dialogue.

SWITCHING DIRECT COMMANDS ON OR OFF

- Select ⚙.
- Activate or deactivate the function.
  If the function is active, under certain conditions, some commands can be used without Hey Mercedes, for example Navigate home.

The function can only be used if there are no other occupants in the vehicle.

SWITCHING VOICE ACTIVATION FOR INDIVIDUAL SEATS ON OR OFF

- Select ⚙.
- Switch the function for the desired seats on or off.

SWITCHING PROACTIVITY ON OR OFF

- Select Further settings.
- Select the desired situation, e.g. Activate your profile or Don't forget your phone.

  When the function is active, the MBUX Voice Assistant proactively provides information in specific situations.

ACTIVATING OR DEACTIVATING ONLINE VOICE CONTROL

Online voice control is activated at the factory.

- Select Online recognition.
- Activate or deactivate the function.

  If the function is switched on and a Mercedes-Benz user account is linked to the vehicle, additional results are available through external information, e.g. information on points of interest. By clicking the symbol in the blue wave, more information about the online voice control can be displayed.

Using MBUX voice assistant effectively

Notes on optimum use of the MBUX Voice Assistant

- The MBUX Voice Assistant is operational half a minute after switching on the vehicle and can be operated from all seats, depending on the equipment installed. The system recognises from which seat the command was spoken and performs actions according to the seat position.
- If a dialogue has been ended, the MBUX Voice Assistant continues to be active, as long as the blue wave is shown in the multimedia system. You can say another voice command without saying Hey Mercedes (→ page 546).
- If a user profile has been stored and is active, the MBUX Voice Assistant can make suggestions based on the habits of the user.
- With the MBUX Voice Assistant, incoming calls can be accepted or rejected without the keyword Hey Mercedes.

Information on the MBUX online voice assistant

The online voice control facilitates recognition and thanks to external information makes additional results available.

Therefore, Mercedes-Benz recommends that you activate online voice control (→ page 546).

To do this, you need a Mercedes-Benz user account and the MBUX Virtual Assistant service must be activated. If you do not yet have a user account you must create one and connect it with your vehicle (→ page 680).

Then call up your Mercedes-Benz user account. The Mercedes-Benz services are displayed and can be activated (→ page 681).

By clicking on the symbols displayed in the blue wave, further information on the online status is displayed.

WHEN ONLINE VOICE CONTROL IS ACTIVE, ADDITIONAL FUNCTIONS ARE AVAILABLE SUCH AS:

- Weather
- General knowledge
- Public holidays and school holidays
- Smart home
- Messages
- Time, date and time zones
- Pocket and currency calculator
- Football results and fixture lists
- Share prices
- Calendar
- ChitChat
- Horoscope
- Giving feedback

- Vehicle information

The availability of these functions is country and equipment-dependent.

AI-supported functions are available for general knowledge questions and specific search queries, depending on the country and language. This enables you to enter information freely and to conduct the dialogue in a sequential manner. Following a web search, the answers will be assembled both dynamically and contextually.

Depending on the country and language, text content comes from Wikipedia in accordance with the CC BY-SA 3.0 licence or from an artificial intelligence system connected to the Microsoft Bing online search engine.

Essential voice commands

Notes on voice commands

It is not necessary to use exact voice commands to call up a specific function. The MBUX Voice Assistant also understands you when you use your colloquial speech. Some examples are listed below. For some languages however these examples are only available to a limited extent.

EXAMPLES OF VOICE COMMANDS:

- Navigation (⟶ page 550)
- Telephone (⟶ page 550)
- Radio and TV (⟶ page 551)
- Media player (⟶ page 551)
- Vehicle functions (⟶ page 551)
- Online functions (⟶ page 552)

Examples of navigation voice commands

You can operate the navigation system using the MBUX Voice Assistant. The following list offers just a small selection of the possible navigation commands. You can receive additional suggestions in the Hey Mercedes Info App in the multimedia system.

"HEY MERCEDES, ..."

- Drive me home.
- Where is the nearest service station?
- Is there a service area along the route?
- Set Covent Garden as intermediate destination.
- Cancel the route guidance.
- Show my last destination.
- Search for a filling station near the Mercedes-Benz Museum in Stuttgart.
- Navigate me to Warsaw and avoid toll roads.
- How is the traffic on the way to work?

Examples of telephone voice commands

You can operate phones connected with the MBUX multimedia system using the MBUX Voice Assistant. The following list offers just a small selection of the possible telephone commands. You can receive additional suggestions in the Hey Mercedes Info App in the multimedia system.

"HEY MERCEDES, ..."

- Call Peter Miller on the mobile phone.
- Dial 0711 17 0.
- Call my father.
- Write a text message to Jane Smith.
- Search for the contact Peter Miller.
- Tell Peter Miller: "I'll be there five minutes later".
- Read me my new text messages.

- Show me the missed calls.
- Switch to address book

FOR AN INCOMING CALL:

- Reject call
- Accept call

Examples of radio and TV voice commands

Depending on the vehicle equipment, you can operate the radio and TV using the MBUX Voice Assistant. The following list offers just a small selection of the possible radio or TV voice commands. You can receive additional suggestions in the Hey Mercedes Info App in the multimedia system.

"HEY MERCEDES, ..."

- Play the radio station Heart FM.
- Next station.
- Previous station.
- Show me the list of radio stations
- Save the station
- What am I listening to?

Examples of media voice commands

You can operate connected media sources and online music using the MBUX Voice Assistant. The following list offers just a small selection of the possible media voice commands. You can receive additional suggestions in the Hey Mercedes Info App in the multimedia system.

"HEY MERCEDES, ..."

- Play Michael Jackson.
- Play Michael Jackson on Spotify.
- Play "Yellow Submarine' by the Beatles.
- Next track.
- Previous track.
- Repeat this track.
- Please skip five seconds.
- Please go back five seconds.
- Switch on random playback.
- Set the music volume to level six.
- Mute the music.
- Switch to USB.

Examples of vehicle voice commands

You can make settings or operate functions in your vehicle using the MBUX Voice Assistant. The following list offers only a small selection of possible vehicle-specific voice commands and depends on the vehicle equipment and the language set.

ⓘ If no seat is mentioned for commands, the action is carried out automatically for the seat from which the command was spoken or for the function which is closest to that seat.

"HEY MERCEDES, ..."

- Switch the seat heating to level 2.
- Start the Refresh programme.

- Switch the massage programme on.
- I would like to set the ambient light to blue
- Switch on the reading lamp.
- Turn off the rear light.
- Open all the windows.
- Switch the driver display to 3D.
- How fast can I drive here?
- How warm is it outside?

INFORMATION ABOUT THE VEHICLE CAN ALSO BE REQUESTED:

- Information about individual items of the vehicle equipment
  - Hey Mercedes, which massage programmes do you have?
  - Hey Mercedes, do I have Blind Spot Assist?
  - Hey Mercedes, where is the warning triangle?
- Information about functioning of the systems and components installed in the vehicle
  - Hey Mercedes, what is DISTRONIC?
  - Hey Mercedes, what do I need ESP for?
  - Hey Mercedes, what is MBUX?
- Information about operating the systems and components integrated in the vehicle
  - Hey Mercedes, how do I connect my smartphone?
  - Hey Mercedes, how can I turn on the main beam headlamps?
  - Hey Mercedes, how do I stop the ionisation function?

Examples of online functions

Depending on the country, language and vehicle equipment, additional functions are available when online voice control is active. The system accesses external information and can, for example, answer questions about general knowledge, provide information about weather or locations, perform calculations, etc.

"HEY MERCEDES, ..."

- Is the sun shining in Manchester?
- Is it raining at my destination?
- What are the skiing conditions on the Zugspitze?
- What's the time in Sydney now?
- In which country do you pay with dollars?
- How many Swiss franks make 25 euros?
- How long now until the holidays?
- What day is it tomorrow?
- What is 20 % of 29?
- What does my horoscope say?
- What is the price of Mercedes-Benz Group shares?
- Who is the current prime minister?
- What do you know about the Globe Theatre in London?
- Who painted the picture "The Scream"?
- What's the status in the Premier League?
- Create a calendar entry tomorrow at 9 am.
- Tell me a joke.
- How many languages do you speak?
- What is your favourite animal?
- Are there any updates?

- I'd like to give you feedback.

WITH CLOUD-BASED FUNCTIONS ACTIVE, AI-ASSISTED FUNCTIONS ARE AVAILABLE FOR GENERAL KNOWLEDGE QUESTIONS AND CERTAIN SEARCH QUERIES, DEPENDING ON THE COUNTRY AND LANGUAGE. AS PART OF THIS, YOU CAN ALSO REFER TO THE PREVIOUS CONVERSATION, E.G.:

- I would like to take my family out for a special birthday dinner. Can you recommend a nice restaurant nearby?. Subsequent question: We prefer to eat vegetarian.
- What's the biggest fish alive?. Subsequent question: Are they dangerous to humans?
- How many Grammy Awards has Alicia Keys won?. Subsequent question: And when was the last one?

Back to Contents

MBUX multimedia system

This interactive PDF works like a website – tap or click a button to jump straight to where you want to go.
You can return here at any time via the navigation bar at the top left.

Overview and operation
MBUX Interior Assistant
Driver camera
System settings
AMG TRACK PACE
Plug-in hybrid settings
Fit & Healthy
Navigation and traffic
Telephone
In-Car Apps
Online and Internet functions
Media
Radio
Sound
Camera app

Overview and operation

Overview of the MBUX multimedia system

WARNING
Risk of distraction from information systems and communications equipment

If you operate information systems and communication devices integrated in the vehicle when driving, you could be distracted from the traffic situation. This could also cause you to lose control of the vehicle.

- ► Only operate this equipment when the traffic situation permits.
- ► If you cannot be sure of this, stop the vehicle whilst paying attention to road and traffic conditions and operate the equipment with the vehicle stationary.

You must observe the legal requirements for the country in which you are currently driving when operating the multimedia system.

NOTE
Increased surface temperature due to direct sunlight on the central display/front passenger display

The surface of the display is very dark.

If the display is exposed to direct sunlight, the surface may heat up considerably.

- ► If the display has been exposed to direct sunlight, allow it to cool down before touching it for a longer period of time.

THE FUNCTIONS OF YOUR MBUX MULTIMEDIA SYSTEM MAY DIFFER AND DEPEND ON THE FOLLOWING FACTORS:

- Market
- National version
- Technical conditions

Functions and Digital Extras provided by Mercedes-Benz and/or third-party providers may no longer be available when the contractual period expires. This may also be due to technical prerequisites. There is therefore no entitlement to the continuous provision of functions and Digital Extras.
The described functions may be modified, optimized and adapted after the time of going to press.

Mercedes-Benz therefore reserves the right to introduce changes to functions and Digital Extras.
For these reasons, descriptions and depictions relating to the MBUX multimedia system may, in some cases, differ for your vehicle.

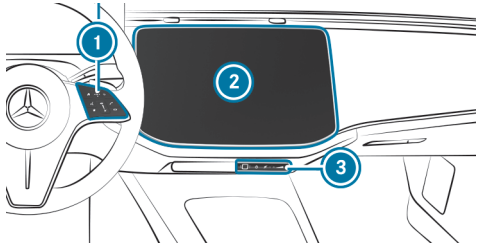

Vehicles with central display

1. Touch Control and control panel for the MBUX multimedia system
   - Operating Touch Control (⟶ page 565)
2. Central display with touch functionality for the driver
   - Overview of the zero layer (⟶ page 559)
   - Calling up and operating the zero layer (⟶ page 561)
   - Home screen overview (⟶ page 563)
   - Operating the touchscreen (⟶ page 566)
3. Control panel for:
   - Fingerprint sensor
   - Switching the MBUX multimedia system on or off, switching the central display on or off
   - Switching sound on or off
   - Adjusting the volume

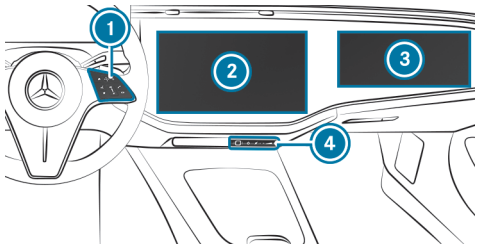

Vehicles with MBUX Superscreen

1. Touch Control and control panel for the MBUX multimedia system
   - Operating Touch Control (⟶ page 565)
2. Central display with touch functionality for the driver
   - Overview of the zero layer (⟶ page 559)
   - Calling up and operating the zero layer (⟶ page 561)
   - Home screen overview (⟶ page 563)
   - Operating the touchscreen (⟶ page 566)
3. Front passenger display with touch functionality
4. Control panel for:
   - Fingerprint sensor
   - Switching the MBUX multimedia system on or off, switching the central and front passenger displays on or off
   - Switching sound on or off
   - Adjusting the volume

ⓘ Various MBUX multimedia system apps offer the option of linking with a QR code. Scan this QR code with your mobile phone before starting the journey.

ⓘ Alternatively, the MBUX Voice Assistant allows voice dialogue. Operation with natural speech starts after the wake-up call "Hey Mercedes" (⟶ page 545). You can start a voice navigation, for example.

ⓘ If the vehicle is equipped with the MBUX Interior Assistant, vehicle and infotainment functions can be used contact-free. The interaction then follows intelligently, reactively or with hand or head movements.

Numerous apps and Digital Extras are available to you. These can be called up via the home screen.

In the zero layer, entertainment sources as well as telephone, active applications and suggestions are directly available to you. You can conveniently call up and add your telephone favourites using the ★ button on the steering wheel.

Quick-access in the home screen and in the applications serve to select functions more quickly.

If you use the learning function of the multimedia system, phone numbers dialled during operation, active relaxation programmes or vehicle functions are suggested to you, for example. Suggestions are displayed on the zero layer based on context and your user behaviour. The configuration of the suggestions is completed in the system settings. Furthermore, the multimedia system learns routines. Routines are actions that run automatically under certain conditions. You can compile your user profile from various vehicle settings and settings of the multimedia system. Some functions and Digital Extras are protected by a PIN. If you teach in biometric procedures, you can identify yourself with these instead of the four-digit Mercedes me ID PIN.

The Notifications Centre collects incoming notifications, e.g. about an available software update. Depending on the type of notification it offers various actions. The call is made via the Control Centre.

OVERVIEW OF THE FRONT PASSENGER DISPLAY (ONLY VEHICLES WITH MBUX SUPERSCREEN)

⚠ **WARNING**
Risk of accident and injury due to distraction when the driver is looking at the front passenger display

If you look at the front passenger display while driving, you may be distracted from the traffic. This could also cause you to lose control of the vehicle. The front passenger display is intended exclusively for the front passenger.

- ► Keep the actual traffic situation constantly in view.
- ► Avoid looking at the front passenger display while driving.

The front passenger display is an additional touchscreen specifically for the front passenger.

REQUIREMENTS FOR DISPLAYING MENU CONTENT ON THE FRONT PASSENGER DISPLAY WHILE DRIVING:

- The front passenger is sitting on the front passenger seat.
- The front passenger display is switched on and is not showing a digital decorative image.
- The driver camera is switched on (⟶ page 586).
  The [camera] symbol is shown in the status line of the central display.
- The driver camera detects the driver's head and line of sight.

The front passenger display shows content from the MBUX multimedia system independently of the central display. Depending on the application, operation is independent of the driver. Depending on the market, extended content, e.g. playback of media content, is also available while driving.

When the vehicle is parked (transmission in position P), the front passenger can use the front passenger display.
If the driver has left the vehicle briefly, e.g. to go shopping, the front passenger display can also be operated.

If no front passenger is present, a digital decorative image is shown on the front passenger display (⟶ page 587). There is also the option of selecting a personal image via the Mercedes-Benz App.

VISUAL SHIELD FUNCTION FOR FRONT PASSENGER DISPLAY
The visual shield function is a function for the driver. This reduces the peripheral perception of the front passenger display.

Certain content on the front passenger display is dimmed for the driver.

REQUIREMENTS FOR ACTIVATING THE VISUAL SHIELD FUNCTION:

- The content shown on the front passenger display is blocked for the driver while driving, e.g. playback of videos.
- The MBUX multimedia system identifies the content to be locked for the driver and locks it automatically.

INTELLIGENT, CAMERA-BASED BLOCKING CONCEPT
The driver camera detects the driver's head and line of sight directed to the front passenger display. If the system detects the driver looking at the front passenger display for too long while driving, the display brightness for the front passenger is reduced for content subject to blocking. These contents are thus no longer visible to the driver and do not distract them during driving. A symbol appears in the top right-hand corner of the front passenger display.

REQUIREMENTS FOR THE FUNCTION:

- The driver camera is switched on.
  The symbol is shown in the status line of the central display.
  If these conditions are not fulfilled, the display brightness is permanently reduced for all content that is subject to blocking.
- The driver camera is functional and not covered.

THE FRONT PASSENGER DISPLAY SHOWS THE CONTENTS AGAIN IN THE USUAL WAY UNDER THE FOLLOWING CONDITIONS:

- The driver looks forward again.
- No blocked content is shown on the front passenger display.

ANTI-THEFT PROTECTION
This device is equipped with technical provisions to protect it against theft. More detailed information about anti-theft protection can be obtained at a qualified specialist workshop.

Zero layer

FUNCTION OF THE ZERO LAYER

Your software can be upgraded to a more current version at a later date.

The zero layer provides you with dynamic content from the MBUX multimedia system and is used to quickly access and control the applications you use.

When you select [⌂] on the central display, the digital map with the applications appears in the lower display area. Compared to the home screen with a classic menu, the steps required to call up the applications are reduced. You can switch between the zero layer and the home screen with a classic menu.

The applications can be hidden from the display area and shown again.

THE ZERO LAYER PROVIDES THE FOLLOWING MODULES AND APPLICATIONS:

- Navigation module

  In the expanded view you can, for example, have the route overview displayed, switch on the display of traffic information and make settings for the View (map), Messages & tones and the Route.
- Entertainment (media, radio) and telephone

  When the lower display area is shown, the entertainment sources are always displayed.

  A mobile phone must be connected to the MBUX multimedia system for the phone to be displayed.
- Active applications

  The lower display area shows an active massage program, for example.
- Suggestions

  Suggestions are displayed on the lower display area based on context and your user behaviour. Here are a few examples:
  - Latest calls
  - Active massage programmes
  - Vehicle functions
  - Online voice applications
  - Personalised routines

  The learning function of the system recognises your typical operating sequences and offers to perform these automatically for you as a routine.

Modules and applications are first shown in a reduced view. By tapping on them, you can operate them or open the associated menu (expanded view).

A long press on a suggestion opens a context menu in which further functions are available.

The learning function can be switched on and off for the options (⟶ page 594).

OVERVIEW OF THE ZERO LAYER

DIGITAL MAP AND USER-SPECIFIC APPLICATIONS (EXAMPLE)

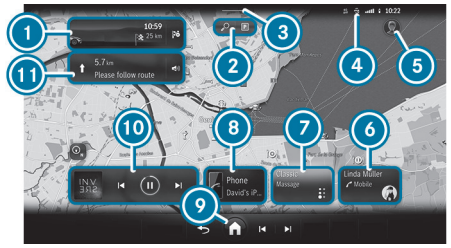

1. Navigation module (reduced view)
2. Enters a destination (⟶ page 49)
   Searches for parking
3. Calls up the Control Centre: pull the bar down
4. Status line
5. Calls up user profile settings
6. Suggestion
   Requirement: suggestions are activated (⟶ page 594).
7. Active application

(8) Telephone
Requirement for phone: the mobile phone is connected to the MBUX multimedia system.
(9) ⌂
Press briefly: shows all applications (⟶ page 561)
Press and hold: calls up the home screen with classic menu (⟶ page 563)
(10) Entertainment sources (media, radio)
(11) Route monitor
e.g. route list, lane recommendations, 3D image of the upcoming driving manoeuvre

The zero layer shows the digital map and the user-specific applications.

THE FOLLOWING USER-SPECIFIC APPLICATIONS ARE DISPLAYED IN THE LOWER DISPLAY AREA:

- Suggestions
  Requirement: suggestions are activated (⟶ page 594).
- Active applications
  e.g. a relaxation programme
  e.g. Active Parking Assist
- Telephone (8)
- Entertainment sources (10)
- Online voice applications

The lower display area can be hidden and shown (⟶ page 561).

INFORMATION ABOUT ENTERTAINMENT SOURCES
You can operate the applications in the reduced view or in the menu (expanded view) (⟶ page 561).

EXAMPLES:

- Control a media source, e.g. pause/play, next track, set a station
- Select tracks from the current playlist or stations from the station list
- Media source selection
  The media source must be connected to the MBUX multimedia system.

INFORMATION ABOUT THE TELEPHONE
To use the functions, the mobile phones must be connected to the MBUX multimedia system.

Requirement for suggestions: the Calls & messages option is activated in the suggestions.

EXAMPLES:

- Answer a call and call a missed call
  The missed calls are displayed for the mobile phones connected to the MBUX multimedia system.
- Display contacts and call list and call a contact
- Use voice functions
- Suggest contacts
  The contacts are suggested for the mobile phones connected to the MBUX multimedia system. No contacts are suggested for the mobile phones that are linked to another user profile.
- Write messages to contacts (suggestion)
- Connect a device via the device manager (suggestion)

INFORMATION ABOUT ACTIVE APPLICATIONS
THE FOLLOWING FUNCTIONS ARE AVAILABLE:

- Operating a massage programme
- Operating an ENERGIZING COMFORT programme

SUGGESTIONS FOR COMFORT AND VEHICLE FUNCTIONS AS WELL AS NAVIGATION

Requirement: the Comfort, Vehicle and Navigation options are activated in the suggestions.

- Operating a massage programme
  For example, the multimedia system suggests a programme at a certain time.
- Opening the boot lid
  Requirement: the vehicle is equipped with boot lid convenience closing.
- Operating an ENERGIZING COMFORT programme
- Making heating settings
- Activating/deactivating Parking Assist PARKTRONIC
- Selecting previous destinations and destinations from favourites

SUGGESTIONS FOR ONLINE VOICE APPLICATIONS

Requirement: the Online voice services option is activated in the suggestions.

The suggested voice applications are made available online and are based on your previous voice inputs.

EXAMPLES:

- What will the weather be like tomorrow?
- Play the messages.
- Start geoquiz.
- Open the garage door.

SUGGESTIONS FOR ACTIVATING RECOGNISED ROUTINES

Requirement: the Learning & suggestions option is activated in the suggestions.

Routines are actions that run automatically under certain conditions. An example of a routine: whenever you drive to work in the morning (condition), the MBUX multimedia system should set a certain massage programme (action). Routines can also perform different actions.

CALLING UP AND OPERATING THE ZERO LAYER

CALLING UP THE ZERO LAYER

When the vehicle has been switched on, the zero layer is displayed with the digital map. Navigation is active.

- **From another application:** press the [⌂] button on the right side of the steering wheel.

or

- Tap on [⌂].

OPERATING APPLICATIONS IN THE REDUCED VIEW (EXAMPLES)

- **Media:** to play the previous or next track, tap [⏮] or [⏭].
- **To answer a call or call a missed call:** tap on the contact.
  After the connection has been established, the call functions are available.
- **To end a call:** tap on the contact again.
- **To reply to a message:** tap on a message and dictate the message via the MBUX Voice Assistant.
- **To start a massage programme:** tap on the application and start the massage programme.
- **To select a previous destination:** tap on the application and select one of the previous destinations.
- **To select a destination from the favourites:** tap on the application and select the destination.

HIDING AND SHOWING THE DISPLAY AREA WITH APPLICATIONS

- **To hide:** pull the applications down.
- **To show:** pull the bar above [⌂] upwards.

or

- Select [⌂].

or

- Press the [⌂] button on the steering wheel on the right.

NAVIGATION MODULE (EXPANDED VIEW)

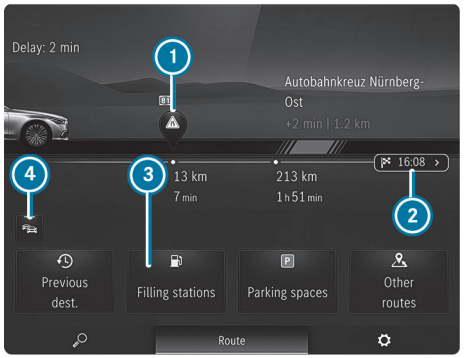

Example: route guidance is active

1. Traffic incident on the route
   Distance from current vehicle position and remaining driving time
2. Destination
3. Searches for a filling station
4. Switches traffic information display on or off

- Tap on the navigation module (⟶ page 559).
- Select Route in the lower menu bar.

OPERATING A MENU IN THE LOWER DISPLAY AREA (EXAMPLE: ACTIVE MASSAGE PROGRAMME)

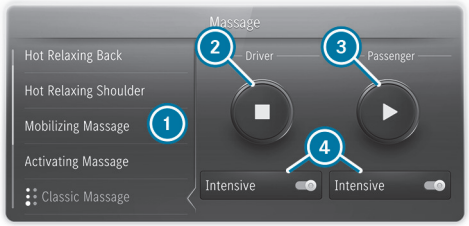

1. Selects a massage programme
2. Starts/stops a programme for the driver
3. Starts/stops a programme for the front passenger
4. Sets the relaxation intensity for the driver's or front passenger seat

- Tap on the application.
  The expanded view of the application is displayed.
- **To close the menu:** select [↩].

OPENING AND CLOSING THE CONTEXT MENU FOR A SUGGESTION

- Press and hold on a suggestion.
  The context menu opens and shows the No longer suggest option, for example.
- **To close:** swipe downwards.

REMOVING A SUGGESTION FROM THE DISPLAY AREA

- Swipe the suggestion upwards.

SHOWING ALL APPLICATIONS

- Briefly press [⌂].
  Available applications are displayed.
- **To hide applications:** briefly press [⌂] again.

SWITCHING BETWEEN THE ZERO LAYER AND HOME SCREEN WITH CLASSIC MENU

- Press and hold on [⌂].
  The home screen with classic menu is shown.
- **To return to the zero layer:** press and hold on [⌂].

Home screen overview

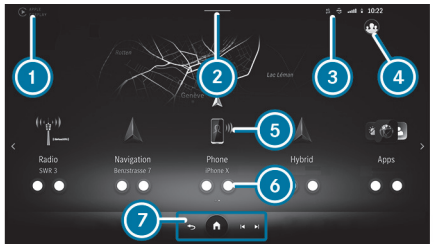

1. Status line
2. Calls up the Control Centre: pull the bar down
3. Displays in the status line
4. Calls up user profile settings and switches user
5. Calls up applications
6. Quick-access to application
7. Global menu
   - [↩] Calls up previous menu
   - [⌂] Press and hold: switches between home screen and zero layer
   - [⏮] Previous track or previous radio station
   - [⏭] Next track or next radio station

ⓘ During a telephone call, the call duration is displayed in global menu 7.

Alternatively, to switch between the home screen and the zero layer, press and hold the [⌂] button on the right-hand side of the steering wheel.

When bar 2 is pulled down, the Control Centre appears.

THE FOLLOWING FUNCTIONS ARE CALLED UP IN THE CONTROL CENTRE:

- Notifications Centre
- Quick vehicle access

Personalised routines

OVERVIEW OF PERSONALISED ROUTINES

The MBUX multimedia system supports you with daily routine tasks and can run them automatically. The system's learning function recognises your typical operating sequences and suggests them as a routine in recurring situations.

When the system recognises a routine, it is proposed to you on the zero layer for activation.

Routines are actions that run automatically under certain conditions. An example of a routine: whenever you drive to work in the morning (condition), the MBUX multimedia system should set a certain massage programme (action). Routines can also perform different actions.

ROUTINES ARE AVAILABLE TO YOU VIA THREE OPTIONS:

- The MBUX multimedia system learns and suggests routines.
- You create your own routines.
- You select predefined routines (templates).

If the learning function Learning & suggestions is switched on and enough data is available, the system suggests a routine on the zero layer. You can activate or reject these. In the future, when the conditions for the routine are met, you will receive a notification with a timer. After confirmation or expiry of the timer, the actions of the routine are executed. If you tap ■ in the notification, the routine is cancelled. No actions are performed. However, the routine is still activated. If the conditions for the routine are met again, you will receive a notification again.

You can create your own routines or select predefined routines via the Routines app.

CONDITIONS FOR ROUTINES ARE, FOR EXAMPLE:

- When should a routine start?
  - Weekdays at 8 a.m.
- Where should a routine start?
  - Start at home, start at work, tunnel passage
- At what temperature should a routine start?
  - From 0 °C
- At which event should a routine start?
  - Incoming or outgoing call
  - Strong sunlight

YOU CAN SELECT THE FOLLOWING ACTIONS, FOR EXAMPLE, FROM CATEGORIES:

- Comfort
  - Selecting a massage programme
  - Setting the seat heating
  - Selecting an ENERGIZING COMFORT programme
- Climate control
  - Setting temperature (front, rear)
  - Activating or deactivating the AC function
  - Adjusting the air vents
- Entertainment and navigation
  - Selecting a radio station
  - Selecting a media source
  - Switching off navigation announcements

ACTIVATING AND STARTING SUGGESTED ROUTINES

ACTIVATING ROUTINES

When a new routine is detected, it is suggested for automation on the zero layer.

► Select Yes.

In the future, when the conditions for the routine are met, a notification will be displayed to prepare you to execute the routine.

or

► **To reject the routine this time:** select Decide later.

You can find the routine in the Routines app and can activate or delete it there at any time.

STARTING A ROUTINE

A notification is displayed with a timer. When the timer has expired, the routine starts automatically.

- **To start the routine immediately:** tap the notification text.
- **To reject routine this time:** tap ■.

  If the conditions for the routine are met, the routine will be offered again in the future.

CREATING YOUR OWN ROUTINES

Multimedia system:

⌂ » Routines » Create routines

CONFIGURING CONDITIONS

- Select +.
- Select the condition, e.g. Weekdays.
- Select further conditions if required.

CONFIGURING ACTIONS

- Select +.
- Select the category, e.g. Comfort.
- Select the action, e.g. Classic Massage.
- If required, select further actions also from other categories.
- Select Next.
- Select a symbol and enter a name, e.g. My first routine.
- Select Add routine.

  The routine appears in the overview. When the conditions for the routine are met, a notification is displayed. The routine can be started.

ⓘ You can edit a created routine at any time.

SELECTING PREDEFINED ROUTINES

Multimedia system:

⌂ » Routines » Templates

- Activate the desired routine.

  When the conditions for the routine are met, a notification is displayed. The routine can be started.

ⓘ Templates can be edited like your own routines.

Touch Control

OPERATING TOUCH CONTROL (MBUX MULTIMEDIA SYSTEM)

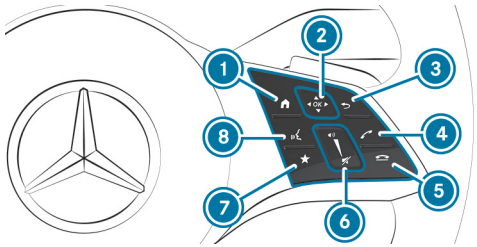

1. ⌂ Shows zero layer/home screen
2. Touch Control
   - ◀ ▲ ▶ ▼ swipe in the direction of the arrow (navigate)
   - OK Press (confirm)
3. ↩ Returns to the previous display
4. ✆ Makes or accepts a call

5 Rejects or ends a call
6 To increase volume: swipe upwards
To reduce volume: swipe down
Switches off the sound: press
7 Calls up telephone favourites
8 Starts the MBUX Voice Assistant

ⓘ To operate Touch Control 2 in the most effective way, use the tip of your thumb if possible.

You can navigate through menus and lists via the touch-sensitive surface of Touch Control 2 using **a single-finger swipe**, e.g.:

- **To enter a character:** select a character using the keyboard and press on Touch Control 2.
- **To select a menu option:** scroll in a list and press Touch Control 2.
- **To move the digital map:** swipe in any direction.

SETTING THE SENSITIVITY FOR TOUCH CONTROL

Multimedia system:

Settings System Control elements Touch Control sensitivity

- Select Fast, Medium or Slow.

SETTING ACOUSTIC OPERATIONAL FEEDBACK FOR ALL CONTROL ELEMENTS

Multimedia system:

Settings System Control elements Acoustic feedback

The function is supported by the selection in a list.

- Set Off, Unleaded or Loud.

If the function is activated you will hear a clicking sound when selecting control elements or when scrolling in a list. When the beginning or end of the list is reached you will hear another clicking sound.

Touchscreen

OPERATING THE TOUCHSCREEN

TAPPING

- **To select a menu item or entry:** tap on a symbol or an entry.
- **To increase the map scale:** tap twice quickly with one finger.
- **To reduce the map scale:** tap with two fingers.
- **To enter characters with the keypad:** tap on a button.

SINGLE-FINGER SWIPE

- **To navigate in menus:** swipe up, down, left or right.
- **To move the digital map:** swipe in any direction.

TWO-FINGER SWIPE

- **To zoom in and out of the map:** move two fingers together or apart.
- **To enlarge or reduce the size of a section of a website:** move two fingers together or apart.
- **To turn the map:** turn anti-clockwise or clockwise using two fingers.

THREE-FINGER SWIPE

- **To call up the home screen:** swipe up with three fingers in an application.

TOUCHING, HOLDING AND MOVING

- **To move the map:** touch the touchscreen and move your finger in any direction.
- **To set the volume on a scale:** touch the touchscreen and move the finger to the left or right.

TOUCHING AND HOLDING

- **To save the destination in the map:** touch the touchscreen and hold until a message is shown.
- **To call up a global menu in the applications:** touch the touchscreen and hold until the Options menu appears.

Overview of the fingerprint sensor

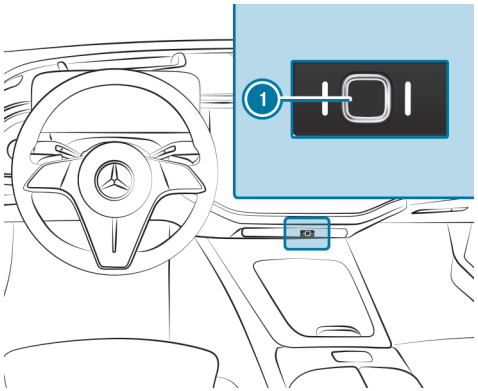

Fingerprint sensor (1) allows you to conveniently access protected MBUX multimedia system functions and services. Compared to protection provided by the Mercedes me ID PIN, the entry of a four-digit number is not required to activate services and functions with personal content.

The fingerprint sensor must be set up before use (⟶ page 570).

If equipped with a front passenger display, one fingerprint can be scanned in for the driver's seat and one for the front passenger seat. These fingerprints are then assigned to the respective seat. They can be used for authentication or to activate your own user profile on the assigned display.

ⓘ The fingerprint sensor stores only a data model and no image of the fingerprint. The data model is only processed in the vehicle and is not transmitted from the vehicle.

User profiles

NOTES ON USER PROFILES

WARNING
Risk of becoming trapped during adjustment of the driver's seat after calling up a driver profile

Selecting a user profile may trigger an adjustment of the driver's seat to the position saved under the user profile. You or other vehicle occupants could be injured in the process.

► Make sure that when the position of driver's seat is being adjusted using the multimedia system, no people or body parts are in the seat's range of movement.

If there is a risk of someone becoming trapped, immediately stop the adjustment process by:

► a) Tapping the warning message on the central display.

or

► b) Pressing a position button of the memory function or a seat adjustment switch in the driver's door.

The adjustment process is stopped.

The electrically adjustable driver's seat is equipped with an automatic reversing function.

If the driver's door is open, the driver's seat will **not** be set after calling up the driver's profile.

OVERVIEW OF USER PROFILES

REQUIREMENTS FOR USE

- You have registered with a Mercedes me ID and confirmed the terms of use.
- Your Mercedes me ID is linked to the vehicle.

ⓘ If one of the pre-requisites listed is missing or if no user profile has been selected, the data described in the following section will be saved in the vehicle as the standard setting. Standard settings can be changed by all vehicle users.

User profiles save personal settings. If the vehicle is used by several people, a person can change their profile settings without changing the settings of other users.

ⓘ Some settings apply to the entire vehicle and are displayed in all user profiles, e.g. ambient lighting and the current navigation settings. These are assigned to the driver's profile, but can also be changed by the other vehicle occupants in their user profile.

You can individualise a user profile in the vehicle using the set-up assistant or using the settings in your user profile. Some settings, e.g. a profile photo, can be made either in the Mercedes-Benz App or in the Mercedes-Benz Portal.

ⓘ If the user profile is downloaded while travelling, user profiles are not set up using the set-up assistant.

User-specific content and applications with personal data are protected by different levels of security (⟶ page 570).

To access protected content, the Mercedes me ID PIN and, depending on the vehicle equipment, biometric sensors are used.

WHEN A USER PROFILE IS ACTIVATED, THE FOLLOWING PERSONALISED COMFORT SYSTEMS, FOR EXAMPLE, CAN BE ADJUSTED OR THEIR SETTINGS LOADED:

- Seat
- Ambient light
- Outside mirrors
- Roller blinds
- Air conditioning settings
- Head-up display

If the user profile is activated when driving then the driver's seat position will not be adjusted.

USER-SPECIFIC CONTENT

DEPENDING ON THE VEHICLE EQUIPMENT YOU CAN, AS A USER, SAVE THE FOLLOWING SETTINGS, FOR EXAMPLE:

- Driver's seat, steering wheel and mirror settings
- Climate control
- Ambient light
- Radio (including station list)
- Suggestions

This function is an on-demand feature (→ page 114): if the vehicle key is linked to the user profile, the user profile is pre-activated when unlocking the vehicle or approaching a vehicle with KEYLESS-GO. Light, mirror and seat adjustments are made during this process. To use a user profile or an application, the vehicle key also serves as a sensor input for authorisation.

You can watch an animation on this topic via the following link:

ADDING A USER

Requirements:

- The vehicle is stationary.

Multimedia system:

→ Select user

▶ Select ⊕ Add user.

A QR code is loaded.

▶ Scan the displayed QR code with the Mercedes-Benz App or any QR code scanner on a mobile device. If the Mercedes-Benz App is not yet installed on your mobile device, you will be redirected to the store on your mobile device.

▶ Follow the steps in the Mercedes-Benz App.

The vehicle is linked to your Mercedes me ID. This automatically creates your user profile in the vehicle.

If only your user profile is available, it will be loaded automatically.

If more than one user profile is available, you will be directed to the user selection.

When the vehicle is stationary, the set-up assistant starts automatically after user selection.

When the user has been added, they can be selected (→ page 572).

SELECTING USER OPTIONS

Requirements:

- A user is selected.

Multimedia system:

 Settings

PROTECTING USER-SPECIFIC CONTENT AND APPLICATIONS

If you add a new user, access protection is already activated for the user profile. The Mercedes me ID PIN and, depending on the vehicle equipment, biometric sensors are available for access. Biometric sensors in the vehicle must be taught in. The authentication process then takes all taught-in and available sensors into account.

THE FOLLOWING USER-SPECIFIC CONTENT AND APPLICATIONS ARE PROTECTED, FOR EXAMPLE:

- User selection and user profile settings
- Biometric sensors

  The teaching-in of biometric sensors

  For teaching in and editing biometric recognition see the following section.
- Suggestions

  The data and determination of the most probable navigation destinations, media sources, radio stations, contacts and messages.
- ENERGIZING COACH

  The recorded health data and its evaluation.
- In-Car Calendar

  The calendar.
- Parking service

  The payment transactions.
- Mercedes-Benz Store

  The purchase of Digital Extras
- System activations of paid vehicle functions

IN THE FOLLOWING CASES YOU WILL BE PROMPTED FOR AUTHENTICATION OR RE-AUTHENTICATION USING A SENSOR OR THE MERCEDES ME ID PIN:

- When selecting a protected user profile
- When calling up a function requiring special protection
- If the seat belt buckle and the door are opened at the same seat and a function requiring special protection is called up

ⓘ Facial recognition for re-authentication in the driver's seat is only possible once the door has been closed or the seat belt buckle has been fastened again.

► Select Protect content.

► Switch Access protection on or off.

ⓘ When access protection is switched off, your user profile can be viewed from any seat and changes can be made.

ⓘ Access protection is switched on or off on a vehicle-specific basis.

ⓘ Please note that authentication is necessary for several functions such as In-Car Calendar and cannot therefore be completely switched off.

SETTING UP AND EDITING BIOMETRIC RECOGNITION

The biometric data models are saved in the sensors in the vehicle. If recognition has been set up, this sensor serves as a contributory factor for authentication on the multimedia system.

- ► Select Protect content.
- ► Select Facial recognition or Fingerprint recognition.

ⓘ If necessary, authenticate yourself on the multimedia system.

SETTING UP FACIAL RECOGNITION

- ► Close the driver's door or fasten the driver's seat belt.
- ► Follow the system's instructions.

  Your face is scanned. A message in the driver display or central display shows whether facial recognition was successful or not. You can unlock your user profile and protected applications with the facial scan.

SETTING UP FINGERPRINT RECOGNITION

- ► Place and lift your finger several times on the fingerprint sensor under the touchscreen (⟶ page 567).
- ► Follow the system's instructions.

  The finger is scanned. If the scanning procedure is successful, a message appears on the central display. You can unlock your user profile and protected applications with your fingerprint.

DELETING BIOMETRIC DATA

- ► Tap on 🗑 behind Facial recognition or Fingerprint recognition.
- ► Select Yes.

CALLING UP THE SET-UP ASSISTANT

- ► Select Profile.
- ► Select Set-up assistant.
- ► Follow the directions from the set-up assistant.

TEACHING IN THE KEY FOR PROFILE SELECTION

- ► Select Protect content.
- ► Select Key recognition.
- ► Have the key ready and follow the set-up assistant's prompts.

  The user profile is linked to the selected key.

IF YOU OPEN THE VEHICLE WITH THE KEY, THE LIGHT, MIRROR AND SEAT SETTINGS FOR YOUR USER PROFILE ARE PRE-ACTIVATED:

- Vehicles with KEYLESS-GO: on approach
- Vehicles without KEYLESS-GO: when unlocking the doors

The key you are currently using for unlocking is used.

The personalised settings of your user profile are loaded.

ⓘ The seat moves to the corresponding position before the driver's door is opened (⟶ page 252).

ⓘ The key is only stored for the driver and for one user profile.

CHANGING A USER NAME OR PROFILE PHOTO

- ► Select Profile.
- ► Select Change user name.

or

- ► Select Profile picture.
- ► Enter the user name or select a user image.
- ► Select Finished.

ⓘ You can store your photo in your Mercedes me ID in the app or in the portal. The photo will then be shown in the vehicle. In the vehicle itself, you can select other sample images instead of the photo.

DELETING A USER PROFILE

- ► Select Profile.
- ► Select Remove.
- ► Select Remove user profile.

ⓘ Your Mercedes me ID and your personal data are retained in the Mercedes-Benz ecosystem.

RESETTING THE USER PROFILE TO FACTORY SETTINGS

- ► Select Profile.
- ► Select Reset.
- ► Select Yes.

ⓘ In doing so, both the Mercedes me ID PIN and the biometric data in the vehicle and on the sensors will be deleted.

ⓘ You are only resetting the user profile to the factory settings; none of the other system settings in the vehicle are changed.

You can watch an animation on this topic via the following link:

SELECTING A USER

Multimedia system:



ⓘ When you call up your driver profile, the driver's seat and the steering wheel can be set.

YOU CAN CANCEL THE SETTING PROCESS WITH THE FOLLOWING ACTIONS:

- Press Tap here to cancel. message on the central display.
- Press one of the seat operating buttons in the driver's door.

- ► Select Select user.
- ► Select a user.

► When requested to do so, authenticate with the Mercedes me ID PIN or a taught-in biometric characteristic.
The user profile is loaded and activated.

ⓘ If you select Continue without selecting user, no specific settings for the user profile are loaded.

SYNCHRONISING USER PROFILES

Requirements:

- You have registered with a Mercedes me ID and confirmed the terms of use.
- Your Mercedes me ID is linked to the vehicle.
- A user is selected.

Multimedia system:

Settings Profile synchronisation

► Activate Synchronise automatically.
When the vehicle is switched on or off, the data stored in the vehicle is automatically synchronised with the Mercedes me IDs. This synchronisation is done for all user profiles and is not profile-specific.

or

► Select Synchronise now.
After selecting this option, the data stored in the vehicle is synchronised with the Mercedes me IDs.

ⓘ Not all user profile functions are available during synchronisation.

ⓘ **IF THE PERSONALISATION SERVICE IN THE VEHICLE IS DEACTIVATED, ONLY THE FOLLOWING USER PROFILE MASTER DATA IS SYNCHRONISED:**

- Profile name
- Profile image
- Mercedes me ID PIN

Notifications Centre

OVERVIEW OF THE NOTIFICATIONS CENTRE

THE FOLLOWING COMMUNICATIONS ARE COLLECTED IN THE NOTIFICATIONS CENTRE:

- Communications which are generated by the vehicle or from the multimedia system.
- Communications which are received through the use of services.

THE FOLLOWING NOTIFICATION TYPES ARE AVAILABLE FOR YOU:

- Navigable destinations and routes
- Messages (text messages)
- Calendar entries and reminders, e.g. from the In-Car Calendar
  This function is not available in all countries.
- System information, e.g. Important software update available. Confirm to start the update.

- Other notifications, e.g. from additional online services that can be subscribed to or emergency reports (e.g. tornado)

The Notifications Centre is in the Control Centre.

Depending on the style set, newly received notifications are shown using a coloured dot.

Notifications are normally briefly shown as they are received. If you take no action, these are stored for future access in the Notifications Centre.

The notifications are sorted chronologically. The most recent notifications are at the top.



Example of a message

1. Calls up the Notifications Centre
2. Symbol for a pinned notification
3. Time message received
4. Calls up the settings
5. Notification
6. Description of the notification and the issuing service
7. Symbol for notifications
8. Date of the notification received

Depending on the type of notification, up to four different actions are available. If available these are shown as symbols.

EXAMPLES OF ACTIONS INCLUDE:

- Reading aloud
- Placing a call
- Replying
- Calling up a website
- Navigation

Some notifications, e.g. a navigation destination, are stored longer. Therefore, it is not necessary to carry out available actions directly upon receipt of the notifications. A route guidance can be started at a later time.

You can pin a notification so that this is not deleted automatically after a certain time. The notification is then denoted by symbol 2.

CALLING UP NOTIFICATIONS

OPENING THE NOTIFICATIONS CENTRE

► In the zero layer pull down bar 3 in the centre of the status line (→ page 559).

or

► In the home screen pull down bar 4 in the centre of the status line (→ page 563).

The Control Centre opens.

► Select [ ] in the Control Center.

SELECTING A NOTIFICATION

- ► If several messages are available swipe up or down.
- ► Select an action.

CLOSING THE NOTIFICATIONS CENTRE

- ► Select [↩].

SELECTING ACTIONS FOR A NOTIFICATION

THE FOLLOWING OPTIONS ARE AVAILABLE:

- Select the action directly after a notification is received and shown.
- Select the action later after calling up in the Notifications Centre.

- ► Up to two actions available: select the action.
- ► More than two actions available: select [<].
- ► Select the action.
  The notification is still available.
- ► Close the actions with [>].

EDITING NOTIFICATIONS

- ► Call up the Notifications Centre (⟶ page 574).

CONFIGURING SETTINGS

- ► Select [⚙] Settings .
- ► Select the service.
- ► Switch the options on or off.

  THE FOLLOWING OPTIONS ARE AVAILABLE DEPENDING ON THE SERVICE:

  - Allow notifications
  - Display in notification centre
  - Show notifications
  - Switching Acoustic signals on or off
  - External access

    The option allows an external service access to specific data, e.g. the current vehicle position. The detailed, approved information is shown with ⓘ.

  If Allow notifications is switched off, the options cannot be selected with the exception of External access.

PINNING A NOTIFICATION

- ► Drag a notification to the right on the touchscreen.
  A pin appears.
- ► Tap on the pin.
  The notification is marked with a pin.

DELETING NOTIFICATIONS

- ► Drag a notification to the left on the touchscreen.

or

- ► Select [🗑].
- ► Select Yes.
  All messages are deleted.

Switching the sound for the MBUX multimedia system on or off

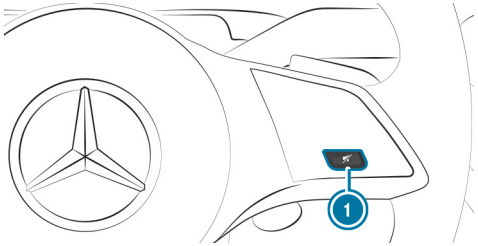

On the steering wheel

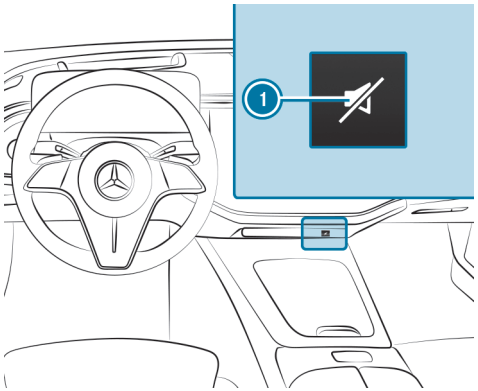

On the control panel when equipped with MBUX Superscreen

- **To switch off:** press button (1).

  The current audio source is muted.

  The [ ] symbol appears in the status line of the central display.

  If you are listening to a radio station, for example, and switch off the sound then all media sources will be muted.

  Traffic and navigation announcements can still be heard in this case. The MBUX Voice Assistant and telephony are also not affected.

SWITCHING ON

- Press button (1) again.

or

- Set the volume.

or

- The media source changes.

Setting the volume of the MBUX multimedia system

SETTING ON THE STEERING WHEEL

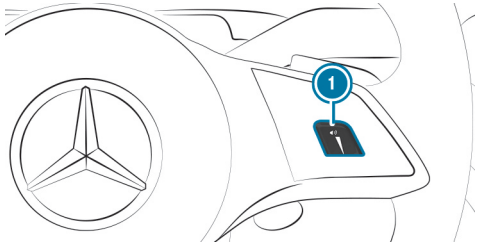

- Swipe across button (1).

  The volume of the current audio source in the foreground is set.

SETTING ON THE CONTROL PANEL IN THE CENTRE CONSOLE

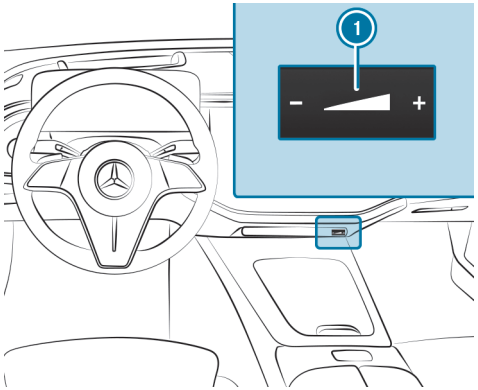

Equipped with MBUX Superscreen

- Press – or + 1.

  The volume of the current audio source in the foreground is set.

USING THE CONTROL, THE VOLUME IS ADJUSTED FOR THE FOLLOWING GROUPS:

- Entertainment
- Ringtone
- Calls, for example phone calls
- Voice output, for example MBUX Voice Assistant
- Navigation announcements

If you set the volume of the voice output to "0", for example, a minimum volume is automatically set when the MBUX Voice Assistant is next called up. The entertainment volume is automatically adjusted after the multimedia system is restarted.

SETTING IN THE MENU

- Press and hold the ⌂ button on the right of the steering wheel.

or

- Press and hold ⌂ on the touchscreen.

  The home screen appears.
- Select Settings.
- Select System.
- Select Audio.
- Select a volume setting.

The volume can be set for all groups except the entertainment volume.

- Set the volume.

THE FOLLOWING SETTINGS ARE ALSO AVAILABLE IN THE ASSISTANCE MENU:

- Switching the navigation announcements on or off during a phone call.
- Reducing the entertainment volume while a navigation announcement is being issued.

Entering characters

USING THE CHARACTER INPUT FUNCTION

You can enter characters using Touch Control or the touchscreen. Character input can be started with a control element and resumed with another.

- When the keypad is shown, enter the characters by swiping and pressing on the Touch Control or by tapping on the touchscreen.

Examples for character entry include the entry of a navigation destination or a message.

ENTERING CHARACTERS ON THE TOUCHSCREEN

Requirements:

- An online connection is required for some functions.

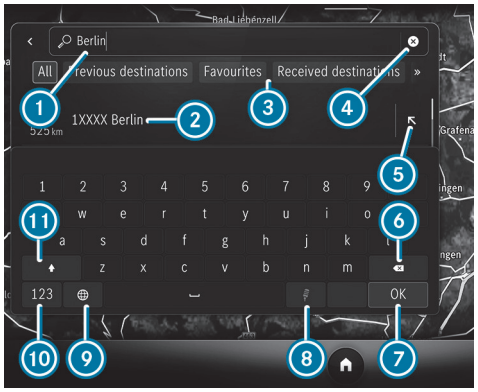

Example: character input with the keypad

1. Input line with current entry
2. Search result
3. Selects destination input, displays further destination inputs with double arrow
4. Deletes an entry
5. Adopts the search result in the input line and continues the search
6. Deletes the last character entered
7. Hides the keypad
8. Starts the MBUX Voice Assistant (→ page 545)
9. Sets the written language
10. Switches to digits and special characters
11. Switches to upper-case or lower-case letters

- Example: call up the navigation and enter a destination address (→ page 49).
- Briefly press on a character.
  The character is entered in input line 1.
- Resume character input.

ⓘ The available editing functions depend on the editing task, the language set and the character level.

ENTERING ALTERNATIVE CHARACTERS

- Press and hold on a character.
- Select the character.

ENDING CHARACTER INPUT

- Tap on 7 and hide the keyboard.

SETTING THE KEYBOARD FOR CHARACTER ENTRY

Requirements:

- The read-aloud function is available for the selected system language.

Multimedia system:

Settings » System » Keyboard

SETTING THE KEYBOARD LANGUAGE

- Select Keyboard languages.

- Select one or more keyboard languages.

DELETING THE USER DICTIONARY

The user dictionary learns from your inputs and offers suggestions during character input. You can reset the user dictionary.

- Select Reset my dictionary.
- Select Yes.

MBUX Interior Assistant

Notes on lasers and laser classification

WARNING
Risk of injury from the camera's laser radiation

This product uses a classification 1 laser system. If the housing is opened or damaged, laser radiation may damage your retina.

- Do not open the housing.
- Always have maintenance work and repairs carried out by a qualified specialist workshop.

This device is a class 1 laser product in accordance with IEC 60825-1:2014 and DIN EN 60825-1:2014.

The camera records image data for the applications, for example body, head and hand detection.
The camera converts the image data directly into meta data. No image data is saved in the process. The data is processed in the vehicle and is not transmitted from the vehicle.
When you start the vehicle, the MBUX Interior Assistant is activated automatically. You can switch the Interior Assistant on or off (⟶ page 584).

Overview of the MBUX Interior Assistant

The MBUX Interior Assistant detects the front vehicle occupants via 3D laser cameras in the overhead control panel. The Assistant interprets natural hand, head and body movements contextually or upon explicit request from the driver or front passenger. The Assistant can thus automatically trigger vehicle interior functions and assist appropriately to the situation.

The Assistant recognises driver and front passenger interactions.

THE APPLICATIONS ARE AVAILABLE UNDER THE FOLLOWING CONDITIONS:

- The MBUX Interior Assistant is activated (⟶ page 584).
- The MBUX multimedia system is activated.

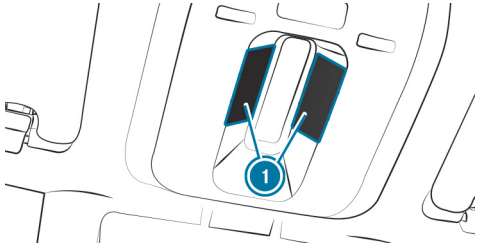

Cameras (1) are located in the overhead control panel.

THE ASSISTANT SUPPORTS VEHICLE AND INFOTAINMENT FUNCTIONS AT THREE INTERACTION LEVELS:

- INTELLIGENT
  The Assistant recognises vehicle occupants and objects automatically and activates functions.
- REACTIVE
  The Assistant recognises the natural body language of a vehicle occupant and carries out functions automatically, appropriate to the situation.
- CONTACTLESS
  The vehicle occupant actively requests a function using a hand movement.

THE ASSISTANT OFFERS FUNCTIONS FOR THE FOLLOWING:

- SAFETY
  The Assistant supports vehicle occupants with the use of restraint systems.
- COMFORT
  The Assistant enhances comfort by automating functions inside the vehicle and supporting natural interaction with the vehicle.
- INFOTAINMENT
  The Assistant facilitates operation of the Infotainment functions.

SYSTEM LIMITS, DISPLAY MESSAGES AND NOTES FOR RECTIFICATION

ⓘ System limits that only apply to one application are described in the corresponding section.

The fault messages are shown on the central display, for example.

THE SYSTEM MAY BE IMPAIRED OR INOPERATIVE IN THE FOLLOWING SITUATIONS:

- The camera in the overhead control panel may heat up due to operating conditions. As a result the camera may switch off temporarily, particularly during longer periods of operation and at high outside temperatures.
  Do not touch or cover the camera. Wait until the camera has cooled down and is available again.
  The Interior assistant unavailable. Notification to follow. message appears.
  You receive a message when the camera is available again.
- The camera is covered, dirty, misted up or scratched.
  Wait until the camera has cooled down before cleaning the camera cover.
  The Currently unavailable, see Owner's Manual. message appears.
  Clean the outside of the camera cover with a dry or damp cotton cloth. Do not use microfibre cloths. Do **not** remove the cover when cleaning.
- A vehicle occupant is very large. Clothing being worn (gloves, hat, scarf, colour of clothing) or objects carried on a person, for example a watch with a large display, can affect the camera view. Or the detection range of the camera is restricted.
  No message appears.
  Keep the camera's field of vision clear.
  Objects in the detection range of the camera can restrict the camera view. Please make sure that no objects hang on the inside mirror, for example.
- The MBUX Interior Assistant is faulty.
  The Interior assistant is unavailable. Please contact a Mercedes-Benz workshop. message appears.
  Consult a Mercedes-Benz service centre.

THE THREE TYPES OF INTERACTION:

Type of interaction	Description and example of application
INTELLIGENT	The Assistant detects the presence of vehicle occupants and objects. Depending on the situation, functions are carried out automatically. Example of application: prompt about fastening the child seat (safety)
REACTIVE	The natural body language of a vehicle occupant, e.g. a hand or head movement, is recognised and triggers a function implicitly. Example of application: switching the search light on or off (comfort)
CONTACTLESS	The vehicle occupant triggers a function by actively demanding this with a hand movement.

You can watch an animation on this topic via the following link:

Note on securing the child seat with the belt (SAFETY/intelligent)

The MBUX Interior Assistant detects child restraint systems on the front passenger seat. If a child restraint system is not fastened, e.g. a rearward-facing child seat, a message appears on the central display.

The function assists you in making sure that a child restraint system is secured with the seat belt on the front passenger seat.

ⓘ For further information on securing a child restraint system with the seat belt on the front passenger seat (⟶ page 185).

ⓘ The MBUX Interior Assistant cannot check whether the child is correctly restrained in the child restraint system.

ⓘ This equipment is not available in conjunction with all seat variants.

Switching the reading light on or off (COMFORT/contactless)

Requirements:

- The driver's and front passenger's hand movement takes place under the inside rearview mirror.

A brief movement of the hand up and down, switches the reading light on or off.



Carrying out operation of the reading light for the driver and front passenger

- Move your hand up and down under the inside rearview mirror.
  The reading light is switched on or off.

ⓘ Further information on switching the reading lamps on and off (⟶ page 291).

Switching the search light on or off (COMFORT/reactive)

REQUIREMENTS:

- The function is available in the vehicle when it is dark.
- The front passenger seat is not occupied or a child is sitting in a child restraint system.
- The hand movement is made by the driver in the interaction area above the front passenger seat.

The function enhances the comfort in the vehicle interior.

Stretching out a hand over the front passenger seat switches a search light on automatically for the driver when it is dark. Pulling the hand back switches the search light off again.

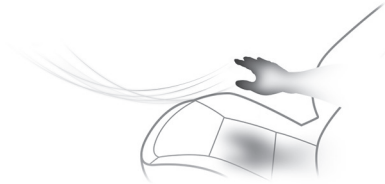

Interaction area for activation of the search light

Automatic preselection of the outside mirrors (COMFORT/reactive)

Until now, to set the outside mirrors the desired mirror had to be selected using a preselection button in the driver's door.

With the MBUX Interior Assistant, the mirror to be set is preselected automatically by the natural movement of your head to the left or right. When the hand touches the button for adjusting the outside mirror, the LED under the button of the preselected mirror side lights up.

Use the button to set the position of the active outside mirror.

ⓘ Preselection of the outside mirrors using buttons is still possible. Further information on adjusting the outside mirrors (⟶ page 296).

ⓘ The driver camera is also used for this application.
Further information on the driver camera (⟶ page 585).

This function is not supported if the MBUX Interior Assistant is not available.

Opening or closing the roller sunblind on the rear window (COMFORT/reactive)

REQUIREMENTS:

- The vehicle is equipped with a roller sunblind for the rear window.
- Reverse gear is engaged.

If the driver glances back over their shoulder in the direction of the rear window, the roller sunblind opens automatically.

IF THE ROLLER SUNBLIND WAS CLOSED BEFORE REVERSING, IT WILL BE CLOSED AUTOMATICALLY IN THE FOLLOWING SITUATIONS:

- Park position P is selected.
- The vehicle exceeds a minimum speed when moving forward.

The function facilitates a good view when reversing, e.g. when parking, and reduces the number of operating steps.

Further information on opening and closing the roller sunblind on the rear window (→ page 228).

This function is not supported if the MBUX Interior Assistant is not available.

Selecting settings for the MBUX Interior Assistant

Multimedia system:

Settings » System » Intelligent assistants

SWITCHING THE MBUX INTERIOR ASSISTANT ON OR OFF

- Activate or deactivate the Assistant.

  If the Assistant is activated, full functionality is used.

Driver camera

Overview of the driver camera

WARNING
Risk of injury from infrared radiation from the camera

This product uses an infrared lighting system of risk group 0 (RG0). If the housing is opened or damaged, infrared radiation may damage your retina.

- ► Do not open the housing.
- ► Always have maintenance work and repairs carried out by a qualified specialist workshop.

This device is a product of risk group 0 (RG0) according to IEC 62471: 2006 (First Edition) & DIN EN 62471: 2008.
Depending on the equipment, the driver camera is located either in the driver display or in the nozzle strip.

Depending on the equipment, the driver camera is either a mono or a stereo camera.

THE DRIVER CAMERA DETECTS THE FOLLOWING CHARACTERISTICS:

- Head position
- Viewing direction
- Eyelid closure characteristics
- Driver's face

ⓘ The driver camera is automatically activated each time the vehicle is opened with the key.
The current status of the driver camera is shown in the status line of the central display.

ⓘ The driver camera records image data for applications such as ATTENTION ASSIST and facial recognition, for example.
The driver camera converts the image data directly into meta data. No image data is saved in the process. The data is only processed in the vehicle and is not transmitted from the vehicle.

The driver camera must be set up for facial recognition before use (⟶ page 570).

SYSTEM LIMITS

THE SYSTEM MAY BE IMPAIRED OR MAY NOT FUNCTION IN THE FOLLOWING SITUATIONS:

- The driver camera is covered or dirty, misted up or scratched.
- The driver's face and/or eyes are covered.
- The driver is wearing glasses that block infrared.

DISPLAY MESSAGES

IN THE FOLLOWING SITUATIONS DISPLAY MESSAGES MAY BE SHOWN:

- If the driver camera is not functioning.

The driver camera is malfunctioning.

The Driver camera inoperative See Owner's Manual message appears.

- If the driver camera's view of the driver is blocked due to the current steering wheel and seat position.

  The Change steering wheel/ seat position until 6 dots are visible on the upper edge of the screen message appears.

- If the view of the driver camera is reduced or restricted.

  The The camera's view of the driver is currently impeded Affected functions: see Owner's Manual message appears.

  The message can appear, for example, in the following cases:

  - The camera's view is obstructed, e.g. due to a scarf or hat being worn.
  - The driver is wearing glasses that block infrared.
  - If hair partially obstructs the eyes, e.g. as with a long fringe.
  - In the event of strong direct sunlight. The driver camera cannot detect the driver's eyes if the light-dark contrast is too strong.
  - When one hand or both hands are on top of the steering wheel (twelve o'clock position).

NOTES ON CARE

For the display, please comply with the notes on caring for the interior (⟶ page 733).

Switching the driver camera on or off

Multimedia system:

Settings » System » Intelligent assistants

The driver camera is automatically activated each time the vehicle is switched on.

► Select On or Off.

WHEN THE DRIVER CAMERA IS SWITCHED OFF OR THE THE CAMERA'S VIEW OF THE DRIVER IS CURRENTLY IMPEDED AFFECTED FUNCTIONS: SEE OWNER'S MANUAL **MESSAGE APPEARS, THE FOLLOWING FUNCTIONS ARE NOT AVAILABLE OR LIMITED:**

- The 3D driver display (only with stereo camera) (⟶ page 517)
- The microsleep and distraction detection function of ATTENTION ASSIST (⟶ page 422)
- The facial recognition

  This function serves as sensor input for authentication and unlocking of the user profile and protected applications (⟶ page 570).
- The mirror preselection

  This function allows the natural movement of the head to the left or right to automatically preselect the outside mirror to be adjusted (⟶ page 296).

System settings

Display

CONFIGURING DISPLAY SETTINGS
Multimedia system:
Settings >> System >> Display

ADJUSTING THE BRIGHTNESS

- Select Display brightness.
- Vehicles with a driver display and central display: adjust the display brightness of the driver display or central display.
- Vehicles with the MBUX Superscreen: adjust the display brightness of the driver display, central display or the front passenger display.

SETTING THE DECORATIVE IMAGE FOR THE FRONT PASSENGER DISPLAY (VEHICLES WITH MBUX SUPERSCREEN)

ⓘ The function is country-dependent.

- Select Passenger screen decorative image.
  A selection of decorative images is displayed.
- Select the desired decorative image.

ⓘ The number of available decorative images is variable.

ⓘ If no user is logged in to the front passenger display and the front passenger display is switched on, the digital decorative image is visible.

Time and date

SETTING THE TIME ZONE
Multimedia system:
Settings >> System >> Time and date

- Select Time zone.
  The list of countries is displayed.

ⓘ If there are several time zones available in a country, these will be shown after the country is selected.

- Select a country and, if required, a time zone.
  The time zone set is displayed after Time zone.

or

- Select the Automatic time zone entry from the country list.
  The time zone will be set automatically according to the vehicle location.

The Automatic time zone option is available for vehicles with satellite reception.

SETTING THE TIME AND DATE FORMAT

Multimedia system:

Settings >> System >> Time and date >> Set format

- Select a time and date format.

SETTING THE TIME AND DATE MANUALLY

Requirements:

- The vehicle does not have satellite reception.

Multimedia system:

Settings >> System >> Time and date

SETTING THE TIME

- Select Set time.
- Set a time.
- Press OK to confirm.

SETTING THE DATE

- Select Set date.
- Select a date.
- Press OK to confirm.

On vehicles with satellite reception, the time and date settings are determined automatically based on the vehicle location and cannot be set manually.

ADJUSTING THE TIME

- Select Adjust time.
- Set a value.
- Press OK to confirm.

The function is only available in vehicles with satellite reception.

Vehicle position

SWITCHING TRANSMISSION OF THE VEHICLE POSITION ON OR OFF

Requirements:

- The vehicle is linked to a Mercedes-Benz ID.
- At least one digital Mercedes-Benz service is activated for the vehicle, which customers and/or third parties can use to display the vehicle position via the respective user accesses.

With this setting, you decide whether the vehicle position will be transmitted in order to show it to users who have access to the digital Mercedes-Benz services for this vehicle.

The function is country-dependent. For more information, consult a Mercedes-Benz Service Centre.

Multimedia system:

Settings » System » Data protection

► Activate or deactivate the Transmit veh. position function.

ⓘ Alternatively, you can also switch the function on or off in the status line via .

Setting permissions

Multimedia system:

Settings » System » Data protection » Permissions

In the Permissions menu, you can set access authorisations for various data points (such as a microphone, camera) used in an application. You can change permissions that have already been granted here. You can set permissions either for individual data points or for certain applications or websites.

► Select Requests or Apps/websites.

► Make the required settings for the permissions.

Bluetooth®

INFORMATION ABOUT BLUETOOTH®

Bluetooth® technology is a standard for short-range wireless data transfer up to approximately 10 m.

YOU CAN USE BLUETOOTH® TO CONNECT YOUR MOBILE PHONE TO THE MULTIMEDIA SYSTEM AND USE THE FOLLOWING FUNCTIONS, FOR EXAMPLE:

- Hands-free system with access to the following options:
  - Contacts (⟶ page 664)
  - Call lists (⟶ page 665)
  - Text messages (⟶ page 666)
- Internet connection (⟶ page 690)

Bluetooth® is a registered trademark of Bluetooth Special Interest Group (SIG) Inc.

ⓘ Internet connection via Bluetooth® is not available in all countries.

ACTIVATING/DEACTIVATING BLUETOOTH®

Multimedia system:

Settings » System » Internet and Bluetooth

► Switch Bluetooth on or off.

Wi-Fi

WI-FI CONNECTION OVERVIEW

You can use Wi-Fi to set up a connection to the Internet or to external network devices.

ⓘ The availability of the function is dependent on the country.

WITH REGARD TO THE WI-FI CONNECTION, YOU CAN CHOOSE BETWEEN:

- **Using the multimedia system as a Wi-Fi hotspot** (⟶ page 590)

The multimedia system in the vehicle serves as a Wi-Fi hotspot for mobile communication devices such as a smartphone or tablet PC.

- **Using a mobile communication device as a Wi-Fi hotspot (tethering)** (⟶ page 692)
  An external Wi-Fi hotspot is accessed for the Internet connection of the vehicle's multimedia system.

SWITCHING WI-FI ON OR OFF

Multimedia system:

Settings » System » Internet and Bluetooth

► Select Wi-Fi.

The controller is to the right: Wi-Fi is switched on.

When Wi-Fi is switched on, you can connect the multimedia system with external hotspots or make it available as a hotspot for external devices.

When Wi-Fi is switched off, it is not possible to establish a hotspot connection.

ⓘ Availability of the function is dependent on the respective country.

USING THE MULTIMEDIA SYSTEM AS A WI-FI HOTSPOT

Requirements:

- The device to be connected supports at least one of the types of connection described.
  The connection types shown depend on the device to be connected. The function must be supported by the multimedia system and by the device to be connected. The type of connection must be selected on the multimedia system and on the device to be connected.

ⓘ The data volume of the vehicle or an already connected tethering device is used for the data connection.
Vehicle data volume: depending on the vehicle equipment, you can purchase an Entertainment Package via the Mercedes-Benz Store. In order to use the data package included, you must conclude your own contract with a mobile phone network provider via the Mercedes-Benz App. This can be terminated at any time and incurs no costs. Without this contract it is not possible to use the Digital Extras included in the previously acquired Entertainment Package. The availability of this option is dependent on the country.
If the data package option is not available or can be upgraded, you can purchase data volume directly from the mobile phone network provider for a fee. The availability of this option is dependent on the country.

ⓘ Some functions may first need to be activated on the device being connected. More detailed information can be found in the manufacturer's operating instructions.

ⓘ The use of the vehicle data tariff by external devices is not available in all countries.

Multimedia system:

Settings » System » Internet and Bluetooth

- Select MBUX hotspot.
- Select one of the following connection options.

CONNECTING USING A QR CODE

Requirement: an app for scanning the QR code is installed on the device being connected.

Alternatively: the device being connected has an integrated QR code scanner (see the manufacturer's operating instructions).

- Scan the QR code shown.

  The WLAN connection is established.

CONNECTING USING A SECURITY KEY

- Select the vehicle from the device to be connected. The vehicle is displayed with the MBUX XXXXX network name.
- Enter the security key which is shown in the central display on the device to be connected.
- Confirm the entry.

GENERATING A NEW SECURITY KEY

- Select the Generate new security key option in the MBUX hotspot menu.
- Confirm the prompt with Yes.

  A new security key is generated.

A connection will be established with the newly created security key.

When a new security key is generated, all existing Wi-Fi connections are then disconnected. If the Wi-Fi connections are re-established, enter the new security key.

Game controller

CONNECTING A GAME CONTROLLER VIA BLUETOOTH®

WARNING

Risk of injury from using the game controller during the journey

If you use the game controller improperly during the journey, you could injure yourself in an accident.

Observe the following points when using the device during the journey:

- The driver of the vehicle must not use the game controller while driving.
- Only use the game controller for gaming on the front passenger display during the journey.
- Hold the game controller as low as possible on your lap. In the event of an accident, the game controller can be caught by the airbag and cause injuries.
- Do not use the hand straps of the game controller during the journey.

Requirements:

- Bluetooth® is switched on in the multimedia system and the game controller (⟶ page 589).

- The game controller uses the latest supported firmware (see operating instructions of the respective manufacturer).
- MBUX uses the latest software version (⟶ page 595).

Multimedia system:

Settings Apps Controller settings

- ▶ Select Add new controller.
- ▶ Set the game controller to pairing mode (see the operating instructions of the respective manufacturer).
- ▶ Select Bluetooth controller .
- ▶ Select a game controller.
  A message confirming the successful connection appears.

Two game controllers can be connected simultaneously in the central display.

ⓘ In order to obtain a full list of compatible game controllers, please contact Mercedes-Benz Support.

DISCONNECTING A GAME CONTROLLER

Multimedia system:

Settings Apps Game controller settings Show available controllers

- ▶ Select the game controller.
- ▶ Tap on 🗑.
- ▶ Confirm the Remove device from MBUX? with Yes.
  The game controller is then removed from the system.

CONNECTING VIA THE GAME CONTROLLER APP

Requirements:

- Your smartphone's operating system is using the latest software (see the operating instructions of the respective manufacturer).
- The "MBUX Gamepad" app is installed on your smartphone.
- Wi-Fi is switched on in the multimedia system (⟶ page 590).
- MBUX uses the latest software version (⟶ page 595).

Multimedia system:

Settings Apps Controller settings

- ▶ Select Add new controller.
- ▶ Select MBUX Gamepad .
  A QR code appears on the homescreen.
- ▶ Open the "MBUX Gamepad" app on your smartphone.
- ▶ Scan the QR code with your "MBUX Gamepad" app.
  The Connection successful – <Mobile phone> message is displayed.
- ▶ Rotate your smartphone and hold it with both hands.
  You can now use the MBUX Gamepad app as a game controller.

Up to 25 smartphones with the MBUX Gamepad app can be connected simultaneously as game controllers.

DISCONNECTING THE GAME CONTROLLER APP
Multimedia system:
Settings » Apps » Game controller settings » Show available controllers

- Select the game controller.
- Tap on .
- Confirm the Remove device from MBUX? with Yes.
  The game controller is then removed from the system.

System language

NOTES ON THE SYSTEM LANGUAGE
This function allows you to determine the language for the menus and navigation announcements. The selected language affects the characters available for entry. The navigation announcements are not available in all languages. If a language is not available, the navigation announcements will be in English.

SETTING THE LANGUAGE
Multimedia system:
Settings » System » Language

SETTING THE SYSTEM LANGUAGE
A list of the available system languages is shown.

- Select a language.
  The system language is switched to the selected language.

Setting the distance unit

Multimedia system:
Settings » System » Display

This function is not available in all countries.

- Select a unit for the distance.
- Activate Additional speedometer for an additional display in the driver display.

Activating/deactivating system PIN protection

Multimedia system:
Settings » System » Data protection » PIN protection

SETTING THE SYSTEM PIN
- Select Set PIN.
- Enter a four-digit system PIN.
- Enter the four-digit system PIN again.
  If both system PINs match, then the system PIN protection is active.

CHANGING THE SYSTEM PIN
- Select Change settings.
- Enter the current system PIN.
- Select Change PIN.
- Set a new system PIN.

SWITCHING SYSTEM PIN PROTECTION FOR SOFTWARE UPDATES ON OR OFF

- Select Protect software updates.
- Activate or deactivate the function.

Configuring suggestions

Multimedia system:

Settings » System » Suggestions

- Activate or deactivate Learning & suggestions.

  If the user profile is active and the function is switched on, personalised suggestions can be derived for activated applications.

- Select ⚙.
- Switch the options on or off individually.

  If an option is switched on and sufficient data has been gathered, personalised suggestions based on your user behaviour will be offered to you. These are, for example, navigation destinations visited, phone numbers dialled as well as suggestions based on your music preferences.

  Navigation

  When Allow destination suggestions is switched on, the vehicle makes suggestions based on your visited navigation destinations.

  If Commuter route is switched on, the navigation automatically detects that the vehicle is on a commuter route.

  Calls & messages

  Suggestions are offered for numbers dialled and messages sent.

  Comfort

  The vehicle makes suggestions based on the use of your comfort functions, e.g. which relaxation programme should be started when.

  Entertainment

  Suggestions are offered for the currently played media source. Suggestions are also made for online digital services, e.g. Spotify, TuneIn Radio and streaming services, as well as for categories, e.g. genre, artist and mood.

  Climate control

  The suggestions for quick temperature adjustment in the vehicle are displayed.

  Vehicle

  The suggestions for vehicle functions are displayed, e.g. for Parking Assist PARKTRONIC and for opening the boot.

  In-Car Calendar

  The suggestions for the calendar are displayed in the zero layer.

  Online voice services

  The suggestions are made available online based on your voice input and are offered on the zero layer.

ⓘ The suggestions offered depend on the equipment.

Deleting collected suggestions

Multimedia system:

Settings » System » Suggestions

- Select ↺.
- Select Yes.

  The suggestions are reset.

Software update

INFORMATION ON SOFTWARE UPDATES

Software updates keep your vehicle and the related systems up-to-date and prevent security flaws.

Software updates are available for vehicle components such as control units, convenience systems, locking and safety systems, driver assistance systems, suspension and drive systems as well as for the MBUX multimedia system. Software updates are available via the communication module or a Wi-Fi connection to an external hotspot.

The navigation maps are also updated via updates from external storage media (e.g. USB flash drive).

Install available software updates regularly. Otherwise the security of your MBUX multimedia system and individual vehicle components cannot be ensured.

ⓘ Software updates can be protected with a system PIN. Further information about the system PIN (⟶ page 593).

Further information about software updates can be found at https://me.secure.mercedes-benz.com.

CARRYING OUT SOFTWARE UPDATES

Requirements:

FOR SOFTWARE UPDATES VIA THE COMMUNICATION MODULE AND WI-FI:

- Your vehicle is linked to a Mercedes-Benz user account (⟶ page 680).
- Software updates without Mercedes-Benz user account: the Allow software updates option in the Software update menu is activated.
- For software updates via the communication module: an Internet connection exists via the communication module (⟶ page 691).
- For software updates via Wi-Fi: a connection to an external Wi-Fi hotspot exists (⟶ page 692).

ⓘ Depending on the software update, this is started via the communication module, Wi-Fi or an external storage medium.

ⓘ Online software updates cannot be performed via external Wi-Fi hotspots that are encrypted via TKIP.

ⓘ If the Wi-Fi hotspot requires logging in via the browser, once the connection is successfully established the browser will open in order to start the update. To start the download follow the instructions in the browser.

Multimedia system:

Settings » System » Software update »

STARTING A MAP UPDATE FROM AN EXTERNAL STORAGE MEDIUM

- ▶ Connect the storage medium with the vehicle via a media interface.

  A message about an available map update appears on the central display.
- ▶ Select the message.

- Select Start.
  The map update is started.

STARTING THE SOFTWARE UPDATE VIA THE COMMUNICATION MODULE
If the Automatic online update option is active, available software updates are downloaded and installed automatically. Activate the option in order to always keep your vehicle up-to-date and avoid security flaws.

- Select Automatic online update.
  The software update is downloaded and installed automatically.

If the option is deactivated, you will be informed of new software updates once. The updates are available for downloading for a limited period of time.

- Select an update from the list of available updates.
- Start the update.
  The software update is downloaded and installed automatically.

STARTING A SOFTWARE UPDATE VIA WI-FI
Some software updates require an additional connection to a Wi-Fi hotspot. The connection to an external hotspot can be established when the software update is started.

- Select an update from the list of available updates.
- Start the update.
- Establish the connection to a Wi-Fi hotspot.
  The update is downloaded and installed automatically.

For software updates requiring a safe vehicle status: when the last installation step is reached, a message appears on the central display after the vehicle is switched off. Follow the step-by-step instructions on the central display to complete the installation.

There are software updates that can only be installed when the vehicle is safely parked, there are no more people in the vehicle and the vehicle is locked.

INSTALLING SOFTWARE UPDATES
Software updates are installed automatically after they are downloaded. As soon as the software update has been completed, a message appears in the central display. It may be necessary to restart the MBUX multimedia system.

Some software updates require a safe vehicle status for the installation to be completed. They can only be carried out in a safely parked vehicle with the vehicle switched off. If this is necessary, a message appears on the central display after the vehicle is switched off.

- Follow the instructions on the central display.

For some software updates, you can set a time for installation. The installation is carried out automatically at the scheduled time. You do not need to be in the vehicle during installation. Note that the planned installation is cancelled as soon as the vehicle door is opened.

If an installation is available where you can set the time, a message appears on the central display after the vehicle is switched off.

- Follow the instructions on the central display.

The vehicle cannot be used while these software updates are being installed. Make sure that no persons or animals are in the path of your vehicle. Events stored in the vehicle's control units can be overwritten.

AVAILABILITY OF THE DRIVER AND CENTRAL DISPLAY
During the installation of software updates, it is not possible to use the vehicle, driver display and central display.

In rare cases, an error can occur during the installation. The multimedia system automatically attempts to restore the previous version.

If it is not possible to roll back to the previous version, a fault message will be shown every time the vehicle is started.

FAILURE OF THE DRIVER DISPLAY:
If the driver display fails or there is a malfunction, you may not recognise limitations in the functions of systems relevant to safety or the speed display, for example. This may impair the operating safety of the vehicle. Park the vehicle safely as soon as possible and notify a qualified specialist workshop (⟶ page 915).

Further information on software updates can be found at https://me.secure.mercedes-benz.com

FAILURE OF THE CENTRAL DISPLAY:
If the central display fails or the fault message is displayed continuously, some systems, such as the reversing camera, PARKTRONIC or climate control, are no longer available. Drive on carefully and consult a specialist workshop as soon as possible.

FRONT PASSENGER DISPLAY FAILURE (ONLY VEHICLES WITH MBUX SUPERSCREEN):
If the front passenger display has failed or the fault message appears continuously, functions and systems are no longer available on the front passenger display. Visit a qualified specialist workshop.

Resetting the multimedia system (reset function)

WARNING
Risk of accident due to failure of central display functions

While the multimedia system is reset, its functions, such as the reversing camera, are not available.

► Only reset the multimedia system when the vehicle is stationary.

Requirements:

- The vehicle is switched on.
- Some settings can only be reset when the vehicle is stationary.

Multimedia system:
Settings » System » Reset

WHEN RESETTING THE SYSTEM, PERSONAL DATA AND SETTINGS ARE DELETED, FOR EXAMPLE:

- Connected devices
- Individual user profiles
- Biometric data

The data used and saved in the multimedia system by the driver assistance systems is deleted.

- Select Reset.
  A query appears asking if the system should really be reset.
- Select Yes.
  The multimedia system is reset to the factory settings. The multimedia system is restarted after the system reset.

Due to data protection and the function of individual driving and driving safety systems, it is necessary to carry out a complete system reset before selling or transferring the vehicle to third parties or after using a rental vehicle. Make sure that all relevant data is deleted after the system reset.

AMG TRACK PACE

Function of AMG TRACK PACE

ⓘ This function is a Digital Extra (⟶ page 114).

With AMG TRACK PACE, the driving characteristics on race tracks can be analysed and optimised. You can drive on previously saved race tracks (e.g. Hockenheimring), or record and save new tracks. The driven lap times are stored for every track. These can be analysed and compared to other lap times to achieve the best possible race results. Additionally, acceleration and braking procedures can be measured and stored.

Note: Use AMG TRACK PACE only on closed-off routes outside the public traffic area. Adapt your driving style to your personal performance and environmental conditions. As the driver, you are solely responsible for driving your vehicle. Park your vehicle safely before operating the application.

Setting Track Race

Multimedia system:

TRACK PACE ▶▶ Track Race

RECORDING A NEW TRACK

- Select New track .
- At the desired starting point, select ▶ Start recording.
  The track recording starts at this point.

During track recording, sectors can be set to subdivide the track.

- Select Set sector.
- To finish track recording, select ■ Stop recording or cross the starting line again.
- Confirm the prompt with Yes.
- Select the weather.

ⓘ The temperature is determined automatically.

- Enter a name.
- Press OK to confirm.
  The track is saved under the name you entered.

SEARCHING BY TRACK NAME

- Select Search .
- Enter the track name.
  Tracks with the searched name are displayed.

MEASURING THE TIME ON THE SAVED TRACK

- ► Select All tracks.
- ► Select the desired track.
- ► Select ●●●.
- ► If you are already at the starting line, select Start timing.

or

- ► Select Navigate to to be navigated to the starting line.

Timekeeping begins automatically when the starting line has been crossed.

ⓘ Selecting AR enables you to switch to the AR view of the track.
Selecting also allows you to switch to the telemetry display.

- ► To end the timekeeping, select End timekeeping.
- ► Confirm the prompt with OK.
- ► Select the weather.
- ► Select Yes to save the times recorded for this track.

FADING IN DISPLAYS DURING TRACK RACE

THE FOLLOWING DISPLAYS CAN BE SUPERIMPOSED:

- Tyre temperature
- Miniature map
- Sector overview
- Engine data
- G-force display
- Lap overview

- ► Select Start timing .
- ► Select ▄▄▟.
- ► Drag the desired display from the grid to the left or right edge of the central display.
  The displays are shown during Track Race.

Selecting × on the active display deactivates it.

DISPLAYING THE ANALYSIS

- ► Select All tracks.
  An overview of all the driven tracks appears.
- ► Select a track.
- ► Select a session.

THE FOLLOWING DATA ARE DISPLAYED:

- Lap and sector times
- Average and maximum permissible speed
- Driver
- Vehicle
- Date
- Weather

- ► Select Add recording to use another session for comparison.
- ► Select ⮌ in order to return to the overview.
- ► Select Diagram.

► Set the desired parameters.
The analysis is displayed.

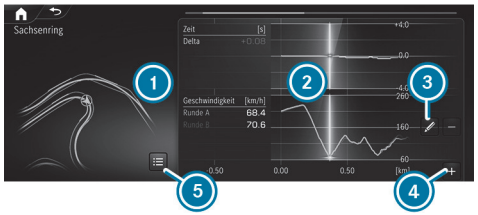

1 Lap overview
2 Parameter overview
3 Edits parameters
4 Adds a new parameter
5 Deletes parameters

THE FOLLOWING VALUES CAN BE SET FOR PARAMETERS, FOR EXAMPLE:

- Speed
- Longitudinal/lateral acceleration
- Steering angle
- Engine speed
- Engine oil/tyre temperature

Based on the analysis, you can check and optimise driving characteristics for any position on the track.

EXPORTING TRACKS (USB)

► Select Tracks .
An overview of all saved tracks appears.
► Select the desired track.
► Select options ••• of the desired track.
► Select Export track to....
The selected track can be exported to a USB storage device connected to the vehicle.

EDITING TRACKS AND RECORDINGS

► Select Tracks .
► Select the desired track.
► Select options ••• of the desired track.
► Select Rename or Delete.

or

► Select a track.
► Highlight the desired recording.
► Select ••• options.
► Select Exporting to... or Delete.

Setting Drag Race

Multimedia system:

TRACK PACE >> Drag Race

MEASURING ACCELERATION

- Select Drag race options.
- Select Acceleration.
- Set a starting speed or select Automatic.

  Measurement begins as soon as the specified starting speed has been reached.
- Set a target speed.

  Measurement stops as soon as the specified target speed has been reached.
- Start off and begin the measurement.

  Measurement begins when the vehicle accelerates.

Measurement can be stopped early by interrupting the acceleration procedure.

QUARTER MILE RACE

- Select Drag race options.
- Select Quarter-mile.
- Set a target distance.

  Measurement stops as soon as the specified target distance has been reached.
- Start off and begin the measurement.

  Measurement begins when the vehicle accelerates. Timing runs until the target distance or a maximum of one mile has been travelled.

Measurement can be stopped early by interrupting the acceleration procedure.

MEASURING BRAKING

- Drag Race options
- Select Braking.
- Set a starting speed or select Automatic.
- Start off and begin the measurement.
- Brake to a stop.

  Measurement is incremental, in steps of 10 km/h to a stop. If the braking procedure is started e.g. at a speed of 157 km/h, measurement starts as soon as 150 km/h has been reached.

STORING AND CALLING UP MEASURED VALUES

If measurement is completed or cancelled, a prompt appears asking whether the measurement should be saved.

- Confirm the prompt with OK to save.

CALLING UP SAVED MEASUREMENTS

- Select History.
- Select Acceleration, Quarter-mile or Braking.
- Select a measurement.

  The desired measurement is displayed in detail.

or

- Delete a measurement.

Calling up the telemetry display

Multimedia system:

TRACK PACE » Telemetry

The telemetry display shows current vehicle data as a digital value and as a diagram. Up to four parameters can be selected that are to be shown in the display.

FOR EXAMPLE:

- Engine speed
- Wheel angle
- Speed
- Steering angle

► Set the desired parameters.

► Set the time.
The set parameters are evaluated in the diagram for the time set.

Configuring AMG TRACK PACE

Requirements:

To connect a mobile device to the Stories app:

- The Mercedes-Benz Stories App is installed on the mobile device.
- The mobile device is connected to the multimedia system via Wi-Fi (⟶ page 590).

Multimedia system:

Stories App » ⚙

CONNECTING A MOBILE DEVICE VIA THE MERCEDES-BENZ STORIES APP

Using the Mercedes-Benz Stories App, you can record videos and synchronise them with recorded routes.

► Select Stories App.

► Select Authorise new device.

► Start the Mercedes-Benz Stories App on the device to be connected.

► Select Connect with vehicle.

► Use the mobile device to scan the QR code which is shown on the central display.
The device is authorised.

DE-AUTHORISING THE MOBILE DEVICE

► Select Stories App.

► Select a device.

► Confirm the prompt with Yes.
The device is de-authorised.

SETTING THE TRACK PACE READOUT ON THE HEAD-UP DISPLAY AND DRIVER DISPLAY

► Select IC and HUD contents.

► Activate or deactivate the desired contents.
The content on the head-up display and driver display is adjusted.

ⓘ Further information on the head-up display (⟶ page 534).

ⓘ Further information on the driver display (⟶ page 516).

SETTING ACOUSTIC FEEDBACK

► Select Acoustic feedback.

A scale with values from 0 to 10 is shown.

► Select a setting.

SHOWING STATISTICS

► Select TRACK PACE statistics.

Statistics on the current user profile are displayed.

THE FOLLOWING DATA ARE DISPLAYED:

- Driving time
- Distance driven
- Tracks recorded
- Track races recorded
- Laps recorded
- Drag races recorded
- Maximum speed

ACTIVATING THE AMBIENT LIGHTING

If this function is active, the vehicle interior is lit in red or green depending on the delta time.

► Select Ambient light.

► Activate or deactivate the function.

SETTING THE DASHCAM

If the vehicle is equipped with a dashcam, it can be used in AMG TRACK PACE.

► Select Dashcam.

► Select Track Race or Drag Race and activate Activate recording.

► You can set which overlay is to be used in the recorded video under Video overlay contents.

Plug-in hybrid settings

Configuring the charging settings

Multimedia system:

Hybrid Charging

SETTING THE CHARGING PROGRAM

- Select Home, Work or Standard.

OPENING THE SOCKET FLAP IN THE MMS

- Press Open socket flap to open the socket flap.
- The charging process can be interrupted using Cancel charging. The charging process is ended and the charging cable is unlocked.

Further notes on charging with alternating current: (→ page 387).

Further notes on charging with direct current: (→ page 393).

UNLOCKING THE CHARGING CABLE (MODE 3 OR 4)

When the function is active, the charging cable is unlocked when the maximum state of charge is reached.

- Select Home or Work.
- Activate or deactivate Unlock charging cable.

ACTIVATING OR DEACTIVATING LOCATION-BASED CHARGING

- Select Charging program, home or Charging program, work.
- Activate or deactivate Select based on location.

When the function is activated, the vehicle's current position is saved as one of the selected options. When arriving at this address again, a brief prompt appears as to whether the respective charging program should be selected.

ACTIVATING OR DEACTIVATING QUICK CHARGING (DC CHARGING)

- Activate or deactivate the Quick charge function.

The Quick charge function increases the maximum possible charging power at charging stations to up to 60 kW in order to charge the vehicle's high-voltage battery faster. After the charging process is complete, the charging power in the "Standard" charging programme is again limited to 20 kW in order to protect the high-voltage battery.

Mercedes-AMG vehicles: the Quick charge function is not available for Mercedes-AMG vehicles.

SETTING THE DEPARTURE TIME

The set departure times are used for the vehicle's pre-entry climate control function and for predictions regarding the approximate state of charge and range at the time selected. The start of the charging process is optimally timed for the next departure time (up to 90% of the state of charge is charged immediately and may be followed by a charging break), when fast charging is deactivated. When fast charging is activated, the charging process starts immediately, irrespective of the next departure time.

► Select Next departure time.

THE FOLLOWING CHARGING TIMES CAN BE SELECTED:

- Individual charging times
- a Week profile

SETTING AN INDIVIDUAL DEPARTURE TIME

► Select Add new time and set the time.

or

► Select [✎] and adjust an existing departure time.

SETTING REPEAT DAYS

► Select Add new time and set the time.

► Mark the relevant weekdays for which the departure time will apply and confirm with [OK].

or

► Select [✎] and edit existing repeat days.

SETTING THE CHARGING BREAKS (AC CHARGING)

Up to four breaks in the charging process can be set during which the vehicle is not charged, even if it is connected to a charging station.

► Select Charging interruptions.

► Select Add new time and then set and save the times for the beginning and end of the break.

► Activate or deactivate the charging breaks that have been set.

Set charging breaks can be edited with the [✎] button or deleted with the [🗑] button.

Mercedes-AMG vehicles: you cannot set charging breaks for Mercedes-AMG vehicles.

CHARGING POWER

► Select [ⓘ].

The reasons for a reduction in the current charging power are displayed.

THE FOLLOWING INFLUENCES CAN LEAD TO A REDUCTION IN THE MAXIMUM CHARGING POWER:

- Inadequate battery temperature
- State of charge (SOC)
- Charging station with reduced charging power
- Charging system
- Charge control

SETTING THE MAXIMUM STATE OF CHARGE

► Select Maximum charge level.

► Set the desired percentage.

The high-voltage battery is charged up to the set percentage as a maximum.

ⓘ The percentage can be set between 50% and 100% in increments of 10%.

ⓘ As soon as the maximum state of charge is reached, a notification is shown on the central display that the charging process is complete and the journey may be continued.

Overview of the energy flow display in the multimedia system

The active components of the hybrid system are highlighted brightly on the energy flow display. The energy flow between the individual components is shown in colour.

THE COMPONENTS DISPLAYED ARE:

- State of charge for the high-voltage battery
- Combustion engine
- Energy flow
- High-voltage battery

THE ENERGY FLOW IS SHOWN IN DIFFERENT COLOURS ACCORDING TO OPERATING STATUS:

- **White:** constant energy flow
- **Red:** high energy flow (boost effect)
- **Green:** low-emission energy flow for recuperation, electric mode and charging the high-voltage battery

Calling up the energy flow display

Multimedia system:

Info

► Select Energy flow.

The energy flow in the vehicle will be displayed.

Information on the status of the hybrid system and the current state of charge for the high-voltage battery will be displayed in addition to the energy flow.

Fit & Healthy

Setting ENERGIZING seat kinetics

Requirements:

ⓘ These functions are only available for seats with a memory function.

Multimedia system:

Comfort » Seat

- Select Seat kinetics.

ENERGIZING seat kinetics can support back health by changing the seat position during a journey. This involves repeatedly stressing and relieving the muscles and joints through minor movements of the cushion and backrest.

STARTING SEAT KINETICS

- Select ▶ for the desired seat.

  The program will run for the set duration.

CONFIGURING SEAT KINETICS

- Select ⚙ for the desired seat.
- Select Backrest or Seat surface.
- Select the desired duration for the selected seat.

Vehicles with multicontour seats:

In addition to the seat backrest and seat cushion, the lumbar region can be activated for the function.

- Activate or deactivate Including lumbar.

ENERGIZING COMFORT

OVERVIEW OF ENERGIZING COMFORT PROGRAMMES

You can watch an animation on this topic via the following link:

ⓘ Note that the available programmes and the associated functions depend on your vehicle equipment. Depending on your equipment, fewer functions may be available.

PROGRAMME OVERVIEW

- Refresh: Can have a refreshing effect with short, cool puffs of air. The seat is ventilated, the vehicle interior is illuminated with cool colours and the programme is completed with appropriate sound. In addition, the vibration massage in the cushions can loosen your muscles.
- Warmth: Can increase the comfort level of the vehicle occupants. Seat, surface and steering wheel heater provide soothing warmth. The programme is completed with unobtrusive sound and warm colours.
- Vitality: Can counteract diminishing attentiveness in monotonous driving situations. The activating stimulation of the vehicle occupants is carried out with invigorating sound, activating light and a vitalising massage.

- Joy: Can promote a positive mood in the vehicle occupants as well as mental regeneration. This results from the activation of a massage programme, friendly sound and illumination with suitable colours.
- Well-being: Can help relax the vehicle occupants. This is achieved through a relaxing massage programme, friendly light and calming sound.
- Forest glade: Can have a calming and soothing effect on the vehicle occupants thanks to the acoustics of the forest. The ambience is supported with a suitable animation, colours, sound and other vehicle functions, such as a massage programme.
- Sea sounds: Can help calm the vehicle occupants. The acoustics of wave sounds and seagulls in combination with other vehicle functions, such as a massage programme, create a relaxing seashore atmosphere.
- Summer rain: Can help relax the vehicle occupants. The relaxing effect of a rain shower can be experienced via acoustics and other vehicle functions, such as a massage programme, inside the vehicle.
- Motion sickness prevention (only front passenger): Can help to prevent, mitigate or delay symptoms of travel sickness. The light, sound and animation are adapted accordingly. The air conditioning system and the seat cushion are actively targeted. The effect can be enhanced by manually tilting the backrest back slightly. At the end of the programme, the seat cushion and the seat backrest are automatically returned to their original position.
- Power Nap: The programme consists of three phases.
  - Falling asleep phase: here relaxing music is played.
  - Sleeping phase: the active functions are deactivated or restricted as much as possible.
  - Waking phase: here slightly stimulating music is played. Additionally, functions such as seat ventilation and a massage programme are activated.
- Golfing Focus: Contains spoken instructions to help you prepare for an upcoming golf game.

Most programmes that have been started for one seat can also be transferred simultaneously to another seat.

STARTING THE ENERGIZING COMFORT PROGRAMME

WARNING
Risk of entrapment when using the ENERGIZING COMFORT programme Power Nap

With the Power Nap ENERGIZING COMFORT programme the following systems are moved automatically if required:

- Seats
- Side windows
- Sliding sunroof
- Roller sunblinds

This can cause you or another vehicle occupant to be trapped.

► Make sure that there is sufficient space behind the front seats.

► Make sure that no body parts are in the areas of movement.

WARNING
Increased risk of injury in the event of an accident when using the ENERGIZING COMFORT programme Motion sickness prevention for the front passenger as a result of an incorrect seat position

The Motion sickness prevention programme is only available for the front passenger. If the seat position is not adjusted correctly, there is an increased risk of injury in the event of an accident.

- When adjusting the seat backrest to a slightly flatter position, always maintain an upright sitting posture. Never adopt a reclined position while driving.
- Always ensure that the belt is routed correctly, especially in the shoulder and hip regions. Observe the notes on the protection potential of the restraint systems and the correct belt installation in these operating instructions.
- If necessary, correct the seat adjustment (longitudinal adjustment, seat backrest inclination). If in doubt, do not adopt a flatter backrest angle.
- Vehicle occupants are always responsible for the seat position and seat belt routing.

WARNING
Increased risk of injury in the event of an accident when using the ENERGIZING COMFORT programme Motion sickness prevention for front passengers in conjunction with a child restraint system

The Motion sickness prevention programme is only available for the front passenger. If the programme is incorrectly used in conjunction with child seats and booster seats, there is an increased risk of injury in the event of an accident.

- Ensure that no child seats or booster seats are installed on the front passenger seat.
- The programme must not be used when a child restraint system is in use on the front passenger seat.

Requirements:

- The vehicle is switched on.

FOR THE START OF POWER NAP:

- Only the power supply is on.
- The doors are closed.
- The vehicle is secured against rolling away.
- The state of charge of the high-voltage battery is sufficient for the use of the auxiliary climate control.

Multimedia system:

Comfort ENERGIZING COMFORT

STARTING AND STOPPING A PROGRAMME

- Select a programme.
- **To start the programme:** select ▶ for the desired seat.
- **To stop the programme:** select ■.

ⓘ If, during an active programme, a function requirement is no longer met, a corresponding message appears. The active programme is cancelled.

ⓘ Further information on occupant safety in connection with the anti-travel sickness programme (→ page 140)

STARTING A POWER NAP

- Select Power Nap.
- Select ▶ for the desired seat.

WHEN THE VEHICLE IS STATIONARY, THE FOLLOWING ACTIONS ARE CARRIED OUT WHEN POWER NAP IS STARTED:

- The roller sunblinds are extended.
- The doors are locked.
- The windows and sliding sunroof are closed.
- The seats are moved into the fully reclined position.
- The parking brake is applied.

- **To stop the programme:** select ■.

ENERGIZING apps

FUNCTIONS OF THE ENERGIZING APP

FUNCTION OF THE ENERGIZING COACH

REQUIREMENTS FOR USE OF THE ENERGIZING COACH

- The ENERGIZING COACH service is activated in the Mercedes-Benz Portal or the Mercedes-Benz App.
- The Mercedes-Benz ENERGIZING app is installed on the mobile phone to use the service.

With ENERGIZING COACH you can evaluate the driving and driver situation. Depending on the situation, it offers recommendations for the start of an appropriate ENERGIZING COMFORT programme.

THE FOLLOWING PROGRAMMES COULD BE SUGGESTED:

- Vitality

  As an activating programme in monotonous driving situations or for long journey times, for example
- Joy

  As a balancing programme in demanding driving situations
- Refresh

  As a refreshing programme when temperatures rise
- Warmth

  As a warming programme when temperatures drop

By connecting a Garmin fitness tracker, for example the Garmin vívoactive® 3, additional information can be entered into the evaluation for the recommendation of an ENERGIZING COMFORT programme. The additional information includes the stress level, that is calculated by the fitness tracker. The stress level is based primarily on the pulse rate.

REQUIREMENTS FOR THE INTEGRATION OF ADDITIONAL INFORMATION VIA A GARMIN FITNESS TRACKER:

- Your fitness tracker is connected with your Garmin account.
- Your Garmin account is linked to your Mercedes-Benz user account.

If you wear your Garmin fitness tracker at night also, the sleep data is included in the evaluation of the ENERGIZING COACH.

REQUIREMENT FOR THE INTEGRATION OF THE SLEEP DATA:

- The Garmin fitness tracker is synchronised with the Garmin account before the beginning of the journey.

ⓘ If ATTENTION ASSIST determines an excessive lack of attention, ENERGIZING COACH makes no further suggestions. Further information about ATTENTION ASSIST (⟶ page 422).

CALLING UP THE ENERGIZING COACH DISPLAY

Requirements:

- The fitness tracker is connected with your Garmin account.
- Your Garmin account is connected with your Mercedes-Benz user account in the Mercedes-Benz ENERGIZING app.
- The mobile phone is connected to the multimedia system (⟶ page 659).
- You are logged in with your Mercedes-Benz user account both in the vehicle and in the Mercedes-Benz ENERGIZING app.

Multimedia system:

⟶ ⌂ ⏩ Apps ⏩ ENERGIZING COACH

CALLING UP THE ENERGIZING COACH

► Your current pulse as well as an evaluation of your pulse for the last 30 minutes driving time are shown.

A corresponding fault message is shown if there is no mobile phone connected or no pulse can be sent to the system for an extended period.

ⓘ Only pulse values in the range of 30 - 140 (possibly 150) bpm are shown on the central display. The pulse values have no medical validity but are only informative in nature and are therefore also not required to be accurate.

CONNECTING A NEW DEVICE

► Select ⚙.

► Select Device selection.

A list of connected mobile devices will be shown.

► Select the desired device from the list.

Navigation and traffic

Switching navigation on

Multimedia system:

→ [⌂]

► Alternatively, press the [⌂] button on the steering wheel on the right (→ page 565).

The zero layer with the digital map is displayed.

Calling up the navigation module in the expanded view

Multimedia system:

→ [⌂] » Navigation

ⓘ Navigation means: tap on navigation module ① on the zero layer (→ page 613).

The navigation module is called up in the expanded view and shows the route overview with additional functions.

► Select one of the functions (→ page 626).

THE FOLLOWING FUNCTIONS ARE AVAILABLE, FOR EXAMPLE:

- Switch the traffic information display on or off.
- Select Previous dest..
- Search for Filling stations.
- Search for Parking spaces.
- Select Other routes.
- Enter a destination with [🔍].
- Make settings for View, Messages & tones and Route with [⚙].

Navigation overview

DIGITAL MAP



① Navigation module (reduced view)

Route guidance active:

The navigation module shows the information relevant to the route in the zoomed-out view, e.g. the arrival time at the destination or a traffic delay

[⊗] Ends the current route guidance

Tapping opens the navigation module in the expanded view with the Route (→ page 626)

(2) Enters a destination
(3) Searches for a parking space
(4) Sets map orientation and map type
(5) Current vehicle position (vehicle symbol or arrow)
(6) Display area with entertainment sources, phone, active applications and suggestions
(7) Navigation window shows the next driving manoeuvre in the reduced view when route guidance is active or an enlarged view with a detailed display of the upcoming driving manoeuvre when approaching a driving manoeuvre, e.g. a map section, 3D images or lane recommendations

When route guidance is active, tapping on the navigation window opens the route monitor, which shows information for the entire route, e.g. upcoming driving manoeuvres, destinations, motorway exits or rest areas with points of interest

Switches off navigation announcements
Switches on navigation announcements

PRESSING (4) SEVERAL TIMES CHANGES THE MAP ORIENTATION IN THIS ORDER:

- 2D and to the north
- 2D and in the direction of travel
- 3D and in the direction of travel
- Map with complete route

If the map is moved, the map switches between 3D direction of travel and 2D north orientation.

Destination entry

NOTES ON DESTINATION ENTRY

WARNING
Risk of distraction from operating integrated communication equipment while the vehicle is in motion

If you operate communication equipment integrated in the vehicle when driving, you could be distracted from the traffic situation. This could also cause you to lose control of the vehicle.

- Only operate this equipment when the traffic situation permits.
- If you cannot be sure of this, stop the vehicle whilst paying attention to road and traffic conditions and operate the equipment with the vehicle stationary.

When operating the MBUX multimedia system, observe the legal regulations of the country in which you are currently located.

ENTERING A POI OR ADDRESS

Requirements:

- **For the online search:**
  - There is an Internet connection.
  - Digital Extras are available.
  - You have created a Mercedes me ID.
  - The vehicle is linked to the Mercedes me ID and you have accepted the terms of use.
  - Further information can be found at: https://www.mercedes.me

- The Digital Extra is available and has been activated.

ⓘ If Online Search is not available, the search is performed using the data of the digital map.

Multimedia system:

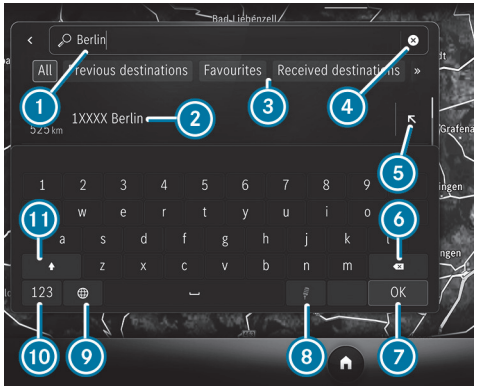

Example: entering a POI or address

(1) Input line with current entry
(2) Search result
(3) Selects destination search, displays further destination searches with double arrow
(4) Deletes an entry
(5) Adopts the search result in the input line and continues the search
(6) Deletes the last character entered
(7) Hides the keypad
(8) Starts the MBUX Voice Assistant (⟶ page 545)
(9) Sets the written language
(10) Switches to digits and special characters
(11) Switches to upper-case or lower-case letters

► Enter a destination. The entries can be made in any order.
The search results are displayed in a list.

ⓘ Online search results for POIs may contain additional information, for example opening times and ratings. The information is provided by an online map service.
This online function is not available in all countries.

THE FOLLOWING ENTRIES CAN BE MADE, FOR EXAMPLE IN (1):

- Town, street, house number or street, town
- Postcode
- POI name or POI category, e.g. Restaurants
- Town, POI name
- Contact name
- Junctions in the following entry format: "road A" and "road B"
- Geo-coordinates (⟶ page 618)

► Hide the keyboard with OK.

► Select the destination in the list.
The following menu shows the selected destination with the address information and a corresponding map section.
The menu enables the route to be calculated.

SELECTING A DESTINATION SUGGESTION

Requirements:

- The Allow destination suggestions option is switched on (⟶ page 594).
- The multimedia system has gathered sufficient data in order to show destination suggestions.

Multimedia system:

► Select Suggestions and accept a destination suggestion.

or

► Select a destination suggestion directly on the zero layer (⟶ page 558).
The route is calculated in the following menu.

ⓘ If Suggestions has been selected, a menu is available via [•••]. The menu offers settings for the suggestions and memory functions.

ⓘ Managing destination suggestions (⟶ page 637).

SELECTING PREVIOUS DESTINATIONS

Multimedia system:

► Select Previous destinations.

► Select a destination.
The following menu enables the route to be calculated.

ⓘ You can save a destination as a favourite (⟶ page 637).

SELECTING A POI

Requirements:

- **For use of personal POIs:** a USB device is connected with the multimedia system.
- Personal POIs with the GPS Exchange format (.gpx) have been saved in the PersonalPOI folder on the USB device.

Multimedia system:

► Select POIs.

► Select one of the displayed quick-access categories, e.g. [P].

► Select the POI.
The following menu enables the route to be calculated.

or

► Select All categories or Personal POIs (see requirements).

► Select the category.

► Select the POI.
The following menu enables the route to be calculated.

SETTING A SEARCH FILTER AFTER SELECTING A POI CATEGORY

THE PRESET SEARCH POSITION DEPENDS ON THE STATUS OF THE ROUTE GUIDANCE:

- If route guidance is not active, In the vicinity is searched.
- If route guidance is active, Along the route is searched.

- ► When the search results are displayed, select Filter.
- ► Select the search position, e.g. In the vicinity.
- ► If a route with intermediate destinations already exists and Near destination has been selected in the search filters, the destination is selected for the search.

or

- ► Select the desired travelling time to the point of interest.
- ► Select Search results.

CONFIGURING CATEGORIES FOR QUICK ACCESS

THE CATEGORIES ARE DISPLAYED:

- As symbols after calling up the destination entry via [🔍]
- As a list after calling up All categories

- ► In the POI menu, select All categories.
- ► Select [☆] or [★] for a category.
  Tapping on [☆] adds the category.
  Tapping on [★] removes the category.
- ► Use [↩] to change back.
  The new categories are shown after the destination entry is called up the next time.

ⓘ If all available quick-access positions are full, select the category to be replaced.

CHANGING THE ORDER OF QUICK-ACCESS CATEGORIES

- ► In the POI menu, press and hold a category for quick access.
- ► Tap on the arrows next to the selected category.
  The arrows for the other categories are greyed out.
- ► Drag the category up or down.
- ► Select [✓].

DELETING QUICK-ACCESS CATEGORIES

- ► Select [★] for the chosen category.
- ► Select Delete.
- ► Select [✓].

CHANGING CATEGORIES FOR PERSONAL POIS

- ► Select Personal POIs.
- ► Press on a category as long as is necessary until a menu appears.
- ► Select Change name and enter a name.
- ► Select Change icon and select a symbol.
- ► Select Delete and confirm the prompt with Yes.

SELECTING A CONTACT FOR DESTINATION ENTRY

Requirements:

- A mobile phone is connected to the multimedia system (⟶ page 659).
- The contacts from the mobile phone have been downloaded .
- The contact has a navigable address.
- The address data can be located on the digital map.

Multimedia system:



► Enter a contact in the entry line.

► Select the address.

The following menu allows you to calculate the route.

ⓘ Alternatively, after calling up the destination entry, you can enter the name of a contact in the search field.

ENTERING GEO-COORDINATES

Multimedia system:



► Enter the geo-coordinates as latitude and longitude.

EXAMPLES OF INPUT FORMATS:

- 47°58'11"N 7°57'25"E (degrees, minutes and seconds)
- 47.969722 7.956944 (decimal degrees)

► Confirm the entry.

The following menu enables the route to be calculated.

SELECTING A DESTINATION ON THE MAP

Multimedia system:



► If necessary, move the map (⟶ page 643).

► Press and hold on the map.

Available destinations are displayed.

or

► Briefly press on a POI symbol.

The POI is selected. If there are several POIs at this map position, a list appears.

► Select the destination in the Selected objects list.

The following menu enables the route to be calculated.

SELECTING A DESTINATION FROM FAVOURITES

Requirements:

- Destinations are saved as favourites.

  Save a previous destination or a destination suggestion as a favourite (⟶ page 637).

Multimedia system:



► Select Favourites.

► Select a favourite.

The following menu enables the route to be calculated.

ADDRESSES FOR HOME AND WORK ARE ALREADY SET

- ► Select Home or Work.
  The route is calculated in the following menu.

ADDRESSES FOR HOME AND WORK ARE NOT YET SET

- ► Select Home or Work.
  The prompt No "Home" address available. Set address now? appears, for example.
- ► Select Yes.
- ► Search for or select the address.
- ► Select Save.

DELETING FAVOURITES

- ► Select ••• for a favourite.
- ► Select Delete.

or

- ► Select Delete all.
- ► Confirm the prompt.
  When all the favourites have been deleted, Add favourite is available, for example.

SELECTING RECEIVED DESTINATIONS

Requirements:

- There is an Internet connection for receiving external destinations.
- A destination has been sent to the vehicle.

Multimedia system:



The vehicle can receive destinations from Digital Extras. You will be informed when a destination is received.

- ► Select Received destinations.
- ► Select a destination.
  The route is calculated in the following menu.

ⓘ You can save a received destination in the favourites (→ page 637).

DELETING RECEIVED DESTINATIONS

- ► Select ••• for a destination.
- ► Select Delete or Delete all.
  The destination or all destinations are deleted.

Route

CALCULATING A ROUTE

Requirements:

- **For online content and accessing a website:**
  - An active Internet connection is indicated in the status line on the central display with the ⇄ symbol.
  - The www button is available.
  - Online content and an Internet address are available for the destination.

This function is not available in all countries.

Using the web browser requires additional data volume (⟶ page 691).



Example: detailed display

1. Calls up alternative routes
2. Adds the chosen destination to the existing destinations as the next intermediate destination and recalculates the route
3. Calculates a new route to the chosen destination
4. Selects a point of interest in the vicinity of the destination
5. Detailed display with destination address, online content

After selection of 2 or 3, the route is recalculated.

- Select one of the options.

CALLING UP ALTERNATIVE ROUTES

- Select Routes.
- Select an alternative route.

STARTING ROUTE GUIDANCE

- Select Let's go!.

CALLING UP THE DETAILED DISPLAY WITH DESTINATION ADDRESS

- Pull the bar above the Let's go! symbol upwards.

  Depending on the destination selection and availability, online content, for example ratings and weather information, is shown.
- **To share a destination:** select Share.

  This option allows you to scan the displayed QR code.
- **To save a destination as a favourite:** select Favourite and then an option.
- **To call up an Internet address:** if an Internet address is available, select www.
- **To call the destination:** if a telephone number is available, select Call.

SEARCHING FOR POIS IN THE VICINITY OF THE DESTINATION SHOWN

- Select In the vicinity.
- Search using categories, enter a search entry or search for a personal POI (⟶ page 616).

ADDING AN INTERMEDIATE DESTINATION TO THE EXISTING ROUTE OR STARTING A NEW ROUTE GUIDANCE

- Select Add.

  The selected destination address is set as the next intermediate destination. Route guidance begins.
- **There are already four intermediate destinations:** confirm the prompt with Yes and select an intermediate destinations in the route overview (⟶ page 626), that should be overwritten with the new intermediate destination.

or

► Select Replace.
The selected destination address is set as a new destination. Route guidance begins.

PAYING FOR THE CHARGING PROCESS ON A ROUTE WITH MB.CHARGE PUBLIC (PLUG-IN HYBRID)

Requirements:

- The MB.CHARGE Public Digital Extra is available and can be booked in the Mercedes-Benz Portal.
- The Digital Extras "Navigation with Electric Intelligence", "Display of charging stations" and "MB.CHARGE Public" are activated.
- **To select a charging station:** the Schedule charging stops option is switched on in the multimedia system.
- **For authentication at the charging station:** after activation in the Mercedes-Benz Portal, you have concluded a charging contract with your payment details with the respective contractual partners.
- **For authentication using the app:** the Mercedes-Benz App is installed on the external device, e.g. tablet or smartphone.
- For charging stations without remote access, you have purchased an RFID card for the contracting partner.

ⓘ This function is not available in all countries.

Multimedia system:
Navigation

ⓘ **OBSERVE THE FOLLOWING INFORMATION:**

- Read the notes on charging the high-voltage battery at the charging station (⟶ page 375).
- Read the notes on charging the high-voltage battery at the charging station (⟶ page 379) and (⟶ page 381).
- **Before selection of a charging station:** the data for the charging stations is based on the online content available from the respective third-party provider.
- Observe the local information and conditions.

ⓘ With the Plug & Charge charging function of MB.CHARGE Public, you can charge the vehicle at public Plug & Charge-enabled charging stations. The charging process starts immediately when the charging cable is plugged into the charging station. No further authentication is required. Communication between the vehicle and the charging station takes place directly via the charging cable.
This charging function is not available in all countries.

► **To select a charging station:** tap on a symbol on the map for a charging station or on a group of symbols for several charging stations.

► If a group of symbols is selected, select the charging station from the list.

THE FOLLOWING INFORMATION IS DISPLAYED (IF AVAILABLE):

- Name of the charging station operator
- Address of the charging station
- Plug with availability and information about charging capacity
- Opening times
- Name of the charging station
- Travel time and distance of the charging station from the vehicle
- Authentication method
- Contact information of the charging station operator
- General costs and charging costs
- Estimated charging costs and your available energy volumes, if available
- Display of available reviews and the ability to review with up to five stars
- Availability prognosis
- Information on Green Charging

  Mercedes-Benz provides high-quality certificates of origin to ensure that an equivalent amount of electricity from renewable sources is fed into the grid for charging processes carried out via MB.CHARGE Public.

► Calculate the route (⟶ page 619).

ⓘ If the function is available, the start/stop of the charging process can be selected.

► **To access a charging station remotely (start/stop):** select a charging station in the map menu of the app or the MBUX multimedia system.

► Display the details using the widget (programme symbol).

► Select Start charging process.

The charging process starts. In addition, the payment agreement saved with the third-party provider is authorised.

ⓘ Remote access is not available for some charging stations. In this case use your RFID card to activate the charging process (if available).

► If required, enter the PIN for personalisation.

► Confirm the action.

► If required, select the plug ID from the list shown.

The selected charging cable connector is unlocked.

► Start the charging process.

The start of the charging process is shown.

► Select the Stop charging process display button in the app.

The charging process is ended.

Payment is processed automatically.

IF DATA FOR THIRD-PARTY PROVIDERS IS AVAILABLE, YOU WILL RECEIVE THIS INFORMATION:

- Overview of the charging process
- Estimated cost

ⓘ There may be differences between the costs listed and the costs billed.

SWITCHING LOW EMISSION ZONES FOR THE ROUTE ON OR OFF

Requirements:

- Digital Extras are available.
- You have created a Mercedes me ID.
- The vehicle is linked to the Mercedes me ID and you have accepted the terms of use.
- The Digital Extra Traffic restriction is available and activated in the Mercedes-Benz Portal. The Digital Extra is free of charge after registration for the term offered.

Multimedia system:

Navigation View

THE FOLLOWING FUNCTIONS SUPPORT CLIMATE-FRIENDLY MOBILITY:

- Avoiding or exiting a low emission zone
- **Plug-in hybrid:** switch to the Electric drive program when entering a low emission zone and the selection option for charging stations

ⓘ The route can be influenced in the Route menu.
If you switch on the Area with low emission zones avoid option, all restricted low emission zones for the vehicle on the route are avoided (⟶ page 625).
If the route option is switched off, you will drive through low emission zones along the route. A warning is displayed before you drive into a low emission zone.

► Switch on Traffic restrictions.

The low emission zones along the route are shown on the digital map and in the route overview.

Before you enter a low emission zone, you will be shown a notification in the central display.

Plug-in hybrid: the vehicle takes zones with traffic restrictions into account and drives electrically in these zones. These are low emission zones and in future also zero emission zones.

ROUTE GUIDANCE IS ACTIVE:

- When the vehicle enters a low emission zone, it switches to the Electric drive program. Electrical energy is reserved for low emission zones ahead. Thus the vehicle can switch to the Hybrid drive program when it exits a zone.

ROUTE GUIDANCE IS NOT ACTIVE:

- When the vehicle enters a low emission zone, it switches to the Electric drive program.

STATE OF CHARGE OF THE HIGH-VOLTAGE BATTERY IS LOW (PLUG-IN HYBRID)

► In the menu, select Charging station (⟶ page 619).

► Select the charging station in the list or in the digital map.

AVOIDING OR EXITING A LOW EMISSION ZONE

Further options are available in the menu depending on the current vehicle position and the location of the destination.

► **Current vehicle position is outside of the low emission zone:** select Avoid zone temporarily.

A detour is made around the low emission zone. The route is recalculated.

- **Current vehicle position is inside the low emission zone:** select Leave zone quickly.
  The vehicle exits the low emission zone. The route is recalculated.
- **The destination is in the low emission zone:** select Park close to the zone.
- Select a parking option in the list or on the map.
- **To permanently avoid a low emission zone:** pull the bar upwards and switch on Avoid zone permanently.

OVERVIEW OF THE RANGE DISPLAY SERVICE (PLUG-IN HYBRID)

REQUIREMENTS:

- The fee-based Digital Extra "Range Display" is available and activated in the Mercedes-Benz Portal.
- The Range option is switched on (⟶ page 649).

The fuel range (purple) and the electric range (white) are shown on the map as a closed line around the current vehicle position.

IN THE FOLLOWING CASES, THERE IS NO DISPLAY ON THE MAP:

- The overall range is very large.
- If the fuel level is less than 10 %.
- If the electric range of the vehicle is less than 6 km.

SELECTING A ROUTE TYPE

Multimedia system:

Navigation » Route

USING TRAILER MODE AND ONLINE ROUTES

The route is calculated as a fast route with a short journey time.

Trailer mode is available if a trailer has been coupled with the vehicle. If available, you can select online routes.

ⓘ Trailer mode and online routes are not available in all countries and for all vehicles.

- Select Trailer mode.
  A prompt is shown in the multimedia system.
- Confirm the prompt.
  The arrival time at the destination takes into account a reduced driving speed with trailer.
- **To use online routes:** switch on the option.

TAKING TRAFFIC INFORMATION FOR THE ROUTE INTO ACCOUNT

- Select one of the options.

EXPLANATION OF THE OPTIONS:

- Automatic
  Traffic reports via Live Traffic Information are taken into account (⟶ page 637).
  If a new route with a shorter journey time is determined based on traffic reports, the current route is shown in blue and the new route in grey on the map. You can accept the new route by tapping on the grey line or keep the current route.
  Live Traffic Information is not available in all countries.
- Off
  No traffic reports are taken into account for the route.

CALCULATING ALTERNATIVE ROUTES

Multimedia system:

Navigation » View

- Activate Overview of route after start.

  Alternative routes are calculated for every route.

SELECTING ROUTE OPTIONS

Multimedia system:

Navigation » Route

AVOIDING OR USING ROUTE SECTIONS, E.G. MOTORWAYS OR FERRIES

- Activate or deactivate the avoid option.

  Avoid: the option is activated. The route avoids motorways, for example.

  Use: the option is deactivated. The route takes motorways into consideration, for example.

> The selected route options cannot always be taken into account. Therefore, a route may include a ferry, for instance, even though the Avoid ferries avoid option is enabled. A message then appears and you will hear a corresponding message.

AVOIDING OR USING TOLL ROADS

The use of toll roads requires a usage fee (toll).

- Select Toll roads [>].
- Activate or deactivate Avoid all.

  If the option is activated, the route avoids toll roads.

  If the option is deactivated, the route takes toll roads into account.

or

- Select an option for Payment by cash or card or Electronic billing.

  Avoid: the route avoids toll roads with the selected method of payment.

  Use: the route takes into account roads that require a toll corresponding with the payment type selected.

AVOIDING OR USING ROADS REQUIRING A SPECIAL TOLL STICKER

A vignette allows for the use of a route network for a limited time period.

- Select Avoid vignette roads [>].
- Activate or deactivate Avoid all.

or

- Switch individual countries on or off in the list.

  Avoid: the option is activated. The route avoids roads requiring a special toll sticker in the selected countries.

  Use: the option is deactivated. The route takes into account roads in the selected country which require you to pay a time-based fee (vignette).

> These route options are not available in every country.

AVOIDING OR USING AREAS WITH LOW EMISSION ZONES

> The function is available when there is an active internet connection.

- Activate or deactivate Area with low emission zones.

  Avoid: the option is activated. The route avoids all low emission zones restricted for the vehicle. These are displayed in red on the map.

Use: the option is deactivated. The restricted low emission zones for the vehicle are passed through on the route. A warning is displayed before you drive into a low emission zone.

AVOIDING AREAS

- Select Avoid areas [>] (⟶ page 645).

SELECTING NOTIFICATIONS FOR THE ROUTE

Requirements:

- **For an audible indication when approaching a personal POI:** the USB device contains personal POIs.
- The USB device is connected with the multimedia system.
- The category in which the personal POI belongs is activated.

Multimedia system:

[⌂] ▸▸ Navigation ▸▸ [⚙] ▸▸ Messages & tones

SWITCHING NAVIGATION ANNOUNCEMENTS ON OR OFF

- Activate Reduced messages.

  If a driving instruction is available for a simple change in direction, you hear a brief announcement, e.g. "Turn right in 200 m". The number of driving instructions along the route is minimised.

- Activate Detailed messages.

  If a driving instruction is available and there is a complex driving situation, you hear supplementary information, e.g. "In 200 m turn right and continue to follow the major road". Additional driving instructions are issued for the route, for example on major roads with bends.

- Activate Announce street names.

  The name of the street into which the vehicle should turn is announced.

ⓘ This option is not available in all countries and languages.

SWITCHING TRAFFIC ANNOUNCEMENTS ON OR OFF

- Activate or deactivate Announce traffic warnings.

  If available, traffic warnings are announced, e.g. before the end of traffic jams that pose a risk.

AUDIBLE INDICATION WHEN APPROACHING A PERSONAL POI

- Select Personal POIs.
- Activate a category.

  When approaching a personal POI in the selected category an audible indication will be issued.

DISPLAYING A ROUTE OVERVIEW

Requirements:

- A destination is entered.

Multimedia system:

→ Navigation



Example: route guidance is active

1. Traffic incident on the route
   Distance from current vehicle position and remaining driving time
2. Destination
3. Searches for a filling station
4. Switches traffic information display on or off

When route guidance is active, the destination and entered intermediate destinations are shown.

Depending on the route, traffic situation and available data, further information can be displayed.

The route can include up to four intermediate destinations.

- If route guidance is not active, select Previous destinations, for example.
- Select the destination and calculate the route .

THE FOLLOWING OPTIONS ARE AVAILABLE FOR ROUTE PLANNING IN THE ROUTE OVERVIEW:

- Changing the order of the destinations (→ page 627).
- Deleting a destination.
- Substituting an intermediate destination along the route.

PLANNING ROUTES

Multimedia system:

→ Navigation →

- Enter the intermediate destination (→ page 49).
  After entering the destination and new calculation of the route, the map is shown again. The route contains a new intermediate destination.

If there are already four intermediate destinations, delete an intermediate destination (→ page 627).

EDITING A ROUTE WITH INTERMEDIATE DESTINATIONS

Requirements:

- The destination and at least one intermediate destination have been entered.

Multimedia system:

→ Navigation

CHANGES THE ORDER OF THE DESTINATIONS

- In the route overview, press and hold on a destination.

- Move the destination with ◀ or ▶.
- Tap on Finished ✓.
  The editing mode is ended.

DELETING A DESTINATION

- In the route overview tap on ⊗ for a destination.

SUBSTITUTING AN INTERMEDIATE DESTINATION ALONG THE ROUTE

If an intermediate destination is entered and there are already four intermediate destinations, you will be asked to substitute one intermediate destination. A prompt appears.

- Select Yes.
- In the route overview, tap on ⊗ for the intermediate destination to be substituted.
  The new intermediate destination is added to the route.

DISPLAYING THE ROUTE LIST

Multimedia system:

→ ⌂

- Tap on the navigation window (7) (→ page 613).



Example: route list

(1) Upcoming manoeuvre with turning arrow, distance to manoeuvre, street number, street name

🔇 Switches off navigation announcements

🔈 Switches on navigation announcements

Including the following route sections on the route to the destination

(2) Current vehicle position

The route sections are displayed in the navigation window. The route list is updated during the journey.

ⓘ Motorway information shows the available service facilities. After selecting symbols, e.g. for car parks, service areas or motorway exits, the POI is adopted as an intermediate destination or destination.

- Swipe up or down.
- Select a route section.
  The map section is displayed.

SELECTING AN ALTERNATIVE ROUTE

Requirements:

- A route has already been created.

Multimedia system:

→ ⌂ ▶▶ Navigation ▶▶ Other routes

The original route is shown in the navigation window and is highlighted on the map.

Alternative routes are shown on the map together with the difference in travelling time.

ⓘ A faster route may be shown as an alternative route that is considerably longer.

THE FOLLOWING ROUTE INFORMATION IS SHOWN FOR EXAMPLE:

- Driving time
- Time of arrival
- Distance to the destination
- Avoid options based on the set route options
- Driving time saved or lost compared with the original route

► When the alternative routes have been calculated, display the route in the navigation window by swiping to the right or left.

CHANGING ROUTE TYPE

► Select Filter.

► Switching the route type on or off.

AVOIDING OR USING ROUTE OPTIONS

► Select Filter.

► Switch the route options on or off (⟶ page 625).

► Confirm the settings with Finished.

► **To start route guidance to the alternative route:** select Start.

► **To select an alternative route on the map:** touch any point on the alternative route.

The alternative route is highlighted.

ACTIVATING A COMMUTER ROUTE

Requirements:

- You have created a profile (⟶ page 569).
- The Allow destination suggestions option is switched on (⟶ page 594).
- The Commuter route option is switched on.
- The multimedia system has gathered sufficient data in order to show destination suggestions.
- Routes have been learned for these destination suggestions.
- Route guidance is active.

ⓘ This commuter route is not available in all countries.

Multimedia system:



► Activate Commuter route.

The navigation system automatically detects that the vehicle is on a commuter route.

For the daily commuter route, traffic incidents on the route are also reported when driving without active route guidance.

► **To select commuter route:** select Start.

ⓘ A commuter route is suggested even with delays on the route.

► **To delete a commuter route:** select ×.

ADJUSTING THE ROUTE ON THE MAP

Requirements:

- A route has already been created.

You can change the course of the original route on the map. A new intermediate destination is set in the process.

ⓘ If the maximum number of intermediate destinations is reached, the function is not supported. Press the OK button to confirm the message.

- ▶ Press lightly on the route with one finger and hold it in place.
  A symbol appears. The route can be changed.
- ▶ Drag and hold the route with your finger to a desired map position.
  The new route is displayed. The route is recalculated.
  When the route is calculated, the journey time and distance are compared with the original route.
  When the finger is pulled away from the display, the intermediate destination is shown on the map.
- ▶ Accept the route with Confirm or reject it with Cancel and return to the original route.

SWITCHING THE AUTOMATIC FILLING STATION SEARCH ON OR OFF

Multimedia system:

→ ⌂ ▶▶ Settings ▶▶ Vehicle

- ▶ Select Other functions.
- ▶ Activate or deactivate Automatic filling station search.
  If Automatic filling station search is switched on, a notification appears in which the search for filling stations is started.

STARTING AN AUTOMATIC FILLING STATION SEARCH

Requirements:

- The automatic filling station search is activated (⟶ page 630).

DRIVING SITUATION

The fuel level in the fuel tank reaches the reserve fuel level.

The following notification is shown on the central display: Fuel reserve Tap here to search for filling stations.

- ▶ Confirm the notification.
  The automatic filling station search begins. The available filling stations along the route or in the vicinity of the vehicle's current position are displayed.
- ▶ Select a filling station.
- ▶ Calculate the route with the filling station as an intermediate destination or as a destination (⟶ page 619).
- ▶ **If there are already four intermediate destinations:** select Yes in the prompt.
  The selected filling station is entered in the route overview at position 1. Intermediate destination 4 is deleted. Route guidance begins.

STARTING THE AUTOMATIC SERVICE STATION SEARCH

Requirements:

- ATTENTION ASSIST is activated (⟶ page 424).

- You are driving on a motorway.
- There are service stations along the route section ahead.

DRIVING SITUATION

The following notification is shown on the central display ATTENTION ASSIST Tap here to search for rest areas..

► Confirm the notification.

The service station search starts. The available service stations along the route or in the vicinity of the vehicle's current position are displayed.

► Select a service station.

► Calculate the route with the service station as an intermediate destination or as a destination (⟶ page 619).

► **If there are already four intermediate destinations:** select Yes in the prompt.

The selected service station is entered in the route overview at position 1. Intermediate destination 4 is deleted. Route guidance begins.

STARTING AND EDITING A STORED ROUTE

Requirements:

- A USB device with stored routes is connected with the multimedia system (⟶ page 698).
- The route is stored in the "Routes" folder with the GPS Exchange format (.gpx).

Multimedia system:

► Press the double arrow in the destination input line until Stored routes is displayed.

► Select Stored routes.

STARTING A SAVED ROUTE

► Select a route.

► Select Start: route guidance at start or Start: current location.

Route guidance begins.

RENAMING A ROUTE

► Press on a route until a menu is shown.

► Select Rename.

► Enter the name.

► Select OK.

RECORDING AND STORING A ROUTE

Requirements:

- A USB device is connected with the multimedia system (⟶ page 698).
- The "Routes" folder has been created on the USB device.

Multimedia system:

► Press the double arrow in the destination input line until Stored routes is displayed.

► Select Stored routes.

STARTING RECORDING

- ► Select Start recording.

  A white rectangle is displayed.

  The route is stored on the USB device.

STOPPING RECORDING

- ► Press the white rectangle.
- ► Select End recording.

Route guidance

NOTES ON ROUTE GUIDANCE

> ⚠ **WARNING**
> Risk of distraction from operating integrated communication equipment while the vehicle is in motion
>
> If you operate communication equipment integrated in the vehicle when driving, you could be distracted from the traffic situation. This could also cause you to lose control of the vehicle.
>
> - ► Only operate this equipment when the traffic situation permits.
> - ► If you cannot be sure of this, stop the vehicle whilst paying attention to road and traffic conditions and operate the equipment with the vehicle stationary.

You must observe the legal requirements for the country in which you are currently driving when operating the multimedia system.
Route guidance begins once a route has been calculated. The road and traffic rules and regulations always have priority over multimedia system driving instructions. Driving instructions are, for example navigation announcements, changes in direction and lane recommendations.

Changes in direction and lane recommendations are shown in the navigation window.

THE FOLLOWING DISPLAYS AND FUNCTIONS ARE ALSO AVAILABLE IN THE NAVIGATION WINDOW, FOR EXAMPLE:

- Route list
- Destination information
- Traffic information
- Motorway facilities
- Car park search

If you do not follow the driving instructions or if you leave the calculated route, a new route is calculated automatically.

If, for example, the route is diverted or the direction of a one-way road has been reversed, driving instructions may deviate from the actual traffic situation.

Alternatives may be offered during route guidance, e.g. before passing a motorway exit road. The additional driving time for the journey along the motorway exit is shown.

For this reason, you must always observe road and traffic rules and regulations during your journey as well as the prevailing traffic conditions.

The route can differ from the ideal route, for example in the event of roadworks or incomplete digital map data.

NOTES ON SATELLITE RECEPTION

The correct function of the navigation system depends, amongst other things, on the reception of the satellite system used. In certain situations satellite reception can be impaired, malfunction or even not be possible, e.g. in tunnels or in multi-storey car parks.

CHANGING DIRECTION OVERVIEW

CHANGES OF DIRECTION ARE SHOWN IN THE FOLLOWING DISPLAYS:

- Detailed image of the junction

  The display appears when you drive into a junction.
- 3D image

  The display appears when driving on junction-free, multi-lane roads, for example at motorway exits and motorway interchanges.



Example: detailed image of the crossing with upcoming changes of direction

1. Name of the street to turn into
2. Blue highlighted route (also on the map)
3. Current distance to the change of direction



Example: 3D image of the upcoming change of direction

1. Manoeuvre point
2. Blue highlighted route (also on the map)
3. Current vehicle position
4. Current distance to the change of direction

THERE ARE THREE PHASES WHEN CHANGING DIRECTION:

- Preparation phase

  If there is enough time between the changes of direction, the multimedia system prepares you for the upcoming change of direction. A navigation announcement is issued, e.g. "Prepare to turn right".

  The navigation window shows: the direction information or the name of the road which is to be turned into as well as the distance to the change of direction.
- Announcement phase

  The multimedia system announces the upcoming change of direction, e.g. by announcing "Turn right in 300 m".

  When the Auto zoom map orientation is switched off (⟶ page 648), a detailed representation of the junction or a 3D image of the upcoming change in direction appears in the navigation window.
- Change-of-direction phase

  The multimedia system announces the imminent change of direction, e.g. by announcing "Now turn right".

Example 3D image: when the distance to driving manoeuvre (1) is displayed with 0 m the driving manoeuvre is performed.

Changes in direction are also displayed on the driver display and head-up display.

LANE RECOMMENDATIONS OVERVIEW



Example: lane recommendations

(1) Non-recommended lane (grey arrow)
(2) Possible lane (white arrow)
(3) Recommended lane (white arrow, blue background)

This display appears for multi-lane roads.

If the digital map contains the relevant data, lane recommendations are displayed in the navigation window.

EXPLANATION OF THE DISPLAYED LANES:

- Recommended lane

  In this lane, you will be able to complete both the next change of direction and the one after that.
- Possible lane

  In this lane, you will only be able to complete the next change of direction.
- Non-recommended lane

  In this lane, you will not be able to complete the next change of direction without changing lane.

During the change of direction, new lanes may be added. Bus lanes are also shown.

Lane recommendations are also displayed on the driver's display and head-up display.

USING MOTORWAY INFORMATION

When driving on the motorway, upcoming motorway facilities and available service facilities are shown in the route list. These include car parks, service stations or motorway exits with service POIs, for example.

The entries are sorted according to increasing distance from the current vehicle position.

► Select an entry.

► If several service facilities are available, select a service facility from the list.

The destination address and the map position are shown.

► Calculate the route (⟶ page 619).

or

- Search for a POI in the vicinity.

or

- Use other functions, e.g. store the destination address of the service facility.

DESTINATION REACHED

Once the destination is reached, you will see the chequered flag. Route guidance will now be complete. The navigation menu is shown.

When an intermediate destination has been reached, you will see the intermediate destination flag with the number of your intermediate destination. Route guidance is continued.

SWITCHING NAVIGATION ANNOUNCEMENTS ON OR OFF

SWITCHING OFF

- Press the button on the steering wheel or on the MBUX multimedia system during a navigation announcement (⟶ page 576).

  The Spoken driving recommendations have been deactivated. message appears.

or

- In the route list for a driving manoeuvre select (⟶ page 628).

  The symbol changes to .

SWITCHING ON

- In the navigation window, select for an upcoming driving manoeuvre.

  The current navigation announcement is played.

  The symbol changes to .

SWITCHING NAVIGATION ANNOUNCEMENTS ON OR OFF DURING A PHONE CALL

- Press the button on the steering wheel on the right.

or

- Tap on the central display.
- Select Settings.
- Select System.
- Select Audio.
- Select Voice output.
- Activate or deactivate Driving recommendations during call.
- **To leave the menu:** select .

ADJUSTING THE VOLUME OF NAVIGATION ANNOUNCEMENTS

Multimedia system:

Settings » System » Audio » Voice output

- Select Driving recommendation vol..
- Set the volume.
- **To leave the menu:** select .

ROUTE GUIDANCE IS ACTIVE

- Set the volume during a navigation announcement on the steering wheel (⟶ page 565) or on the switch panel under the central display (⟶ page 555).

SWITCHING AUDIO FADEOUT ON OR OFF DURING NAVIGATION ANNOUNCEMENTS

- ▶ Press the [⌂] button on the steering wheel on the right.

or

- ▶ Tap [⌂] on the central display.
- ▶ Select Settings.
- ▶ Select System.
- ▶ Select Audio.
- ▶ Select Voice output.
- ▶ Activate or deactivate Audio fadeout during navigation announcements.
- ▶ **To leave the menu:** select [↩].

REPEATING NAVIGATION ANNOUNCEMENTS

Requirements

- A route has already been created.
- Route guidance is active.

Multimedia system:

→ [⌂]

- ▶ In the navigation window, select [🔊] for an upcoming driving manoeuvre.
- ▶ Select [🔇].
  The current navigation announcement is repeated.

CANCELLING ROUTE GUIDANCE

Requirements

- A route has already been created.
- Route guidance is active.

- ▶ Select [🏁] in the navigation module (⟶ page 613).

OVERVIEW OF OFF-ROAD STATUS DURING ROUTE GUIDANCE

Due to roadworks, for example, there may be differences between the data on the digital map and the actual course of the road. In such cases, the multimedia system will temporarily be unable to locate the vehicle's current position on the digital map. The vehicle is off-road.

You can see the Please follow the arrow display and hear the corresponding navigation announcement. Route guidance may be restricted.

When the vehicle is back on a road known to the multimedia system, route guidance continues as normal.

Destination

SAVING THE CURRENT VEHICLE POSITION

Multimedia system:

→ [⌂]

- ▶ When the map is shown, tap on the [▲] current vehicle position.
- ▶ Select Store position.
- ▶ **To save as a favourite:** select Save as favourite .
- ▶ **To save as "Home" address:** select Home .

- **To save as "Work" address:** select Work .

MANAGING PREVIOUS DESTINATIONS

Multimedia system:



- Select Previous destinations.

SAVING THE LAST DESTINATION AS A FAVOURITE

- Select ••• for the last destination.

  A menu appears.

- **To save as a favourite:** select Save as favourite .
- **To save as "Home" address:** select Home .
- **To save as "Work" address:** select Work .

DELETING A PREVIOUS DESTINATION

- Select ••• for the last destination.
- Select Delete.

or

- Select Delete all.
- Confirm the prompt.

EDITING DESTINATION SUGGESTIONS

Requirements:

- The Allow destination suggestions option is switched on (⟶ page 594).
- For the display of destination suggestions: the multimedia system has gathered sufficient data.

Multimedia system:



- Press and hold on a destination suggestion.

  A menu appears.

- **To cancel a destination suggestion:** select Do not suggest now or No longer suggest.
- **To save a destination suggestion:** select Save as favourite, Home or Work.

ⓘ Delete a destination suggestion from the favourites (⟶ page 618).

Route guidance with current traffic reports

TRAFFIC INFORMATION OVERVIEW

Current traffic reports are received with the Digital Extra Live Traffic Information (subscription).

ⓘ Live Traffic Information is not available in all countries.

The Digital Extra must be registered in the Mercedes-Benz user account (⟶ page 638). This ensures that the term is free of charge.

Live Traffic Information updates the traffic situation at short, regular intervals via the Internet connection.

Information on the vehicle's position is regularly sent to Mercedes-Benz AG. The data is immediately rendered anonymous by Mercedes-Benz AG and forwarded to the traffic data provider. Using this data, traffic reports relevant to

the vehicle's position are sent to the vehicle. The vehicle acts as a sensor for the flow of traffic and helps to improve the quality of the traffic reports.

ⓘ There may be differences between the traffic reports received and the actual road and traffic conditions.

IF YOU DO NOT WANT TO TRANSMIT THE VEHICLE POSITION, YOU HAVE THE FOLLOWING OPTIONS:

- You can deactivate the Digital Extra in the Mercedes-Benz user account.
- You can have the Digital Extra deactivated at a Mercedes-Benz service centre.

ⓘ Hazard warnings are received via the Car-to-X Digital Extra (⟶ page 640).

SHOWING INFORMATION FROM THE SERVICE PROVIDER FOR LIVE TRAFFIC INFORMATION

Requirements:

- The vehicle is equipped with Live Traffic Information.

Multimedia system:

⌂ » Apps » Mercedes me » My Digital Extras

► Select Live Traffic Information .

REGISTERING LIVE TRAFFIC INFORMATION

Requirements:

- You have created a Mercedes me ID.
- The vehicle is equipped with Live Traffic Information.

► Create a Mercedes me ID at: https://www.mercedes.me. A valid email address is required for this.

► Register the vehicle using the vehicle identification number (VIN).

► Link the vehicle to your Mercedes me ID.
A code is sent to the multimedia system.

► Enter the code into the multimedia system.

► Accept the general and specific terms of use.

ⓘ Alternatively, you can have the connection completed at a Mercedes-Benz service centre.

EXTENDING A LIVE TRAFFIC INFORMATION SUBSCRIPTION

Requirements:

- You have created a Mercedes me ID.
- The vehicle is linked to the Mercedes me ID and you have accepted the terms of use.
- The vehicle is equipped with Live Traffic Information.

► Visit the Mercedes-Benz website.

► Log in to your user account.

► Switch to the Mercedes-Benz Store via the user account linked to the vehicle.

- ▶ Select Live Traffic Information.
- ▶ Select the renewal period.
- ▶ Add the product to the shopping basket.
- ▶ Accept the general and specific terms of use.

  Live Traffic Information remains activated for the selected extension period. Activation begins on the date of extension.

DISPLAYING TRAFFIC INFORMATION ON THE MAP

Requirements:

- Traffic incidents and Free-flowing traffic are switched on (⟶ page 640).

Multimedia system:

→ ⌂

- ▶ If necessary, move the map (⟶ page 643).

THE MAP SHOWS THE FOLLOWING TRAFFIC INFORMATION DEPENDING ON THE ACTIVATED SETTINGS:

- Traffic incidents

  These are roadworks, road blocks and warning messages, for example.

  When route guidance is active, the symbols for traffic incidents will be shown in colour on the route. Off the route they are grey.

  - Warning messages ⚠

    Traffic safety information can be shown, e.g. if there are people on the carriageway.

    If the vehicle approaches a danger area, for example the end of a traffic jam in a dangerous position, the ⚠ symbol is shown on the map. If Announce traffic warnings is switched on and a message has been issued, an additional announcement is made.

- Traffic flow information:
  - Traffic jam (red line)
  - Slow-moving traffic (orange line)
  - Heavy traffic (yellow line)
  - Free-flowing traffic (green line)
- Display for traffic delays on the current route

  The smallest value for the display for traffic delays is a minute.

SHOWING TRAFFIC INCIDENTS ON THE ROUTE

Requirements:

- The Traffic incidents display is switched on (⟶ page 640).

Multimedia system:

→ ⌂ » Navigation

If there are traffic incidents on the route, these are shown on the map and in the route overview.

The display is along the entire route.

ⓘ The display is for route lengths up to approx. 2000 km.

ⓘ With the MBUX Voice Assistant you can inform yourself about traffic incidents on your route. Ask, for example **How is the traffic on my route?** or **How is the traffic at home?**. A voice output is issued.



Example: traffic incidents on the route

1. Total delay
2. Traffic incident symbol, e.g. [⚠] (roadworks)
3. Colour representation of traffic flow information, delay and length, road name and/or road number
4. Switches traffic information display on or off

ⓘ If a message about forming an emergency corridor has been issued, Emergency corridor is shown in the navigation window.

► To see all of the traffic incidents on the route, swipe to the right or left in the route overview.

The route section is highlighted on the map.

DISPLAYING DETAILED INFORMATION

► Tap on a traffic incident symbol or traffic flow information in the route overview (when route guidance is active) or on the map.

The detailed information is shown, for example the road section, the direction and the delay.

If a traffic jam symbol is selected, the trend can be displayed as decreasing or increasing.

► **Several pieces of traffic flow information are available in the immediate vicinity on the map:** tap on the upper line and select the traffic flow information in the list.

► **Several traffic incidents are on the map in the immediate vicinity:** tap on the top traffic incident symbol and select from the list of traffic incidents.

SWITCHING THE TRAFFIC INFORMATION DISPLAY ON

Multimedia system:

[⌂] ▸▸ Navigation ▸▸ [⚙]

► Select View.

► Traffic .

► Activate Traffic incidents and Free-flowing traffic.

Traffic incidents, for example roadworks, local area reports (e.g. fog) and warning messages, are shown on the route.

Car-to-X-Communication

CAR-TO-X-COMMUNICATION OVERVIEW

THE FOLLOWING REQUIREMENTS APPLY FOR THE DIGITAL EXTRA CAR-TO-X-COMMUNICATION:

- The vehicle is equipped with an MBUX multimedia system with navigation function.
- There is a subscription for Live Traffic Information.
- Car-to-X-Communication is activated in your Mercedes-Benz user account.

ⓘ Car-to-X-Communication is not available in all countries.

The communication module automatically establishes an Internet connection once the vehicle is switched on. If there are any hazard warnings, they will be provided shortly thereafter. Depending on the mobile phone connection, provision takes place from within a second up to about a minute.

BENEFITS OF CAR-TO-X-COMMUNICATION:

- Dangers are automatically detected by the vehicle or can be reported by the driver. These are then sent to vehicles with Car-to-X-Communication in the immediate vicinity.
- If available, current details relating to hazard spots near the vehicle's current position are received.

  This gives you sufficient time to adapt your driving style to the traffic conditions.

The use of Car-to-X-Communication requires the regular transmission of vehicle data to Mercedes-Benz AG. The data is then immediately pseudonymised by Mercedes-Benz AG. The vehicle data is deleted after an appropriate amount of time has elapsed (several weeks) and is not stored permanently.

ⓘ Data which serves as identification is replaced during the pseudonymisation process. In this way, your identity is protected against access by unauthorised third parties.

DISPLAYING HAZARD WARNINGS

Multimedia system:



If hazard warnings are available these can be shown as symbols on the map. The display depends on the settings for the Traffic incidents option.

► Set the option via (⟶ page 640).

If the option is activated, all of the symbols are shown.

If the option is deactivated, the symbols are only shown when there is a hazard warning.

THE FOLLOWING HAZARDS MAY BE SHOWN ON THE MAP:

- Accidents and breakdowns
- Slippery roads, fog, crosswinds and heavy rain
- Hazards reported manually
- Vehicle with active hazard warning light
- Roadworks
- Additional hazards (if available)

ⓘ If Announce traffic warnings is switched on (⟶ page 626), voice output can indicate a danger area.

SENDING HAZARD WARNINGS

REPORTING HAZARDS MANUALLY

ⓘ Automatically detected hazard warnings are sent by the vehicle.

- When the map is shown, tap on the current vehicle position.
  The Position menu is shown.
- Select Report traffic incident.
  The Thank you for supporting accident prevention! message appears.

Route guidance with augmented reality

OVERVIEW OF ROUTE GUIDANCE WITH AUGMENTED REALITY

WARNING
Risk of accident and injury as a result of distraction, incorrect depiction or wrong interpretation of the display

The camera image of the augmented reality display is not suitable as a guide for driving.

- Always keep an eye on the actual traffic situation.
- Avoid extended observation of the camera image.

During route guidance with augmented reality a camera image with the real traffic scene is shown on the central display before a turning manoeuvre. The camera image includes additional information, for example arrows indicating a change of direction.

If the options are switched on and this additional information is available, road names and house numbers are displayed (⟶ page 643).



1. House number
2. Street name
3. Change of direction arrow

Route guidance with augmented reality will not be available in some situations, e.g. in the event of poor satellite reception or roads that have not been digitised.

Route guidance with augmented reality is not available in all countries.

You can watch an animation on this topic via the following link:

ACTIVATING ROUTE GUIDANCE WITH AUGMENTED REALITY

WARNING
Risk of accident and injury due to imprecise positioning of additional information

The additional information from the augmented reality display may be inaccurate and is not a substitute for observing and assessing the actual driving situation.

- Always keep an eye on the actual traffic situation when carrying out all driving manoeuvres.

Multimedia system:

→ [⌂] » Navigation » [⚙]

- ► Select View.
- ► Select Augmented reality video.
- ► Activate or deactivate Augmented reality video.

  IF THE FUNCTION IS ACTIVATED, THE FOLLOWING ARE SHOWN BEFORE A TURNING MANOEUVRE IN THE CENTRAL DISPLAY:

  - The camera's video image
    The video image includes additional information.
  - The [AR] switch
    The video image can be shown or hidden.

- ► **To show or hide the video image:** tap on [AR].

SHOWING PROPERTY INFORMATION FOR ROUTE GUIDANCE WITH AUGMENTED REALITY

Requirements:

- Augmented reality is activated (⟶ page 642).

Multimedia system:

→ [⌂] » Navigation » [⚙]

- ► Select View.
- ► Select Augmented reality video.
- ► Activate Street names and House numbers.
  During route guidance, the activated options are shown as additional information in the camera image.

Map

SETTING THE MAP SCALE

Multimedia system:

→ [⌂]

ZOOMING IN

- ► When the map is shown, tap twice quickly with one finger on the central display.

or

- ► Move two fingers apart on the central display.

ZOOMING OUT

- ► Tap with two fingers on the central display.

or

- ► Move two fingers together on the central display.

ⓘ You can set the unit of measurement of the map scale (⟶ page 593).

MOVING THE MAP

Multimedia system:

→ [⌂]

- ► When the map is displayed, swipe in any direction with one finger on the central display.
- ► **To reset the map to the current vehicle position:** select [⌖] Centre .

SWITCHING THE ROUTE OVERVIEW AFTER START ON OR OFF

Multimedia system:

Navigation

- Select View.
- Activate or deactivate Overview of route after start.

  If the option is enabled, the map shows the full route after route guidance is started and, if available, all alternative routes.

SELECTING POI SYMBOLS FOR THE MAP DISPLAY

Multimedia system:

Navigation

POIs include restaurants and hotels, for example. These are displayed as symbols on the map. Not all POIs are available in all countries.

Personal POIs are destinations which you have saved on a USB device, for example.

ⓘ The display of POI symbols on the map can be activated or deactivated as a favourite.

- Select View.
- Select POI symbols on map.
- Activate or deactivate Hide all points of interest.

  When the option is switched on, all POIs are hidden on the map. The settings in the POI categories are kept.

  When the option is switched off, the POIs are shown on the map according to the settings in the POI categories.

ⓘ If the conditions are fulfilled, the POI symbols are shown with current online information (⟶ page 649).

SWITCHING DISPLAY OF CATEGORIES FOR QUICK-ACCESS ON OR OFF

- Switch a category on or off in the menu.

SELECTING CATEGORIES

- In the menu, select Other categories.
- Activate or deactivate Show all.

  When the option is switched on, the POI symbols for all categories are shown on the map.

or

- Select the categories.
- Activate or deactivate the categories.

  The POI symbols for the selected categories are shown on the map.

SELECTING PERSONAL POI CATEGORIES

- In the menu, select Personal POIs.
- Select a category.
- Activate or deactivate Display on the map.
- **To issue a signal when approaching:** activate Visual warning and Acoustic notification.

RESETTING THE POI SYMBOL DISPLAY

- In the menu, select Reset POIs.

  The settings are reset to the standard settings.

SELECTING THE DISPLAY OF ADDITIONAL INFORMATION ON THE MAP

Multimedia system:

Navigation

- Select View.
- Select Show additional information.
- Switch the options on or off.

THE FOLLOWING OPTIONS ARE AVAILABLE:

- Current street

  If the option is enabled, it will be displayed in the navigation window.
- Scale

  If the option is enabled, the map scale is permanently displayed on the map.

  The option also influences the display on the driver display.
- Altitude
- Next junction

  If the option is switched on and the journey continues without route guidance, the name of the next intersecting street will be displayed in the navigation window.

DISPLAYING THE MAP VERSION

Multimedia system:

Navigation

- Select View.
- Select Map data version.

  The detail information is displayed.

ⓘ You can update the map data with the Online Map Update Digital Extra (⟶ page 49).

ⓘ **YOU CAN OBTAIN INFORMATION ABOUT NEW VERSIONS OF THE DIGITAL MAP VIA THE FOLLOWING OPTIONS:**

- Depending on the setting, as a message in the Mercedes inbox or as an e-mail
- At any Mercedes-Benz service centre

OVERVIEW OF AREA AVOIDANCE ON THE ROUTE

You can define areas along a route that you would like to avoid.

AVOIDING A NEW AREA FOR THE ROUTE

Multimedia system:

Navigation Route Avoid areas

- Select Avoid new area.

STARTING USING THE MAP

- Select Using map.

  A red rectangle appears. This designates the area that should be avoided.
- Move the map (⟶ page 643).
- Set the map scale (⟶ page 643).
- Select OK.

  The area is entered into the list.

STARTING USING DESTINATION SEARCH

- ▶ Select Via address entry.
- ▶ Enter the address (⟶ page 49).
- ▶ Select the destination in the list.
  The map appears. The area is saved.

CHANGING AN AREA TO BE AVOIDED

Multimedia system:

Navigation ▸▸ Route ▸▸ Avoid areas

- ▶ Select an area in the list.
- ▶ Select Edit.
- ▶ **To move an area on the map:** swipe in any direction on the central display.

CHANGING THE SIZE OF THE AREA

- ▶ Move two fingers apart or together on the central display.
- ▶ Select OK.
  The area is entered into the list.

TAKING THE AREA FOR THE ROUTE INTO ACCOUNT

- ▶ Select the area in the list.
- ▶ Activate Avoid area.
  If route guidance is active, a new route is calculated.
  If there is no route yet, the setting is carried over to the next route guidance.

  THE ROUTE CAN INCLUDE AN AREA THAT IS TO BE AVOIDED IN THE FOLLOWING CASES:

  - The destination is located in an area that is to be avoided.
  - There is no practical alternative route.

DELETING AN AREA TO BE AVOIDED

Multimedia system:

Navigation ▸▸ Route ▸▸ Avoid areas

DELETING AN AREA TO BE AVOIDED

- ▶ Select an area in the list.
- ▶ Select Delete.
- ▶ Confirm the prompt with Yes.

DELETING ALL AREAS TO BE AVOIDED

- ▶ If at least two areas to be avoided are set, select Delete all.
- ▶ Confirm the prompt with Yes.

MAP DATA UPDATE OVERVIEW

As the content of a digital road map has a short life, outdated data may have a negative effect on all navigation functions. For the best MBUX navigation experience, you should install all of the map updates offered by Mercedes-Benz.

THE FOLLOWING OPTIONS ARE AVAILABLE FOR THE UPDATE OF MAP DATA:

- Online map update
- Update via the customer profile on the Mercedes-Benz website
- Update at a Mercedes-Benz service centre
  Additional costs can be incurred in this process.

ONLINE MAP UPDATE

REQUIREMENTS:

- Digital Extras are available.

- You have a Mercedes me ID.
- The Digital Extra Online Map Update is available for your region.
- The Digital Extra has been activated.

The Digital Extra Online Map Update is only available in certain countries.

Installation takes place in the background as an automatic map update.

The MBUX multimedia system installs all available map updates for the regions of Europe, North and South America, Korea, Japan, Australia/New Zealand and for other regions in which the vehicle is located or is moved.

The online map update is activated at the latest after the next time the vehicle is switched on.

UPDATES VIA THE MERCEDES-BENZ PORTAL
The map data for several regions can also be updated manually. Log in with your Mercedes me ID at: https://www.mercedes-benz.de/

Click on your account at the top right and follow the menu path My dashboard > Manage vehicle > Manage Digital Extras > Online Map Update. Select the regions to be downloaded to a storage medium.

After the map data has been copied, connect the storage medium with your vehicle. Select the notification with information about a new version of the map data and start the installation. After the MBUX multimedia system has been restarted, the updated map data is used.

OVERVIEW OF MAP DATA
If map data is reinstalled in a vehicle, no activation code needs to be entered.

For map data purchased as data media, the enclosed activation code must be entered after starting the installation.

The activation code is only ever valid for one vehicle.

IN THE EVENT OF THE FOLLOWING PROBLEMS, PLEASE CONTACT A MERCEDES-BENZ SERVICE CENTRE:

- The multimedia system does not accept the activation code.
- You have lost the activation code.

DISPLAYING THE COMPASS
Multimedia system:



► When the map is shown, tap on the current vehicle position until the Position menu is shown.

► Select Compass.

THE COMPASS DISPLAY SHOWS THE FOLLOWING INFORMATION:

- The current direction of travel with bearing (360° format) and compass direction
- Longitude and latitude coordinates in degrees, minutes and seconds
- Number of satellites from which a signal can be received

The information is not available in every country.

DISPLAYING QIBLA

Multimedia system:

→ ⌂

- ▶ When the map is shown, tap on the ⮝ current vehicle position until the Position menu is shown.
- ▶ Select Alerts.

  The arrow on the compass shows the direction to Mecca in relation to the current direction of travel.

  The number of satellites received is shown.

ⓘ This function is not available in all countries.

SETTING THE MAP SCALE AUTOMATICALLY

Multimedia system:

→ ⌂ ▶▶ Navigation ▶▶ ⚙

- ▶ Select View.
- ▶ Activate ⬬ Auto zoom.

  When the option is switched on, the map scale is set automatically depending on your driving speed and the type of road.

ⓘ The automatically selected map scale can be changed manually. After a few seconds, this is automatically reset.
When the option is activated, no detailed display of the junction or a 3D image is shown in the navigation window during an upcoming driving manoeuvre.

DISPLAYING THE SATELLITE MAP

Requirements:

- There is an Internet connection.
- Digital Extras are available.
- You have a Mercedes me ID.
- The vehicle is linked to the Mercedes me ID and you have accepted the terms of use.

  Further information can be found at: https://www.mercedes.me
- Satellite maps are available.

Multimedia system:

→ ⌂ ▶▶ Navigation ▶▶ ⚙

- ▶ Select View.
- ▶ Activate or deactivate Satellite map.

  WHEN SATELLITE MAP IS SELECTED, THEY ARE DISPLAYED AT THE FOLLOWING MAP SCALES:

  - On-board maps

    The satellite maps are displayed in map scales from 2 km.
  - Online maps

    The satellite maps are displayed in high-resolution map scales from 10 m.

  When Satellite map is not selected, no satellite maps are displayed.

ⓘ The display of satellite maps is not available in all countries.

DISPLAYING THE RANGE

Requirements:

- There is an Internet connection.
- Digital Extras are available.
- You have a Mercedes me ID.
- The vehicle is linked to the Mercedes me ID and you have accepted the terms of use.
  Further information can be found at: https://www.mercedes.me
- The Digital Extra is available and has been activated.

Multimedia system:

Navigation

▶ Select View.

▶ Range .

THE RANGE IS SHOWN ON THE MAP WITH THE FOLLOWING DISPLAYS:

- For petrol and diesel vehicles: green display
- For hybrid vehicles:
  Total range: green display
  Electrical range: blue display

When the lower reserve capacity is reached then the range display on the map is switched off.

ⓘ The range display on the map is not available in all countries.

DISPLAYING ONLINE MAP CONTENTS

Requirements:

- There is an Internet connection.
- Digital Extras are available.
- You have a Mercedes me ID.
- The vehicle is linked to the Mercedes me ID and you have accepted the terms of use.
  Further information can be found at: https://www.mercedes.me
- The Digital Extra is available and has been activated.

Multimedia system:

Navigation

▶ Select View.

▶ Switch on a Digital Extra, e.g. Weather.
  Current weather information is displayed on the navigation map, e.g. temperature or cloud cover.
  The information from the Digital Extras is not displayed in all map scales, e.g. weather symbols.

ⓘ The display of online map content is not available in all countries.

Parking service

NOTES ON THE PARKING SERVICE

NOTE
Vehicle damage due to failure to observe the maximum permissible clearance height

If the vehicle height exceeds the maximum permissible clearance height, the roof and other vehicle parts may be damaged.

- ► Please observe the indicated maximum clearance height.
- ► If the vehicle exceeds the permissible clearance height, do not drive in.
- ► Take the modified vehicle height in the case of roof superstructures or other carrier systems into account.

This service is not available in all countries.

DISPLAYING PARKING OPTIONS ON THE MAP

Requirements:

- The Navigation Services service is activated in your Mercedes-Benz user account.
- The parking service is part of the scope of the Navigation Services.

Multimedia system:

→ Home ▸▸ Navigation ▸▸ Settings

- ► Switch on Parking.

  The parking options within the vicinity of the current vehicle position are shown.

SELECTING PARKING OPTIONS

NOTE
Vehicle damage due to failure to observe local information and parking conditions

The data is based on the information provided by the respective service providers.

Mercedes-Benz does not guarantee the accuracy of the information provided in relation to the car park or parking area.

- ► Always observe the local information and conditions.

Requirements:

- The Navigation Services service is activated in your Mercedes-Benz user account.
- The parking service is part of the scope of the Navigation Services.
- Parking is activated (⟶ page 650).

Multimedia system:

→ Home

- ► Tap on P on the map.

or

- ▶ In the route overview, select [P] Parking spaces (⟶ page 626).
- ▶ Select the search position and search filter, e.g. Near destination and Multi-storey car parks.

  The map shows car parks suited to the selected settings.
- ▶ Select a parking option.

  THE FOLLOWING INFORMATION IS DISPLAYED (IF AVAILABLE):

  - Destination address, distance from current vehicle position and arrival time
  - Information on the car park, e.g.
    - Opening times
    - Parking charges
    - Current occupancy
    - Maximum parking time
    - **Maximum access height**

      The maximum access height shown by the parking service does not replace the need for observation of the actual circumstances.
  - Available payment options (Mercedes pay, coins, bank notes, cards)
  - Details on parking tariffs
  - Number of available parking spaces
  - Payment method (e.g. at parking meters)
  - Services/facilities at the parking option
  - Telephone number
- ▶ Calculate the route (⟶ page 619).

  THE FOLLOWING FUNCTIONS CAN BE USED (IF AVAILABLE):

  - Searching for POIs in the vicinity.
  - Saving the destination.
  - Placing a call at the destination.
  - Sharing the destination via the QR code.
  - Calling up an Internet address.
  - Showing the destination on the map.

PRIOR BOOKING OF A PARKING SPACE

Requirements:

- The Navigation Services service is activated in your Mercedes-Benz user account.
- The parking service is part of the scope of the Navigation Services.
- You have registered in the Mercedes-Benz Portal with Mercedes pay and the respective contract partners with your payment details for paying for parking.
- Parking is activated (⟶ page 650).

ⓘ This option is not available in all countries.

Multimedia system:



- ▶ Select a parking option on the map.
- ▶ If a parking space available to book has been selected, select Book parking space.
- ▶ Select the desired booking period. Take note of the cancellation conditions.

  If the parking space is available for the selected period, the price will be shown.

- ▶ Press OK to confirm.
- ▶ In the booking overview, confirm with Book.
- ▶ If required, enter the Mercedes me PIN.
  The parking space will be booked in the background.
  A booking confirmation including a car park ticket will be sent to your registered email address.

MAKING USE OF OR CANCELLING THE BOOKING

- ▶ Start the Mercedes me App on your smartphone.
- ▶ Open Menu.
- ▶ Select My transactions.
- ▶ Select Parking transactions.
- ▶ Select the desired booking.
- ▶ **To make use of the booking:** select Show car park ticket.

or

- ▶ **To cancel the booking:** select Cancel booking.

ⓘ If possible, a parking space booking can be cancelled up to the stated time. If a booking cannot be cancelled, this will already be shown to you during the booking procedure.

PAYING PARKING CHARGES

Requirements:

- The Navigation Services service is activated in your Mercedes-Benz user account.
- The parking service is part of the scope of the Navigation Services.
- You have registered in the Mercedes-Benz Portal with Mercedes pay and the respective contract partners with your payment details for paying for parking.
- Parking is activated (⟶ page 650).

ⓘ This option is not available in all countries.

Multimedia system:



- ▶ Select a parking option on the map.
- ▶ If a car park that can be paid for has been selected, scroll down in the parking details.
- ▶ Select Payment.
  Once the vehicle has reached a parking position with payment function and the vehicle is switched off, a message appears. Using this message you can pay from the vehicle and start the payment process.

STARTING A PAYMENT PROCEDURE

- ▶ Acknowledge the message.
- ▶ Please note the maximum parking period displayed and any existing additional limitations. If required, a message will inform you about the necessity of displaying information confirming the online payment for the parking space.
- ▶ Select Start the payment process.
- ▶ If required, enter the Mercedes me ID PIN.

- Press OK to confirm.
  The successful start of your parking transaction is shown.
- Complete the booking with OK.
- **To cancel a parking transaction:** after receiving the confirmation request, select Cancel.
  Minimum charges may be incurred.

ENDING A PARKING TRANSACTION

- Stop the active transaction via the Mercedes-Benz App.
  You receive a summary of the procedure and the costs.
  If an uncompleted parking transaction is detected for your vehicle as you continue your journey, a message will appear asking whether you would like to end it.
- Acknowledge the message.
  When the parking transaction is stopped successfully, another message appears with the details about your completed parking.

Dashcam

NOTES ON THE DASHCAM

NOTE
Risk of legal consequences due to violation of legal regulations and data protection provisions

You are legally responsible for operation and use of the dashcam functions.

The legal requirements relating to operation and use of the dashcam can vary depending on the country in which the dashcam is operated.

This function is not permitted in all countries.

- Before using the dashcam, read up on the content of the legal regulations, in particular the data protection requirements in the respective country of use.
- Observe the legal regulations, in particular the data protection requirements.

OBSERVE THE FOLLOWING INSTRUCTIONS FOR SAFE OPERATION:

- Only use FAT32 or exFAT-formatted USB storage devices.
- Use USB-IF-certified USB storage devices.
  USB-IF is a non-profit corporation and stands for USB Implementers Forum. Based on the USB specification, USB-IF certifies, for example, USB versions, corresponding cables and plugs as well as energy supply processes via the USB interface.

- USB storage devices may be damaged if often or permanently overwritten at high speed.

ⓘ The file size and therefore the duration of single recording is limited by the limitations of the USB flash drive format. For example, FAT32-formatted USB flash drives do not allow files larger than 4 GB.
When the file size is reached, the recording stops and you receive a notification.

ⓘ **THE FOLLOWING FUNCTIONS ARE AVAILABLE IN THE GALLERY APP:**

- Switching write protection on or off
- Deleting video files

Additional information about the Gallery app (⟶ page 682).

ⓘ This function may be a Digital Extra .

SELECTING A USB DEVICE FOR A VIDEO RECORDING WITH THE DASHCAM

Requirements:

- At least one USB device is connected with the multimedia system (⟶ page 698).

Multimedia system:

⟶ ⌂ » Apps » Dashcam

▶ Select the USB symbol.

▶ Select the USB device.

ⓘ When USB devices contain multiple partitions, recorded video files are not always displayed in the recording list.
Mercedes-Benz recommends that you use USB devices with one partition.

STARTING OR STOPPING A LOOP RECORDING WITH THE DASHCAM

Requirements:

- For recording and saving a video file: a USB device is connected with the multimedia system (⟶ page 698).
- The vehicle is switched on.

Multimedia system:

⟶ ⌂ » Apps » Dashcam

▶ If several USB devices are connected with the multimedia system, select a USB device (⟶ page 654).

If no USB device is selected, a selection is made automatically when recording starts.

▶ **To select recording mode:** select Loop recording.

Loop recording continuously records short video files. When the memory is full, recording is continued automatically. In doing so, the oldest video file is written over.

- **To start:** select Start recording.

  The length of the recording is shown. The Do not remove the storage medium during recording. Before removing the storage medium, eject it first. message appears. The video file is stored on the USB device.

- **To end:** select End recording.

ⓘ In some countries, geo-coordinates (longitude and latitude) are shown in the video image.
For technical reasons, the geo-coordinates may show greater inaccuracies.

A MESSAGE MAY APPEAR IN THE FOLLOWING CASES:

- The camera is not functional, the Camera unavailable message appears.

  Have the camera checked in a Mercedes-Benz service centre.
- If the country border indication has been switched on (⟶ page 656).
- If an outdoor recording is started with the camera app during a dashcam recording, the dashcam recording pauses and resumes automatically after the camera recording is finished. A notification to this effect is displayed.

STARTING OR STOPPING INDIVIDUAL RECORDINGS WITH THE DASHCAM

Requirements:

- For recording and saving a video file: a USB device is connected with the multimedia system (⟶ page 698).
- The vehicle is switched on.

Multimedia system:

Apps » Dashcam

- If several USB devices are connected with the multimedia system, select a USB device (⟶ page 654).

  If no USB device is selected, a selection is made automatically when recording starts.

- **To select recording mode:** select Individual recording.

  Individual recording stops recording when the memory limit is reached. An individual recording is automatically protected against being overwritten.

- **To start:** select Start recording.

  The length of the recording is shown. The Do not remove the storage medium during recording. Before removing the storage medium, eject it first. message appears. The video file is stored on the USB device.

- **To end:** select End recording.

ⓘ In some countries, geo-coordinates (longitude and latitude) are shown in the video image.
For technical reasons, the geo-coordinates may show greater inaccuracies.

A MESSAGE MAY APPEAR IN THE FOLLOWING CASES:

- Individual recording: the memory is full or there are only a few minutes recording time available. The video recording stops or will be stopped imminently.

  Change the USB device or delete a video file.
- The camera is not functional, the Camera unavailable message appears.

  Have the camera checked in a Mercedes-Benz service centre.

- If the country border indication has been switched on (⟶ page 656).
- If an outdoor recording is started with the camera app during a dashcam recording, the dashcam recording pauses and resumes automatically after the camera recording is finished. A notification to this effect is displayed.

CONFIGURING DASHCAM SETTINGS

Requirements:

- A USB device is connected with the multimedia system (⟶ page 698).

Multimedia system:

Apps » Dashcam

► Select ⚙.

RECEIVING NOTIFICATIONS AFTER PASSING A BORDER CROSSING

► Activate National border alert .

A message is shown if video is being recorded and the vehicle passes a border.

ⓘ This function is not available in all countries.

STARTING AUTOMATIC VIDEO RECORDING

► Select Automatic loop recording.

► Activate Automatic loop recording.

When the vehicle is started, video recording starts automatically.

ⓘ This function is not available in all countries.

Telephone

Telephony

NOTES ON TELEPHONY

WARNING
Risk of distraction from operating integrated communication equipment while the vehicle is in motion

If you operate communication equipment integrated in the vehicle when driving, you could be distracted from the traffic situation. This could also cause you to lose control of the vehicle.

- Only operate this equipment when the traffic situation permits.
- If you cannot be sure of this, stop the vehicle whilst paying attention to road and traffic conditions and operate the equipment with the vehicle stationary.

WARNING
Risk of accident from operating mobile communication equipment while the vehicle is in motion

Mobile communication devices distract the driver from the traffic situation. This can also cause the driver to lose control of the vehicle.

- As a driver, only operate mobile communication devices when the vehicle is stationary.
- As a vehicle occupant, use mobile communication devices only in the designated area, e.g. in the rear passenger compartment.

You must observe the legal requirements for the country in which you are currently driving when operating the multimedia system and mobile communication equipment in the vehicle.

WARNING
Risk of injury due to objects being stowed incorrectly

If objects in the vehicle interior are stowed incorrectly, they may slide or be thrown around and hit vehicle occupants. In addition, cup holders, open stowage spaces and mobile phone receptacles will not always be able to retain all objects that they contain in the event of an accident.

There is a risk of injury, particularly in the event of sudden braking or a sudden change in direction.

- ► Always stow objects such that they cannot be thrown around in such situations.
- ► Always make sure that objects do not protrude from stowage spaces, luggage nets or stowage nets.
- ► Close the lockable stowage spaces before starting a journey.
- ► Always stow and secure heavy, hard, pointed, sharp-edged, fragile or bulky objects in the boot/load compartment.

OBSERVE THE ADDITIONAL INFORMATION ON STOWING MOBILE COMMUNICATIONS DEVICES CORRECTLY:

- Loading the vehicle (⟶ page 256)

Further information can be obtained from a Mercedes-Benz service centre or at the https://www.mercedes-benz-mobile.com.

TELEPHONE MENU OVERVIEW



1. Bluetooth® device name of the currently connected mobile phone/of the mobile phone
2. Bluetooth® device name of the currently connected mobile phone/of the mobile phone (when several mobile phones are connected)
3. Signal strength of the mobile phone network
4. Battery status of the connected mobile phone
5. Options
6. Messages
7. Calls up devices
8. Numerical pad
9. Starts contact search

BLUETOOTH® PROFILE OVERVIEW

Bluetooth® profile of the mobile phone	Function
PBAP (**P**hone **B**ook **A**ccess **P**rofile)	Contacts are automatically displayed in the multimedia system
MAP (**M**essage **A**ccess **P**rofile)	Message functions can be used
HFP (**H**ands **F**ree **P**rofile)	Wireless telephony is available

OVERVIEW OF MOBILE PHONE USAGE

DEPENDING ON THE EQUIPMENT, UP TO FOUR MOBILE PHONES CAN BE CONNECTED AT ONCE:

- A mobile phone is connected to the multimedia system via Bluetooth® (⟶ page 659).
- Additional mobile phones are connected with the multimedia system via Bluetooth® (⟶ page 660).
  - You can use all the functions of the multimedia system with all mobile phones.

ⓘ Irrespective of this, Bluetooth® audio functionality can by used with any mobile phone (⟶ page 698).

INFORMATION ON TELEPHONY

THE FOLLOWING SITUATIONS CAN LEAD TO THE CALL BEING DISCONNECTED WHILE THE VEHICLE IS IN MOTION:

- There is insufficient network coverage in the area
- You move from one transmission/reception station to another and no communication channels are free
- The SIM card used is not compatible with the network available
- A mobile phone with "Twincard" is logged into the network with the second SIM card at the same time

The multimedia system supports calls in HD Voice® for improved speech quality. A requirement for this is that the mobile phone and the mobile phone network provider of the person you are calling support HD Voice® .

Depending on the quality of the connection, the voice quality may fluctuate.

CONNECTING A MOBILE PHONE

Requirements:

- Bluetooth® is activated on the mobile phone (see the manufacturer's operating instructions).
- Bluetooth® is activated on the multimedia system (⟶ page 589).

Multimedia system:

Phone » Devices » Devices

SEARCHING FOR A MOBILE PHONE

► Select Connect new device.

AUTHORISING A MOBILE PHONE

► Select a mobile phone.

A code is displayed in the multimedia system and on the mobile phone.

► **If the codes match:** confirm the code on the mobile phone.

When you connect an iPhone®, a prompt appears on the iPhone® asking whether notifications should be shown on the central display. If the request is confirmed on the iPhone®, all incoming calendar notifications (Appointment) on the iPhone® are first displayed as a message on the central display. In the

Notification Centre settings, you can adjust which notification category of the connected iPhone® should be displayed on the central display.

AMONG OTHERS, THE FOLLOWING IPHONE® NOTIFICATION CATEGORIES CAN BE SELECTED:

- Voicemail
- Social media
- Appointment
- E-mail
- News
- Health & Fitness
- Business & Finance
- Location
- Entertainment
- Other

Only calendar notifications (Appointment) are shown on the central display by default.

Customising notifications for iPhone® apps

► Select Apps.
A list of apps that can be selected for notifications on the central display appears.

► Select the app for which notifications should no longer be shown on the central display.

Notifications are activated for all apps by default.

ⓘ Further settings can be made in the Notification Centre (⟶ page 575).

ⓘ Up to 15 mobile phones can be authorised on the multimedia system.

ⓘ Up to four of the mobile phones activated in the driver's user profile are automatically reconnected.

ⓘ A mobile phone can be used by the driver and front passenger as a Bluetooth® audio device (⟶ page 698).

You can watch an animation on this topic via the following link:

CONNECTING AN ADDITIONAL MOBILE PHONE

Requirements:

- At least one mobile phone is already connected to the multimedia system via Bluetooth®.

Multimedia system:
Phone » Devices » Devices

► Select Connect new device.

► Select the mobile phone.

SWITCHING BETWEEN MOBILE PHONES

Multimedia system:

Phone

The connected mobile phones are shown individually in separate tabs.

- Select the tab with the desired mobile phone.

  Selecting the tab of a specific mobile phone displays the associated telephone contents.

  Selecting the other tab switches the view to the other telephone.

  The submenus in the Phone menu (e.g. contacts, call lists, messages) relate to the currently selected mobile phone with the exception of the telephone settings. In the telephone settings, settings can be made for both mobile phones.

CHANGING THE FUNCTION OF A MOBILE PHONE

Multimedia system:

Phone Devices Devices

ACTIVATING A FUNCTION

- Select the grey symbol for the required function in the line of a mobile phone.

  The corresponding function is activated.

DEACTIVATING A FUNCTION

- **One function is active:** select the coloured symbol in the line of a mobile phone.

  The mobile phone is disconnected from the multimedia system.

- **Several functions are active:** de-select an active function in the line of one of the mobile phones.

  The corresponding function is deactivated.

DELETING A MOBILE PHONE

Multimedia system:

Phone Devices

- Select Devices.
- Select [•••] in the line of the mobile phone.
- Select Delete device.

  The mobile phone is deleted from the system.

STARTING OR STOPPING MOBILE PHONE VOICE RECOGNITION

Requirements

- At least one mobile phone is connected to the multimedia system (⟶ page 659).
- The tab with the mobile phone for which voice recognition should be started is selected (⟶ page 661).

STARTING MOBILE PHONE VOICE RECOGNITION

- Press and hold the button on the multifunction steering wheel for more than one second.

  Voice recognition is started for the currently selected mobile phone.

STOPPING MOBILE PHONE VOICE RECOGNITION

- Press the or button on the multifunction steering wheel.

ⓘ If a mobile phone is connected via Smartphone Integration, the voice recognition of this mobile phone is always started or stopped.

NOTE ABOUT CONTACT SUGGESTIONS

The multimedia system can show contact suggestions based on frequently used contacts, outgoing calls and text messages. For this, the Allow contact suggestions option must be switched on (⟶ page 594).

When you open the call list or the message menu, contacts which you can call or write to will be suggested to you. Suggestions will be shown in the Suggestionstab.

ⓘ The multimedia system does not use the content of messages for suggestions.

SELECTING OPTIONS FOR CONTACT SUGGESTIONS

Requirements:

- The Allow contact suggestions option is switched on (⟶ page 594).
- The multimedia system has gathered sufficient data in order to show contact suggestions.

Multimedia system:

Phone

► Select Call list or Contacts.

► Select Suggestions.

► Select ••• in the line of the suggested contact.

THE FOLLOWING OPTION IS AVAILABLE FOR SELECTION:

- Do not suggest now

Calls

TELEPHONE OPERATION

Multimedia system:

Phone

MAKING A CALL BY ENTERING NUMBERS

► Select .

► Enter a number.

► Select .

The call is made.

ACCEPTING A CALL

► Select Accept .

REJECTING A CALL

► Select Reject .

ANSWERING A CALL WITH A MESSAGE

► Select Message.

ENDING A CALL

► Select .

ACTIVATING FUNCTIONS DURING A CALL

THE FOLLOWING FUNCTIONS ARE AVAILABLE DURING A CALL:

- End call
- Micro. off
- Keypad (show to send DTMF tones)
- Add call
- Hands-free

Transfer the call, e.g. to Front, Rear or All seats.

- Private mode
  Transfer the call to the telephone or headphones, for example.

► Select a function.

ⓘ Observe that the functions and symbols can vary depending on the vehicle equipment.

CONDUCTING CALLS WITH SEVERAL PARTICIPANTS

Requirements:

- There is an active call (⟶ page 662).
- Another call is being made.

SWITCHING BETWEEN CALLS

► Select the contact.
The selected call is active. The other call is on hold.

ACTIVATING A CALL ON HOLD

► Select the contact of the call on hold.

CONDUCTING A CONFERENCE CALL

► Select Conference.
The new participant is included in the conference call.

ENDING AN ACTIVE CALL

► Select End call.

ⓘ On some mobile phones, the call on hold is activated as soon as the active call is ended.

ACCEPTING OR REJECTING A WAITING CALL

Requirements:

- There is an active call (⟶ page 662).

If you receive a call while already in a call, a message is displayed.

Depending on the mobile phone and mobile phone network provider you will hear a call waiting signal.

If several mobile phones are connected, you will hear an acoustic signal when the call goes through to the other (not yet active) mobile phone.

► Select Accept.
The incoming call is active.
If only one mobile phone is connected with the multimedia system, the previous call will be put on hold.
If several mobile phones are connected and during a call you accept a call with the other mobile phone then the existing call is ended.

or

► Select Message.
The incoming call is not accepted.
You answer with a message.

or

► Select Reject.

The function and the behaviour depend on your mobile phone network provider as well as on the mobile phone (see the manufacturer's operating instructions).

Contacts

INFORMATION ABOUT THE CONTACTS MENU
The contacts menu contains all contacts from existing data sources, e.g. a mobile phone or data storage medium.

DEPENDING ON THE DATA SOURCE, IT IS POSSIBLE TO SAVE/LOAD THE FOLLOWING NUMBER OF CONTACTS:

- Permanently saved contacts: 3,000 entries
- Contacts loaded from the mobile phone: 5,000 entries per mobile phone

FROM THE CONTACTS MENU, YOU CAN PERFORM THE FOLLOWING ACTIONS:

- Make a call, for example call a contact (⟶ page 665)
- Navigation (⟶ page 618)
- Compose messages (⟶ page 667)
- Additional options (⟶ page 665)

Mobile phone contacts are automatically displayed when a mobile phone is connected to the multimedia system (⟶ page 659).

DOWNLOADING MOBILE PHONE FAVOURITE CONTACTS
If the mobile phone supports the function, the favourites of the mobile phone are automatically loaded and appear in the overview of the phone menu.

CALLING UP CONTACTS
Multimedia system:
Phone » Contacts

THE FOLLOWING OPTIONS CAN BE USED TO SEARCH FOR CONTACTS:

- Searching by initials
- Searching by name
- Searching by phone number

▶ Enter characters into the search field.

▶ Select the contact.

A CONTACT CAN CONTAIN THE FOLLOWING DETAILS:

- Phone numbers
- Navigation addresses
- Internet address
- Email addresses
- Relationship (if set)

MANAGING THE FORMAT OF A CONTACT'S NAME
Multimedia system:
Phone »

▶ Select Name format.
▶ Select an option.

SAVING A MOBILE PHONE CONTACT
Multimedia system:
Phone » Contacts

▶ Select [>] in the line of the mobile phone contact.

- ▶ Select [•••].
- ▶ Select Save.
- ▶ Select Yes.

  The contact saved in the multimedia system is identified by the MBUX symbol.

CALLING A CONTACT

Multimedia system:

→ [⌂] ⏩ Phone ⏩ Contacts

- ▶ Select [🔍] Search contacts.
- ▶ Enter characters into the search field.
- ▶ Select the contact.
- ▶ Select the telephone number.

  The number is dialled.

SELECTING FURTHER OPTIONS IN THE CONTACTS MENU

Multimedia system:

→ [⌂] ⏩ Phone ⏩ Contacts

- ▶ Select [›] in the line of the contact.
- ▶ Select [•••].
- ▶ Select an option.

DELETING CONTACTS

Requirements:

- The contacts are saved in the vehicle.
- To delete an individual contact, this has been imported manually into the vehicle.

Multimedia system:

→ [⌂] ⏩ Phone

DELETING ALL CONTACTS

- ▶ Select [⚙].
- ▶ Select Contacts.
- ▶ Select Delete all MBUX contacts.
- ▶ Select an option.

DELETING A CONTACT

- ▶ Select Contacts.
- ▶ Select [›] in the line of the contact.
- ▶ Select [•••].
- ▶ Select Delete contact.
- ▶ Select Yes.

Call list

OVERVIEW OF THE CALL LIST

Depending on whether your mobile phone supports the Bluetooth® PBAP profile or not, the form and function of the call list differs as follows.

IF THE PBAP BLUETOOTH® PROFILE IS SUPPORTED, THE EFFECTS ARE AS FOLLOWS:

- The call lists from the mobile phone are displayed in the multimedia system.
- When connecting the mobile phone, you may have to confirm the connection for the PBAP Bluetooth® profile.

IF THE PBAP BLUETOOTH® PROFILE IS NOT SUPPORTED, THE EFFECTS ARE AS FOLLOWS:

- The multimedia system generates a call list independently as soon as calls are made in the vehicle.
- The call list is not synchronised with the call lists in the mobile phone.

MAKING A CALL FROM THE CALL LIST

Multimedia system:

Phone

- Select Call list.
- Select an entry.
  The call is made.

SELECTING ADDITIONAL OPTIONS IN THE CALL LIST

Multimedia system:

Phone

- Select Call list.
- For contacts that are in the address book: select options.
  The contact details are called up.
- For contacts where only one number is shown (not in the address book): select .

DELETING THE CALL LIST

Multimedia system:

Phone >> <Device name> >> Devices

- Select Delete call list.
- Select Yes.

This function is only available if your mobile does not support the PBAP Bluetooth® profile.

Text messages

OVERVIEW OF MESSAGE FUNCTIONS

In the message menu you can receive text messages and Apple iMessages and create and send them with the help of the MBUX Voice Assistant.

If the connected mobile phone supports the Bluetooth® MAP profile, the message function can be used on the multimedia system.

You can obtain further information about settings and supported functions of Bluetooth®-capable mobile phones at a Mercedes-Benz service centre or at: https://www.mercedes-benz-mobile.com/.

Some mobile phones require further settings after being connected to the multimedia system to activate the messaging functionality (see manufacturer's operating instructions).

SETTING MESSAGE DISPLAYS

Multimedia system:

Phone >> <Device name> >> Devices

- Select Message display.

► Select On or Off.

READING MESSAGES

Multimedia system:

→ Phone » <device name> »

USING THE READ-ALOUD FUNCTION

A message list is shown.

► To read aloud, select the symbol at a conversation.

The message is read aloud.

CREATING AND SENDING A NEW MESSAGE

Requirements

- There is an Internet connection.

Multimedia system:

→ Phone » <Device name> »

► Using the MBUX voice assistant, speak the voice command Send a message to, and name the desired contact (→ page 545).

DICTATING TEXT

► Say the message.

You are guided by the voice dialogue.

REPLYING TO A MESSAGE IN THE MESSAGING HISTORY

Multimedia system:

→ Phone » <device name> »

A message list is shown.

► Select [>] next to a contact.

The messaging history with this contact is shown. You will be guided through the steps with the help of a voice dialogue.

► Select [mic].

The dictation function is started.

► Say the message.

After the voice message has been processed, it is shown as text.

► Select Send or speak in the dialogue.

FORWARDING MESSAGES

Multimedia system:

→ Phone » <Device name> »

A message list is shown.

► Speak the voice command Forward message.

You are guided by the voice dialogue.

CALLING A MESSAGE SENDER

Multimedia system:

→ Phone » <device name> »

A message list is shown.

► Select [>] next to a contact.

The messaging history with this contact is shown.

► Select [•••].

► Select Call.

USING TELEPHONE NUMBERS, URLS OR EMAIL ADDRESSES FROM A TEXT MESSAGE

Requirements

- An Internet connection is available to call up a URL.

Multimedia system:
Phone >> <Device name> >>
A message list is shown.

- ▶ Select [>] next to a contact.
  The messaging history with this contact is shown.
- ▶ Select a telephone number or a URL in the message.
  If a URL is selected the web browser opens.
  IF A TELEPHONE NUMBER IS SELECTED THE FOLLOWING OPTIONS ARE AVAILABLE:
  - Call
  - New message
- ▶ Select an option.

DELETING A MESSAGE

Multimedia system:
Phone >> <Device name> >>
A message list is shown.

- ▶ Select a contact.
- ▶ Press and hold on a message.
- ▶ **To delete the message:** select Delete.

Apple CarPlay®

OVERVIEW OF APPLE CARPLAY®

WARNING
Risk of distraction from information systems and communications equipment

If you operate information systems and communication devices integrated in the vehicle when driving, you could be distracted from the traffic situation. This could also cause you to lose control of the vehicle.

- ▶ Only operate this equipment when the traffic situation permits.
- ▶ If you cannot be sure of this, stop the vehicle whilst paying attention to road and traffic conditions and operate the equipment with the vehicle stationary.

You must observe the legal requirements for the country in which you are currently driving when operating the multimedia system.
iPhone® functions can be used via the multimedia system using Apple CarPlay®. They are operated using the touchscreen, Touch Control or Siri® voice control. You can activate voice control by pressing and holding the [] button on the multifunction steering wheel.

By briefly pressing the [] button on the multifunction steering wheel you can continue to operate the multimedia system using the MBUX Voice Assistant (→ page 545).

Only one iPhone® at a time can be connected via Apple CarPlay® with the multimedia system.

As access to the iPhone® is restricted by MBUX when a CarPlay® session is active, not all MBUX functions (e.g. dialling from the address book) can be fully provided for the connected device. In this case use Apple CarPlay®.

The full range of functions for Apple CarPlay® is only available with an Internet connection.

The availability of Apple CarPlay® may vary according to the country.

The service provider is responsible for this application and the services and content connected to it.

Apple CarPlay® is a registered trademark of Apple Inc.

You can watch an animation on this topic via the following link:

INFORMATION ON APPLE CARPLAY®

The Apple CarPlay® symbol in the status line changes from the multimedia system to the last display within Apple CarPlay®.

If route guidance is already active on the multimedia system, it is ended when route guidance is started on the mobile phone.

CONNECTING AN IPHONE® VIA APPLE CARPLAY® (CABLE)

Requirements

- The current version of your device's operating system is being used (see the manufacturer's operating instructions).

ⓘ For safety reasons, the first activation of Apple CarPlay® on the multimedia system must be carried out when the vehicle is stationary and the parking brake applied.

- ▶ Connect the iPhone® to a USB port on the multimedia system using a suitable cable (⟶ page 698).

  When the iPhone® is connected for the first time, a message about data protection regulations appears.
- ▶ Select Accept & start if the application should be started.

or

- ▶ Open the device manager (⟶ page 660).
- ▶ Start Apple CarPlay® using the relevant symbol next to the device name.

ⓘ If applicable, a message about data protection regulations appears.

- ▶ If required confirm the use of Apple CarPlay® on your iPhone®.

EXITING APPLE CARPLAY®

- ▶ Select [⌂].

or

- ▶ Press the [⌂] button on the Touch Control (MBUX multimedia system).

ⓘ If Apple CarPlay® was not displayed in the foreground before disconnecting, the application starts in the background when reconnected. You can call up Apple CarPlay® using the Apple CarPlay® symbol in the status line.

CONNECTING AN IPHONE® VIA APPLE CARPLAY® (WIRELESS)

Requirements:

- The current version of your device's operating system is being used (see the manufacturer's operating instructions).
- Bluetooth® is activated on the device (see the manufacturer's operating instructions).
- The device is "visible" for other devices.

ⓘ For safety reasons, the first activation of Apple CarPlay® on the multimedia system must be carried out when the vehicle is stationary and the parking brake applied.

Multimedia system:

Phone » Devices

▶ Connect the mobile phone using Bluetooth® (⟶ page 659).

▶ When the iPhone® is connected with the multimedia system for the first time, the use of Apple CarPlay® must be confirmed on the iPhone®.

A message appears on the multimedia system about the data protection regulations.

▶ Select OK, start Apple CarPlay if the application should be started.

ⓘ It is possible at any time to switch between a connection via Bluetooth® or Apple CarPlay® (wireless) in the device list.

ⓘ If you have already connected a mobile phone via Bluetooth®, you can connect another iPhone® via Bluetooth® to use Apple CarPlay® via the device manager.

EXITING APPLE CARPLAY®

▶ Select [⌂].

or

▶ Press the [⌂] button on the Touch Control (MBUX multimedia system).

ⓘ If Apple CarPlay® was not displayed in the foreground before disconnecting, the application starts in the background when reconnected. You can call up Apple CarPlay® using the Apple CarPlay® symbol in the status line.

CALLING UP APPLE CARPLAY® SOUND SETTINGS

Multimedia system:

Settings » System » Audio

▶ Select the sound settings.

ENDING APPLE CARPLAY®

▶ Select the Apple CarPlay® symbol in the device manager (telephone, media) that is next to the device name of the iPhone®.

ⓘ Select the Apple CarPlay® symbol in the device manager in the telephone or media applications if Apple CarPlay® should be restarted.

Android Auto

ANDROID AUTO OVERVIEW

WARNING
Risk of distraction from information systems and communications equipment

If you operate information systems and communication devices integrated in the vehicle when driving, you could be distracted from the traffic situation. This could also cause you to lose control of the vehicle.

- Only operate this equipment when the traffic situation permits.
- If you cannot be sure of this, stop the vehicle whilst paying attention to road and traffic conditions and operate the equipment with the vehicle stationary.

You must observe the legal requirements for the country in which you are currently driving when operating the multimedia system.
Mobile phone functions can be used with Android Auto using the Android operating system on the multimedia system. They are operated using the touchscreen, Touch Control or voice control. You can activate the voice control system by pressing and holding the button on the multifunction steering wheel.

By briefly pressing the button on the multifunction steering wheel you can continue to operate the multimedia system using the MBUX Voice Assistant (⟶ page 545).

Only one mobile phone at a time can be connected via Android Auto with the multimedia system.

The full range of functions for Android Auto is only possible with an Internet connection.

The availability of Android Auto and Android Auto apps may vary according to the country.

The service provider is responsible for this application and the services and content connected to it.

You can watch an animation on this topic via the following link:

INFORMATION ON ANDROID AUTO

The Android Auto symbol in the status line changes from the multimedia system to the last display within Android Auto.

If route guidance is already active on the multimedia system, it is ended when route guidance is started on the mobile phone.

CONNECTING A MOBILE PHONE VIA ANDROID AUTO (WIRED)

Requirements

- The mobile phone supports Android Auto from Android 5.0.
- The current version of the Android Auto app is installed on the mobile phone.
- In order to use the telephone functions, the mobile phone must be connected to the multimedia system via Bluetooth® (⟶ page 659).

  If there was no prior Internet connection, this is established with the use of the mobile phone with Android Auto.

For safety reasons, the first activation of Android Auto on the multimedia system must be carried out when the vehicle is stationary with the parking brake.

- Connect the mobile phone to a USB port on the multimedia system using a suitable cable (⟶ page 698).

  When the smartphone is connected for the first time, a message about data protection regulations appears.

- Select Accept & start if the application should be started.

or

- Open the device manager (⟶ page 660).
- Start Android Auto using the relevant symbol next to the device name.

EXITING ANDROID AUTO

- Select [⌂].

or

- Press the [⌂] button on the Touch Control (MBUX multimedia system).

ⓘ If Android Auto was not displayed in the foreground before disconnecting, the application starts in the background when reconnected. You can call up Android Auto using the Android Auto symbol in the status line.

CONNECTING A MOBILE PHONE VIA ANDROID AUTO (WIRELESS)

Requirements

- The current version of your device's operating system is being used (see the manufacturer's operating instructions).
- The device supports the Android Auto function (wireless).
- Bluetooth® is activated on the device (see the manufacturer's operating instructions).
- The device is "visible" for other devices.
- Bluetooth® is activated on the multimedia system (⟶ page 589).

ⓘ For safety reasons, the first activation of Android Auto on the multimedia system must be carried out when the vehicle is stationary with the parking brake.

ⓘ The Android Auto function (wireless) is not available in all countries.

Multimedia system:

⌂ ⏩ Phone ⏩ ⚙ ⏩ Devices

- Connect the mobile phone using Bluetooth® (⟶ page 659).

  A message appears on the multimedia system about the data protection regulations.

  Depending on the end device, it may take several seconds until the message about data protection regulations appears.

- Select Accept & start.

ⓘ It is possible at any time to switch between connection via Bluetooth® or Android Auto (wireless) in the device list.

ⓘ If you have already connected a mobile phone via Bluetooth®, you can connect additional mobile phones via Bluetooth® to use Android Auto via the device manager.

EXITING ANDROID AUTO

- Select [⌂].

or

- Press the [⌂] button on the Touch Control (MBUX multimedia system).

ⓘ If Android Auto was not displayed in the foreground before disconnecting, the application starts in the background when reconnected. You can call up Android Auto using the Android Auto symbol in the status line.

CALLING UP THE ANDROID AUTO SOUND SETTINGS

Multimedia system:

[⌂] ▸▸ Settings ▸▸ System ▸▸ Audio

- Select the sound settings.

ENDING ANDROID AUTO

- Select the Android Auto symbol in the device manager (telephone, media) that is next to the device name of the mobile phone.

ⓘ Select the Android Auto symbol in the device manager if Android Auto should be restarted.

Transferred vehicle data with Android Auto and Apple CarPlay®

OVERVIEW OF TRANSFERRED VEHICLE DATA

When using Smartphone Integration, certain vehicle data is transferred to the mobile phone. This enables you to get the best out of selected mobile phone services. Vehicle data is not directly accessible.

THE FOLLOWING SYSTEM INFORMATION IS TRANSMITTED:

- Software release of the multimedia system
- System ID (anonymised)

The transfer of this data is used to optimize communication between the vehicle and the mobile phone.

To do this, and to assign several vehicles to the mobile phone, a vehicle identifier is randomly generated.

This has no connection to the vehicle identification number (VIN) and is deleted when the multimedia system is reset (⟶ page 597).

THE FOLLOWING DRIVING STATUS DATA IS TRANSMITTED:

- Transmission position engaged
- Distinction between parked, standstill, rolling and driving
- Day/night mode of the driver display
- Drive type
- Vehicle temperature
- Charging cable connector

The transfer of this data is used to alter how content is displayed to correspond to the driving situation.

THE FOLLOWING POSITION DATA IS TRANSMITTED:

- Coordinates
- Speed
- Compass direction
- Acceleration direction
- Height

This data is used by the mobile phone to improve the accuracy of the navigation (e.g. for continuation in a tunnel).

Mercedes-Benz Support Calls

MAKING A CALL VIA THE OVERHEAD CONTROL PANEL

ⓘ Mercedes-Benz Support Calls are not possible in every country. Find out at a Mercedes-Benz service centre if these functions are available in your country.

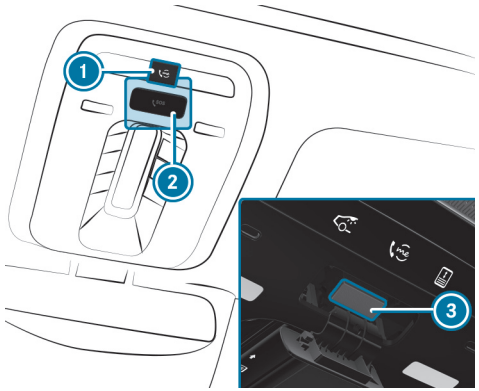

① me button for Mercedes-Benz Support Call
② SOS button cover
③ SOS button (emergency call system)

Making a Mercedes-Benz Support Call

► Press me button ①.

MAKING AN EMERGENCY CALL

► To open the cover of SOS button ② , press it briefly.

► Press and hold SOS button ③ for at least one second.

If a Mercedes-Benz Support Call is active, an emergency call can still be triggered. This has priority over all other active calls.

INFORMATION ON THE MERCEDES-BENZ SUPPORT CALL VIA THE ME BUTTON

A call was made via the me button to Mercedes-Benz Support via the overhead control panel or the multimedia system (⟶ page 674).

USING THE VOICE DIALOGUE SYSTEM YOU ACCESS THE DESIRED SERVICE:

- Accident and Breakdown Management
- Mercedes-Benz Support for general information about the vehicle

YOU CAN FIND INFORMATION ON THE FOLLOWING TOPICS:

- Activation of Digital Extras
- Operating the vehicle
- Nearest Mercedes-Benz service centre
- Further products from Mercedes-Benz

Data is transferred during the connection to Mercedes-Benz Support (⟶ page 677).

CALLING MERCEDES-BENZ SUPPORT USING THE MULTIMEDIA SYSTEM

Requirements:

- Access to a mobile phone network is available.
- Sufficient network coverage is provided by the mobile phone network providers in the respective region.
- For automatic transmission of vehicle data: the vehicle is switched on.

Multimedia system:

Phone

► Call Mercedes-Benz Support.

- After confirmation, the multimedia system sends the required vehicle data. The data transfer is shown in the display.

► Select a service via the voice dialogue system.

You will be put in touch with a contact person at Mercedes-Benz Support.

THE FOLLOWING SELECTIONS MAY BE AVAILABLE:

- Accident and Breakdown Management
- Workshop service
- Mercedes-Benz Support for general information about the vehicle

ⓘ The availability of the individual selection options is country-dependent.

CALLING MERCEDES-BENZ SUPPORT AFTER AUTOMATIC ACCIDENT/BREAKDOWN DETECTION

Requirements:

The vehicle can detect accident or breakdown situations under certain circumstances.

Accident: no requirements.

Breakdown:

- The vehicle is stationary.
- The hazard warning lights are switched on.

Additional requirements may apply for collision detection with a parked vehicle (⟶ page 410).

ⓘ This function is not available in all countries.

ACCIDENT/BREAKDOWN DETECTION PROCEDURE

- The vehicle has detected an accident or breakdown situation (⟶ page 410).
- In the event an accident or breakdown is detected, the emergency guide shows safety notes in the multimedia system display. This may take a few seconds.

  Depending on the severity of the accident, an automatic emergency call can be initiated. This has priority over all other active calls (⟶ page 685).

► Exit the emergency guide display.

A prompt appears asking whether you would like to receive support from Mercedes-Benz Support.

► **Assistance from Mercedes-Benz Support immediately after the breakdown or accident has been recognised:** select Call.

- The vehicle data is transferred automatically after your consent or if the "Breakdown Management" Digital Extra is activated (⟶ page 679).
- Mercedes-Benz Support will take your call and organise accident/breakdown assistance.

You may be charged for these services.

► **Support from Mercedes-Benz Support at a later time:** select Call later.

The message will disappear and reappear at a later time.

Additional prompt when the "Guard 360" Digital Extra is active: if the "Guard 360" Digital Extra is active, a message may appear in the multimedia system when the vehicle is switched on after a collision is detected, indicating the affected area and the severity of the impact.

► **Support from Mercedes-Benz Support directly after collision detection:** select Call.

► **No support from Mercedes-Benz Support required:** reject the prompt.

EMERGENCY GUIDE

Depending on the type and severity of the accident or a breakdown, the emergency guide can show safety notes in the central display.

AUTOMATIC ACTIVATION OF THE EMERGENCY GUIDE IS POSSIBLE DEPENDING ON THE SITUATION WHEN:

- The restraint system was triggered
- An emergency call was made via the vehicle interface
- Certain breakdown situations have occurred

THE SAFETY NOTES INCLUDE FOR EXAMPLE:

- Recommended actions when leaving the vehicle
- Procedure for safely removing seat belts in the event of an accident whereby the vehicle comes to rest on its roof

ⓘ The availability as well as the scope of the emergency guide can vary depending in the country and vehicle equipment.

ARRANGING A SERVICE APPOINTMENT VIA A MERCEDES-BENZ SUPPORT CALL

If you have activated the Digital Extra Maintenance Management, relevant vehicle data is automatically transferred to Mercedes-Benz Support. You will

then receive individual recommendations regarding the maintenance of your vehicle.

Regardless of whether you have consented to the maintenance management service, the multimedia system reminds you after a certain amount of time that a service is due. A prompt appears asking if you would like to make an appointment.

► **To arrange a service appointment:** select Call.

The vehicle data will be transferred after your approval and Mercedes-Benz Support will accept your appointment request. The information is then sent to your desired service outlet.

This will contact you to confirm the appointment and if necessary consult about the details.

ⓘ If you select Call later after the service message appears, the message is hidden and reappears at a later time.

CONSENTING TO DATA TRANSFER FOR A MERCEDES-BENZ SUPPORT CALL

Requirements:

- There is an active Mercedes-Benz Support call via the multimedia system or the me button in the overhead control panel (⟶ page 674).

ⓘ The prompt to confirm data transfer does not appear in all countries.

If the Accident/Breakdown Management Digital Extras are not activated, a prompt appears to confirm the data transfer.

► Select Yes.

- The relevant vehicle data is sent automatically (⟶ page 677).

or

► Select No and confirm.

- Only call control data is transmitted (⟶ page 677).

More information on Digital Extras: https://www.mercedes.me

DATA TRANSMITTED DURING A MERCEDES-BENZ SUPPORT CALL

If you initiate Mercedes-Benz Support Call, data is transferred to enable targeted advice and an efficient service.

THE FOLLOWING REQUIREMENTS MUST BE FULFILLED FOR THE TRANSFER OF THE DATA:

- The vehicle is switched on.
- The required data transfer technology is supported by the mobile phone network provider.
- The quality of the mobile connection is sufficient.

MULTI-STAGE TRANSFER DEPENDS ON THE FOLLOWING FACTORS:

- Reason for the initiation of the call
- The available mobile phone transmission technology
- Activated Digital Extras
- The service selected in the voice control system

ⓘ A prompt for consent to data transmission is only made if the corresponding Digital Extra has not been activated.

The scope of the transmitted data depends on the vehicle model and its equipment. For technical reasons, not all data is available at all times.

DATA TRANSMISSION WHEN DIGITAL EXTRAS ARE NOT ACTIVATED

IF NO DIGITAL EXTRAS ARE ACTIVATED AND THE DATA PROTECTION PROMPT HAS BEEN CONFIRMED, THE FOLLOWING DATA ARE TRANSMITTED:

- Vehicle identification number
- Time of the call
- Reason for the initiation of the call
- Confirmation of the data protection prompt
- Country indicator of the vehicle
- Set language for the multimedia system
- Telephone number of the communication platform installed in the vehicle

IF A CALL IS MADE FOR A SERVICE APPOINTMENT VIA THE SERVICE REMINDER, THE FOLLOWING DATA IS ALSO TRANSMITTED:

- Current mileage and maintenance data

IF A CALL IS MADE AFTER AUTOMATIC ACCIDENT OR BREAKDOWN DETECTION USING THE MULTIMEDIA SYSTEM, THE FOLLOWING DATA IS ALSO TRANSMITTED:

- Current mileage and maintenance data
- Current vehicle location

IF THE ACCIDENT AND BREAKDOWN MANAGEMENT SELECTION HAS BEEN MADE VIA THE VOICE DIALOGUE SYSTEM AND NO DIGITAL EXTRA HAS BEEN ACTIVATED, BUT THE DATA PROTECTION PROMPT HAS BEEN CONFIRMED, THE FOLLOWING DATA CAN BE ADDITIONALLY REQUESTED FROM THE VEHICLE BY MERCEDES-BENZ SUPPORT:

- Current vehicle location

IF THE DATA PROTECTION PROMPT HAS BEEN REJECTED, THE FOLLOWING DATA IS TRANSMITTED TO ENABLE TARGETED ADVICE AND AN EFFICIENT SERVICE:

- Time of the call
- Reason for the initiation of the call
- Rejection of the data protection prompt
- Country indicator of the vehicle
- Set language for the multimedia system
- Telephone number of the communication platform installed in the vehicle

DATA TRANSMISSION WHEN DIGITAL EXTRAS ARE ACTIVATED

Only in the second step and only for the respective activated Digital Extras, further case-specific data is transmitted in order to enable an optimal service.

An overview of the data transferred is contained in the data protection notes for the Digital Extras. You can find these in your Mercedes-Benz user account.

DATA PROCESSING

The data transmitted as part of the call will be deleted from the transmitting systems once the call has been completed, provided they are not used for other activated Digital Extras.

The incident-specific data is processed and stored by Mercedes-Benz Support and, if required to process the incident, forwarded to the service partner

authorised by Mercedes-Benz Support. Please observe the data protection note on the Mercedes-Benz website at https://me.secure.mercedes-benz.com or in the announcement immediately after a call to Mercedes-Benz Support is connected.

ⓘ The recorded message is not available in every country.

Call options via Digital Extras

INFORMATION ON DIGITAL EXTRAS WITH CALL FUNCTION

ⓘ Individual Digital Extras or certain packages are not available in every country. Find out at a Mercedes-Benz service centre if these functions are available in your country.

YOU CAN USE THE FOLLOWING DIGITAL EXTRAS WITH CALL FUNCTION VIA THE MULTIMEDIA SYSTEM AND THE OVERHEAD CONTROL PANEL, FOR EXAMPLE:

- Accident Recovery (me button or the situation-dependent display in the multimedia system)
- Breakdown Management (me button or the situation-dependent display in the multimedia system)
- Mercedes-Benz emergency call system (automatic emergency call and SOS button)

The Digital Extras Accident and Breakdown Management and the Mercedes-Benz emergency call system are available to you around the clock.

The me button and the SOS button can be found on the vehicle's overhead control panel (⟶ page 674).

You can also call Mercedes-Benz Support via the multimedia system (⟶ page 675).

Please note that calling via Digital Extras is a Mercedes-Benz service. In an emergency, use the emergency call system in the vehicle (⟶ page 81) or contact the standard national emergency numbers.

Please note the terms of use and the data protection notes for Digital Extras. You can find these in your Mercedes-Benz user account.

ACCIDENT AND BREAKDOWN MANAGEMENT DIGITAL EXTRAS

ⓘ The Accident and Breakdown Management Digital Extras are not available in every country. Contact a Mercedes-Benz service centre to find out whether this function is available in your country.

THE ACCIDENT AND BREAKDOWN MANAGEMENT CAN INCLUDE THE FOLLOWING FUNCTIONS:

- Supplement to the Mercedes-Benz emergency call system (⟶ page 81)

  If necessary, the contact person at the Mercedes-Benz emergency call centre forwards the call to Accident and Breakdown Management. Forwarding the call is however not possible in all countries.
- Breakdown assistance by a technician on location and/or the towing away of the vehicle to the nearest Mercedes-Benz service centre

  You may be charged for these services.
- Addition to the emergency guide after automatic accident or breakdown detection (⟶ page 675)

In the event of a breakdown or accident, further vehicle data is sent which enables optimal support by Mercedes-Benz Support and the authorised service partner or breakdown assistance.

- Supplement to the Digital Extra Telediagnosis

  With the Telediagnosis function, specific wear and failure reports are recorded by the service provider, in so far as these can be clearly interpreted and are available through the monitoring of components that are subject to diagnostics.

  If your vehicle detects a breakdown or threat of a breakdown, you may be prompted via the multimedia system to contact Mercedes-Benz Support for further help. This prompt in the multimedia system only appears when the vehicle is stationary.

ⓘ These Digital Extras are subject to technical restrictions such as the mobile phone coverage, mobile network quality and the ability of the processing systems to interpret the transferred data. In some circumstances, this can result in delays or the failure of the information to appear in the multimedia system.

Please note that the Mercedes-Benz Support Call is a Mercedes-Benz service. In emergencies, be sure to contact the usual national emergency number first or use the Mercedes-Benz emergency call system (⟶ page 683).

You can find more information on Digital Extras on the Mercedes-Benz Portal: https://me.secure.mercedes-benz.com

DATA TRANSFERRED FOR CALLS VIA DIGITAL EXTRAS

THE DATA TRANSFERRED DURING THE MERCEDES-BENZ SUPPORT CALL DEPENDS ON:

- The reason for initiation of the call
- The service that is selected in the voice control system
- The activated Digital Extras (⟶ page 677)

Which data is transferred for the Digital Extras can be taken from the currently valid terms of use and the data protection notes for Digital Extras. You can find these in your Mercedes me ID.

MB Apps (Digital Extras)

INFORMATION ON MB APPS AND DIGITAL EXTRAS

With a Mercedes me ID, you have access to services and offers from Mercedes-Benz.

Availability is dependent both on the country and equipment.

Availability is country-dependent.

You can obtain further information at a Mercedes-Benz service centre or in the Mercedes-Benz Portal: https://www.mercedes.me

CALLING UP THE MERCEDES ME ID USER ACCOUNT

Multimedia system:

MB Apps » Mercedes me

YOU HAVE A MERCEDES ME ID AND THE VEHICLE IS LINKED TO THE MERCEDES ME ID

► Select Mercedes me ID.

Information regarding the linked Mercedes me ID user account appears.

YOU DO NOT YET HAVE A MERCEDES ME ID AND THE VEHICLE IS NOT YET LINKED TO THE MERCEDES ME ID

ⓘ If you do not yet have a Mercedes me ID, you can create a Mercedes me ID at: https://www.mercedes.me or in the Mercedes-Benz App. A valid email address or phone number is required for this.

- ▶ Select ⌂.
- ▶ Select MB Apps.
- ▶ Select Mercedes me.
- ▶ To link your Mercedes me ID to the vehicle, follow the instructions on the display.

ⓘ If the Mercedes-Benz App is available on a mobile phone, the vehicle link can be made via the displayed QR code.

CALLING UP DIGITAL EXTRAS

Requirements:

- The vehicle is linked to your Mercedes me ID.

Multimedia system:

⌂ ▶▶ MB Apps ▶▶ Mercedes me

- ▶ Select My Digital Extras.

  The Digital Extras for which you have a valid licence are displayed in alphabetical order.

ORDERING OR RENEWING DIGITAL EXTRAS

To order or extend Digital Extras, use the Mercedes-Benz Store.

- ▶ Select ⌂.
- ▶ Select Store.

REMOVING THE LINK BETWEEN YOUR MERCEDES ME ID AND THE VEHICLE

Requirements:

- The Mercedes me ID that was first linked to the vehicle is registered.
- The user profile is synchronised (⟶ page 573).
- A Mercedes me PIN has been set.

Multimedia system:

⌂ ▶▶ MB Apps ▶▶ Mercedes me

- ▶ Select Mercedes me ID.
- ▶ Select Delete vehicle connection.

ⓘ Only the user whose Mercedes me ID was first linked to the vehicle can delete the link between all users and the vehicle.

SELECTING APPS

Requirements:

- Depending on the app, the general terms and conditions are confirmed.

Multimedia system:

→ Apps

▶ Select an app.

THE FOLLOWING APPS ARE AVAILABLE, FOR EXAMPLE:

- Weather
- Browser
- Additional apps, which are purchased or installed subsequently

ⓘ You can also access both of the first two apps via the quick access at Apps.

ⓘ The available features are country-dependent.
Licence fees may be applicable.

THE FOLLOWING FUNCTIONS ARE AVAILABLE FOR APPS, FOR EXAMPLE:

- Search function
- Filter function, for displaying search results at the current vehicle position or at the destination
- Display of detailed information
- Read-aloud function
- Setting functions

USING THE GALLERY APP

Multimedia system:

→ Apps

▶ Select Gallery.

IMAGES AND VIDEO RECORDINGS ARE DISPLAYED FROM THE FOLLOWING SOURCES, FOR EXAMPLE:

- Dashcam video recordings
- Collision detection images
- Video recordings and images from other available sources
- Camera app
- Favourites

▶ Select a tab.

ⓘ The Gallery app is also available on the front passenger display.

FILTERING DISPLAYS

▶ Select ⚙.

▶ Select an option.

All files, all images or all video recordings are displayed.

PLAYING BACK A VIDEO RECORDING

▶ Select ▶.

Playback starts.

▶ **To continue playback in full screen mode:** tap on the display.

▶ **To pause playback:** select ⏸.

- **To continue playback from the desired position:** move the position on the timeline by sliding it.
- **To select the previous or next video recording:** swipe to the right or left.

SCROLLING AND ZOOMING IMAGES

- **To scroll:** swipe on the image in one direction.
- **To zoom:** tap twice in quick succession on an image.
- **To select the previous or next image:** swipe to the right or left.

ADDING OR REMOVING A FILE FROM THE FAVOURITES

- Press and hold on a file.
- Select Add to favourites/Remove from favourites.
  A corresponding message appears.

SWITCHING WRITE PROTECTION ON OR OFF

ⓘ Active write protection is not supported by every app.

- Press and hold on a file.
- Activate or deactivate Write protection.

DELETING FILES

- Select .
- **To delete a single file:** tap on a file.
  will appear.
- **To delete all files:** tap on .
- **To delete:** select .
  A prompt appears.
- Select Yes.

ⓘ A single file can be deleted even after a long press on the file.

Emergency call systems

INFORMATION ON AVAILABLE EMERGENCY CALL SYSTEMS

TWO TYPES OF EMERGENCY CALL SYSTEM ARE AVAILABLE TO YOU IN THE VEHICLE:

- Mercedes-Benz emergency call system
- 112 emergency call system (EU eCall)

The Mercedes-Benz emergency call system is generally available for your vehicle for 10 years ex works.

The Mercedes-Benz Emergency Call System is not available in all countries. You can find out about the regional availability of the Mercedes-Benz emergency call system at: https://www.mercedes-benz-mobile.com/extra/ecall/

THE FOLLOWING APPLIES FOR BOTH EMERGENCY CALL SYSTEMS:

- The transfer of specific data is required for the intended function of both emergency call systems. This will be explained in the "Data transfer" section (⟶ page 686).
- Both emergency call systems are included as standard equipment in your vehicle and are activated at the factory.
- The use of both emergency call systems is exempt from charges.

- Both emergency call systems only function in areas in which the mobile phone network providers offer mobile phone coverage.

For both systems, insufficient network coverage from the mobile phone network providers can result in an emergency call not being transmitted.

DIFFERENCES BETWEEN THE MERCEDES-BENZ EMERGENCY CALL SYSTEM AND THE 112 EMERGENCY CALL SYSTEM (EU ECALL)

Mercedes-Benz emergency call system	112 emergency call system (EU eCall)
• The Mercedes-Benz emergency call system is permanently logged in to the mobile phone network. • Automatic and manual Mercedes-Benz emergency calls are transmitted to a Mercedes-Benz emergency call centre. In the event that the emergency call centre of the Mercedes-Benz emergency call system cannot be reached (e.g. due to a lack of network coverage), the 112 emergency call is carried out automatically.	• If you decide on the 112 emergency call system (EU eCall) only, then the system only logs in to the mobile phone network after the triggering of a manual or automatic emergency call. • The 112 emergency call system (EU eCall) transmits automatic and manual emergency calls directly to public coordination centres.

ⓘ The 112 emergency call system (EU eCall) in your vehicle meets the delegated regulation EU 2017/79. Proper and full functionality of the 112 emergency call system (EU eCall) depends on circumstances beyond the influence of Mercedes-Benz AG. This includes mobile network coverage and the technical infrastructure of the public reception centres in the respective countries.

ⓘ Please observe that in the event of a repair genuine Mercedes-Benz batteries must be used which have been certified pursuant to the delegated regulation EU 2017/79 (Appendix I). Other manufacturers are also permitted provided their batteries are certified according to the delegated regulation EU 2017/79.

There is the option of deactivating the Mercedes-Benz emergency call system and using only the 112 emergency call system (EU eCall). Contact address for carrying out deactivation of the Mercedes-Benz emergency call system are the local dealers.

MERCEDES-BENZ RECOMMENDS THE ACTIVATION OF THE MERCEDES-BENZ EMERGENCY CALL SYSTEM FOR THE FOLLOWING REASONS:

- In emergency situations when abroad, you can also get support in a language you speak.
- Several transmission technologies are used to accelerate the transfer of the accident data and improve reliability of the transmission.
- The Mercedes-Benz emergency call system is permanently logged in to the mobile phone network, which ensures faster placement of the emergency call and faster transfer of the accident data.

  Measures for rescue, recovery or towing away can then be initiated in quickly.
- With a Mercedes-Benz emergency call, the accident data is only transferred to the public coordination centre with the approval of the customer.

  In the event of an automatically triggered emergency call in which there is no voice contact, the accident data is transmitted immediately to the public emergency call centre.
- If the Mercedes-Benz emergency call centre is not available, the 112 emergency call is carried out automatically.

OVERVIEW OF EMERGENCY CALL SYSTEMS

Both the Mercedes-Benz emergency call system as well as the 112 emergency call system (EU eCall) can help to reduce the time between an accident and the arrival of emergency services at the site of the accident. They help locate an accident site in places that are difficult to access.

Both emergency call systems can initiate an emergency call automatically (⟶ page 685) or manually (⟶ page 686).

Only make emergency calls if you or others are in need of rescue. Do not make an emergency call in the event of a breakdown or a similar situation.

INDICATORS IN THE DISPLAYS

THE FOLLOWING MESSAGES APPEAR ON THE CENTRAL DISPLAY OR THE MEDIA DISPLAY OF BOTH EMERGENCY CALL SYSTEMS:

- SOS NOT READY: the vehicle is not switched on or the emergency call system is malfunctioning. This does not necessarily indicate complete failure of the emergency call system. Emergency calls can still be transmitted.

  The display only refers to the vehicle and does not take account of the availability of mobile phone networks and the Mercedes-Benz emergency call centre.

  The functional readiness of the emergency call system on the vehicle can be seen when the SOS NOT READY display disappears once the vehicle is switched on.
- SOS: the icon appears in the display during an active emergency call.

ⓘ In case of a malfunction of the emergency call system, the speakers, microphone or airbag, for example, are faulty.

ⓘ In case of a malfunction of the emergency call system, the speakers, microphone, airbag or the SOS button, for example, are faulty.

YOU CAN RECOGNISE A FAULT IN THE EMERGENCY CALL SYSTEM BY THE FOLLOWING DISPLAYS:

- A corresponding message appears on the driver and media display .

TRIGGERING AN AUTOMATIC EMERGENCY CALL

Requirements:

- The vehicle is switched on.
- The starter battery is sufficiently charged.

AN EMERGENCY CALL IS TRIGGERED AUTOMATICALLY:

- After activation of the restraint systems such as airbags or seat belt tensioners after an accident
- After an automatically initiated emergency stop by Active Emergency Stop Assist

THE EMERGENCY CALL HAS BEEN MADE:

- A voice connection is established with the emergency call centre.
- A message with accident data is transmitted to the emergency call centre.

If no connection can be made to the public emergency services, a corresponding message appears in the display.

- ► Dial the emergency number 112 or the appropriate local emergency call number on your mobile phone.

IF AN EMERGENCY CALL HAS BEEN INITIATED:

- If the traffic conditions and safety permit, remain in the vehicle until a voice connection is established with the emergency call centre.
- On the basis of the call, the emergency call centre decides whether it is necessary to call rescue teams and/or the police to the accident site.
- If no vehicle occupant answers, an ambulance is sent to the vehicle immediately.

TRIGGERING A MANUAL EMERGENCY CALL

- ► **To use the SOS button in the overhead control panel:** press the SOS button for at least one second (⟶ page 674).

or

- ► **To use voice control:** use the voice commands of the MBUX Voice Assistant (⟶ page 550).

THE EMERGENCY CALL HAS BEEN MADE:

- A voice connection is established with an emergency call centre.
- If the traffic conditions and safety permit, remain in the vehicle until a voice connection is established with the emergency call centre.
- On the basis of the call, the emergency call centre decides whether it is necessary to call rescue teams and the police to the accident site.
- A message with accident data is transmitted to the emergency call centre.

If no connection can be made to the public emergency services, a corresponding message appears in the display.

- ► Dial the emergency number 112 or the appropriate local emergency call number on your mobile phone.

EMERGENCY CALL SYSTEM DATA TRANSFER

For both the Mercedes-Benz emergency call system as well as the 112 emergency call system (EU eCall) data is transferred to the Mercedes-Benz emergency call centre or the public emergency services call centre.

Depending on the emergency call system (⟶ page 683) activated different data is transmitted to the appropriate emergency call centre.

TRANSMITTED DATA ACCORDING TO ACTIVATED EMERGENCY CALL SYSTEM:

Mercedes-Benz emergency call	112 emergency call
• Position data of the vehicle • Position data on the route (a few 100 m before the incident) • Direction of travel • Vehicle identification number • Drive type of the vehicle (e.g. petrol, diesel, CNG, LPG, electric or hydrogen) • Number of people detected in the vehicle • Whether the emergency call was initiated manually or automatically • Time of the accident • Language setting on the multimedia system • Digital Extras available or not This determines whether the call can be forwarded to Mercedes-Benz Support if required.	• Position data of the vehicle • Position data on the route (a few 100 m before the incident) • Direction of travel • Vehicle identification number • Drive type of the vehicle (e.g. petrol, diesel, CNG, LPG, electric or hydrogen) • Number of people detected in the vehicle • Whether the emergency call was initiated manually or automatically • Time of the accident

ⓘ If only the 112 emergency call system (EU eCall) is activated in the vehicle, the accident data is transmitted directly to the public emergency call centre.

FOR ACCIDENT CLARIFICATION PURPOSES, THE FOLLOWING MEASURES CAN BE TAKEN UP TO AN HOUR AFTER THE EMERGENCY CALL HAS BEEN INITIATED:

- The current vehicle position can be determined.
- A voice connection to the vehicle occupants can be established.
- Emergency call data can be called up.

SELF-DIAGNOSIS FUNCTION OF THE EMERGENCY CALL SYSTEM

Your vehicle checks the functionality of the emergency call system every time the vehicle is switched on.

During this time, the SOS button lights up red continuously for five seconds.

In the event of a system failure, you will be informed via a text message on the driver display and the red SOS NOT READY indicator on the central display or media display.

Please, make sure, that during 30 seconds after switching vehicle ON the red indicator SOS NOT READY in the upper right corner of display is switched OFF, this means the emergency call system passed diagnostics successfully.

INFORMATION ON DATA PROCESSING

PROCESSING OF PERSONAL DATA VIA THE MERCEDES-BENZ EMERGENCY CALL SYSTEM

All processing of personal data via the Mercedes-Benz emergency call system corresponds with the specifications in the EU Regulation 2016/679 "on the protection of natural entities with regard to the processing of personal data (GDPR)".

The data is solely used by the Mercedes-Benz emergency call system for rescue and recovery in the event of an accident.

The owner of a vehicle, that is equipped with a Mercedes-Benz emergency call system in addition to the 112 emergency call system (EU eCall), has the right to use the 112 emergency call system instead of the Mercedes-Benz emergency call system.

Contact address for carrying out deactivation of the Mercedes-Benz emergency call system are the local dealers.

PROCESSING OF PERSONAL DATA VIA THE 112 EMERGENCY CALL SYSTEM (EU ECALL)

All processing of personal data via the 112 emergency call system (EU eCall) corresponds with the specifications in the EU Regulation 2016/679 "on the protection of natural entities with regard to the processing of personal data (GDPR)" and is based particularly on the necessity of upholding the vital interests of the affected person in accordance with article 6, paragraph1, letter d of the GDPR.

The processing of this type of data is strictly limited to the purpose of operating the emergency calls to the standard European emergency call number 112.

DATA RECIPIENT

The recipients of data that is processed by the 112 emergency call system (EU eCall) are the relevant emergency call inquiry terminals. These are configured by the appropriate authorities of the respective country in which they are located to first accept and subsequently process emergency calls to the standard European emergency call number 112.

ARRANGEMENTS FOR DATA PROCESSING

BOTH EMERGENCY CALL SYSTEMS ARE DESIGNED SO THAT THE FOLLOWING REQUIREMENTS ARE FULFILLED:

- The data contained in the system memory is not accessible outside the system prior to the initiation of an emergency call.
- Both emergency call systems cannot be traced and there is no continuous tracking in normal operation.
- The data in the system's internal memory is automatically and continuously deleted.
- The location data of the vehicle is continuously overwritten in the system's internal memory, so that no more than the last three current locations required for the normal function of the system are available.
- The record of the activity data of both emergency call systems is only kept for as long as is required to fulfil the purpose of handling the emergency call, and under no circumstances for more than 13 hours after the time that an emergency call is initiated.

RIGHTS OF PERSONS AFFECTED BY THE DATA PROCESSING

The person affected by the data processing (the vehicle owner) has the right to access the data and if applicable can demand the correction, deletion or barring of data that affects him or her and that the processing of which does not correspond with the GDPR regulations. Each correction, deletion or barring carried out according to this regulation must be shared with the third party to which the data has been transmitted, provided this does not prove to be infeasible and does not incur disproportionate expenditure.

The person affected by the data processing has the right to complain to the appropriate data protection authority should they be of the opinion that their rights have been infringed by the processing of their personal data.

Responsible contact point for the processing of access rights: Konzernbeauftragter für den Datenschutz, Mercedes-Benz Group AG, HPC E600, D-70546 Stuttgart, Germany

In-Car Apps

In-Car Apps overview

Via the In-Car Mercedes-Benz Store, additional apps can be installed and used in the vehicle. The available In-Car Apps come from various categories, such as entertainment, news or games.

A Mercedes me ID and the activated Digital Extra In-Car App Pass are required for the installation of In-Car Apps. If no Mercedes me ID is available, one must be created and connected with the vehicle.

If the In-Car App Pass Digital Extra is not activated in the vehicle, it is possible to order it via the Mercedes-Benz Store. As soon as the corresponding package has been ordered, the In-Car App Pass Digital Extra is automatically activated. The In-Car App Pass enables access to the Mercedes-Benz AG app library and using additional apps in the vehicle.

ⓘ It is only possible to install In-Car Apps with an Internet connection.

ⓘ The availability of In-Car Apps is country-dependent.

ⓘ Some apps only work when the vehicle is parked.

Installing In-Car Apps via the In-Car Mercedes-Benz Store

Requirements:

- A Mercedes me ID is available.
- The vehicle is linked to a Mercedes me ID.
- The terms of use have been accepted.
- The In-Car App Pass Digital Extra is activated in the vehicle.

Multimedia system:

→ Store

▶ Select Apps.

The available apps are displayed.

▶ Select the desired app.

▶ Install the app.

The installed apps can be found on the Home screen.

ⓘ It is only possible to install In-Car Apps with an Internet connection.

ⓘ The availability of In-Car Apps is country-dependent.

Online and Internet functions

Internet connection

INFORMATION ON CONNECTING TO THE INTERNET

WARNING
Risk of distraction from information systems and communications equipment

If you operate information systems and communication devices integrated in the vehicle when driving, you could be distracted from the traffic situation. This could also cause you to lose control of the vehicle.

- Only operate this equipment when the traffic situation permits.
- If you cannot be sure of this, stop the vehicle whilst paying attention to road and traffic conditions and operate the equipment with the vehicle stationary.

You must observe the legal requirements for the country in which you are currently driving when operating the multimedia system.

WARNING
Risk of accident from operating mobile communication equipment while the vehicle is in motion

Mobile communication devices distract the driver from the traffic situation. This can also cause the driver to lose control of the vehicle.

- As a driver, only operate mobile communication devices when the vehicle is stationary.
- As a vehicle occupant, use mobile communication devices only in the designated area, e.g. in the rear passenger compartment.

You must observe the legal requirements for the country in which you are currently driving when operating mobile communication equipment in the vehicle.

DEPENDING ON THE VEHICLE'S EQUIPMENT AND AVAILABILITY IN THE COUNTRY, YOU CAN ESTABLISH AN INTERNET CONNECTION IN THE FOLLOWING WAYS:

- **Vehicles with a communication module:**
  - Using the communication module including data roaming (→ page 691)
  - Using Bluetooth® or Wi-Fi with a data-enabled mobile phone
- **Vehicles without a communication module:**
  - Using Bluetooth® or Wi-Fi with a data-enabled mobile phone

The Internet functions can only be used to a limited degree whilst driving.

SETTING UP AN INTERNET CONNECTION USING THE COMMUNICATION MODULE

Requirements:

- The vehicle is equipped with a permanently installed communication module.
- A Mercedes me ID is available.
- The vehicle is linked to a Mercedes me ID.
- The Entertainment Package is active.
- The Comfort Data Volume Digital Extra is activated.

Multimedia system:

Settings » System » Internet and Bluetooth » Manage Internet access

► Select Search for Internet access in the Internet device manager.

► Select Data package.

For most Digital Extras, data volume can be obtained when procuring the Digital Extras.

Additional data volume is required to use some functions, e.g. web browser or Wi-Fi hotspot.

If the data volume is reached, availability of the Digital Extras is limited.

Entertainment Package

Depending on the vehicle equipment, you can obtain an Entertainment Package via the Mercedes-Benz Store. In order to use the data package included, you must conclude your own contract with a mobile phone network provider via the Mercedes-Benz App. This can be terminated at any time and incurs no costs. Without this contract it is not possible to use the Digital Extras included in the previously acquired Entertainment Package. The availability of this option is dependent on the country.

Comfort Data Volume

If the data package option is not available or can be upgraded, you can purchase data volume directly from the mobile phone network provider for a fee. To do this, connect your smartphone to the MBUX hotspot and open the browser to be redirected to the home page of the third-party provider. The availability of this option is dependent on the country.

ⓘ Visit a Mercedes-Benz service centre to find out whether it is possible to purchase data volume in your country directly from a mobile phone network provider.

ⓘ Alternatively, and if available, you can utilise the tethering function of a mobile phone via Wi-Fi or Bluetooth® to use a Wi-Fi hotspot.

ⓘ With external Wi-Fi hotspots, which are encrypted via TKIP, online software updates cannot be carried out via the external Wi-Fi hotspot.

If there is no internet connection in the vehicle or the Mercedes-Benz App is not installed, as an alternative, the QR code displayed when the animation is called up can be scanned to play animations. The data tariff of the mobile communication device is used for the data connection.

DISCONNECTING THE AUTOMATIC INTERNET CONNECTION VIA COMMUNICATION MODULE

Requirements:

- Wi-Fi or Bluetooth® tethering are available in the vehicle.

Multimedia system:

Settings » System » Internet and Bluetooth » Manage Internet access

- ▶ Select the ••• settings in the line of Data package.
- ▶ **To disconnect the automatic connection:** select the Delete entry option.

The communication module is removed from the list of known hotspots, but can be reconnected manually at any time (⟶ page 691).

The Delete entry option permits the use of purchased data volume to be limited. The system is prevented from automatically establishing a connection to the communication module after this option has been activated.

SETTING UP AN INTERNET CONNECTION VIA WLAN

Requirements:

- The Wi-Fi function is activated on the multimedia system (⟶ page 590).
- The Wi-Fi hotspot function is activated on the mobile phone (see the manufacturer's operating instructions).
- Internet access via Wi-Fi is activated (see the manufacturer's operating instructions).

Multimedia system:

Settings » System » Internet and Bluetooth » Manage Internet access

This function is country-dependent.

The mobile phone is listed in the Internet device manager

- ▶ Select the mobile phone with the Wi-Fi symbol.

The mobile phone is not listed in the Internet device manager

- ▶ Select Search for access.
- ▶ Select the mobile phone with the Wi-Fi symbol.
  It may take a few seconds until the device is found by the Wi-Fi search.
- ▶ Log in to the Wi-Fi network (⟶ page 590).

THE INTERNET CONNECTION VIA WI-FI IS RESTRICTED OR DOES NOT FUNCTION IN THE FOLLOWING CASES:

- The mobile phone is switched off.
- Mobile data use is deactivated on the mobile phone.

- The Wi-Fi function is deactivated on the multimedia system.
- The Wi-Fi function is deactivated on the mobile phone.
- Internet access via Wi-Fi is deactivated on the mobile phone.

SETTING UP AN INTERNET CONNECTION VIA BLUETOOTH®

Requirements:

- The mobile phone supports the Bluetooth® profile PAN (**P**ersonal **A**rea **N**etwork).
- The mobile phone is connected to the multimedia system via Bluetooth® (⟶ page 659).
- Internet access via Bluetooth® is activated (see the manufacturer's operating instructions).

Multimedia system:

Settings » System » Internet and Bluetooth » Manage Internet access

ⓘ This function is country-dependent.

The mobile phone is listed in the Internet device manager

► Select the mobile phone with the Bluetooth® symbol.

The mobile phone is not listed in the Internet device manager

► Select Search for access.

In the list displayed, all mobile phones already known to the multimedia system are shown. New devices can be set up using the phone application.

► Connect the mobile phone using Bluetooth® (⟶ page 659).

ⓘ If a new mobile phone is connected using Bluetooth®, this is also used for the telephone application.

THE INTERNET CONNECTION VIA BLUETOOTH® IS RESTRICTED OR DOES NOT FUNCTION IN THE FOLLOWING CASES:

- The mobile phone is switched off.
- The mobile phone network coverage is insufficient.
- Mobile data use is deactivated on the mobile phone.
- The Bluetooth® function on the multimedia system is switched off and the mobile phone is to be connected via Bluetooth®.
- The Bluetooth® function is switched off on the mobile phone and the mobile phone is to be connected via Bluetooth®.
- Neither the mobile phone network nor the mobile phone allow simultaneous use of a telephone and an Internet connection.
- The mobile phone has not been enabled for Internet access via Bluetooth®.

CANCELLING INTERNET ACCESS PERMISSION FOR A MOBILE PHONE

Multimedia system:

Settings » System » Internet and Bluetooth » Manage Internet access

► Select options ••• next to the name of the mobile phone.

► Select Delete configuration.

► Select Yes.

Connection status

CONNECTION STATUS OVERVIEW

DEPENDING ON THE CONNECTION STATUS, THE FOLLOWING SYMBOLS CAN APPEAR ON THE CENTRAL DISPLAY IN THE STATUS LINE:

- : a Wi-Fi device is selected as Internet access.
- : a Bluetooth® device is selected as Internet access.
- Mobile communications standard (e.g. 4G + double arrow symbol): the communication module is selected as the hotspot.

DISPLAYING THE CONNECTION STATUS

Multimedia system:

→

► Briefly press the status line.

The extended status line is displayed.

► Briefly press the Internet symbol in the symbol overview.

The current connection status is displayed.

NOTES ON DISPLAYING THE CONNECTION STATUS

- When connecting via Wi-Fi, the connection status and device name are displayed.
- When connecting via a Bluetooth® device, the connection status, device name, and network type are displayed.
- In the case of a connection via the communication module the following status information can be shown:
  - Type of network
  - Status (online, offline, data volumes available or used, limited service)
- For vehicles with a communication module, the connection data of Digital Extras for which the user does not have to pay can be displayed under Digital Extras.

Media

Information about media mode

INFORMATION ABOUT SUPPORTED FORMATS AND DATA STORAGE MEDIA

WARNING
Risk of distraction when handling data storage media

If you handle a data storage medium while driving, your attention is diverted from the traffic conditions. This could also cause you to lose control of the vehicle.

► Only handle a data storage medium when the vehicle is stationary.

SUPPORTED FORMATS AND DATA STORAGE MEDIA:

Permissible filing systems	FAT32, exFAT, NTFS
Permissible data storage media	USB mass storage device, iPod®/iPhone®, MTP devices, Bluetooth® audio devices
Supported audio formats	MP3, WMA, AAC, WAV, FLAC, ALAC
Supported video formats	MPEG, MKV, MP4, M4V, WMV

OBSERVE THE FOLLOWING NOTES:

- The multimedia system supports a total of up to 50,000 files.
- Data storage media up to 2 TB are supported (32-bit address space).
- Due to the large variety of available music and video files regarding encoders, sampling frequency and data transfer rates, playback cannot be guaranteed.
- Due to the wide range of USB mass storage devices available on the market, playback cannot be guaranteed for all USB mass storage devices.
- Videos up to FullHD (1920x1080) are supported.
- Copy-protected music and video files or DRM (Digital Rights Management) encrypted files cannot be played back.
- Files with the corresponding format can be played back from the USB mass storage device in Dolby Atmos.

INFORMATION ON COPYRIGHT PROTECTION AND TRADEMARKS

Audio files which you create yourself (e.g. copies of data storage media you make yourself) are generally subject to copyright protection. In many countries, reproductions are not permitted without the prior consent of the copyright holder, even for private use. Make sure that you know about the applicable copyright regulations and that you comply with these.

Manufactured under licence from Dolby Laboratories. Dolby and the double-D symbol are registered trademarks of Dolby Laboratories Licensing Corporation. Confidential unpublished works. Copyright 2020-2022 Dolby Laboratories. All Rights Reserved.

Manufactured under licence from Dolby Laboratories. Dolby, Dolby Audio and the double-D symbol are trademarks of Dolby Laboratories.

For DTS Patents, see https://patents.dts.com. Manufactured under licence from DTS Licensing Limited. DTS, the Symbol, & DTS and the Symbol together are registered trademarks, and DTS TruVolume is a trademark of DTS, Inc.©. DTS, Inc. All Rights Reserved.

DTS® Connected Radio™

For DTS Patents, see http://patents.dts.com. Manufactured under licence from DTS Licensing Limited. DTS, DTS Connected Radio, and the DTS logo are registered trademarks or trademarks of DTS, Inc. in the United States and other countries. © 2020 DTS, Inc. ALL RIGHTS RESERVED. Lyrics licensed and provided by Lyric Find™. Content licensed and sourced from Radioplayer™.

Gracenote, the Gracenote logo and logotype, "Powered by Gracenote", MusicID and Playlist Plus are either registered trademarks or trademarks of Gracenote, Inc. in the United States and/or other countries.

This product incorporates Spotify software which is subject to 3rd party licences found here: https://www.spotify.com/connect/third-party-licenses

TIDAL

TIDAL and TIDAL logo are registered trademark of Aspiro AB in the European Union and other countries.

Overview of the media menu

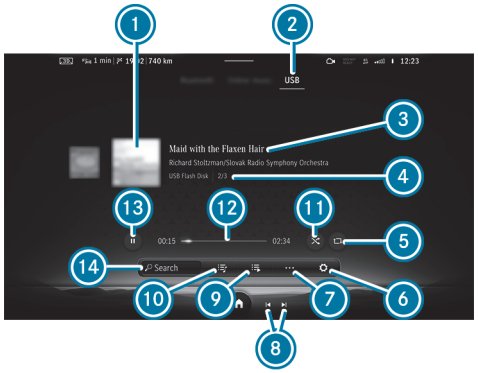

1. Album cover
2. Active media source
3. Track and artist
4. Active data storage medium and current track number/track in playback list
5. Repeat
6. Options
7. Additional options
8. Previous or next track and fast rewind or fast forward
9. Playlists and categories
10. Additional categories
11. Random playback
12. Timeline
13. Pauses playback
14. Media search

When the control menu is called up on the zero layer, the following functions are available:

- Controlling media playback
- Selecting tracks from the current playlist
- Selecting a playback list
- Media search
- Selecting a media source
- Creating favourites
- Configuring settings

Further information on:
- Overview of the zero layer (⟶ page 559).
- Operating the zero layer (⟶ page 561).

Connecting the data storage medium to the multimedia system

CONNECTING A USB MASS STORAGE DEVICE

NOTE
Damage due to high temperatures

High temperatures can damage USB mass storage devices.

► After use, remove USB mass storage devices from the vehicle.

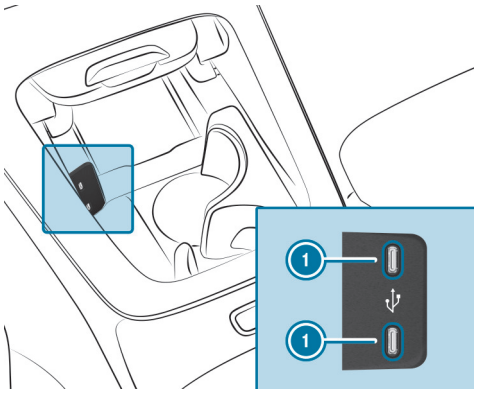

The multimedia connection unit is found in the centre console storage compartment and has two type C USB ports (1). Depending on the vehicle equipment, there are further USB ports in the stowage compartment under the armrest.

► Connect the USB mass storage device with the USB port.

SEARCHING FOR AND AUTHORISING A BLUETOOTH® AUDIO DEVICE

Requirements:

- Bluetooth® is activated on the multimedia system and audio device.
- The audio device supports the Bluetooth® audio profiles A2DP and AVRCP.
- The audio device is "visible" for other devices.

Multimedia system:
Media » Bluetooth

AUTHORISING A NEW BLUETOOTH® AUDIO DEVICE

► Select Connect device.
Detected equipment is displayed in the device list.

► Select an audio device.
Authorisation starts. A code is displayed on the multimedia system and on the mobile phone.

► If the codes are identical, confirm on the audio device.

► Select No, only music.
The Bluetooth® audio device is connected with the multimedia system.

CONNECTING A PREVIOUSLY AUTHORISED BLUETOOTH® AUDIO DEVICE

► Select a Bluetooth® audio device from the list.
The connection is being established.

Starting media playback

Requirements:

- A data storage medium is connected to the multimedia system.

Multimedia system:

→ Media

- Select a media source.

Controlling media playback

Multimedia system:

→ Media

- **To pause playback:** select ⏸.
- **To continue playback:** select ▶.
- **To repeat a track:** select 🔁.

  FOR THE REPEAT FUNCTION THERE ARE THE FOLLOWING SETTINGS:

  - **Select once:** the active playlist is repeated.
  - **Select twice:** the current track is repeated.
  - **Select three times:** the repeat function is deactivated.
- **To play back tracks in random order:** select 🔀.
- **To rewind or fast-forward a track:** tap on the desired point on the timeline.
- **To select the next track:** select ⏭.
- **To select the previous track:** select ⏮.
- **To scroll through tracks quickly:** press and hold ⏮ or ⏭.
- **To show the current track list:** select ♫.

ⓘ You can also control media playback on the zero layer using the control menu displayed (→ page 559).

Additional options for setting media playback

Multimedia system:

→ Media

CALLING UP ADDITIONAL OPTIONS

- Select •••.

  The additional options are shown.
- Select an option.

Media search

NOTES ABOUT THE SEARCH FUNCTION IN CATEGORIES

Under ♫ you can search through all available media files. There are several categories available for selection. The categories shown depend on the connected device and data format.

ⓘ The categories are available as soon as the entire media content has been read in and analysed.

Availability of the media search with Android devices may be limited.

STARTING A SEARCH IN CATEGORIES

Multimedia system:

Media

- Select a category.

USING THE KEYWORD SEARCH

Multimedia system:

Media

You can look for content using the keyword search with free text input.

- Select .

  A keyboard for character entry appears.

- Enter the term searched for.

The search begins with the first character entered. The more characters entered the more concrete the search results become.

- Select the desired entry from the result list.

  If a list with several tracks is selected, then this is opened in the search.

  To playback all of the tracks in the list, select ••• and then Play now.

Media operation on the front passenger display (only vehicles with MBUX Superscreen)

INFORMATION ON MEDIA MODE ON THE FRONT PASSENGER DISPLAY (ONLY VEHICLES WITH MBUX SUPERSCREEN)

You can also use functions of the MBUX multimedia system on the front passenger display.

YOU CAN FIND MORE INFORMATION ON THE FOLLOWING TOPICS:

- Information about supported formats and data storage media (⟶ page 695)
- Information on copyright protection and trademarks (⟶ page 695)
- Overview of the media menu (⟶ page 697)

Bluetooth® headphones can be connected to the MBUX multimedia system on the front passenger display.

WARNING

Risk of injury from unsecured items in the vehicle

If objects such as headphones/headsets or external audio/video sources are not secured in the vehicle interior, they can be flung around and hit vehicle occupants.

- Always stow these items or similar objects carefully so that they cannot be flung around, for example in a lockable vehicle stowage compartment.

Observe the information on loading the vehicle.

WARNING
Health hazard due to excessive volume on headphones

Excessive volume can damage your hearing.

- Avoid wearing headphones for long periods of time and at too high a volume (85 decibels).
- Ensure that the volume is set to a comfortable level.

The headphones are special equipment for the MBUX multimedia system.
The headphones are also available from Mercedes-Benz Customer Solutions or from specialist dealers. Information on connecting and operating the headphones can be found in the manufacturer's operating instructions.

The function of wireless headphones can be impaired by other radio-based electronic devices, such as mobile phones, for example.

STARTING AND OPERATING MEDIA PLAYBACK ON THE FRONT PASSENGER DISPLAY (ONLY VEHICLES WITH MBUX SUPERSCREEN)

Requirements:

- A data storage medium is connected to the multimedia system.

Multimedia system:

→ Media

- Select a media source.
- **To adjust the volume:** select in the menu line and press − or +.
- **To set playback via vehicle loudspeakers:** press in the menu line.
- **To connect Bluetooth® headphones to the front passenger display:** press in the menu line and select the desired headphones.

THE FOLLOWING FUNCTIONS ARE AVAILABLE:

- Controlling media playback (⟶ page 699)
- Options for setting media playback (⟶ page 699)
- Starting a search in categories (⟶ page 700)
- Using the keyword search (⟶ page 700)

Radio

Switching on the radio

Multimedia system:

Radio

- Start the application on the multimedia system home screen.
  The radio menu appears. You will hear the last station played on the last frequency band selected.

Radio overview

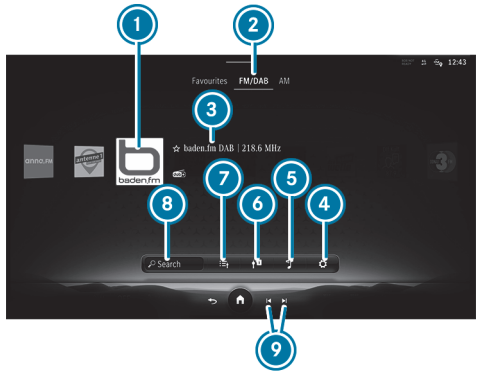

1. Preview image
2. Active frequency band
3. Station name or set frequency
4. Settings
5. Sound settings
6. Switches on traffic reports
   With DAB equipment: switches on radio announcements
7. Station list
8. Search
9. Previous or next station

The availability of the frequency bands is dependent on the equipment.

When the control menu is called up on the zero layer, the following functions are available:

- Selecting a radio station
- Setting radio stations from the station list
- Storing radio stations
- Frequency band
- Search function
- Creating favourites
- Configuring settings

FURTHER INFORMATION ON:

- Overview of the zero layer (→ page 559).

- Operating the zero layer (⟶ page 561).

You can watch an animation on this topic via the following link:

Setting the frequency band

Multimedia system:

Radio

- Select a frequency band or a favourite.

Selecting a radio station

Multimedia system:

Radio

- Swipe to the left or right on the control element or select a radio station.

Calling up the radio station list

Multimedia system:

Radio

- Select .
  The station list appears.
- Swipe the station list up or down.
- Select a station.

Searching for radio stations using station names or frequency entry

Multimedia system:

Radio

- Select .
- Enter a station name or frequency.
- Select a station.

Selecting a recommended radio station

Requirements

- The multimedia system has gathered sufficient data in order to show station suggestions.

Multimedia system:

Radio

- Select .
  The recommended stations are shown.
- Select a suggested station.
  The selected station is played.

Storing radio stations

Multimedia system:

Radio

- Select a radio station.
- Select ☆.

Managing favourites

Multimedia system:

Radio Favourites

MOVING STATIONS

- Press ☆.
  The list of favourites appears.
- Press ••• to the far right of the station name.
- Select Move.
- Move the station to the new position.

Calling up a slide show (FM/DAB radio mode)

Multimedia system:

Radio

The slide show displays additional information provided by the station as an image. This can include logos, album covers, music tracks, programmes, news or service information, for example.

ⓘ The slide show is available for DAB+ channels that broadcast additional information.

- Press the station picture on the central display.
  The image is enlarged and, if available, displayed with the additional information of the slideshow.

Switching a slideshow on or off (FM/DAB radio mode)

Multimedia system:

Radio

- Switch DAB Slideshow or Expanded Radio Slideshow on or off.
  When both slideshows are switched on, the contents of both slideshows alternate.

Activating/deactivating the frequency fix function

Multimedia system:

Radio Active frequency band

- Activate or deactivate Frequency fix.
  If the function is activated, the set frequency is kept even if the reception is poor.

Activating/deactivating traffic announcements

Multimedia system:

→ Radio

- Select TA.

  The traffic information is switched on or off.

Activating/deactivating radio announcements

Multimedia system:

→ Radio

- Switch on Radio announcements.

  The selected radio announcements are played.

  When Radio announcements are first switched on, Traffic information service (TA), Travel and Warning are preset.

or

- Switch off Radio announcements.

  No radio announcements are played.

Selecting radio announcements

Multimedia system:

→ Radio » Radio announcements

In terms of the radio announcements, depending on the station you can choose between, e.g. Traffic information service (TA), Travel and Warning.

- Switch an announcement on ☑ or off.

Setting the traffic information service volume increase

Multimedia system:

→ System » Audio

- Select Navigation & traffic announcements.
- Set a value for Traffic announc. vol. increase.

Displaying radio text

Multimedia system:

→ Radio » Active frequency band

- Activate or deactivate Radio text information.

Sound

Sound settings

INFORMATION ABOUT THE SOUND SYSTEM
The sound system has a total output of 125 W and is equipped with seven speakers. It is available for all functions in the radio and media modes.

The call can also be made from other audio sources. Replace Media with, for example, Radio in the menu path.

CALLING UP THE SOUND MENU
Multimedia system:
Media

- Select one of the functions shown to make settings.

ADJUSTING TREBLE, MID-RANGE AND BASS SETTINGS
Multimedia system:
Media

- Set Treble, Mid or Bass.

SWITCHING LOUDNESS NORMALISATION ON OR OFF
Multimedia system:
Media Loudness normalisation

The function compensates for differing loudness when changing between audio sources and within an audio source. Several levels are available for this purpose. The currently set level is displayed.

Loudness normalisation can also be switched off.

- Switch on one level.

or

- Switch off loudness normalisation.

SETTING THE BALANCE AND FADER
Multimedia system:
Media Balance and Fader

ADJUSTING THE BALANCE

- In the grid shown, move the volume distribution between the right and left speakers in the vehicle.

  The volume is distributed between the right and left-hand speakers.

ADJUSTING THE FADER

- In the grid shown, move the volume distribution between the front and rear speakers in the vehicle.

  The volume is distributed between the front and rear speakers.

SWITCHING THE GREETING TONE ON/OFF
Multimedia system:
Settings System Audio

SWITCHING ON THE GREETING TONE
If the Greeting tone is switched on and you enter the vehicle, the vehicle will welcome you with a corresponding sound.

- Tap on in order to switch on the Greeting tone.

SWITCHING OFF THE GREETING TONE

- Tap on  in order to switch off the Greeting tone.

Burmester® 4D surround sound system

INFORMATION ON THE BURMESTER® 4D SURROUND SOUND SYSTEM

The Burmester® 4D surround sound system has a total output of 730 W and is equipped with 17 speakers including two speakers close to the driver's ear to support navigation announcements and telephony. Furthermore the sound system is equipped with two tactile transducers each for the driver and front passenger seats. It is available for all functions in the radio and media modes.

ⓘ The navigation announcements from the speakers close to the driver's ears can be set in the system settings (⟶ page 635). Telephony with the speakers close to the driver's ears can be set in the telephone menu (⟶ page 662).

ⓘ Calling up from other audio sources is also possible. Replace Media with, for example, Radio in the menu path.

CALLING UP THE SOUND MENU IN THE BURMESTER® 4D SURROUND SOUND SYSTEM

Multimedia system:



ADJUSTING SOUND SETTINGS

- Select one of the functions shown to make settings.

SETTING 4D SOUND

- Select 4D sound adjustment.
- Select a seat.
- Use the controller to set the intensity of the bass vibrations.

ADJUSTING THE TREBLE, MID AND BASS SETTINGS IN THE BURMESTER® 4D SURROUND SOUND SYSTEM

Multimedia system:



- Set Treble, Mid or Bass.

SWITCHING LOUDNESS NORMALISATION IN THE BURMESTER® 4D SURROUND SOUND SYSTEM ON OR OFF

Multimedia system:



The function compensates for differing loudness when changing between audio sources and within an audio source. Several levels are available for this purpose. The currently set level is displayed.

Loudness normalisation can also be switched off.

- Switch on one level.

or

- Switch off loudness normalisation.

ADJUSTING THE BALANCE AND FADER IN THE BURMESTER® 4D SURROUND SOUND SYSTEM

Multimedia system:

→ ⌂ » Media » ⚙ » Balance and Fader

ADJUSTING THE BALANCE

- Move the volume distribution between the right and left sides of the vehicle in the grid shown.

  The volume is distributed between the speakers on the left and right sides in the vehicle.

ADJUSTING THE FADER

- Move the volume distribution between the front and rear of the vehicle in the grid shown.

  The volume is distributed between the speakers in the front and rear of the vehicle.

ⓘ Setting 0 is recommended for high quality music and voice reproduction.

SELECTING A SOUND PROFILE IN THE BURMESTER® 4D SURROUND SOUND SYSTEM

Multimedia system:

→ ⌂ » Media » ⚙

SETTING AN EXISTING SOUND PROFILE

- Select a sound profile.

SETTING UP A PERSONAL SOUND PROFILE

- Select Personal sound profile and select ⚙.
- Select Reconfigure.

  The setup assistant will be restarted.

SETTING UP A PERSONAL SOUND PROFILE FOR THE FIRST TIME:

- Select Personal sound profile.
- Open the set-up assistant with Start.
- Observe the messages on the display and select the preferred settings.

  The personal sound profile is created with the selected settings and can be selected in the Sound profiles menu.

CHANGING INDIVIDUAL SETTINGS OF THE PERSONAL SOUND PROFILE AT A LATER DATE:

- Select Personal sound profile and ⚙.
- Adjust the desired settings.

ⓘ The availability of a Personal sound profile is dependent on the equipment.
The set-up assistant is available when the vehicle is stationary.

ADJUSTING THE SOUND FOCUS IN THE BURMESTER® 4D SURROUND SOUND SYSTEM

Multimedia system:

→ ⌂ » Media » ⚙ » Sound focus

- Select a seat or seat row for the sound focus.

  The sound focus is activated.

or

- Select the seat or seat row again.

  The sound focus is deactivated.

Progressive Sport Sound

INFORMATION ON PROGRESSIVE SPORT SOUND

With the Progressive Sport Sound function, engine sounds can be experienced even more intensely inside your vehicle. To do this, your vehicle generates sporty engine sounds to match the current driving situation and plays them through the speakers of your sound system inside the vehicle.

CALLING UP PROGRESSIVE SPORT SOUND

Multimedia system:

Settings » Vehicle » Driving » Progressive Sport Sound

SWITCHING PROGRESSIVE SPORT SOUND ON OR OFF

- Tap on to switch on Progressive Sport Sound.

or

- Tap on to switch off Progressive Sport Sound.

The availability of Progressive Sport Sound is country-dependent.

Camera app

Overview of the camera app

The laws concerning video and audio recordings of vehicle surroundings and vehicle occupants may differ depending on the country. Please observe the laws of the country in which you are recording.

With the camera app, you can take photos, multiple shots and videos, both from Internal as well as from External. You can switch between the two cameras in the overview. It is operated using the touchscreen or Touch Control.

You can view your captured photos and videos in the Gallery app.

Additional information about the Gallery app (⟶ page 682).

ⓘ The function is country-dependent.

ⓘ If the USB flash drive is not recognised by the vehicle, you can try to fix the error by connecting the USB flash drive to a computer.

ⓘ To ensure safe operation, format the USB storage devices before using them for the first time on FAT32 or exFAT.

ⓘ Do not use USB storage devices with a writing speed of less than 5 MB/s.

ⓘ Do not remove the USB flash drive during recording. This can damage the files.
Only remove the USB flash drive via the settings (⟶ page 711).

DISPLAY MESSAGES

IN THE FOLLOWING SITUATIONS DISPLAY MESSAGES MAY BE SHOWN:

- The memory is full or there are only a few minutes recording time available. The video recording stops or will be stopped imminently.
  Change the USB device or delete a photo or video file.
- The camera is not functioning. A message appears.
  Have the camera checked in a Mercedes-Benz service centre.
- No USB device is connected to save the recordings.
  The Please insert a storage medium into the USB port to start recording. message appears.
- If a dashcam recording is started during a video recording with the Camera app, the video recording pauses.
  The Recording interrupted by dashcam recording. message appears.
- The camera is being used from another seat.

Taking photos and videos with the Camera app

Requirements:

- For recording and saving a photo or video file: a USB device is connected with the multimedia system (→ page 698).
- The vehicle is switched on.

Multimedia system:

Apps » Camera

THE FOLLOWING RECORDING MODES ARE AVAILABLE:

- Video
- Photos
- Multiple shots

► Select the corresponding icon.

or

► Trigger the camera via the MBUX Voice Assistant.

ⓘ Every time the Camera app is launched, a liability notice appears. If the application should be started, select OK.

ⓘ Accept the notice and permit each registered user access to the camera before using it for the first time.

ⓘ You can view your captured photos and videos in the Gallery app. To do this, select the Gallery app icon in the overview.

Configuring Camera app settings

Multimedia system:

Apps » Camera »

THE FOLLOWING FUNCTIONS ARE AVAILABLE:

- Snapshot timer
- Multiple shots
- Interval between shots

► Select an option.

► Change the settings.

EJECTING THE USB FLASH DRIVE

► Select Storage medium.

► Select ⏏ after the device name.

The You can now disconnect the storage medium. message appears.

Back to Contents

Maintenance and care

This interactive PDF works like a website – tap or click a button to jump straight to where you want to go.
You can return here at any time via the navigation bar at the top left.

ASSYST PLUS service interval display
Maintenance Management
Telediagnostics
Engine compartment
Cleaning and care

ASSYST PLUS service interval display

Function of the ASSYST PLUS service interval display

The ASSYST PLUS service interval display on the driver's display provides information on the remaining time or distance before the next service due date.

You can hide this service display using the back button on the steering wheel.

DEPENDING ON HOW THE VEHICLE IS USED, THE ASSYST PLUS SERVICE INTERVAL DISPLAY MAY SHORTEN THE SERVICE INTERVAL, E.G. IN THE FOLLOWING CASES:

- Mainly short-distance driving
- When the engine is often left idling for long periods
- In the event of frequent cold start phases
- **Vehicles with diesel particulate filters:** in the event of frequently interrupted regeneration of the diesel particulate filter

Mercedes-Benz recommends avoiding such operating conditions.

You can obtain information concerning the servicing of your vehicle from a qualified specialist workshop, e.g. a Mercedes-Benz Service Centre.

Displaying the service due date

Driver display:

Service

The next service due date is displayed.

- **To exit the display:** press the back button on the steering wheel.

Information on performing regular servicing work

NOTE

Premature wear through failure to observe service due dates

Service work which is not carried out at the right time or incompletely can lead to increased wear and damage to the vehicle.

- Observe the specified service intervals. If there are any uncertainties regarding the service due date, forexample if the battery is disconnected, operating conditions are difficult, etc., contact a qualified specialist workshop.
- Have the prescribed service work carried out at a qualified specialist workshop.

Notes on special service requirements

The prescribed service interval is based on normal operation of the vehicle. Have the maintenance work carried out more often than prescribed if operating conditions are difficult or the vehicle is subject to increased stress.

The ASSYST PLUS service interval display is only an aid. It is the responsibility of the driver of the vehicle to have maintenance work carried out more often than prescribed due to actual operating conditions and/or stresses.

EXAMPLES OF ARDUOUS OPERATING CONDITIONS:

- Regular city driving with frequent intermediate stops
- Mainly short-distance driving
- Frequent operation in mountainous terrain or on poor road surfaces
- When the engine is often left idling for long periods
- Operation in particularly dusty conditions and/or if air-recirculation mode is frequently used

In these or similar operating conditions, have the interior air filter, air filter, engine oil and oil filter, for example, changed more frequently. Check the tyres more frequently if the vehicle is operated under increased stress. Further information can be obtained at a qualified specialist workshop.

Non-operational times with disconnected battery

The ASSYST PLUS service interval display can only calculate the service due date when the battery is connected.

- Display and note down the service due date on the driver display before disconnecting the battery (⟶ page 713).
- The period with disconnected battery is not taken into account by ASSYST PLUS. Deduct the period with disconnected battery from the time indicated on the driver display.
  - The calculated date serves as a new service due date.
  - The service interval for distance before service due date (km) is not affected in this regard.

Maintenance Management

Notes about Maintenance Management

If the Maintenance Management service is activated, relevant data is automatically transferred to the Mercedes-Benz customer centre.

The customer centre transmits the data to the service partner that you have entered on the Mercedes-Benz website at: https://www.mercedes.me. You will then receive individual recommendations regarding the maintenance of your vehicle.

The calculation of the optimal transmission time of the maintenance request to the service partner is subject to technical limitations that may cause the maintenance recommendation to be perceived as too early or too late or not to be made at all. In this case, you can conveniently arrange a maintenance appointment with the customer centre via the maintenance reminder in the multimedia system.

Maintenance Management and the maintenance reminder in the multimedia system are not available in every country. Contact a Mercedes-Benz service centre to find out whether this function is available in your country.

Data transferred when using Maintenance Management

When the service is activated, relevant data is automatically transferred to determine the required scope of maintenance as well as fault detection and fault rectification.

Details on data transmission can be found in the data protection notes for Mercedes-Benz Support. These can be found at: https://www.mercedes.me under "My Account", "Privacy & Legal".

Maintenance Management and the maintenance reminder in the multimedia system are not available in every country.

Telediagnostics

Notes about Telediagnosis

This service is not available in all countries.

The vehicle can detect if certain wear parts need to be replaced or if malfunctions have occurred in vehicle systems. If the Telediagnosis service is activated, relevant data is automatically transmitted to the manufacturer. If fault conditions are detected by the vehicle system self-diagnosis, the system transmits recommendations for action to the Mercedes-Benz Customer Centre depending on the fault detected. The Customer Centre transmits the data to the service partner that you have entered on the Mercedes-Benz website at: https://www.mercedes.me.

For selected faults, the notification that a malfunction has been detected may appear in the multimedia system with a request to contact the Mercedes-Benz Customer Centre. From this message, a call can be made directly to the Customer Centre for assistance.

The transmission of a notification to the multimedia system depends on the country, vehicle model and equipment and requires a fast data connection, over which the service provider has no influence.

Reliable fault detection is subject to technical limitations. Therefore, only a limited selection of faults can be detected and recommendations for action transmitted to the Customer Centre and the service partners. Mercedes-Benz AG is continuously working on the expansion of this service. The fault detection depends on the country, vehicle model and equipment.

Data transferred when using Telediagnosis

When the service is activated, relevant data is automatically transferred to determine the required scope of maintenance as well as fault detection and fault rectification.

Details on data transmission can be found in the data protection notes for Mercedes-Benz Support. These can be found at: https://www.mercedes.me under "My Account", "Privacy & Legal".

The scope of the transmitted data depends on the vehicle model and its equipment. For technical reasons, not all data is available at all times.

Engine compartment

Active bonnet (pedestrian protection)

OPERATION OF THE ACTIVE BONNET (PEDESTRIAN PROTECTION)
In certain accident situations, the risk of injury to pedestrians can be reduced by the actuation of the active bonnet. The rear section of the bonnet is raised for this purpose.

After being triggered, the active bonnet remains in the raised position. Limited visibility due to the raised bonnet cannot be ruled out.

After the active bonnet has been actuated, pedestrian protection may be limited.

Have the full functionality of the active bonnet restored immediately in a qualified specialist workshop.

If necessary, adjust your seat position and drive carefully to a qualified specialist workshop. If a safe continued journey is not possible, contact a qualified specialist workshop.

Opening and closing the bonnet

DANGER
Risk of fatal injuries when carrying out maintenance work during the charging process

During the charging process, the high-voltage on-board electrical system is under high voltage.

- Do not perform any maintenance work during the charging process.

WARNING
Risk of accident due to driving with the bonnet unlocked

The bonnet may open and block your view.

- Never release the bonnet when driving.
- Before every trip, ensure that the engine bonnet is locked.

WARNING
Risk of accident and injury when opening and closing the bonnet

The bonnet may suddenly drop into the end position.

There is a risk of injury for anyone in the engine bonnet's range of movement.

- ► Do not open or close the bonnet if there is a person in the bonnet's range of movement.

WARNING
Risk of burns when opening the bonnet

IF YOU OPEN THE BONNET IN THE EVENT OF AN OVERHEATED ENGINE OR FIRE IN THE ENGINE COMPARTMENT, THE FOLLOWING SITUATIONS MAY OCCUR:

- You may come into contact with hot gases.
- You may come into contact with other escaping hot operating fluids.

- ► Before opening the bonnet, allow the engine to cool down.
- ► In the event of a fire in the engine compartment, keep the bonnet closed and call the fire service.

WARNING
Risk of injury due to moving parts

Components in the engine compartment may continue to run or start unexpectedly even when the drive system is switched off.

Observe the following if you must open the bonnet:

- ► Switch off the vehicle.
- ► Never touch the danger zones surrounding moving components, e.g. the rotation area of the fan.
- ► Remove jewellery and watches.
- ► Keep items of clothing and hair away from moving parts.

WARNING
Risk of injury from touching components under voltage

The ignition system and the fuel injection system operate at high voltage. You could receive an electric shock.

- ► Never touch ignition system or fuel injection system components when the vehicle is switched on.

THE LIVE COMPONENT PARTS INCLUDE THE FOLLOWING, FOREXAMPLE:

- Ignition coils
- Fuel injectors
- Electric lines to the ignition coils and the fuel injectors

WARNING
Risk of burns from hot component parts in the engine compartment

Certain component parts in the engine compartment can be very hot, e.g. the engine, the cooler and parts of the exhaust system.

- Allow the engine to cool down and only touch component parts described in the following.

WARNING
Risk of injury from using the windscreen wipers when the bonnet is open

If the windscreen wipers start moving when the bonnet is open, you could be trapped by the wiper linkage.

- Always switch off the windscreen wipers and the vehicle first if you need to open the bonnet.

OPENS THE BONNET

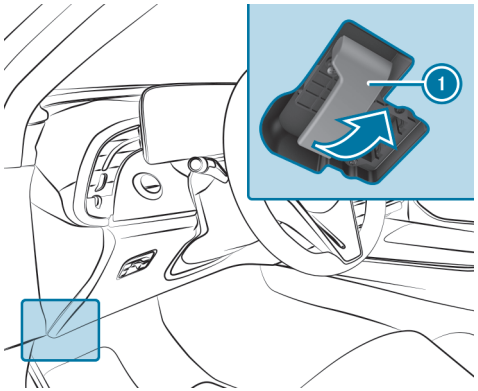

- To release the bonnet, pull on the handle (1).

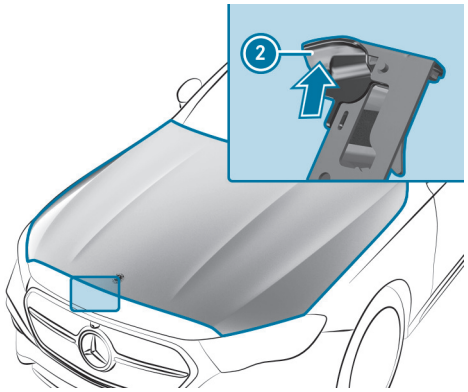

- Push the handle (2) of the bonnet catch upwards and lift the bonnet until it opens automatically.

CLOSE THE BONNET

NOTE
Damage to the bonnet due to manual closing

If the bonnet is closed manually, there is a risk of dents.

- Do not close the bonnet manually.

- Lower the bonnet to a height of around 20 cm and then allow it to fall, applying a little force as you let it go.
- If the bonnet can still be lifted slightly, open the bonnet again and close it with a little more force until it engages correctly.

Engine oil

CHECKING THE ENGINE OIL LEVEL USING THE DRIVER DISPLAY

Requirements:

- The engine has been warmed up.
- The vehicle is parked on a level surface.
- The engine is running at idle speed.
- The bonnet is closed.

Determining the engine oil level can take up to 30 minutes with a normal driving style, and even longer with an active driving style.

Driver display:

→ Service

The engine oil level is shown.

ONE OF THE FOLLOWING MESSAGES WILL APPEAR ON THE DRIVER DISPLAY:

- Engine oil level Measuring now...: the engine oil level cannot be determined yet.

► Repeat the request after a maximum of 30 minutes of driving.

- Engine oil level OK and the bar display for indicating the engine oil level on the driver display is green and is between "min" and "max": the engine oil level is OK.

- Engine oil level Top up 1,0 l and the bar display for indicating the engine oil level on the driver display is yellow and is below "min":

► Add 1 litre of engine oil.

- Engine oil level Reduce and the bar display for indicating the engine oil level on the driver display is yellow and is above "max":

► Drain off any excess engine oil that has been added. Consult a qualified specialist workshop in this regard.

- For engine oil level, switch on vehicle

► Switch on the vehicle to check the engine oil level.

- Engine oil level System inoperative: The oil level sensor is defective or not connected.

► Consult a qualified specialist workshop.

- Engine oil level System currently inoperative

► Close the bonnet.

TOPPING UP ENGINE OIL

DANGER
Risk of fatal injuries when carrying out maintenance work during the charging process

During the charging process, the high-voltage on-board electrical system is under high voltage.

► Do not perform any maintenance work during the charging process.

WARNING
Risk of burns when opening the bonnet

IF YOU OPEN THE BONNET IN THE EVENT OF AN OVERHEATED ENGINE OR FIRE IN THE ENGINE COMPARTMENT, THE FOLLOWING SITUATIONS MAY OCCUR:

- You may come into contact with hot gases.
- You may come into contact with other escaping hot operating fluids.

► Before opening the bonnet, allow the engine to cool down.

► In the event of a fire in the engine compartment, keep the bonnet closed and call the fire service.

WARNING
Risk of injury due to moving parts

Components in the engine compartment may continue to run or start unexpectedly even when the drive system is switched off.

Observe the following if you must open the bonnet:

► Switch off the vehicle.

► Never touch the danger zones surrounding moving components, e.g. the rotation area of the fan.

► Remove jewellery and watches.

► Keep items of clothing and hair away from moving parts.

WARNING
Risk of burns from hot component parts in the engine compartment

Certain component parts in the engine compartment can be very hot, e.g. the engine, the cooler and parts of the exhaust system.

► Allow the engine to cool down and only touch component parts described in the following.

WARNING
Risk of fire and injury from engine oil

If engine oil comes into contact with hot component parts in the engine compartment, it may ignite.

► Make sure that no engine oil is spilled next to the filler opening.

► Allow the engine to cool off and thoroughly clean the engine oil from component parts before starting the vehicle.

NOTE
Engine damage caused by an incorrect oil filter, incorrect oil or additives

- Do not use engine oils or oil filters which do not correspond to the specifications explicitly prescribed for the service intervals.
- Follow the instructions on the service interval display for changing the engine oil and observe the prescribed change intervals.
- Do not use additives.

NOTE
Damage caused by topping up too much engine oil

Excess engine oil can damage the engine or catalytic converter.

- Have excess engine oil removed at a qualified specialist workshop.

Depending on driving style, the vehicle will consume up to 0.8 litres of oil per 1000 km. The oil consumption may also be higher than this when the vehicle is new or if you frequently drive at high engine speeds.

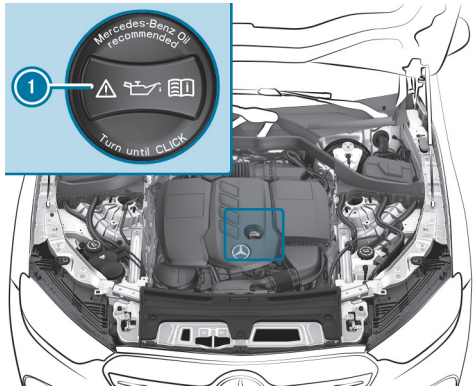

- Turn cap (1) anti-clockwise and remove it.
- Top up the engine oil.
- Replace cap (1) and turn it clockwise until it engages.
- Check the oil level again (⟶ page 43).

Checking the coolant level

DANGER
Risk of fatal injuries when carrying out maintenance work during the charging process

During the charging process, the high-voltage on-board electrical system is under high voltage.

- Do not perform any maintenance work during the charging process.

WARNING
Risk of burns when opening the bonnet

IF YOU OPEN THE BONNET IN THE EVENT OF AN OVERHEATED ENGINE OR FIRE IN THE ENGINE COMPARTMENT, THE FOLLOWING SITUATIONS MAY OCCUR:

- You may come into contact with hot gases.
- You may come into contact with other escaping hot operating fluids.

► Before opening the bonnet, allow the engine to cool down.

► In the event of a fire in the engine compartment, keep the bonnet closed and call the fire service.

WARNING
Risk of injury due to moving parts

Components in the engine compartment may continue to run or start unexpectedly even when the drive system is switched off.

Observe the following if you must open the bonnet:

► Switch off the vehicle.

► Never touch the danger zones surrounding moving components, e.g. the rotation area of the fan.

► Remove jewellery and watches.

► Keep items of clothing and hair away from moving parts.

WARNING
Risk of burns from hot component parts in the engine compartment

Certain component parts in the engine compartment can be very hot, e.g. the engine, the cooler and parts of the exhaust system.

► Allow the engine to cool down and only touch component parts described in the following.

WARNING
Risk of scalding from hot coolant

If you open the cap, you could scald yourself.

► Allow the engine to cool down before opening the cap.

► When opening the cap, wear protective gloves and safety glasses.

► Open the cap slowly to release pressure.

► Have the coolant checked or refilled only at a qualified specialist workshop.

Topping up the windscreen washer system

DANGER
Risk of fatal injuries when carrying out maintenance work during the charging process

During the charging process, the high-voltage on-board electrical system is under high voltage.

- ► Do not perform any maintenance work during the charging process.

WARNING
Risk of burns when opening the bonnet

IF YOU OPEN THE BONNET IN THE EVENT OF AN OVERHEATED ENGINE OR FIRE IN THE ENGINE COMPARTMENT, THE FOLLOWING SITUATIONS MAY OCCUR:

- You may come into contact with hot gases.
- You may come into contact with other escaping hot operating fluids.

- ► Before opening the bonnet, allow the engine to cool down.
- ► In the event of a fire in the engine compartment, keep the bonnet closed and call the fire service.

WARNING
Risk of injury due to moving parts

Components in the engine compartment may continue to run or start unexpectedly even when the drive system is switched off.

Observe the following if you must open the bonnet:

- ► Switch off the vehicle.
- ► Never touch the danger zones surrounding moving components, e.g. the rotation area of the fan.
- ► Remove jewellery and watches.
- ► Keep items of clothing and hair away from moving parts.

WARNING
Risk of burns from hot component parts in the engine compartment

Certain component parts in the engine compartment can be very hot, e.g. the engine, the cooler and parts of the exhaust system.

- ► Allow the engine to cool down and only touch component parts described in the following.

WARNING
- Risk of fire and injury due to windscreen washer concentrate

Windscreen washer concentrate is highly flammable. It could ignite if it comes into contact with hot engine component parts or the exhaust system.

- Make sure that no windscreen washer concentrate spills out next to the filler opening.

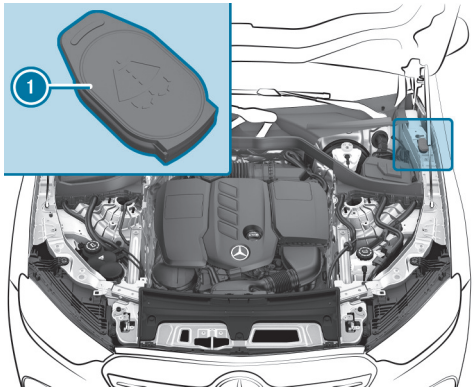

- Open the cap (1) by pulling on the front protrusion.
- Top up the washer fluid.

Keeping the air/water duct free

- Keep the area between the bonnet and the windscreen free of deposits, e.g. ice, snow or leaves.

Cleaning and care

Information on washing the vehicle in a car wash

WARNING
Risk of an accident due to reduced braking power after washing the vehicle

Braking efficiency is reduced after washing the vehicle.

- ► After the vehicle has been washed, brake carefully while paying attention to the traffic conditions until braking power has been fully restored.

NOTE
Damage from automatic braking

THE VEHICLE WILL BRAKE AUTONOMOUSLY IN CERTAIN SITUATIONS IF THE FOLLOWING FUNCTIONS ARE SWITCHED ON:

- Active Brake Assist
- Active Distance Assist DISTRONIC
- HOLD function
- Active Parking Assist

To avoid damage to the vehicle, switch these systems off e.g. before towing it or in a car wash.

NOTE
Damage due to unsuitable car wash

- ► Before driving into a car wash make sure that the car wash is suitable for the vehicle dimensions.
- ► Ensure there is sufficient ground clearance between the underbody and the guide rails of the car wash.
- ► Ensure that the clearance width of the car wash, in particular the width of the guide rails, is sufficient.

TO AVOID DAMAGE TO YOUR VEHICLE WHEN USING A CAR WASH, ENSURE THE FOLLOWING BEFOREHAND:

- Active Distance Assist DISTRONIC is switched off.
- The HOLD function is switched off.
- The 360° camera or the reversing camera is switched off.
- The vehicle is locked and the door handles retracted.
- The side windows and sliding sunroof are completely closed.
- The outside mirrors are retracted.
- The blower for the ventilation and heating is switched off.
- The windscreen wiper switch is in position 0.
- The key is at least 6 m away from the vehicle. Otherwise, the boot lid or a door could open unintentionally.

  This also applies to the Digital Vehicle Key.
- For car washes with conveyor systems:
  - Neutral N is engaged.
  - The vehicle is locked from the inside.
- Do not make any hand movements in the area of the overhead control panel or deactivate the Sliding sunroof and roller sunblind option in the settings for the MBUX interior assistant (⟶ page 584).

ⓘ Removing the wax from the windscreen and the wiper rubber after washing the vehicle will help to avoid smearing and reduce wiper noise.

Car wash mode

In car wash mode, the vehicle is prepared for entering a car wash. Car wash mode can be activated up to a speed of 20 km/h (⟶ page 728).

WHEN CAR WASH MODE IS ACTIVATED, THE CAR WASH MODE ACTIVE **MESSAGE WILL APPEAR ON THE DRIVER DISPLAY. THE FOLLOWING ADJUSTMENTS WILL BE MADE:**

- The outside mirrors will be folded in.
- To prevent the windscreen washer system from starting up automatically, the rain sensor will be deactivated.
- Air-recirculation mode will be activated.
- The windows and the sliding sunroof will be closed if necessary.
- Parking Assist PARKTRONIC will be deactivated.
- Active Brake Assist will be deactivated if necessary.
- **Vehicles with 360° camera:** the front image will be displayed after approximately eight seconds.
- **Vehicles with HANDS-FREE ACCESS:** kick detection will be deactivated.

If one of the settings cannot be selected, this is displayed by a X behind the respective setting.

Pressing Switch off will end car wash mode. Car wash mode will automatically be deactivated above a speed of 20 km/h.

You can also switch off car wash mode via the MBUX multimedia system (⟶ page 728).

THE FOLLOWING SETTINGS WILL BE RESET WHEN CAR WASH MODE IS DEACTIVATED:

- The outside mirrors will be folded out.

- The rain sensor will be activated.
- Air-recirculation mode will be deactivated.
- The windows and the sliding sunroof will remain closed.
- Parking Assist PARKTRONIC will be reset to the previously selected setting.
- Active Brake Assist will be activated if necessary.
- **Vehicles with 360° camera:** the front image will be deactivated at a speed above 18 km/h.
- **Vehicles with HANDS-FREE ACCESS:** kick detection will be activated.

Activating/deactivating car wash mode

Requirements:

- The vehicle is stationary.
- The vehicle is switched on.

Multimedia system:

Settings » Vehicle » Driving

ACTIVATING CAR WASH MODE

- ► Select Car wash mode.
- ► Select Activate.

If one of the settings cannot be selected, this will be shown by a [X] next to the respective setting.

ⓘ For an overview of the settings made when you activate car wash mode (⟶ page 44).

DEACTIVATING CAR WASH MODE

- ► Select Switch off.

  The car wash mode settings will be reset.

ⓘ Car wash mode will be automatically deactivated as soon as your speed exceeds 20 km/h.

Information on using a high-pressure cleaner

⚠ **WARNING**
Risk of an accident when using high-pressure cleaners with round-spray nozzles

The water jet can cause externally invisible damage.

Components damaged in this way may unexpectedly fail.

- ► Do not use a high-pressure cleaner with round-spray nozzles.
- ► Have damaged tyres or chassis parts replaced immediately.

TO AVOID DAMAGE TO YOUR VEHICLE, OBSERVE THE FOLLOWING WHEN USING A HIGH-PRESSURE CLEANER:

- Keep the key at least 3 m away from the vehicle. Otherwise, the boot lid or a door could open unintentionally.

  This also applies to the Digital Vehicle Key.
- Maintain a distance of at least 30 cm to the vehicle.
- **Vehicles with decorative films:** Parts of your vehicle are covered with a decorative film. Maintain a distance of at least 70 cm between the film-

covered parts of the vehicle and the nozzle of the high-pressure cleaner. Move the nozzle of the high-pressure cleaner around while cleaning. The water temperature of the high-pressure cleaner must not exceed 60°C.

- Observe the information on the correct distance in the equipment manufacturer's operating instructions.
- Do not direct the nozzle of the high-pressure cleaner directly at sensitive parts, e.g. tyres, gaps, electrical components, batteries, illuminants or louvres.

Washing the vehicle by hand

NOTE
Engine damage due to water ingress

► Take care not to point the water jet directly towards the air inlet grille below the bonnet.

Observe the relevant legal requirements (forexample in some countries, washing by hand is permitted only in specially designated wash bays).

► Use a mild cleaning agent, e.g. car shampoo.

► Do not use acidic cleaning agents.

► Do not use any aggressively alkaline cleaning agents.

► Wash the vehicle with lukewarm water using a soft car sponge. Do not expose the vehicle to direct sunlight when washing.

► Carefully hose the vehicle off with water and dry using a chamois.

Observe the notes on the care of car parts (⟶ page 731).

Notes on care of the paintwork/matt finish paintwork

To avoid damaging the paintwork and interfering with the driving assistance systems, please observe the following information:

PAINT

- Insect remnants: soak with insect remover and then rinse off the treated areas.
- Bird droppings: soak with water and then rinse off the treated areas.
- Tree resin, oils, fuels and greases: remove by rubbing gently with a cloth soaked in petroleum ether or lighter fluid.
- Coolant and brake fluid: remove with a damp cloth and clean water.
- Tar stains: apply tar remover.
- Wax: apply silicone remover.
- Do not attach stickers, plastic film or similar materials. Always have a qualified specialist workshop attach plastic films to the bumper.
- Remove dirt immediately, where possible. Do not use acid solutions and acidic cleaners.
- Do not use any aggressive alkali cleaners.

MATT FINISH

- Only use care products approved for Mercedes-Benz.
- Do not attach stickers, plastic film or similar materials. Always have a qualified specialist workshop attach plastic films to the bumper.
- Do not polish the vehicle or light-alloy wheels.
- Only use car washes that comply with the latest engineering standards.
- Do not use car wash programmes with a final hot wax treatment.
- Do not use paint cleaners, buffing or polishing products or gloss preservers, e.g.wax.

IN THE EVENT OF PAINTWORK SUSTAINING DAMAGE:

- Always have paintwork repairs carried out at a qualified specialist workshop.
- Ensure correct functioning of the radar sensors (⟶ page 412).

Notes on cleaning decorative foils

Observe the "Notes on paintwork / matt finish paintwork care" (⟶ page 729). They also apply to matt decorative films.

Observe the notes on cleaning decorative films to avoid damage.

CLEANING

- When cleaning with the high-pressure cleaner, maintain a distance of at least 70 cm between the foil-covered parts of the vehicle and the nozzle of the high-pressure cleaner.
- For cleaning, use plenty of water and a mild cleaning agent without additives or abrasive substances (e.g. a car shampoo approved for Mercedes-Benz).
- Do not use acidic cleaning agents.
- Remove dirt as soon as possible. Avoid rubbing too hard in order not to damage the decorative film irreparably.
- If there is dirt on the finish or if the decorative film is dull: use the paint cleaner recommended and approved for Mercedes-Benz.
- Insect remains: Soak with insect remover and rinse off the treated areas afterwards.
- Bird droppings: Soak with water and rinse off afterwards.
- To prevent water stains, dry a film-wrapped vehicle with a soft, absorbent cloth after every car wash.

AVOIDING DAMAGE TO THE DECORATIVE FILM

- The service life and colouring of decorative films are impaired by:
  - Sunlight
  - Temperature (e.g. hot air blower)
  - Weather conditions
  - Stone chippings and dirt
  - Chemical cleaning agents
  - Oily products
- Do not use polish on matt decorative film. Polishing will have the effect of shining the film-wrapped surface.
- Do not treat matt or structured decorative films with wax. Permanent stains may occur.

Scratches, corrosive deposits, areas affected by corrosion and damage caused by incorrect care cannot always be completely repaired. In this case, contact a qualified specialist workshop.

You can obtain more information on care and cleaning agents from the manufacturer.

In the case of film-wrapped surfaces, visual differences may occur between the surfaces that were not protected by a decorative film after a decorative film has been removed.

ⓘ Have work or repairs to decorative films carried out at a qualified specialist workshop (e.g. at a Mercedes-Benz Service Centre).

Information on window films

NOTE
Damage to electronic components due to excess fluids

When window films have been retrofitted, fluids such as cleaning agents or water may run down and get behind trim parts of the vehicle interior and cause damage to electronic components.

- ► Use cleaning agents as sparingly as possible.
- ► Immediately absorb any excess fluids.

Notes on cleaning and care of vehicle parts

WARNING
Risk of entrapment if the windscreen wipers are switched on while the windscreen is being cleaned

If the windscreen wipers are set in motion while you are cleaning the windscreen or wiper blades, you can be trapped by the wiper arm.

- ► Always switch off the windscreen wipers and the vehicle before cleaning the windscreen or wiper blades.

NOTE
Damage due to use of acidic cleaning agents

- ► Do not use acidic cleaning agents. Otherwise, the surfaces could be damaged.

To avoid damage to the vehicle, observe the notes on cleaning and care of the following car parts:

WINDOWS

NOTE
Damage to electronic components due to excess fluids

When cleaning the windows from the inside, fluids such as cleaning agents or water may run down and get behind trim parts of the vehicle interior and cause damage to electronic components.

- ► Use cleaning agents as sparingly as possible.
- ► Immediately absorb any excess fluids.

- Clean the windows on the inside and outside with a damp cloth and with a cleaning agent recommended for Mercedes-Benz.
- Do not use dry cloths or abrasive or solvent-based cleaning agents to clean the insides of windows.

After changing the wiper blades or treating the vehicle with wax, clean the windscreen thoroughly with cleaning agents recommended for Mercedes-Benz. Failure to observe the application instructions may result in damage, smear marks or glare.

Remove external misting or dirt on the windscreen in front of the multifunction camera. Otherwise, driving systems and driving safety systems may become impaired or unavailable (⟶ page 412).

WHEELS AND RIMS

- Use water and acid-free wheel cleaners.
- Do not use acidic wheel cleaners to remove brake dust. This could damage wheel bolts and brake components.
- Always use neutral wheel cleaners which have been approved by Mercedes-Benz for light-alloy wheels. Treatment times of more than ten minutes are not permissible.
- To avoid corrosion of the brake discs and brake linings, drive the vehicle for a few minutes after cleaning before parking up. The brake discs and brake linings will warm up and dry out.

WIPER BLADES

NOTICE
Risk of damage to the wiper blades due to incorrect cleaning

The wiper blades are coated with graphite. This coating may be removed or become damaged during cleaning.

As a consequence, wiping quality and performance could be impaired and may result in the wipers producing noises.

► To protect the coating, do not clean the wiper blades.

► If the wiper blades are very dirty, they can be cleaned with a soft, damp cloth. To do this, gently pull the cloth over the wiper lip with minimal pressure.

EXTERIOR LIGHTING

- Clean the lenses with a wet sponge and a mild cleaning agent (e.g.car shampoo).
- Only use cleaning agents or cleaning cloths that are suitable for plastic lenses.

VEHICLE SOCKET (HIGH-VOLTAGE BATTERY)

- Use clean water and a soft cloth to clean the vehicle socket.
- Do not use high-pressure cleaners or cleaning agents (suchas soap).

SENSORS

- Clean the sensors in the front and rear sections of the vehicle with car shampoo, plenty of water and a soft cloth (⟶ page 412).
- When using a high-pressure cleaner, maintain a minimum distance of 30 cm.

CAMERAS

- Open the camera cover with the multimedia system (⟶ page 478).
- Use clean water and a soft cloth to clean the camera lenses.
- Do not use a high-pressure cleaner.

Remove external misting or dirt on the windscreen in front of the multifunction camera. Otherwise, driving systems and driving safety systems may become impaired or unavailable (⟶ page 412).

TRAILER HITCH

- Observe the notes on care in the manufacturer's instruction manual for the trailer hitch.
- Do not clean the ball neck with a high-pressure cleaner or solvent.
- Remove traces of rust on the ball (e.g.with a wire brush).
- Remove dirt with a lint-free cloth.
- After cleaning, lightly oil or grease the ball head.

Before using trailers with an anti-swerve coupling, refer to the manufacturer's instruction manual.

Notes on interior care

WARNING
Risk of injury from plastic parts breaking off after the use of solvent-based care products

Care and cleaning products containing solvents can cause surfaces in the cockpit to become porous. When the airbags are deployed, plastic parts may break away.

► Do not use any care or cleaning products containing solvents to clean the cockpit.

WARNING
Risk of injury or fatal injuries from bleached seat belts

Bleaching or dyeing seat belts can severely weaken them.

This can, for example, cause seat belts to tear or fail in an accident.

► Never bleach or dye seat belts.

NOTE
Property damage due to disinfectants

The interior includes a number of sensitive surfaces such as displays, plastics and leather.

Disinfectants can contain alcohol and other substances that penetrate and damage surfaces. Technology behind buttons and displays can also be damaged.

► Do not use disinfectant on interior surfaces.

To avoid damage to the vehicle, observe the following notes on cleaning and care:

SEAT BELTS
- Clean with lukewarm, soapy water.
- Do not use chemical cleaning agents.
- Do not dry by heating to more than 80 °C or exposing to direct sunlight.

DISPLAY
- Switch off the display and allow it to cool.
- Clean the surface carefully with a microfibre cloth and a suitable display care product (TFT LCD).
- Do not use any other agents.

HEAD-UP DISPLAY
- Clean with a soft, non-static, lint-free cloth.
- Do not use cleaning agents.

PLASTIC TRIM
- Clean with a damp microfibre cloth.

- For heavy soiling, use a cleaning agent recommended for Mercedes-Benz.
- Do not attach stickers, films or similar materials.
- Do not allow cosmetics, insect repellent or sun cream to come into contact with the plastic trim.

GENUINE WOOD AND TRIM ELEMENTS

- Clean with a microfibre cloth.
- Black piano-lacquer look: clean with a damp cloth and soapy water.
- For heavy soiling, use a cleaning agent recommended for Mercedes-Benz.
- Do not use solvent-based cleaning agents, polishes or waxes.

HEADLINER

- Clean with a brush or dry shampoo.

CARPET AND BOOT

- Use a carpet and textile cleaning agent recommended for Mercedes-Benz.

STEERING WHEEL

NOTICE
Damage resulting from the use of improper cleaning agents

► Observe the following information regarding cleaning of the steering wheel. Otherwise the surface material could sustain damage.
  - Do not use oil-based cleaning and care products.
  - Do not use solvent-based cleaning agents, suchas tar remover or wheel cleaners.
  - Do not use a microfibre cloth.
  - Do not allow to become wet when cleaning.

- Clean the entire steering wheel with a damp cotton cloth, and 1% soap solution as required.
- Do not spot clean.
- Use only cleaning agents and care products on the surface material which have been approved for Mercedes-Benz.
  - Microfibre surface material: use commercially approved cleaning agents and care products specifically for microfibres.
  - Leather/imitation leather surfaces: use commercially approved cleaning agents and care products specifically for leather.

Leather is a natural product. It has natural surface characteristics, suchas differences in structure, marks caused by growth and injury or subtle colour differences. These surface characteristics are particular to leather, and are not material defects. Leather is also subject to a natural ageing process, which changes the surface characteristics.

GENUINE LEATHER SEAT COVERS

- Vacuum up any uncleanliness, suchas crumbs or dust and then clean the seat covers with a damp cotton cloth and wipe down with a dry cloth. Regularly clean the seat covers.
- For heavy soiling, use an aftercare leather care agent recommended for Mercedes-Benz.
- Leather care: use a leather care agent recommended for Mercedes-Benz.
- Do not use a microfibre cloth.
- Do not allow the leather to become too damp.
- Do not use oil-based cleaning and care products.

ⓘ Leather is a natural product. It has natural surface characteristics, suchas differences in structure, marks caused by growth and injury or subtle colour differences. These surface characteristics are particular to leather, and are not material defects. Leather is also subject to a natural ageing process, which changes the surface characteristics.
Waves or wrinkling in the seat cover may occur due to the stress on the seat; this is caused by the natural leather material.
Regular cleaning and care of the leather will reduce dirt build-up, wear marks and ageing damage and thus significantly extend its life span. Clothing that can leave stains (e.g.jeans) may discolour the leather.

DINAMICA SEAT COVERS

- Vacuum up any uncleanliness, suchas crumbs or dust and then use a damp cloth to clean.
- Do not use a microfibre cloth.

IMITATION LEATHER SEAT COVERS

- Vacuum up any uncleanliness, suchas crumbs or dust and then use a damp cotton cloth and a 1% soap solution to clean the entire seat cover. Do not spot clean.
- Use cleaning and care products recommended for Mercedes-Benz.
- Do not use a microfibre cloth.
- Do not use oil-based cleaning and care products.

CLOTH SEAT COVERS

- Vacuum up dirt suchas crumbs or dust and then use a damp microfibre cloth and a 1% soap solution to clean the entire seat cover. Do not spot clean.
- Use cleaning and care products recommended for Mercedes-Benz.
- Do not use oil-based cleaning and care products.

Back to Contents

Breakdown assistance

This interactive PDF works like a website – tap or click a button to jump straight to where you want to go.
You can return here at any time via the navigation bar at the top left.

Emergency
Flat tyre
Battery (vehicle)
Tow-starting or towing away
Electrical fuses

Emergency

Removing the safety vest

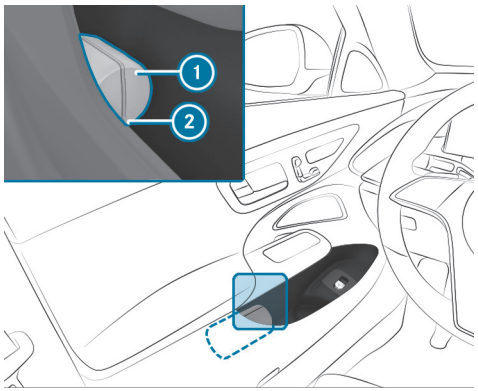

There is a safety vest stowage recess in the door stowage compartments of all doors for storing a safety vest.

- To remove: pull out the safety vest bag (1) using the loop (2).
- Open the safety vest bag (1) and take out the safety vest.
- To replace: fold the safety vest, roll it up and insert it into the safety vest bag (1).
- Slide the safety vest bag (1) along the underside of the armrest into the safety vest stowage recess. Ensure that the loop (2) remains hanging out so that it is easy to grasp.

Remove the packaging film from a new safety vest before sliding it into the safety vest stowage recess. Otherwise, it may slide out unintentionally or the packaging may hinder its removal.
Observe the legal requirements for the individual countries.

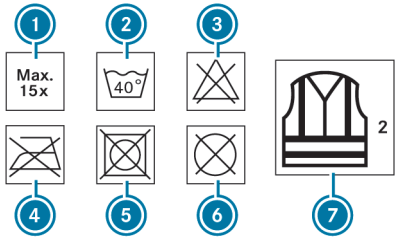

1. Maximum number of washes
2. Maximum wash temperature
3. Do not bleach
4. Do not iron
5. Do not tumble dry
6. Do not dry clean
7. Class 2 safety vest

The requirements defined by the legal standard are only fulfilled if the safety vest is the correct size and is fully closed.

REPLACE THE SAFETY VEST IN THE FOLLOWING CASES:

- The reflective strips are damaged or dirty.

- The maximum permissible number of washes is exceeded.
- The fluorescence property diminishes, e.g.due to permanent exposure to sunlight.

DISPOSE OF THE SAFETY VEST IN AN ENVIRONMENTALLY-FRIENDLY WAY:

- Please contact your local waste disposal company.

Warning triangle

REMOVING THE WARNING TRIANGLE

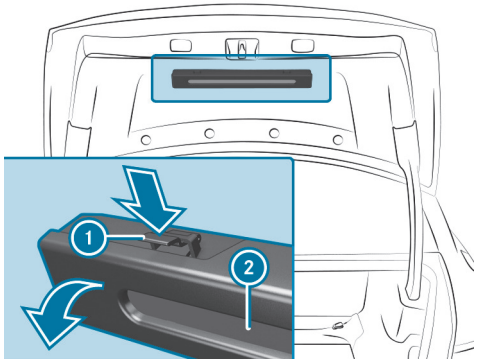

► Push both sides of the warning triangle holder (1) in the direction indicated by the arrow and open.

► Remove the warning triangle (2).

The warning triangle is located in the boot lid.

SETTING UP THE WARNING TRIANGLE

► Fold the side reflectors upwards to form a triangle and attach using the upper snap fastener.

► Fold the legs down and out to the side.

First-aid kit overview

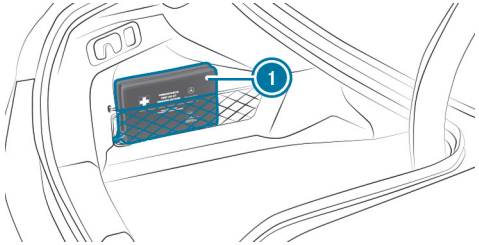

The first-aid kit (1) is located in the boot on the left in the stowage net.

Depending on the respective vehicle version, the first-aid kit (1) may be located in other positions in the boot.

Removing the fire extinguisher

WARNING
Risk of accident due to an incorrectly secured fire extinguisher in the driver's footwell

A fire extinguisher may impede pedal travel or block a depressed pedal.

This jeopardises the operating and road safety of the vehicle.

The fire extinguisher can be flung around and injure the driver or other vehicle occupants.

- Always store and secure the fire extinguisher in the bracket.
- Do not remove the fire extinguisher while driving.

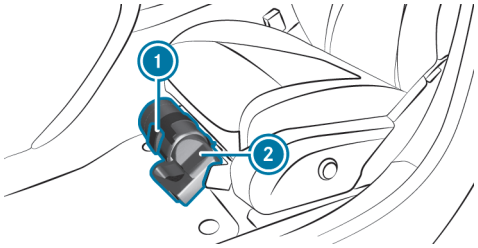

- Pull the tab (1) upwards.
- Fold the tab (1) down.
- Remove the fire extinguisher (2).

Flat tyre

Notes on flat tyres

WARNING
Risk of accident due to a flat tyre

A flat tyre severely affects the driving characteristics as well as steering and braking.

tyres that do not feature run-flat characteristics:

- Do not drive on with a flat tyre.
- Change the flat tyre immediately with an emergency spare wheel or spare wheel. Alternatively, consult a qualified specialist workshop.

Run-flat tyres:

- Observe the information and warning notes on MOExtended tyres (run-flat tyres).

IN THE EVENT OF A FLAT TYRE, THE FOLLOWING OPTIONS ARE AVAILABLE DEPENDING ON YOUR VEHICLE'S EQUIPMENT:

- **Vehicles with a TIREFIT kit:** you can seal the tyre so that it is possible to continue the journey for a short period of time. To do this, use the TIREFIT kit (⟶ page 741).
- **Vehicles with Mercedes-Benz Support:** in the event of a breakdown, you can make a breakdown call via the overhead control panel (⟶ page 674).
- **All vehicles:** change the wheel (⟶ page 782).

The emergency spare wheel is only available in certain countries (⟶ page 789).

TIREFIT kit storage location

PLUG-IN HYBRID

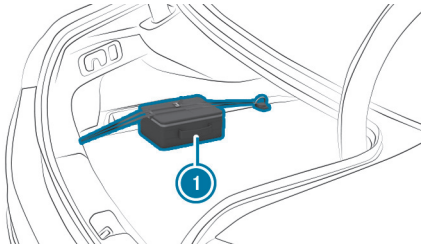

The TIREFIT kit (1) is located on the left-hand side of the boot upon delivery of the vehicle.

Not plug-in hybrid

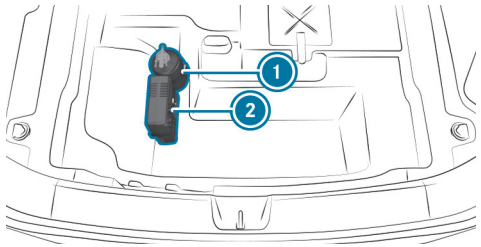

1 Tyre sealant bottle
2 Tyre inflation compressor

The TIREFIT kit is located under the boot floor upon delivery of the vehicle.

Depending on the vehicle version, the TIREFIT kit may be located in a different position in the boot.

DEPENDING ON THE RESPECTIVE POWER CATEGORY (LK), THE TYRE INFLATION COMPRESSOR WEIGHS AS FOLLOWS:

- LK2 – 12 V/15 A, 180 W, 0.9 kg

You can find information on the power category (LK) and/or electrical data on the back of the tyre inflation compressor.
The tyre inflation compressor is maintenance-free. In the event of a malfunction, please contact a qualified specialist workshop.

Using the TIREFIT kit

Requirements:

- The tyre sealant bottle and tyre inflation compressor are ready for use (⟶ page 75).
- The TIREFIT sticker is displayed.
- Gloves are at hand.

TIREFIT kit storage location: (⟶ page 75)

You can use TIREFIT tyre sealant to seal perforation damage of up to 4 mm, particularly on the tyre contact surface. The TIREFIT can be used at outside temperatures down to -20 °C.

WARNING
Risk of accident when using tyre sealant

The tyre sealant may be unable to seal the tyre properly, especially in the following cases:

- there are large cuts or punctures in the tyre (larger than damage previously mentioned)
- the wheel rims have been damaged
- after journeys with very low tyre pressure or with flat tyres

► Do not continue driving.

► Consult a qualified specialist workshop.

WARNING
Risk of injury and poisoning from tyre sealant

Tyre sealant is hazardous to health and causes irritation. Do not allow it to come into contact with your skin, eyes or clothing, and do not swallow it. Do not inhale any vapours. Keep the tyre sealant away from children.

Observe the following if you come into contact with the tyre sealant:

- Rinse off the tyre sealant from your skin using water immediately.
- If tyre sealant gets into your eyes, thoroughly rinse them using clean water immediately.
- If tyre sealant has been swallowed, thoroughly rinse out your mouth immediately and drink plenty of water. Do not induce vomiting and seek medical attention immediately.
- Change out of clothing which has come into contact with tyre sealant immediately.
- If an allergic reaction occurs, seek medical attention immediately.

NOTE
Overheating due to the tyre inflation compressor running too long

- Do not run the tyre inflation compressor for longer than ten minutes without interruption.

Comply with the manufacturer's safety notes on the sticker on the tyre inflation compressor.

Have the tyre sealant bottle replaced at a qualified specialist workshop every five years.

- Do not remove any foreign objects that have pierced the tyre.

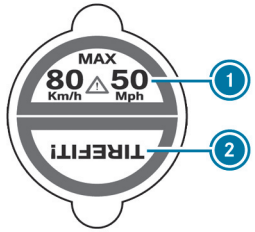

- Affix the part (1) of the TIREFIT sticker onto the driver display within the driver's field of vision.
- Affix the part (2) of the TIREFIT sticker near the valve on the wheel with the defective tyre.

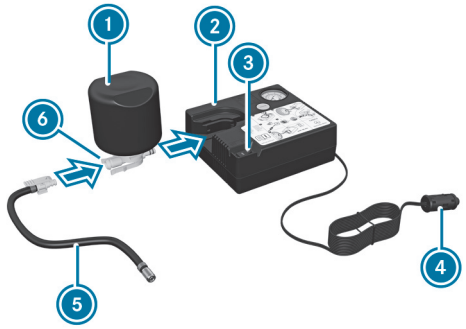

- Pull the plug (4) with cable and hose (5) out of the tyre inflation compressor housing.
- Push the plug of the hose (5) into the flange (6) of the tyre sealant bottle (1) until the plug engages.
- Insert the tyre sealant bottle (1) with the head pointing downwards into the recess (2) of the tyre inflation compressor.

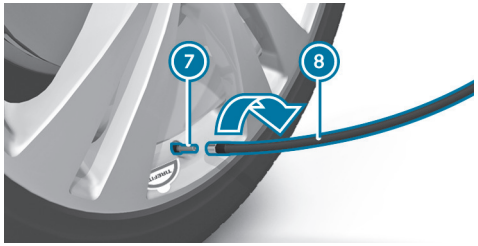

- Remove the valve cap from the valve (7) on the faulty tyre.
- Screw the filling hose (8) onto the valve (7).
- Insert the plug (4) into a 12-V-socket in your vehicle (⟶ page 272).
- Switch on the vehicle.
- Press the On/Off switch (3) on the tyre inflation compressor.

  The tyre inflation compressor is switched on. The tyre will be inflated. First, tyre sealant is pumped into the tyre. The pressure may briefly rise to approximately 500 kPa (5 bar/73 psi).

Do not switch off the tyre inflation compressor during this phase!

- Allow the tyre inflation compressor to run for a maximum of ten minutes.

  The tyre should then have reached a tyre pressure of at least 200 kPa (2.0 bar/29 psi).

If tyre sealant leaks out, ensure that the affected area is cleaned as quickly as possible. Ideally, use clean water.

If you get tyre sealant on your clothing, have it cleaned with perchloroethylene at a dry cleaner's as soon as possible.

IF, AFTER TEN MINUTES, A TYRE PRESSURE OF 200 KPA (2.0 BAR/29 PSI) IS NOT REACHED:

- Switch off the tyre inflation compressor.
- Unscrew the filling hose from the valve of the defective tyre.

Please note that tyre sealant may leak out when unscrewing the filling hose.

- Drive the vehicle forwards or in reverse very slowly for approximately 10 m.
- Inflate the tyre again.

  After a maximum of ten minutes, the tyre pressure should be at least 200 kPa (2.0 bar/29 psi).

WARNING
Risk of accident due to the specified tyre pressure not being attained

If the specified tyre pressure is not attained after the specified time, the tyre is too badly damaged. The tyre sealant cannot repair the tyre in this instance.

The braking and driving characteristics may be greatly impaired.

- Do not continue driving.
- Consult a qualified specialist workshop.

IF, AFTER TEN MINUTES, A TYRE PRESSURE OF 200 KPA (2.0 BAR/29 PSI) IS REACHED:

WARNING
Risk of accident from driving with sealed tyres

A tyre temporarily sealed with tyre sealant impairs the handling characteristics and is not suitable for higher speeds.

- Adapt your driving style accordingly and drive carefully.
- Do not exceed the maximum speed limit with a tyre that has been repaired using tyre sealant.

- Observe the maximum permissible speed of 80 km/h for a tyre sealed with tyre sealant.
- Affix the upper section of the TIREFIT sticker to the driver display in a location where it will be easily seen by the driver.

NOTE
Staining from leaking tyre sealant

After use, excess tyre sealant may leak out from the filling hose.

- Therefore, place the filling hose in the plastic bag that contained the TIREFIT kit.

ENVIRONMENTAL NOTE
Environmental pollution caused by environmentally irresponsible disposal

Tyre sealant contains pollutants.

- Have the tyre sealant bottle disposed of professionally, e.g. at a Mercedes-Benz Service Centre.

- Switch off the tyre inflation compressor.
- Unscrew the filling hose from the valve of the defective tyre.
- Stow the tyre sealant bottle and the tyre inflation compressor.
- Pull away immediately.
- Stop driving after approximately ten minutes and check the tyre pressure using the tyre inflation compressor.
  The tyre pressure should now be at least 130 kPa (1.3 bar/19 psi).

WARNING
Risk of accident due to the specified tyre pressure not being attained

If the specified tyre pressure is not reached, the tyre is too badly damaged. The tyre sealant cannot repair the tyre in this instance.

The braking and driving characteristics may be greatly impaired.

- Do not continue driving.
- Consult a qualified specialist workshop.

Countries with Mercedes-Benz Service24h: A sticker with the telephone number is affixed to the B-pillar on the driver's side, forexample.

- Correct the tyre pressure if it is still at least 130 kPa (1.3 bar/19 psi). For values, refer to the tyre pressure table on the fuel filler flap.
- **To increase the tyre pressure:** switch on the tyre inflation compressor.

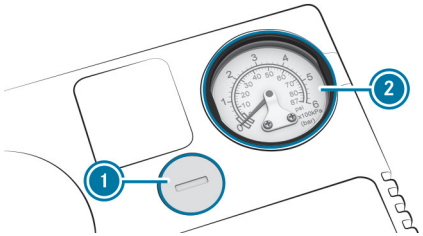

- **To reduce the tyre pressure:** press the pressure release button (1) next to the manometer (2).
- When the tyre pressure is correct, unscrew the filling hose from the valve of the sealed tyre.
- Screw the valve cap onto the valve of the sealed tyre.

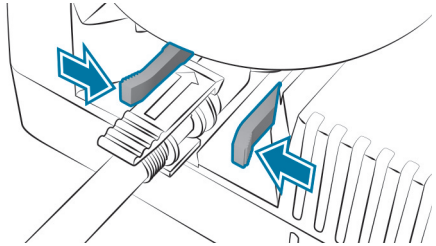

- Pull the tyre sealant bottle out of the tyre inflation compressor. Press the locking tabs on the yellow cap together to release.

  The filling hose remains on the tyre sealant bottle.
- Drive to the nearest qualified specialist workshop and have the tyre, tyre sealant bottle and filling hose replaced.

Battery (vehicle)

Notes on the 12 V battery

WARNING
Risk of an accident due to work carried out incorrectly on the battery

Work carried out incorrectly on the battery can, for example, lead to a short circuit. This can restrict functions relevant for safety systems and impair the operating safety of your vehicle.

YOU COULD LOSE CONTROL OF THE VEHICLE IN THE FOLLOWING SITUATIONS IN PARTICULAR:

- when braking
- in the event of abrupt steering manoeuvres and/or when the vehicle's speed is not adapted to the road conditions

► In the event of a short circuit or a similar incident, contact a qualified specialist workshop immediately.

► Do not drive on.

► Always have work on the battery carried out at a qualified specialist workshop.

- Further information on ABS (⟶ page 414)
- Further information on ESP® (⟶ page 415)

For safety reasons, Mercedes-Benz recommends that you only use batteries which have been approved for your vehicle by Mercedes-Benz.

ALL VEHICLES EXCEPT VEHICLES WITH A LITHIUM-ION BATTERY

WARNING
Risk of explosion due to electrostatic charge

Electrostatic charge can ignite the highly explosive gas mixture in the battery.

► To discharge any electrostatic charge that may have built up, touch the metal vehicle body before handling the battery.

The highly flammable gas mixture is created while the battery is charging and during starting assistance.

WARNING
Danger of chemical burns from the battery acid

Battery acid is caustic.

- ► Avoid contact with the skin, eyes or clothing.
- ► Do not lean over the battery.
- ► Do not inhale battery gases.
- ► Keep children away from the battery.
- ► Immediately rinse battery acid off thoroughly with plenty of clean water and seek medical attention immediately.

ALL VEHICLES

ENVIRONMENTAL NOTE
Environmental damage due to improper disposal of batteries

Batteries contain pollutants. It is illegal to dispose of them with the household rubbish.

- ► Dispose of batteries in an environmentally responsible manner. Take discharged batteries to a qualified specialist workshop or to a collection point for used batteries.

If it is necessary to disconnect the 12 V battery, consult a qualified specialist workshop.

Comply with safety notes and take protective measures when handling batteries.

Risk of explosion if the 12 V battery is used improperly.

Fire, open flame and smoking are prohibited when handling the battery. Avoid creating sparks.

Electrolyte or battery acid is corrosive. Avoid contact with your skin, eyes or clothing. Wear suitable protective clothing, in particular gloves, apron and face mask. Immediately rinse electrolyte or acid splashes off with clean water. Consult a doctor.

Do not place heavy objects on the surface of the battery or use the battery to support a person in any way.

Wear safety glasses.

Keep children away.

Observe this Owner's Manual.

IF YOU DO NOT INTEND TO USE THE VEHICLE OVER AN EXTENDED PERIOD OF TIME, OBSERVE THE FOLLOWING:

- Connect the battery to a battery charger approved by Mercedes-Benz or consult a qualified specialist workshop to disconnect the battery.

Notes on the 48 V battery

WARNING
Risk of an accident due to work carried out incorrectly on the battery

Work carried out incorrectly on the battery can, for example, lead to a short circuit. This can restrict functions relevant for safety systems and impair the operating safety of your vehicle.

YOU COULD LOSE CONTROL OF THE VEHICLE IN THE FOLLOWING SITUATIONS IN PARTICULAR:

- when braking
- in the event of abrupt steering manoeuvres and/or when the vehicle's speed is not adapted to the road conditions

► In the event of a short circuit or a similar incident, contact a qualified specialist workshop immediately.

► Do not drive on.

► Always have work on the battery carried out at a qualified specialist workshop.

- Further information on ABS (⟶ page 414)
- Further information on ESP® (⟶ page 415)

ENVIRONMENTAL NOTE
Environmental damage due to improper disposal of batteries

Batteries contain pollutants. It is illegal to dispose of them with the household rubbish.

► Li-ion Dispose of batteries in an environmentally responsible manner. Take discharged batteries to a qualified specialist workshop or to a collection point for used batteries.

Only have work on the 48 V battery carried out at a qualified specialist workshop.

Comply with safety notes and take protective measures when handling batteries.

Risk of explosion if the 48 V battery is used improperly.

The surface of the 48 V battery may be hot.

Fire, naked flame and smoking are prohibited when handling the battery. Avoid creating sparks.

Electrolyte or battery acid is corrosive. Avoid contact with your skin, eyes or clothing. Wear suitable protective clothing, in particular gloves, apron and face mask. Immediately rinse off splashes of electrolyte or acid with plenty of clean water. Consult a doctor.

Do not place heavy objects on the surface of the battery or use the battery to support a person in any way.

Do not perform any work on the battery. Always have any work on the battery carried out at a qualified specialist workshop. Do not

disconnect the battery yourself. Do not remove the battery yourself. Do not attempt to open the battery.

Keep children away.

Wear safety glasses.

Observe this Owner's Manual.

If you do not want to use the vehicle for a long period of time, consult a qualified specialist workshop.

Notes on the high-voltage battery

DANGER
Risk of fire and explosion from excessive internal pressure of the high-voltage battery

In the event of a vehicle fire, flammable gas can escape and ignite.

- Stop the charging process immediately in case of unusual odours, smoke or burn marks.
- Leave the danger zone immediately. Secure the danger zone at a sufficient distance.
- Call the fire service.

Observe the notes on charging the high-voltage battery (⟶ page 375).

Risk of explosion.

Fire, naked flames and smoking are prohibited when handling the battery. Avoid creating sparks.

Electrolyte or battery acid is corrosive. Avoid contact with the skin, eyes or clothing. Wear suitable protective clothing, in particular gloves, an apron and a face mask. Immediately rinse electrolyte or acid splashes off with clean water. Consult a doctor.

Wear safety glasses.

Keep children away.

Observe this Owner's Manual.

Notes on starting assistance and charging the 12 V battery

ALL VEHICLES
Always use the jump-start connection point in the engine compartment for charging the battery and starting assistance.

NOTICE
Damage to the battery due to overvoltage

When charging using a battery charger without a maximum charging voltage, the battery or the on-board electronics may be damaged.

- Only use battery chargers with a maximum charging voltage of 14.8 V.

WARNING
Risk of explosion due to the ignition of hydrogen gas

If there is a short circuit or sparks are created, there is a danger of hydrogen gas igniting when you charge the battery.

- Take care that the positive terminal of a connected battery does not come into contact with vehicle parts.
- Never place metal objects or tools on a battery.
- When connecting and disconnecting the battery, always observe the sequence of battery terminals described.
- During starting assistance, always take care to connect only battery terminals of identical polarity.
- During starting assistance, observe the sequence described for connecting and disconnecting the jump leads.
- Do not connect or disconnect the battery terminals with the engine running.

WARNING
Risk of explosion due to explosive mixture of gases

An explosive mixture of gases can escape from the battery during charging and starting assistance.

- Fire, naked flames, smoking and creating sparks must be avoided.
- Make sure there is adequate ventilation.
- Do not stand over the battery.

WARNING
Risk of explosion from a frozen battery

A discharged battery may freeze at temperatures slightly above or below freezing point.

During starting assistance or battery charging, battery gas can be released.

- Always allow a battery to thaw before charging it or performing starting assistance.

If the indicator/warning lamps in the driver display do not light up at low temperatures, the discharged battery is very likely frozen. In this case you may neither jump-start the vehicle nor charge the battery.

The service life of a defrosted battery may be drastically shortened. The starting behaviour may deteriorate, in particular at low temperatures.

It is recommended to have a defrosted battery checked at a qualified specialist workshop.

PLUG-IN HYBRID
If your vehicle has been started with starting assistance, it may not be possible to use the electric drive for approximately 30 minutes.

Starting assistance is not considered to be a normal operating status.

ALL VEHICLES

NOTE
Damage caused by numerous or extended attempts to start the engine

Numerous or extended attempts to start the engine may damage the catalytic converter due to non-combusted fuel.

► Avoid numerous and extended attempts to start the engine.

OBSERVE THE FOLLOWING POINTS DURING STARTING ASSISTANCE AND WHEN CHARGING THE BATTERY:

- Only use undamaged jump leads/charging cables with a sufficient cross-section and insulated terminal clamps.
- Uninsulated parts of the terminal clamps must not come into contact with other metal parts as long as the jump leads/charging cables are connected to the battery/the jump-start connection point.
- The jump leads/charging cables must not touch any parts which may move when the engine is running.
- Make sure that neither you nor the battery are electrostatically charged.
- Keep away from fire and naked flames.
- Do not stand over the battery.

ALSO OBSERVE THE FOLLOWING POINTS WHEN CHARGING THE BATTERY:

- Only use chargers tested and approved for Mercedes-Benz.
- Read the operating instructions for the charger, then charge the battery.

ALSO NOTE THE FOLLOWING POINTS DURING STARTING ASSISTANCE:

- Starting assistance may only be provided using vehicles, batteries or other jump start devices with a nominal voltage of 12 V.
- The vehicles must not touch each other.
- **Vehicles with a petrol engine:** jump-start the vehicle only when the engine and exhaust system are cold.

Starting assistance and charging the 12 V battery

PREPARING STARTING ASSISTANCE/CHARGING

► Secure the vehicle by applying the electric parking brake.

► Switch the transmission to position P.

► Switch off the vehicle and all electrical consumers.

► Open the bonnet.

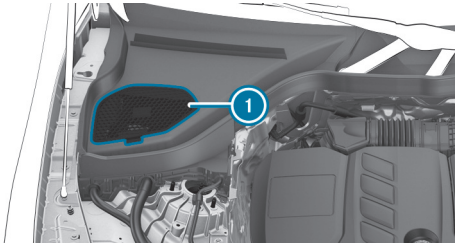

- Open cover (1) of the jump-start connection point.

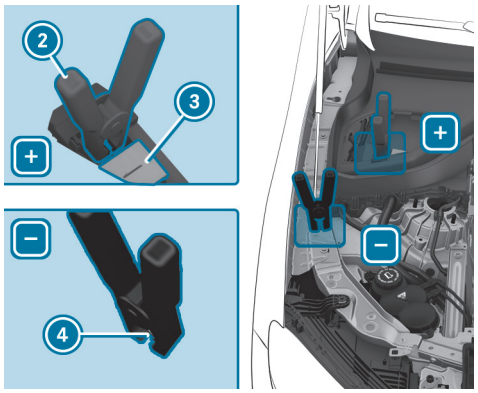

- Open cover (3) of positive contact (2) of the jump-start connection point.

STARTING ASSISTANCE

- Connect positive contact (2) on your vehicle to the positive terminal of the donor battery using the jump lead. Always begin with positive clamp (2) on your own vehicle first.
- Start the engine of the donor vehicle and run it at idle speed.
- Connect the negative terminal of the donor battery to earth point (4) of your vehicle using the jump lead. Begin with the donor battery first.
- Start the engine of your own vehicle.
- Let the engines run for several minutes.
- Before disconnecting the jump leads, switch on an electrical consumer in your own vehicle, e.g. the rear window heater or the lighting.

When the starting assistance procedure is complete:

- First, remove the jump leads from earth point (4) and the negative terminal of the donor battery, then from positive contact (2) and the positive terminal of the donor battery. Begin each time with the contacts on your own vehicle first.
- After removing the jump leads, close cover (3) of positive contact (2).
- Close cover (1).

If your vehicle has been started with starting assistance, it may not be possible to use the electric drive for approximately 30 minutes.

Further information can be obtained at a qualified specialist workshop.

CHARGING

- Connect positive contact (2) of the vehicle to the positive terminal of the charger using the charging cable. Always begin with positive contact (2) of the vehicle.
- Connect the negative terminal of the charger and earth point (4) on the vehicle with the charging cable. Start with the charger.
- Start the charging process.

When the charging process is complete:

- First, remove the charging cable from earth point (4) and the negative terminal of the charger, then from positive contact (2) and the positive terminal of the charger. Begin each time with the contacts of the vehicle.
- After removing the charging cable, close cover (3) of positive contact (2).
- Close cover (1).

Further information can be obtained at a qualified specialist workshop.

Replacing the 12V battery

► Observe the notes on the 12V battery (⟶ page 746).

Mercedes-Benz recommends having the 12V battery replaced at a qualified specialist workshop, e.g. at a Mercedes-Benz Service Centre.

IF YOU WANT TO REPLACE THE BATTERY YOURSELF, OBSERVE THE FOLLOWING NOTES:

- Replace a faulty battery with a battery which meets the specific vehicle requirements.

  The vehicle is equipped with a battery with AGM technology (Absorbent Glass Mat) or a lithium-ion battery. Full vehicle functionality is only guaranteed with an AGM battery or lithium-ion battery. For safety reasons, Mercedes-Benz recommends only using batteries that have been tested and approved for the vehicle by Mercedes-Benz.
- Use the detachable parts such as vent hose, elbow fittings or terminal covers from the battery to be replaced.
- Make sure that the vent hose is always connected to the original opening on the side of the battery.

  Fit any existing or supplied stop plugs.

  Otherwise, gases or battery acid could escape.
- Make sure that detachable parts are reconnected in the same way.

Tow-starting or towing away

Permitted towing methods (not plug-in hybrid)

NOTE
Damage from automatic braking

THE VEHICLE WILL BRAKE AUTONOMOUSLY IN CERTAIN SITUATIONS IF THE FOLLOWING FUNCTIONS ARE SWITCHED ON:

- Active Brake Assist
- Active Distance Assist DISTRONIC
- HOLD function
- Active Parking Assist

To avoid damage to the vehicle, switch these systems off e.g. before towing it or in a car wash.

Mercedes-Benz recommends transporting your vehicle in the case of a breakdown, rather than towing it.

For towing with both axles on the ground, use a tow rope or tow bar. Do not use tow bar systems.

NOTE
Damage to the vehicle due to towing away incorrectly

► Observe the instructions and notes on towing away.

VEHICLES WITH REAR-WHEEL DRIVE

Permitted towing methods	
Both axles on the ground	Yes, for a maximum of 50 km at 50 km/h
Front axle raised	No
Rear axle raised	Yes, if the steering wheel is fixed in the centre position with a steering wheel lock

4MATIC VEHICLES

Permitted towing methods	
Both axles on the ground	Yes, for a maximum of 50 km at 50 km/h
Front axle raised	No
Rear axle raised	No

Towing with a raised axle: towing should be performed by a towing company.

Permitted towing methods (plug-in hybrid)

Mercedes-Benz recommends transporting your vehicle in case of a breakdown, rather than towing it.

For towing with both axles on the ground, use a tow rope or tow bar. Do not use tow bar systems.

NOTE
Damage to the vehicle due to towing away incorrectly

► Observe the instructions and notes on towing away.

IN THE FOLLOWING SITUATIONS, ONLY TRANSPORTING THE VEHICLE IS PERMITTED:

- The driver display is not working.
- The driver display shows the Towing not permitted See Owner's Manual display message.

  Exception: if the vehicle is located in a danger zone, it can be recovered from the danger zone despite the Towing not permitted See Owner's Manual display message or the display not working. It must not be towed further than 100 m with both axles on the ground. A towing speed of 10 km/h must not be exceeded. Beyond these limits, only transporting is permitted.

VEHICLES WITH REAR-WHEEL DRIVE

Permitted towing methods	
Both axles on the ground	Yes, for a maximum of 50 km at 50 km/h, only forwards with the driver on board
Front axle raised	No
Rear axle raised	Yes, if the steering wheel is fixed in the centre position with a steering wheel lock

4MATIC VEHICLES

Permitted towing methods	
Both axles on the ground	Yes, for a maximum of 50 km at 50 km/h, only forwards with the driver on board
Front axle raised	No
Rear axle raised	No

Towing the vehicle with both axles on the ground

► Observe the notes on the permitted towing methods (⟶ page 754).

► Plug-in hybrid: observe the notes on the permitted towing methods (⟶ page 755).

► Make sure that the battery is connected and charged.

OBSERVE THE FOLLOWING POINTS WHEN THE BATTERY IS DISCHARGED:

- The vehicle cannot be started.
- The electric parking brake cannot be released or applied.

- **Vehicles with automatic transmission:** The transmission cannot be shifted to position N or P.

Vehicles with automatic transmission: If the transmission cannot be shifted to position N or if the display does not show anything, transport the vehicle (⟶ page 760, 757). A tow truck with lifting equipment is required for vehicle transport.

NOTE
Damage due to towing away at excessively high speeds or over long distances

The drivetrain could be damaged when towing at excessively high speeds or over long distances.

- ► A towing speed of 50 km/h must not be exceeded.
- ► A towing distance of 50 km must not be exceeded.

WARNING
Risk of accident when towing a vehicle with too much weight

IF THE VEHICLE TO BE TOWED IS HEAVIER THAN THE PERMISSIBLE GROSS MASS OF YOUR VEHICLE, THE FOLLOWING SITUATIONS CAN ARISE:

- The towing eye breaks off.
- The combination oscillates and can capsize.

► Before towing, check whether the vehicle to be towed exceeds the permissible gross mass.

If a vehicle is to be towed away, its permissible gross mass must not exceed the permissible gross mass of the towing vehicle.

► Information on the permissible gross mass of the vehicle can be found on the vehicle identification plate (⟶ page 860).
► Fit the towing eye (⟶ page 761).
► Fasten the towing device.

NOTE
Damage due to incorrect connection of the tow bar

► Only connect the tow rope or tow bar to the towing eyes.

► Deactivate the automatic locking mechanism (⟶ page 208).
► Do not activate the HOLD function (⟶ page 421).
► Deactivate tow-away protection (⟶ page 231).
► Deactivate Active Brake Assist (⟶ page 453).
► **Vehicles with automatic transmission:** Shift the transmission to position N.
► **Vehicles with automatic transmission:** Do not open the driver's door or front passenger door; the transmission otherwise automatically shifts to position P.
► Release the electric parking brake.

WARNING
Risk of accidents due to restricted safety-related functions during towing

SAFETY-RELEVANT FUNCTIONS ARE RESTRICTED OR NO LONGER AVAILABLE IN THE FOLLOWING SITUATIONS:

- The vehicle is switched off.
- The brake system or the power steering is malfunctioning.
- The power supply or the on-board electrical system is defective.

If your vehicle is being towed, considerably more force may be required for steering and braking.

In addition, important vehicle display messages cannot be seen if the driver display is faulty.

► Use a tow bar.

► Before towing, ensure that the driver's display is operational and the steering can move freely.

NOTE
Damage due to excessive tractive power

If you pull away sharply, the tractive power may be too high and the vehicles could be damaged.

► Pull away slowly and smoothly.

Load vehicle for transportation (vehicles with AIRMATIC)

Requirements:

- The vehicle is stationary.
- The vehicle is switched off.
- The driver display is in the initial state without any opened menus (⟶ page 519). Transport is also possible when a warning message is visible.
- The 12 V battery is charged.

Plug-in hybrid: transportation of vehicles should only be carried out by professional recovery companies.

► Select Vehicle transport.

ⓘ The noise certification mode is exclusively intended for the technical testing organisation. This restricts the drive output of the vehicle and must not be used in customer operation.

► If required set the system language (⟶ page 593).

► Observe the notes on towing away (⟶ page 75).

► Connect the towing device to the towing eye in order to load up the vehicle.

Vehicles with trailer hitch: You can also attach the towing device to the trailer hitch.

- Switch on the power supply (⟶ page 325).
- Shift the transmission to position N.

The transmission may be locked in position P in the event of damage to the electrics. To shift to N, provide the on-board electrical system with power (⟶ page 71).

NOTE
Possible vehicle damage when loading or unloading

The vehicle must be raised to transport level when loading or unloading.

If the transport settings are not shown or the display message Vehicle not ready for loading appears, the vehicle must not be loaded or unloaded.

- If necessary, raise the vehicle to transport level again.
- Do not use a ramp to load or unload a vehicle that cannot be raised to transport level. Contact a qualified specialist workshop.



WARNING
Risk of accident due to activated transport level

If the vehicle is raised to transport level, driving and driving safety systems have only limited availability and the view from the vehicle is restricted.

Driving safety is severely restricted and there is a risk of an accident!

- Do not use transport level in normal road operation.
- Only activate and use transport level to load the vehicle and when not on public roads.
- Ensure that no persons or obstacles are located in the area surrounding the vehicle.

RAISING VEHICLE TO TRANSPORT LEVEL

- Press and hold button for at least five seconds.
- Press and hold SOS button immediately OK for at least one second.
  The For transport level, switch vehicle on display message is shown.
- Switch on the vehicle (⟶ page 326).
  The transport settings are displayed.

- ► With a downward swiping gesture Transport level select and OK press.
  The vehicle is raised and the display message Vehicle rising... Do not drive on ramp is shown for five seconds. The raising process can take up to 60 seconds and can be interrupted with the ↩ button.
- ► Do not switch the vehicle off while it is being raised.

As the vehicle is being raised you can already manoeuvre at a speed of maximum 40 km/h.



- ► For loading wait until the transport level has been reached and the status Transport level is displayed.

ⓘ When the vehicle is raised to transport level, the transport settings are also still displayed after a restart. Operation of the driver display is restricted.

IF THE VEHICLE IS AT TRANSPORT LEVEL, IT IS LOWERED AGAIN IN THE FOLLOWING SITUATIONS:

- When driving faster than 40 km/h.
- The 12 V battery is discharged.

The vehicle is adjusted to the height of the last active level.

TRANSPORTING THE VEHICLE

- ► Load the vehicle correctly onto the transporter.
  - Ensure that all wheels are on the transportation surface.
  - Ensure that the vehicle is positioned parallel with the direction of travel.
- ► Put the selector lever into position P.
- ► Use the electric parking brake to secure the vehicle against rolling away.
- ► Stop the vehicle and switch off the power supply.
- ► Only secure the vehicle by the wheels.

4MATIC VEHICLES

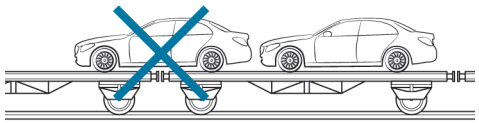

- ► Make sure that the front and rear axles come to rest on the same transport vehicle.

NOTE
Damage to the drive train due to incorrect positioning of the vehicle

- ► Do not position the vehicle above the connection point of the transport vehicle.

UNLOADING VEHICLE

- Make sure that the vehicle is raised to transport level before unloading.

LOWER VEHICLE AFTER UNLOADING

- Switch on the power supply.
- Start the vehicle.
- In the transportation settings, select Standard level with an upward swiping gesture and press OK.
  The vehicle is adjusted to the height of the last active level and the display message Lowering vehicle is shown.
- After the vehicle has lowered, press the button ⮌ for at least two seconds.
  The transport settings are closed.

Load vehicle for transportation (vehicles without AIRMATIC)

Plug-in hybrid: transportation of vehicles should only be carried out by professional recovery companies.

- Observe the notes on towing away.
- Connect the towing device to the towing eye in order to load up the vehicle.

ⓘ You can also attach the towing device to the trailer hitch.

- Shift the automatic transmission to position N.

ⓘ The automatic transmission may be locked in position P in the event of damage to the electrics. To shift to N, supply power to the on-board electrical system (⟶ page 71).

- Load the vehicle correctly onto the transporter.
  - Ensure that all wheels are on the transportation surface.
  - Ensure that the vehicle is positioned parallel with the direction of travel.
- Put the selector lever into position P.
- Use the electric parking brake to secure the vehicle against rolling away.
- Stop the vehicle and switch off the power supply.
- Only secure the vehicle by the wheels.

4MATIC VEHICLES/VEHICLES WITH AUTOMATIC TRANSMISSION

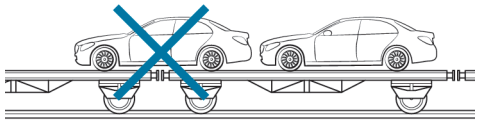

- Make sure that the front and rear axles come to rest on the same transport vehicle.

NOTE
Damage to the drive train due to incorrect positioning of the vehicle

- Do not position the vehicle above the connection point of the transport vehicle.

Towing eye stowage location

PLUG-IN HYBRID

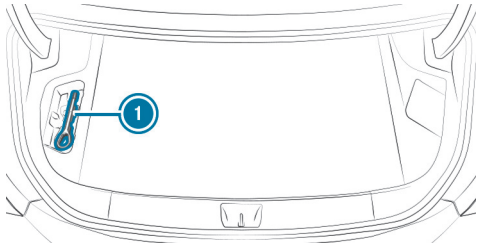

The towing eye (1) is located in the boot on the left under a cover in the recess of the side wall trim.

Not plug-in hybrid

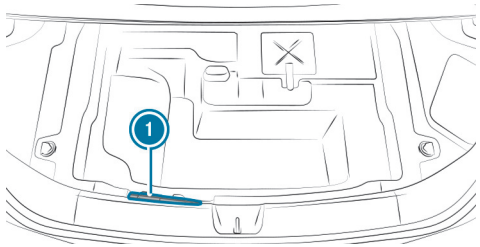

The towing eye (1) is located under the boot floor in the loading sill.

Depending on the respective vehicle version, the towing eye is located in a different position in the boot.

Fitting and removing the towing eye

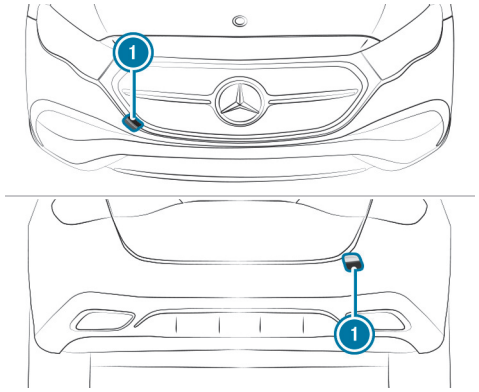

- Press the cover (1) inwards at the marking and remove.
- Screw in the towing eye in a clockwise direction as far as it will go and tighten.

Vehicles with trailer hitch: vehicles with trailer hitch do not feature a holding fixture at the back for the towing eye. Affix the towing device to the trailer hitch.

- After removing the towing eye, reattach the cover (1) in the bumper.

NOTE
Damage to the vehicle as a result of incorrect use of the towing eye or trailer hitch

The vehicle could sustain damage if the towing eye or trailer hitch is used to haul the vehicle out of a ditch during recovery situations.

- The towing eye and trailer hitch should only be used to tow the vehicle.
- Do not use the towing eye or trailer hitch to haul the vehicle out of a ditch during recovery situations.

Tow-starting the vehicle

VEHICLES WITH AUTOMATIC TRANSMISSION

- Observe the following note on material damage:

NOTE
Damage to the automatic transmission due to tow-starting

The automatic transmission may be damaged in the process of tow-starting vehicles with automatic transmission.

- Vehicles with automatic transmission must not be tow-started.

Electrical fuses

Notes on electrical fuses

WARNING
Risk of accident and injury due to overloaded lines

If you manipulate or bridge a faulty fuse or if you replace it with a fuse with a higher amperage, the electric line could be overloaded.

This could result in a fire.

- Always replace faulty fuses with specified new fuses containing the correct amperage.

NOTE
Damage due to incorrect fuses

Using incorrect fuses can result in damage to electrical components or systems or their functions being considerably restricted.

- Use only fuses approved for Mercedes-Benz with the respective specified fuse rating.

Replace blown fuses with equivalent fuses, identifiable by their colour and label. The fuse ratings and further information to be observed can be found in the fuse assignment diagram.

Fuse assignment diagram: on the fuse box in the boot (⟶ page 766).

NOTE
Damage or malfunctions caused by moisture

Moisture may cause damage to the electrical system or cause it to malfunction.

- When the fuse box is open, make sure that no moisture can enter the fuse box.
- When closing the fuse box, make sure that the seal of the lid is positioned correctly on the fuse box.

If the newly inserted fuse also blows, have the cause determined and rectified at a qualified specialist workshop.

ENSURE THE FOLLOWING BEFORE REPLACING A FUSE:

- The vehicle is secured against rolling away.
- All electrical consumers are switched off.
- The vehicle is switched off.

THE ELECTRICAL FUSES ARE LOCATED IN VARIOUS FUSE BOXES:

- Fuse box in the engine compartment on the driver's side (⟶ page 764)
- Fuse box on the driver's side of the cockpit (⟶ page 765)
- Fuse box in the front passenger footwell (⟶ page 765)
- Fuse box in the boot (⟶ page 766)

Opening and closing the fuse box in the engine compartment

Requirements:

- A dry cloth and a screwdriver are available.

Observe the notes on electrical fuses (⟶ page 73).

OPENING

WARNING
Risk of injury from using the windscreen wipers when the bonnet is open

If the windscreen wipers start moving when the bonnet is open, you could be trapped by the wiper linkage.

► Always switch off the windscreen wipers and the vehicle first if you need to open the bonnet.

► Open the bonnet (⟶ page 717).

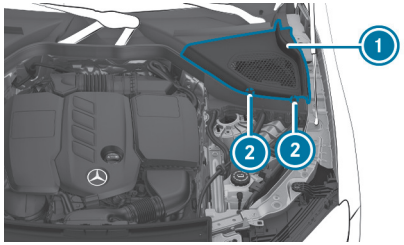

► Turn both fastening clips (2) on cover (1) on the driver's side a quarter-turn clockwise.

► Fold cover (1) upwards.

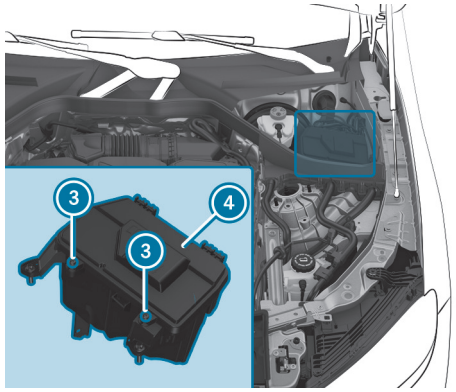

► Remove any existing moisture from the fuse box using a dry cloth.

► Loosen screws (3) and remove fuse box lid (4) from the top.

CLOSING

► Check whether the seal is positioned correctly in lid (4).

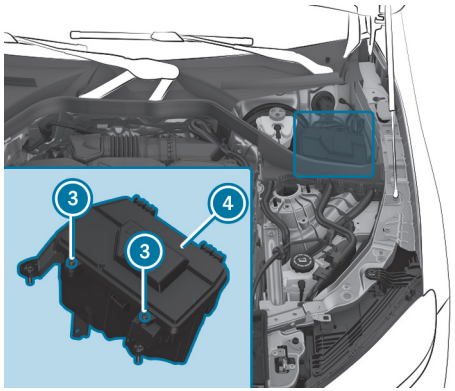

- Insert lid (4) into the bracket at the rear of the fuse box.
- Fold down lid (4) of the fuse box and tighten screws (3).

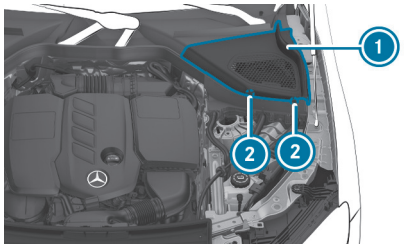

- Fold down cover (1).
- Turn both fastening clips (2) on cover (1) a quarter-turn anti-clockwise.
- Close the bonnet.

Opening and closing the fuse housing in the cockpit

Requirements:

- Observe the notes on electrical fuses (⟶ page 73).

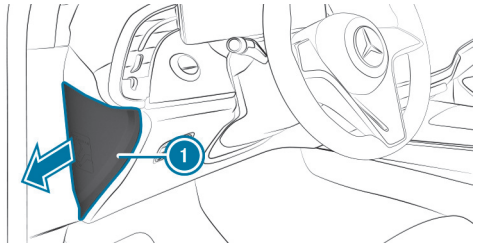

The fuse housing is on the driver's side on the side of the cockpit under a cover.

- **To open:** open cover (1) in the direction of the arrow and remove it.
- **To close:** reinsert cover (1).

Mercedes-Benz recommends you have the fuse housing opened at a Mercedes-Benz Service Centre.

Opening and closing the fuse box in the front passenger footwell

Requirements

Observe the notes on electrical fuses (⟶ page 73).

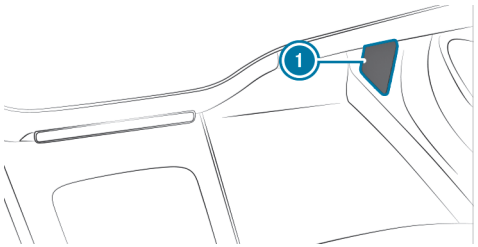

- **To open:** fold out and remove cover 1.
- **To close:** reinsert cover 1.

Opening and closing the fuse box in the boot

Requirements

Observe the notes on electrical fuses (⟶ page 73).

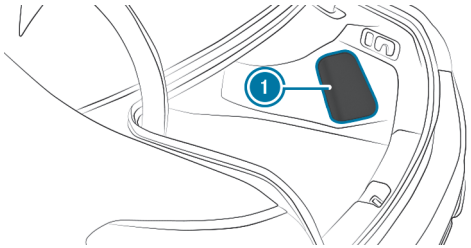

- **To open:** fold out and remove cover 1.
- **To close:** reinsert cover 1.

Wheels and tyres

This interactive PDF works like a website – tap or click a button to jump straight to where you want to go.
You can return here at any time via the navigation bar at the top left.

Notes on noise or unusual handling characteristics
Notes on regularly inspecting wheels and tyres
Notes on snow chains
Activating or deactivating snow chain mode
Tyre pressure
Wheel change
Emergency spare wheel

Notes on noise or unusual handling characteristics

Make sure there are no vibrations, noises or unusual handling characteristics when the vehicle is in motion. This may indicate that the wheels or tyres are damaged. Hidden tyre damage could also be causing the unusual handling characteristics.

If you suspect that a tyre is defective, reduce your speed immediately and have the tyres and wheels checked at a qualified specialist workshop.

Notes on regularly inspecting wheels and tyres

WARNING
Risk of injury due to damaged tyres

Damaged tyres can cause tyre pressure loss.

► Check the tyres regularly for signs of damage and replace any damaged tyres immediately.

WARNING
Risk of aquaplaning due to insufficient tyre tread

Insufficient tyre tread will result in reduced tyre grip. There is a risk of an accident.

On a wet road surface the risk of aquaplaning is increased, in particular where speed is not adapted to suit the conditions.

► Check the tread depth and the condition of the tyre contact surface across the entire width of all tyres on a regular basis.

MINIMUM TREAD DEPTH FOR

- Summer tyres: 3 mm
- M+S tyres: 4 mm

► For safety reasons, replace the tyres before the legally-prescribed limit for the minimum tread depth is reached.

► Replace the tyres immediately if the legally-prescribed limit for the minimum tread depth is reached.

CARRY OUT THE FOLLOWING CHECKS ON ALL WHEELS REGULARLY, AT LEAST ONCE A MONTH OR AS REQUIRED, FOR EXAMPLE, PRIOR TO A LONG JOURNEY OR DRIVING OFF-ROAD:

- Check the tyre pressure (⟶ page 773).

- Visually inspect wheels and tyres for damage.
- Check the valve caps.
- Visual check of the tyre tread depth and the tyre contact surface across the entire width.

  The minimum tread depth for summer tyres is 3 mm and for winter tyres 4 mm.

Notes on snow chains

WARNING
Risk of accident due to incorrectly fitted snow chains

If you have fitted snow chains to the front wheels, they may drag against the vehicle body or chassis components.

- ► Never fit snow chains to the front wheels.
- ► Only fit snow chains on the rear wheels in pairs.

NOTE
Damage to body or suspension parts caused by fitted snow chains

Fitting snow chains to the front wheels of 4MATIC models can damage body or suspension parts.

- ► Only fit snow chains to the rear wheels of 4MATIC models.

NOTE
Damage to wheel trims caused by fitted snow chains

Fitting snow chains to aluminium wheels can damage the wheel trims.

- ► Remove the wheel trims from the aluminium wheels before fitting snow chains.

OBSERVE THE FOLLOWING NOTES WHEN USING SNOW CHAINS:

- Snow chains are only permissible for certain wheel/tyre combinations. You can obtain information about this from a Mercedes-Benz Service Centre.
- For safety reasons, only use snow chains that have been specifically approved for your vehicle by Mercedes-Benz, or snow chains of the same quality standard.
- Comply with the installation instructions of the snow chain manufacturer.
- If snow chains are fitted, the maximum permissible speed is 50 km/h.
- **Vehicles with Active Parking Assist:** do not use Active Parking Assist when snow chains are fitted.
- **Vehicles with level control:** if snow chains are fitted, only drive at a raised vehicle level (⟶ page 467).

ⓘ You can permanently limit the speed for driving with winter tyres (⟶ page 428).

ⓘ You can deactivate ESP® to start off (⟶ page 419). This allows the wheels to spin, achieving increased tractive power.

Activating or deactivating snow chain mode

Multimedia system:



► Activate or deactivate Snow chain mode.

When the function is active, the vehicle adjusts to the fact that snow chains have been fitted.

Additionally, parts of the driving and driving safety systems are not available when snow chain mode is active.

Tyre pressure

Notes on tyre pressure

WARNING
Risk of an accident due to tyre pressure that is insufficient or too high

TYRES WITH A PRESSURE THAT IS INSUFFICIENT OR TOO HIGH POSE THE FOLLOWING DANGERS IN PARTICULAR:

- The tyres can burst.
- The tyres can wear excessively and/or unevenly.
- The driving characteristics as well as the steering- and braking may be greatly impaired.

► Observe the recommended tyre pressures and check the tyre pressure of all tyres including the spare wheel:

- monthly
- when the load changes
- before embarking on a longer journey
- when the operating conditions change, e.g. off-road driving
- when driving at over 250 km/h

► Adjust the tyre pressure, if necessary.

HIGH OR LOW TYRE PRESSURE CAN:

- Shorten the service life of the tyres.
- Cause increased tyre damage.
- Adversely affect driving characteristics and thus driving safety, e.g. due to aquaplaning.

WARNING
Risk of accident due to repeated pressure drop in the tyres

The wheels, valves or tyres could be damaged.

Too low a tyre pressure can lead to the tyres bursting.

► Examine the tyres for foreign objects.

► Check whether the tyre has a puncture or the valve has a leak.

► If you are unable to rectify the damage, contact a qualified specialist workshop.

You can find information on recommended tyre pressures for your vehicle's factory-fitted tyres in the tyre pressure table (→ page 774).

Use a suitable pressure gauge to check the tyre pressure. The outer appearance of a tyre does not permit any reliable conclusion about the tyre pressure.

ONLY CORRECT TYRE PRESSURES WHEN THE TYRES ARE COLD. CONDITIONS FOR COLD TYRES:

- The vehicle has been parked with the tyres out of direct sunlight for at least three hours.
- The vehicle has travelled less than 1.6 km.

The vehicle's tyres heat up when driving. As the temperature of the tyres increases, so too does the tyre pressure.

NOTES ON TRAILER OPERATION
Always inflate the rear axle tyres to the recommended tyre pressures on the tyre pressure table for increased load.

Tyre pressure table

The tyre pressure table is on the B-pillar on the driver's side.

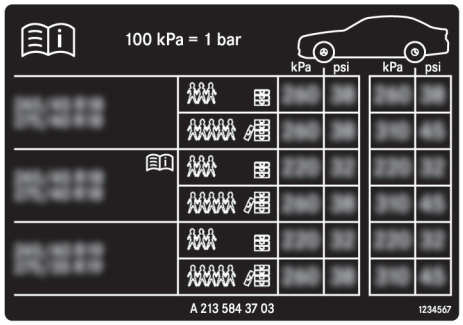

The tyre pressure table shows the recommended tyre pressure for all tyres approved for this vehicle. The recommended tyre pressures apply for cold tyres under various operating conditions, i.e. load and/or speed of the vehicle.

If one or more tyre sizes precede a tyre pressure, the tyre pressure information following is only valid for those tyre sizes.

If the preceding tyre sizes are complemented by the symbol, the tyre pressure information following shows alternative tyre pressures. These tyre pressures may improve your vehicle's ride comfort. Fuel consumption may then increase slightly.

The load conditions "partially laden" and "fully laden" are defined in the table for different numbers of passengers and amounts of luggage. The actual number of seats may differ from this.

BE SURE TO ALSO OBSERVE THE FOLLOWING FURTHER RELATED TOPICS:

- Notes on tyre pressure (⟶ page 773)

Tyre pressure monitoring system

FUNCTION OF THE TYRE PRESSURE MONITORING SYSTEM
The system checks the tyre pressure and the temperature of the tyres fitted to the vehicle by means of a tyre pressure sensor.

The tyre pressure and the tyre temperature are displayed on the driver display.

In the event of significant pressure loss or excessive temperature of the tyres, you will be warned by display messages (⟶ page 960) or the warning light on the driver display (⟶ page 986).

The tyre pressure monitoring system serves solely as an aid. It is the driver's responsibility to set the tyre pressure to the recommended cold tyre pressure suitable for the operating situation.

In most cases, the tyre pressure monitoring system will automatically update the new reference values after you have changed the tyre pressure. You can,

however, also update the reference values by restarting the tyre pressure monitoring system manually (⟶ page 775).

SYSTEM LIMITS

THE SYSTEM MAY BE IMPAIRED OR INOPERATIVE IN THE FOLLOWING SITUATIONS IN PARTICULAR:

- Incorrect reference values were taught in.
- Sudden pressure loss caused, e.g. by a foreign object penetrating the tyre.
- There is a malfunction caused by another radio signal source.

CHECKING THE TYRE PRESSURE WITH THE TYRE PRESSURE MONITORING SYSTEM

Requirements:

- The vehicle is switched on.

Driver display:

→ ⌂ » Service

► Press OK to confirm.

ONE OF THE FOLLOWING MESSAGES APPEARS:

- Current tyre pressure of each wheel:



- Tyre pressures will be displayed after a few minutes of driving: Current values are not yet known to the system. The pressure/temperature values of each tyre are displayed as soon as they are known to the system.
- Tyre pressure monitor active: the teach-in process of the system is not yet complete. The tyre pressures are already being monitored.

► Compare the current tyre pressure with the recommended tyre pressure for the current operating status (⟶ page 774). Additionally, observe the notes on cold tyres (⟶ page 773).

ⓘ The values displayed on the driver display may deviate from those of the tyre pressure gauge as they relate to sea level. At high elevations, the tyre pressure values indicated by a pressure gauge are higher than those shown on the driver display.

RESTARTING THE TYRE PRESSURE MONITORING SYSTEM

Requirements:

- The recommended tyre pressure is correctly set for the respective operating condition on each of the four wheels (⟶ page 773).

RESTART THE TYRE PRESSURE MONITORING SYSTEM IN THE FOLLOWING SITUATIONS:

- The tyre pressure has changed.
- The wheels or tyres have been changed or newly fitted.

Driver display:

→ ⌂ » Service

▶ Show tyre pressure: press OK.

▶ Show options: press OK again.

▶ Select Tyre pressure and confirm with OK.

The driver display shows the message Use current tyre pressures as new reference values?.

▶ Select Yes and confirm the restart with OK.

The driver display shows the message Tyre pressure monitor restarted.

Current warning messages are deleted and the (!) yellow warning lamp goes out.

After you have driven for a few minutes, the system checks whether the current tyre pressures are within the specified range. The current tyre pressures are then accepted as reference values and monitored.

If the tyre pressure values are not within the prescribed range, the message Please correct tyre pressure appears.

Wheel change

Notes on selecting, fitting and replacing tyres

WARNING
Risk of accident due to incorrect wheel and tyre dimensions

If wheels and tyres of the wrong size are fitted, the service brakes or components in the brake system and in the wheel suspension may be damaged.

- ► Always replace wheels and tyres with those that fulfil the specifications of the original part.

FOR WHEELS, PAY ATTENTION TO THE FOLLOWING:

- Designation
- Type

FOR TYRES, PAY ATTENTION TO THE FOLLOWING:

- Designation
- Manufacturer
- Type

WARNING
Risk of injury through exceeding the specified tyre load-bearing capacity or the permissible speed rating

Exceeding the load-bearing capacity of the tyres can lead to tyre damage and could cause the tyres to explode.

- ► Therefore, only use tyre types and sizes approved for your vehicle model.
- ► Observe the tyre load-bearing capacity rating and speed rating required for your vehicle.

NOTE
Vehicle and tyre damage caused by non-approved tyre types and sizes

For safety reasons, only use tyres, wheels and accessories which have been specially approved by Mercedes-Benz for your vehicle.

THESE TYRES ARE SPECIFICALLY CONFIGURED FOR ACTIVE SAFETY SYSTEMS, E.G. ABS, ESP® AND 4MATIC, AND ARE MARKED AS FOLLOWS:

- MO = Mercedes-Benz Original
- MOE = Mercedes-Benz Original Extended (tyres with run-flat characteristics, only for certain wheels)
- MO1 = Mercedes-Benz Original (only certain AMG tyres)

Otherwise certain properties, e.g. driving characteristics, noise emissions, consumption, etc., could be adversely affected. Furthermore, other tyre sizes could result in the tyres rubbing against the body and axle components when loaded. This could result in damage to the tyre or the vehicle.

Only use tyres, wheels and accessories that have been checked and recommended by Mercedes-Benz.

NOTE
Risk to driving safety from retreaded tyres

Retreaded tyres are neither tested nor recommended by Mercedes-Benz, since previous damage cannot always be detected on retreaded tyres.

For this reason driving safety cannot be guaranteed.

► Do not use used tyres if you have no information about their previous usage.

NOTE
Possible wheel and tyre damage when driving over obstacles

Large wheels have a smaller section width. As the section width decreases, the risk of wheels and tyres being damaged when driving over obstacles increases.

► Avoid obstacles or drive especially carefully.

► Reduce your speed when driving over kerbs, speed bumps, manhole covers and potholes.

► Avoid particularly high kerbs.

NOTE
Possible wheel and tyre damage when parking on kerbs or in potholes

Parking on kerbs or in potholes can damage the wheels and tyres.

- ► Only park on level surfaces if possible.
- ► Avoid kerbs and potholes when parking.

NOTE
Damage to electronic component parts due to the use of tyre-fitting tools

Vehicles with tyre pressure monitoring system: there are electronic components in the wheel.

Positioning tyre-fitting tools in the area of the valve may damage the electronic components.

- ► Tyre-fitting tools should not be applied in the area of the valve.
- ► Always have tyres changed at a qualified specialist workshop.

NOTE
Damage to summer tyres at low ambient temperatures

At low ambient temperatures, tears could form when driving with summer tyres, causing permanent damage to the tyre.

- ► At temperatures below 7 °C use M+S tyres.

Accessory parts which are not approved for your vehicle by Mercedes-Benz, or which are not used correctly, can impair driving safety.

BEFORE PURCHASING AND USING NON-APPROVED ACCESSORIES, VISIT A QUALIFIED SPECIALIST WORKSHOP AND ENQUIRE ABOUT:

- Suitability
- Legal provisions
- Factory recommendations

WARNING
Risk of accident with sport tyres

The special tyre tread in combination with the optimised tyre compound means that the risk of skidding or aquaplaning on wet roads is increased.

In addition, the tyre grip is greatly reduced at a low outside temperature and tyre running temperature.

- ► Switch on the ESP® and adapt your driving style accordingly.
- ► Use M+S tyres at outside temperatures of less than 7 °C.
- ► Only use tyres suitable for the intended use.

OBSERVE THE FOLLOWING WHEN SELECTING, FITTING AND REPLACING TYRES:

- Country-specific requirements for tyre approval that define a specific tyre type for your vehicle.
- The use of certain tyre types in certain regions and areas of operation can be advisable.

- Only use tyres and wheels of the same type (summer tyres, winter tyres, MOExtended tyres) and the same make.
- Only fit wheels of the same size on one axle (left and right).

  Only fit a different size of wheel in the event of a flat tyre, to enable you to drive to a specialist workshop.
- Do not make any modifications to the brake system, the wheels or the tyres.

  The use of shims or brake dust shields is not permitted and may invalidate the vehicle's general operating permit.
- **Vehicles with a tyre pressure monitoring system:** All fitted wheels must be equipped with functioning sensors for the tyre pressure monitoring system.
- At temperatures below 7 °C, use winter tyres or all-season tyres marked M+S for all wheels.

  Winter tyres provide the best possible grip in wintry road conditions.
- For M+S tyres, only use tyres with the same tread.
- Observe the maximum permissible speed for the M+S tyres fitted.

  If the tyre's maximum speed is below that of the vehicle, this must be indicated by an appropriate label in the driver's field of vision.
- Drive the vehicle with new tyres at moderate speeds for the first 100 km.
- Replace the tyres after six years at the latest, regardless of wear.
- **When replacing with tyres that do not feature run-flat characteristics:** vehicles with MOExtended tyres are not supplied with a TIREFIT kit ex factory. Equip the vehicle with a TIREFIT kit after replacing with tyres that do not feature run-flat characteristics, e.g. winter tyres.
- At a speed greater than 240 km/h, the load capacity of the tyres is reduced. Winter tyres with speed index "W" (max. 270 km/h) in the size "265/40 R20 104W XL M+S" on the front axle and "295/35 R20 105W XL M+S" on the rear axle may only be used with the Mercedes-AMG E 53 Hybrid at a maximum speed of 240 km/h.

You can permanently limit the speed for driving with winter tyres (→ page 428).

For more information on wheels and tyres, contact a qualified specialist workshop.

VEHICLES WITH AMG DRIVER'S PACKAGE

WARNING
Risk of accident caused by non-approved tyre types

If you use tyre types that have not been adapted to changes made to the factory speed limit, this can have the following consequences:

- The tyres are not suitable for high speeds and the corresponding driving dynamics.
- The tyres wear unevenly and affect the roadworthiness of the vehicle.
- ABS, ESP® and cruise control operation are restricted.

This can jeopardise road safety.

► Only use tyre types that have been approved for the maximum permissible speed set and the vehicle.

Notes on changing wheels

WARNING
Risk of injury through different wheel sizes

Interchanging the front and rear wheels can severely impair the driving characteristics.

The disk brakes or wheel suspension components may also be damaged.

► Only interchange the front and rear wheels if the wheels and tyres have the same dimensions.

Interchanging the front and rear wheels if the wheels or tyres have different dimensions can render the general operating permit invalid.
Observe the instructions and safety notes on "Changing a wheel" (⟶ page 777).

THE WEAR PATTERNS ON THE FRONT AND REAR WHEELS DIFFER:

- front wheels wear more on the tyre shoulder
- rear wheels wear more in the centre of the tyre

Do not drive with tyres that have too little tread depth. This significantly reduces traction on wet roads (aquaplaning).

On vehicles with the same front and rear wheel size, you can interchange the wheels every 5000 to 10,000 km, depending on the wear. Ensure the direction of rotation is maintained for the wheels.

Notes on storing wheels

WHEN STORING WHEELS, OBSERVE THE FOLLOWING NOTES:

- After removing wheels, store them in a cool, dry and preferably dark place.
- Protect the tyres from contact with oil, grease or fuel.

Overview of the tyre-change tool kit

With the exception of some country-specific variants, vehicles are not equipped with a tyre-change tool kit. Consult a qualified specialist workshop to find out which tyre-change tool kit is necessary and approved for a wheel change on your vehicle.

YOU REQUIRE THE FOLLOWING TOOLS, FOREXAMPLE, TO CHANGE A WHEEL:

- Jack
- Chock
- Wheel wrench
- Centring pin

ⓘ The jack weighs approximately 3.4 kg.
The maximum load capacity of the jack can be found on the sticker affixed to the jack.
The jack is maintenance-free. In the event of a malfunction, please contact a qualified specialist workshop.

The tyre-change tool kit is located in the tool bag ⓘ in the boot.

When stowing the tool bag, ensure that it is adequately secured.

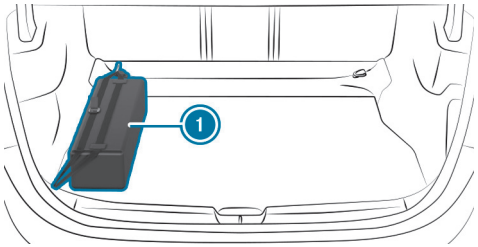

THE TOOL BAG CONTAINS:

- Jack
- Gloves
- Wheel wrench
- Centring pin
- Folding chock
- Ratchet wrench for jack

Preparing the vehicle for a wheel change

Requirements:

- The vehicle is not on a slope.
- The vehicle is on solid, non-slippery and level ground.
- The required tyre-change tool kit is available.

If your vehicle is not equipped with the tyre-change tool kit, consult a qualified specialist workshop to find out about suitable tools.

- Apply the electric parking brake manually.
- Move the front wheels to the straight-ahead position.
- Shift the transmission to position P.
- **Vehicles with level control:** Set the normal vehicle level (⟶ page 467).
- Switch off the vehicle.
- Make sure that the vehicle cannot be started.
- Place chocks or other suitable items under the front and rear of the wheel that is diagonally opposite the wheel you wish to change.
- Unload the vehicle.
- If necessary, remove wheel trims/hub caps (⟶ page 783).
- Raise the vehicle (⟶ page 784).

Fitting/removing the hub cap

REMOVING

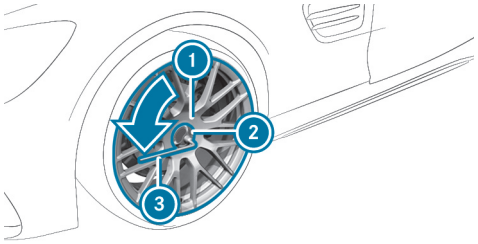

- ► Remove socket (2) and wheel spanner (3) from the vehicle tool kit (⟶ page 783).
- ► Position socket (2) on hub cap (1).
- ► Position the wheel spanner (3) on the socket (2).
- ► Using the wheel spanner (3), turn the hub cap (1) anti-clockwise and remove it.

FITTING

- ► Before fitting, check hub cap (1) and the wheel area for dirt, and clean if necessary.
- ► Position hub cap (1) and turn until it is in the right position.
- ► Position socket (2) on hub cap (1).
- ► Position wheel spanner (3) on socket (2) and tighten hub cap (1).

ⓘ **Specified tightening torque:** 25 Nm.

Removing and fitting wheel trim/hub caps

Requirements:

- The vehicle is prepared for a wheel change (⟶ page 782).

WHEEL TRIM

On vehicles with aluminium wheels, the wheel trim covers the wheel bolts. Remove the wheel trim before unscrewing the wheel bolts.

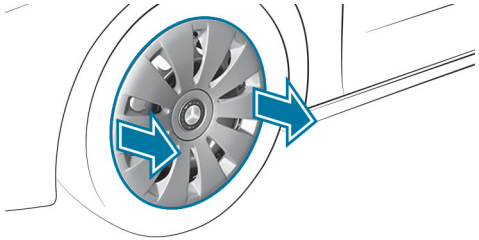

- ► **To remove:** use both hands to carefully grip the two wheel trim apertures and pull the trim away.
- ► **To fit:** position the wheel trim and press it firmly until it engages.

PLASTIC HUB CAP

Removal:

- ► Turn the centre cover of the hub cap anti-clockwise and remove the hub cap.

Fitting:

- ► Make sure that the centre cover of the hub cap has been turned anti-clockwise.
- ► Position the hub cap and turn the centre cover clockwise until the hub cap is felt and heard to engage.

ALUMINIUM HUB CAP

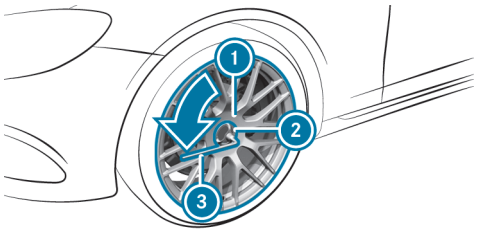

Removal:

- ► Position socket (2) from the tyre-change tool kit on hub cap (1).
- ► Position wheel wrench (3) on the socket (2).
- ► Using wheel wrench (3), turn hub cap (1) anti-clockwise and remove it.

Fitting:

- ► Follow the instructions above in reverse order.

ⓘ **Specified tightening torque:** 25 Nm.

Raising the vehicle for a wheel change

Requirements:

- There are no persons in the vehicle.
- The vehicle has been prepared for a wheel change (⟶ page 782).
- The wheel trims and hub caps have been removed (⟶ page 783).

IMPORTANT NOTES ON USING THE JACK:

- Use only a vehicle-specific jack that has been approved for Mercedes-Benz to raise the vehicle.
- The jack is only designed for raising and holding the vehicle for a short time while a wheel is being changed and not for maintenance work under the vehicle.
- The jack must be placed on a firm, level and non-slip surface. If necessary, use a large, flat, load-bearing, non-slip underlay.
- The foot of the jack must be positioned vertically under the jack support point.

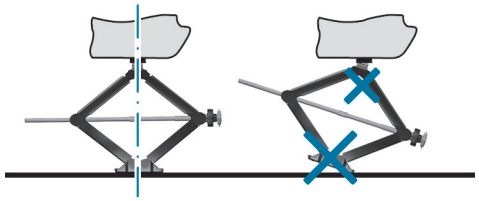

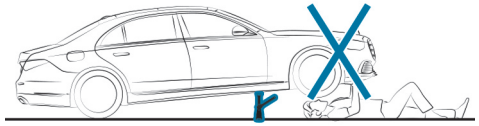

RULES OF CONDUCT WHEN THE VEHICLE IS RAISED:

- Do not put your hands or feet under the vehicle.
- Do not lie under the vehicle.
- Do not start the vehicle and do not release the electric parking brake.

- Do not open or close any doors or the boot lid.

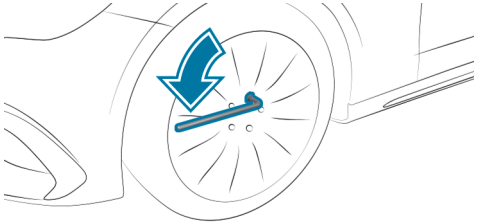

► Using the wheel spanner, loosen the wheel bolts on the wheel you wish to change by about one full turn. Do not unscrew the screws completely.

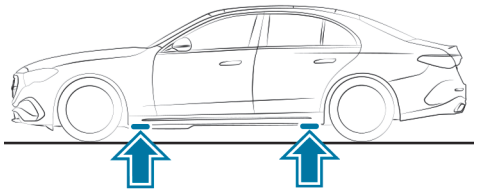

Position of the jack support points

WARNING
Risk of injury from incorrect positioning of the jack

If you do not position the jack correctly at the appropriate jacking point of the vehicle, the jack could tip with the vehicle raised.

► Only position the jack at the appropriate jacking point of the vehicle. The base of the jack must be positioned vertically under the jacking point of the vehicle.

NOTE
Damage to the vehicle due to the jack

If the jack has not been positioned at the prescribed jack support points, the vehicle may suffer damage.

► Only position the jack at the jack support points provided for this purpose.

► Take the ratchet wrench out of the tyre-change tool kit and place it on the hexagon nut of the jack in such a way that the lettering "AUF" is visible.

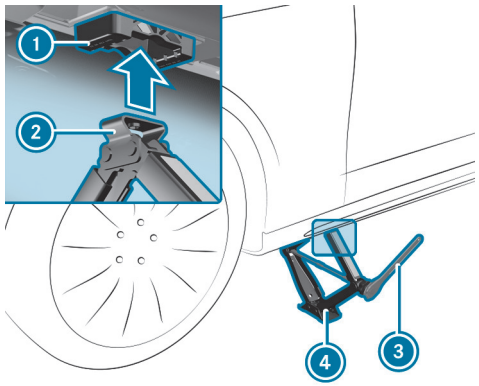

► Position support plate (2) of jack (4) in line with jack support point (1).

► Turn ratchet wrench (3) clockwise until support (2) sits completely on jack support point (1) and the base of the jack lies evenly on the ground.

► Turn ratchet wrench (3) until the tyre is raised a maximum of 3 cm from the ground.

► Loosen and remove the wheel (⟶ page 786).

Removing a wheel

Requirements:

- The vehicle is raised (⟶ page 784).

During wheel change, avoid applying any force to the brake discs, since this could impair the level of comfort when braking.

NOTE
Damage to the wheels' plastic elements when changing a wheel

Plastic elements on wheels may be damaged when removing and repositioning the wheel.

► Do not raise the wheels by the plastic elements when removing and repositioning.

NOTE
Damage to threading from dirt on wheel bolts

► Do not place wheel bolts in sand or on a dirty surface.

► Unscrew the uppermost wheel bolt completely.

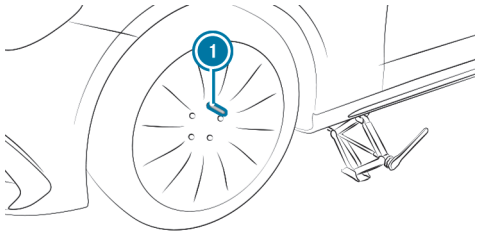

► Screw centering pin (1) into the thread instead of the wheel bolt.

► Unscrew the remaining wheel bolts completely.

► Remove the wheel.

Fitting a new wheel

Requirements:

- The wheel to be changed is removed and the centring pin is screwed in (⟶ page 786).

WARNING
Risk of accident from losing a wheel

Oiled or greased wheel bolts can cause the wheel bolts to come loose, as too can damaged wheel bolts or wheel hub threads.

- Never oil or grease the threads.
- In the event of damage to the threads, contact a qualified specialist workshop immediately.
- Have the damaged wheel bolts or damaged hub threads replaced.
- Do not continue driving.

- Observe the information on the choice of tyres (⟶ page 777).

For tyres with a specified running direction, an arrow on the side wall of the tyre indicates the correct running direction. Observe the direction of rotation when assembling.

NOTE
Damage to the wheels' plastic elements when changing a wheel

Plastic elements on wheels may be damaged when removing and repositioning the wheel.

- Do not raise the wheels by the plastic elements when removing and repositioning.

- Slide the wheel to be mounted onto the centring pin and push it on.

WARNING
Risk of injury from tightening wheel bolts and nuts

If you tighten the wheel bolts or wheel nuts when the vehicle is raised, the jack could tip.

- Only tighten wheel bolts or wheel nuts when the vehicle is on the ground.

- Observe the instructions and safety notes on "Wheel change" (⟶ page 777).
- For safety reasons, only use wheel bolts which have been approved for Mercedes-Benz and for the wheel in question.
- Tighten the wheel bolts evenly in a diagonal pattern in the order indicated until they are hand-tight.

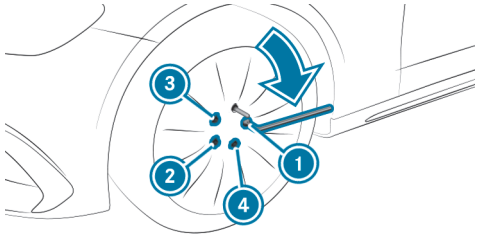

- Unscrew and remove the centring pin.
- Tighten the last wheel bolt until it is hand-tight.
- Lower the vehicle and tighten wheel bolts with the prescribed tightening torque (⟶ page 788).

Lowering the vehicle after a wheel change

Requirements:

- The new wheel has been fitted (⟶ page 786).

> **NOTE**
> Risk of vehicle jack becoming trapped by the AIRMATIC system
>
> If the AIRMATIC system has released air when raising the vehicle, the jack can become trapped when the vehicle is lowered.
>
> ► Start the engine. This adapts the vehicle level.
>
> ► Remove the jack from under the vehicle.

► **To lower the vehicle:** place the ratchet wrench onto the hexagon nut of the jack in such a way that the lettering "AB" is visible and turn it anti-clockwise.

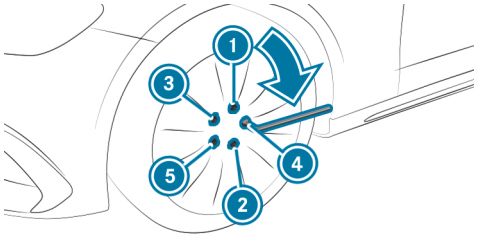

► Tighten the wheel bolts evenly in a diagonal pattern in the order indicated 1 to 5 with an initial maximum force of 80 Nm.

► Tighten the wheel bolts evenly in a diagonal pattern in the indicated order 1 to 5 with the specified tightening torque of 150 Nm.

> **WARNING**
> Risk of accident due to incorrect tightening torque
>
> The wheels could come loose if the wheel bolts or wheel nuts are not tightened to the prescribed torque.
>
> ► Ensure that the wheel bolts or wheel nuts are tightened to the prescribed tightening torque.
>
> ► If you are not sure, do not move the vehicle. Contact a qualified specialist workshop and have the tightening torque checked immediately.

► Check the tyre pressure of the newly fitted wheel and adjust it if necessary.

> The following does not apply if the new wheel is an emergency spare wheel:

► **Vehicles with a tyre pressure monitoring system:** Restart the tyre pressure monitoring system (⟶ page 775).

Emergency spare wheel

Notes on the emergency spare wheel

WARNING
Risk of accident caused by incorrect wheel and tyre dimensions

The wheel or tyre size and the tyre type of the emergency spare wheel or spare wheel and the wheel to be replaced may differ. The emergency spare wheel or spare wheel can significantly impair driving characteristics of the vehicle.

To prevent hazardous situations:

- ► Drive carefully.
- ► Never fit more than one emergency spare wheel or spare wheel that differs in size.
- ► Only use an emergency spare wheel or spare wheel briefly.
- ► Do not deactivate ESP®.
- ► Have the emergency spare wheel or spare wheel of a different size replaced at the nearest qualified specialist workshop. The new wheel must have the correct dimensions.

FOLLOWING NOTES ON FITTING AN EMERGENCY SPARE WHEEL:

- The maximum permissible speed with an emergency spare wheel fitted is 80 km/h.
- Do not fit the emergency spare wheel with snow chains.
- Replace the emergency spare wheel after six years at the latest, regardless of wear.
- Use the included wheel bolts for the emergency spare wheel.
- Check the tyre pressure of the fitted emergency spare wheel and adjust it as necessary.

ⓘ The specified tyre pressure is stated on the label of the emergency spare wheel.

ⓘ **Vehicles with a tyre pressure monitoring system:** if an emergency spare wheel is fitted, the tyre pressure monitoring system cannot function reliably. For a few minutes after an emergency spare wheel is fitted, the system may still display the tyre pressure of the removed wheel. Only restart the system when the emergency spare wheel has been replaced with a new wheel.

ALSO TAKE NOTE OF THE FOLLOWING TOPICS:

- Notes on tyre pressure (⟶ page 773)
- Tyre pressure table (⟶ page 774)
- Notes on fitting tyres (⟶ page 777)
- Fitting an emergency spare wheel (⟶ page 782)

Back to Contents

Technical data

This interactive PDF works like a website – tap or click a button to jump straight to where you want to go.
You can return here at any time via the navigation bar at the top left.

Notes on technical data
On-board electronics
Regulatory radio information
Overview of vehicle identification plate, VIN and engine number
Operating fluids
Vehicle data
Trailer hitch

Notes on technical data

The technical data was determined in accordance with EU Directives. The data stated only applies to vehicles with standard equipment. You can obtain further information from a Mercedes-Benz Service Centre.

Only for certain countries: you can find vehicle-specific vehicle data in the COC documents (CERTIFICATE OF CONFORMITY). These documents are supplied upon delivery of the vehicle.

On-board electronics

Notes on tampering with the engine electronics

NOTE
Premature wear through improper maintenance

Improper maintenance may cause vehicle components to wear more quickly and the vehicle's operating permit may be invalidated.

► Always have work on the engine electronics and related components carried out at a qualified specialist workshop.

Two-way radios

NOTES ON INSTALLING TWO-WAY RADIOS

WARNING
Risk of accident due to improper work on two-way radios

If two-way radios are manipulated or retrofitted incorrectly, the electromagnetic radiation from the two-way radios can interfere with the vehicle electronics and jeopardise the operating safety of the vehicle.

► You should have all work on electrical and electronic components carried out at a qualified specialist workshop.

WARNING
Risk of accident due to improper operation of two-way radios

If you use two-way radios in the vehicle improperly, their electromagnetic radiation can disrupt the vehicle's electronics. This is the case in the following situations, in particular:

- The two-way radio is not connected to an exterior aerial.
- The exterior aerial is fitted incorrectly or is not a low-reflection aerial.

This could jeopardise the operating safety of the vehicle.

► Have the low-reflection exterior aerial fitted at a qualified specialist workshop.

► When operating two-way radios in the vehicle, always connect them to the low-reflection exterior aerial.

NOTE
Invalidation of the operating permit due to failure to comply with the instructions for installation and use

The operating permit may be invalidated if the instructions for installation and use of two-way radios are not observed.

- Only use approved frequency bands.
- Observe the maximum permissible output power in these frequency bands.
- Only use approved aerial positions.

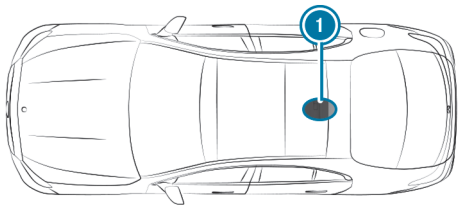

Vehicles without panoramic sliding sunroof

(1) Rear roof area

Fitting a roof aerial to vehicles with a panoramic sliding sunroof is not permitted.

Use Technical Specification ISO/TS 21609 (Road Vehicles – "EMCs for installation of aftermarket radio frequency transmitting equipment") when retrofitting two-way radios. Comply with the legal requirements for detachable parts.

If your vehicle is equipped with the pre-installation for a two-way radio, use the power supply and aerial connectors provided in the pre-installation. Observe the manufacturer's supplements when fitting.

MOBILE PHONE TRANSMISSION OUTPUT

The maximum transmission output (PEAK) at the base of the aerial must not exceed the values in the following table.

FREQUENCY BAND AND MAXIMUM TRANSMISSION OUTPUT

Frequency band	Maximum transmission output
2-m- frequency band 144 - 174 MHz	50 W
Terrestrial Trunked Radio (TETRA) 380 - 460 MHz	10 W
Mobile phone 2G	2 W
Mobile phone 3G/4G/5G	0.5 W

THE FOLLOWING CAN BE USED IN THE VEHICLE WITHOUT RESTRICTIONS:

- two-way radios with a maximum transmission output of up to 100 mW
- two-way radios with transmitter frequencies in the 380 -410 MHz frequency band and a maximum transmission output of up to 2 W (TETRA)
- mobile phones (2G/3G/4G/5G)

THERE ARE NO RESTRICTIONS WHEN POSITIONING THE AERIAL ON THE OUTSIDE OF THE VEHICLE FOR THE FOLLOWING FREQUENCY BANDS:

- Terrestrial Trunked Radio (TETRA)
- 2G/3G/4G/5G

Regulatory radio information

Specific information on wireless applications in accordance with 2014/53/EU

Besides the typical frequencies for mobile communication cars by Mercedes-Benz make use of the following automotive radio applications.

TYPE OF WIRELESS APPLICATION AND SPECIFICATIONS IN ACCORDANCE WITH 2014/53/EU

Technology	Frequency range	Transmission output/magnetic field strength
Remote Keyless Entry	20 kHz (9 – 90 kHz)	≤ 72 dBµA/m at 10m
Wireless Power Transmission	105 kHz (90 – 119 kHz)	≤ 42 dBµA/m at 10m
Remote Keyless Entry	120 kHz (119 – 135 kHz)	≤ 42 dBµA/m at 10m
Wireless Power Transmission	127 kHz (119 – 135 kHz)	≤ 66 dBµA/m at 10m with the magnetic field strength level decreasing 3dB/octave above 119 kHz
Near-field communication	13.553 – 13.567 MHz	≤ 42 dBµA/m at 10m
Remote Keyless Entry, Garage Door Opener, Tire Pressure Monitoring	433 MHz (433.05 – 434.79 MHz)	≤ 10 mW ERP
Block Heater Remote Control, Garage Door Opener	868 MHz (868.0 – 868.6 MHz)	≤ 25 mW ERP
Block Heater Remote Control, Garage Door Opener	869 MHz (868.7 – 869.2 MHz)	≤ 25 mW ERP
Bluetooth, Kleer, RLAN, wireless Headphones	2.4 GHz ISM band (2400 – 2483.5 MHz)	≤ 100 mW EIRP
RLAN	5.1 GHz UNII-1 (5150 – 5250 MHz)	≤ 40 mW EIRP

Technology	Frequency range	Transmission output/magnetic field strength
Interior Monitoring Radar, RLAN	5.8 GHz UNII-3 (5725 – 5875 MHz)	≤ 40 mW EIRP
Remote Keyless Entry	7.25 GHz UWB (6.0–8.5 GHz)	≤ -41.3 dBm/MHz EIRP mean ≤ 0 dBm/MHz EIRP peak
24 GHz radar	24 GHz ISM band (24.15 – 24.25 GHz)	≤ 100 mW EIRP
76 GHz radar	76 – 77 GHz	≤ 55 dBm peak EIRP
79 GHz radar	77 – 79 GHz	≤ 55 dBm peak EIRP
Compensator ECE DE003 and ECE DE004	GSM (E-GSM 900) GSM (E-GSM 1800)	< +33 dBm < +30 dBm
	UMTS (I, III, VIII)	< +23 dBm
	LTE (B1, B3, B7, B8, B20)	< +23 dBm
HERMES (Hardware for Enhanced Remote, Mobility & Emergency Services)	WLAN (2400-2483.5 MHz) WLAN (5736-5833 MHz)	< 20 dBm < 14 dBm
	GSM (E-GSM 900, Class 4) GSM (E-GSM 1800, Class 1) GSM (E-GSM 900 8-PSK, Class E2) GSM (E-GSM 1800 8-PSK, Class E2)	< +33 dBm (±2 dB) < +30 dBm (±2 dB) < +27 dBm (±3 dB) < +26 dBm (± 3 dB/-4 dB)
	UMTS (2100 WCDMA FDD B1, Class 3)	< +24 dBm (±1 dB/-3 dB)
	LTE (FDD B I, B III, B38, B39, B40, B41, Class 3)	< +23 dBm (±2 dB)
	GPS (1575.42 MHz +/- 2 MHz)	Receiving only
RAMSES (Router And Mobile SErviceS)	GSM (E-GSM 850 / E-GSM 900, Class 4) GSM (E-GSM 1800 / E-GSM 1900, Class 4)	< +32.5 dBm (±1 dB) < +29.5 dBm (±1 dB)
	UMTS (WCDMA FDD I, II, III, IV, V, VIII, XIX, Class 3)	< +23.5 dBm (±1 dB)

Technology	Frequency range	Transmission output/magnetic field strength
	LTE (FDD B1, B2, B3, B4, B5, B7, B8, B9, B18, B19, B21, B28, Class 3)	< +23 dBm (±1 dB)
	LTE (TDD B38, B40, B41, Class 3)	< +23 dBm (±1 dB)
	GNSS (1559 - 1610 MHz)	Receiving only

Further information and updates are available at the following web address:

https://regulatoryradioinformation.corpinter.net/en

Regulatory radio identifiers/specific notes

The tables and sections contain the following regulatory radio information:

- Manufacturer information
- Required regulatory radio identifiers, listed by country/region:
  - Manufacturer's specifications
  - Model designations
  - Radio equipment approval numbers
- Specific information on radio-based vehicle components

Further information and updates are available at the following website:

https://regulatoryradioinformation.corpinter.net/en

OVERVIEW OF MANUFACTURERS

Manufacturer	Manufacturer information
Continental ADC	Continental ADC Automotive Distance Control Systems GmbH, Peter-Dornier-Straße 10, 88131 Lindau, Germany
Bosch	Robert Bosch GmbH, Daimlerstraße 6, 71229 Leonberg, Germany
Bury	BURY SP. Z O.O., UL. WOJSKA POLSKIEGO 4, 39-300 Mielec, Poland
Continental Antenna	Continental Advanced Antenna GmbH, Römerring 1, 31137 Hildesheim, Germany
Continental Automotive	Continental Automotive GmbH, Siemensstraße 12, 93055 Regensburg, Germany
Continental Automotive France	Continental Automotive France SAS, 1 Avenue Paul Ourliac, 31100 Toulouse 1, France
Continental Automotive Hungary	Continental Automotive Hungary Kft., H-1106 Budapest, Napmátka u. 6., Hungary

Manufacturer	Manufacturer information
Continental Automotive Technologies	Continental Automotive Technologies GmbH, VDO-Straße 1, 64832 Babenhausen, Germany
Gentex	Gentex Corporation, 600 North Centennial Street, Zeeland MI 49464, USA
Harman Becker	Harman Becker Automotive Systems GmbH, Becker-Goehring-Straße 18, 76307 Karlsbad, Germany
HELLA	HELLA KGaA Hueck & Co., Rixbecker Straße 75, 59552 Lippstadt, Germany
Hirschmann	Hirschmann Car Communication GmbH, Stuttgarter Straße 45-51, 72654 Neckartenzlingen, Germany
Huf Baolong	Huf Baolong Electronics Bretten GmbH, Gewerbestraße 40, 75015 Bretten, Germany
HUF	HUF Hülsbeck & Fürst GmbH & Co. KG, Steeger Straße 17, 42551 Velbert, Germany
MARQUARDT	MARQUARDT GmbH, Schloßstraße 16, 78604 Rietheim-Weilheim, Germany
Meta System	Meta System S.P.A., Via T. Galimberti 5, 42124 Reggio Emilia, Italy
Molex	Molex CVS Dabendorf GmbH, Märkische Straße 72, 15806 Zossen, Germany
Molex Technologies	Molex Technologies GmbH, Mizarstraße 3, 12529 Schönefeld, Germany
Panasonic	Panasonic Automotive Systems Europe GmbH, Robert-Bosch-Straße 27, 63225 Langen, Germany

Manufacturer	Manufacturer information
Schrader	Schrader Electronics Ltd., 11 Technology Park, Belfast Road, Antrim BT41 1QS, Northern Ireland, United Kingdom
Sennheiser	Sennheiser electronic GmbH & Co. KG, Am Labor 1, 30900 Wedemark, Germany
Valeo	Valeo Telematik und Akustik GmbH, Max-Planck-Straße 28-32, 61381 Friedrichsdorf Germany
Veoneer	Veoneer Sweden AB, Wallentinsvägen 22, 44737 Vårgårda, Sweden
Vitesco	Vitesco Technologies GmbH, Siemensstrasse 12, 93055 Regensburg Germany
WITTE-Velbert	WITTE-Velbert GmbH & Co. KG, Hoeferstr. 3-15, 42551 Velbert, Germany

ALGERIA

Agréé par l'ANF
Référence du Certificat de conformité

Homologué par l'ARPCE
Référence du Certificat de conformité

REGULATORY RADIO IDENTIFIERS

Manufacturer	Model designation	Radio equipment approval number
Continental Antenna	RKE223GNS (locking system)	71/H/ANF/2021
Continental Automotive	CMKG1 (locking system)	122/H/ANF/2021
Continental Automotive	CMKG2 (locking system)	136/H/ANF/2023
Continental Automotive	CMKG3 (locking system)	541/H/ANF/2024
Continental Automotive	MARS Keyless (locking system)	168/H/ANF/2024
HELLA	DM4 (locking system)	123/H/ANF/2021
Hirschmann	920287A (locking system)	106/H/ANF/2020
Hirschmann	920287B (locking system)	107/H/ANF/2020
Hirschmann	920702A (locking system)	133/H/ANF/2022
Huf Baolong	TSSRE4A (tyre pressure sensor)	198/H/ANF/2021
HUF	HUF13145 (locking system)	105/H/ANF/2022
MARQUARDT	DC12A (locking system)	188/H/ANF/2021
MARQUARDT	DC12B (locking system)	189/H/ANF/2021
MARQUARDT	DC12K (locking system)	190/H/ANF/2021
MARQUARDT	MS5 (locking system)	195/H/ANF/2021
MARQUARDT	MS7 (locking system)	146/H/ANF/2024
MARQUARDT	MK1 (locking system)	193/H/ANF/2021
MARQUARDT	MK2 (locking system)	194/H/ANF/2021
MARQUARDT	MK3 (locking system)	300/H/ANF/2024
MARQUARDT	3350.38 (locking system)	186/H/ANF/2021
Schrader	AG5SP4 (tyre pressure sensor)	3681/1-73.OA 1639/DT/DG/ARPT/15
Schrader	AG3PF4 (tyre pressure sensor)	652/1/DT/DG/ARPCE/2020
Schrader	BG3FP4 (tyre pressure sensor)	56/H/ANF/2021
Schrader	GG4T (tyre pressure sensor)	3994/1.69-DA/2098/DT/DG/ARPT/17
Schrader	DG6W2D4 (tyre pressure sensor)	2695/1-NO.431396/DT/DG/ARPT/17
WITTE-Velbert	SDHTAG3NFC (locking system)	32/H/ANF/2021

ARGENTINA

REGULATORY RADIO IDENTIFIERS

Manufacturer	Model designation	Radio equipment approval number
Continental ADC	ARS4-A (radar sensor)	C-18005
Continental ADC	ARS4-B (radar sensor)	C-17908
Continental ADC	ARS6-A (radar sensor)	H-28818
Continental ADC	ARS441DP10 (radar sensor)	C-2377
Continental Antenna	RKE213E1 (aerial amplifier)	H-26206
Continental Antenna	RKE223E1 (aerial amplifier)	H-24637
Continental Automotive	CMKG1 (locking system)	H-24376
Continental Automotive	CMKG2 (locking system)	H-28998
Continental Automotive	CMKG3 (locking system)	H-31461
Continental Automotive	MARS Keyless (locking system)	H-17929
Continental Automotive	D-WMI2020A (control unit)	H-23974
Continental Automotive Technologies	NTG7Q MID LF2 (head unit)	C-29127
Continental Automotive Technologies	NTG7Q HIGH LF2 (head unit)	C-29126
Continental Automotive Technologies	NTG7Q PREMIUM LF2 (head unit)	C-29128
Continental Automotive Technologies	NTG7Q PREMIUMPLUS LF2 (head unit)	C-29930
HELLA	DM4 (locking system)	H-17845
Hirschmann	920287A (locking system)	H-15694
Hirschmann	920287B (locking system)	H-15695
Hirschmann	920702A (locking system)	H-28310
Huf Baolong	TSSRE4A (tyre pressure sensor)	H-27592
HUF	HUF13482 (locking system)	H-31125
HUF	HUF13145 (locking system)	H-28067
HUF	HUF14632 (locking system)	H-15541
HUF	HUF4761 (locking system)	H-11545
MARQUARDT	DC12A (locking system)	H-17689
MARQUARDT	DC12B (locking system)	H-21034
MARQUARDT	DC12K (locking system)	H-21035
MARQUARDT	MS2 (locking system)	H-17598
MARQUARDT	MS4 (locking system)	H-23101
MARQUARDT	MS5 (locking system)	H-24933
MARQUARDT	MS6 (locking system)	H-30441

Manufacturer	Model designation	Radio equipment approval number
MARQUARDT	MS7 (locking system)	H-29810
MARQUARDT	MK1 (locking system)	H-17213
MARQUARDT	MK2 (locking system)	H-17212
MARQUARDT	MK3 (locking system)	H-30378
MARQUARDT	3350.38 (locking system)	H-23166
MARQUARDT	MU3 (locking system)	H-30159
MARQUARDT	MUB1 (locking system)	H-30622
Schrader	AG5SP4 (tyre pressure sensor)	H-4788
Schrader	AG3PF4 (tyre pressure sensor)	H-23292
Schrader	BG3FP4 (tyre pressure sensor)	H-25586
Schrader	GG4T (tyre pressure sensor)	H-20495
Schrader	DG6W2D4 (tyre pressure sensor)	H-20959
Valeo	ARTEMIS-SUB-01 (locking system)	H-31497
Vitesco	HFA30 (radar sensor)	H-30148
WITTE-Velbert	SDHTAG3NFC (locking system)	H-24664

AUSTRALIA

REGULATORY RADIO IDENTIFIERS

Manufacturer	Model designation
Continental ADC	ARS4-A (radar sensor)
Continental ADC	ARS6-A (radar sensor)
Continental ADC	ARS4-C (radar sensor)
Continental ADC	ARS441DP10 (radar sensor)
Bosch	MRR1Rear (radar sensor)
Bosch	MRRe14FCR (radar sensor)
Bosch	F5CP12 (radar sensor)
Continental Antenna	RKE213E1 (aerial amplifier)
Continental Antenna	RKE223E1 (aerial amplifier)
Continental Antenna	2032V00ME1 (aerial amplifier)
Continental Automotive	CMKG1 (locking system)
Continental Automotive	CMKG2 (locking system)
Continental Automotive	CMKG3 (locking system)
Continental Automotive	MARS Keyless (locking system)
Continental Automotive Technologies	NTG7Q MID LF2 (head unit)
Continental Automotive Technologies	NTG7Q HIGH LF2 (head unit)
Continental Automotive Technologies	NTG7Q PREMIUM LF2 (head unit)

Manufacturer	Model designation
Hirschmann	920287A (locking system)
Hirschmann	920287B (locking system)
Hirschmann	920702A (locking system)
Huf Baolong	TSSRE4A (tyre pressure sensor)
HUF	HUF13145 (locking system)
MARQUARDT	MS6 (locking system)
MARQUARDT	MS7 (locking system)
MARQUARDT	MK1 (locking system)
MARQUARDT	MK2 (locking system)
MARQUARDT	MK3 (locking system)
MARQUARDT	3350.38 (locking system)
MARQUARDT	MU3 (locking system)
MARQUARDT	MUB1 (locking system)
Schrader	AG5SP4 (tyre pressure sensor)
Schrader	AG3PF4 (tyre pressure sensor)
Schrader	BG3FP4 (tyre pressure sensor)
Schrader	GG4T (tyre pressure sensor)
Schrader	DG6W2D4 (tyre pressure sensor)

Manufacturer	Model designation
Veoneer	77V12BSM (radar sensor)
Veoneer	77V12CRN (radar sensor)
Veoneer	77V125CRN (radar sensor)
Veoneer	MMRV1 (radar sensor)

BAHAMAS

REGULATORY RADIO IDENTIFIERS

Manufacturer	Model designation	Radio equipment approval number
Continental ADC	ARS4-A (radar sensor)	URCA_TA_2014_082
Continental ADC	ARS6-A (radar sensor)	URCA_TA_2023_211
Continental ADC	ARS4-C (radar sensor)	URCA_TA_2019_167
Bosch	MRR1Rear (radar sensor)	URCA_TA/2017_184
Bosch	MRRe14FCR (radar sensor)	URCA_TA/2017_157
Bosch	FR5CPCCF (radar sensor)	URCA_TA_2019_195
Bosch	F5CP12 (radar sensor)	URCA_TA_2022_077
Continental Automotive	CMKG1 (locking system)	URCA_TA/2020_068
Continental Automotive	CMKG2 (locking system)	URCA_TA/2023_028
Continental Automotive	CMKG3 (locking system)	URCA_TA/2024_213

Manufacturer	Model designation	Radio equipment approval number
Continental Automotive	MARS Keyless (locking system)	URCA_TA/2017_119
Continental Antenna	RKE213E1 (aerial amplifier)	UCRA_TA/2016_009
Continental Antenna	RKE223E1GNS (aerial amplifier)	UCRA_TA/2020_032
Continental Antenna	2032V00ME1 (aerial amplifier)	URCA_TA/2024_248
HELLA	DM4 (locking system)	URCA_TA/2017_078
HELLA	RS6 (locking system)	URCA_TA_2023_174
Hirschmann	920287A (locking system)	URCA_TA/2019_053
Hirschmann	920287B (locking system)	URCA_TA/2019_052
Hirschmann	920702A (locking system)	URCA_TA/2022_043
HUF	HUF13145 (locking system)	URCA_TA_2022_057
HUF	HUF14632 (locking system)	URCA_TA/2015_087
HUF	HUF4761 (locking system)	URCA_TA/2015_087
Huf Baolong	TSSRE4A (tyre pressure sensor)	URCA_TA/2017_094
MARQUARDT	DC12A (locking system)	URCA_TA_2017_042
MARQUARDT	DC12B (locking system)	URCA_TA_2019_128
MARQUARDT	DC12K (locking system)	URCA_TA_2019_129
MARQUARDT	MS2 (locking system)	URCA_TA/2017_021
MARQUARDT	MS4 (locking system)	URCA_TA_2019_141

Manufacturer	Model designation	Radio equipment approval number
MARQUARDT	MS5 (locking system)	URCA_TA_2020_141
MARQUARDT	MS6 (locking system)	URCA_TA_2024-035
MARQUARDT	MS7 (locking system)	URCA_TA_2024-066
MARQUARDT	MK1 (locking system)	URCA_TA/2015_031
MARQUARDT	MK2 (locking system)	URCA_TA/2015_033
MARQUARDT	MK3 (locking system)	URCA_TA_2024_025
MARQUARDT	3350.38 (locking system)	URCA_TA/2019_250
MARQUARDT	MU3 (locking system)	URCA_TA/2023_245
MARQUARDT	MUB1 (locking system)	URCA_TA/2024_060
Schrader	AG5SP4 (tyre pressure sensor)	URCA_TA_TA/2015_009
Schrader	AG3PF4 (tyre pressure sensor)	URCA_TA_2019_101
Schrader	BG3FP4 (tyre pressure sensor)	URCA_TA_2021_001
Schrader	GG4T (tyre pressure sensor)	URCA_TA_2020_046
Schrader	DG6W2D4 (tyre pressure sensor)	URCA_TA_2019_247
Valeo	ARTEMIS-SUB-01 (locking system)	URCA_TA_2024_056
Veoneer	77V12BSM (radar sensor)	URCA_TA_2019_169
Veoneer	77V12CRN (radar sensor)	URCA_TA_2019_168
Veoneer	77V125CRN (radar sensor)	URCA_TA_2021_027

Manufacturer	Model designation	Radio equipment approval number
Veoneer	MMRV1 (radar sensor)	URCA_TA/2015_063
Vitesco Technologies	HFA30 (radar sensor)	URCA_TA_2023_247
WITTE-Velbert	SDHTAG3NFC (locking system)	URCA_TA_2020_056

BELARUS

REGULATORY RADIO IDENTIFIERS

Manufacturer	Model designation
Continental ADC	ARS4-A (radar sensor)
Continental ADC	ARS4-C (radar sensor)
Bosch	MRR1Rear (radar sensor)
Bosch	MRRe14FCR (radar sensor)
Bosch	FR5CPCCF (radar sensor)
Bosch	F5CP12 (radar sensor)
Continental Antenna	RKE213E1 (aerial amplifier)
Continental Antenna	RKE223E1GNS (aerial amplifier)
Continental Antenna	2032V00ME1 (aerial amplifier)
Continental Automotive	CMKG1 (locking system)
Continental Automotive	CMKG2 (locking system)
Continental Automotive	CMKG3 (locking system)
Continental Automotive	MARS Keyless (locking system)
Harman Becker	HERMES 3.0 (communication module)
HELLA	DM4 (locking system)
HUF	HUF13145 (locking system)
MARQUARDT	DC12A (locking system)
MARQUARDT	DC12B (locking system)
MARQUARDT	DC12K (locking system)
MARQUARDT	MS2 (locking system)
MARQUARDT	MS4 (locking system)
MARQUARDT	MS5 (locking system)
MARQUARDT	MS7 (locking system)
MARQUARDT	MK1 (locking system)
MARQUARDT	MK2 (locking system)
MARQUARDT	MK3 (locking system)
MARQUARDT	3350.38 (locking system)
MARQUARDT	MU3 (locking system)
MARQUARDT	MUB1 (locking system)

Manufacturer	Model designation
Veoneer	77V12BSM (radar sensor)
Veoneer	77V12CRN (radar sensor)
Veoneer	77V125CRN (radar sensor)
Veoneer	MMRV1 (radar sensor)
WITTE-Velbert	SDHTAG3NFC (locking system)

BOTSWANA

REGULATORY RADIO IDENTIFIERS

Manufacturer	Model designation	Radio equipment approval number
Continental ADC	ARS4-A (radar sensor)	BOCRA/TA/2018/2026
Continental ADC	ARS6-A (radar sensor)	BOCRA/TA/2022/7599
Continental ADC	ARS4-C (radar sensor)	BOCRA/TA/2020/5186
Bosch	MRRe14FCR (radar sensor)	BOCRA/TA/2019/4674
Bosch	FR5CPCCF (radar sensor)	BOCRA/TA/2019/4975
Bosch	MRR1Rear (radar sensor)	BOCRA/TA/2017/3788
Bosch	F5CP12 (radar sensor)	BOCRA/TA/2022/7110
Continental Antenna	RKE213E1 (aerial amplifier)	BOCRA/TA/2019/4387
Continental Antenna	RKE223E1GNS (aerial amplifier)	BOCRA/TA/2019/5050
Continental Antenna	2032V00ME1 (aerial amplifier)	BOCRA/TA/2024/1366
Continental Automotive	CMKG1 (locking system)	BOCRA/TA/2019/5075
Continental Automotive	CMKG2 (locking system)	BOCRA/TA/2023/8144
Continental Automotive	CMKG3 (locking system)	BOCRA/TA/2024/1414
Continental Automotive	MARS Keyless (locking system)	BOCRA/TA/2019/4661
HELLA	DM4 (locking system)	BOCRA/TA/2019/4662
HELLA	RS6 (locking system)	BOCRA/TA/2023/8610
Hirschmann	920287A (locking system)	BOCRA/TA/2019/4724
Hirschmann	920287B (locking system)	BOCRA/TA/2019/4723
Hirschmann	920702A (locking system)	BOCRA/TA/2022/7099
HUF	HUF13145 (locking system)	HUF13145
HUF	HUF4761 (locking system)	BOCRA/TA/2019/4664
MARQUARDT	DC12A (locking system)	BOCRA/TA/2019/4389
MARQUARDT	DC12B (locking system)	BOCRA/TA/2019/4388
MARQUARDT	DC12K (locking system)	BOCRA/TA/2019/4390
MARQUARDT	MS2 (locking system)	BOCRA/TA/2019/5135
MARQUARDT	MS4 (locking system)	BOCRA/TA/2019/4758
MARQUARDT	MS5 (locking system)	BOCRA/TA/2020/5473
MARQUARDT	MS6 (locking system)	BOCRA/TA/2024/259

Manufacturer	Model designation	Radio equipment approval number
MARQUARDT	MS7 (locking system)	BOCRA/TA/2024/374
MARQUARDT	MK1 (locking system)	BOCRA/TA/2019/4359
MARQUARDT	MK2 (locking system)	BOCRA/TA/2019/4360
MARQUARDT	MK3 (locking system)	BOCRA/TA/2024/373
MARQUARDT	3350.38 (locking system)	BOCRA/TA/2019/4687
MARQUARDT	MU3 (locking system)	BOCRA/TA/2023/8771
MARQUARDT	MUB1 (locking system)	BOCRA/TA/2024/386
Veoneer	77V12BSM (radar sensor)	BOCRA/TA/2019/4975
Veoneer	77V12CRN (radar sensor)	BOCRA/TA/2019/4980
Veoneer	77V125CRN (radar sensor)	BOCRA/TA/2021/6191
WITTE-Velbert	SDHTAG3NFC (locking system)	BOCRA/TA/2020/5342

BRAZIL

Information on two-way radio systems in the vehicle:

These systems are not protected against harmful interference and must not cause interference in properly approved systems.

REGULATORY RADIO IDENTIFIERS

Manufacturer	Model designation	Radio equipment approval number
Continental ADC	ARS4-A (radar sensor)	02217-14-06068
Continental ADC	ARS441DP10 (radar sensor)	06783-19-02496
Bury	A167 820 19 03 /A247 820 84 02 (mobile phone charger)	20280-23-04457
Bury	A247 820 86 02 (mobile phone charger)	20288-23-04457
Bury	A174 820 42 00 (USB-C charger)	07785-24-04457
Continental Antenna	RKE223E1 (aerial amplifier)	03691-15-05298
Continental Antenna	RKE213E1 (aerial amplifier)	07359-21-12817
Continental Antenna	RKE213E1 (aerial amplifier)	3691-15-5298
Continental Automotive	CMKG1 (locking system)	00325-20-02149
Continental Automotive	CMKG2 (locking system)	01334-23-02149
Continental Automotive	CMKG3 (locking system)	10003-24-02149
Continental Automotive	MARS Keyless (locking system)	03189-17-02856
Continental Automotive Technologies	NTG7Q MID LF2 (head unit)	12520-23-06353
Continental Automotive Technologies	NTG7Q HIGH LF2 (head unit)	12525-23-06353

Manufacturer	Model designation	Radio equipment approval number
Continental Automotive Technologies	NTG7Q PREMIUM LF2 (head unit)	12522-23-06353
Continental Automotive Technologies	NTG7Q PREMIUMPLUS LF2 (head unit)	17830-23-06353
HELLA	DM4 (locking system)	04689-17-05364
Hirschmann	920287A (locking system)	1855-12-5762
Hirschmann	920287B (locking system)	1787-12-8058
Huf Baolong	TSSRE4A (tyre pressure sensor)	08539-19-03616
HUF	HUF13482 (locking system)	07889-24-06643
HUF	HUF13145 (locking system)	HUF13145
HUF	HUF14632 (locking system)	03627-15-06643
HUF	HUF4761 (locking system)	00053-13-06643
MARQUARDT	DC12A (locking system)	01333-17-02930
MARQUARDT	DC12B (locking system)	01395-11-02930
MARQUARDT	DC12K (locking system)	01392-11-02930
MARQUARDT	MS2 (locking system)	00616-17-02930
MARQUARDT	MS4 (locking system)	06218-19-02930
MARQUARDT	MS5 (locking system)	11149-20-02930
MARQUARDT	MS6 (locking system)	02565-24-02930
MARQUARDT	MS7 (locking system)	05883-24-02930
MARQUARDT	3350.38 (locking system)	03149-19-02930
MARQUARDT	MK1 (locking system)	03756-15-02930
MARQUARDT	MK2 (locking system)	03757-15-02930
MARQUARDT	MK3 (locking system)	06050-24-02930
MARQUARDT	MU3 (locking system)	05884-24-02930
MARQUARDT	MUB1 (locking system)	05886-24-02930
Molex Technologies	HUB-8 (mobile phone charger)	19286-23-12116
Molex Technologies	HUB-9d / HUB-9e (mobile phone charger)	19287-23-12116
Vitesco Technologies	HFA30 (radar sensor)	18924-23-15869
WITTE-Velbert	SDHTAG3NFC (locking system)	03034-20-07018

Additional specific information

Rear Seat Entertainment System:

This system is not protected against harmful interference and must not cause interference in properly approved systems.

This product is approved by ANATEL in accordance with the procedures set out in Resolution 242/2000 and complies with the relevant technical requirements. You will find additional information on the ANATEL website https://www.anatel.gov.br

Charging unit for the wireless charging of mobile communication devices (WMI):

This device operates in secondary mode, which means it has no protection against harmful interference, not even from stations of the same type, and must not cause interference with systems operating on a primary basis.

This product is approved in accordance with the procedures defined in Directive 242/2000 by the Brazilian telecommunications agency ANATEL and complies with the applicable technical requirements.

Additional information can be found on the ANATEL website www.anatel.gov.br.

Telecommunications products:

This product has been approved by Anatel in accordance with the procedures stipulated in Resolution No. 715/2020, and satisfies all applied technical requirements.

Additional information can be found on the ANATEL website www.anatel.gov.br.

BRUNEI DARUSSALAM

REGULATORY RADIO IDENTIFIERS

Manufacturer	Model designation	Radio equipment approval number
Continental ADC	ARS4-C (radar sensor)	DTA-004005
Continental ADC	ARS6-A (radar sensor)	DTA-020359
Bosch	FR5CPCCF (radar sensor)	DTA-004222
Bosch	LRR3 (radar sensor)	DTA-011039
Bosch	MRR1Rear (radar sensor)	DTA-006601
Bosch	MRRe14FCR (radar sensor)	DTA-006678
Bosch	F5CP12 (radar sensor)	DTA-018042
Continental Antenna	RKE213E1 (aerial amplifier)	DTA-006665
Continental Antenna	RKE223E1GNS (aerial amplifier)	DTA-004998
Continental Antenna	2032V00ME1 (aerial amplifier)	DTA-038252
Continental Automotive	CMKG1 (locking system)	DTA-005043
Continental Automotive	CMKG2 (locking system)	DTA-023993
Continental Automotive	CMKG3 (locking system)	DTA-037547
Continental Automotive	MARS Keyless (locking system)	DTA-017264
HELLA	DM4 (locking system)	DTA-020187

Manufacturer	Model designation	Radio equipment approval number
HELLA	RS6 (locking system)	AA-000081
Hirschmann	920287A (locking system)	DTA-001661
Hirschmann	920287B (locking system)	DTA-000794
Hirschmann	920702A (locking system)	DTA-018051
Huf Baolong	TSSRE4A (tyre pressure sensor)	DTA-011045
Huf Baolong	TSSSG4G6b (tyre pressure monitoring system control unit)	DTA-003757
HUF	HUF13145 (locking system)	DTA-017926
HUF	HUF14632 (locking system)	DTA-006138
HUF	HUF4761 (locking system)	DTA-000615
MARQUARDT	DC12A (locking system)	DTA-019403
MARQUARDT	DC12B (locking system)	DTA-000068
MARQUARDT	DC12K (locking system)	DTA-000066
MARQUARDT	MS2 (locking system)	LPD-38890
MARQUARDT	MS4 (locking system)	DTA-003525
MARQUARDT	MS5 (locking system)	DTA-005850
MARQUARDT	MS7 (locking system)	DTA-032943

Manufacturer	Model designation	Radio equipment approval number
MARQUARDT	MK1 (locking system)	DTA-011312
MARQUARDT	MK2 (locking system)	DTA-011313
MARQUARDT	MK3 (locking system)	DTA-031059
MARQUARDT	3350.38 (locking system)	DTA-032673
MARQUARDT	MU3 (locking system)	DTA-029861
MARQUARDT	MUB1 (locking system)	DTA-032674
Schrader	AG5SP4 (tyre pressure sensor)	DTA-005291
Schrader	AG3PF4 (tyre pressure sensor)	DTA-003581
Schrader	BG3FP4 (tyre pressure sensor)	DRQ-D-JATI-07-2000-109000
Schrader	DG6W2D4 (tyre pressure sensor)	DTA-025258
Schrader	GG4T (tyre pressure sensor)	DTA-025258
Schrader	BG3FP4 (tyre pressure sensor)	DTA-025258
Schrader	MFR (tyre pressure monitoring system control unit)	DTA-003893
Schrader	MFR3 (tyre pressure monitoring system control unit)	DRQ-D-MAJU-02-2011-111083
Valeo	ARTEMIS-SUB-01 (locking system)	DTA-031587

Manufacturer	Model designation	Radio equipment approval number
Veoneer	77V12BSM (radar sensor)	DTA-004000
Veoneer	77V12CRN (radar sensor)	DTA-003999
Veoneer	77V125CRN (radar sensor)	DTA-010423
Veoneer	77GHz MMRV1 (radar sensor)	DTA-006216
Vitesco Technologies	HFA30 (radar sensor)	DTA-030296
WITTE-Velbert	SDHTAG3NFC (locking system)	DTA-005628

EURASIAN ECONOMIC UNION

REGULATORY RADIO IDENTIFIERS

Manufacturer	Model designation
Continental ADC	ARS4-A (radar sensor)
Continental ADC	ARS4-C (radar sensor)
Continental ADC	ARS6-A (radar sensor)
Continental ADC	ARS441DP10 (radar sensor)
Bosch	FR5CPCCF (radar sensor)
Bosch	LRR3 (radar sensor)
Bosch	MRR1Rear (radar sensor)

Manufacturer	Model designation
Bosch	MRRe14FCR (radar sensor)
Bosch	F5CP12 (radar sensor)
Continental Antenna	RKE213E1 (aerial amplifier)
Continental Antenna	RKE223E1GNS (aerial amplifier)
Continental Automotive	MARS Keyless (locking system)
Continental Automotive	CMKG1 (locking system)
Continental Automotive	CMKG2 (locking system)
Continental Automotive	CMKG3 (locking system)
HELLA	DM4 (locking system)
Hirschmann	920287A (locking system)
Hirschmann	920287B (locking system)
Hirschmann	920702A (locking system)
Huf Baolong	TSSRE4A (tyre pressure sensor)
HUF	HUF13145 (locking system)
HUF	HUF4761 (locking system)
HUF	HUF14632 (locking system)
HUF	HUF13482 (locking system)
MARQUARDT	DC12A (locking system)

Manufacturer	Model designation
MARQUARDT	DC12B (locking system)
MARQUARDT	DC12K (locking system)
MARQUARDT	MS2 (locking system)
MARQUARDT	MS4 (locking system)
MARQUARDT	MS5 (locking system)
MARQUARDT	MS6 (locking system)
MARQUARDT	MS7 (locking system)
MARQUARDT	MK1 (locking system)
MARQUARDT	MK2 (locking system)
MARQUARDT	MK3 (locking system)
MARQUARDT	3350.38 (locking system)
MARQUARDT	MU3 (locking system)
MARQUARDT	MUB1 (locking system)
Schrader	AG5SP4 (tyre pressure sensor)
Schrader	AG3PF4 (tyre pressure sensor)
Schrader	BG3FP4 (tyre pressure sensor)
Schrader	GG4T (tyre pressure sensor)
Schrader	DG6W2D4 (tyre pressure sensor)

Manufacturer	Model designation
Valeo	ARTEMIS-SUB-01 (locking system)
Veoneer	77GHz MMRV1 (radar sensor)
Veoneer	77V12BSM (radar sensor)
Veoneer	77V12CRN (radar sensor)
Veoneer	77V125CRN (radar sensor)
WITTE-Velbert	SDHTAG3NFC (locking system)

GHANA

REGULATORY RADIO IDENTIFIERS

Manufacturer	Model designation	Radio equipment approval number
		NCA APPROVED
Continental ADC	ARS4-B (radar sensor)	1R3-1M-7E1-160
Continental ADC	ARS4-C (radar sensor)	ZRO-1H-7E3-152
Continental ADC	ARS6-A (radar sensor)	7E6-M1-16C-SRD
Continental ADC	ARS441DP10 (radar sensor)	ZRO-1H-7E3-152
Bosch	FR5CPCCF (radar sensor)	ZRO-M8-7E3-230
Bosch	F5CP12 (radar sensor)	7E6-M1-X9B-SRD
Continental Antenna	RKE213E1 (aerial amplifier)	ZRO-M8-7E3-X53

Manufacturer	Model designation	Radio equipment approval number
Continental Antenna	RKE223E1GNS (aerial amplifier)	ZRO-M8-7E3-225
Continental Antenna	2032V00ME1 (aerial amplifier)	M7-7E8-26C-RTH
Continental Automotive	CMKG1 (locking system)	ZRO-M8-7E3-277
Continental Automotive	CMKG2 (locking system)	7M-7E7-X25-DSR
Continental Automotive	CMKG3 (locking system)	HT-7E8-276-THE
Continental Automotive	MARS Keyless (locking system)	BR3-1M-GE2-16A
Continental Automotive Technologies	NTG7Q MID LF2 (head unit)	7M-7E7-X09-DSR
Continental Automotive Technologies	NTG7Q HIGH LF2 (head unit)	7M-7E7-X05-DSR
Continental Automotive Technologies	NTG7Q PREMIUM LF2 (head unit)	7M-7E7-X03-DSR
HELLA	DM4 (locking system)	BR3-1M-GE2-157
Hirschmann	920287A (locking system)	ZRO-M8-7E3-X45
Hirschmann	920287B (locking system)	ZRO-M8-7E3-X47
HUF	HUF13145 (locking system)	7E6-M1-X14-SRD
HUF	HUF4761 (locking system)	EX6-6M-GE2-16C
MARQUARDT	DC12A (locking system)	ZRO-M8-7E3-X50
MARQUARDT	DC12B (locking system)	ZRO-M8-7E3-X51
MARQUARDT	DC12K (locking system)	ZRO-M8-7E3-X52
MARQUARDT	MS2 (locking system)	BR3-1M-GE-129
MARQUARDT	MS4 (locking system)	ZRO-1H-7E3-26E
MARQUARDT	MS5 (locking system)	SRO-1M-7E4-11B
MARQUARDT	MS6 (locking system)	M1-7E8-X42-SRH
MARQUARDT	MS7 (locking system)	M1-7E8-X9F-SRH
MARQUARDT	MK1 (locking system)	ZRO-M8-7E3-X4A
MARQUARDT	MK2 (locking system)	ZRO-M8-7E3-X4C
MARQUARDT	MK3 (locking system)	HS-7E7-262-DSR
MARQUARDT	MU3 (locking system)	HS-7E7-XE5-DSR
MARQUARDT	MUB1 (locking system)	M1-7E8-X9D-SRH
MARQUARDT	3350.38 (locking system)	ZRO-M8-7E3-X3C
MARQUARDT	MU3 (locking system)	HS-7E7-XE5-DSR
Valeo	ARTEMIS-SUB-01 (locking system)	7M-7E7-272-DSR
Veoneer	77V12BSM (radar sensor)	ZRO-1H-7E3-142
Veoneer	77V12CRN (radar sensor)	ZRO-M8-7E3-230
Veoneer	77V125CRN (radar sensor)	7E5-7M-X72-RDR
Vitesco Technologies	HFA30 (radar sensor)	7M-7E7-134-DSR
WITTE-Velbert	SDHTAG3NFC (locking system)	SRO-1M-7E4-X59

INDONESIA

⚠ Dilarang melakukan perubahan spesifikasi yang dapat menimbulkan gangguan fisik dan/atau elektromagnetik terhadap lingkungan sekitarnya

REGULATORY RADIO IDENTIFIERS

Manufacturer	Model designation	Radio equipment approval number
Bury	MB-WMI2024 (control unit)	100200/SDPPI/2024 7163
Continental ADC	ARS3-A (radar sensor)	97128/SDPPI/2024 7163
Continental ADC	ARS3-B (radar sensor)	97129/SDPPI/2024 7163
Continental ADC	ARS4-B (radar sensor)	97127/ SDPPI/ 2024 7163
Continental ADC	ARS4-C (radar sensor)	68676/SDPPI/2020 7163
Continental ADC	ARS4-A (radar sensor)	90362/SDPPI/2023 7163
Continental ADC	ARS6-A (radar sensor)	84770/SDPPI/2022 7163
Continental ADC	ARS441DP10 (radar sensor)	89748/SDPPI/2023 7163
Bosch	LRR3 (radar sensor)	74264/SDPPI/2021 7163
Bosch	MRR1Rear (radar sensor)	74267/SDPPI/2021 7163
Bosch	MRRevo14F (radar sensor)	74265/SDPPI/2021 7163
Bosch	MRRe14FCR (radar sensor)	74266/SDPPI/2021 7163
Bosch	FR5CPCCF (radar sensor)	67882/SDPPI/2020 7163

Manufacturer	Model designation	Radio equipment approval number
Bosch	F5CP12 (radar sensor)	86858/SDPPI/2022 84754
Continental Antenna	RKE213E1 (aerial amplifier)	103697/SDPPI/2024 7163
Continental Antenna	RKE223E1GNS (aerial amplifier)	86957/ SDPPI/ 2022 10325
Continental Automotive	CMKG1 (locking system)	87836/SDPPI/2023 7163
Continental Automotive	CMKG2 (locking system)	88721/SDPPI/2023 7163
Continental Automotive	CMKG3 (locking system)	106918/SDPPI/2025 7163
Continental Automotive	MARS Keyless (locking system)	69379/SDPPI/2020 7163

Manufacturer	Model designation	Radio equipment approval number
Continental Automotive	CORTIS08 (tyre pressure monitoring system control unit)	97476//SDPPI/2024 7163
Continental Automotive	D-WMI2020A (control unit)	66678/SDPPI/2020 7163
Continental Automotive	NTG7 MID (Headunit) Production: Hungary	92192/SDPPI/2023 7163
Continental Automotive	NTG7 HIGH (Headunit) Production: Hungary	92190/SDPPI/2023 7163
Continental Automotive	NTG7 PREMIUM (Headunit) Production: Hungary	92188/SDPPI/2023 7163
Continental Automotive	NTG7 PREMIUM PLUS (Headunit) Production: Hungary	92195/SDPPI/2023 7163
Continental Automotive France	CORTIS08 (tyre pressure monitoring system control unit)	97476/SDPPI/2024 7163
Continental Automotive Technologies	NTG7Q MID LF2 (head unit)	88477/SDPPI/2023 7163
Continental Automotive Technologies	NTG7Q HIGH LF2 (head unit)	88579/SDPPI/2023 7163

Manufacturer	Model designation	Radio equipment approval number
Continental Automotive Technologies	NTG7Q PREMIUM LF2 (head unit)	88478/SDPPI/2023 7163
Harman Becker	NTG6N ENTRY/MID (Headunit) Production: Germany	64019/SDPPI/2019 7163
Harman Becker	NTG6N HIGH (Headunit) Production: Germany	64018/SDPPI/2019 7163
Harman Becker	NTG6N ENTRY/MID (Headunit) Production: Hungary	63775/SDPPI/2019 7163
Harman Becker	NTG6N HIGH (Headunit) Production: Hungary	63774/SDPPI/2019 7163
Harman Becker	NTG7 MID (Headunit)	65544/SDPPI/2020 7163
Harman Becker	NTG7 HIGH (Headunit)	70513/SDPPI/2020 7163
Harman Becker	NTG7 PREMIUM (Headunit)	65543/SDPPI/2020 7163
Harman Becker	NTG7 PREMIUM PLUS (Headunit)	70512/SDPPI/2020 7163

Manufacturer	Model designation	Radio equipment approval number
Harman Becker	NTG7 RSU (control unit)	66387/SDPPI/2020 7163
HELLA	DM4 (locking system)	69378/SDPPI/2020 7163
Huf Baolong	TSSRE4A (tyre pressure sensor)	72438/SDPPI/2021 7163
Hirschmann	920287A (locking system)	71369 /SDPPI/2020 7163
Hirschmann	920287B (locking system)	72974 /SDPPI/2021 7163
Hirschmann	920702A (locking system)	82675/SDPPI/2022 7163
HUF	HUF13482 (locking system)	104103/SDPPI/2024 7163

Manufacturer	Model designation	Radio equipment approval number
HUF	HUF14632 (locking system)	78368/SDPPI/2021 7163
HUF	HUF4761 (locking system)	26742/SDPPI/2015 3533
HUF	HUF13145 (NFC reader)	83988/SDPPI/2022
MARQUARDT	DC12A (locking system)	67373/SDPPI/2020 7163
MARQUARDT	DC12B (locking system)	80676/SDPPI/2022 7163
MARQUARDT	DC12K (locking system)	80621/SDPPI/2022 7163
MARQUARDT	MS2 (locking system)	67372/SDPPI/2020 7163

Manufacturer	Model designation	Radio equipment approval number
MARQUARDT	MS4 (locking system)	64126/SDPPI/2019 7163
MARQUARDT	MS5 (locking system)	90695/SDPPI/2023 7163 7163
MARQUARDT	MS6 (locking system)	102883/SDPPI/2024 7163 7163
MARQUARDT	MS7 (locking system)	102735/SDPPI/2024 7163 7163
MARQUARDT	MK1 (locking system)	100207/ SDPPI/ 2024 7163
MARQUARDT	MK2 (locking system)	100209/ SDPPI/ 2024 7163
MARQUARDT	MK3 (locking system)	102736/ SDPPI/ 2024 7163

Manufacturer	Model designation	Radio equipment approval number
MARQUARDT	3350.38 (locking system)	82980/SDPPI/2022 7163
Molex	WCH-302b (control unit)	71668/SDPPI/2020 7163
Molex	WCH-302d (control unit)	71220/SDPPI/2020 7163
Molex	WCH-302e (control unit)	71669/SDPPI/2020 7163
Panasonic	DAIRSE (control unit)	63550/SDPPI/2019
Schrader	GG4T (tyre pressure sensor)	72023/SDPPI/2020 9338
Schrader	AG5SP4 (tyre pressure sensor)	75465/SDPPI/2021 7163
Schrader	BG3FP4 (tyre pressure sensor)	72765/SDPP/2021 7163
Schrader	DG6W2D4 (tyre pressure sensor)	57058/SDPPI/2018 3612

Manufacturer	Model designation	Radio equipment approval number
Schrader	MC34MA4 (tyre pressure monitoring system control unit)	25626/SDPPI/2015 3612
Schrader	AG3PF4 (tyre pressure sensor)	62396/SDPPI/2020 7163
Schrader	GG4T (tyre pressure sensor)	72023/SDPPI/2020 7163
Veoneer	77GHz MMRV1 (radar sensor)	74749/SDPPI/2021 7163
Veoneer	77V12CRN (radar sensor)	66830/SDPPI/2020 7163
Veoneer	77V125CRN (radar sensor)	78366/SDPPI/2021 7163

Manufacturer	Model designation	Radio equipment approval number
Veoneer	77V12BSM (radar sensor)	66792/SDPPI/2020 7163
WITTE-Velbert	SDHTAG3NFC (locking system)	67233/SDPPI/2020 10325

ISRAEL

REGULATORY RADIO IDENTIFIERS

Manufacturer	Model designation	Radio equipment approval number
		Approval number of the Ministry of Communications:
Continental ADC	ARS4-A (radar sensor)	55-09697
Continental ADC	ARS6-A (radar sensor)	55-14225
Continental ADC	ARS4-C (radar sensor)	55-07525
Bosch	FR5CPCCF (radar sensor)	55-08783
Bosch	LRR3 (radar sensor)	55-08334
Bosch	MRR1Rear (radar sensor)	55-08333
Bosch	MRRe14FCR (radar sensor)	55-08395
Bosch	F5CP12 (radar sensor)	55-12854
Bosch	MBCI2LS3PR1 (head unit)	51-91228
Bosch	MBCI2LS4PR1 (head unit)	51-91226
Continental Antenna	RKE213E1 (aerial amplifier)	56-10830
Continental Antenna	RKE223E1GNS (aerial amplifier)	51-97825
Continental Automotive	D-WMI2017B (control unit)	51-75654
Continental Automotive	D-WMI2017A (control unit)	51-75367
Continental Automotive	D-WMI2016A (control unit)	55-08177
Continental Automotive	D-WMI2020A (control unit)	55-08179
Continental Automotive	RKE213E1 (Antennenverstärker)	55-13929
Continental Automotive	RKE223E1GNS (Antennenverstärker)	51-97825
Continental Automotive	CMKG1 (Schließsystem)	51-87871
Continental Automotive	CMKG2 (Schließsystem)	51-92059
Continental Automotive	CMKG3 (Schließsystem)	56-10932
Continental Automotive	MARS Keyless (Schließsystem)	56-04831
Continental Automotive Technologies	NTG7Q MID LF2 (head unit)	51-90718

Manufacturer	Model designation	Radio equipment approval number
Continental Automotive Technologies	NTG7Q HIGH LF2 (head unit)	51-90717
Continental Automotive Technologies	NTG7Q PREMIUM LF2 (head unit)	51-90719
Harman Becker	NTG7 HIGH-IL (Headunit)	51-89476
Harman Becker	NTG7 PREMIUMPLUS-IL (Headunit)	51-89475
HELLA	DM4 (locking system)	55-14271
HELLA	RS6 (locking system)	51-98663
Hirschmann	920287A (locking system)	51-62759
Hirschmann	920287B (locking system)	51-49357
Hirschmann	920702A (locking system)	56-03806
Huf Baolong	TSSRE4A (tyre pressure sensor)	63-63571
Huf Baolong	TSSSG4G6b (tyre pressure monitoring system control unit)	63-66757
HUF	HUF13145 (locking system)	55-14153
MARQUARDT	DC12A (locking system)	55-13847
MARQUARDT	DC12B (locking system)	55-12215
MARQUARDT	DC12K (locking system)	55-12214

Manufacturer	Model designation	Radio equipment approval number
MARQUARDT	MS2 (locking system)	51-85192
MARQUARDT	MS5 (locking system)	51-86840
MARQUARDT	MS6 (locking system)	56-03065
MARQUARDT	MS7 (locking system)	56-07888
MARQUARDT	3350.38 (locking system)	55-14331
MARQUARDT	MK1 (locking system)	51-94449
MARQUARDT	MK2 (locking system)	51-94450
MARQUARDT	MK3 (locking system)	56-03260
MARQUARDT	MU3 (locking system)	51-97974
MARQUARDT	MUB1 (locking system)	56-07889
Schrader	AG3PF4 (tyre pressure sensor)	51-78338
Schrader	AG5SP4 (tyre pressure sensor)	51-73152
Schrader	BG3FP4 (tyre pressure sensor)	51-77898
Schrader	DG6W2D4 (tyre pressure sensor)	51-64111
Schrader	GG4T (tyre pressure sensor)	55-09441
Schrader	MC34MA4 (tyre pressure monitoring system control unit)	51-29611
Schrader	MFR (tyre pressure monitoring system control unit)	55-06040

Manufacturer	Model designation	Radio equipment approval number
Schrader	MFR3 (tyre pressure monitoring system control unit)	51-79817
Valeo	ARTEMIS-SUB-01 (locking system)	56-10662
Veoneer	77V12BSM (radar sensor)	55-08176
Veoneer	77V12CRN (radar sensor)	55-08301
WITTE-Velbert	SDHTAG3NFC (locking system)	55-12216
Vitesco	HFA30 (radar sensor)	56-01011

JAMAICA

REGULATORY RADIO IDENTIFIERS

Manufacturer	Model designation
	This product has been Type Approved by Jamaica:
Continental Automotive	CMKG1 (locking system)
Continental Automotive	CMKG2 (locking system) SMA – CMKG2
Continental Automotive	CMKG3 (locking system) SMA – CMKG3
Continental Automotive	RKE213E1 (aerial amplifier)
Continental Automotive	RKE223E1GNS (aerial amplifier)
Continental Automotive	MARS Keyless (locking system)
Hirschmann	920287A (locking system)
Hirschmann	920287B (locking system)
Hirschmann	920702A (locking system)
HELLA	DM4 (locking system)
HUF	HUF13145 (locking system)
MARQUARDT	DC12A (locking system)
MARQUARDT	DC12B (locking system)
MARQUARDT	DC12K (locking system)
MARQUARDT	MS2 (locking system)
MARQUARDT	MS4 (locking system)
MARQUARDT	MS5 (locking system)
MARQUARDT	MS6 (locking system) SMA – MS6
MARQUARDT	MS7 (locking system) SMA – MS7
MARQUARDT	MK1 (locking system)
MARQUARDT	MK2 (locking system)
MARQUARDT	MK3 (locking system) SMA – MK3
MARQUARDT	MU3 (locking system) SMA – MU3

Manufacturer	Model designation
MARQUARDT	MUB1 (locking system) SMA – MUB1
MARQUARDT	3350.38 (locking system)
WITTE-Velbert	SDHTAG3NFC (locking system)
Valeo	ARTEMIS-SUB-01 (locking system) SMA – ARTEMIS-SUB-01
Vitesco	HFA30 (radar sensor)

JAPAN

REGULATORY RADIO IDENTIFIERS

Manufacturer	Model designation	Radio equipment approval number
Continental Automotive	CMKG2 (locking system)	TMWK2211004648KR
Continental Automotive Technologies	NTG7Q HIGH LF2 (head unit)	003-230113
Continental Automotive Technologies	NTG7Q PREMIUM LF2 (head unit)	003-230112
MARQUARDT	MS6 (locking system)	204-A00043
Sennheiser	M3IETW2R (Earbud)	201-190814 (R)
Sennheiser	M3IETW2L (Earbud)	201-190815 (L)
Sennheiser	BTT100 (Bluetooth Audio Transmitter)	020-180077
Vitesco	HFA30 (radar sensor)	209-J00495

Additional specific information

ARTEMIS and MB - 4G eCall Box:

This device has been approved in accordance with Japanese Radio Law and with Japanese Telecommunications Business Law.

This device may not undergo any modifications, otherwise the designation number assigned to this product will be rendered null and void.

JORDAN

REGULATORY RADIO IDENTIFIERS

Manufacturer	Model designation	Radio equipment approval number
Continental Antenna	RKE213E1 (aerial amplifier)	TRC/34/7421/2023
Continental Antenna	RKE223E1GNS (aerial amplifier)	TRC/36/7494/2020
Continental Automotive	CMKG1 (Schließsystem)	T/4/11/11/6775
Continental Automotive	CMKG2 (Schließsystem)	TRC/19/11374/2023

Manufacturer	Model designation	Radio equipment approval number
Continental Automotive	CMKG3 (Schließsystem)	TRC/34/16025/2024
Continental Automotive	MARS Keyless (Schließsystem)	TRC/34/11448/2023
Gentex	MUAHL5 (convenience system)	T/4/11/11/8462
HELLA	DM4 (locking system)	T/4/11/11/5472
Hirschmann	920287A (locking system)	T/4/11/11/10883
Hirschmann	920287B (locking system)	T/4/11/11/10332
Hirschmann	920702A (locking system)	TRC/34/9770/2022
HUF	HUF13145 (locking system)	T/4/11/11/2242
HUF	HUF14632 (locking system)	T/4/11/11/4355
MARQUARDT	DC12A (locking system)	T/4/11/11/933
MARQUARDT	DC12B (locking system)	T/4/11/11/9429
MARQUARDT	DC12K (locking system)	T/4/11/11/9430
MARQUARDT	MS2 (locking system)	T/4/11/11/6493
MARQUARDT	MS4 (locking system)	T/4/11/11/6493
MARQUARDT	MS5 (locking system)	T/4/11/11/3509
MARQUARDT	MS7 (locking system)	TRC/34/14099/2024
MARQUARDT	3350.38 (locking system)	TRC/34/12899/2023
MARQUARDT	MK1 (locking system)	TRC/34/7629/2020
MARQUARDT	MK2 (locking system)	TRC/34/7630/2020
MARQUARDT	MK3 (locking system)	TRC/34/13651/2024
MARQUARDT	MU3 (locking system)	TRC/34/12770/2023
MARQUARDT	MUB1 (locking system)	TRC/34/14013/2024
Valeo	ARTEMIS-SUB-01 (locking system)	TRC/34/13621/2023
WITTE-Velbert	SDHTAG3NFC (locking system)	T/4/11/11/2635

CANADA

REGULATORY RADIO IDENTIFIERS

Manufacturer	Model designation	Radio equipment approval number
Continental Automotive	CMKG2 (locking system)	IC: 7812D-CMKG2
Continental Automotive Technologies	NTG7Q MID LF2 (head unit)	IC: NTG7QMIDLF2
Continental Automotive Technologies	NTG7Q HIGH LF2 (head unit)	IC: NTG7QHIGLF2
Continental Automotive Technologies	NTG7Q PREMIUM LF2 (head unit)	IC: NTG7QPREF2
MARQUARDT	MS6 (locking system)	IC: 2701A-MS6
Sennheiser	M3IETW2R (Earbud)	IC:2099A-M3IETW2R

Manufacturer	Model designation	Radio equipment approval number
Sennheiser	M3IETW2L (Earbud)	IC:2099A-M3IETW2L
Sennheiser	BTT100 (Bluetooth Audio Transmitter)	IC:2099A-BTT100
Sennheiser	M3IETW2 C (Charging Case)	CAN ICS-3(B)/NMB-3(B)
Vitesco	HFA30 (Radarsensor)	28616-HFA30

KUWAIT

REGULATORY RADIO IDENTIFIERS

Manufacturer	Model designation	Radio equipment approval number
HUF	HUF13145 (locking system)	Ref. 5873
Continental Automotive	CMKG2 (locking system)	Ref. 6716
Sennheiser	M3IETW2 (Momentum True Wireless 2)	Ref. 4870
Sennheiser	BTT100 (Bluetooth Audio Transmitter)	Ref. 4871
Vitesco	HFA30 (radar sensor)	Ref. 7272

MALAYSIA

REGULATORY RADIO IDENTIFIERS

Manufacturer	Model designation	Radio equipment approval number
Continental ADC	ARS6-A (radar sensor)	HIDF15000153
Continental ADC	ARS4-C (radar sensor)	HIDF15000153
Bosch	FR5CPCCF (radar sensor)	CIDF15000490
Bosch	LRR3 (radar sensor)	CIDF15000490
Bosch	MRR1Rear (radar sensor)	CIDF15000490
Bosch	MRRe14FCR (radar sensor)	CIDF15000490
Bosch	MRRevo14F (radar sensor)	CIDF15000490
Bosch	F5CP12 (radar sensor)	RGLN/30A/0522/S(22-2490)
Continental Antenna	RKE213E1 (aerial amplifier)	HIDF15000153
Continental Antenna	RKE223E1GNS (aerial amplifier)	HIDF16000136
Continental Antenna	2032V00ME1 (aerial amplifier)	HIDF19000133
Continental Automotive	CMKG1 (locking system)	HIDF15000153
Continental Automotive	CMKG2 (locking system)	HIDF15000153
Continental Automotive	CMKG3 (locking system)	HIDF15000153
Continental Automotive	MARS Keyless (locking system)	CIDF15000578

Manufacturer	Model designation	Radio equipment approval number
Continental Automotive	UWBTRX1 (locking system)	HIDF15000153
Continental Automotive	D-WMI2020A (control unit)	RGEZ/12A/1019/S(19-4128)
Continental Automotive Technologies	NTG7Q MID LF2 (head unit)	RCCT/92G/0423/S(23-0350)
Continental Automotive Technologies	NTG7Q HIGH LF2 (head unit)	CCT/91G/0323/S(23-1291)
Continental Automotive Technologies	NTG7Q PREMIUM LF2 (head unit)	RGQB/05A/0323/S(23-1293)
HELLA	DM4 (locking system)	RDDK/41A/0717/S(17-2269)
HELLA	RS6 (locking system)	CIDF15000578
Hirschmann	920287A (locking system)	RAUU/63A/0311/S(11-0432)
Hirschmann	920287B (locking system)	RAUU/22C/0615/S(15-1864)
Hirschmann	920702A (locking system)	HIDF15000153
Huf Baolong	TSSRE4A (tyre pressure sensor)	HIDF15000153
HUF	HUF13482 (locking system)	HIDF15000153
HUF	HUF13145 (locking system)	RFBY/09A/0422/S(22-1843)
HUF	HUF14632 (locking system)	RAYN/25A/0715/S(15-2385)
HUF	HUF4761 (locking system)	RAAU/16B/1112/S(12-2053)
MARQUARDT	DC12A (locking system)	RDDK/33A/0317/S(17-0669)

Manufacturer	Model designation	Radio equipment approval number
MARQUARDT	DC12B (locking system)	RAUU/62A/0311/S(11-0263)
MARQUARDT	DC12K (locking system)	RAUU/62A/0311/S(11-0264)
MARQUARDT	MS2 (locking system)	RDDK/31A/0217/S(17-0405)
MARQUARDT	MS4 (locking system)	RDDK/25B/1019/S(19-0943)
MARQUARDT	MS5 (locking system)	RGLO/02A/0720/S(20-2580)
MARQUARDT	MS6 (locking system)	CIDF19000029
MARQUARDT	MS7 (locking system)	CIDF19000029
MARQUARDT	MK1 (locking system)	CIDF19000029
MARQUARDT	MK2 (locking system)	CIDF19000029
MARQUARDT	MK3 (locking system)	CIDF19000029
MARQUARDT	MU3 (locking system)	CIDF19000029
MARQUARDT	MUB1 (locking system)	CIDF19000029
MARQUARDT	3350.38 (locking system)	CIDF19000029
Meta System	ITS/TPS (interior protection)	RAVG/18Q/0212/S(11-2068)
Meta System	MUW II (interior protection)	RAVG/17Q/0212/S(11-2067)
Schrader	AG5SP4 (tyre pressure sensor)	RCDD/03A/0615/S(19-2094)
Schrader	AG3PF4 (tyre pressure sensor)	RBEF/28A/0419/S/(19-1542)

Manufacturer	Model designation	Radio equipment approval number
Schrader	BG3FP4 (tyre pressure sensor)	RBEF/51A/0121/S/(20-5642)
Schrader	GG4T (tyre pressure sensor)	RBEF/09A/1017/S(17-3183)
Schrader	DG6W2D4 (tyre pressure sensor)	RBEF/09A/1017/S(17-3183)
Schrader	MFR (tyre pressure monitoring system control unit)	RAQP/62A/0419/S(19-1694)
Schrader	MFR3 (tyre pressure monitoring system control unit)	RAQP/62A/0419/S(19-1694)
Veoneer	77GHz MMRV1 (radar sensor)	HIDF15000153
Veoneer	77V12BSM (radar sensor)	HIDF15000153
Veoneer	77V12CRN (radar sensor)	HIDF15000153
Veoneer	77V125CRN (radar sensor)	HIDF15000153
WITTE-Velbert	SDHTAG3NFC (locking system)	RDDK/43B/0420/S(20-1749)
Vitesco	HFA30 (radar sensor)	RGZK/03A/1223/S(23-5530)

MOROCCO

REGULATORY RADIO IDENTIFIERS

Manufacturer	Model designation	Radio equipment approval number
		AGREE PAR L'ANRT MAROC
Continental ADC	ARS4-A (radar sensor)	MR 9490 ANTR 2024-04-23
Continental ADC	ARS4-B (radar sensor)	MR 9778 ANTR 2024-08-08
Continental ADC	ARS6-A (radar sensor)	MR 00033936 ANRT 2022-08-03
Continental ADC	ARS4-C (radar sensor)	MR 20231 ANRT 2019-06-27
Continental ADC	ARS441DP10 (radar sensor)	MR 20231 ANRT 2019-06-27
Bosch	FR5CPCCF (radar sensor)	MR 20575 ANRT 2019-07-29
Bosch	LRR3 (radar sensor)	MR 5371 ANRT 2010 2019-12-05
Bosch	MRR1Rear (radar sensor)	MR 9186 ANTR 2014-04-22
Bosch	MRRe14FCR (radar sensor)	MR 13900 ANTR 2017-05-04
Bosch	F5CP12 (radar sensor)	MR00032137ANRT2022
Continental Antenna	RKE213E1 (aerial amplifier)	MR 10631 ANTR 2015-07-16
Continental Antenna	RKE223E1GNS (aerial amplifier)	MR 21174 ANTR 2019-10-14
Continental Antenna	2032V00ME1 (aerial amplifier)	MR00005051ANTR2024
Continental Automotive	CMKG1 (locking system)	MR 21701 ANTR 2019-12-05
Continental Automotive	CMKG2 (locking system)	MR 36542 ANRT 2023-02-01
Continental Automotive	CMKG3 (locking system)	MR 00004622 ANRT 2024-10-23
Continental Automotive	MARS Keyless (locking system)	MR 13681 ANTR 2017-04-04
Continental Automotive	UWBTRX1 (locking system)	MR 623 ANTR 2024-02-14

Manufacturer	Model designation	Radio equipment approval number
HELLA	DM4 (locking system)	MR 14426 ANTR 2017-07-28
Hirschmann	920287A (locking system)	MR 6700 ANTR 2011-11-16
Hirschmann	920287B (locking system)	MR 7260 ANTR 2012-06-13
Hirschmann	920702A (locking system)	MR 32214 ANTR 2022-03-08
Huf Baolong	TSSRE4A (tyre pressure monitoring system control unit)	MR 14320 ANTR 2017-07-07
Huf Baolong	TSSSG4G6b (tyre pressure monitoring system control unit)	MR 19561 ANTR 2019-04-26
HUF	HUF13482 (locking system)	MR 3374 ANRT 2024-07-31
HUF	HUF13145 (locking system)	MR 32395 ANRT 2022-03-24
HUF	HUF14632 (locking system)	MR 10506 ANTR 2015-06-22
HUF	HUF4761 (locking system)	MR 7829 ANTR 2013-02-14
MARQUARDT	DC12A (locking system)	MR 13429 ANTR 2017-03-03
MARQUARDT	DC12B (locking system)	MR 6698 ANTR 2021-11-04
MARQUARDT	DC12K (locking system)	MR 6699 ANTR 2021-11-04
MARQUARDT	MS2 (locking system)	MR 13300 ANTR 2017-02-15
MARQUARDT	MS4 (locking system)	MR 19199 ANTR 2019-03-25
MARQUARDT	MS5 (locking system)	MR 23805 ANRT 2020-04-22
MARQUARDT	MS6 (locking system)	MR 00000358 ANRT 2024-01-30

Manufacturer	Model designation	Radio equipment approval number
MARQUARDT	MS7 (locking system)	MR 00001197 ANTR 2024-03-25
MARQUARDT	MK1 (locking system)	MR 10645 ANTR 2015-07-21
MARQUARDT	MK2 (locking system)	MR 10987 ANTR 2015-10-22
MARQUARDT	MK3 (locking system)	MR 00041098 ANTR 2023-12-25
MARQUARDT	MU3 (locking system)	MR 00039580 ANTR 2023-08-08
MARQUARDT	3350.38 (locking system)	MR 18817 ANTR 2019-02-12
MARQUARDT	MUB1 (locking system)	MR 00000864 ANTR 2024-02-29
Schrader	AG5SP4 (tyre pressure monitoring system control unit)	MR 10216 ANRT 2015
Schrader	AG3PF4 (tyre pressure sensor)	MR 19241 ANRT 2019
Schrader	BG3FP4 (tyre pressure sensor)	MR00026829ANRT2020
Schrader	MFR (tyre pressure monitoring system control unit)	MR 10927 ANRT 2015
Schrader	MFR3 (tyre pressure monitoring system control unit)	MR 19527 ANRT 2019
Schrader	GG4T (tyre pressure sensor)	MR 14777 ANRT 2017-09-20
Schrader	DG6W2D4 (tyre pressure sensor)	MR 16355 ANRT 2018-04-19

Manufacturer	Model designation	Radio equipment approval number
Schrader	MC34MA4 (tyre pressure monitoring system control unit)	MR 6706 ANRT 2011-11-17
Veoneer	77GHz MMRV1 (radar sensor)	MR 10436 ANRT 2015-05-25
Veoneer	77V12BSM (radar sensor)	MR 20097 ANRT 2019-06-14
Veoneer	77V12CRN (radar sensor)	MR 20149 ANRT 2019-06-19
Veoneer	77V125CRN (radar sensor)	MR 27966 ANRT 2021-03-29
Valeo	ARTEMIS-SUB-01 (locking system)	MR 00000073 ANRT 2024-01-05
WITTE-Velbert	SDHTAG3NFC (locking system)	MR 23310 ANRT 2020-03-10

MEXICO

REGULATORY RADIO IDENTIFIERS

Manufacturer	Model designation	Radio equipment approval number
Continental ADC	ARS4-A (radar sensor)	IFETEL: RCPCOAR14-1191
Continental ADC	ARS4-B (radar sensor)	IFETEL: RLVCOAR15-0008
Continental ADC	ARS6-A (radar sensor)	IFETEL: SYCOAR22-17289
Continental ADC	ARS4-C (radar sensor)	IFETEL: RLVCOR19-1062
Continental ADC	ARS441DP10 (radar sensor)	IFETEL: RLVCOR19-1062
Bosch	LRR3 (radar sensor)	IFETEL: RCPBOLR09-0828
Bosch	MRR1Rear (radar sensor)	IFETEL: RCPBOMR14-0922
Bosch	MRRe14FCR (radar sensor)	IFETEL: RCPBOMR17-0598
Continental Antenna	RKE213E1 (aerial amplifier)	IFETEL: RLVKARK15-1741
Continental Antenna	RKE223E1 (aerial amplifier)	IFETEL: RLVCORK19-2174
Continental Automotive	CMKG1 (locking system)	IFETEL: RCPCOCM19-2315
Continental Automotive	CMKG2 (locking system)	IFETEL: COCOCM22-31003
Continental Automotive	CMKG3 (locking system)	IFETEL: COCOCM24-25387
Continental Automotive	MARS Keyless (locking system)	IFETEL: RLVDAMA18-1827
Continental Automotive	UWBTRX1 (locking system)	IFETEL: MECOCM22-17609
Continental Automotive Hungary	HNA15_01 (Ramses 1.5) (communication module)	IFETEL: MECOHN24 - 29722
Continental Automotive Hungary	HNA15_02 (Ramses 1.5) (communication module)	IFETEL: MECOHN24 - 29725
Continental Automotive Technologies	NTG7Q MID LF2 (head unit)	IFETEL: MEMENT23 - 12200
Continental Automotive Technologies	NTG7Q HIGH LF2 (head unit)	IFETEL: MEMENT23 - 11923

Manufacturer	Model designation	Radio equipment approval number
Continental Automotive Technologies	NTG7Q PREMIUM LF2 (head unit)	IFETEL: MEMENT23 - 12204
Gentex	MUAHL5 (convenience system)	IFETEL: RCPGEMU15-0448
HELLA	DM4 (locking system)	IFETEL: RLVHEDM17-10
Hirschmann	920287A (locking system)	IFETEL: RLVHI9211-0472
Hirschmann	920287B (locking system)	IFETEL: RLVHI9212-0608
Hirschmann	920702A (locking system)	IFETEL: RLVHI9222-2674
Huf Baolong	TSSRE4A (tyre pressure sensor)	IFETEL: RLVHUTS17-0806
HUF	HUF13145 (locking system)	IFETEL: RCPHUHU22-2505
HUF	HUF14632 (locking system)	IFETEL: RLVHUHU15-1204
HUF	HUF4761 (locking system)	IFETEL: RLVHUHU12-1587
MARQUARDT	DC12A (locking system)	IFETEL: RLVMEDC17-0348
MARQUARDT	DC12B (locking system)	IFETEL: RLVMContinental ADC11-0446
MARQUARDT	DC12K (interior protection)	IFETEL: RLVMContinental ADC11-0446
MARQUARDT	MS2 (locking system)	IFETEL: RLVMAMS17-0222
MARQUARDT	MS4 (locking system)	IFETEL: RLVMAMS19-0449
MARQUARDT	MS5 (locking system)	IFETEL: RLVMEMS20-0957
MARQUARDT	MS6 (locking system)	IFETEL: MEMAMS24-03199
MARQUARDT	MS7 (locking system)	IFT MEMAMS24-22544
MARQUARDT	MK1 (locking system)	IFETEL: RLVMAMK15-1042
MARQUARDT	MK2 (locking system)	IFETEL: RLVMAMK15-1043
MARQUARDT	MK3 (locking system)	IFT MEMAMK24-22883
MARQUARDT	MU3 (locking system)	IFT MEMAMU25-22726
MARQUARDT	3350.38 (locking system)	IFETEL: RCPMA3319-0530
Schrader	AG5SP4 (tyre pressure sensor)	IFETEL: RCPSCAG15-0627
Schrader	AG3PF4 (tyre pressure sensor)	IFETEL: RLVSCAG19-0705
Schrader	BG3FP4 (tyre pressure sensor)	IFETEL: RLVSCBG21-0750
Schrader	MFR (tyre pressure monitoring system control unit)	IFETEL: RLVSCMF15-0959
Schrader	MFR3 (tyre pressure monitoring system control unit)	IFETEL: RLVSCMF19-0777
Schrader	GG4T (tyre pressure sensor)	IFETEL: RLVSCGG17-1665
Schrader	DG6W2D4 (tyre pressure sensor)	IFETEL: RLVSCDG18-04

Manufacturer	Model designation	Radio equipment approval number
Schrader	MC34MA4 (tyre pressure monitoring system control unit)	IFETEL: RCPSCMR14-062
Sennheiser	M3IETW2R (Earbud)	IFETEL: RCPSEM320-0435-A1
Sennheiser	M3IETW2L (Earbud)	IFETEL: RCPSEM320-0435
Sennheiser	BTT100 (Bluetooth Audio Transmitter)	IFETEL: RCPSEBT18-1407
WITTE-Velbert	SDHTAG3NFC (locking system)	IFETEL: RCPWISD20-0943
Vitesco	HFA30 (radar sensor)	IFETEL: ROVIHF24-02919

MONGOLIA

REGULATORY RADIO IDENTIFIERS

Manufacturer	Model designation	Radio equipment approval number
Continental Automotive	CMKG1 (locking system)	A19000633
Continental Automotive	CMKG2 (locking system)	A23000900
Continental Automotive	CMKG3 (locking system)	A24001395
Continental Automotive	MARS Keyless (locking system)	A18000328
HELLA	DM4 (locking system)	A18000329
Hirschmann	920702A (locking system)	A22000649
HUF	HUF13145 (locking system)	A22000674
MARQUARDT	DC12A (locking system)	A19000400
MARQUARDT	DC12B (locking system)	A19000371
MARQUARDT	DC12K (locking system)	A19000372
MARQUARDT	MS2 (locking system)	A18000289
MARQUARDT	MS4 (locking system)	A19000516
MARQUARDT	MS5 (locking system)	A20000085
MARQUARDT	MS6 (locking system)	A24001213
MARQUARDT	MS7 (locking system)	A24001253
MARQUARDT	MK1 (locking system)	A19000374
MARQUARDT	MK2 (locking system)	A19000374
MARQUARDT	MK3 (locking system)	A24001205
MARQUARDT	MU3 (locking system)	A23001102
MARQUARDT	MUB1 (locking system)	A24001254
MARQUARDT	3350.38 (locking system)	A19000401

Manufacturer	Model designation	Radio equipment approval number
WITTE-Velbert	SDHTAG3NFC (locking system)	A20000067
Valeo	ARTEMIS-SUB-01 (locking system)	A24001183
Vitesco	HFA30 (radar sensor)	A23001126

NIGER

REGULATORY RADIO IDENTIFIERS

Manufacturer	Model designation	Radio equipment approval number
Continental Antenna	RKE213E1 (aerial amplifier)	029/ARCEP/DG/19
Continental Automotive	MARS Keyless (locking system)	083/ARCEP/DG/19
HELLA	DM4 (locking system)	082/ARCEP/DG/19
Hirschmann	920287A (locking system)	097/ARCEP/DG/19
Hirschmann	920287B (locking system)	098/ARCEP/DG/19
HUF	HUF4761 (locking system)	053/ARCEP/DG/19
MARQUARDT	DC12A (locking system)	010/ARCEP/DG/19
MARQUARDT	DC12B (locking system)	008/ARCEP/DG/19
MARQUARDT	DC12K (locking system)	009/ARCEP/DG/19
MARQUARDT	MS2 (locking system)	014/ARCEP/DG/19
MARQUARDT	MS4 (locking system)	HOMO-0096/ARCEP/DG/2019
MARQUARDT	MK1 (locking system)	034/ARCEP/DG/19
MARQUARDT	MK2 (locking system)	035/ARCEP/DG/19
MARQUARDT	3350.38 (locking system)	015/ARCEP/DG/19
MARQUARDT	MU1 (locking system)	HOMO-0095/ARCEP/DG/2019

NIGERIA

REGULATORY RADIO IDENTIFIERS

Manufacturer	Model designation
Continental ADC	ARS4-A (radar sensor)
Continental ADC	ARS4-B (radar sensor)
Continental ADC	ARS6-A (radar sensor)
Continental ADC	ARS4-C (radar sensor)
Bosch	FR5CPCCF (radar sensor)
Bosch	MRR1Rear (radar sensor)
Bosch	MRRe14FCR (radar sensor)
Bosch	F5CP12 (radar sensor)
Continental Antenna	RKE213E1 (aerial amplifier)
Continental Antenna	RKE223E1GNS (aerial amplifier)
Continental Automotive	CMKG1 (locking system)

Manufacturer	Model designation
Continental Automotive	CMKG2 (locking system)
Continental Automotive	CMKG3 (locking system)
Continental Automotive	MARS Keyless (locking system)
HELLA	DM4 (locking system)
Hirschmann	920287A (locking system)
Hirschmann	920287B (locking system)
Hirschmann	920702A (locking system)
HUF	HUF13145 (locking system)
HUF	HUF14632 (locking system)
HUF	HUF4761 (locking system)
MARQUARDT	DC12A (locking system)
MARQUARDT	DC12B (locking system)
MARQUARDT	DC12K (locking system)
MARQUARDT	MS2 (locking system)
MARQUARDT	MS4 (locking system)
MARQUARDT	MS5 (locking system)
MARQUARDT	MS6 (locking system)
MARQUARDT	MS7 (locking system)
MARQUARDT	MK1 (locking system)

Manufacturer	Model designation
MARQUARDT	MK2 (locking system)
MARQUARDT	MK3 (locking system)
MARQUARDT	MU3 (locking system)
MARQUARDT	MUB1 (locking system)
MARQUARDT	3350.38 (locking system)
Schrader	AG3PF4 (tyre pressure sensor)
Schrader	BG3FP4 (tyre pressure sensor)
Schrader	MFR3 (tyre pressure monitoring system control unit)
Valeo	ARTEMIS-SUB-01 (locking system)
Veoneer	77V12BSM (radar sensor)
Veoneer	77V12CRN (radar sensor)
Veoneer	77V125CRN (radar sensor)
WITTE-Velbert	SDHTAG3NFC (locking system)
Vitesco	HFA30 (radar sensor)

OMAN

REGULATORY RADIO IDENTIFIERS

Manufacturer	Model designation	Radio equipment approval number
Continental ADC	ARS4-A (radar sensor)	TRA/TA-R/2016/14 D080134
Continental ADC	ARS6-A (radar sensor)	TRA/TA-R/14181/22 D172338
Continental ADC	ARS4-C (radar sensor)	TRA/TA-R/7769/19 D172338
Bosch	FR5CPCCF (radar sensor)	TRA/TA-R/7983/19 D172338
Bosch	LRR3 (radar sensor)	TRA/TA-R/1049/09
Bosch	MRR1Rear (radar sensor)	TRA/TA-R/1849/14
Bosch	MRRe14FCR (radar sensor)	TRA/TA-R/4353/17
Bosch	F5CP12 (radar sensor)	TRA/TA-R/13339/22
Continental Antenna	RKE213E1 (aerial amplifier)	TRA/TA-R/2715/15 D090258
Continental Antenna	RKE223E1GNS (aerial amplifier)	TRA/TA-R/8337/19 D172338
Continental Antenna	2032V00ME1 (aerial amplifier)	TRA/TA-R/20944/2025 D1074804
Continental Automotive	CMKG1 (locking system)	TRA/TA-R/8642/19 D172338
Continental Automotive	CMKG2 (locking system)	TRA/TA-R/15164/23 D100428
Continental Automotive	CMKG3 (locking system)	TRA/TA-R/15164/23 D1054074
Continental Automotive	MARS Keyless (locking system)	TRA/TA-R/20607/2024 D172338
HELLA	DM4 (locking system)	TRA/TA-R/4548/17 D080134
Hirschmann	920287A (locking system)	TRA/TA-R/0210/11 D080353
Hirschmann	920287B (locking system)	TRA/TA-R/0655/12 D080353
Hirschmann	920702A (locking system)	TRA/TA-R/13300/22 D172338
Huf Baolong	TSSRE4A (tyre pressure sensor)	TRA/TA-R/4516/17 D100428
Huf Baolong	TSSSG4G6b (tyre pressure sensor)	TRA/TA-R/7506/19
HUF	HUF13482 (locking system)	TRA/TA-R/18930/24
HUF	HUF13145 (locking system)	TRA/TA-R/13465/22
HUF	HUF14632 (locking system)	TRA/TA-R/2665/15
HUF	HUF4761 (locking system)	TRA/TA-R/0920/12

Manufacturer	Model designation	Radio equipment approval number
MARQUARDT	DC12A (locking system)	TRA/TA-RD/4056/17 D100428
MARQUARDT	DC12B (locking system)	TRA/TA-R/0227/11 D080353
MARQUARDT	DC12K (locking system)	TRA/TA-R/0228/11 D080353
MARQUARDT	MS2 (locking system)	TRA/TA-R/4136/17 D080134
MARQUARDT	MS4 (locking system)	TRA/TA-R/7316/19 D172249
MARQUARDT	MS5 (locking system)	TRA/TA-R/17887/24 D172338
MARQUARDT	MS6 (locking system)	TRA/TA-R/17509/24 D172338
MARQUARDT	MK1 (locking system)	TRA/TA-R/2848/15 D080353
MARQUARDT	MK2 (locking system)	TRA/TA-R/2900/15 D080353
MARQUARDT	MK3 (locking system)	TRA/TA-R/17223/23 D080354
MARQUARDT	MU3 (locking system)	TRA/TA-R/16494/23 D172338
MARQUARDT	3350.38 (locking system)	TRA/TA-R/7051/19 D172249

Manufacturer	Model designation	Radio equipment approval number
MARQUARDT	MUB1 (locking system)	TRA/TA-R/17721/24 D172338
Schrader	AG5SP4 (tyre pressure sensor)	TRA R/2380/15 D080134
Schrader	AG3PF4 (tyre pressure sensor)	TRA R/7287/19 D172338
Schrader	BG3FP4 (tyre pressure sensor)	TRA/TA-R/10694/20 D172338
Schrader	MFR (tyre pressure monitoring system control unit)	TRA/TA-R/7464/19 D090258
Schrader	MFR3 (tyre pressure monitoring system control unit)	TRA/TA-R/7467/19 D090258
Schrader	GG4T (tyre pressure sensor)	TRA/TA-R/4686/17 D080134
Schrader	DG6W2D4 (tyre pressure sensor)	TRA/TA-R/5511/18 D172249
Sennheiser	M3IETW2R (Earbud)	TRA/TA-R/10988/21
Sennheiser	BTT100 (Bluetooth Audio Transmitter)	TRA/TA-R/10976/21
Veoneer	77GHz MMRV1 (radar sensor)	TRA/TA-R/2706/15
Veoneer	77V12BSM (radar sensor)	TRA/TA-R/7706/19 D172338

Manufacturer	Model designation	Radio equipment approval number
Veoneer	77V12CRN (radar sensor)	TRA/TA-R/7707/19 D172338
Veoneer	77V125CRN (radar sensor)	TRA/TA-R/11335/21 D172338
WITTE-Velbert	SDHTAG3NFC (locking system)	TRA/TA-R/9150/20
Valeo	ARTEMIS-SUB-01 (locking system)	TRA/TA-R/17293/23 D172338
Vitesco	HFA30 (radar sensor)	TRA/TA-R/17028/23 172338D

PAKISTAN

REGULATORY RADIO IDENTIFIERS

Manufacturer	Model designation	Radio equipment approval number
Continental ADC	ARS4-A (radar sensor)	TAC NO: 9.9014/2019
Continental ADC	ARS4-C (radar sensor)	TAC NO: 9.9389/2019
Continental ADC	ARS6-A (radar sensor)	TAC NO: 9.666/2024
Bosch	FR5CPCCF (radar sensor)	TAC NO: 9.198/2020
Bosch	F5CP12 (radar sensor)	TAC NO: 9.243/2023
Continental Antenna	RKE213E1 (aerial amplifier)	TAC NO: 9.142/2016
Continental Antenna	RKE223E1GNS (aerial amplifier)	TAC NO: 9.100169/2019
Continental Automotive	CMKG1 (locking system)	TAC NO:9.100175/2019
Continental Automotive	CMKG2 (locking system)	TAC NO: 9.153/2023
Continental Automotive	CMKG3 (locking system)	TAC NO: 9.1176/2024
Continental Automotive	MARS Keyless (locking system)	TAC NO: 9.213/2017
Continental Automotive	D-WMI2020A (control unit)	TAC NO: 9.9836/2019
HELLA	DM4 (locking system)	TAC NO: 9.409/2017
Hirschmann	920287A (locking system)	TAC NO: 9.845/2013
Hirschmann	920287B (locking system)	TAC NO: 9.846/2013
Hirschmann	920702A (locking system)	TAC NO. 9.412/2022
HUF Baolong	TSSRE4A (tyre pressure sensor)	TAC NO: 9.620/2017
HUF Baolong	TSSSRG4G6B (tyre pressure monitoring system control unit)	TAC NO: 9.9345/2019
HUF	HUF14632 (locking system)	TAC NO: 9.598/2015
HUF	HUF4761 (locking system)	TAC NO: 9.790/2013
MARQUARDT	DC12A (locking system)	TAC NO: 9.131/2017

Manufacturer	Model designation	Radio equipment approval number
MARQUARDT	DC12B (locking system)	TAC NO: 9.829/2013
MARQUARDT	DC12K (locking system)	TAC NO: 9.830/2013
MARQUARDT	MS2 (locking system)	TAC NO: 9.133/2017
MARQUARDT	MS4 (locking system)	TAC NO: 9.100171/2019
MARQUARDT	MS5 (locking system)	TAC.NO: 9.322/2020
MARQUARDT	MS6 (locking system)	TAC.NO: 9.94/2024
MARQUARDT	MS7 (locking system)	TAC.NO: 9.322/2024
MARQUARDT	MK1 (locking system)	TAC NO: 9.486/2015
MARQUARDT	MK2 (locking system)	TAC NO: 9.497/2015
MARQUARDT	MK3 (locking system)	TAC NO: 9.1175/2023
MARQUARDT	MU3 (locking system)	TAC NO: 9.1168/2023
MARQUARDT	MUB1 (locking system)	TAC NO: 9.269/2024
Schrader	AG3PF4 (tyre pressure sensor)	TAC NO:9.039/2016
Schrader	AG5SP4 (tyre pressure sensor)	TAC NO:9.9167/2019
Schrader	BG3FP4 (tyre pressure sensor)	TAC NO:9.68/2021
Schrader	GG4T (tyre pressure sensor)	TAC NO:9.538/2017
Schrader	DG6W2D4 (tyre pressure sensor)	TAC NO: 9.789/2018

Manufacturer	Model designation	Radio equipment approval number
Valeo	ARTEMIS-SUB-01 (locking system)	TAC NO: 9.746/2024
Veoneer	77GHz MMRV1 (radar sensor)	TAC NO: 9.9284/2019
Veoneer	77V12BSM (radar sensor)	TAC NO: 9.9391/2019
Veoneer	77V12CRN (radar sensor)	TAC NO: 9.9391/2019
Veoneer	77V125CRN (radar sensor)	TAC NO: 9.477/2021
WITTE-Velbert	SDHTAG3NFC (locking system)	TAC NO: 9.527/2020
Vitesco	HFA30 (radar sensor)	TAC NO: 9.1058/2023

PARAGUAY

REGULATORY RADIO IDENTIFIERS

Manufacturer	Model designation	Radio equipment approval number
Continental ADC	ARS4-A (radar sensor)	2024-04-I-0352
Continental ADC	ARS4-B (radar sensor)	2024-08-I-0721
Continental ADC	ARS6-A (radar sensor)	2022-08-I-0513

Manufacturer	Model designation	Radio equipment approval number
Continental ADC	ARS4-C (radar sensor)	2019-11-I-0602
Bosch	FR5CPCCF (radar sensor)	2019-09-I-0508
Bosch	MRRe14FCR (radar sensor)	2017-06-I-0000162
Bosch	MRR1Rear (radar sensor)	2019-05-I-000236
Bosch	F5CP12 (radar sensor)	2022-05-I-0329
Continental Antenna	RKE213E1 (aerial amplifier)	2021-02-I-00101 y 2016-02-I-0000038
Continental Antenna	RKE223E1GNS (aerial amplifier)	2019-12-I-0656
Continental Antenna	2032V00ME1 (aerial amplifier)	2024-12-I-0969
Continental Automotive	CMKG1 (locking system)	2020-02-I-0110
Continental Automotive	CMKG2 (locking system)	2023-03-I-0153

Manufacturer	Model designation	Radio equipment approval number
Continental Automotive	CMKG3 (locking system)	2024-12-I-0967
Continental Automotive	MARS Keyless (locking system)	2017-05-I-0000136
Continental Automotive	D-WMI2016A	2019-03-I-0170
Continental Automotive	D-WMI2017A	2019-03-I-000171
Continental Automotive	D-WMI2017B	2019-03-I-000172
Continental Automotive	D-WMI2020A	2019-11-I-0600
HELLA	DM4 (locking system)	2022-06-I-0388 y 2017-08-I-0000261
Hirschmann	920287A (locking system)	2016-5-I-000134 y 2011-06-I-0059
Hirschmann	920287B (locking system)	2017-04-I-0000119 y 2012-05-I-0096

Manufacturer	Model designation	Radio equipment approval number
Hirschmann	920702A (locking system)	2022-03-I-0149
Huf Baolong	TSSRE4A (tyre pressure sensor)	2022-08-I-0528
HUF	HUF13482 (locking system)	2024-08-I-0727
HUF	HUF13145 (locking system)	2022-04-I-0235
HUF	HUF14632 (locking system)	2020-06-I-0284 y 2015-08-I-0000226
HUF	HUF4761 (locking system)	2017-12-I-0000409 y 2012-10-I-0178
MARQUARDT	DC12A (locking system)	2020-12-I-0898 y 2015-06-I-0000181
MARQUARDT	DC12B (locking system)	2021-05-I-0304; 2016-5-I-000144 y 2011-06-I-0067
MARQUARDT	DC12K (locking system)	2021-05-I-0305; 2016-5-I-000143 y 2011-06-I-0068

Manufacturer	Model designation	Radio equipment approval number
MARQUARDT	MS2 (locking system)	2017-04-I-0000101
MARQUARDT	MS4 (locking system)	2019-10-I-0581
MARQUARDT	MS5 (locking system)	2020-08-I-0604
MARQUARDT	MS6 (locking system)	2024-02-I-0164
MARQUARDT	MS7 (locking system)	2024-05-I-0400
MARQUARDT	MK1 (locking system)	2020-07-I-0390 y 2015-07-I-0000200
MARQUARDT	MK2 (locking system)	2020-07-I-0391 y 2015-07-I-0000201
MARQUARDT	MK3 (locking system)	2024-03-I-0256
MARQUARDT	MU3 (locking system)	2023-08-I-0590

Manufacturer	Model designation	Radio equipment approval number
MARQUARDT	MUB1 (locking system)	2024-05-I-0401
MARQUARDT	3350.38 (locking system)	2024-02-I-0190 y 2019-04-I-000216
Schrader	AG5SP4 (tyre pressure sensor)	2015-04-I-0000150
Schrader	AG3PF4 (tyre pressure sensor)	2019-05-1-000261
Schrader	BG3FP4 (tyre pressure sensor)	2021-02-I-0063
Schrader	GG4T (tyre pressure sensor)	2020-02-1-0044
Schrader	DG6W2D4 (tyre pressure sensor)	2019-11-1-0632
Veoneer	77GHz MMRV1 (radar sensor)	2020-07-I-0510
Veoneer	77V12BSM (radar sensor)	2019-07-I-0399
Veoneer	77V12CRN (radar sensor)	2019-07-I-0398
Veoneer	77V125CRN (radar sensor)	2021-04-I-0188
Vitesco	HFA30 (radar sensor)	2023-11-I-0808
Valeo	ARTEMIS-SUB-01 (locking system)	2024-01-I-0074
WITTE-Velbert	SDHTAG3NFC (locking system)	2020-06-I-0326

Additional specific information

Charging unit for the wireless charging of mobile communication devices (WMI):

D-WMI2020A:

This vehicle is equipped with the following radio frequency component approved by CONATEL – Paraguay: wireless interface for mobile devices, Continental brand, model D-WMI2020A, manufactured by Continental Automotive GmbH.

Radio equipment approval number: 2019-11-I-0600

Rear Seat Entertainment System:

DAIRSE:

Importer: Condor S.A.C.I Casa Central, J.B. Gorostiaga 315 y Guaraníes, Asunción, Paraguay, (595 21) 569 7000, sac@condor.com.py

PHILIPPINES

REGULATORY RADIO IDENTIFIERS

Manufacturer	Model designation	Radio equipment approval number
Continental ADC	ARS4-A (radar sensor)	ESD-1409466C
Continental ADC	ARS4-C (radar sensor)	ESD-1920226C
Bosch	FR5CPCCF (radar sensor)	ESD-1920531C
Bosch	MRR1Rear (radar sensor)	ESD-1408917C
Bosch	MRRe14FCR (radar sensor)	ESD-1716172C
Bosch	F5CP12 (radar sensor)	ESD-RCE-2229495
Continental Antenna	RKE213E1 (aerial amplifier)	ESD-1511856C
Continental Antenna	RKE223E1GNS (aerial amplifier)	ESD-1921015C
Continental Antenna	2032V00ME1 (aerial amplifier)	ESD-RCE-2440037
Continental Automotive	CMKG1 (locking system)	ESD-2021556C
Continental Automotive	CMKG2 (locking system)	ESD-RCE-2332806
Continental Automotive	CMKG3 (locking system)	ESD-RCE-2439937
Continental Automotive	MARS Keyless (locking system)	ESD-1714865C
HELLA	DM4 (locking system)	ESD-1715539C
Hirschmann	920287A (locking system)	ESD-1105246C
Hirschmann	920287B (locking system)	ESD-1206044C
Hirschmann	920702A (locking system)	ESD-RCE-2229632
Huf Baolong	TSSRE4A (tyre pressure sensor)	ESD-1715393C
HUF	HUF13145 (locking system)	ESD-RCE-2229722
HUF	HUF14632 (locking system)	ESD-1511236C
HUF	HUF4761 (locking system)	ESD-1206521C
MARQUARDT	DC12A (locking system)	ESD-1714489C
MARQUARDT	DC12B (locking system)	ESD-1105216C
MARQUARDT	DC12K (locking system)	ESD-1105215C
MARQUARDT	MS2 (locking system)	ESD-1715652C
MARQUARDT	MS4 (locking system)	ESD-1919133C
MARQUARDT	MS5 (locking system)	ESD-REC-20437299
MARQUARDT	MS7 (locking system)	ESD-2022426C
MARQUARDT	MK1 (locking system)	ESD-1510644C
MARQUARDT	MK2 (locking system)	ESD-1510645C
MARQUARDT	MK3 (locking system)	ESD-REC-2436842
MARQUARDT	MU3 (locking system)	ESD-REC-2436843

Manufacturer	Model designation	Radio equipment approval number
MARQUARDT	3350.38 (locking system)	ESD-1919198C
MARQUARDT	MUB1 (locking system)	ESD-REC-2436916
Schrader	AG5SP4 (tyre pressure sensor)	ESD-1715393C
Schrader	AG3PF4 (tyre pressure sensor)	ESD-1919585C
Schrader	BG3FP4 (tyre pressure sensor)	ESD-RCE-2124846
Schrader	GG4T (tyre pressure sensor)	ESD-1715977C
Schrader	DG6W2D4 (tyre pressure sensor)	ESD-1817081C
Veoneer	77GHz MMRV1 (radar sensor)	ESD-1510921C
Vitesco	HFA30 (radar sensor)	ESD-RCE-2335375
Valeo	ARTEMIS-SUB-01 (locking system)	ESD-RCE-2436285
WITTE-Velbert	SDHTAG3NFC (locking system)	ESD-2022599C

ZAMBIA

REGULATORY RADIO IDENTIFIERS

Manufacturer	Model designation	Radio equipment approval number
Continental Antenna	RKE223E1 (aerial amplifier)	ZMB/ZICTA/TA/2019/3/11
Continental Automotive	MARS Keyless (locking system)	ZMB/ZICTA/TA/2019/3/3
HELLA	DM4 (locking system)	ZMB/ZICTA/TA/2019/3/4
Hirschmann	920287A (locking system)	ZMB/ZICTA/TA/2019/7/12
Hirschmann	920287B (locking system)	ZMB/ZICTA/TA/2019/7/11
HUF	HUF4761 (locking system)	ZMB/ZICTA/TA/2018/12/18
MARQUARDT	DC12A (locking system)	ZMB/ZICTA/TA/2019/5/16
MARQUARDT	DC12B (locking system)	ZMB/ZICTA/TA/2019/5/17
MARQUARDT	DC12K (locking system)	ZMB/ZICTA/TA/2019/5/18
MARQUARDT	MS2 (locking system)	ZMB/ZICTA/TA/2018/9/30
MARQUARDT	MS4 (locking system)	ZMB/ZICTA/TA/2019/7/123
MARQUARDT	MK1 (locking system)	ZMB/ZICTA/TA/2019/3/20
MARQUARDT	MK2 (locking system)	ZMB/ZICTA/TA/2019/3/21
MARQUARDT	3350.38 (locking system)	ZMB/ZICTA/TA/2019/3/6

Manufacturer	Model designation	Radio equipment approval number
MARQUARDT	MU1 (locking system)	ZMB/ZICTA/TA/2019/7/124
Valeo	ARTEMIS-SUB-01 (locking system)	ZMB/ZICTA/TA/2024/1/08

SENEGAL

AGREE PAR ARTP SENEGAL

Numéro d'agrément : XXXXXX/AG/ER

REGULATORY RADIO IDENTIFIERS

Manufacturer	Model designation	Radio equipment approval number
Continental Automotive	CMKG2 (locking system)	072504/AG/ER
Continental Automotive	CMKG3 (locking system)	073016/AG/ER
Continental Automotive Technologies	NTG7Q MID LF2 (head unit)	072486/AG/ER
Continental Automotive Technologies	NTG7Q HIGH LF2 (head unit)	072487/AG/ER
Continental Automotive Technologies	NTG7Q PREMIUM LF2 (head unit)	072488/AG/ER
Continental Automotive Technologies	NTG7Q PREMIUMPLUS LF2 (head unit)	072689/AG/ER
HUF	HUF13482 (locking system)	072954/AG/ER
MARQUARDT	MK3 (locking system)	072784/AG/ER
MARQUARDT	MU3 (locking system)	072676/AG/ER
MARQUARDT	MS7 (locking system)	072845/AG/ER
MARQUARDT	MUB1 (locking system)	072819/AG/ER
Valeo	ARTEMIS-SUB-01 (locking system)	072776/AG/ER

SERBIA

REGULATORY RADIO IDENTIFIERS

Manufacturer	Model designation	Radio equipment approval number
Continental ADC	ARS4-A (radar sensor)	011 23
Continental ADC	ARS4-B (radar sensor)	011 14
Continental ADC	ARS6-A (radar sensor)	038 22
Continental ADC	ARS4-C (radar sensor)	011 19
Bosch	FR5CPCCF (radar sensor)	011 19
Bosch	LRR3 (radar sensor)	011 19

Manufacturer	Model designation	Radio equipment approval number
Bosch	MRR1Rear (radar sensor)	011 17
Bosch	MRRe14FCR (radar sensor)	005 17
Continental Antenna	RKE213E1 (aerial amplifier)	005 24
Continental Antenna	RKE223E1GNS (aerial amplifier)	005 22
Continental Antenna	2032V00ME1 (aerial amplifier)	005 24
Continental Automotive	CMKG1 (locking system)	005 20
Continental Automotive	CMKG2 (locking system)	005 23
Continental Automotive	CMKG3 (locking system)	005 24
Continental Automotive	MARS Keyless (locking system)	005 20
Continental Automotive	NTG7 MID	005 23
Continental Automotive	NTG7 HIGH	005 23
Continental Automotive	NTG7 PREMIUM	005 23
Continental Automotive	NTG7 PREMIUM PLUS	005 23
Continental Automotive Technologies	NTG7Q MID LF2 (head unit)	005 23
Continental Automotive Technologies	NTG7Q HIGH LF2 (head unit)	005 23

Manufacturer	Model designation	Radio equipment approval number
Continental Automotive Technologies	NTG7Q PREMIUM LF2 (head unit)	005 23
HELLA	DM4 (locking system)	005 20
Hirschmann	920287A (locking system)	005 18
Hirschmann	920287B (locking system)	005 18
Hirschmann	920702A (locking system)	005 22
Huf Baolong	TSSRE4A (tyre pressure sensor)	005 20
HUF	HUF13482 (locking system)	005 24
HUF	HUF13145 (locking system)	005 22
HUF	HUF14632 (locking system)	005 21
HUF	HUF4761 (locking system)	005 21
MARQUARDT	DC12A (locking system)	005 20
MARQUARDT	DC12B (locking system)	005 20
MARQUARDT	DC12K (locking system)	005 20
MARQUARDT	MS2 (locking system)	011 17
MARQUARDT	MS4 (locking system)	005 19
MARQUARDT	MS5 (locking system)	005 24
MARQUARDT	MS6 (locking system)	005 24

Manufacturer	Model designation	Radio equipment approval number
MARQUARDT	MS7 (locking system)	005 24
MARQUARDT	MK1 (locking system)	005 24
MARQUARDT	MK2 (locking system)	005 24
MARQUARDT	MK3 (locking system)	005 24
MARQUARDT	MU3 (locking system)	005 23
MARQUARDT	3350.38 (locking system)	005 22
MARQUARDT	MUB1 (locking system)	005 24
Meta System	MUW II (interior protection)	011 19
Schrader	AG5SP4 (tyre pressure sensor)	005 15
Schrader	AG3PF4 (tyre pressure sensor)	005 15
Schrader	BG3FP4 (tyre pressure sensor)	005 20
Schrader	GG4T (tyre pressure sensor)	005 17
Schrader	DG6W2D4 (tyre pressure sensor)	005 18
Schrader	MC34MA4 (tyre pressure monitoring system control unit)	011 11
Valeo	ARTEMIS-SUB-01 (locking system)	011 18

Manufacturer	Model designation	Radio equipment approval number
Veoneer	77GHz MMRV1 (radar sensor)	005 24
Veoneer	77V12BSM (radar sensor)	011 19
Veoneer	77V12CRN (radar sensor)	011 19
Veoneer	77V125CRN (radar sensor)	038 21
Vitesco	HFA30 (radar sensor)	011
WITTE-Velbert	SDHTAG3NFC (locking system)	005 20

SINGAPORE

REGULATORY RADIO IDENTIFIERS

Manufacturer	Model designation	Radio equipment approval number
		Complies with IMDA Standards
Continental ADC	ARS4-A (radar sensor)	DA103365
Continental ADC	ARS4-B (radar sensor)	DA103365
Continental ADC	ARS6-A (radar sensor)	DA103365
Continental ADC	ARS4-C (radar sensor)	DA103365
Bosch	FR5CPCCF (radar sensor)	DA103365
Bosch	LRR3 (radar sensor)	DA103365

Manufacturer	Model designation	Radio equipment approval number
Bosch	MRR1Rear (radar sensor)	DA103365
Bosch	MRRe14FCR (radar sensor)	DA103365
Bosch	F5CP12 (radar sensor)	N3827-22
Continental Antenna	RKE213E1 (aerial amplifier)	DA105282
Continental Antenna	RKE223E1GNS (aerial amplifier)	DA107248
Continental Antenna	2032V00ME1 (aerial amplifier)	DA103787
Continental Automotive	CMKG1 (locking system)	DA103365
Continental Automotive	CMKG2 (locking system)	DB106440
Continental Automotive	CMKG3 (locking system)	DB106440
Continental Automotive	MARS Keyless (locking system)	DA105282
Continental Automotive	UWBTRX1 (locking system)	DB107091
Continental Automotive	D-WMI2020A (control unit)	DA103365
Continental Automotive Technologies	NTG7Q MID LF2 (head unit)	DA105282
Continental Automotive Technologies	NTG7Q HIGH LF2 (head unit)	DA105282
Continental Automotive Technologies	NTG7Q PREMIUM LF2 (head unit)	DA105282
Harman Becker	HERMES 3.0 (communication module)	DB107091

Manufacturer	Model designation	Radio equipment approval number
HELLA	DM4 (locking system)	DA103365 N3308-22
Hirschmann	920287A (locking system)	DA103365
Hirschmann	920287B (locking system)	DA103365
Hirschmann	920702A (locking system)	DA105282
HUF	HUF13482 (locking system)	DB105654
HUF	HUF13145 (locking system)	N2197-22
HUF Baolong	TSSRE4A (tyre pressure sensor)	DA30668
HUF Baolong	TSSSG4G6b (tyre pressure sensor)	DA28467
HUF	HUF14632 (locking system)	DA105282
HUF	HUF4761 (locking system)	DA103365
MARQUARDT	DC12A (locking system)	DA103787
MARQUARDT	DC12B (locking system)	DA103365
MARQUARDT	DC12K (locking system)	DA103365
MARQUARDT	MS2 (locking system)	DA103787
MARQUARDT	MS4 (locking system)	DA103787
MARQUARDT	MS6 (locking system)	DA103787
MARQUARDT	MS7 (locking system)	DB103787

Manufacturer	Model designation	Radio equipment approval number
MARQUARDT	MK1 (locking system)	DA103365
MARQUARDT	MK2 (locking system)	DA103365
MARQUARDT	MK3 (locking system)	DA103787
MARQUARDT	MU3 (locking system)	DA103787
MARQUARDT	MBU1 (locking system)	DA103787
MARQUARDT	3350.38 (locking system)	DB107091
Meta System	ITS/TPS (interior protection)	DA103365
Meta System	MUW II (interior protection)	DA103365
Schrader	AG5SP4 (tyre pressure sensor)	DA103787
Schrader	AG3PF4 (tyre pressure sensor)	DA107968
Schrader	BG3FP4 (tyre pressure sensor)	DA103365
Schrader	GG4T (tyre pressure sensor)	DA105282
Schrader	DG6W2D4 (tyre pressure sensor)	DA105282
Veoneer	77GHz MMRV1 (radar sensor)	DA103365
Veoneer	77V12BSM (radar sensor)	DA103365
Veoneer	77V12CRN (radar sensor)	DA103365
Veoneer	77V125CRN (radar sensor)	DA103365
Vitesco	HFA30 (radar sensor)	N4949-23
WITTE-Velbert	SDHTAG3NFC (locking system)	DA107248

SOUTH AFRICA

REGULATORY RADIO IDENTIFIERS

Manufacturer	Model designation	Radio equipment approval number
Continental ADC	ARS4-A (radar sensor)	TA-2014/1637
Continental ADC	ARS4-B (radar sensor)	TA-2014/1783
Continental ADC	ARS6-A (radar sensor)	TA-2022/1837
Continental ADC	ARS4-C (radar sensor)	TA-2019/1595
Bosch	FR5CPCCF (radar sensor)	TA-2019/1200
Bosch	MRR1Rear (radar sensor)	TA-2014/212
Bosch	MRRe14FCR (radar sensor)	TA-2017/2013
Bosch	LRR3 (radar sensor)	TA-2009/464
Bosch	F5CP12 (radar sensor)	TA-2022/0153
Continental Antenna	RKE213E1 (aerial amplifier)	TA-2015/1438
Continental Antenna	RKE223E1 (aerial amplifier)	TA-2020/043
Continental Automotive	CMKG1 (locking system)	TA-2019/5405

Manufacturer	Model designation	Radio equipment approval number
Continental Automotive	CMKG2 (locking system)	TA-2022/3611
Continental Automotive	CMKG3 (locking system)	TA-2024/2844
Continental Automotive	MARS Keyless (locking system)	TA-2016/3500
Continental Automotive	UWBTRX1 (locking system)	TA-2021/3460
Continental Automotive Technologies	NTG7Q MID LF2 (head unit)	TA-2023/0091
Continental Automotive Technologies	NTG7Q HIGH LF2 (head unit)	TA-2023/0111
Continental Automotive Technologies	NTG7Q PREMIUM LF2 (head unit)	TA-2023/0090
Gentex	MUAHL5 (convenience system)	TA-2015/1386
HELLA	DM4 (locking system)	TA-2017/2518
Hirschmann	920287A (locking system)	TA-2011/374
Hirschmann	920287B (locking system)	TA-2013/1262
Hirschmann	920702A (locking system)	TA-2022/0162
Huf Baolong	TSSRE4A (tyre pressure sensor)	TA-2017/1393
Huf Baolong	TSSSG4G6b (tyre pressure sensor)	TA-2019/1440
HUF	HUF13482 (locking system)	TA-2024/2001

Manufacturer	Model designation	Radio equipment approval number
HUF	HUF13145 (locking system)	TA-2022/0375
HUF	HUF14632 (locking system)	TA-2015/1077
HUF	HUF4761 (locking system)	TA-2012/1543
Meta System	ITS Master (interior protection)	TA-2011/1636
Meta System	ITS Sensor (interior protection)	TA-2011/1227
Meta System	MUW II (interior protection)	TA-2019/261
MARQUARDT	DC12A (locking system)	TA-2017/312
MARQUARDT	DC12B (locking system)	TA-2011/370
MARQUARDT	DC12K (locking system)	TA-2012/1542
MARQUARDT	MS2 (locking system)	TA-2016/3314
MARQUARDT	MS4 (locking system)	TA-2019/843
MARQUARDT	MS5 (locking system)	TA-2020/5765
MARQUARDT	MS6 (locking system)	TA-2023/3673
MARQUARDT	MS7 (locking system)	TA-2024/1232
MARQUARDT	MK1 (locking system)	TA-2015/179
MARQUARDT	MK2 (locking system)	TA-2015/180
MARQUARDT	MK3 (locking system)	TA-2024/0439

Manufacturer	Model designation	Radio equipment approval number
MARQUARDT	3350.38 (locking system)	TA-2018/3985
MARQUARDT	MU3 (locking system)	TA-2023/1835
MARQUARDT	MUB1 (locking system)	TA-2024/0505
Schrader	AG5SP4 (tyre pressure sensor)	TA-2015/072
Schrader	AG3PF4 (tyre pressure sensor)	TA-2019-133
Schrader	BG3FP4 (tyre pressure sensor)	TA-2020/7731
Schrader	MFR (tyre pressure monitoring system control unit)	TA-2019/273
Schrader	MFR3 (tyre pressure monitoring system control unit)	TA-2019-273
Schrader	GG4T (tyre pressure sensor)	TA-2017/3884
Schrader	DG6W2D4 (tyre pressure sensor)	TA-2017/2933
Schrader	MC34MA4 (tyre pressure monitoring system control unit)	TA-2011/1370
Veoneer	77GHz MMRV1 (radar sensor)	TA-2015/2087
Veoneer	77V12BSM (radar sensor)	TA-2019/1380
Veoneer	77V12CRN (radar sensor)	TA-2019/1382
Veoneer	77V125CRN (radar sensor)	TA-2021/0150
Vitesco	HFA30 (radar sensor)	TA-2023/2469
WITTE-Velbert	SDHTAG3NFC (locking system)	TA-2020/055

SOUTH KOREA

REGULATORY RADIO IDENTIFIERS

Manufacturer	Model designation	Radio equipment approval number
Continental Antenna	RKE223E1 (aerial amplifier)	R-C-Ca3-RKE223E1
Continental Automotive	CMKG2 (locking system)	R-R-TeH-CMKG2
Continental Automotive Technologies	NTG7Q LF2 (head unit)	R-R-TeH- NTG7QLF2
Huf Baolong	TSSRE4A (tyre pressure sensor)	R-CRM-HHFTSSRE4A
Huf Baolong	TSSSG4G6 (tyre pressure monitoring system control unit)	R-REM-HHFTSSSG4G6
HUF	HUF14632 (locking system)	MSIP-CRM-HHF-HUF-14632
MARQUARDT	MS6 (locking system)	R-C-MQU-MS6
Schrader	MFR (tyre pressure monitoring system control unit)	MSIP-REM-SRD-MFR

Manufacturer	Model designation	Radio equipment approval number
Schrader	MFR3 (tyre pressure monitoring system control unit)	KCC R-R-SRD-MFR3A
Schrader	MC34MA4 (tyre pressure monitoring system control unit)	KCC-REM-SRD-MRXMC34MA4
Schrader	AG5SP4 (tyre pressure sensor)	MSIP-CRM-SRD-AG5SP4
Schrader	AG3PF4 (tyre pressure sensor)	R-C-SRD-AG3PF4
Schrader	BG3FP4 (tyre pressure sensor)	R-C-SRD-BG3FP4
Schrader	GG4T (tyre pressure sensor)	MSIP-CRM-SRD-GG4T
Schrader	DG6W2D4 (tyre pressure sensor)	R-CRM-SRD-DG6W2D4
Vitesco	HFA30) (radar sensor)	R-R-vT2-HFA30

TANZANIA

TCRA Approved
XXXXXX/XXX/XXXX

REGULATORY RADIO IDENTIFIERS

Manufacturer	Model designation	Radio equipment approval number
Continental Antenna	RKE223E1 (aerial amplifier)	TCRA/TAC/018/2016

THAILAND

REGULATORY RADIO IDENTIFIERS

Manufacturer	Model designation	Radio equipment approval number
Continental Automotive Technologies	NTG7Q PREMIUM LF2 (head unit)	130111-23-0132

ARTEMIS and MB - 4G eCall box:

This radio communication device has an electromagnetic wave that complies with the Safety Standard for the Use of Radiocommunication Equipment on Human Health announced by the National Telecommunications Commission.

TOGO

REGULATORY RADIO IDENTIFIERS

Manufacturer	Model designation	Radio equipment approval number
Continental Antenna	RKE223E1 (aerial amplifier)	No. 024/19
Continental Automotive	MARS Keyless (locking system)	No. 059/24
HELLA	DM4 (locking system)	No. 039/19
Hirschmann	920287A (locking system)	No. 089/19
Hirschmann	920287B (locking system)	No. 088/19
HUF	HUF4761 (locking system)	No. 041/19
MARQUARDT	DC12A (locking system)	No. 055/19
MARQUARDT	DC12B (locking system)	No. 057/19

Manufacturer	Model designation	Radio equipment approval number
MARQUARDT	DC12K (locking system)	No. 056/19
MARQUARDT	MS2 (locking system)	No. 008/19
MARQUARDT	MS4 (locking system)	No. 101/19
MARQUARDT	MK1 (locking system)	No. 021/19
MARQUARDT	MK2 (locking system)	No. 022/19
MARQUARDT	3350.38 (locking system)	No. 016/20

UKRAINE

REGULATORY RADIO IDENTIFIERS

Manufacturer	Model designation	Radio equipment approval number
Continental ADC	ARS4-A (radar sensor)	UA RF: 1CONT0004
Continental ADC	ARS4-B (radar sensor)	UA RF: 1CONT0001
Continental ADC	ARS6-A (radar sensor)	UA RF: 1CONT0013
Continental Antenna	RKE213E1 (aerial amplifier)	UKR.355-123/19
Continental Antenna	RKE223E1GNS (aerial amplifier)	UA.R.TR.052.682-19
Continental Antenna	2032V00ME1 (aerial amplifier)	UA.TR.109.R.0412-24
Continental Automotive	CMKG1 (locking system)	UA1.001.021175-20-TE
Continental Automotive	CMKG2 (locking system)	UA.032.CT.0105-23
Continental Automotive	CMKG3 (locking system)	UA.032.CT.0354-24
Continental Automotive	MARS Keyless (locking system)	RTS.UKR.355-34/18
Continental Automotive Technologies	NTG7Q MID LF2 (head unit)	UA.TR.052
Continental Automotive Technologies	NTG7Q HIGH LF2 (head unit)	UA.TR.052
Continental Automotive Technologies	NTG7Q PREMIUM LF2 (head unit)	UA.TR.052
HELLA	DM4 (locking system)	UA.TR.109
Hirschmann	920287A (locking system)	UKR.355-7/20
Hirschmann	920287B (locking system)	UKR.355-8/20
Huf Baolong	TSSRE4A (tyre pressure sensor)	UA 1.001.018568-19-TE
Huf Baolong	TSSSG4G6b (tyre pressure monitoring system control unit)	UA 1.001.019289-19-TE
HUF	HUF13145 (locking system)	UKR.355-113/19
HUF	HUF14632 (locking system)	UKR.355-113/19
HUF	HUF4761 (locking system)	UA1.001.018653-19-TE
MARQUARDT	DC12A (locking system)	UA.R.TR.052.307-19
MARQUARDT	DC12B (locking system)	UA.R.TR.052.308-19

Manufacturer	Model designation	Radio equipment approval number
MARQUARDT	DC12K (locking system)	UA.R.TR.052.309-19
MARQUARDT	MS2 (locking system)	UA1.001.019129-19-TE
MARQUARDT	MS4 (locking system)	UA.R.TR.052.528-19
MARQUARDT	MS5 (locking system)	UA.TR.028
MARQUARDT	MS7 (locking system)	UA.TR.001.0355.30.00624-24
MARQUARDT	MK1 (locking system)	UA1.001.019233-19-TE
MARQUARDT	MK2 (locking system)	UA1.001.019234-19-TE
MARQUARDT	MK3 (locking system)	UA.TR.001.0355.30.01316-23
MARQUARDT	MU3 (locking system)	UA.TR.001.0355.30.01276-23
MARQUARDT	MUB1 (locking system)	UA.TR.001.0355.30.00623-24
MARQUARDT	3350.38 (locking system)	UA1.001.018888-19-TE
Schrader	AG5SP4 (tyre pressure sensor)	UA.TR. 032
Schrader	AG3PF4 (tyre pressure sensor)	UA-TR-001
Schrader	BG3FP4 (tyre pressure sensor)	UA-TR-109
Schrader	GG4T (tyre pressure sensor)	UA.TR. 028
Schrader	DG6W2D4 (tyre pressure sensor)	UA.TR. 028

Manufacturer	Model designation	Radio equipment approval number
Valeo	ARTEMIS-SUB-01 (locking system)	UA.R.TR.052.071-24
WITTE-Velbert	SDHTAG3NFC (locking system)	UA.R.TR.052.120-20

UZBEKISTAN

REGULATORY RADIO IDENTIFIERS

Manufacturer	Model designation
Continental Antenna	RKE213E1 (aerial amplifier)
Continental Antenna	RKE223E1GNS (aerial amplifier)
Continental Antenna	2032V00ME1 (aerial amplifier)
Continental Automotive	CMKG1 (locking system)
Continental Automotive	CMKG2 (locking system)
Continental Automotive	CMKG3 (locking system)
Continental Automotive	MARS Keyless (locking system)
HELLA	DM4 (locking system)
Hirschmann	920287A (locking system)
Hirschmann	920287B (locking system)
Hirschmann	920702A (locking system)

Manufacturer	Model designation
HUF	HUF13145 (locking system)
MARQUARDT	DC12A (locking system)
MARQUARDT	DC12B (locking system)
MARQUARDT	DC12K (locking system)
MARQUARDT	MS2 (locking system)
MARQUARDT	MS4 (locking system)
MARQUARDT	MS5 (locking system)
MARQUARDT	MS6 (locking system)
MARQUARDT	MS7 (locking system)
MARQUARDT	MK1 (locking system)
MARQUARDT	MK2 (locking system)
MARQUARDT	MK3 (locking system)
MARQUARDT	MU3 (locking system)
MARQUARDT	3350.38 (locking system)
MARQUARDT	MUB1 (locking system)
Vitesco	HFA30 (radar sensor)
Valeo	ARTEMIS-SUB-01 (locking system)
WITTE-Velbert	SDHTAG3NFC (locking system)

UNITED ARAB EMIRATES

TDRA هيئة تنظيم الاتصالات والحكومة الرقمية
TELECOMMUNICATIONS AND DIGITAL GOVERNMENT REGULATORY AUTHORITY

REGULATORY RADIO IDENTIFIERS

Manufacturer	Model designation	Radio equipment approval number
Continental ADC	ARS4-A (radar sensor)	TA RTTE: Er558296/17, DA40068/15
Continental ADC	ARS4-C (radar sensor)	TA RTTE: ER77062/19, DA40068/15
Bosch	FR5CPCCF (radar sensor)	TA RTTE: ER74533/19, DA36758/14
Bosch	NRCS2P (radar sensor)	TA RTTE: ER88778/20, DA36758/14
Continental Antenna	RKE213E1 (aerial amplifier)	TRA ER64693/18, DA65993/17

Manufacturer	Model designation	Radio equipment approval number
Continental Antenna	RKE223E1GNS (aerial amplifier)	TRA ER76442/19, DA65993/17
Continental Antenna	2032V00ME1 (aerial amplifier)	TRA ER38672/24, DA65993/17
Continental Automotive	CMKG1 (locking system)	TRA ER77964/20, DA0018994/09
Continental Automotive	CMKG2 (locking system)	TRA ER17713/23, DA36975/14
Continental Automotive	CMKG3 (locking system)	TRA ER37329/24, DA36975/14
Continental Automotive	MARS Keyless (locking system)	TRA ER56005/17, DA44932/15
Continental Automotive	UWBTRX1 (locking system)	TRA ER11321/22, DA36975/14
Continental Automotive Hungary	Ramses 1.5 (communication module)	ER32722/24
Continental Automotive Technologies	NTG7Q MID LF2 (head unit)	TDRA ER17731/23, DA76163/18
Continental Automotive Technologies	NTG7Q HIGH LF2 (head unit)	TDRA ER17730/23, DA76163/18
Continental Automotive Technologies	NTG7Q PREMIUM LF2 (head unit)	TDRA ER17732/23, DA76163/18
Gentex	MUAHL5 (convenience system)	TRA ER41849/15, DA35176/14
Harman Becker	HERMES 3.0 (communication module)	TRA ER03601/21, DA0028019/10
HELLA	DM4 (locking system)	TRA ER56616/17, DA44932/15
Hirschmann	920287A (locking system)	TRA ER52213/17, DA35219/14
Hirschmann	920287B (locking system)	TRA ER42011/15, DA35219/14
Hirschmann	920702A (locking system)	TRA ER10723/22, DA35219/14
Huf Baolong	TSSRE4A (tyre pressure sensor)	TRA ER57806/17, DA36976/14
Huf Baolong	TSSSG4G6b (tyre pressure monitoring system control unit)	TRA ER7307/19, DA0086237/12

Manufacturer	Model designation	Radio equipment approval number
HUF	HUF13482 (locking system)	TRA ER33320/24
HUF	HUF13145 (locking system)	TRA ER08607/22, DA36976/14
HUF	HUF14632 (locking system)	TRA ER63716/18, DA36976/14
HUF	HUF4761 (locking system)	TRA ER55496/17, DA36976/14
HUF	HUF13145 (locking system)	TRA ER08607/22 DA36976/14
MARQUARDT	DC12A (locking system)	TRA ER53465/17, DA0018994/09
MARQUARDT	DC12B (locking system)	TRA ER0067828/11, DA0018994/09
MARQUARDT	DC12K (locking system)	TRA ER0067829/11, DA0018994/09
MARQUARDT	MS2 (locking system)	TRA ER52668/17, DA0018994/09
MARQUARDT	MS4 (locking system)	TRA ER71616/19, DA0018994/09
MARQUARDT	MS5 (locking system)	TRA ER80720/20, DA0018994/09
MARQUARDT	MS6 (locking system)	TRA ER28697/24, DA0018994/09
MARQUARDT	MS7 (locking system)	TRA ER29729/24, DA0018994/09
MARQUARDT	MK1 (locking system)	TRA ER64145/18, DA0018994/09
MARQUARDT	MK2 (locking system)	TRA ER64146/18, DA0018994/09
MARQUARDT	MK3 (locking system)	TRA ER26811/23, DA0018994/09
MARQUARDT	3350.38 (locking system)	TRA ER69280/19, DA0018994/09
MARQUARDT	MU3 (locking system)	TRA ER25917/23, DA0018994/09
MARQUARDT	MUB1 (locking system)	TRA ER29344/24, DA0018994/09
Schrader	AG5SP4 (tyre pressure sensor)	TRA ER37156/15, DA0047074/10

Manufacturer	Model designation	Radio equipment approval number
Schrader	AG3PF4 (tyre pressure sensor)	TRA ER70533/19, DA0047074/10
Schrader	BG3FP4 (tyre pressure sensor)	TRA ER96175/21, DA0047074/10
Schrader	GG4T (tyre pressure sensor)	TRA ER57985/17, DA0047074/10
Schrader	DG6W2D4 (tyre pressure sensor)	TRA ER960528/18, DA0047074/10
Schrader	MC34MA4 (tyre pressure monitoring system control unit)	TRA ER37066/15, DA0047074/10
Sennheiser	M3IETW2L (Earbud)	ER78231/20
Sennheiser	BTT100 (Bluetooth Audio Transmitter)	ER64728/18
VALEO	ARTEMIS-ECE-01 (locking system)	TRA ER38896/24, DA0051190/10
Veoneer	77GHz MMRV1 (radar sensor)	TA RTTE: ER96352/21; 0020858/10
Veoneer	77V12BSM (radar sensor)	TA RTTE: ER72324/19; 0020858/10
Veoneer	77V12CRN (radar sensor)	TA RTTE: ER72323/19; 0020858/10
Veoneer	77V125CRN (radar sensor)	TA RTTE: ER95775/21; 0020858/10
Vitesco	HFA30 (radar sensor)	TRA ER25428/23
WITTE-Velbert	SDHTAG3NFC (locking system)	TRA ER79695/20, DA0018994/09

UNITED KINGDOM
Additional specific information

Charging unit for the wireless charging of mobile communication devices (WMI):

D-WMI2016A, D-WMI2017A, D-WMI2017B:

Restrictions or Requirements in the UK: A separation distance of at least 10 cm between all persons and the device must be provided at all times. The Device must not be co-located or operating in conjunction with any other antenna or transmitter.

D-WMI2020A:

Restrictions or Requirements in the UK: A separation distance of at least 0 cm between all persons and the device must be provided at all times. The Device must not be co-located or operating in conjunction with any other antenna or transmitter.

UNITED STATES

REGULATORY RADIO IDENTIFIERS

Manufacturer	Model designation	Radio equipment approval number
Continental Automotive	CMKG2 (locking system)	FCC ID: KR5CMKG2
Continental Automotive Technologies	NTG7Q MID LF2 (head unit)	FCC ID: NTG7QMIDLF2
Continental Automotive Technologies	NTG7Q HIGH LF2 (head unit)	FCC ID: NTG7QHIGLF2
Continental Automotive Technologies	NTG7Q PREMIUM LF2 (head unit)	FCC ID: NTG7QPRELF2
HUF	HUF13145 (locking system)	FCC ID: YGOHUF13145
MARQUARDT	MS6 (locking system)	FCC ID:IYZMS6
Sennheiser	M3IETW2R (Earbud)	FCC ID: DMOM3IETW2R
Sennheiser	M3IETW2L (Earbud)	FCC ID: DMOM3IETW2L
Sennheiser	BTT100 (Bluetooth Audio Transmitter)	FCC ID: DMOBTT100
Vitesco	HFA30 (radar sensor)	FCC ID: 2A6TC-HFA30
WITTE-Velbert	SDHTAG3NFC (locking system)	FCC ID: DMOBTT100

Information on installation clearances

Charging unit for the wireless charging of mobile communication devices (WMI):

The charging unit for wireless charging of mobile devices (WMI) complies with FCC and IC radiation exposure limits established for an uncontrolled environment. This equipment must be installed and operated with a minimum distance of 0 cm (in contact) between the radiation source and your body. This transmitter must not be placed in the same location as, or used at the same time as, another transmitter or aerial.

Rear Seat Entertainment System:

For USA only: "This device complies with part 15 of the FCC Rules and ISED Canada licence-exempt RSS standard(s). Operation is subject to the following two conditions: (1) This device must not cause any harmful interference, and (2) This device must accept any interference received, including interference that may cause undesired operation.

Changes or modifications not expressly approved by the party responsible for compliance could void the user's authority to operate the equipment.

This device must be installed and used at a distance of at least 6 cm from the body."

For Canada only: "This device complies with ISED Canada RSS standards for licence-exempt two-way radios. Operation is subject to the following two conditions: (1) This device must not cause interference, and (2) This device must accept any interference received, including interference that may cause undesired operation of the device.

This equipment complies with ISED radiation exposure limits established for an uncontrolled environment. This equipment must be installed and operated with a minimum distance of 5 cm between the radiation source and your body."

Radar sensors:

ARS4-C (Continental ADC), ARS4-B (Continental ADC), ARS4-A (Continental ADC), FR5CPCCF (Bosch), MRR1REAR (Bosch), MRREVO14F (Bosch), LRR3

(Bosch), 77V12BSM (Veoneer), 77V12CRN (Veoneer), MMRV1 (Veoneer), HFA30 (Vitesco)

USA only: Information on exposure to high-frequency radiation:

This equipment complies with FCC radiation exposure limits established for an uncontrolled environment. This equipment must be installed and operated with a minimum distance of 20 cm between the radiation source and your body.

This transmitter must not be placed in the same location as, or used at the same time as, another aerial or transmitter.

For Canada only: This equipment should be installed and operated with a minimum distance of 20 cm between the radiation source and your body.

BT Audio Transmitter (BTT100):

This equipment complies with FCC and IC radiation exposure limits established for an uncontrolled environment. This equipment should be installed and operated with a minimum distance of 9 cm between the radiation source and your body.

This transmitter must not be placed in the same location as, or used at the same time as, another aerial or transmitter.

Infotainment system head unit (NTG7Q):

For USA only: This equipment complies with FCC and ISED radiation exposure limits established for an uncontrolled environment, the FCC guidelines for RF exposure and RSS Standard 102 of the ISED guidelines for RF exposure. This equipment must be installed and operated with a minimum distance of 20 cm between the radiation source and your body.

For Canada only: This equipment complies with FCC and ISED radiation exposure limits established for an uncontrolled environment, the FCC guidelines for RF exposure and RSS Standard 102 of the ISED guidelines for RF exposure. This equipment must be installed and operated with a minimum distance of 20 cm between the radiation source and your body.

VIETNAM

REGULATORY RADIO IDENTIFIERS

Manufacturer	Model designation	Radio equipment approval number
Continental ADC	ARS4-A (radar sensor)	SUNTECH VN C00082015
Continental ADC	ARS6-A (radar sensor)	SUNTECH VN C00082015
Continental ADC	ARS4-C (radar sensor)	SUNTECH VN C00082015
Bosch	FR5CPCCF (radar sensor)	SUNTECH VN C00082015
Bosch	MRR1Rear (radar sensor)	SUNTECH VN C00082015
Bosch	MRRe14FCR (radar sensor)	SUNTECH VN C00082015
Continental Antenna	RKE213E1 (aerial amplifier)	Suntech Vietnam Technology Company Limited C0274151118AF04A2
Continental Antenna	RKE223E1GNS (aerial amplifier)	CÔNG TY TNHH MERCEDES-BENZ, Mercedes-Benz Vietnam, Company Limited B0676160424AF03A3

Manufacturer	Model designation	Radio equipment approval number
Continental Automotive	CMKG1 (locking system)	Suntech Vietnam Technology Company Limited C0001070120AF04A2
Continental Automotive	CMKG2 (locking system)	Mercedes-Benz Vietnam Company Limited C0104060423AF04A3
Continental Automotive	CMKG3 (locking system)	Mercedes-Benz Vietnam Company Limited A113105124AF61A3
Continental Automotive	MARS Keyless (locking system)	Mercedes-Benz Vietnam Company Limited B0748240419AF04A2
Continental Automotive	UWBTRX1 (locking system)	Mercedes-Benz Vietnam B00172019
HELLA	DM4 (locking system)	Mercedes-Benz Vietnam Company Limited CO204030321AF04A3
HELLA	RS6 (locking system)	SUNTECH VN C00082015
Hirschmann	920702A (locking system)	Mercedes-Benz Vietnam Company Limited B0424070422AF04A3
Huf Baolong	TSSRE4A (tyre pressure sensor)	C0112200717AF04A2

Manufacturer	Model designation	Radio equipment approval number
HUF	HUF13145 (tyre pressure sensor)	C1071050922AF04A3
MARQUARDT	DC12A (locking system)	Suntech Vietnam Technology Company Limited C0208030321AF04A3
MARQUARDT	DC12B (locking system)	Suntech Vietnam Technology Company Limited C0076210121AF04A3
MARQUARDT	DC12K (locking system)	Suntech Vietnam Technology Company Limited C0077210121AF04A3
MARQUARDT	MS2 (locking system)	Suntech Vietnam Technology Company Limited C0075210121AF04A3
MARQUARDT	MS4 (locking system)	Suntech Vietnam Technology Company Limited C0913110821AF04A3
MARQUARDT	MS5 (locking system)	Suntech Vietnam Technology Company Limited C0141140520AF04A2
MARQUARDT	MS6 (locking system)	CÔNG TY TNHH MERCEDES-BENZ Mercedes-Benz Vietnam Company Limited C0471120824AF04A3

Manufacturer	Model designation	Radio equipment approval number
MARQUARDT	MS7 (locking system)	CÔNG TY TNHH MERCEDES-BENZ Mercedes-Benz Vietnam Company Limited C0225240424AE01A3
MARQUARDT	MK1 (locking system)	Suntech Vietnam Technology Company Limited C0049150121AF04A3
MARQUARDT	MK2 (locking system)	Suntech Vietnam Technology Company Limited C0050150121AF04A3
MARQUARDT	MU3 (locking system)	CÔNG TY TNHH MERCEDES-BENZ Mercedes-Benz Vietnam Company Limited C0547201223AF04A3
MARQUARDT	MUB1 (locking system)	CÔNG TY TNHH MERCEDES-BENZ Mercedes-Benz Vietnam Company Limited C0751151024AF04A3
MARQUARDT	3350.38 (locking system)	Suntech Vietnam Technology Company Limited C0131030221AF04A3
Schrader	AG5SP4 (tyre pressure sensor)	Suntech Vietnam Technology Company Limited C0002050119AF042A
Schrader	AG3PF4 (tyre pressure sensor)	Suntech Vietnam Technology Company Limited C0120220519AF04A2
Schrader	GG4T (tyre pressure sensor)	Suntech Vietnam Technology Company Limited C0170191017AF04A2
Schrader	DG6W2D4 (tyre pressure sensor)	Suntech Vietnam Technology Company Limited C0078070518AF04A2
Valeo	ARTEMIS-SUB-01 (locking system)	CÔNG TY TNHH MERCEDES-BENZ Mercedes-Benz Vietnam Company Limited C0931270624AF03A3
Veoneer	77GHz MMRV1 (radar sensor)	Mercedes-Benz Vietnam Company Limited
Veoneer	77V12BSM (radar sensor)	Mercedes-Benz Vietnam Company Limited
Veoneer	77V12CRN (radar sensor)	Mercedes-Benz Vietnam Company Limited
Veoneer	77V125CRN (radar sensor)	Mercedes-Benz Vietnam Company Limited
WITTE-Velbert	SDHTAG3NFC (locking system)	Mercedes-Benz Vietnam Company Limited A0847130820AF04A3

Information on the specific absorption rate (SAR)

INFORMATION ON THE SPECIFIC ABSORPTION RATE

The values have been determined and tested in accordance with the Décret n° 2019-1186 guideline relating to details of the specific absorption rate (SAR) of wireless vehicle components.

Further information and updates are available at the following website:

https://regulatoryradioinformation.corpinter.net/en

INFORMATION ON THE SPECIFIC ABSORPTION RATE

Vehicle components	SAR value in W/kg	Applicable limit value
D-WMI2020A	0.018 W/kg	4 W/kg
Gen20x.i2 LS3+	2.2 W/kg	4 W/kg
Gen20x.i2 LS4+	2.5 W/kg	4 W/kg
ARTEMIS communication module	0.471 W/kg	2 W/kg
HERMES communication module	< 0.4 W/kg	2 W/kg
RAMSES communication module	0.036 W/kg	2 W/kg
ECE DE003 & ECE DE004 compensators	< 0.2 W/kg	2 W/kg
NRCS2P	0.003 W/kg	2 W/kg
NTG6	0.199 W/kg	4 W/kg
NTG7	0.08 W/kg	2 W/kg
NTG7RSU	0.07 W/kg	2 W/kg
SM-T230NZ tablet PC	0.7 W/kg	4 W/kg
Radio data transmission telephone system	0.24 W/kg	2 W/kg

Importer information for regulatory radio components

FOR MOLDOVA ONLY:
Importer

S.C. GRAND PREMIUM S.R.L. Moldova

mun. Chisinau, str. Hîncesti sos., 2/2

FOR TURKEY ONLY:
Importer

Mercedes Benz Otomotiv Ticaret ve Hizmetler A.Ş. Genel Merkez

Akçaburgaz Mah. Süleyman Şah Cad. No: 6/1

34522 Esenyurt/İstanbul

FOR UKRAINE ONLY:
Importer

PJSC “AUTOCAPITAL”

Velyka Vasylkivska str. 15/2

01004 Kyiv

Ukraine

FOR THE UNITED KINGDOM ONLY:
Importer

Mercedes-Benz Cars UK Limited

Delaware Drive, Tongwell

Milton Keynes, MK15 8BA

England

Importer of Mercedes-Benz vans

Mercedes-Benz Vans UK Limited

Delaware Drive, Tongwell

Milton Keynes, MK15 8BA

Importer of Mercedes-Benz spare parts

Mercedes-Benz Parts Logistics

Delaware Drive, Tongwell

Milton Keynes, MK15 8BA

England

Further information and updates are available at the following web address:

https://regulatoryradioinformation.corpinter.net/en

Overview of vehicle identification plate, VIN and engine number

VEHICLE IDENTIFICATION PLATE

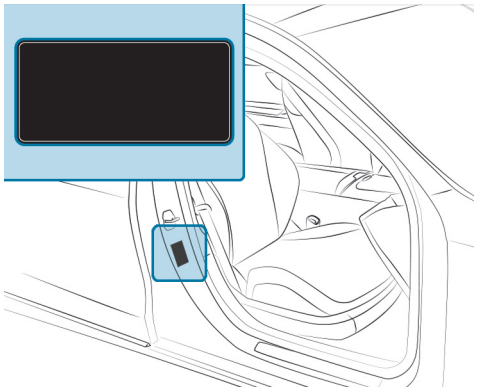

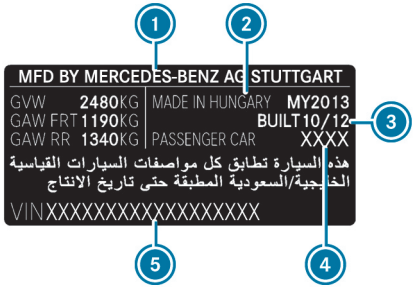

Vehicle identification plate (example: Kuwait)

1. Vehicle manufacturer
2. Place of manufacture
3. Manufacturing date
4. Vehicle model
5. VIN (vehicle identification number)

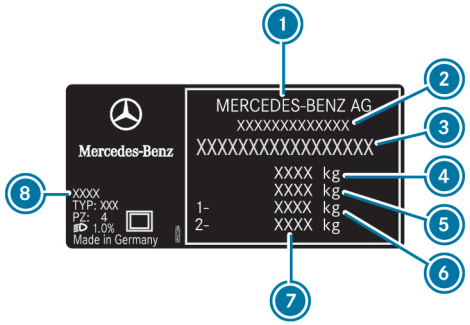

Vehicle identification plate (example: all other countries)

1. Vehicle manufacturer
2. EU operating permit number (for certain countries only)
3. VIN (vehicle identification number)
4. Permissible gross mass (kg)
5. Permissible gross mass of vehicle combination (kg) (for certain countries only)
6. Maximum permissible front axle load (kg)
7. Maximum permissible rear axle load (kg)
8. Paint code

The data in the illustration is shown as an example.

VIN BELOW THE RIGHT FRONT SEAT

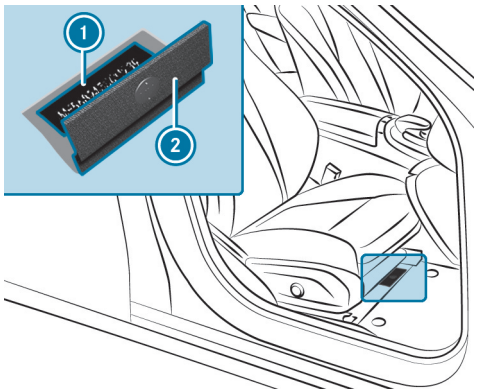

1 Imprinted VIN (vehicle identification number)
2 Floor covering

VIN AT THE LOWER EDGE OF THE WINDSCREEN

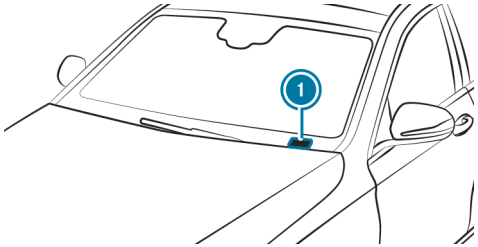

1 VIN (vehicle identification number) as a label

The VIN as a label at the lower edge of the windscreen is only available in certain countries.

ENGINE NUMBERS

The engine number is stamped onto the crankcase. More detailed information can be obtained at a qualified specialist workshop.

Operating fluids

Notes on operating fluids

WARNING
Risk of injury due to harmful operating fluids

Operating fluids can be toxic.

- ► When using, storing and disposing of operating fluids, observe the imprints on the respective original containers.
- ► Always keep operating fluids in the sealed original container.
- ► Always keep children away from operating fluids.

ENVIRONMENTAL NOTE
Pollution of the environment due to irresponsible disposal of operating fluids

Incorrect disposal of operating fluids can cause considerable damage to the environment.

- ► Dispose of operating fluids in an environmentally responsible manner.

OPERATING FLUIDS INCLUDE THE FOLLOWING:

- fuels
- DeNOx agent AdBlue® for exhaust gas aftertreatment
- lubricants
- coolant
- brake fluid
- windscreen washer fluid
- climate control system refrigerant

Only use products approved by Mercedes-Benz. Damage to the vehicle caused by the use of products that have not been approved is not covered by the Mercedes-Benz warranty or goodwill gestures.

The operating fluids approved by Mercedes-Benz can be identified by the following labels on the container:

- MB-Freigabe (e.g. MB-Freigabe 229.51)
- MB-Approval (e.g. MB-Approval 229.51)

FURTHER INFORMATION ON APPROVED OPERATING FLUIDS:

- in the Mercedes-Benz Specifications for Operating Fluids in accordance with the details on the label
  - at https://operatingfluids.mercedes-benz.com
- at a qualified specialist workshop

WARNING
Risk of fire or explosion from fuel

Fuels are highly flammable.

- Fire, naked flames, smoking and creating sparks must be avoided.
- Before and during refuelling, switch off the vehicle and, if fitted, the stationary heater.

WARNING
Risk of injury from fuels

Fuels are poisonous and hazardous to your health.

- Do not swallow fuel or let it come into contact with skin, eyes or clothing.
- Do not inhale fuel vapour.
- Keep children away from fuel.
- Keep doors and windows closed during the refuelling process.

If you or other people come into contact with fuel, observe the following:

- Immediately rinse fuel off your skin with soap and water.
- If fuel comes into contact with your eyes, immediately rinse them thoroughly with clean water. Seek medical attention immediately.
- If you swallow fuel, seek medical attention immediately. Do not induce vomiting.
- Change immediately out of clothing that has come into contact with fuel.

FLEXIBLE-FUEL VEHICLES CAN BE REFUELLED WITH THE FOLLOWING FUEL TYPES:

- unleaded premium-grade gasoline
- E85 fuel

- a mixture of E85 fuel and unleaded premium-grade gasoline

Flexible-fuel vehicles can be identified by the **Ethanol up to E85** sticker on the inside of the fuel filler flap.

Depending on the respective country of use, the fuels you can use in your vehicle may differ from the information in the Owner's Manual. The fuels that have been approved for your vehicle can be found on the information label on the inside of the fuel filler flap.

Fuel

INFORMATION ON FUEL QUALITY FOR VEHICLES WITH PETROL ENGINES
Observe the notes on operating fluids (⟶ page 862).

NOTE
Damage caused by the wrong fuel

Even small amounts of the wrong fuel could result in damage to the fuel system, the engine and the emission control system.

► Refuel only with unleaded, sulphur-free spark-ignition engine fuel.

Spark ignition engine fuel can contain up to 25% ethanol by volume.

► See the information label in fuel filler flap for compatible fuels.

Further information about compatible fuels can be obtained at a qualified specialist workshop.

Throughout Europe you can also find the compatibility labels on the fuel pump or pump nozzle suitable for your vehicle.

NEVER REFUEL WITH ANY OF THE FOLLOWING FUELS:

- Diesel
- Regular petrol with an octane number lower than 91 RON
- Petrol with more than 3% methanol by volume, e.g. M15, M30
- Petrol with metallic additives

If you have accidentally refuelled with the wrong fuel:

► Do not switch on the vehicle.

► Consult a qualified specialist workshop.

The following compatibility marks for fuel may apply to your vehicle:



Compatibility marks for fuel:

1. For petrol with a maximum of 5% ethanol by volume
2. For petrol with a maximum of 10% ethanol by volume
2. For petrol with a maximum of 25% ethanol by volume

If the available fuel is not sufficiently low in sulphur, it may produce unpleasant odours.

The recommended octane number can be found on the information label on the fuel filler flap (⟶ page 33).

ⓘ **Vehicle with M 256M petrol engine:** when you use 95 RON, there may be slight limitations in performance that have no further consequences.

If the recommended fuel is not available, you may also temporarily use regular unleaded petrol with an octane number of at least 91 RON.

This may reduce engine output and increase fuel consumption.

Never refuel using petrol with an even lower RON.

Further information on fuel can be obtained at a filling station or a qualified specialist workshop.

INFORMATION ON FUEL QUALITY FOR MERCEDES-AMG VEHICLES

Observe the notes on operating fluids (⟶ page 862).

NOTE
Damage caused by the wrong fuel

Even small amounts of the wrong fuel could result in damage to the fuel system, the engine and the emission control system.

- ► Refuel only with unleaded, sulphur-free spark-ignition engine fuel.

Spark ignition engine fuel can contain up to 25% ethanol by volume.

- ► See the information label in fuel filler flap for compatible fuels.

Further information about compatible fuels can be obtained at a qualified specialist workshop.

Throughout Europe you can also find the compatibility labels on the fuel pump or pump nozzle suitable for your vehicle.

NEVER REFUEL WITH ANY OF THE FOLLOWING FUELS:

- Diesel
- Regular petrol with an octane number lower than 91 RON
- Petrol with more than 3% methanol by volume, e.g. M15, M30
- Petrol with metallic additives

If you have accidentally refuelled with the wrong fuel:

- ► Do not switch on the vehicle.
- ► Consult a qualified specialist workshop.

The following compatibility marks for fuel may apply to your vehicle:



1. For petrol with a maximum of 5% ethanol by volume
2. For petrol with a maximum of 10% ethanol by volume
3. For petrol with a maximum of 25% ethanol by volume

If the available fuel is not sufficiently low in sulphur, it may produce unpleasant odours.

The recommended octane number can be found on the information label on the inside of the fuel filler flap (⟶ page 33).

For maximum engine output: refuel only with super unleaded petrol with an octane number of at least 98 RON. Alternatively, you can also refuel using premium-grade unleaded petrol with an octane number of at least 95 RON.

In exceptional cases, if the recommended fuel is not available, you may also use regular unleaded petrol with an octane number of at least 91 RON. This may reduce engine output and increase fuel consumption.

Never refuel using petrol with an even lower RON.

Further information on fuel can be obtained at a filling station or a qualified specialist workshop.

INFORMATION ON ADDITIVES IN PETROL (VEHICLES WITH PETROL ENGINES)
Observe the notes on operating fluids (⟶ page 862).

NOTE
Damage from use of unsuitable additives

Even small amounts of the wrong additive may lead to malfunctions occurring.

- Only add cleaning additives recommended by Mercedes-Benz to the fuel.

Mercedes-Benz recommends that you use brand-name fuels with additives.

In some countries, the fuel available may not have sufficient additives. Deposits could build up in the fuel injection system as a result. In this case, and following consultation with a qualified specialist workshop (e.g. a Mercedes-Benz service centre), mix the fuel with the cleaning additive recommended by Mercedes-Benz. Observe the notes and mixing ratios indicated on the tank.

NOTES ON FUEL QUALITY FOR VEHICLES WITH DIESEL ENGINES

GENERAL NOTES

Observe the notes on operating fluids (⟶ page 862).

WARNING
Risk of fire from fuel mixture

If you mix diesel fuel with petrol, the flash point of the fuel mixture is lower than that of pure diesel fuel.

- Never refuel using petrol in diesel engines.
- Never mix petrol with diesel fuel.

NOTE
Damage caused by the wrong fuel

Even small amounts of the wrong fuel could result in damage to the fuel system, the engine and the emission control system.

Vehicles with diesel particulate filters:

- Refuel using only sulphur-free diesel fuel.

  In countries without sulphur-free diesel fuel, refuel using only low-sulphur diesel fuel with a sulphur content of less than 50 ppm.

Vehicles without diesel particulate filters:

- Refuel using only diesel fuel with a sulphur content of less than 500 ppm.

NEVER REFUEL WITH ANY OF THE FOLLOWING FUELS:

- Petrol
- Marine diesel
- Heating oil
- Pure fatty acid methyl ester or vegetable oil
- Paraffin or kerosene

If you have accidentally refuelled with the wrong fuel:

- Do not switch on the vehicle.
- Consult a qualified specialist workshop.

NOTE
Shorter maintenance intervals due to fuel with increased bio-contents

When fuels with increased bio-contents are used, fuel residues with increased separation volume may occur. If fuels with increased bio-contents (compatibility marks B10 and B20) are used on an ongoing basis, this may lead to shorter maintenance intervals for the fuel filter.

If the vehicle is not used for an extended period of time (several weeks):

► Refuel the vehicle beforehand with diesel fuel with bio-contents < 10% to avoid possible deposits of bio-contents in the fuel tank.

The following fuel compatibility tags may apply to your vehicle:

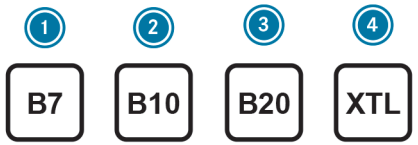

1. For diesel fuel with a maximum of 7% - fatty acid methyl ester by volume (bio-diesel)
2. For diesel fuel with a maximum of 10% - fatty acid methyl ester by volume (bio-diesel)
3. For diesel fuel with a maximum of 20% - fatty acid methyl ester by volume (bio-diesel)
4. For paraffinic diesel fuel

IN COMPLIANCE WITH EUROPEAN STANDARD EN 16942, YOU CAN FIND THE COMPATIBILITY TAGS IN THE FOLLOWING LOCATIONS:

- On the vehicle, on the information label on the fuel filler flap (⟶ page 33)
- On the fuel dispensers or pump nozzles suitable for your vehicle throughout Europe

ⓘ Only fill in diesel fuels with a high fatty acid methyl ester content (e.g. B20) if they comply with European Standard EN16709, and the corresponding compatibility tag is exhibited on your fuel filler flap.

Further information on fuel can be obtained at a filling station or at a qualified specialist workshop.

TANK CAPACITY AND FUEL RESERVE
Not for plug-in hybrid:

TOTAL FUEL TANK CAPACITY

Model	
All models	66.0 litres

FUEL TANK RESERVE

Model	
All models	7.0 litres

Plug-in hybrid:

TOTAL FUEL TANK CAPACITY (PLUG-IN HYBRID)

Model	
E 350 e with EQ hybrid technology	50.0 litres **Thailand only:** 43.0 l
All other models	50.0 litres

For Thailand only: The usable total fuel tank capacity is limited for certain plug-in hybrid vehicles. A reserve amount is therefore retained in the fuel tank, even when the tank is empty. This should be noted in particular for transportation or when in the workshop. Further information can be obtained at a qualified specialist workshop.

FUEL TANK RESERVE (PLUG-IN HYBRID)

Model	
All models	7.0 litres

TANK CAPACITY AND FUEL RESERVE (MERCEDES-AMG VEHICLES)

TOTAL FUEL TANK CAPACITY

Saloon and Estate	
Mercedes-AMG E 53 Hybrid 4MATIC+	60.0 litres

FUEL TANK RESERVE

Saloon and Estate	
Mercedes-AMG E 53 Hybrid 4MATIC+	10.0 litres

AdBlue® (vehicles with a diesel engine only)

NOTES ON ADBLUE®

Observe the notes on operating fluids (⟶ page 862).

AdBlue® is a water-soluble fluid for the NOx exhaust gas aftertreatment of diesel engines.

It may be improper or punishable in some countries to operate a vehicle that uses no AdBlue® or one that does not comply with the specifications of this Owner's Manual.

NOTE

Malfunctions due to the dilution of AdBlue® or the use of additive-enhanced AdBlue®

The function of the NOx exhaust gas aftertreatment can be impaired by the use of unsuitable denoxification agents.

- Only use AdBlue® in accordance with ISO 22241.
- Do not dilute AdBlue® with water.
- Do not use additive-enhanced AdBlue®.

NOTE
Damage and malfunctions due to impurities in AdBlue®

CONSEQUENCES OF IMPURITIES IN ADBLUE®:

- increased emission values
- damage to the catalytic converter
- NOx exhaust gas aftertreatment malfunctions

▶ Avoid impurities in AdBlue®.

AdBlue® residues crystallise after a period of time, and contaminate the surfaces with which they come into contact. Clean the dirty surfaces with water as soon as possible.

When you open the AdBlue® tank, small amounts of ammonia vapour may escape. Do not inhale any ammonia vapours that may be released. Only fill the AdBlue® tank in well-ventilated areas.

ADBLUE® FILLING QUANTITY AND CONSUMPTION
Not for plug-in hybrid:

TOTAL CAPACITY OF ADBLUE® TANK

Model	Total capacity
All models	24.0 litres

Plug-in hybrid:

TOTAL CAPACITY OF ADBLUE® TANK (PLUG-IN HYBRID)

Model	Total capacity
All models	24.0 litres

ADBLUE® CONSUMPTION
The average AdBlue® consumption is between 1% and 5% of fuel consumption. As with fuel consumption, AdBlue® consumption is highly dependent upon your driving style and the operating conditions. For this reason, your vehicle's actual consumption figures in day-to-day operating conditions may differ from the average consumption figures calculated. The frequency at which you will have to top up with AdBlue® will also vary. Have the AdBlue® supply checked at a qualified specialist workshop before embarking on journeys outside Europe. Consult a qualified specialist workshop prior to longer stays outside Europe, .

ADBLUE® FILL LEVEL AND RANGE
The AdBlue® range and level can be shown on the driver display.

The AdBlue® range indicated is highly dependent upon driving style and operating conditions. The actual range may therefore differ from the range currently indicated on the driver display.

The information supplied in the Owner's Manual regarding the reserve quantity at the first warning on the driver display and the minimum top-up quantity when the AdBlue® tank is empty is also to be viewed as guide values.

Engine oil

NOTES ON ENGINE OIL
Observe the notes on operating fluids (⟶ page 862).



NOTE
Engine damage caused by an incorrect oil filter, incorrect oil or additives

- Do not use engine oils or oil filters other than those which meet the specifications necessary for the prescribed service intervals.
- Do not alter the engine oil or oil filter in order to achieve longer change intervals than prescribed.
- Do not use additives.
- Have the engine oil changed after the prescribed intervals.

Mercedes-Benz recommends having the oil changed at a qualified specialist workshop.

Only use engine oils approved for your vehicle by Mercedes-Benz.

ENGINE OIL QUALITY AND FILLING QUANTITY
Not for plug-in hybrid:

ENGINE OIL SPECIFICATION (PETROL ENGINES)

Petrol engines	MB-Freigabe or MB-Approval
All models	229.71 229.72*

ENGINE OIL SPECIFICATION (DIESEL ENGINES)

Diesel engines	MB-Freigabe or MB-Approval
E 450 d 4MATIC	229.52 229.61*
All other models	229.52, 229.61, 229.71 229.72*

* Recommended for the lowest possible fuel consumption (lowest SAE viscosity class in each case; observe possible restrictions of the approved SAE viscosity classes)

E 180; E 200; E 200 4MATIC, E 300: only use engine oils of viscosity class SAE 0W-20.

If the engine oils listed in the table are not available, you may add a maximum of 1.0 litre of the following engine oils once only.
Vehicles with a petrol engine: MB-Freigabe or MB-Approval 229.51, 229.52, 229.61 or ACEA C5
Vehicles with a diesel engine:
- **E 450 d 4MATIC:** MB-Freigabe or MB-Approval 229.52, 229.61 or ACEA C4
- **All other models:** MB-Freigabe or MB-Approval 229.51 or ACEA C5

Plug-in hybrid:

ENGINE OIL SPECIFICATION (PLUG-IN HYBRID VEHICLES WITH A PETROL ENGINE)

Petrol engines	MB-Freigabe or MB-Approval
All models	229.51 229.52*

ENGINE OIL SPECIFICATION (PLUG-IN HYBRID VEHICLES WITH A DIESEL ENGINE)

Diesel engines	MB-Freigabe or MB-Approval
All models	229.52*

* Recommended for the lowest possible fuel consumption (lowest SAE viscosity class in each case; observe possible restrictions of the approved SAE viscosity classes)

E 300 e with EQ Hybrid Technology; E 300 e 4MATIC with EQ Hybrid Technology; E 350 e with EQ Hybrid Technology; E 400 e 4MATIC with EQ Hybrid Technology: only use engine oils of viscosity class SAE 0W-40.

If the engine oils listed in the table are not available, you may add a maximum of 1.0 litre of the following engine oils once only.
Plug-in hybrid vehicles with a petrol engine: ACEA C5
Plug-in hybrid vehicles with a diesel engine: MB-Freigabe or MB-Approval 229.51 or ACEA C5

Not for plug-in hybrid:

ENGINE OIL FILLING QUANTITY

Model	Filling quantity
E 450 4MATIC	8.0 l
E 450 d 4MATIC	8.5 litres
All other models	6.0 l

The specified filling quantity refers to an oil change, including the oil filter.

Plug-in hybrid:

ENGINE OIL FILLING QUANTITY (PLUG-IN HYBRID)

Model	Filling quantity
E 300 de with EQ hybrid technology E 300 de 4MATIC with EQ hybrid technology	6.0 l
All other models	5.3 litres

The specified filling quantity refers to an oil change, including the oil filter.

ENGINE OIL QUALITY AND FILLING QUANTITY (MERCEDES-AMG VEHICLES)

ENGINE OIL SPECIFICATION

Saloon and Estate	MB-Freigabe or MB-Approval
Mercedes-AMG E 53 Hybrid 4MATIC+	229.51, 229.52*

* Recommended for the lowest possible fuel consumption (lowest SAE viscosity class in each case; observe possible restrictions of the approved SAE viscosity classes).

Only use engine oils of viscosity class SAE 0W-40 or SAE 5W-40.

If the engine oils listed in the table are not available, you may top up with a maximum of 1.0 litre of engine oils with MB-Freigabe or MB-Approval 229.51, 229.52, 229.61 or ACEA C5 once only.

ENGINE OIL FILLING QUANTITY

Saloon and Estate	Filling quantity
Mercedes-AMG E 53 Hybrid 4MATIC+	7.3 litres

The specified filling quantity refers to an oil change, including the oil filter.

Notes on brake fluid

Observe the notes on operating fluids (⟶ page 862).

WARNING
Risk of an accident due to vapour pockets forming in the brake system

The brake fluid constantly absorbs moisture from the air. This lowers the boiling point of the brake fluid. If the boiling point is too low, vapour pockets may form in the brake system when the brakes are applied hard.

This impairs the braking effect.

► Have the brake fluid renewed at the specified intervals.

Have the brake fluid regularly replaced at a qualified specialist workshop. Only use a brake fluid approved by Mercedes-Benz in accordance with MB-Freigabe or MB-Approval 331.0.

Coolant

NOTES ON COOLANT
Observe the notes on operating fluids (⟶ page 862).

WARNING
Risk of fire- and injury from antifreeze

If antifreeze comes into contact with hot component parts in the engine compartment, it may ignite.

► Allow the engine to cool down before you top up the anti-freeze.

► Make sure that no antifreeze spills out next to the filler opening.

► Thoroughly clean the antifreeze from component parts before starting the vehicle.

NOTE
Damage caused by incorrect coolant

► Only use coolant that has been premixed with the required antifreeze protection.

INFORMATION ON COOLANT IS AVAILABLE AT THE FOLLOWING LOCATIONS:

- In the Mercedes-Benz Specification for Operating Fluids 320.1
  - At https://operatingfluids.mercedes-benz.com
- At a qualified specialist workshop

NOTE
Overheating at high outside temperatures

If an inappropriate coolant is used, the cooling system is not sufficiently protected against overheating and corrosion at high outside temperatures.

- ► Only use coolant approved for Mercedes-Benz.
- ► Observe the instructions in the Mercedes-Benz Specifications for Operating Fluids 320.1.

Have the coolant regularly replaced at a qualified specialist workshop.

PROPORTION OF ANTIFREEZE CONCENTRATE IN THE COOLING SYSTEM:

- A minimum of 50% (antifreeze protection down to about -37°C)
- A maximum of 55% (antifreeze protection down to -45°C)

Notes on windscreen washer fluid

Observe the notes on operating fluids (⟶ page 862).

WARNING
- Risk of fire and injury due to windscreen washer concentrate

Windscreen washer concentrate is highly flammable. It could ignite if it comes into contact with hot engine component parts or the exhaust system.

- ► Make sure that no windscreen washer concentrate spills out next to the filler opening.

NOTE
Damage to the exterior lighting due to unsuitable windscreen washer fluid

Unsuitable windscreen washer fluids may damage the plastic surface of the exterior lighting.

- ► Only use windscreen washer fluids which are also suitable for use on plastic surfaces, e.g. MB SummerFit or MB WinterFit.

NOTE
Blocked spray nozzles caused by mixing windscreen washer fluids

- ► Do not mix MB SummerFit and MB WinterFit with other windscreen washer fluids.

Do not use distilled or de-ionised water. Otherwise, the fill level sensor may be actuated incorrectly.

RECOMMENDED WINDSCREEN WASHER FLUID:

- above freezing point:MB SummerFit, for example
- below freezing point:MB WinterFit, for example

For the correct mixing ratio, refer to the information on the antifreeze container.

Mix washer fluid with windscreen washer fluid all year round.

Refrigerant

NOTES ON REFRIGERANT
The climate control system contains fluorinated greenhouse gases.

Observe the notes on operating fluids (⟶ page 862).

Only for EU and EFTA countries according to EU Directive 573/2024:

> **NOTE**
> Damage due to incorrect refrigerant
>
> If a non-approved refrigerant is used, the climate control system may be damaged.
>
> ► Use only R-1234yf refrigerant.

Work on the climate control system may only be carried out at a qualified specialist workshop. Ensure that all applicable specifications are observed in this regard.

The information label for the climate control system is located inside the bonnet or at the front of the engine compartment.

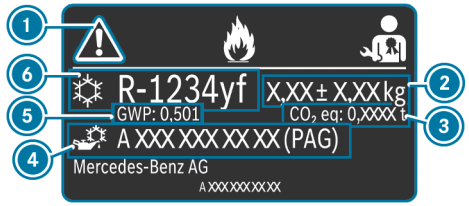

Information label (example - EU countries only)
① Hazard and service warning symbols
② Refrigerant filling quantity
③ CO_2 equivalent of the refrigerant used
④ PAG oil part number
⑤ GWP value (Global Warming Potential) of the refrigerant used
⑥ Refrigerant type

THE SYMBOLS ① INDICATE THE FOLLOWING:

- Potential dangers
- Servicing work to be carried out at a qualified specialist workshop

INFORMATION ON REFRIGERANT
Only for EU and EFTA countries according to EU Directive 573/2024:

REFRIGERANT DATA

Refrigerant filling quantity	CO_2 equivalent*
0.5 - 2.0 ± 0.01 kg	0.0003 - 0.0010 t

*The CO_2 equivalent is calculated based on the filling quantity using the following formula: CO_2 equivalent (t) = Refrigerant filling quantity × GWP/1000.

> ⓘ The filling quantity applicable to the vehicle depends on the respective equipment. The filling quantity for your vehicle can be obtained from the information label for the climate control system on the inside of the bonnet.

Vehicle data

Vehicle dimensions

THE HEIGHTS SPECIFIED MAY VARY AS A RESULT OF THE FOLLOWING FACTORS:

- Tyres
- Load
- Condition of the suspension
- Special equipment

Not for plug-in hybrid:

VEHICLE DIMENSIONS

All models	
Vehicle length	4949 mm
Vehicle width including outside mirrors	2065 mm
Vehicle width excluding outside mirrors	1880 mm
Wheelbase	2961 mm

VEHICLE HEIGHT

Model	Vehicle height
E 180 E 200 E 200 d E 220 d	1468 mm
All other models	1469 mm

Plug-in hybrid:

VEHICLE DIMENSIONS (PLUG-IN HYBRID)

All models	
Vehicle length	4949 mm
Vehicle width including outside mirrors	2065 mm
Vehicle width excluding outside mirrors	1880 mm
Vehicle height	1480 mm
Wheelbase	2961 mm

Vehicle dimensions (Mercedes-AMG vehicles)

THE HEIGHTS SPECIFIED MAY VARY AS A RESULT OF THE FOLLOWING FACTORS:

- Tyres
- Load
- Condition of the suspension
- Special equipment

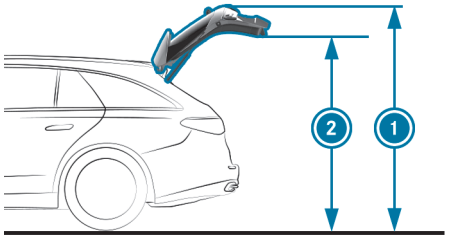

Estate model only

① Height when open

② Headroom

HEIGHT WHEN OPEN AND HEADROOM

Estate	Height when open	Headroom
Mercedes-AMG E 53 Hybrid 4MATIC+	2089 mm	1933 mm

VEHICLE HEIGHT

Model	Vehicle height
Mercedes-AMG E 53 Hybrid 4MATIC+ (Saloon)	1472 mm
Mercedes-AMG E 53 Hybrid 4MATIC+ (Estate)	1483 mm

VEHICLE DIMENSIONS

Saloon and Estate Mercedes-AMG E 53 Hybrid 4MATIC+	Vehicle dimensions
Vehicle length	4961 mm
Vehicle width including outside mirrors	2065 mm
Vehicle width excluding outside mirrors	1902 mm
Wheelbase	2971 mm

Weights and loads

PLEASE OBSERVE THE FOLLOWING NOTES FOR THE SPECIFIED VEHICLE DATA:

- Items of special equipment increase the kerb weight and reduce the payload.
- You will find vehicle-specific weight information on the vehicle identification plate (⟶ page 860).

Not for plug-in hybrid:

ROOF LOAD

Model	Maximum roof load
All models	100 kg

Plug-in hybrid:

ROOF LOAD (PLUG-IN HYBRID)

Model	Maximum roof load
All models	100 kg

Weights and loads (Mercedes-AMG vehicles)

PLEASE OBSERVE THE FOLLOWING NOTES FOR THE SPECIFIED VEHICLE DATA:

- Items of special equipment increase the kerb weight and reduce the payload.
- You will find vehicle-specific weight information on the vehicle identification plate (⟶ page 860).

ROOF LOAD

Saloon and Estate	Maximum roof load
Mercedes-AMG E 53 Hybrid 4MATIC+	100 kg

Maximum design speeds

The maximum design speed can differ from the stated figures in practice. It depends on the operating conditions, the optional equipment and the size of the tyres.

Missing values were not yet available at the time of going to press.

MAXIMUM DESIGN SPEED

Model
All models

Maximum design speeds (Mercedes-AMG vehicles)

The following values only apply to vehicles with the AMG Driver's Package.

The maximum design speed can differ from the stated figures in practice. It depends on the operating conditions, the special equipment and the size of the tyres.

Missing values were not available by the editorial deadline.

MAXIMUM DESIGN SPEED

Saloon and Estate
Mercedes-AMG E 53 Hybrid 4MATIC+

High-voltage battery (plug-in hybrid)

NOTES ON THE ENERGY SUPPLY FOR VEHICLES WITH HIGH-VOLTAGE BATTERY

In accordance with European standard EN 17186:2019, vehicle labels are located on the vehicle in the following places:

- On the inside of the socket flap
- On the charging cable connector

In addition, charging stations in European countries are equipped with energy supply identifiers. You can recharge your vehicle at charging stations whose charging station identifier corresponds to the vehicle identifier.

For further information on charging the high-voltage battery, refer to the "Charging the high-voltage battery" section (⟶ page 375).



1. Supply type: AC
   Standard: EN 62196-2
   Design: type 2
   Plug type: charging cable socket and vehicle plug
   Voltage range: 480 V RMS
2. Supply type: DC
   Standard: EN 62196-3
   Design: FF
   Plug type: charging cable socket and vehicle plug
   Voltage range: 50 V to 500 V
3. Supply type: DC
   Standard: EN 62196-3
   Design: FF
   Plug type: charging cable socket and vehicle plug
   Voltage range: 200 V to 920 V

Missing values were not yet available by the editorial deadline.

ENERGY CONTENT AND CHARGING TIMES (E 350 E WITH EQ HYBRID TECHNOLOGY)

E 350 e with EQ hybrid technology	
Type	Lithium-ion
Usable energy content	
Purely electric range	
Charging time – mode 4 with maximum 55 kW charging power	Approx. 20 min
Charging time – mode 3 with 11 kW charging power	Approx. 2 h
Charging time – mode 2 with 1.8 kW charging power	Approx. 13 h

ENERGY CONTENT AND CHARGING TIMES (ALL OTHER MODELS)

All other models	
Type	Lithium-ion
Usable energy content	
Purely electric range	
Charging time – mode 4 with maximum 55 kW charging power	Approx. 20 min
Charging time – mode 3 with 11 kW charging power	Approx. 2 h
Charging time – mode 3 with 7.4 kW charging capacity	Approx. 3 h

All other models	
Charging time – mode 2 with 3.7 kW charging power	Approx. 6 h
Charging time – mode 2 with 1.8 kW charging power	Approx. 13 h

*** MERCEDES-BENZ RECOMMENDS A MINIMUM CHARGING POWER OF 1.4 KW/PHASE FOR RELIABLE CHARGING. THE FOLLOWING IS RECOMMENDED FOR EFFICIENT CHARGING:**

- When charging at the socket (mode 2), always use the maximum possible charging power.
- When charging at the wallbox or charging station (mode 3), a minimum charging power of 1.8 kW/phase.

Mode 2 and mode 3 charging times – apply to AC charging from 0 % to 100 % of the usable energy content. Mode 4 charging time – applies to DC charging from 10 % to 80 % of the usable energy content.

The time it takes to charge the battery depends on the state of health of the battery, the ambient temperature and the charging power of the battery. The charging power, in turn, depends on the supply voltage, the current and the type of power supply.

The rated voltage range for your vehicle can be found on the information label in the socket flap (⟶ page 375).

High-voltage battery (Mercedes-AMG hybrid)

NOTES ON THE ENERGY SUPPLY FOR VEHICLES WITH HIGH-VOLTAGE BATTERY

In accordance with European standard EN 17186:2019, vehicle labels are located on the vehicle in the following places:

- On the inside of the socket flap
- On the charging cable connector

In addition, charging stations in European countries are equipped with energy supply identifiers. You can recharge your vehicle at charging stations whose charging station identifier corresponds to the vehicle identifier.

For further information on charging the high-voltage battery, refer to the "Charging the high-voltage battery" section (⟶ page 375).

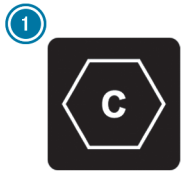

1 Supply type: AC
Standard: EN 62196-2
Design: type 2
Plug type: charging cable socket and vehicle plug
Voltage range: 480 V RMS

You can find information on the range in all-electric mode on the driver display (⟶ page 398).

Missing values were not yet available by the editorial deadline.

ENERGY CONTENT AND CHARGING TIMES

Saloon and Estate Mercedes-AMG E 53 Hybrid 4MATIC+	
Type	Lithium-ion
Usable energy content	
Purely electric range	
Charging time – mode 2* with 1.8 kW charging capacity	Approx. 16 h 30 min
Charging time – mode 2* with 3.7 kW charging capacity	Approx. 7 h
Charging time – mode 3* with 7.4 kW charging capacity	Approx. 3 h 30 min
Charging time – mode 3* with 11 kW charging capacity	Approx. 2 h 15 min
Charging time – mode 4 with 60 kW charging capacity	Approx. 20 min

*** MERCEDES-BENZ RECOMMENDS A MINIMUM CHARGING POWER OF 1.4 KW/PHASE FOR RELIABLE CHARGING. THE FOLLOWING IS RECOMMENDED FOR EFFICIENT CHARGING:**

- When charging at the socket (mode 2), always use the maximum possible charging power.
- When charging at the wallbox or charging station (mode 3), a minimum charging power of 1.8 kW/phase.

Mode 2 and 3 charging times – apply to AC charging from 0 % to 100 % of the usable energy content. Mode 4 charging time – applies to DC charging from 10 % to 80 % of the usable energy content.

The time it takes to charge the battery depends on the state of health of the battery, the ambient temperature and the charging power of the battery. The charging power, in turn, depends on the supply voltage, the current and the type of power supply.

The rated voltage range for your vehicle can be found on the information label in the socket flap.

Trailer hitch

General notes on the trailer coupling

Modifications to the cooling system may be necessary, depending on the vehicle model. The retrofitting of a trailer hitch is only permissible if a towing capacity is specified in your vehicle documents.

Further information can be obtained at a qualified specialist workshop.

Mounting dimensions

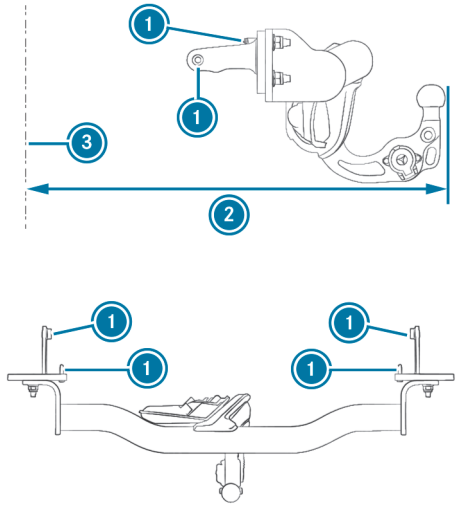

1 Attachment points
2 Overhang dimension
3 Rear-axle centre line

The overhang dimension and attachment points are valid for a trailer hitch installed at the factory.

Missing values were not yet available by the editorial deadline.

Not for plug-in hybrid:

OVERHANG DIMENSION, LENGTH

Model	Overhang dimension
E 180	
All other models	1245 mm

Plug-in hybrid:

OVERHANG DIMENSION, LENGTH (PLUG-IN HYBRID)

Model	Overhang dimension
All models	1245 mm

Trailer load

The tongue weight is not included in the trailer load.
The values for the **trailer load, braked** apply with a minimum start-off gradeability of 12 %.

Missing values were not yet available by the editorial deadline.

Not for plug-in hybrid:

TRAILER LOAD, BRAKED

Model	
E 180	
All other models	2100 kg

TRAILER LOAD, UNBRAKED

Model	
E 180	
All other models	750 kg

Plug-in hybrid:

TRAILER LOAD, BRAKED (PLUG-IN HYBRID)

Model	
E 350 e with EQ hybrid technology	
All other models	2100 kg

TRAILER LOAD, UNBRAKED (PLUG-IN HYBRID)

Model	
E 350 e with EQ hybrid technology	
All other models	750 kg

Trailer load (Mercedes-AMG vehicles)

The tongue weight is not included in the trailer load.
The values for the **trailer load, braked** apply with a minimum start-off gradeability of 12 %.

TRAILER LOAD, BRAKED

Saloon and Estate	
Mercedes-AMG E 53 Hybrid 4MATIC+	2100 kg

TRAILER LOAD, UNBRAKED

Saloon and Estate	
Mercedes-AMG E 53 Hybrid 4MATIC+	750 kg

Maximum tongue weight and load capacity

NOTE
Damage caused by the trailer coming loose

If the tongue weight used is too low, the trailer may come loose.

- The tongue weight must not be below 50 kg.
- Use a tongue weight that is as close as possible to the maximum permissible tongue weight.

NOTE
Damage caused by the bicycle rack coming loose

When using a bicycle rack, both the maximal tongue weight and the maximal load capacity should be observed.

- Do not exceed the permissible load capacity.

Observe the additional notes on the maximum load capacity (⟶ page 511).

Missing values were not yet available by the editorial deadline.

Not for plug-in hybrid:

TONGUE WEIGHT

Model	Maximum tongue weight
E 180	
All other models	84 kg

LOAD CAPACITY

All models	Maximum load capacity
When attaching the bicycle rack to the ball head	75 kg
When attaching the bicycle rack to the ball head and additionally to the guide pin	100 kg

Plug-in hybrid:

TONGUE WEIGHT (PLUG-IN HYBRID)

Model	Maximum tongue weight
E 350 e with EQ hybrid technology	
All other models	84 kg

LOAD CAPACITY (PLUG-IN HYBRID)

All models	Maximum load capacity
When attaching the bicycle rack to the ball head	75 kg
When attaching the bicycle rack to the ball head and additionally to the guide pin	100 kg

Maximum tongue weight and load capacity (Mercedes-AMG vehicles)

OBSERVE THE INFORMATION:

- On the maximum tongue weight and load capacity (→ page 884).

TONGUE WEIGHT

Saloon and Estate	Maximum tongue weight
Mercedes-AMG E 53 Hybrid 4MATIC+	84 kg

LOAD CAPACITY

Mercedes-AMG E 53 Hybrid 4MATIC+	Maximum load capacity
When attaching the bicycle rack to the ball head	75 kg
When attaching the bicycle rack to the ball head and additionally to the guide pin	100 kg

Permissible rear axle load (trailer operation)

Missing values were not yet available by the editorial deadline.

Not for plug-in hybrid:

TRAILER OPERATION AXLE LOAD

Model	Axle load
E 180 E 300	
E 200	1450 kg
E 200 4MATIC	1455 kg
E 450 4MATIC	1470 kg
E 450 d 4MATIC	1510 kg
All other models	1490 kg

Plug-in hybrid:

TRAILER OPERATION AXLE LOAD (PLUG-IN HYBRID)

Model	Axle load
E 350 e with EQ hybrid technology	
All other models	1720 kg

Permissible axle load, rear axle (Mercedes-AMG vehicles)

TRAILER OPERATION AXLE LOAD

Model	Axle load
Mercedes-AMG E 53 Hybrid 4MATIC+ (Saloon)	1770 kg
Mercedes-AMG E 53 Hybrid 4MATIC+ (Estate)	1825 kg

Back to Contents

Display messages and warning/indicator lamps

This interactive PDF works like a website – tap or click a button to jump straight to where you want to go.
You can return here at any time via the navigation bar at the top left.

Display messages
Warning and indicator lamps

Display messages

Introduction

INFORMATION REGARDING DISPLAY MESSAGES
Display messages appear on the driver display.

Display messages shown as a graphic are simplified in the Owner's Manual and may differ from the symbols on the driver display. The driver display shows high-priority display messages in red. Certain display messages will be accompanied by a warning tone.

Follow the notifications in the display messages and observe the additional information in this Owner's Manual.

SYMBOLS WILL ALSO BE SHOWN WITH SOME DISPLAY MESSAGES:

- ⓘ Further information
- × Hide display message

You can select the respective symbol by swiping left or right on the left-hand Touch Control. Press ⓘ to display further information on the central display. Press × to hide the display message.

You can hide pending display messages by pressing the back button ↩ or via the left-hand Touch Control. The display messages will then be stored in the message memory.

Rectify the cause of a display message as quickly as possible.

High-priority display messages cannot be hidden. The driver display will show these display messages continuously until the cause of the display message has been rectified.

CALLING UP SAVED DISPLAY MESSAGES
Driver display:

→ Service

The Message memory message appears on the driver display.

- Scroll through the display messages by swiping upwards or downwards on the left-hand Touch Control.
- **To exit the display:** press the back button ↩ .

Occupant safety

Display messages	Possible causes/consequences and ▶ Solutions
 Restraint system malfunction Consult workshop	* The restraint system is malfunctioning (⟶ page 144).

WARNING
Risk of injury due to malfunctions in the restraint system

Components in the restraint system may be activated unintentionally or not deploy as intended in an accident.

► Have the restraint system checked and repaired immediately at a qualified specialist workshop.

Plug-in hybrid:

DANGER
Risk of fatal injuries due to restraint system malfunctions

Components in the restraint system may be activated unintentionally or not deploy as planned in an accident. In the event of an accident, the high-voltage on-board electrical system may not be deactivated as intended.

You may suffer an electric shock if you touch the damaged components of the high-voltage on-board electrical system.

► Have the restraint system checked and repaired immediately at a qualified specialist workshop.

► After an accident, switch off the vehicle immediately.

DETECTION OF A RESTRAINT SYSTEM FAULT:

- The restraint system warning lamp does not light up when the vehicle is switched on.
- The restraint system warning lamp lights up continuously or repeatedly during a journey.

Display messages	Possible causes/consequences and ▶ Solutions
	▶ Consult a qualified specialist workshop immediately.
 Front left malfunction Consult workshop	* The restraint system is malfunctioning (⟶ page 144). **⚠ WARNING** Risk of injury due to malfunctions in the restraint system Components in the restraint system may be activated unintentionally or not deploy as intended in an accident. ▶ Have the restraint system checked and repaired immediately at a qualified specialist workshop. **Plug-in hybrid:** **⚠ DANGER** Risk of fatal injuries due to restraint system malfunctions Components in the restraint system may be activated unintentionally or not deploy as planned in an accident. In the event of an accident, the high-voltage on-board electrical system may not be deactivated as intended. You may suffer an electric shock if you touch the damaged components of the high-voltage on-board electrical system. ▶ Have the restraint system checked and repaired immediately at a qualified specialist workshop. ▶ After an accident, switch off the vehicle immediately. **DETECTION OF A RESTRAINT SYSTEM FAULT:** • The restraint system warning lamp does not light up when the vehicle is switched on. • The restraint system warning lamp lights up continuously or repeatedly during a journey. ▶ Consult a qualified specialist workshop immediately.

Display messages	Possible causes/consequences and ▶ Solutions
 Front right malfunction Consult workshop	* The restraint system is malfunctioning (⟶ page 144).

WARNING
Risk of injury due to malfunctions in the restraint system

Components in the restraint system may be activated unintentionally or not deploy as intended in an accident.

- ▶ Have the restraint system checked and repaired immediately at a qualified specialist workshop.

Plug-in hybrid:

DANGER
Risk of fatal injuries due to restraint system malfunctions

Components in the restraint system may be activated unintentionally or not deploy as planned in an accident. In the event of an accident, the high-voltage on-board electrical system may not be deactivated as intended.

You may suffer an electric shock if you touch the damaged components of the high-voltage on-board electrical system.

- ▶ Have the restraint system checked and repaired immediately at a qualified specialist workshop.
- ▶ After an accident, switch off the vehicle immediately.

DETECTION OF A RESTRAINT SYSTEM FAULT:

- The restraint system warning lamp does not light up when the vehicle is switched on.
- The restraint system warning lamp lights up continuously or repeatedly during a journey.

▶ Consult a qualified specialist workshop immediately.

Display messages	Possible causes/consequences and ▶ Solutions
 Second row of seats, left Malfunction Consult workshop	* The restraint system is malfunctioning (⟶ page 144).

WARNING
Risk of injury due to malfunctions in the restraint system

Components in the restraint system may be activated unintentionally or not deploy as intended in an accident.

- ▶ Have the restraint system checked and repaired immediately at a qualified specialist workshop.

Plug-in hybrid:

DANGER
Risk of fatal injuries due to restraint system malfunctions

Components in the restraint system may be activated unintentionally or not deploy as planned in an accident. In the event of an accident, the high-voltage on-board electrical system may not be deactivated as intended.

You may suffer an electric shock if you touch the damaged components of the high-voltage on-board electrical system.

- ▶ Have the restraint system checked and repaired immediately at a qualified specialist workshop.
- ▶ After an accident, switch off the vehicle immediately.

DETECTION OF A RESTRAINT SYSTEM FAULT:

- The restraint system warning lamp does not light up when the vehicle is switched on.
- The restraint system warning lamp lights up continuously or repeatedly during a journey.

▶ Consult a qualified specialist workshop immediately.

Display messages	Possible causes/consequences and ▶ Solutions
 Second row of seats, centre Malfunction Consult workshop	* The restraint system is malfunctioning (⟶ page 144).

WARNING
Risk of injury due to malfunctions in the restraint system

Components in the restraint system may be activated unintentionally or not deploy as intended in an accident.

- ▶ Have the restraint system checked and repaired immediately at a qualified specialist workshop.

Plug-in hybrid:

DANGER
Risk of fatal injuries due to restraint system malfunctions

Components in the restraint system may be activated unintentionally or not deploy as planned in an accident. In the event of an accident, the high-voltage on-board electrical system may not be deactivated as intended.

You may suffer an electric shock if you touch the damaged components of the high-voltage on-board electrical system.

- ▶ Have the restraint system checked and repaired immediately at a qualified specialist workshop.
- ▶ After an accident, switch off the vehicle immediately.

DETECTION OF A RESTRAINT SYSTEM FAULT:

- The restraint system warning lamp does not light up when the vehicle is switched on
- The restraint system warning lamp lights up continuously or repeatedly during a journey

▶ Consult a qualified specialist workshop immediately.

Display messages	Possible causes/consequences and ▶ Solutions
 Second row of seats, right Malfunction Consult workshop	* The restraint system is malfunctioning (⟶ page 144).

WARNING
Risk of injury due to malfunctions in the restraint system

Components in the restraint system may be activated unintentionally or not deploy as intended in an accident.

- ▶ Have the restraint system checked and repaired immediately at a qualified specialist workshop.

Plug-in hybrid:

DANGER
Risk of fatal injuries due to restraint system malfunctions

Components in the restraint system may be activated unintentionally or not deploy as planned in an accident. In the event of an accident, the high-voltage on-board electrical system may not be deactivated as intended.

You may suffer an electric shock if you touch the damaged components of the high-voltage on-board electrical system.

- ▶ Have the restraint system checked and repaired immediately at a qualified specialist workshop.
- ▶ After an accident, switch off the vehicle immediately.

DETECTION OF A RESTRAINT SYSTEM FAULT:

- The restraint system warning lamp does not light up when the vehicle is switched on.
- The restraint system warning lamp lights up continuously or repeatedly during a journey.

▶ Consult a qualified specialist workshop immediately.

Display messages	Possible causes/consequences and ▶ Solutions
 Left window airbag malfunction Consult workshop	* The restraint system is malfunctioning (⟶ page 144). **WARNING** Risk of injury or fatal injury due to a malfunction in the windowbag The windowbag might be triggered unintentionally or might not be triggered at all in the event of an accident. ► Have the windowbag checked and repaired immediately at a qualified specialist workshop. ▶ Consult a qualified specialist workshop immediately.
 Right window airbag malfunction Consult workshop	* The restraint system is malfunctioning (⟶ page 144). **WARNING** Risk of injury or fatal injury due to a malfunction in the windowbag The windowbag might be triggered unintentionally or might not be triggered at all in the event of an accident. ► Have the windowbag checked and repaired immediately at a qualified specialist workshop. ▶ Consult a qualified specialist workshop immediately.
Front passenger airbag disabled See Owner's Manual	* The front passenger airbag and the front passenger knee airbag have been disabled even though an adult, or an individual of adult build is occupying the front passenger seat. If additional forces are applied to the seat, the weight the system detects may be too low.

Display messages	Possible causes/consequences and ▶ Solutions
	WARNING Risk of injury- or fatalities if the front passenger airbag is deactivated If the front passenger airbag is deactivated, it will not be released in the event of an accident and can not therefore provide the protection for which it is designed. An occupant on the front passenger seat may then collide with parts of the vehicle interior, forexample, in particular if they are sitting too close to the cockpit. ► Ensure correct status of the front passenger airbag both prior to and during the journey. ▶ Stop the vehicle immediately in accordance with the traffic conditions. ▶ Ensure that no objects are trapped under the front passenger seat. ▶ Check the status of automatic front passenger airbag shutoff (⟶ page 146). ▶ If necessary, consult a qualified specialist workshop immediately.
Front passenger airbag enabled See Owner's Manual	* **THE FRONT PASSENGER AIRBAG AND THE FRONT PASSENGER KNEE AIRBAG WILL BE ENABLED WHILE THE VEHICLE IS IN MOTION DESPITE THE FOLLOWING:** • A child, a small adult or an object weighing less than the system weight threshold is located on the front passenger seat. • The front passenger seat is not occupied. The system may detect objects or forces that are adding to the weight applied to the seat.

Display messages	Possible causes/consequences and ▶ Solutions
	WARNING Risk of injury or death when using a child restraint system while the front passenger airbag is enabled If you secure a child in a child restraint system on the front passenger seat and the front passenger airbag is enabled, the front passenger airbag can deploy in the event of an accident. The child could be struck by the airbag. ▶ Ensure, both before and during the journey, that the status of the front passenger airbag is correct. NEVER use a rearward facing child restraint on a seat protected by an ACTIVE AIRBAG in front of it, DEATH or SERIOUS INJURY to the CHILD can occur. ▶ Stop the vehicle immediately in accordance with the traffic conditions. ▶ Ensure that no objects are trapped under the front passenger seat. ▶ Check the status of automatic front passenger airbag shutoff (⟶ page 146). ▶ If necessary, consult a qualified specialist workshop immediately.
Occupant presence reminder inoperative	* The passive occupant presence reminder is faulty. ▶ Consult a qualified specialist workshop.
 Do not leave persons or animals in the vehicle	* The passive occupant presence reminder assumes that persons or animals are present in the rear of the vehicle. ▶ Do not leave any persons or animals in the vehicle after exiting the vehicle.

Key

Display messages	Possible causes/consequences and ▶ Solutions
 Change key batteries	* The key battery is discharged. ▶ Change the battery (⟶ page 195).
 Key not detected (white display message)	* The key is currently undetected. ▶ Change the location of the key in the vehicle. ▶ Try to start the vehicle. ▶ If the key is still not detected, place it in the slot for starting with the key (⟶ page 328). ▶ Start the vehicle.
 Key not detected (red display message)	* The key can no longer be detected during a journey and may no longer be in the vehicle. **IF THE KEY IS NO LONGER IN THE VEHICLE AND YOU SWITCH OFF THE VEHICLE:** • You will no longer be able to start the vehicle. • You will not be able to lock the vehicle centrally. ▶ Ensure that the key is in the vehicle. If the key is in the vehicle and is still not detected: ▶ Stop the vehicle immediately in accordance with the traffic conditions. ▶ Place the key in the marked space for starting the vehicle with the key (⟶ page 328). The key battery is at low capacity or is flat. ▶ Check the battery via the indicator lamp (⟶ page 192).

Display messages	Possible causes/consequences and ▶ Solutions
	▶ Replace the key battery as necessary (⟶ page 195).
 Key being taught in Please wait	* The vehicle is processing in order to teach in the new key. ▶ Wait until processing is complete.
Place the key in the marked space See Owner's Manual	* Key detection is malfunctioning. ▶ Change the location of the key in the vehicle. ▶ Place the key in the marked space for starting the vehicle with the key (⟶ page 328).
Searching for key in stowage tray or Digital Vehicle Key in inductive charging bracket... See Owner's Manual	* The key has not been detected. ▶ Place the key in the storage compartment (⟶ page 328). If the key is still not detected: ▶ Consult a qualified specialist workshop. * The Digital Vehicle Key has not been detected. ▶ Place the Digital Vehicle Key in the marked space (⟶ page 328). If the Digital Vehicle Key is still not detected: ▶ Consult a qualified specialist workshop.
 Key not detected	* The key or the Digital Vehicle Key is currently undetected. ▶ Change the location of the key or the Digital Vehicle Key in the vehicle. ▶ Try to start the vehicle. ▶ If the key is still not detected, place the key in the marked space (⟶ page 328).

Display messages	Possible causes/consequences and ▶ Solutions
	▶ If the Digital Vehicle Key is still not detected, place the Digital Vehicle Key in the marked space (⟶ page 328). ▶ Start the vehicle.
 Key not detected Place Digital Vehicle Key in inductive charging bracket	* The key or the Digital Vehicle Key is no longer detected during a journey and may no longer be in the vehicle. **IF THE KEY OR THE DIGITAL VEHICLE KEY IS NO LONGER IN THE VEHICLE AND YOU SWITCH THE VEHICLE OFF:** • You will no longer be able to start the vehicle. • You will not be able to lock the vehicle centrally. ▶ Ensure that the key or the Digital Vehicle Key is in the vehicle. If the key or the Digital Vehicle Key is in the vehicle and is still not detected: ▶ Stop the vehicle immediately in accordance with the traffic conditions. ▶ Place the key in the storage compartment (⟶ page 328). ▶ Place the Digital Vehicle Key in the marked space (⟶ page 328). The key battery is at low capacity or is flat. ▶ Check the battery via the indicator lamp (⟶ page 192). ▶ Replace the key battery as necessary (⟶ page 195). The state of charge for the rechargeable battery of the end device with the Digital Vehicle Key is too low. ▶ Immediately charge the rechargeable battery of the Digital Vehicle Key end device. Otherwise, it may not be possible to restart the vehicle after it has been switched off. If the key or the Digital Vehicle Key is still not detected:

Display messages	Possible causes/consequences and ▶ Solutions
	▶ Consult a qualified specialist workshop.
 Replace key See Owner's Manual	* If the Digital Vehicle Key is not renewed, the vehicle cannot be unlocked/locked or started. ▶ The system will automatically restore the Digital Vehicle Key. When restoral is complete, the message disappears and the Digital Vehicle Key will be available once again.
 Do not forget key	* A warning tone will also sound. This message reminds you to take your key with you when you leave the vehicle. This also applies to the Digital Vehicle Key.
 Digital Vehicle Key Charge device	* The state of charge for the rechargeable battery of the end device with the Digital Vehicle Key is too low. ▶ Immediately charge the rechargeable battery of the Digital Vehicle Key end device.
 Key being taught in Please wait	* The vehicle is processing in order to teach in the new Digital Vehicle Key. ▶ Wait until processing is complete.
 Key does not belong to vehicle	* The vehicle cannot be unlocked/locked or started. ▶ Use the Digital Vehicle Key belonging to the vehicle.
 Replace key	* Have the key replaced. ▶ Consult a qualified specialist workshop.

Lights

Display messages	Possible causes/consequences and ▶ Solutions
 Malfunction See Owner's Manual	* The exterior lighting is malfunctioning. ▶ Consult a qualified specialist workshop. * **Vehicles with a trailer hitch:** a fuse may have blown. ▶ Stop the vehicle in accordance with the traffic conditions. ▶ Check the fuses and replace them if necessary (⟶ page 73).
 Automatic driving lights inoperative	* The light sensor for automatic driving lights is malfunctioning. ▶ Consult a qualified specialist workshop.
 Switch on headlamps	* You are driving without low beam headlamps. ▶ Turn the light switch to the ≡D or AUTO position.
 Switch off lights	* You are leaving the vehicle and the lights are still switched on. ▶ Turn the light switch to the AUTO position.
DIGITAL LIGHT Functions limited	* The DIGITAL LIGHT system is malfunctioning. The lighting system will continue to work even without the functions of the DIGITAL LIGHT system. ▶ Consult a qualified specialist workshop.
Check low beam setting (left/right-side traffic)	* The type of traffic has been selected manually. ▶ Check the setting and change it manually if necessary (⟶ page 290).
Low beam setting (left/right-side traffic) Manual adjustment only	* The automatic headlamp conversion for left-hand/right-hand traffic has malfunctioned.

Display messages	Possible causes/consequences and ▶ Solutions
	▶ Change the headlamps over manually (⟶ page 290).
Adaptive Highbeam Assist Plus currently unavailable See Owner's Manual	* Adaptive Highbeam Assist Plus is temporarily unavailable. The system limits have been reached (⟶ page 288). The system will become available again when the cause of the problem is rectified. The Adaptive Highbeam Assist Plus available again display message will appear. ▶ Continue driving. ▶ Operate the high beam manually until Adaptive Highbeam Assist Plus is available again.
Adaptive Highbeam Assist Plus inoperative	* Adaptive Highbeam Assist Plus is malfunctioning. ▶ Continue driving. or ▶ Stop the vehicle in accordance with the traffic conditions and restart the vehicle. ▶ If the display message does not disappear, consult a qualified specialist workshop. ▶ Until then, operate the high beam manually.
Adaptive Highbeam Assist currently unavailable See Owner's Manual	* Adaptive Highbeam Assist is temporarily unavailable. The system limits have been reached (⟶ page 286). The system will become available again when the cause of the problem is rectified. The Adaptive Highbeam Assist available again display message will appear. ▶ Continue driving. ▶ Operate the main beam manually until Adaptive Highbeam Assist becomes available once again.
Adaptive Highbeam Assist inoperative	* Adaptive Highbeam Assist is malfunctioning. ▶ Continue driving. or ▶ Stop the vehicle in accordance with the traffic conditions and restart the vehicle.

Display messages	Possible causes/consequences and ▶ Solutions
	▶ If the display message does not disappear, consult a qualified specialist workshop. ▶ Until then, operate the high beam manually.
 Front left parking lights	* The front left parking light is malfunctioning. ▶ Consult a qualified specialist workshop.
 Front right parking lights	* The front right parking light is malfunctioning. ▶ Consult a qualified specialist workshop.
 Left low beam	* The left low beam is malfunctioning. ▶ Consult a qualified specialist workshop.
 Right low beam	* The right low beam is malfunctioning. ▶ Consult a qualified specialist workshop.
 Left cornering light	* The left cornering light is malfunctioning. ▶ Consult a qualified specialist workshop.
 Right cornering light	* The right cornering light is malfunctioning. ▶ Consult a qualified specialist workshop.

Display messages	Possible causes/consequences and ▶ Solutions
 Left tail light	* The left tail light is malfunctioning. ▶ Consult a qualified specialist workshop.
 Right tail light	* The right tail light is malfunctioning. ▶ Consult a qualified specialist workshop.
 Left main beam	* The left high beam is malfunctioning. ▶ Consult a qualified specialist workshop.
 Right main beam	* The right high beam is malfunctioning. ▶ Consult a qualified specialist workshop.
 Left daytime running lights	* The left daytime running lights are malfunctioning. ▶ Consult a qualified specialist workshop.
 Right daytime running lights	* The right-hand daytime running lights are malfunctioning. ▶ Consult a qualified specialist workshop.
 Front left turn signal	* The front left turn signal lamp is malfunctioning. ▶ Consult a qualified specialist workshop.

Display messages	Possible causes/consequences and ▶ Solutions
 Rear left turn signal	* The rear left turn signal lamp is malfunctioning. ▶ Consult a qualified specialist workshop.
 Front right turn signal	* The front right turn signal lamp is malfunctioning. ▶ Consult a qualified specialist workshop.
 Rear right turn signal	* The rear right turn signal lamp is malfunctioning. ▶ Consult a qualified specialist workshop.
 Left mirror turn signal	* The turn signal lamp on the left mirror is malfunctioning. ▶ Consult a qualified specialist workshop.
 Right mirror turn signal	* The turn signal lamp on the right mirror is malfunctioning. ▶ Consult a qualified specialist workshop.
 Left brake lamp	* The left brake light is malfunctioning. ▶ Consult a qualified specialist workshop.
 Right brake lamp	* The right brake light is malfunctioning. ▶ Consult a qualified specialist workshop.

Display messages	Possible causes/consequences and ▶ Solutions
 Third brake lamp	* The third brake light is malfunctioning. ▶ Consult a qualified specialist workshop.
 Reversing light	* The reversing light is malfunctioning. ▶ Consult a qualified specialist workshop.
 Rear fog light	* The rear fog light is malfunctioning. ▶ Consult a qualified specialist workshop.
 Number plate lamp	* The number plate lamp is malfunctioning. ▶ Consult a qualified specialist workshop.
 Trailer left turn signal	* The left turn signal lamp on the trailer is malfunctioning. ▶ Consult a qualified specialist workshop.
 Trailer right turn signal	* The right turn signal lamp on the trailer is malfunctioning. ▶ Consult a qualified specialist workshop.
 Trailer brake lamp	* The brake light on the trailer is malfunctioning. ▶ Consult a qualified specialist workshop.

Display messages	Possible causes/consequences and ▶ Solutions
 Trailer tail light	* A tail light on the trailer is malfunctioning. ▶ Consult a qualified specialist workshop.
Hazard warning lamp system Malfunction	* The hazard warning switch is malfunctioning. ▶ Consult a qualified specialist workshop.
Inoperative indicator lamp in driver display. Consult workshop	* An indicator lamp on the driver display is defective. ▶ Consult a qualified specialist workshop.

Climate control

Display messages	Possible causes/consequences and ▶ Solutions
 inoperative See Owner's Man. (stationary heater)	* The stationary heater is temporarily malfunctioning. ▶ With the vehicle stationary on a level surface and the engine cooled down, attempt to switch on the stationary heater up to four times, waiting several minutes between each attempt. ▶ If the stationary heater does not switch on, consult a qualified specialist workshop.
 Currently unavailable Outside temperature too high	* The stationary heater cannot be activated if the outside temperature is above 15°C.
 Currently unavailable Battery low	* The on-board electrical system voltage is too low. The stationary heater has switched itself off. ▶ Drive an extended distance until the battery has reached a sufficient charge level again.

Display messages	Possible causes/consequences and ▶ Solutions
 Currently unavailable Refuel	* There is insufficient fuel in the fuel tank. The stationary heater cannot be switched on. ▶ Refuel the vehicle.
 Currently unavailable High-voltage battery charging incomplete.	* The high-voltage battery is charging. Pre-entry climate control cannot be switched on. ▶ Wait until the charging process has achieved a minimum state of charge.
 Currently unavailable Charge high-voltage battery	* The charge of the high-voltage battery is too low. Pre-entry climate control cannot be switched on. ▶ Charging the high-voltage battery (⟶ page 375).
 Pre-entry climate control via key available again after starting vehicle	* You have attempted to switch on pre-entry climate control more than twice with the vehicle switched off. ▶ Start the vehicle for ten seconds. Pre-entry climate control is operational again.
 Pre-entry climate control via key currently unavailable. High-voltage battery low	* The charge of the high-voltage battery is too low. Pre-entry climate control cannot be switched on. ▶ Charge the high-voltage battery (⟶ page 375). Pre-entry climate control will become operational again when the high-voltage battery is sufficiently charged.

Drive system

Display messages	Possible causes/consequences and ▶ Solutions
 Towing not permitted See Owner's Manual	* The drive system is malfunctioning. ▶ Have the vehicle transported using only a transporter or trailer (⟶ page 755).
 Acoustic presence indicator inoperative	* The sound generator (acoustic vehicle alerting system) is malfunctioning. No vehicle noises are being produced. The vehicle may not be heard by other road users. ▶ Drive with utmost caution. ▶ Consult a qualified specialist workshop.
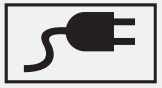 Charger cable connected	* You cannot pull away while the charging cable is connected. ▶ Disconnect the charging cable from the vehicle.
Not possible to unlock charging cable See Owner's Manual	* The charging cable connector cannot be removed from the vehicle socket. ▶ If the charging cable is under strain, relieve the strain on the charging cable connector by carefully pulling on the charging cable. ▶ Press the charging interruption button (⟶ page 390). If the charging cable connector cannot be subsequently removed: ▶ Consult a qualified specialist workshop.
Vehicle not currently being charged Try a different charging station	* A malfunction has occurred in the charging station or the RFID card is not recognised. ▶ Start the charging process at a different charging station. or ▶ Use an alternative authentication method or payment method.

Display messages	Possible causes/consequences and ▶ Solutions
Charging fault Please change charging method See Owner's Manual	* A temporary malfunction has occurred in the charging station. ▶ Wait until the malfunction has passed. or ▶ Start the charging process at a different charging station. or ▶ Use an alternative authentication method or payment method.
AC charging inoperative Consult workshop	* The charging process cannot be started due to a malfunction. ▶ Consult a qualified specialist workshop.
DC charging inoperative Consult workshop	* The charging process cannot be started due to a malfunction. ▶ Consult a qualified specialist workshop.
Login failed Change authentication method or charging station	* Plug-and-Charge is not expected to be available at this charging station. ▶ Use an alternative authentication method or payment method. or ▶ Start the charging process at a different charging station.
Only electric drive available Power limited	* The fuel supply is empty and the combustion engine is switched off. The output of your vehicle is limited because you are driving in electric mode. ▶ Refuel immediately. Subsequently, there may be temporary restrictions in the availability of electric mode over a distance of 50 km. If there is fuel in the vehicle, there is a fault with the combustion engine. ▶ Consult a qualified specialist workshop.

Display messages	Possible causes/consequences and ▶ Solutions
"Electric" drive program currently unavailable	* The state of charge for the high-voltage battery or the environmental conditions are not sufficient for the Electric drive program. ▶ Continue driving and observe the notes on plug-in hybrid operation (⟶ page 322). or ▶ Charge the high-voltage battery (⟶ page 375).
Reduced drive power See Owner's Manual	* The drive system switches to emergency operation mode due to a malfunction. ▶ Continue driving with caution. ▶ Consult a qualified specialist workshop.
Preparing drive system...	* The insulation of the drive system is being tested. This process can last for up to ten seconds.
 Battery overheated Stop. Everybody exit vehicle! Outdoors if possible	* **Plug-in hybrid:** The high-voltage battery is overheated. There is a risk of fire. ▶ Stop the vehicle immediately in accordance with the traffic conditions. ▶ If possible, stop the vehicle in the open air and ensure that all vehicle occupants exit the vehicle. ⓘ Supporting vehicle functions may activate automatically (e.g. the climate control's air-recirculation mode). ▶ Do not continue driving. ▶ In the event of smoke, leave the danger zone and notify the fire service immediately. ▶ Notify a qualified specialist workshop even if there are no external signs of fire.
 Malfunction	* The drive system is malfunctioning. A warning tone will also sound. ▶ Consult a qualified specialist workshop.

Display messages	Possible causes/consequences and ▶ Solutions
 Malfunction Visit workshop	* The drive system is malfunctioning. ▶ Consult a qualified specialist workshop.
 Have high-voltage system checked See Owner's Manual	* A function restriction has occurred in the drive system. ▶ Consult a qualified specialist workshop.
Consult workshop without changing the transmission position	* The transmission is malfunctioning. It is no longer possible to change the transmission position. ▶ If transmission position D is engaged, consult a qualified specialist workshop and do not change the transmission position. ▶ For all other transmission positions, park the vehicle safely. ▶ Consult a qualified specialist workshop.
Consult workshop without starting the vehicle again	* It is not possible to restart the drive system due to a malfunction. ▶ Do not switch off the drive system; continue driving to the nearest qualified specialist workshop.
 Drive power and range reduced See Owner's Manual	* A malfunction has occurred in the high-voltage battery. Output and range will be severely restricted. ▶ Switch off and lock the vehicle. ▶ After waiting for a short time, unlock the vehicle and start it again. If the display message appears again: ▶ Continue driving with caution. ▶ Fully charge the high-voltage battery (⟶ page 375).

Display messages	Possible causes/consequences and ▶ Solutions
	If the output and range are still reduced, there is a malfunction in the drive system. ▶ Continue driving with caution. ▶ Consult a qualified specialist workshop.
Cannot start vehicle See Owner's Manual	* It is not possible to start the vehicle. A malfunction has occurred in the drive system. ▶ Switch off and lock the vehicle. ▶ After waiting for a short time, unlock the vehicle and start it again. ▶ If the display message appears again and the vehicle does not start, consult a qualified specialist workshop.
Drive malfunction Achievable speed limited Stop soon	* The drive system is malfunctioning. Maximum vehicle speed is restricted. The drive system will shut off within a few kilometres. ▶ Stop the vehicle immediately in accordance with the traffic conditions and switch off the drive system. Do not continue driving. ▶ Do not tow the vehicle; stop towing if necessary. ▶ Consult a qualified specialist workshop.
Drive malfunction Achievable speed severely limited See Owner's Manual	* The drive system is malfunctioning. Maximum vehicle speed is restricted. ▶ Consult a qualified specialist workshop.
 Malfunction	* The drive system is malfunctioning. The output of your vehicle is restricted. ▶ Consult a qualified specialist workshop.

Display messages	Possible causes/consequences and ▶ Solutions
 Stop Switch off the vehicle	* The drive system is malfunctioning. ▶ Stop the vehicle immediately in accordance with the traffic conditions and switch off the drive system. Do not continue driving. ▶ Do not tow the vehicle; stop towing if necessary. ▶ Consult a qualified specialist workshop.
 Performance severely limited	* The drive system is outside the normal operating temperature range (e.g.due to extremely low or high outside temperatures). Output will be severely restricted. Once the operating temperature of the drive system returns to normal, full output will be available again. The display message will disappear. * If the drive system power output is still reduced, there is a fault in the drive system. ▶ Continue driving with caution. ▶ Consult a qualified specialist workshop.
High-voltage battery malfunction. No start in approx. XXX km Consult workshop (yellow display message)	* A malfunction has occurred in the high-voltage battery. It will no longer be possible to start the electric drive system after the distance displayed has been covered. ▶ Have the necessary maintenance work on the high-voltage battery carried out at a qualified specialist workshop.
High-voltage battery malfunction. No start in approx. XXX km Consult workshop (red display message)	* A malfunction has occurred in the high-voltage battery. It will no longer be possible to start the electric drive system after the distance displayed has been covered. ▶ Have the necessary maintenance work on the high-voltage battery carried out immediately at a qualified specialist workshop.
High-voltage battery malfunction. Consult workshop without starting the vehicle again	* A malfunction has occurred in the high-voltage battery. It will no longer be possible to restart the drive system once it has been switched off. ▶ Do not switch off the drive system; continue driving to the nearest qualified specialist workshop.

Display messages	Possible causes/consequences and ▶ Solutions
 Please wait Depressurising fuel tank	* **Vehicles with petrol engines:** the pressure in the fuel tank needs to be reduced before the fuel filler flap is opened. This pressure reduction can take up to 15 minutes.
 Fuel tank is depressurised Ready for refuelling	* **Vehicles with petrol engines:** the pressure in the fuel tank is released and the fuel filler flap opens.

Vehicle

Display messages	Possible causes/consequences and ▶ Solutions
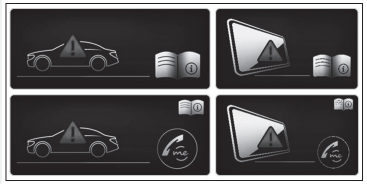	* The driver display is inoperative due to a failed software update. The display message will be shown every time the vehicle is started. **⚠ WARNING** Risk of accident if the driver's display fails If the driver's display fails or malfunctions, you may not be aware of any functional limitations to safety-critical systems. This may affect the operating safety of the vehicle. ▶ Park the vehicle safely as soon as possible and notify a qualified specialist workshop. If the operating safety of your vehicle is impaired, park the vehicle in a safe place immediately. Notify a qualified specialist workshop. If the driver display fails, you may fail to recognise e.g. function restrictions affecting systems relevant to safety or the speed display. Operating safety of the vehicle may be impaired (⟶ page 596). ▶ Have the vehicle checked by a qualified specialist workshop immediately.

Display messages	Possible causes/consequences and ▶ Solutions
Cannot start vehicle See Owner's Manual	* The vehicle cannot be started. ▶ Switch the vehicle off and then back on again. ▶ If the display message still appears, consult a qualified specialist workshop. * **Vehicles with 48 V on-board electrical system:** the state of charge for the 48 V battery is too low. You can no longer start the vehicle. ▶ Switch off electrical consumers that are not required. ▶ Connect a suitable charger approved for Mercedes-Benz with sufficient charging power to the jump-start connection point of the 12 V battery (⟶ page 71). The 48 V battery is charged via the voltage converter in the vehicle.
Vehicle is ready to drive Shutdown occurs when locked or automatically in XX mins	* You are about to leave the vehicle and the engine is running. The vehicle will switch off automatically in 20 minutes. ▶ To prevent the vehicle from switching off automatically, acknowledge the message on the central display of the multimedia system. * You are in the vehicle. Park position P is engaged and the engine is running. This display message will appear on the driver display after a certain delay time. The vehicle will then switch off automatically after an overall delay time of 20 minutes . ▶ To prevent the vehicle from switching off automatically, acknowledge the message on the central display of the multimedia system.
Vehicle is ready to drive Shutdown occurs when locked or automatically in a few minutes	* You are exiting the vehicle with vehicle traction standby established. ▶ Exit the vehicle, secure it against rolling away and take the key with you. ▶ If you do not leave the vehicle, switch off the electrical consumers (e.g. the seat heating). Otherwise, the 12-V battery may discharge and starting the engine will then only be possible with the help of a second battery (starting assistance).
 Top up washer fluid	* The washer fluid level in the washer fluid reservoir has dropped below the minimum fill level. ▶ Top up the washer fluid (⟶ page 40).
Wiper Malfunction	* The windscreen wiper is malfunctioning.

Display messages	Possible causes/consequences and ▶ Solutions
	▶ Restart the vehicle. If the display message does not disappear: ▶ Consult a qualified specialist workshop.
 Operation only possible in transmission position P	* The ball neck will not swivel because transmission position D, R or neutral N is selected. ▶ Depress the brake pedal. ▶ Engage park position P.
 Trailer coupling in motion	* The ball neck is retracting/extending. Do not attempt to speed up, slow down or initiate the swivel movement using your hand, foot or other aids or move the ball neck when it is stationary. Do not couple up a trailer during the swivel movement. When the ball neck has reached an operational position, the display message will disappear.
 Trailer coupling Check lock (white display message)	* The trailer hitch is not operational when driving with a trailer. ⚠ **WARNING** Risk of an accident if the ball neck is not locked The trailer may become detached. ▶ Stop the vehicle immediately in accordance with the traffic conditions. Do not continue driving. ▶ Uncouple the trailer and secure it against rolling away. ▶ Initiate a new swivelling procedure and do not re-couple the trailer until the display message disappears. ▶ Stop immediately in accordance with the traffic conditions and switch off the vehicle. ▶ Uncouple the trailer and secure it against rolling away.

Display messages	Possible causes/consequences and ▶ Solutions
	▶ Initiate a new swivel movement (⟶ page 57). ▶ When the display message disappears, couple up the trailer and continue driving. If the display message does not disappear, the trailer hitch is malfunctioning and the ball neck is not locked. ▶ Do not couple up the trailer. Continue driving without the trailer. Note the reduced ground clearance due to an unlocked ball neck. ▶ Consult a qualified specialist workshop. * When the vehicle is stationary with a coupled trailer, the trailer hitch is not operational. ▶ Uncouple the coupled trailer and secure it against rolling away. ▶ **If the ball neck has been retracted:** initiate a new swivel movement (⟶ page 57). The ball neck will engage vertically in the locked position and then engage beneath the bumper. ▶ **If the ball neck has been extended:** initiate a new swivel movement (⟶ page 57). The ball neck will engage beneath the bumper. If the display message does not disappear, the trailer hitch is malfunctioning and the ball neck is not locked. ▶ Do not couple up the trailer. Continue driving without the trailer. Note the reduced ground clearance due to an unlocked ball neck. ▶ Consult a qualified specialist workshop.
 Trailer coupling Check lock (red display message)	* The trailer hitch is not operational when driving with a trailer.

Display messages	Possible causes/consequences and ▶ Solutions

WARNING
Risk of an accident if the ball neck is not locked

The trailer may become detached.

- ▶ Stop the vehicle immediately in accordance with the traffic conditions. Do not continue driving.
- ▶ Uncouple the trailer and secure it against rolling away.
- ▶ Initiate a new swivelling procedure and do not re-couple the trailer until the display message disappears.

- ▶ Stop immediately in accordance with the traffic conditions and switch off the vehicle.
- ▶ Uncouple the trailer and secure it against rolling away.
- ▶ Initiate a new swivel movement (⟶ page 57).
- ▶ When the display message disappears, couple up the trailer and continue driving.

If the display message does not disappear, the trailer hitch is malfunctioning and the ball neck is not locked.

- ▶ Do not couple up the trailer. Continue driving without the trailer. Note the reduced ground clearance due to an unlocked ball neck.
- ▶ Consult a qualified specialist workshop.

* When the vehicle is stationary with a coupled trailer, the trailer hitch is not operational.

- ▶ Uncouple the coupled trailer and secure it against rolling away.
- ▶ **If the ball neck has been retracted:** initiate a new swivel movement (⟶ page 57).
  The ball neck will engage vertically in the locked position and then engage beneath the bumper.
- ▶ **If the ball neck has been extended:** initiate a new swivel movement (⟶ page 57).
  The ball neck will engage beneath the bumper.

Display messages	Possible causes/consequences and ▶ Solutions
	If the display message does not disappear, the trailer hitch is malfunctioning and the ball neck is not locked. ▶ Do not couple up the trailer. Continue driving without the trailer. Note the reduced ground clearance due to an unlocked ball neck. ▶ Consult a qualified specialist workshop.
Please teach-in trailer coupling again using button in boot. Wait for coupling to extend & retract	* The swivel movement of the trailer hitch is impaired. ▶ Press the button on the boot lid to initiate a new, complete swivel movement until the ball neck engages beneath the bumper.
Head-up display currently unavailable See Owner's Manual	* **THE HEAD-UP DISPLAY IS TEMPORARILY UNAVAILABLE. POSSIBLE CAUSES:** • Malfunctions in the power supply • Signal interference ▶ Stop in accordance with the traffic conditions and switch the vehicle off and then on again. ▶ If the display message does not disappear, consult a qualified specialist workshop.
Head-up display inoperative	* The head-up display is indicating an internal error. ▶ Consult a qualified specialist workshop.
Head-up display Brightness currently reduced See Owner's Manual	* **BRIGHTNESS OF THE HEAD-UP DISPLAY IS REDUCED. POSSIBLE CAUSES:** • Dirt on the windscreen in the camera's field of vision • Faulty exterior brightness signals ▶ Switch on the windscreen wipers. ▶ Clean the windscreen as necessary. ▶ Switch the vehicle off and then back on again. ▶ If the display message does not disappear, consult a qualified specialist workshop.

Display messages	Possible causes/consequences and ▶ Solutions
 Steering malfunction Stop immediately See Owner's Manual	* The steering is malfunctioning. Steering capability is significantly impaired. **WARNING** Risk of accident if steering capability is impaired If the steering does not function as intended, the vehicle's operating safety is jeopardised. ► Pull over and stop the vehicle safely as soon as possible, paying attention to road and traffic conditions. Do not continue driving under any circumstances. ► Consult a qualified specialist workshop. ► Stop the vehicle immediately in accordance with the traffic conditions. Do not continue driving. ► Consult a qualified specialist workshop.
 Steering malfunction Increased physical effort See Owner's Manual	* The power steering assistance is malfunctioning. **WARNING** Risk of an accident due to altered steering characteristics If the power assistance of the steering fails partially or completely, you will need to use more force to steer. ► If safe steering is possible, drive on carefully. ► Visit or consult a qualified specialist workshop immediately. ► If safe steering is possible, continue driving with caution. ► Consult or notify a qualified specialist workshop immediately.

Display messages	Possible causes/consequences and ▶ Solutions
 Steering malfunction Drive carefully Visit workshop	* A power steering malfunction has occurred. Steering characteristics may be impaired as a result. ▶ Continue driving with caution. ▶ Consult a qualified specialist workshop.
 Rear axle steering currently malfunctioning	* Rear axle steering is temporarily unavailable. The turning circle may become wider. ▶ Stop the vehicle in accordance with the traffic conditions and restart the vehicle. If the display message does not disappear: ▶ Continue driving with caution. ▶ Consult a qualified specialist workshop.
 Rear axle steering Malfunction Visit workshop	* Rear axle steering is malfunctioning. The rear axle has no steering capability. The steering wheel may be at an angle when you drive in a straight line. ▶ Adapt your speed and continue driving with caution. ▶ Consult a qualified specialist workshop immediately.
 Rear axle steering Malfunction Stop immediately	* Rear axle steering is malfunctioning. The rear axle has no steering capability. The steering wheel may be at a significant angle when you drive in a straight line. Depending on the steering wheel's angled position, the steering wheel will also vibrate and a continuous warning tone will sound.

Display messages	Possible causes/consequences and ▶ Solutions
	WARNING Risk of accident if steering capability is impaired If the steering does not function as intended, the vehicle's operating safety is jeopardised. ▶ Pull over and stop the vehicle safely as soon as possible, paying attention to road and traffic conditions. Do not continue driving under any circumstances. ▶ Consult a qualified specialist workshop.
	▶ Stop the vehicle immediately in accordance with the traffic conditions. Do not continue driving. ▶ When stopping, it should be noted that the vehicle now has a greater width. ▶ Consult a qualified specialist workshop.
Snow chain mode Maximum speed exceeded	* The maximum permissible speed for snow chain mode has been exceeded. ▶ Reduce your speed.
Active bonnet malfunction See Owner's Manual	* The active bonnet (pedestrian protection) is malfunctioning or inoperative after having already been triggered. ▶ Consult a qualified specialist workshop.
Ambient light warning support inoperative	* The ambient lighting may not provide full visual warning support. ▶ Lock the vehicle and then unlock it again after a few minutes. ▶ If the display message appears repeatedly, contact a qualified specialist workshop.
	* The bonnet is open.

Display messages	Possible causes/consequences and ▶ Solutions
	WARNING Risk of accident due to driving with the bonnet unlocked The bonnet may open and block your view. ► Never release the bonnet when driving. ► Before every trip, ensure that the engine bonnet is locked. ► Stop the vehicle immediately in accordance with the traffic conditions. ► Close the bonnet.
	* At least one door is open. ► Close all doors.
	* The boot lid is open. **DANGER** Danger to life from toxic exhaust gas when the boot lid is open Combustion engines emit toxic exhaust gases suchas carbon monoxide. Inhaling these exhaust gases is hazardous to health and leads to poisoning. Exhaust gases can enter the vehicle interior if the boot lid is open when the engine is running, especially if the vehicle is in motion. ► Always switch off the engine before opening the boot lid. ► Never drive with the boot lid open. ► Close the boot lid.

Display messages	Possible causes/consequences and ▶ Solutions
Function blocked as centre backrest is folded down	* You cannot electrically unlock the left seat backrest. ▶ Fold the centre seat backrest back until it engages.
 Rear left seat backrest not locked	* The seat backrest of the corresponding seat is not engaged. ▶ Fold the seat backrest back until it engages.
 Rear right seat backrest not locked	* The seat backrest of the corresponding seat is not engaged. ▶ Fold the seat backrest back until it engages.
4matic currently unavailable	* 4MATIC is currently unavailable. ▶ Continue driving with caution. ▶ Consult a qualified specialist workshop.
4matic inoperative	* 4MATIC is inoperative. ▶ Continue driving with caution. ▶ Consult a qualified specialist workshop.

Engine

Display messages	Possible causes/consequences and ▶ Solutions
To switch off the vehicle, press the Start/Stop button for at least 3 seconds or 3 times	* You have pressed the start/stop button while the vehicle is in motion. ▶ Information on switching off the vehicle while it is in motion (⟶ page 326).

Display messages	Possible causes/consequences and ▶ Solutions
 Top up coolant See Owner's Manual	* The coolant level is too low. **NOTE** Engine damage due to insufficient coolant ▶ Avoid long journeys with insufficient coolant. ▶ Add coolant (⟶ page 722). ▶ Have the engine cooling system checked at a qualified specialist workshop.
 Coolant Stop Switch off the vehicle	* The coolant is too hot. ▶ Stop immediately in accordance with the traffic conditions and switch off the vehicle. **WARNING** Risk of burns when opening the bonnet **IF YOU OPEN THE BONNET IN THE EVENT OF AN OVERHEATED ENGINE OR FIRE IN THE ENGINE COMPARTMENT, THE FOLLOWING SITUATIONS MAY OCCUR:** • You may come into contact with hot gases. • You may come into contact with other escaping hot operating fluids. ▶ Before opening the bonnet, allow the engine to cool down. ▶ In the event of a fire in the engine compartment, keep the bonnet closed and call the fire service. ▶ Wait until the engine has cooled down. ▶ Ensure that the air supply to the radiator is not obstructed.

Display messages	Possible causes/consequences and ▶ Solutions
	▶ Avoiding high loads on the engine, drive to the nearest qualified specialist workshop. Additionally, ensure that the coolant temperature display remains below 120 °C.
 Clean the fuel filter	* **Vehicles with diesel engines:** the fuel filter is dirty or the water in the fuel filter needs to be drained. ▶ Consult a qualified specialist workshop.
 Replace air filter	* **Vehicles with diesel engines:** the engine air filter is dirty and must be replaced. ▶ Consult a qualified specialist workshop.
 Reserve fuel	* The fuel supply has dropped into the reserve range. ▶ Refuel.

Transmission

Display messages	Possible causes/consequences and ▶ Solutions
Only select P when vehicle is stationary	* It is possible to select the park position P only if the vehicle is stationary. ▶ Depress the brake pedal to stop. ▶ Shift the transmission to park position P with the vehicle at a standstill.
Apply brake to deselect P position	* You have attempted to shift the transmission out of park position P and into another transmission position. ▶ Depress the brake pedal. ▶ Engage transmission position D, R or neutral N.

Display messages	Possible causes/consequences and ▶ Solutions
Apply brake and start vehicle to shift out of P or N	* You have attempted to shift the transmission out of park position P or neutral N and into another transmission position. ▶ Depress the brake pedal. ▶ Start the vehicle. ▶ Change the transmission position.
Apply brake to engage D or R	* You have attempted to engage transmission position D or R. ▶ Depress the brake pedal. ▶ Engage transmission position D or R.
Apply brake to engage R	* You have attempted to select transmission position R. ▶ Depress the brake pedal. ▶ Select transmission position R.
Apply parking brake to park Visit workshop	* A malfunction has occurred in the emergency power supply to park position P. ▶ Consult a qualified specialist workshop. ▶ Until then, always select park position P manually before you switch off the vehicle. ▶ Before exiting the vehicle, apply the electric parking brake.
Risk of vehicle rolling away Driver's door open Transmission not in P	* The driver's door is not fully closed and transmission position D, R or neutral N is engaged. The vehicle may roll away. ▶ Engage park position P when parking the vehicle.
Risk of vehicle rolling away Apply parking brake to park	* The transmission is malfunctioning. Park position P cannot be engaged. ▶ Park the vehicle safely. ▶ Use the electric parking brake to secure the vehicle against rolling away. ▶ On gradients, turn the front wheels so that the vehicle will roll towards the kerb if it starts moving.

Display messages	Possible causes/consequences and ▶ Solutions
Risk of vehicle rolling away N activated manually No automatic switch to P	* While the vehicle was at a standstill or driving at very low speed, neutral [N] was engaged with the engine running or the vehicle switched on. **NOTE** Damage to the vehicle due to rolling away When the vehicle is switched off or the driver's door is opened, automatic engagement of park position [P] is deactivated. The vehicle may roll away. ► Be ready to brake. ► Do not leave the vehicle unattended. ► Depress the brake pedal until the vehicle comes to a standstill. ► Engage park position [P] when the vehicle is stationary with the brake pedal depressed. ► To continue driving with the brake pedal depressed, engage transmission position [D] or [R].
N automatically activated Please engage transmission position again	* Neutral [N] was automatically engaged when the vehicle was rolling or being driven. When you open the driver's door in neutral [N], park position [P] will be engaged automatically. ► Engage park position [P] when the vehicle is stationary with the brake pedal depressed. ► To continue driving with the brake pedal depressed, select transmission position [D] or [R].
N is selected Please select desired transmission position	* The accelerator pedal was depressed while the vehicle was rolling or moving in neutral [N]. ► To accelerate the vehicle, engage transmission position [D] or [R].
To shift to N, hold selector lever longer in position N	* Selector lever not held for long enough in position [N].

Display messages	Possible causes/consequences and ▶ Solutions
	It will only be possible to change from park position [P] to neutral [N] if the selector lever is held in [N] for an extended period of time. If the selector lever is not held for long enough, park position [P] will remain engaged. ▶ When changing from park position [P] to neutral [N], hold the selector lever in position [N] for an extended period of time.
Reversing not poss. Consult workshop	* The transmission is malfunctioning. It is not possible to engage transmission position [R]. ▶ Consult a qualified specialist workshop.
Transmission Malfunction Stop	* The transmission is malfunctioning. The transmission shifts to neutral [N] automatically. ▶ Stop the vehicle immediately in accordance with the traffic conditions. ▶ Depress the brake pedal. ▶ Engage park position [P]. ▶ Consult a qualified specialist workshop.
Consult workshop without changing the transmission position	* The transmission is malfunctioning. It is no longer possible to change the transmission position. ▶ If transmission position [D] is engaged, consult a qualified specialist workshop and do not change the transmission position. ▶ For all other transmission positions, park the vehicle safely. ▶ Consult a qualified specialist workshop.
Auxiliary battery malfunction (white display message)	* There is a malfunction in the auxiliary battery. ▶ Consult a qualified specialist workshop. ▶ Until then, always select park position [P] manually before you switch off the vehicle. ▶ Before exiting the vehicle, apply the electric parking brake.
Auxiliary battery malfunction (red display message)	* There is a malfunction in the auxiliary battery. ▶ Consult a qualified specialist workshop.

Display messages	Possible causes/consequences and ▶ Solutions
	▶ Until then, always select park position P manually before you switch off the vehicle. ▶ Before exiting the vehicle, apply the electric parking brake.

Brakes

Display messages	Possible causes/consequences and ▶ Solutions
 Parking brake See Owner's Manual	* The yellow indicator lamp (P) is lit. The electric parking brake is malfunctioning. **To apply:** ▶ Switch the vehicle off and then back on again. ▶ Apply the electric parking brake manually (⟶ page 409). If it is not possible to apply the electric parking brake: ▶ Consult a qualified specialist workshop. ▶ Where necessary, also secure the parked vehicle against rolling away. * The yellow indicator lamp (P) and the red indicator lamp (P) are lit. The electric parking brake is malfunctioning. **To release:** ▶ Switch the vehicle off and then back on again. ▶ Release the electric parking brake manually (⟶ page 409). or ▶ Release the electric parking brake automatically (⟶ page 408). If it is still not possible to release the electric parking brake: ▶ Do not continue driving. Consult a qualified specialist workshop. * The yellow indicator lamp (P) is lit and the red indicator lamp (P) is flashing. The electric parking brake is malfunctioning.

Display messages	Possible causes/consequences and ▶ Solutions
	The electric parking brake could not be applied or released. ▶ Switch the vehicle off and then back on again. **To apply:** ▶ Release and then apply the electric parking brake manually (⟶ page 409). **To release:** ▶ Apply and then release the electric parking brake manually. If it is not possible to apply the electric parking brake or the red indicator lamp (P) continues flashing: ▶ Do not continue driving. Consult a qualified specialist workshop. ▶ Where necessary, also secure the parked vehicle against rolling away. * The yellow indicator lamp (P) is lit and the red indicator lamp (P) flashes for approximately ten seconds after the electric parking brake has been applied or released. It then remains lit or goes out. The electric parking brake is malfunctioning. **If the state of charge is too low:** ▶ Charge the 12 V battery (⟶ page 71). **To apply:** ▶ Apply the electric parking brake manually. If it is not possible to apply the electric parking brake: ▶ Consult a qualified specialist workshop. ▶ Where necessary, also secure the parked vehicle against rolling away. **To release:**

Display messages	Possible causes/consequences and ▶ Solutions
	▶ If the conditions for automatic release are fulfilled and the electric parking brake is not released automatically, release the electric parking brake manually (⟶ page 409). If it is still not possible to release the electric parking brake: ▶ Do not continue driving. Consult a qualified specialist workshop.
 Release parking brake	* The red indicator lamp (P) is flashing. **THE ELECTRIC PARKING BRAKE IS APPLIED WHILE YOU ARE DRIVING:** • A condition for automatic release of the electric parking brake has not been fulfilled (⟶ page 408). • You are performing emergency braking using the electric parking brake (⟶ page 410). ▶ Check the conditions for automatic release of the electric parking brake. ▶ Release the electric parking brake manually.
 Parking brake Switch on vehicle to release	* The red indicator lamp (P) is lit. You have attempted to release the electric parking brake with the vehicle switched off. ▶ Switch on the vehicle.
 Brake immediately	* A fault has occurred while the HOLD function was activated. A horn may also sound at regular intervals. You cannot start the vehicle. ▶ Immediately depress the brake pedal firmly until the display message disappears. You can start the vehicle again.
 Malfunction See Owner's Manual	* The brake force boosting function is impaired. The Hill Start Assist may be impaired.

Display messages	Possible causes/consequences and ▶ Solutions
	WARNING Risk of an accident due to a brake system malfunction If the brake system is malfunctioning, braking characteristics may be impaired. ▶ Drive on carefully. ▶ Have the brake system checked immediately at a qualified specialist workshop. ▶ Adjust your speed and drive on carefully, at a suitable distance from the vehicle in front. ▶ Consult a qualified specialist workshop.
 Malfunction Stop vehicle	* The brake force boosting function is impaired and the braking characteristics may be affected. **WARNING** Risk of accident and injury if brake force boosting is malfunctioning If brake force boosting is malfunctioning, increased brake pedal force may be necessary for braking. The braking characteristics may be impaired. The braking distance can increase in emergency braking situations. ▶ Stop in a safe location immediately. Do not continue driving! ▶ Consult a qualified specialist workshop. ▶ Stop the vehicle immediately in accordance with the traffic conditions. Do not continue driving. ▶ Consult a qualified specialist workshop.
 Check brake fluid level	* There is insufficient brake fluid in the brake fluid reservoir.

Display messages	Possible causes/consequences and ▶ Solutions
	WARNING Risk of an accident due to low brake fluid level If the brake fluid level is too low, the braking effect and the braking characteristics may be impaired. ▶ Stop the vehicle as soon as possible, paying attention to road and traffic conditions. Do not continue driving. ▶ Consult a qualified specialist workshop. ▶ Do not top up the brake fluid. ▶ Stop the vehicle immediately in accordance with the traffic conditions. Do not continue driving. ▶ Do not top up the brake fluid. ▶ Consult a qualified specialist workshop.
Check brake pads See Owner's Manual	* The brake linings have reached the wear limit. ▶ Consult a qualified specialist workshop.

Driving and driving safety systems

Display messages	Possible causes/consequences and ▶ Solutions
 currently unavailable See Owner's Manual (ABS and ESP®)	* ABS and ESP® are temporarily unavailable. Other driving systems and driving safety systems (e.g. BAS) may also be temporarily unavailable. The brake system continues to function normally. Braking distance may increase in an emergency braking situation.

Display messages	Possible causes/consequences and ▶ Solutions
	WARNING Risk of skidding if ABS and ESP® are malfunctioning The wheels may lock during braking and ESP® does not perform any vehicle stabilisation. The steerability and braking characteristics are heavily impaired and the braking distance may increase. In addition, other driving safety systems are switched off. ► Drive carefully on a suitable stretch of road, making slight steering movements at a speed above 30 km/h. ► If the display message does not disappear, consult a qualified specialist workshop immediately. Drive carefully. ► Drive with caution on a suitable stretch of road, executing slight steering movements at a speed above 30 km/h. ► If the display message does not disappear, consult a qualified specialist workshop immediately. Extreme caution should be afforded if you continue driving in this situation.
 inoperative See Owner's Manual (ABS and ESP®)	* ABS and ESP® are malfunctioning. Other driving systems and driving safety systems (e.g. BAS) may also be malfunctioning. The brake system continues to function normally. Braking distance may increase in an emergency braking situation.

Display messages	Possible causes/consequences and ▶ Solutions
	WARNING Risk of skidding if ABS and ESP® are malfunctioning The wheels may block during braking and ESP® does not perform any vehicle stabilization. The steerability and braking characteristics are heavily impaired and the braking distance may increase. In addition, other driving safety systems are switched off. ▶ Drive on carefully. ▶ Have ABS and ESP® checked immediately at a qualified specialist workshop. ▶ Continue driving with caution. ▶ Consult a qualified specialist workshop immediately.
 currently unavailable See Owner's Manual (ESP®)	* ESP® is temporarily unavailable. Other driving systems and driving safety systems (e.g.BAS) may also be malfunctioning. **WARNING** Risk of skidding with faulty ESP® If ESP® is not available, ESP® will be unable to perform any stabilisation of the vehicle. In addition, other driving safety systems are switched off. ▶ Carefully navigate a few gentle bends at a speed greater than 30 km/h on a suitable stretch of road. ▶ If the display message does not disappear, consult a qualified specialist workshop immediately. Ensure the utmost of care if you continue to drive the vehicle to this end. ▶ Drive with caution on a suitable stretch of road, executing slight steering movements at a speed above 30 km/h.

Display messages	Possible causes/consequences and ▶ Solutions
	▶ If the display message does not disappear, consult a qualified specialist workshop immediately. Proceed with caution if you continue driving in this situation.
 inoperative See Owner's Manual (ESP®)	* ESP® is malfunctioning. Other driving systems and driving safety systems (e.g. BAS) may also be malfunctioning. The brake system continues to function normally. Braking distance may increase in an emergency braking situation. **⚠ WARNING** Risk of skidding if ESP® is malfunctioning If ESP® is malfunctioning, ESP® cannot carry out vehicle stabilisation. In addition, other driving safety systems are switched off. ▶ Drive on carefully. ▶ Have ESP® checked at a qualified specialist workshop. ▶ Continue driving with caution. ▶ Consult a qualified specialist workshop immediately.
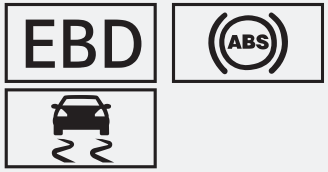 inoperative See Owner's Manual (EBD, ABS and ESP®)	* EBD, ABS and ESP® are malfunctioning. Other driving systems and driving safety systems (e.g. BAS) may also be malfunctioning.

Display messages	Possible causes/consequences and ▶ Solutions
	WARNING Risk of skidding if EBD, ABS and ESP® are malfunctioning The wheels may block during braking and ESP® does not perform any vehicle stabilization. The steerability and braking characteristics are heavily impaired and the braking distance may increase. In addition, other driving safety systems are switched off. ▶ Drive on carefully. ▶ Have the brake system checked immediately at a qualified specialist workshop. ▶ Continue driving with caution. ▶ Consult a qualified specialist workshop immediately.
 Off	* The HOLD function is deactivated due to the vehicle sliding or because a condition for activation is not fulfilled. ▶ Reactivate the HOLD function later or check the activation conditions for the HOLD function (⟶ page 421).
 ATTENTION ASSIST: Take a break!	* ATTENTION ASSIST has detected fatigue or an increasing lack of concentration on the part of the driver (⟶ page 422). ▶ If necessary, take a break.
 ATTENTION ASSIST Microsleep Take a break!	* ATTENTION ASSIST has detected indicators of microsleep (⟶ page 422). A warning tone will also sound. ▶ Take a break immediately. ▶ Press the left-hand Touch Control and acknowledge the display message.

Display messages	Possible causes/consequences and ▶ Solutions
 Remain alert! (white display message)	* ATTENTION ASSIST has detected that the driver is averting their gaze from traffic events (⟶ page 422). A warning tone will also sound. ▶ Focus on the traffic events again.
 Remain alert, otherwise emergency stop will be initiated (yellow display message)	* ATTENTION ASSIST has detected that the driver is not focussing on traffic events after a warning has been issued (⟶ page 422). A continuous warning tone will also sound. ▶ Immediately return your attention to the traffic events. ▶ Press the right-hand Touch Control and acknowledge the display message. If the driver still does not react to the warning, an emergency stop can be initiated by the system. (⟶ page 441)
 ---km/h	* Cruise control cannot be activated because not all activation conditions are fulfilled. ▶ Observe the activation conditions for cruise control (⟶ page 426).
Cruise control inoperative	* Cruise control is malfunctioning. ▶ Consult a qualified specialist workshop.
Cruise control and Limiter inoperative	* Cruise control and the limiter are malfunctioning. ▶ Consult a qualified specialist workshop.
Cruise control off	* Cruise control has been deactivated. If there is an additional warning tone, cruise control has been deactivated automatically (⟶ page 425).
 ---km/h	* The limiter can not be engaged temporarily. The system will become available again when the cause of the problem is rectified.

Display messages	Possible causes/consequences and ▶ Solutions
 passive	* If you depress the accelerator pedal beyond the point of resistance (kickdown), the limiter will be switched to passive mode (⟶ page 425).
Limiter inoperative	* The limiter is malfunctioning. ▶ Consult a qualified specialist workshop.
Speed limit (winter tyres) XXX km/h	* You have reached the maximum permissible stored speed for winter tyres. It is not possible to exceed this speed.
 Maximum speed exceeded	* You have exceeded the maximum permissible speed (for certain countries only). ▶ Reduce your speed.
Traffic Sign Assist currently unavailable See Owner's Manual	* Traffic Sign Assist is temporarily unavailable. The system will become available again when the cause of the problem is rectified. ▶ Continue driving in compliance with the traffic regulations.
Traffic Sign Assist inoperative	* Traffic Sign Assist is malfunctioning. ▶ Continue driving in compliance with the traffic regulations. or ▶ Stop the vehicle in accordance with the traffic conditions and restart the vehicle. ▶ If the display message does not disappear, consult a qualified specialist workshop.
 Malfunction Maximum speed 80 km/h	* AIRMATIC is functioning only to a limited extent. The vehicle's handling characteristics may be affected.

Display messages	Possible causes/consequences and ▶ Solutions
	NOTE The tyres on the front axle or the fenders could be damaged by large steering movements ▶ Avoid large steering movements while driving and listen for scraping sounds. ▶ If you hear scraping sounds, pull over and stop the vehicle in accordance with the traffic conditions, and set a higher vehicle level if possible. ▶ Drive in a manner appropriate for the current level, but do not exceed 80 km/h. ▶ Consult a qualified specialist workshop.
 Malfunction Maximum speed 80 km/h	* AMG RIDE CONTROL is malfunctioning. The vehicle's handling characteristics may be affected. ▶ Do not drive at speeds greater than 80 km/h. ▶ Consult a qualified specialist workshop.
AMG Ride Control Function limited See Owner's Manual	* At least one of the main functions of AMG RIDE CONTROL is malfunctioning. The system is outside the operating temperature range or the on-board electrical system voltage is too low. The system will become available again when the cause of the problem is rectified. **NOTE** The vehicle's suspension and damping behaviour is restricted. The vehicle body may tilt heavily to the side during cornering. ▶ Drive on carefully. ▶ Reduce speed considerably before taking a bend. ▶ Avoid sudden steering movements.

Display messages	Possible causes/consequences and ▶ Solutions
	▶ Continue driving with caution. ▶ Reduce speed considerably before turning into a bend. ▶ Avoid sudden steering movements.
 STOP Vehicle level too low	* You have pulled away despite the vehicle level being too low. ▶ Stop the vehicle in accordance with the traffic conditions. The vehicle will be raised to the selected vehicle level. ▶ Wait until the display message disappears before pulling away. If the display message does not disappear and a warning tone also sounds, AIRMATIC is malfunctioning: ▶ Do not drive at speeds greater than 80 km/h and consult a qualified specialist workshop immediately. **NOTE** The tyres on the front axle or the fenders could be damaged by large steering movements ▶ Avoid large steering movements while driving and listen for scraping sounds. ▶ If you hear scraping sounds, pull over and stop the vehicle in accordance with the traffic conditions, and set a higher vehicle level if possible. ▶ Set a higher vehicle level (⟶ page 467). Depending on the malfunction, the vehicle will be raised.
 Lowering	* **THE VEHICLE LEVEL WILL LOWER FOR THE FOLLOWING REASONS:** • You have selected a different drive program. • You have exceeded the speed limit. • You have changed the vehicle level by pressing the button.

Display messages	Possible causes/consequences and ▶ Solutions
	• **Operation with a trailer or bicycle rack:** if an electrical connection has been established correctly, you have exceeded the speed limit.
 Rising	* Your vehicle is adjusting to the level you have selected.
 Vehicle rising Please wait	* The vehicle level is too low. The vehicle will be raised to the selected vehicle level. ▶ Wait until the display message disappears before pulling away.
 Max. speed 20km/h	* AIRMATIC is functioning only to a limited extent. The current level is too high. The vehicle's handling characteristics may be affected. ▶ Do not drive at speeds greater than 20 km/h. ▶ Consult a qualified specialist workshop.
 Reduce speed	* You are driving too fast for the selected vehicle level. ▶ Reduce your speed and then select the desired vehicle level again. You are driving too fast with a trailer or the trailer hitch socket is being used, e.g. for a rear bicycle rack. ▶ Observe the notes on trailer operation (⟶ page 503).
 Compressor is cooling	* Due to frequent level changes within a short space of time, the compressor first needs to cool down in order to set the selected vehicle level. ▶ Drive on in a manner appropriate for the current level. Ensure that there is sufficient ground clearance. When the compressor has cooled down, the vehicle will continue rising to the selected vehicle level.
RACE START not possible See Owner's Manual	* **POSSIBLE CAUSES:** • The activation conditions have not been fulfilled (⟶ page 470).

Display messages	Possible causes/consequences and ▶ Solutions
RACE START cancelled	* **POSSIBLE CAUSES:** • you released the accelerator pedal during RACE START. • you depressed the brake pedal during RACE START. ▶ You can try RACE START again at the next start.

Driver assistance systems

Display messages	Possible causes/consequences and ▶ Solutions
Emergency stop initiated To cancel: operate steering wheel and a pedal	* No driver activity (e.g. steering or accelerating) was detected for an extended period. Active Emergency Stop Assist will initiate an emergency stop (⟶ page 439). ▶ Place your hands on the steering wheel. ▶ Move the steering wheel. ▶ Accelerate or brake. Information on cancelling an emergency stop (⟶ page 441).
 ---km/h	* Active Distance Assist DISTRONIC cannot be activated because not all activation conditions are fulfilled. ▶ Comply with the activation conditions of Active Distance Assist DISTRONIC (⟶ page 432).
 suspended	* If you depress the accelerator pedal beyond the setting of Active Distance Assist DISTRONIC, the system will switch to passive mode (⟶ page 429).

Display messages	Possible causes/consequences and ▶ Solutions
 Off	* Active Distance Assist DISTRONIC was deactivated. If a warning tone also sounds, Active Distance Assist DISTRONIC has deactivated automatically (⟶ page 432).
Active Distance Assist currently unavailable See Owner's Manual	* Active Distance Assist DISTRONIC is temporarily unavailable. The ambient conditions are outside the system limits (⟶ page 429). The system will become available again as soon as the ambient conditions are within the system limits. ▶ Continue driving with caution. or ▶ If the display message does not disappear, stop the vehicle in accordance with the traffic conditions and restart the vehicle.
Active Distance Assist inoperative	* Active Distance Assist DISTRONIC is malfunctioning. Other driving systems and driving safety systems may also be malfunctioning. ▶ Continue driving with caution. or ▶ Stop the vehicle in accordance with the traffic conditions and restart the vehicle. ▶ If the display message does not disappear, consult a qualified specialist workshop.
Active Distance Assist available again	* Active Distance Assist DISTRONIC is operational again. ▶ Switch on Active Distance Assist DISTRONIC (⟶ page 432).
Active Brake Assist Functions currently limited See Owner's Manual	* **FOR VEHICLES WITH THE DRIVING ASSISTANCE PACKAGE, THE FOLLOWING FUNCTIONS MAY BE TEMPORARILY UNAVAILABLE OR ONLY AVAILABLE TO A LIMITED EXTENT:** • Active Brake Assist with cross-traffic function • Evasive Steering Assist

Display messages	Possible causes/consequences and ▶ Solutions
	• PRE-SAFE® PLUS **Vehicles with Blind Spot Assist:** PRE-SAFE® PLUS is temporarily unavailable. The ambient conditions are outside the system limits (⟶ page 448). ▶ Continue driving with caution. The system will become available again as soon as the ambient conditions are within the system limits. or ▶ If the display message does not disappear, stop the vehicle in accordance with the traffic conditions and restart the vehicle.
Active Brake Assist Functions limited See Owner's Manual	* **FOR VEHICLES WITH THE DRIVING ASSISTANCE PACKAGE, THE FOLLOWING FUNCTIONS MAY BE TEMPORARILY UNAVAILABLE OR ONLY AVAILABLE TO A LIMITED EXTENT:** • Active Brake Assist with cross-traffic function • Evasive Steering Assist • PRE-SAFE® PLUS ▶ Continue driving with caution. or ▶ Stop the vehicle in accordance with the traffic conditions and restart the vehicle. ▶ If the display message does not disappear, consult a qualified specialist workshop.
Active Steering Assist currently unavailable See Owner's Manual	* Active Steering Assist is temporarily unavailable. The ambient conditions are outside the system limits (⟶ page 439). The system will become available again as soon as the ambient conditions are within the system limits. ▶ Continue driving. ▶ Check the tyre pressure as necessary.

Display messages	Possible causes/consequences and ▶ Solutions
Active Steering Assist inoperative	* Active Steering Assist is malfunctioning. Active Distance Assist DISTRONIC is still available. ▶ Continue driving. or ▶ Stop the vehicle in accordance with the traffic conditions and restart the vehicle. ▶ If the display message does not disappear, consult a qualified specialist workshop.
	* Active Steering Assist has reached the system limits (⟶ page 439). You have not steered independently for a considerable period of time. ▶ Resume manual steering and continue driving in accordance with the traffic conditions.
Active Steering Assist currently unavailable due to multiple emergency stops	* Active Steering Assist is temporarily unavailable due to multiple emergency stops. ▶ Resume manual steering and stop in accordance with the traffic conditions. ▶ Switch the vehicle off and then back on again. Active Steering Assist is available once more.
Active Emergency Stop Assist currently unavailable See Owner's Manual	* Active Emergency Stop Assist is temporarily unavailable. The ambient conditions are outside the system limits (⟶ page 441). The system will become available again as soon as the ambient conditions are within the system limits. ▶ Continue driving. or ▶ If the display message does not disappear, stop the vehicle in accordance with the traffic conditions and restart the vehicle. * **Vehicles without Driving Assistance Package:** Active Emergency Stop Assist is temporarily unavailable due to multiple emergency stops. ▶ Resume manual steering and stop in accordance with the traffic conditions. ▶ Switch the vehicle off and then back on again. Active Emergency Stop Assist will be available once more.

Display messages	Possible causes/consequences and ▶ Solutions
Active Emergency Stop Assist inoperative	* Active Emergency Stop Assist is malfunctioning. ▶ Continue driving. or ▶ Stop the vehicle in accordance with the traffic conditions and restart the vehicle. ▶ If the display message does not disappear, consult a qualified specialist workshop.
Active Lane Change Assist currently unavailable See Owner's Manual	* Active Lane Change Assist is temporarily unavailable. The ambient conditions are outside the system limits (⟶ page 443). The system will become available again as soon as the ambient conditions are within the system limits. ▶ Continue driving. or ▶ If the display message does not disappear, stop the vehicle in accordance with the traffic conditions and restart the vehicle.
Active Lane Change Assist inoperative	* Active Lane Change Assist is malfunctioning. ▶ Continue driving. or ▶ Stop the vehicle in accordance with the traffic conditions and restart the vehicle. ▶ If the display message does not disappear, consult a qualified specialist workshop.
Automatic lane change currently unavailable. See Owner's Manual	* The automatic lane change is temporarily unavailable. The ambient conditions are outside the system limits (⟶ page 443). The system will become available again as soon as the ambient conditions are within the system limits. ▶ Continue driving. or

Display messages	Possible causes/consequences and ▶ Solutions
	▶ If the display message does not disappear, stop the vehicle in accordance with the traffic conditions and restart the vehicle.
Automatic lane change inoperative	* The automatic lane change is malfunctioning. ▶ Continue driving. or ▶ Stop the vehicle in accordance with the traffic conditions and restart the vehicle. ▶ If the display message does not disappear, consult a qualified specialist workshop.
Active Stop-and-Go Assist currently unavailable see Owner's Manual	* Active Stop-and-Go Assist is temporarily unavailable. Active Distance Assist DISTRONIC and Active Steering Assist are still available. The ambient conditions are outside the system limits (⟶ page 429). The system will become available again as soon as the ambient conditions are within the system limits. ▶ Continue driving.
Active Stop-and-Go Assist inoperative See Owner's Manual	* Active Stop-and-Go Assist is malfunctioning. Active Stop-and-Go Assist is deactivated. Active Distance Assist DISTRONIC and Active Steering Assist are still available. ▶ Continue driving. or ▶ Stop the vehicle in accordance with the traffic conditions and restart the vehicle. ▶ If the display message does not disappear, consult a qualified specialist workshop.
Blind Spot Assist and exit warning currently unavailable See Owner's Manual	* Blind Spot Assist is temporarily unavailable. The system limits have been reached (⟶ page 459). The system will become available again when the cause of the problem is rectified. ▶ Continue driving.

Display messages	Possible causes/consequences and ▶ Solutions
	or ▶ If the display message does not disappear, stop the vehicle in accordance with the traffic conditions and restart the vehicle.
Blind Spot Assist and exit warning inoperative	* Blind Spot Assist or the exit warning is malfunctioning. ▶ Continue driving. or ▶ Stop the vehicle in accordance with the traffic conditions and restart the vehicle. ▶ If the display message does not disappear, consult a qualified specialist workshop.
Blind Spot Assist unavailable when towing a trailer See Owner's Manual	* When you establish electrical connection to the trailer, Blind Spot Assist will be unavailable. ▶ Press the left-hand Touch Control and acknowledge the display message.
Active Blind Spot Assist and exit warning currently unavailable See Owner's Manual	* Active Blind Spot Assist is temporarily unavailable. The system limits have been reached (⟶ page 459). The system will become available again when the cause of the problem is rectified. ▶ Continue driving. or ▶ If the display message does not disappear, stop the vehicle in accordance with the traffic conditions and restart the vehicle.
Active Blind Spot Assist and exit warning inoperative	* Active Blind Spot Assist or the exit warning is malfunctioning. ▶ Continue driving. or ▶ Stop the vehicle in accordance with the traffic conditions and restart the vehicle. ▶ If the display message does not disappear, consult a qualified specialist workshop.

Display messages	Possible causes/consequences and ▶ Solutions
Active Blind Spot Assist unavailable when towing a trailer See Owner's Manual	* When you establish electrical connection to the trailer, Active Blind Spot Assist will be unavailable. ▶ Press the left-hand Touch Control and acknowledge the display message.
Active Lane Keeping Assist currently unavailable See Owner's Manual	* Active Lane Keeping Assist is temporarily unavailable. The ambient conditions are outside the system limits (⟶ page 463). The system will become available again as soon as the ambient conditions are within the system limits. ▶ Continue driving.
Active Lane Keeping Assist inoperative	* Active Lane Keeping Assist is malfunctioning. ▶ Continue driving. or ▶ Stop the vehicle in accordance with the traffic conditions and restart the vehicle. ▶ If the display message does not disappear, consult a qualified specialist workshop.
Active Lane Keeping Assist functions restricted See Owner's Manual	* Active Lane Keeping Assist is available but restricted. ▶ Continue driving. or ▶ Stop the vehicle in accordance with the traffic conditions and restart the vehicle. ▶ If the display message does not disappear, consult a qualified specialist workshop.
 Beginning emergency stop	* Your hands are not on the steering wheel. Active Lane Keeping Assist will initiate an emergency stop (⟶ page 463). ▶ Place your hands on the steering wheel. Information on cancelling an emergency stop (⟶ page 441).

Display messages	Possible causes/consequences and ▶ Solutions
 temporarily unavailable Sensors dirty	* **FRONT AND CORNER RADAR SENSORS (HEREAFTER REFERRED TO AS "SENSORS") ARE MALFUNCTIONING. POSSIBLE CAUSES:** • The sensors are dirty • Heavy rain or snow • Extensive country drives with no flowing traffic (e.g. in the desert) Driving systems and driving safety systems may be malfunctioning or temporarily unavailable. The brake system, steering and drive system will continue to function normally. ▶ Continue driving with caution. Once the causes of the problem have been rectified, the driving systems and driving safety systems will be available again and the corresponding symbols are switched off. If the display message does not disappear: ▶ Stop the vehicle in accordance with the traffic conditions. ▶ Clean all sensor covers from the outside (⟶ page 412). ▶ Restart the vehicle.
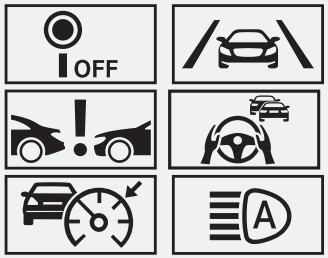 Camera view restricted See Owner's Manual	* **THE VIEW OF THE MULTIFUNCTION CAMERA IS RESTRICTED. POSSIBLE CAUSES:** • Dirt on the windscreen in the field of vision of the multifunction camera • Heavy rain, snow or fog • Mist on the inside or outside of the windscreen: in certain weather conditions, mist can form on the inside or outside of the windscreen during colder times of the year in particular. ⓘ The mist on the windscreen will be removed automatically in a short space of time with the aid of a heater. The restriction is temporary.

Display messages	Possible causes/consequences and ▶ Solutions
	Driving systems and driving safety systems may be malfunctioning or temporarily unavailable. The brake system, steering and drive system will continue to function normally. ▶ Continue driving with caution. ▶ To remove mist from the outside, wipe once (⟶ page 294). ▶ To remove the mist from the inside, press MAX (⟶ page 309). Once the causes of the problem have been rectified, the driving systems and driving safety systems will be available again and the corresponding symbols are switched off. If the display message still does not disappear after a driving time of about 15 minutes: ▶ Stop the vehicle in accordance with the traffic conditions. ▶ Clean the windscreen, especially around the position of the multifunction camera (⟶ page 412). ▶ Restart the vehicle.
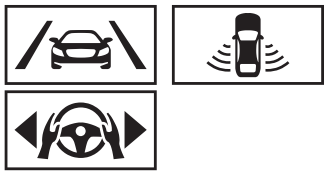 Restricted during trailer operation	* If the trailer socket is occupied, some driving systems will only be available to a limited extent. ▶ Drive with caution if you are towing a trailer or if a bicycle rack is mounted.
The camera's view of the driver is currently impeded Affected functions: see Owner's Manual	* **THE VIEW OF THE DRIVER CAMERA IS REDUCED. POSSIBLE CAUSES:** • Objects or stickers are projecting into the driver camera's field of vision. • The driver camera is dirty. ▶ Keep the driver camera's field of vision free. ▶ Clean the driver camera as necessary. Please observe the notes on interior care with regard to the display (⟶ page 733).

Display messages	Possible causes/consequences and ▶ Solutions
Change steering wheel/ seat position until 6 dots are visible on the upper edge of the screen	* The driver camera cannot capture your line of sight. ▶ Change the steering wheel and seat position until six dots are visible at the top edge of the screen. The display message will appear again if the driver camera is again unable to detect your line of sight after 30 minutes. The display message will no longer appear if you acknowledge the display message and the driver camera cannot detect your line of sight during the entire journey.
Driver camera inoperative See Owner's Manual	* The driver camera is malfunctioning. ▶ Consult a qualified specialist workshop.
PRE-SAFE inoperative See Owner's Manual	* The PRE-SAFE® functions are malfunctioning. ▶ Consult a qualified specialist workshop.
PRE-SAFE impulse side inoperative See Owner's Manual	* The PRE-SAFE® Impulse Side system is malfunctioning or inoperative after having already been triggered. ▶ Consult a qualified specialist workshop.
PRE-SAFE PLUS inoperative See Owner's Manual	* The PRE-SAFE® PLUS system is malfunctioning. ▶ Continue driving. or ▶ Stop the vehicle in accordance with the traffic conditions and restart the vehicle. ▶ If the display message does not disappear, consult a qualified specialist workshop.

Parking assistance systems

Display messages	Possible causes/consequences and ▶ Solutions
PARKTRONIC inoperative See Owner's Manual	* Parking Assist PARKTRONIC is malfunctioning. The system will become available again when the cause of the problem is rectified.

Display messages	Possible causes/consequences and ▶ Solutions
	▶ Continue driving while paying attention to the vehicle's surroundings. or ▶ Stop the vehicle in accordance with the traffic conditions and restart the vehicle. ▶ If the display message does not disappear, consult a qualified specialist workshop.
PARKTRONIC and manoeuvring assistant unavailable at rear when towing a trailer	* If transport equipment (e.g. a trailer or bicycle rack) is attached to the trailer hitch and the electrical connection is correctly established, Parking Assist PARKTRONIC will not be available at the rear as you are reversing. The rear manoeuvring assistant will also be unavailable in this situation. ▶ Press the left-hand Touch Control and acknowledge the display message.
Active Parking Assist and PARKTRONIC inoperative See Owner's Manual	* Active Parking Assist and Parking Assist PARKTRONIC are malfunctioning. The system will become available again when the cause of the problem is rectified. ▶ Continue driving while paying attention to the vehicle's surroundings. or ▶ Stop the vehicle in accordance with the traffic conditions and restart the vehicle. ▶ If the display message does not disappear, consult a qualified specialist workshop.
Limited availability of Active Parking Assist manoeuvring assistant See Owner's Manual	* Active Parking Assist's manoeuvring assistant is temporarily unavailable or only partially available. ▶ Clean all sensors of the parking and camera system (⟶ page 731). ▶ If the display message does not disappear, consult a qualified specialist workshop.

Mercedes-Benz emergency call system

Display messages	Possible causes/consequences and ▶ Solutions
 Inoperative	* The Mercedes-Benz emergency call system is malfunctioning. The Mercedes-Benz Support system is also malfunctioning. ▶ Consult a qualified specialist workshop.

Battery

Display messages	Possible causes/consequences and ▶ Solutions
 12 V on-board electrical system Visit workshop	* The 12 V on-board electrical system is malfunctioning. ▶ Consult a qualified specialist workshop immediately.
 Stop vehicle See Owner's Manual	* The 12 V battery is no longer being charged and the state of charge is too low. **NOTE** Possible engine damage if you continue driving ▶ Do not continue driving under any circumstances. ▶ Consult a qualified specialist workshop. ▶ Stop the vehicle immediately in accordance with the traffic conditions. Do not continue driving. ▶ Switch off the vehicle. ▶ Consult a qualified specialist workshop.

Display messages	Possible causes/consequences and ▶ Solutions
 Start the vehicle to charge the 12 V battery	* The vehicle is switched off and the state of charge for the 12 V battery is too low. ▶ Switch off electrical consumers that are not required. ▶ Drive for 30 - 60 mins. or ▶ Charge the 12 V battery when stationary (⟶ page 71). ▶ **Plug-in hybrid:** charge the vehicle at a charging station (⟶ page 375).
 Stop vehicle Leave vehicle on to charge the 12 V battery	* The state of charge of the 12 V battery is too low. ▶ Stop the vehicle immediately in accordance with the traffic conditions. Do not continue driving. ▶ Leave the vehicle running. ▶ If the display message disappears, continue driving. ▶ If the display message does not disappear, consult a qualified specialist workshop.
 Stop vehicle See Owner's Manual	* The 48 V on-board electrical system is malfunctioning. ▶ Stop the vehicle immediately in accordance with the traffic conditions. Do not continue driving. ▶ Switch off the vehicle. ▶ Consult a qualified specialist workshop.
 Battery overheated Stop. Everybody exit vehicle! Outdoors if possible	* The 48 V battery is overheating. There is a risk of fire. ▶ Stop the vehicle immediately in accordance with the traffic conditions. ▶ If possible, stop the vehicle in the open air and ensure that all vehicle occupants exit the vehicle.

ⓘ The vehicle's auxiliary functions may activate automatically (e.g.the climate control's air-recirculation mode).

Display messages	Possible causes/consequences and ▶ Solutions
	▶ Do not continue driving. ▶ In the event of smoke, leave the danger zone and notify the fire service immediately. ▶ Notify a qualified specialist workshop even if there are no external signs of fire.
 48 V battery See Owner's Manual	* The 48 V on-board electrical system has function restrictions. Comfort functions, such as the air-conditioning system, may be available only to a limited extent. It is possible to drive on. ▶ If the display message remains active permanently, consult a qualified specialist workshop immediately.
 Please wait 48 V battery charging	* The 48 V battery is discharged. You have switched on the vehicle while the 12 V battery was being charged with a suitable charger or while another vehicle was providing starting assistance. The discharged 48 V battery is charged automatically via the voltage converter. After a few minutes, the Possible to start the vehicle again display message will be shown on the driver display. ▶ Start the vehicle. ▶ Continue driving the vehicle for a while to charge the 12 V battery and the 48 V battery after disconnecting the charger from the vehicle. If the Possible to start the vehicle again display message does not appear after a few minutes: ▶ Try to start the vehicle. ▶ If the vehicle does not start, consult a qualified specialist workshop.
Possible to start the vehicle again	* The 48 V battery has been charged automatically via the voltage converter. ▶ Start the vehicle and continue driving for a while to charge the 12 V battery and the 48 V battery.

Tyre pressure monitor

Display messages	Possible causes/consequences and ▶ Solutions
Tyre press. monitor currently unavailable	* There is interference from a powerful radio signal source. As a result, no signals from the tyre pressure sensors are being received. The tyre pressure monitoring system is temporarily unavailable. The tyre pressure monitoring system will restart automatically as soon as the cause has been rectified. ▶ Continue driving.
Tyre press. monitor inoperative	* The tyre pressure monitoring system is malfunctioning. **WARNING** There is a risk of an accident if the tyre pressure monitoring system is malfunctioning The tyre pressure monitoring system cannot issue a warning if there is pressure loss in one or more of the tyres. Tyres with insufficient tyre pressure may impair the driving characteristics as well as steering and braking. ▶ Have the tyre pressure monitoring system checked at a qualified specialist workshop. ▶ Consult a qualified specialist workshop.
Tyre pressure monitor inoperative No tyre pressure sensors	* The wheels fitted do not have suitable tyre pressure sensors. The tyre pressure monitoring system is deactivated. ▶ Fit wheels with suitable tyre pressure sensors.
 Wheel sensor(s) missing	* There is no signal from the tyre pressure sensor in at least one wheel. No pressure value is displayed for the affected tyre. ▶ Have the faulty tyre pressure sensor replaced at a qualified specialist workshop.
 Check tyre(s)	* The tyre pressure in one or more tyres has dropped significantly. The wheel position is displayed. A warning tone will also sound.

Display messages	Possible causes/consequences and ▶ Solutions
	WARNING Risk of an accident due to insufficient tyre pressure • The tyres can burst. • The tyres can wear excessively and/or unevenly. • The driving characteristics as well as the steering and braking may be greatly impaired. You could then lose control of the vehicle. ▶ Observe the recommended tyre pressures. ▶ Adjust the tyre pressure if necessary. ▶ Stop the vehicle in accordance with the traffic conditions. ▶ Check the tyre pressure (⟶ page 773) and the tyres.
 Rectify tyre pressure	* The tyre pressure is too low in at least one of the tyres, or the difference in tyre pressure between the individual wheels is too great. ▶ Check the tyre pressure and add air, if necessary. ▶ When the tyre pressure is correct, restart the tyre pressure monitoring system (⟶ page 775).
 Warning tyre malfunction	* The tyre pressure in one or more tyres has dropped suddenly. The wheel position is displayed.

Display messages	Possible causes/consequences and ▶ Solutions

WARNING
Risk of an accident from driving with a flat tyre

- The tyres can overheat and be damaged.
- The driving characteristics as well as the steering and braking characteristics may be greatly impaired.

You could then lose control of the vehicle.

- ▶ Do not drive with a flat tyre.
- ▶ Do not exceed the maximum permissible driving distance in emergency mode and the maximum permissible speed with a flat MOExtended tyre.
- ▶ Observe the notes on flat tyres.

Notes on flat tyres (⟶ page 74).

▶ Stop the vehicle in accordance with the traffic conditions.

▶ Check the tyres.



Tyre(s) overheated

* At least one tyre is overheating. The affected tyres are displayed in red. At temperatures close to the limit value, the tyres are displayed in yellow.

WARNING
Risk of an accident from driving with overheated tyres

Overheated tyres can burst.

- ▶ Reduce speed so that the tyres cool down.

▶ Reduce your speed so that the tyres cool down.

Display messages	Possible causes/consequences and ▶ Solutions
 Reduce speed	* At least one tyre is overheating. The affected tyres are displayed in red. At temperatures close to the limit value, the tyres are displayed in yellow. **WARNING** Risk of an accident from driving with overheated tyres Overheated tyres can burst. ▶ Reduce speed so that the tyres cool down. ▶ Reduce your speed so that the tyres cool down.

Exhaust gas aftertreatment

Display messages	Possible causes/consequences and ▶ Solutions
 Refill AdBlue See Owner's Manual	* The AdBlue® level has dropped to the reserve range. ▶ Top up AdBlue® immediately(⟶ page 38).
 Top up AdBlue Emergency op. in XXX km See Owner's Manual	* The low AdBlue® level will lead to an output restriction after the remaining distance displayed has been covered. ▶ Top up AdBlue® immediately(⟶ page 38).
 Top up AdBlue XX,X l Emerg. op.: max. XXX km/h Start not poss. in XXX km	* The low AdBlue® level will lead to an output restriction from the speed displayed. After the remaining distance displayed has been covered, it will no longer be possible to start the vehicle. ▶ Add at least the indicated quantity of AdBlue® (⟶ page 38).

Display messages	Possible causes/consequences and ▶ Solutions
 Top up XX,X l AdBlue Switch vehicle on, wait 60 sec. or engine start not poss	* The AdBlue® tank is empty. You can no longer start the vehicle. ▶ Add at least the indicated quantity of AdBlue® (⟶ page 38). ▶ Switch on the vehicle and wait for approximately 60 seconds. ▶ Start the vehicle.
 AdBlue system fault See Owner's Manual	* The AdBlue® system is malfunctioning. ▶ Consult a qualified specialist workshop immediately.
 AdBlue system fault Emergency op. in XXX km See Owner's Manual	* The AdBlue® system is malfunctioning. Performance will be reduced once the remaining distance displayed has been covered. ▶ Consult a qualified specialist workshop immediately.
 AdBlue system fault Emerg. op.: max. XXX km/h Start not poss. in XXX km	* Power restriction due to the AdBlue® system fault. After the distance displayed has been covered, it will no longer be possible to start the vehicle. ▶ Consult a qualified specialist workshop immediately.
 AdBlue system fault Start not possible See Owner's Manual	* The AdBlue® system is malfunctioning. You can no longer start the vehicle. ▶ Consult a qualified specialist workshop immediately.
 Top up AdBlue In XXX km Electric only. See Owner's Manual	* **Plug-in hybrid:** The low AdBlue® level will result in the internal-combustion engine being switched off after the displayed remaining distance has been driven. From this point on, the vehicle can be driven only in all-electric mode, depending on the state of charge of the high-voltage battery.

Display messages	Possible causes/consequences and ▶ Solutions
	▶ Top up with AdBlue® immediately (⟶ page 38).
 Top up XX,X l AdBlue Only "Electric" available See Owner's Manual	* **Plug-in hybrid:** The AdBlue® tank is empty. The vehicle can be driven only in all-electric mode, depending on the state of charge of the high-voltage battery. ▶ Top up with at least the indicated amount of AdBlue® (⟶ page 38). ▶ Switch on the vehicle and wait for approximately 60 seconds. ▶ Start the vehicle.
 AdBlue system fault In XXX km Electric only. See Owner's Manual	* **Plug-in hybrid:** The AdBlue® system is malfunctioning. The combustion engine will switch off after the remaining distance displayed. From this point on, the vehicle can be driven only in all-electric mode, depending on the state of charge of the high-voltage battery. ▶ Consult a qualified specialist workshop immediately.
 AdBlue system fault Only "Electric" drive program available	* **Plug-in hybrid:** The AdBlue® system is malfunctioning. The vehicle can be driven only in all-electric mode, depending on the state of charge of the high-voltage battery. ▶ Consult a qualified specialist workshop immediately.

Engine oil

Display messages	Possible causes/consequences and ▶ Solutions
 Add 1 litre engine oil when next refuelling	* The engine oil level has dropped to the minimum level.

Display messages	Possible causes/consequences and ▶ Solutions
	NOTE Engine damage caused by driving with insufficient engine oil ▶ Avoid long journeys with insufficient engine oil. ▶ When next refuelling, add 1 litre of engine oil (⟶ page 720). Notes on engine oil (⟶ page 870).
 Engine oil level Reduce oil level	* The engine oil level is too high. **NOTE** Engine damage caused by driving with excess engine oil ▶ Avoid long journeys with excess engine oil. ▶ Consult a qualified specialist workshop immediately and have the engine oil level reduced.
 Engine oil level Stop Switch off the vehicle	* The engine oil level is too low. **NOTE** Engine damage caused by driving with insufficient engine oil ▶ Avoid long journeys with insufficient engine oil. ▶ Stop the vehicle immediately in accordance with the traffic conditions. Do not continue driving. ▶ Switch off the vehicle. ▶ Add 1 l of engine oil (⟶ page 720). ▶ Check the engine oil level.

Display messages	Possible causes/consequences and ▶ Solutions
	Notes on engine oil (⟶ page 870).
 Engine oil pressure Stop Switch off the vehicle	* The oil pressure is too low. **NOTE** Engine damage caused by driving with insufficient oil pressure ▶ Avoid driving with insufficient oil pressure. ▶ Stop the vehicle immediately in accordance with the traffic conditions. Do not continue driving. ▶ Switch off the vehicle. ▶ Consult a qualified specialist workshop.
 Engine oil level cannot be measured	* The electrical connection to the oil level sensor has been interrupted or the oil level sensor is faulty. ▶ Consult a qualified specialist workshop.
 Engine oil Quality loss Oil change required	* **Vehicles with a diesel engine:** the engine oil quality is no longer sufficient. ▶ Visit a qualified specialist workshop and have the oil changed.

Warning and indicator lamps

Overview of indicator lamps and warning lamps

Some systems will perform a self-test when the vehicle is switched on. Some indicator lamps and warning lamps may briefly light up or begin flashing. This behaviour is non-critical. These indicator lamps and warning lamps only indicate a fault if they light up or begin flashing after the vehicle has been started or during a journey.

The indicator lamps and warning lamps are located in the highlighted display sections.

DRIVER DISPLAY



DRIVER DISPLAY WITH DRIVER CAMERA



INDICATOR LAMPS AND WARNING LAMPS

OCCUPANT SAFETY

- Restraint system (⟶ page 970)
- Seat belt (⟶ page 970)
- Passive occupant presence reminder (white) (⟶ page 970)
- Passive occupant presence reminder (yellow) (⟶ page 970)

DRIVE SYSTEM

- Reduced power (⟶ page 972)
- System fault (⟶ page 972)
- Electrical fault (⟶ page 972)

VEHICLE

- Trailer hitch (⟶ page 973)
- Power steering (yellow) (⟶ page 973)
- Power steering (red) (⟶ page 973)
- Rear axle steering (yellow) (⟶ page 973)
- Rear axle steering (red) (⟶ page 973)

ENGINE

- Coolant temperature (⟶ page 975)
- Engine diagnosis (⟶ page 975)
- Vehicles with petrol engine: engine operating temperature (⟶ page 975)
- Engine operating temperature (Mercedes-AMG vehicles) (⟶ page 975)
- Vehicles with diesel engine: pre-glow
- Electrical fault (⟶ page 975)
- Fuel reserve with fuel filler flap location indicator (⟶ page 975)

BRAKING

- Electric parking brake (yellow) (⟶ page 978)
- Electric parking brake (red) (⟶ page 978)
- Brakes (yellow) (⟶ page 978)
- Brakes (red) (⟶ page 978)

DRIVING SYSTEMS AND DRIVING SAFETY SYSTEMS

- ABS (⟶ page 980)
- ESP® (⟶ page 980)
- ESP® OFF (⟶ page 980)
- ESP® OFF (⟶ page 980)
- ESP® SPORT (⟶ page 980)
- ATTENTION ASSIST (⟶ page 980)
- Traffic Sign Assist (⟶ page 980)
- Distance warning (⟶ page 980)
- Active Brake Assist (⟶ page 980)
- Active Brake Assist (⟶ page 980)
- Active Brake Assist (⟶ page 980)
- AIRMATIC (⟶ page 980)
- AMG RIDE CONTROL (⟶ page 980)

MERCEDES-BENZ EMERGENCY CALL SYSTEM

- Mercedes-Benz emergency call system (⟶ page 985)

TYRE PRESSURE MONITORING SYSTEM

Tyre pressure monitoring system (⟶ page 986)

EXTERIOR LIGHTING

Standing lights (⟶ page 280)

Low beam (⟶ page 280)

High beam (⟶ page 281)

Turn signal lights (⟶ page 281)

Rear fog light (⟶ page 280)

SYMBOLS ON THE CENTRAL DISPLAY

Drive-Away Assist (⟶ page 493)

Rear cross traffic warning (⟶ page 494)

Close-range braking (⟶ page 495)

Occupant safety

Warning/indicator lamp	Possible causes/consequences and ▶ Solutions
 Restraint system warning lamp	* The restraint system red warning lamp is lit while the vehicle is on. The restraint system is malfunctioning (⟶ page 144).

Warning/indicator lamp	Possible causes/consequences and ▶ Solutions

WARNING
Risk of injury due to malfunctions in the restraint system

Components in the restraint system may be activated unintentionally or not deploy as intended in an accident.

- ▶ Have the restraint system checked and repaired immediately at a qualified specialist workshop.

Plug-in hybrid:

DANGER
Risk of fatal injuries due to restraint system malfunctions

Components in the restraint system may be activated unintentionally or not deploy as planned in an accident. In the event of an accident, the high-voltage on-board electrical system may not be deactivated as intended.

You may suffer an electric shock if you touch the damaged components of the high-voltage on-board electrical system.

- ▶ Have the restraint system checked and repaired immediately at a qualified specialist workshop.
- ▶ After an accident, switch off the vehicle immediately.

- ▶ Continue driving with caution.
- ▶ Observe the messages on the driver display.
- ▶ Consult a qualified specialist workshop immediately.



Seat belt warning lamp flashes

* The red seat belt warning lamp flashes and an intermittent warning tone sounds.
The driver or front passenger has not fastened his/her seat belt while the vehicle is in motion.

- ▶ Fasten your seat belt (⟶ page 143).

There are objects on the front passenger seat.

Warning/indicator lamp	Possible causes/consequences and ▶ Solutions
	▶ Remove the objects from the front passenger seat.
 Seat belt warning lamp lights up	* The red seat belt warning lamp lights up once the vehicle has started. In addition, an intermittent warning tone may sound. The red seat belt warning lamp reminds the driver and front passenger to fasten their seat belts. ▶ Fasten your seat belt (⟶ page 143). If you have placed objects on the front passenger seat, the red seat belt warning lamp may remain lit.
 Occupant presence reminder warning lamp (white)	* The white occupant presence reminder warning lamp is lit. The passive occupant presence reminder is deactivated. ▶ Switch on passive occupant presence reminder (⟶ page 190).
 Occupant presence reminder warning lamp (yellow)	* The yellow occupant presence reminder warning lamp is lit. The passive occupant presence reminder is faulty. ▶ Observe the messages on the driver display.

Drive system

Warning/indicator lamp	Possible causes/consequences and ▶ Solutions
 Reduced-power warning lamp	* The yellow reduced-power warning lamp is lit. Drive system power output is reduced. ▶ Observe the messages on the driver display.
 System error warning lamp	* The red system error warning lamp is lit while the vehicle is in vehicle traction standby READY. There is a malfunction in the drive system. ▶ Observe the messages on the driver display.

Warning/indicator lamp	Possible causes/consequences and ▶ Solutions
 Electrical fault warning lamp	* The red electrical fault warning lamp is lit. There is a fault with the electrics. ▶ Observe the messages on the driver display.

Vehicle

Warning/indicator lamp	Possible causes/consequences and ▶ Solutions
 Trailer hitch warning lamp	* The red trailer hitch warning lamp is lit. The trailer hitch is not operational or is swivelling. **WARNING** Risk of an accident if the ball neck is not locked The trailer may become detached. ▶ Stop the vehicle immediately in accordance with the traffic conditions. Do not continue driving. ▶ Uncouple the trailer and secure it against rolling away. ▶ Initiate a new swivelling procedure and do not re-couple the trailer until the display message disappears. ▶ Observe the messages on the driver display. If the trailer hitch is swivelling: ▶ Wait until the ball neck has reached the operational position.
 Power steering warning lamp (yellow)	* The yellow power steering warning lamp is lit while the vehicle is running. The power assistance or the steering itself is malfunctioning. ▶ Observe the messages on the driver display.

Warning/indicator lamp	Possible causes/consequences and ▶ Solutions
 Power steering warning lamp (red)	* The red power steering warning lamp is lit while the vehicle is running. The power assistance or the steering itself is malfunctioning. **⚠ WARNING** Risk of accident if steering capability is impaired If the steering does not function as intended, the vehicle's operating safety is jeopardised. ► Pull over and stop the vehicle safely as soon as possible, paying attention to road and traffic conditions. Do not continue driving under any circumstances. ► Consult a qualified specialist workshop. ► Observe the messages on the driver display.
 Rear axle steering warning lamp (yellow)	* The yellow rear axle steering warning lamp is lit while the vehicle is running. Rear axle steering is malfunctioning. ► Observe the messages on the driver display.
 Rear axle steering warning lamp (red)	* The red rear axle steering warning lamp is lit while the vehicle is running. Rear axle steering is malfunctioning. **⚠ WARNING** Risk of accident if steering capability is impaired If the steering does not function as intended, the vehicle's operating safety is jeopardised. ► Pull over and stop the vehicle safely as soon as possible, paying attention to road and traffic conditions. Do not continue driving under any circumstances. ► Consult a qualified specialist workshop.

Warning/indicator lamp	Possible causes/consequences and ▶ Solutions
	▶ Observe the messages on the driver display.

Engine

Warning/indicator lamp	Possible causes/consequences and ▶ Solutions
 Coolant warning lamp (red)	* The red coolant warning lamp is lit while the engine is running. **POSSIBLE CAUSES:** • The temperature sensor is malfunctioning • The coolant level is too low • The air supply to the radiator is obstructed • The radiator fan is faulty • The engine coolant pump is faulty If there is an additional warning tone, the coolant temperature has exceeded 120 °C. ⚠ **WARNING** Risk of burns when opening the bonnet **IF YOU OPEN THE BONNET IN THE EVENT OF AN OVERHEATED ENGINE OR FIRE IN THE ENGINE COMPARTMENT, THE FOLLOWING SITUATIONS MAY OCCUR:** • You may come into contact with hot gases. • You may come into contact with other escaping hot operating fluids. ▶ Before opening the bonnet, allow the engine to cool down. ▶ In the event of a fire in the engine compartment, keep the bonnet closed and call the fire service.

Warning/indicator lamp	Possible causes/consequences and ▶ Solutions
	▶ Stop immediately in accordance with the traffic conditions and switch off the vehicle. Do not continue driving. ▶ Observe the messages on the driver display. **If the coolant temperature display is at the lower end of the temperature scale:** ▶ Consult a qualified specialist workshop. **If the coolant temperature display is at the upper end of the temperature scale:** ▶ Exit the vehicle and maintain a safe distance from the vehicle until the engine has cooled down. ▶ Check the coolant level (⟶ page 722). ▶ Ensure that the air supply to the radiator is not obstructed. ▶ Avoiding high loads on the engine, drive to the nearest qualified specialist workshop. Additionally, ensure that the coolant temperature display remains below 120 °C.
 Coolant warning lamp (yellow)	* The yellow coolant warning lamp is lit while the engine is running. **POSSIBLE CAUSES:** • The temperature sensor is malfunctioning • The charge air, transmission oil or battery cooling is faulty • The radiator shutters are blocked or defective ▶ Avoiding high loads on the engine, drive to the nearest qualified specialist workshop.
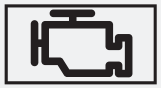 Engine diagnostics warning lamp	* The yellow engine diagnosis warning lamp is lit while the engine is running. A malfunction has occurred in the engine, the exhaust system or the fuel system. The emissions limit value may have been exceeded and the engine may be running in emergency operation mode. ▶ Have the vehicle checked as soon as possible at a qualified specialist workshop. **Vehicles with a diesel engine:** the fuel tank may have been run dry.

Warning/indicator lamp	Possible causes/consequences and ▶ Solutions
	▶ Start the engine three to four times after refuelling. If the yellow engine diagnosis warning lamp goes out, emergency operation mode is cancelled. The vehicle does not need not be checked.
 Electrical fault warning lamp	* The red electrical fault warning lamp is lit. There is a fault in the electrics. ▶ Observe the messages on the driver display.
 Engine operating temperature warning lamp	* The blue warning lamp for engine operating temperature will remain lit until the engine operating temperature has been reached. The engine output and engine torque will remain reduced until then. ▶ This should be considered for your driving style.
 Engine operating temperature warning lamp	* **Vehicles with a petrol engine:** after a cold start, the blue engine operating temperature warning lamp is lit. Engine output and engine torque are reduced. ▶ This should be considered for your driving style.
 Fuel reserve warning lamp lights up	* The yellow fuel reserve warning lamp lights up while the engine is running. The fuel supply has dropped into the reserve range. ▶ Refuel.

Brakes

Warning/indicator lamp	Possible causes/consequences and ▶ Solutions
 Electric parking brake indicator lamp (red)  Electric parking brake indicator lamp (yellow)	* The red electric parking brake indicator lamp is flashing or is lit. The yellow electric parking brake indicator lamp is also lit up in the event of a fault. ▶ Observe the messages on the driver display.
 Brakes warning lamp (yellow)	* The yellow brake warning lamp is lit while the vehicle is running. **⚠ WARNING** Risk of an accident due to a brake system malfunction If the brake system is malfunctioning, braking characteristics may be impaired. ▶ Drive on carefully. ▶ Have the brake system checked immediately at a qualified specialist workshop. The Hill Start Assist may be malfunctioning. ▶ Adjust your speed and drive on carefully, at a suitable distance from the vehicle in front. ▶ If the driver display shows a display message, observe it. ▶ Consult a qualified specialist workshop.
 Brakes warning lamp (red)	* The red brakes warning lamp is lit while the vehicle is running.

Warning/indicator lamp	Possible causes/consequences and ▶ Solutions

POSSIBLE CAUSES:

- The brake force boosting is malfunctioning and the braking characteristics may be affected.
- There is insufficient brake fluid in the brake fluid reservoir.

▶ Observe the messages on the driver display.

WARNING
Risk of accident and injury if brake force boosting is malfunctioning

If brake force boosting is malfunctioning, increased brake pedal force may be necessary for braking. The braking characteristics may be impaired. The braking distance can increase in emergency braking situations.

▶ Stop in a safe location immediately. Do not continue driving!

▶ Consult a qualified specialist workshop.

WARNING
Risk of an accident due to low brake fluid level

If the brake fluid level is too low, the braking effect and the braking characteristics may be impaired.

▶ Stop the vehicle as soon as possible, paying attention to road and traffic conditions. Do not continue driving.

▶ Consult a qualified specialist workshop.

▶ Do not top up the brake fluid.

Driving and driving safety systems

Warning/indicator lamp	Possible causes/consequences and ▶ Solutions
 ABS warning lamp	* The yellow ABS warning lamp is lit while the vehicle is running. ABS is malfunctioning. If an additional warning tone sounds, EBD is malfunctioning. Other driving systems and driving safety systems may also be malfunctioning. ▶ Observe the messages on the driver display. **WARNING** There is a risk of skidding if EBD or ABS is malfunctioning The wheels may lock during braking. The steerability and braking characteristics are heavily impaired and the braking distance may increase. In addition, other driving safety systems are switched off. ▶ Drive on carefully. ▶ Have the brake system checked immediately at a qualified specialist workshop. ▶ Continue driving with caution. ▶ Consult a qualified specialist workshop.
 ESP® warning lamp flashes	* The yellow ESP® warning lamp flashes while the vehicle is in motion. One or more wheels have reached their grip limit (⟶ page 415). ▶ Adapt your driving style to suit the road and weather conditions.

Warning/indicator lamp	Possible causes/consequences and ▶ Solutions
 ESP® warning lamp lights up	* The yellow ESP® warning lamp is lit while the vehicle is running. ESP® is malfunctioning. Other driving systems and driving safety systems (e.g. BAS) may also be malfunctioning. ▶ Note the messages on the driver display. **WARNING** Risk of skidding if ESP® is malfunctioning If ESP® is malfunctioning, ESP® cannot carry out vehicle stabilisation. In addition, other driving safety systems are switched off. ▶ Drive on carefully. ▶ Have ESP® checked at a qualified specialist workshop. ▶ Drive on carefully. ▶ Consult a qualified specialist workshop immediately.
 ESP® OFF warning lamp	* The yellow ESP® OFF warning lamp is lit while the vehicle is running. ESP® is deactivated. Other driving systems and driving safety systems may also be inoperative.

Warning/indicator lamp	Possible causes/consequences and ▶ Solutions

WARNING
Risk of skidding when driving with ESP® deactivated

ESP® does not act to stabilise the vehicle. The availability of further driving safety systems is also limited.

- ▶ Drive on carefully.
- ▶ Deactivate ESP® only for as long as the situation requires.

If ESP® cannot be activated, ESP® is malfunctioning.

- ▶ Have ESP® checked immediately at a qualified specialist workshop.

▶ Observe the notes on deactivating ESP® (⟶ page 415).



* The yellow ESP® OFF warning lamps are lit while the vehicle is running.
ESP® is deactivated.

Other driving systems and driving safety systems may also be inoperative.

Warning/indicator lamp	Possible causes/consequences and ▶ Solutions
	WARNING Risk of skidding when driving with ESP® deactivated ESP® does not act to stabilise the vehicle. The availability of further driving safety systems is also limited. ▶ Drive on carefully. ▶ Deactivate ESP® only for as long as the situation requires. If ESP® cannot be activated, ESP® is malfunctioning. ▶ Have ESP® checked immediately at a qualified specialist workshop. ▶ Observe the notes on deactivating ESP® (⟶ page 416).
 ATTENTION ASSIST warning lamp	* The yellow ATTENTION ASSIST warning lamp is lit. ▶ Consult a qualified specialist workshop.
	* ESP® SPORT is activated while the vehicle is running. When ESP® SPORT is activated, ESP® will stabilise the vehicle only to a limited extent. **WARNING** Risk of skidding if ESP® SPORT is used incorrectly When you activate ESP® SPORT, there is an increased risk of skidding and having an accident. ▶ Activate ESP® SPORT only in the circumstances described below. ▶ Observe the notes on activating ESP® SPORT(⟶ page 416).

Warning/indicator lamp	Possible causes/consequences and ▶ Solutions
 ATTENTION ASSIST warning lamp	* The yellow ATTENTION ASSIST warning lamp is lit. ATTENTION ASSIST is malfunctioning. ▶ Consult a qualified specialist workshop.
 Traffic Sign Assist warning lamp	* The Traffic Sign Assist warning lamp is lit. Traffic Sign Assist is malfunctioning. ▶ Observe the messages on the driver display.
 Warning lamp for distance warning	* The red distance warning lamp lights up while the vehicle is in motion. The distance to the vehicle in front is inadequate for the speed selected. If an additional warning tone sounds, the speed at which you are approaching an obstacle is too high. ▶ Be prepared to brake immediately. ▶ Increase the distance. Function of Active Brake Assist (⟶ page 448).
 Active Brake Assist warning lamp	* The Active Brake Assist warning lamp is lit. The system is unavailable due to dirty sensors or a malfunction, or the range of functions is restricted. ▶ Observe the messages on the driver display.
 Active Brake Assist warning lamp	* The Active Brake Assist warning lamp is lit. The system is switched off or the range of functions has been automatically restricted. This may be due to the driver not wearing a seat belt or activation of another driving system. ▶ Observe the notes on Active Brake Assist (⟶ page 448).
 Active Brake Assist warning lamp	* The Active Brake Assist warning lamp is lit. After you drive off, the system's range of functions will be restricted due to the teach-in process. Depending on the ambient conditions, the teach-in process may take a few minutes. ▶ Observe the notes on Active Brake Assist (⟶ page 448).

Warning/indicator lamp	Possible causes/consequences and ▶ Solutions
 Suspension warning lamp (yellow)	* The yellow AIRMATIC warning lamp is lit. A fault has occurred in AIRMATIC. ▶ Observe the messages on the driver display.
 Suspension warning lamp (red)	* The red AIRMATIC warning lamp is lit. A fault has occurred in AIRMATIC. **NOTE** The vehicle's driving characteristics will have changed significantly. ▶ Consult a qualified specialist workshop. ▶ Observe the messages on the driver display. ▶ Consult a qualified specialist workshop.
 Suspension warning lamp (yellow)	* The yellow AMG RIDE CONTROL warning lamp is lit. There is a fault in the AMG RIDE CONTROL. ▶ Note the messages on the driver display.

Mercedes-Benz emergency call system

Warning/indicator lamp	Possible causes/consequences and ▶ Solutions
 Mercedes-Benz emergency call system warning lamp	* The Mercedes-Benz emergency call system is malfunctioning. The Mercedes-Benz Support system is also malfunctioning. ▶ Consult a qualified specialist workshop.

Tyre pressure monitor

Warning/indicator lamp	Possible causes/consequences and ▶ Solutions
 Tyre pressure monitoring system warning lamp flashes	* The yellow tyre pressure monitor warning lamp (pressure loss/malfunction) flashes for approximately one minute and then remains lit. The tyre pressure monitoring system is malfunctioning.
 Tyre pressure monitoring system warning lamp lights up	* The yellow tyre pressure monitoring system warning lamp (pressure loss/malfunction) is lit. The tyre pressure monitoring system has detected tyre pressure loss in at least one of the tyres.

WARNING
There is a risk of an accident if the tyre pressure monitoring system is malfunctioning

The tyre pressure monitoring system cannot issue a warning if there is pressure loss in one or more of the tyres.

Tyres with insufficient tyre pressure may impair the driving characteristics as well as steering and braking.

► Have the tyre pressure monitoring system checked at a qualified specialist workshop.

► Consult a qualified specialist workshop.

WARNING
Risk of an accident due to insufficient tyre pressure

- The tyres can burst.
- The tyres can wear excessively and/or unevenly.
- The driving characteristics as well as the steering and braking may be greatly impaired.

You could then lose control of the vehicle.

► Observe the recommended tyre pressures.

► Adjust the tyre pressure if necessary.

Warning/indicator lamp	Possible causes/consequences and ▶ Solutions
	▶ Stop the vehicle in accordance with the traffic conditions. ▶ Check the tyre pressure and the tyres.

Back to Contents

Index

Searching for something specific? Click on the relevant initial letter here and look it up.
Incidentally, you can also use your PDF reader's search function at any time.

0-9
A
B
C
D
E
F
G
H
I
J
K
L
M
N
O
P
Q
R
S
T
U
V
W
Z

0-9

3D driver's display, 3D instrument cluster

- Function/notes

4MATIC

48 V on-board electrical system

- Displays in the driver's display
- Operating safety

A

A/C function
- Activating/deactivating (operating unit)
- switching on/off (MBUX)

ABS

Acceleration
- Kickdown
- Optimised acceleration

Accelerator pedal

Access data
- Setting (Bluetooth®)

Accident prevention

Accident, emergency call

Activating/deactivating
- the limiter

Activating/deactivating the acoustic locking verification signal

Active Blind Spot Assist
- Activating/deactivating
- Brake application
- Exit warning
- Function
- Trailer operation

Active bonnet (pedestrian protection)
- Operation

Active Brake Assist
- Function
- Setting

Active Distance Assist DISTRONIC
- Activating/deactivating
- Activating/deactivating the variable limiter
- Active Lane Change Assist
- Active Speed Limit Assist
- Calling up a speed
- Function
- Increasing/decreasing the speed
- Route-based speed adaptation
- Storing a speed

Active Emergency Stop Assist, Emergency Stop Assist
- Function

Active headlamps

Active Lane Change Assist
- Activating/deactivating
- Function

Active Lane Keeping Assist
- Activating/deactivating
- Function
- Setting the sensitivity
- Trailer operation

Active light function

Active Parking Assist
- Automatic braking function

Cross traffic warning
Drive-Away Assist
Exiting a parking space
Function
Manoeuvering brake function
Memory Parking Assist
Parking
Pausing
Remote Parking Assist
Active Service System PLUS
Active Speed Limit Assist
Active Steering Assist
Activating/deactivating
Active Lane Change Assist
Function
Active Stop-and-Go Assist
Adaptive brake lights
Adaptive cruise control
Adaptive Highbeam Assist
Activating/deactivating
Function
Adaptive Highbeam Assist Plus
Function
Switching on/off
AdBlue®
Additives
Capacity

Fill level
Notes
Purity
Range
Topping up
Additional door lock
Additional mobile phone
Connecting
Additives
AdBlue®
Engine oil
Fuel
Adjusting bass, mid-range and treble settings
Burmester® 4D surround sound system
Adjusting mid-range, treble and bass settings
Burmester® 4D surround sound system
Adjusting the balance/fader
Burmester® 4D surround sound system
Adjusting the sound focus
Burmester® 4D surround sound system
Adjusting treble, mid-range and bass settings
Burmester® 4D surround sound system
ADS PLUS damping system
AIRMATIC
After-sales service

Air conditioning menu

- Air distribution
- Calling up
- Fragrance system
- Front air conditioning
- Ionisation
- Rear compartment climate control
- Switching on the steering wheel heater

Air distribution

- Adjustment (THERMATIC)
- Adjustment (THERMOTRONIC)
- Overview
- Setting the climate menu

Air inlet

Air pressure

Air suspension

- Setting (AIRMATIC)

Air vents

- Adjusting (front)

Air-conditioning menu

- Climate control

Air/water duct

Airbag

- Deployment
- Inflating
- Overview

PASSENGER AIR BAG indicator lamps
Warning lamp
Airflow
Adjustment (THERMATIC)
Adjustment (THERMOTRONIC)
AIRMATIC
Function
Setting the vehicle level
Suspension
Vehicle level
Alarm system
All-wheel drive
Alternative route
Ambient lighting
AMG DYNAMIC SELECT
Setting drive programs
AMG Performance
Information
AMG Real Performance Sound
AMG RIDE CONTROL
Selecting the suspension setting
Suspension
AMG steering wheel buttons
Setting
AMG steering-wheel buttons
Function

AMG TRACK PACE
- Configuring
- Drag Race
- Function
- Telemetry display
- Track Race

Android Auto
- Connecting a mobile phone (wired)
- Connecting a mobile phone (wireless)
- Ending
- Information
- Sound settings
- Transferred vehicle data

Android smartphone

Animals (occupant safety)

Anti-lock braking system

Anti-theft alarm system
- Function

Tow-away protection

Anti-theft protection
- Additional door lock
- Function
- Immobiliser

Anticipatory operating-mode strategy

Apple CarPlay®, Smartphone
- Connecting an iPhone® (cable)
- Connecting an iPhone® (wireless)

Ending
Notes
Overview
Sound settings
Transferred vehicle data

Apps

Digital Extras with call function
Mercedes-Benz
Mercedes-Benz Support Calls

Remote Parking Assist
Selecting (MBUX multimedia system)

Assembly licence plate, front

Assistance system

Assistant display

Menu (driver display)

ASSYST PLUS

Battery disconnection periods
Displaying the service due date

Service interval display
Service requirements
Servicing work
Special service requirements

ATA

Deactivating the alarm
Interior protection
Interior protection function
Tow-away protection function

Attaching the luggage net

ATTENTION ASSIST

- Function
- Setting

Attention assistant

Augmented reality

- MBUX route guidance

Authorisations

- Setting

Authorised workshop

Automatic car wash

Automatic car wash mode

Automatic climate control

Automatic distance control

Automatic driving lights

Automatic emergency call

Automatic engine start/stop

Automatic front passenger airbag deactivation

- Function

Automatic front passenger airbag shut-off

- Information (child restraint system on the front passenger seat)
- PASSENGER AIR BAG indicator lamps

Automatic lane change

- Active Lane Change Assist

Automatic measures after an accident

Automatic mirror folding function

Automatic seat adjustment

Automatic transmission

- DIRECT SELECT lever
- Drive programs
- DYNAMIC SELECT button
- Engages neutral
- Engaging drive position
- Engaging reverse gear
- Gear shift
- Kickdown
- Manual shifting
- Oil temperature (driver display)
- Selecting park position
- Steering wheel gearshift paddles
- Transmission position display
- Transmission positions

Autonomous braking

Auxiliary heating/ventilation

- Activating/deactivating

Axle load

- Trailer operation
- Trailer operation (Mercedes-AMG vehicles)

B

Baby
Pregnancy (seat belt)
Bad weather light
Bag hook
Ball neck
Extending/retracting
Extending/retracting (MBUX multimedia system)
Trailer coupling
BAS (Brake Assist System)
Basic information
Battery
Declaration of conformity
High-voltage battery
Battery (12 V battery)
Charging
Notes
Notes (starting assistance and charging)
Replacing
Starting assistance
Battery (48 V)
Battery (high-voltage on-board electrical system)
Battery (key)
Battery (starter battery)
Charging via Remote Online

Battery operation

Belt

- Adjusting the height
- Fastening
- Notes on wearing correctly
- Releasing

Bicycle rack

- Load capacity
- Load capacity (Mercedes-AMG vehicles)
- Trailer operation

Blind Spot Assist

- Activating/deactivating
- Function

BlueTec

- AdBlue®

Bluetooth®

- Connecting a mobile phone
- Information
- Setting up an Internet connection
- Switching on/off

Bonnet

- Active bonnet
- Opening/closing

Boot floor

- Opening

Boot lid

- Closing

HANDS-FREE ACCESS
Limiter
Opening
Power closing function
Brake Assist
Active Brake Assist
Brake Assist System (BAS)
Brake disks
Brake fluid
Brake force distribution
Brake lamps
Adaptive brake lights
Brake pads
Brakes
ABS (Anti-lock Braking System)
Active Brake Assist
Adaptive brake lights
Brake Assist System (BAS)
Driving tips
EBD (Electronic Brakeforce Distribution)
Electric parking brake
Handbrake
HOLD function
Limited braking effect (salt-treated roads)
New/replaced brake pads/brake discs
Parking brake
Post-collision brake

Recuperation
Running-in notes

Braking assistance

Active Brake Assist
Brake Assist System (BAS)

Breakdown

Flat tyre
Overview of aids
Tow-starting
Towing methods
Transporting the vehicle
Wheel change

Burmester® 4D surround sound system

Adjusting the balance/fader
Adjusting the sound focus
Adjusting treble, mid-range and bass settings
Automatic loudness normalisation
Calling up the sound menu
Information
Selecting the sound profile

C

Call list
- Deleting
- Making a call
- Overview
- Selecting options

Calling Support at Mercedes-Benz

Calling up the sound menu
- Burmester® 4D surround sound system

Calls, Telephone operation
- Accepting
- Activating functions during a call
- Calls with several participants
- Declining
- Ending a call
- Incoming call during an existing call
- Making

Mercedes-Benz Support
Telephone
Via the overhead control panel

Camera
- 360° camera
- Button
- Care
- Cleaning

Driver camera
Function
Information
Opening the camera cover (reversing camera)
Reversing camera
Select view

Camera app

Overview
Recording video

Settings
Taking a photo

Car key

Car wash

Automatic car wash
High-pressure cleaner
Washing by hand

Car-to-X-Communication

Display on map

Overview
Sending hazard warnings

Care

Air/water duct
Automatic car wash
Camera
Car parts
Car wash mode
Decorative foil

Display
Exterior lighting
Genuine wood/trim elements
Head-up display
Headliner
High-pressure cleaner
Paint
Plastic trim
Seat belt
Steering wheel
Trailer hitch
Vehicle interior
Vehicle socket for the high-voltage battery
Washing by hand
Wheels/rims
Caring for rims
Central display
Home screen
Central locking system
Button
Key
Centre airbag (driver's seat backrest)
Deployment
Inflating
Information
Charge level display
Charge level/charge display

Charging

- 12 V battery
- Charge level display
- Charging cable control panel
- Charging station, mode 3
- Configuring a weekly profile
- Ending the charging process (alternating current, mode 2/3)
- Ending the charging process (direct current, mode 4)
- Flexible charging system Pro
- In time for departure
- Indicator lamps on vehicle socket
- Mains socket, mode 2
- Maximum charging current (mains socket)
- Notes on charging the high-voltage battery
- Notes on the high-voltage battery
- Rapid charging station, mode 4
- Recuperation
- Starting the charging process (alternating current, mode 2/3)
- Starting the charging process (direct current, mode 4)
- Stowing the charging cable
- USB port
- USB port (rear passenger compartment)
- Wallbox, mode 3

Charging cable

- Control panel
- Flexible charging system Pro
- Stowing

Charging process
- Paying

Charging settings

Charging system

Checking the coolant level

Child safety lock
- Rear door
- Side window (rear)

Child seat
- Adjusting the vehicle seat
- Approval categories
- Basic instructions
- Brief overview of most important points
- Fitting ISOFIX/i-Size
- Front passenger seat
- Notes on fastening seat belts (MBUX Interior Assistant)
- Overview of warning stickers
- Rearward-facing
- Recommendations for child restraint systems
- Risks/dangers
- Seats suitable for belt-secured child restraint systems
- Seats suitable for i-Size child restraint systems
- Seats suitable for ISOFIX child restraint systems
- Securing to the front passenger seat with the seat belt
- Securing to the rear seat with the seatbelt
- Top Tether

Without automatic co-driver airbag shutoff

Children

Avoiding dangers in the vehicle

Basic instructions

Chock

City lighting

Classic menu display content

Selecting

Clean varnish

Cleaning

Air/water duct

Automatic car wash

Boot/load compartment

Camera

Car parts

Car wash mode

Decorative foil

Genuine wood/trim elements

High-pressure cleaner

Paint

Sensors

Vehicle interior

Vehicle socket for the high-voltage battery

Washing by hand

Cleaning the boot

Cleaning the carpet

Cleaning the seat cover

Climate bar, Air conditioning system, Air conditioning system menu, Climate menu
- Configuring
- Operating

Climate control, Air conditioning system
- Activating/deactivating
- Activating/deactivating (rear operating unit)
- Activating/deactivating the A/C function (control panel)
- Air conditioning menu
- Air distribution settings
- Air vents (front)
- Air vents (rear)
- Automatic control
- Automatically controlling (rear operating unit)
- Closing/opening the windows (air-recirculation button)
- Defrosting the windscreen
- Demisting windows
- Fine particle status display
- Immediate pre-entry climate control
- Inserting/removing the flacon (fragrance system)
- Ionisation
- Notes
- Operating unit (THERMATIC)
- Operating unit (THERMOTRONIC)
- Rear operating unit
- Rear window heater (THERMOTRONIC)
- Refrigerant
- Resetting the climate control settings

Residual heat
Setting
Stationary heater/ventilation
Switching air-recirculation mode on/off
Switching the A/C function on/off (MBUX)
Synchronisation function
Ventilation with convenience opening

Climate control settings

Resetting

COC papers, Certificate of conformity

Cockpit

Dashboard (vehicles with EQ technology)
Overview (central display)
Overview (MBUX Superscreen)

Collision detection (parked vehicle)

Adjusting
Information

Collision protection

Drive-Away Assist

Combination switch

Lights
Windscreen wipers

Comfort

Information

Communication module

Disconnecting automatically from the Internet

Setting up an Internet connection
Commuter route
Compass
Components subject to radio regulations
Declaration of conformity
Configuring settings
Camera app
Connection status
Displaying
Overview
Contacts, Address book, Phone book
Calling up
Deleting
Information
Making a call
Name format
Note about suggestions
Options
Selecting options for suggestions
Storing
Control element (MBUX multimedia system)
Setting acoustic feedback
Control elements:
Convenience closing
Convenience feature
Closing/opening the windows (air-recirculation button)
Convenience opening

Coolant
Notes
Cooling
Climate control (THERMATIC)
Copyright
Cornering light
Correct use
Cover
Cross traffic (warning)
Crosswind Assist
Cruise control
activating/deactivating
Calling up a speed
Function
Requirements:
Setting a speed
Storing a speed
Cup holder
using
Current boost pressure (driver display)
Display
Current engine output (driver display)
Display

D

Damage
Limited protection
Dashboard
Cockpit (plug-in hybrid)
Dashcam
Configuring settings
Notes
Selecting a USB device
Starting/stopping individual recordings
Starting/stopping loop recording
Data processing in the vehicle
Data protection
Granting authorisations
Data protection rights
Data storage
Data protection rights
Electronic control units
Online services
Deactivating the alarm
Dealership
Decals
On cameras/sensors
Declaration of conformity
Battery

Components subject to radio regulations
Electromagnetic compatibility
Jack
TIREFIT kit
Decorative foil
Defrost function
DeNOx agent
AdBlue®
Deployed components
Limited protection
Deployment situations
Destination
Editing a suggestion
Editing intermediate destinations
Editing the previous destinations
Saving as a favourite
Destination entry
Accepting a destination suggestion
Entering an intermediate destination
Entering geo-coordinates
Selecting a contact
Selecting a received destination
Selecting from favourites
Selecting from the map
Selecting previous destinations

Destination entry (multimedia system)
- Notes
- Selecting a POI

Diagnostics connection

Diesel
- Notes

Digital Extra
- MB.CHARGE Public
- Plug & Charge

Digital Extras
- Activating

Digital Extras with call function
- Information
- Transferred data

DIGITAL LIGHT
- Activating/deactivating
- Active headlamps
- Adaptive Highbeam Assist
- Adaptive Highbeam Assist Plus
- Assistance functions
- Bad weather light
- City lighting
- Cornering light
- Dynamic low beam
- Enhanced fog light function
- Motorway mode
- Overview

Topographical compensation

Digital Owner's Manual

Digital Vehicle Key

Function
managing
Problem
remove
Setting up
Unlocking setting

DIRECT SELECT lever

Automatic transmission
Engages neutral
Engaging drive position
Engaging park position automatically
Engaging reverse gear
Function
Gearshift recommendation
Manual gearshifting

Selecting park position

Display

Care

Display (driver's display)

Overview of displays

Display (MBUX multimedia system)

Settings

Display message

Calling up on driver display

Notes

Display messages

- - - km/h
LIM - - - km/h
- - - km/h
12 V on-board electrical system Visit workshop
48 V battery See Owner's Manual
Acoustic presence indicator inoperative
AdBlue system fault Emerg. op.: max. XXX km/h Start not poss. in XXX km
AdBlue system fault Emergency op. in XXX km See Owner's Manual
AdBlue system fault In XXX km Electric only. See Owner's Manual
AdBlue system fault Only "Electric" drive program available
AdBlue system fault See Owner's Manual
AdBlue system fault Start not possible See Owner's Manual
Add 1 litre engine oil when next refuelling
ATTENTION ASSIST Microsleep Take a break!
ATTENTION ASSIST: Take a break!
Automatic driving lights inoperative
Battery overheated Stop. Everybody exit vehicle! Outdoors if possible
Beginning emergency stop
Brake immediately
Camera view restricted See Owner's Manual
Change key batteries
Charger cable connected
Check brake fluid level
Check tyre(s)
Clean the fuel filter

- Compressor is cooling
- Coolant Stop Switch off the vehicle
- Currently unavailable Battery low
- Currently unavailable Charge high-voltage battery
- Currently unavailable High-voltage battery charging incomplete.
- Currently unavailable Outside temperature too high
- Currently unavailable Refuel
- currently unavailable See Owner's Manual (ABS and ESP®)
- currently unavailable See Owner's Manual (ESP®)
- Digital Vehicle Key Charge device
- Do not forget key
- Do not leave persons or animals in the vehicle
- Drive power and range reduced See Owner's Manual
- Engine oil level cannot be measured
- Engine oil level Reduce oil level
- Engine oil level Stop Switch off the vehicle
- Engine oil pressure Stop Switch off the vehicle
- Engine oil Quality loss Oil change required
- Front left malfunction Consult workshop
- Front left parking lights
- Front left turn signal
- Front right malfunction Consult workshop
- Front right parking lights
- Front right turn signal
- Fuel tank is depressurised Ready for refuelling
- Have high-voltage system checked See Owner's Manual
- inoperative See Owner's Manual (ABS and ESP®)

- inoperative See Owner's Manual (ESP®)
- EBD inoperative See Owner's Manual (EBD, ABS and ESP®)
- SOS Inoperative
- Key being taught in Please wait
- Key being taught in Please wait
- Key does not belong to vehicle
- Key not detected (red display message)
- Key not detected (white display message)
- Key not detected Place Digital Vehicle Key in inductive charging bracket
- Key not detected
- Left brake lamp
- Left cornering light
- Left daytime running lights
- Left low beam
- Left main beam
- Left mirror turn signal
- Left tail light
- Left window airbag malfunction Consult workshop
- Lowering
- Malfunction Maximum speed 80 km/h
- Malfunction See Owner's Manual
- Malfunction See Owner's Manual
- Malfunction Stop vehicle
- Malfunction Visit workshop
- Malfunction
- Malfunction
- Max. speed 20km/h

- Maximum speed exceeded
- Number plate lamp
-
- Off
- Off
- Operation only possible in transmission position P
- Parking brake See Owner's Manual
- Parking brake Switch on vehicle to release
- passive
- Performance severely limited
- Please wait 48 V battery charging
- Please wait Depressurising fuel tank
- Pre-entry climate control via key available again after starting vehicle
- Pre-entry climate control via key currently unavailable. High-voltage battery low
- Rear axle steering currently malfunctioning
- Rear axle steering Malfunction Stop immediately
- Rear axle steering Malfunction Visit workshop
- Rear fog light
- Rear left seat backrest not locked
- Rear left turn signal
- Rear right seat backrest not locked
- Rear right turn signal
- Rectify tyre pressure
- Reduce speed
- Reduce speed
- Refill AdBlue See Owner's Manual
- Release parking brake

Remain alert, otherwise emergency stop will be initiated (yellow display message)
Remain alert! (white display message)
Replace air filter
Replace key See Owner's Manual
Replace key
Reserve fuel
Restraint system malfunction Consult workshop
Restricted during trailer operation
Reversing light
Right brake lamp
Right cornering light
Right daytime running lights
Right low beam
Right main beam
Right mirror turn signal
Right tail light
Right window airbag malfunction Consult workshop
Rising
Second row of seats, left Malfunction Consult workshop
Second row of seats, right Malfunction Consult workshop
Start the vehicle to charge the 12 V battery
Steering malfunction Drive carefully Visit workshop
Steering malfunction Increased physical effort See Owner's Manual
Steering malfunction Stop immediately See Owner's Manual
Stop Switch off the vehicle
Stop vehicle Leave vehicle on to charge the 12 V battery
STOP Vehicle level too low

- Stop vehicle See Owner's Manual
- Stop vehicle See Owner's Manual
- suspended
- Switch off lights
- Switch on headlamps
- temporarily unavailable Sensors dirty
- Third brake lamp
- Top up AdBlue Emergency op. in XXX km See Owner's Manual
- Top up AdBlue In XXX km Electric only. See Owner's Manual
- Top up AdBlue XX,X l Emerg. op.: max. XXX km/h Start not poss. in XXX km
- Top up coolant See Owner's Manual
- Top up washer fluid
- Top up XX,X l AdBlue Only "Electric" available See Owner's Manual
- Top up XX,X l AdBlue Switch vehicle on, wait 60 sec. or engine start not poss
- Towing not permitted See Owner's Manual
- Trailer brake lamp
- Trailer coupling Check lock (red display message)
- Trailer coupling Check lock (white display message)
- Trailer coupling in motion
- Trailer left turn signal
- Trailer right turn signal
- Trailer tail light
- Tyre(s) overheated
- Vehicle rising Please wait
- Warning tyre malfunction
- Wheel sensor(s) missing
- "Electric" drive program currently unavailable

4matic currently unavailable
4matic inoperative
AC charging inoperative Consult workshop
Active Blind Spot Assist and exit warning currently unavailable See Owner's Manual
Active Blind Spot Assist and exit warning inoperative
Active Blind Spot Assist unavailable when towing a trailer See Owner's Manual
Active bonnet malfunction See Owner's Manual
Active Brake Assist Functions currently limited See Owner's Manual
Active Brake Assist Functions limited See Owner's Manual
Active Distance Assist available again
Active Distance Assist currently unavailable See Owner's Manual
Active Distance Assist inoperative
Active Emergency Stop Assist currently unavailable See Owner's Manual
Active Emergency Stop Assist inoperative
Active Lane Change Assist currently unavailable See Owner's Manual
Active Lane Change Assist inoperative
Active Lane Keeping Assist currently unavailable See Owner's Manual
Active Lane Keeping Assist functions restricted See Owner's Manual
Active Lane Keeping Assist inoperative
Active Parking Assist and PARKTRONIC inoperative See Owner's Manual
Active Steering Assist currently unavailable due to multiple emergency stops
Active Steering Assist currently unavailable See Owner's Manual
Active Steering Assist inoperative
Active Stop-and-Go Assist currently unavailable see Owner's Manual
Active Stop-and-Go Assist inoperative See Owner's Manual
Adaptive Highbeam Assist currently unavailable See Owner's Manual
Adaptive Highbeam Assist inoperative

Adaptive Highbeam Assist Plus currently unavailable See Owner's Manual
Adaptive Highbeam Assist Plus inoperative
Ambient light warning support inoperative
AMG Ride Control Function limited See Owner's Manual
Apply brake and start vehicle to shift out of P or N
Apply brake to deselect P position
Apply brake to engage D or R
Apply brake to engage R
Apply parking brake to park Visit workshop
Automatic lane change currently unavailable. See Owner's Manual
Automatic lane change inoperative
Auxiliary battery malfunction (red display message)
Auxiliary battery malfunction (white display message)
Blind Spot Assist and exit warning currently unavailable See Owner's Manual
Blind Spot Assist and exit warning inoperative
Blind Spot Assist unavailable when towing a trailer See Owner's Manual
Cannot start vehicle See Owner's Manual
Change steering wheel/ seat position until 6 dots are visible on the upper edge of the screen
Charging fault Please change charging method See Owner's Manual
Check brake pads See Owner's Manual
Check low beam setting (left/right-side traffic)
Consult workshop without changing the transmission position
Consult workshop without starting the vehicle again
Cruise control and Limiter inoperative
Cruise control inoperative
Cruise control off
DC charging inoperative Consult workshop

DIGITAL LIGHT Functions limited
Drive malfunction Achievable speed limited Stop soon
Drive malfunction Achievable speed severely limited See Owner's Manual
Driver camera inoperative See Owner's Manual
Emergency stop initiated To cancel: operate steering wheel and a pedal
Front passenger airbag disabled See Owner's Manual
Front passenger airbag enabled See Owner's Manual
Function blocked as centre backrest is folded down
Hazard warning lamp system Malfunction
Head-up display Brightness currently reduced See Owner's Manual
Head-up display currently unavailable See Owner's Manual
Head-up display inoperative
High-voltage battery malfunction. Consult workshop without starting the vehicle again
High-voltage battery malfunction. No start in approx. XXX km Consult workshop (red display message)
High-voltage battery malfunction. No start in approx. XXX km Consult workshop (yellow display message)
Inoperative indicator lamp in driver display. Consult workshop
Limited availability of Active Parking Assist manoeuvring assistant See Owner's Manual
Limiter inoperative
Login failed Change authentication method or charging station
Low beam setting (left/right-side traffic) Manual adjustment only
N automatically activated Please engage transmission position again
N is selected Please select desired transmission position
Not possible to unlock charging cable See Owner's Manual
Occupant presence reminder inoperative
Only electric drive available Power limited
Only select P when vehicle is stationary
PARKTRONIC and manoeuvring assistant unavailable at rear when towing a trailer

PARKTRONIC inoperative See Owner's Manual
Place the key in the marked space See Owner's Manual
Please teach-in trailer coupling again using button in boot. Wait for coupling to extend & retract
Possible to start the vehicle again
PRE-SAFE impulse side inoperative See Owner's Manual
PRE-SAFE inoperative See Owner's Manual
PRE-SAFE PLUS inoperative See Owner's Manual
Preparing drive system...
RACE START cancelled
RACE START not possible See Owner's Manual
Reduced drive power See Owner's Manual
Reversing not poss. Consult workshop
Risk of vehicle rolling away Apply parking brake to park
Risk of vehicle rolling away Driver's door open Transmission not in P
Risk of vehicle rolling away N activated manually No automatic switch to P
Searching for key in stowage tray or Digital Vehicle Key in inductive charging bracket... See Owner's Manual
Snow chain mode Maximum speed exceeded
Speed limit (winter tyres) XXX km/h
The camera's view of the driver is currently impeded Affected functions: see Owner's Manual
To shift to N, hold selector lever longer in position N
To switch off the vehicle, press the Start/Stop button for at least 3 seconds or 3 times
Traffic Sign Assist currently unavailable See Owner's Manual
Traffic Sign Assist inoperative
Transmission Malfunction Stop
Tyre press. monitor currently unavailable
Tyre press. monitor inoperative
Tyre pressure monitor inoperative No tyre pressure sensors

Vehicle is ready to drive Shutdown occurs when locked or automatically in a few minutes
Vehicle is ready to drive Shutdown occurs when locked or automatically in XX mins
Vehicle not currently being charged Try a different charging station
Wiper Malfunction

Displaying road names/house numbers

Distance control

Distance warning

Distraction detection

DISTRONIC

Door

Additional door lock
Child safety lock (rear door)
Emergency key
Extend/retract door handles
Opening (from the inside)
Power closing function
Unlocking (inside)

Door control panel

Seat operation

Door handles

Extending/retracting

Drag Race, Drag race

Drinks holder

Installing/removing

Drive position

Drive program display

Drive programs
- AMG DYNAMIC SELECT
- Function
- Selecting

Drive-Away Assist

Driver camera
- Activating/deactivating
- Function

Driver display
- Identifying faults
- Service due date
- Track Pace menu
- Using
- Warning lamps/indicator lamps

Driver's display, Instrument cluster
- 48 V on-board electrical system
- Assistant display
- Head-up display
- Menus
- Navigation menu
- Notes
- Off-road menu
- Service menu
- Status displays
- Supersport menu

Driver's seat
- Adjusting electrically
- Adjustment (Seat Comfort)
- Easy entry and exit feature
- Seat heating

Driving abroad
- Light adjustment low beam

Driving safety system
- ABS (Anti-lock Braking System)
- Active Brake Assist
- Active Emergency Stop Assist
- Active Lane Change Assist
- Active Lane Keeping Assist
- Active Steering Assist
- Adaptive brake lights
- ATTENTION ASSIST
- BAS (Brake Assist System)
- Blind Spot Assist/Active Blind Spot Assist
- Cameras
- Cruise control
- EBD (Electronic Brakeforce Distribution)
- ESP® (Electronic Stability Program)
- Hill Start Assist
- HOLD function
- Overview
- Sensors
- STEER CONTROL

Traffic light view
Traffic Sign Assist
Trailer Manoeuvering Assist
Your responsibility
Driving system
Driving tips
General driving tips
Light adjustment when driving abroad
Optimised acceleration
Rear axle steering
Recuperation
Running-in notes
Drowsiness detection
Duplicate key
DYNAMIC BODY CONTROL
Function
Suspension
Dynamic handling control system
Dynamic low beam
Activating/deactivating
Overview
DYNAMIC SELECT
Configuring drive program I
Displaying engine data
Displaying vehicle data
Drive program display
Drive programs

Function >
Selecting the drive program >

E

E10

E25

Easy entry feature

- Function
- Setting

Easy exit feature

- Function
- Setting

EBD (Electronic Brake force Distribution)

ECO Assist

- Activating/deactivating
- Plug-in hybrid
- Vehicles with 48 V on-board electrical system

ECO display

ECO start/stop button

- Automatic engine start/stop

ECO start/stop function

- Automatic engine start
- Automatic engine stop
- Conditions (automatic engine stop/start)
- Function
- Switching off/on

Electric drive

Electric parking brake
- Applying automatically
- Emergency braking
- Manually applying/releasing
- Releasing automatically

Electrical fuses

Electromagnetic compatibility
- Declaration of conformity

Electronic Stability Program

Emergency
- Emergency guide
- Fire extinguisher
- First-aid kit (soft sided)
- Overview of aids
- Safety vest
- Warning triangle

Emergency braking
- Active Brake Assist
- Brake Assist System (BAS)
- Carrying out
- Electric parking brake/handbrake

Emergency call
- Automatic
- Manual

Emergency call system
- Digital Extras

Emergency key
- Door
- Inserting/removing

Emergency operation mode
- Start the vehicle

Emergency shutoff (high-voltage on-board electrical system)

ENERGIZING COACH
- Function
- Switching programme recommendations on/off

ENERGIZING COMFORT
- Overview of programmes
- Starting the programme

Energy flow display
- Calling up
- Function/notes

Engine
- Emergency operation mode
- Engine number
- Starting assistance
- switching off (start/stop button)
- Tow-starting

Engine data
- Displaying
- DYNAMIC SELECT

Engine electronics

Engine number

Engine oil, Oil
- Additives
- Capacity
- Capacity (Mercedes-AMG vehicles)
- Checking the oil level using the driver display
- Engine oil temperature (driver display)
- MB-Freigabe or MB-Approval
- MB-Freigabe or MB-Approval (Mercedes-AMG vehicles)
- Quality
- Quality (Mercedes-AMG vehicles)
- Topping up

Engine sound

Engine start
- Emergency operation mode

Engine starting
- Remote Online
- Start/stop button

Entering characters
- Deleting the user dictionary
- Function/notes
- Setting the keyboard language
- using the touchscreen

Environmentally friendly driving

ESC, Electronic Stability Control

ESP®
- Activating/deactivating

Adjusting (steering-wheel button)
Crosswind Assist
ESP® SPORT
Function
Trailer stabilisation
EU type approval number
Exhaust gas aftertreatment, diesel engine
Exit warning
Blind Spot Assist/Active Blind Spot Assist
Exiting a parking space
Active Parking Assist
Drive-Away Assist
PARKTRONIC
Exterior lighting
Care
Light adjustment when driving abroad

F

Factory settings
- MBUX reset function

Fatigue detection

Fault
- Driver display

Fault message
- Driver's display

Favourites
- Adding a destination
- Home address
- Work address

Fill level
- AdBlue®

Filling station search
- Starting automatic search
- Switching the automatic search on/off

Fine particle status display

Fingerprint sensor
- MBUX multimedia system

Fire extinguisher

First aid
- First-aid kit (soft sided)

Fitting
- Snow chains
- Tyres/wheels

Fitting accessories
- Limited protection

Fitting the licence plate (front)

Flacon

Flag holder

Flat towing
- Pulling/towing

Flat tyre
- Notes
- TIREFIT kit
- Wheel change

Flexible charging system Pro

Floor mats

Fog light (extended range)

Fragrance system
- Activating/deactivating
- Adjusting
- Inserting/removing the flacon
- Perfume vial

Free software

Frequencies
- Mobile phone
- Two-way radio

Front airbag

- Deployment
- Inflating

Front headlamps

Front passenger airbag

- Disabling/enabling

Front passenger airbag shutoff, PASSENGER AIR BAG OFF

- Function
- Information (child restraint system on the front passenger seat)

Front passenger display

- Information
- Operating
- Overview
- Visual shield function

Front passenger seat

- Adjusting electrically
- Adjustment (Seat Comfort)

Fuel

- Additives
- Depressurising the fuel tank (plug-in hybrid with petrol engine)
- Diesel
- Diesel quality
- E10
- E25
- Fuel reserve (Mercedes-AMG vehicles)
- Petrol

- Petrol quality
- Refilling
- Reserve
- Sulphur content
- Tank content
- Tank content (Mercedes-AMG vehicles)

Fuel reserve

Function in the event of an accident

- Information (operating principle of the restraint system)

Function seat

Fuses

- Boot
- Cockpit
- Engine compartment
- Front passenger footwell
- Fuse assignment diagram
- Notes

G

G-meter, Acceleration meter

Gallery app

- Content sharing
- Operation

Game controller

- Connecting via Bluetooth
- Disconnecting

Game controller app

- Connecting
- Disconnecting

Garage door opener

- Deleting the HomeLink® buttons
- Performing rolling code synchronisation (if required)
- Problem
- Programming the HomeLink® buttons
- Special programming modes (if required)

Gearshift

- DIRECT SELECT lever
- Manual

Gearshift paddles

- Steering wheel gearshift paddles

General driving tips

Genuine parts

Glide mode

Glove compartment

Locking/unlocking

Grab handles

Notes

Greeting tone

Switching the greeting tone on/off

Gross mass

H

Handbrake
Handling characteristics
Unusual
HANDS-FREE ACCESS
Hands-free system
Haptic accelerator pedal
Hazard warning lights
Hazard warnings
Car-to-X-Communication
Head restraint
Adjusting (rear)
adjusting manually (front, 4-way)
Removing/fitting (rear)
Head-up display
Care
Function
Memory function
Operating
Switching on/off
Headlamp flashing
Headlamp range control
Headlamps
Headliner care

Heating
- Activating/deactivating
- Auxiliary heating
- Centre console
- Climate control (THERMATIC)
- Climate control (THERMOTRONIC)
- Panel heating
- Seat
- Steering wheel

Help call
- Mercedes-Benz emergency call system

High beam

High-pressure cleaner

High-voltage battery
- Charge level display
- Charging ahead of the departure time
- Charging cable control panel
- Charging duration
- Charging station, mode 3
- Configuring a weekly profile
- Connection types
- Ending the charging process (alternating current, mode 2/3)
- Ending the charging process (direct current, mode 4)
- Energy flow display
- Flexible charging system Pro
- General notes on charging
- Mains socket, mode 2

Maximum charging current (mains socket)
Notes
Range
Rapid charging station, mode 4
Recuperation
Starting the charging process (alternating current, mode 2/3)
Starting the charging process (direct current, mode 4)
Stowing the charging cable
Type
Voltage types
Wallbox, mode 3
High-voltage on-board electrical system
Indicator lamps on vehicle socket
Manual switch-off
Operating safety
Hill Start Assist
HOLD function
Function
Switching on/off
Home screen
Central display

I

i-Size child restraint system
- Fitting
- Suitable seats

Identification plate
- Engine
- Refrigerant
- Vehicle

Immediate pre-entry climate control

Immobiliser

Implied warranty

Importer information
- Regulatory radio information

In-Car App Pass

In-Car Apps
- Installing

In-Car Calendar
- Calling up

Inattention detection

Incorrect behaviour by vehicle occupants
- Limited protection

Increase in traffic information volume
- Setting

Indicator lamps/warning lamps
- Overview
- PASSENGER AIR BAG

Individual drive program
- Configuring

Inside mirror

Interior lighting
- Ambient lighting
- MBUX reading light
- Setting
- Switch-off delay time

Interior protection

Intermediate destination
- Editing
- Starting an automatic filling station search
- Starting the automatic service station search

Internet
- Smartphone integration

Internet connection
- Cancelling permission (mobile phone)
- Disconnecting automatically (communication module)
- Displaying the connection status
- Information
- Overview of connection status
- Restrictions
- Setting access data (Bluetooth®)
- Setting up (communication module)

Setting up (Wi-Fi)
Setup (Bluetooth®)

Ionisation

iPhone®

Smartphone integration

ISOFIX child restraint system

Fitting
Suitable seats

J

Jack

- Declaration of conformity
- Storage location

Jump-start connection

K

Key
- acoustic locking verification signal
- Battery
- Deactivating a function
- Emergency key
- Energy consumption
- Function
- Key ring attachment
- Problem
- Replacement key
- Unlocking setting

KEYLESS-GO
- Deactivating
- Locking/unlocking the vehicle
- Problem
- Unlocking setting

Kickdown

Knee airbag

L

Lane Change Assist
Lane Keeping Assist
Lane navigation
- Overview

Lane recognition
- Active Lane Change Assist
- Active Lane Keeping Assist

Language
- Notes
- Setting

Last destinations
- Selecting

Level control
- AIRMATIC
- Setting (AIRMATIC)

Light adjustment
- Driving abroad

Light switch

Lighting
- Dynamic low beam
- Interior lighting

Lights
- Activating/deactivating dynamic low beam

Active headlamps
Adaptive brake lights
Adaptive Highbeam Assist
Adaptive Highbeam Assist Plus
Assistance functions
Automatic driving lights
Bad weather light
City lighting
Combination switch
Cornering light
DIGITAL LIGHT
Dynamic low beam
Fog light (extended range)
Hazard warning lights
High beam
Interior lighting
Light adjustment when driving abroad
Locator lighting
Motorway mode
Reading lamp
Rear fog light
Responsibility for lighting systems
Setting low beam
Switch-off delay time
Topographical compensation
Turn signal light

Limiter

- Activating/deactivating
- Buttons
- Calling up a speed
- Function
- Passive mode
- Permanent setting
- Requirements:
- Selecting
- Setting a speed
- Storing a speed

Live Traffic Information

- Displaying the traffic map
- Displaying traffic incidents
- Extending a subscription
- Information from the service provider
- Registering

Load capacity

- Bicycle rack

Loading

- Attaching the luggage net
- Bag hook
- Notes
- Roof luggage rack
- Stowage space under the boot floor
- Tie-down eyes

Loading guidelines
Loads
Locator lighting
Locking/unlocking
- Additional door lock
- Automatic locking (MMS)
- Doors (from the inside)
- Emergency key
- KEYLESS-GO
- Mercedes-Benz Connect
- NFC function

Loud sound
- PRE-SAFE® Sound

Low beam
- Activating/deactivating
- Left-hand/right-hand traffic
- Light adjustment when driving abroad
- Setting

Low emission zone
- Avoiding/exiting
- Drive program change (plug-in hybrid)

lubricants

Luggage
- Attaching the luggage net

Luggage rack
Lumbar support

M

Maintaining safe distance
- Active Distance Assist DISTRONIC

Maintenance

Maintenance Management
- Notes
- Transferred data

Malfunction
- Restraint system

Manoeuvering brake function

Manoeuvring
- Drive-Away Assist
- Manoeuvering brake function

Manoeuvring assistant
- Cross traffic warning
- Drive-Away Assist
- Manoeuvering brake function

Manual gearshifting
- Activating/deactivating

Map, Traffic map
- Avoiding an area
- Avoiding an area (overview)
- Changing an area
- Deleting an area
- Displaying online map contents

Displaying Qibla
Displaying the compass
Displaying the map version
Displaying the range
Displaying the satellite map
Displaying the traffic map
Displaying weather information
Map data
Moving
Route overview after start
Selecting additional information
Selecting POI symbols
Setting the map scale
Setting the map scale automatically
Updating
Map functions
Massage programmes
Overview
Resetting the seat adjustments
Select
Maximum full-stop braking
Maximum permissible gross vehicle mass
Maximum speeds
MB Apps
Calling up Digital Extras
Calling up the Mercedes me ID user account
Unlinking the Mercedes me ID user account

MB.CHARGE Public, Paying
- Charging stations display

MBUX Interior Assistant
- Camera & parking
- Driver camera
- Lasers and laser classification
- Notes on securing the child seat with the belt
- Opening/closing the roller sunblind on the rear window
- Overview
- Preselection outside mirrors
- Reading light
- Search light
- Selecting settings

MBUX multimedia system
- Activating and starting routines
- Adjusting the volume
- Air conditioning menu
- Authorisations
- Calling up the zero layer
- Creating routines
- Dashcam
- Display settings
- Drive programs
- ENERGIZING seat kinetics
- Factory setting
- Fingerprint sensor
- Home screen

Language settings
MB Apps
MBUX Interior Assistant
Memory Park function
Operating the zero layer
Overview
Personalised routines
Selecting routines
Set keyboard
Setting collision detection
Setting route-based speed adaptation
Snow chain mode
Starting the ENERGIZING COMFORT programme
Steering wheel heater/seat heating
Switching the sound on/off
Touchscreen
Zero layer
MBUX reading light
MBUX search light
MBUX Voice Assistant
Function
Language setting
Media voice commands
Online voice commands
Online voice control
Operable functions
Operating safety

Setting
Speech quality
Voice commands
Voice prompting
Mecca
Media
General information
Media mode
Adding a favourite song
Connecting Bluetooth® audio equipment
Connecting USB mass storage devices
Controlling media playback
Copyright and trademarks
Information
Information about the search function in categories
Overview of the media menu
Playing back similar music tracks
Removing a favourite song
Starting a search in categories
Starting and operating playback
Starting media playback
Supported formats and data storage media
Surprise mix
Using the keyword search
Medical aids
Memory function
Head-up display

Outside mirrors
Seat
Steering wheel

Memory Park function

Adjusting

Memory Parking Assist

Exiting a parking space
Function
Parking

Recording

Menus (driver display)

Sport
Track Pace

Menus (driver's display), Steering-wheel buttons

Assistant display
Navigation
Notes
Off-road

Operating
Service
Supersport

Mercedes-Benz app

Activating Digital Extras

Mercedes-Benz emergency call system, Call for help

Automatic emergency call
Availability
Data processing

Data transfer
Manual emergency call
Overview
Self-diagnosis

Mercedes-Benz GenuineParts

Mercedes-Benz service centre

Mercedes-Benz Support

Accident and Breakdown Management Digital Extras

Mercedes-Benz Support Calls

Arranging a service appointment
Calling Mercedes-Benz Support after automatic accident/breakdown detection
Calls via the overhead control panel
Consent to data transfer
Information
Mercedes-Benz Support
Transferred data

Message memory

Messages, Short messages, Text messages

Calling a message sender
Deleting
Dictating
Forwarding
Overview
Read-aloud function
Reading
Replying

Sending
Setting the displayed text messages
Using a phone number or URL
Microsleep detection
Mirrors
Mirror folding function
Outside mirrors
Rear-view mirror
Mobile phone
Authorising, Remote Parking Assist
Cancelling permission for Internet connection
Frequencies
Maximum transmission output
Smartphone integration
Telephone
Wireless charging (front)
Model type
Modification
Limited protection
Motorway mode

N

Navigation

- Activating
- Destination entry
- Displaying/hiding the menu
- MBUX voice commands
- Menu (driver display)
- Overview
- Updating the map data

Navigation announcements

- Activating/deactivating
- Adjusting the volume
- Repeating
- Switching audio fadeout on/off

Near-Field Communication (NFC)

- Unlocking/locking the vehicle (Digital Vehicle Key)

Neutral

Notifications Centre

- Calling up a notification
- Editing a notification
- Message types
- Overview
- Selecting actions

O

Objects in the vehicle interior
- Limited protection
Occupant safety
- Airbag
- Basic information
- Child seat
- Information on the child restraint system
- Information on the correct seat position
- Passive occupant presence reminder
- Pets in the vehicle
- PRE-SAFE®
- Pregnancy (seat belt)
Off-road
On-board diagnostics interface
On-board electronics
- Engine electronics
- Two-way radios
Online services
Open Source Software
Opening the boot lid using your foot
- HANDS-FREE ACCESS
Operating fluids
- AdBlue®
- Additives

Brake fluid
Coolant
Diesel
Engine oil
Notes
Petrol
Refrigerant (air conditioning system)
Windscreen washer fluid

Operating safety

48 V on-board electrical system
High-voltage on-board electrical system

Outside mirrors

Automatic anti-dazzle mode
Automatic mirror folding function
Blind Spot Assist/Active Blind Spot Assist
Folding in/out
Memory function
Parking position
Preselection MBUX
Setting
Warning lamp

Overhead control panel

P

Paint code

Panel heating

Park position

- DIRECT SELECT lever

Parking

- Active Parking Assist
- PARKTRONIC
- Prior booking

Parking Assist

- Active Parking Assist
- Memory Parking Assist
- PARKTRONIC
- Remote Parking Assist

Parking Assist PARKTRONIC

- Activating/deactivating
- Function

- Setting warning tones

Parking assistance systems

- Active Parking Assist
- Drive-Away Assist
- Manoeuvering brake function
- Memory Parking Assist
- PARKTRONIC
- Remote Parking Assist

Parking brake

Parking charges

- Paying

Parking lights

Parking option

- Displaying on the map

Parking position

- Outside mirrors
- Storing the front-passenger outside mirror using the memory button
- Storing the position of the passenger outside mirror using reverse gear

Parking service

- Displaying a parking option on the map
- Paying parking charges
- Prior booking of a parking space
- Selecting parking options

Parking space

- Finding

Parking support

- Activating/deactivating

Parking up

PARKTRONIC

PASSENGER AIR BAG

- Status display, front passenger air-bag

Passive occupant presence reminder

- Activating/deactivating
- Function

Pedestrian protection, Active bonnet
Selecting
Pennant staff
Petrol
Permissible axle load
Pets in the vehicle
Permitted towing methods
Pictures
Overview (plug-in hybrid)
Gallery app
Personalised routines
PIN protection
Activating and starting
System PIN protection
Creating
Plastic trim care
Overview
Plug-in hybrid operation
Charging cable control panel
Charging the high-voltage battery at a rapid charging station (mode 4)
Ending the charging process (alternating current, mode 2/3)
Ending the charging process (direct current, mode 4)
Function of the recuperative brake system
Functions of the energy flow display
Haptic accelerator pedal
Indicator lamps on vehicle socket

Manually disconnecting the high-voltage on-board electrical system
Maximum charging current (mains socket)
Notes on charging (charging station, mode 3)
Notes on charging (mains socket, mode 2)
Notes on charging (wallbox, mode 3)
Notes on plug-in hybrid operation
Operating safety
Power meter
Route-based operating-mode strategy
Sets recuperation
Starting the charging process (alternating current, mode 2/3)
Starting the charging process (direct current, mode 4)
Stowing the charging cable
POI
Selecting
POI symbols
Selecting
Post-collision brake
Power closing function
Boot lid
Door
Power meter, Output
Function/note
Power supply
Start/stop button
Switching on (start/stop button)

Pre-entry climate control

- activating/deactivating for departure time
- for departure time, function
- for departure time, setting
- immediate
- Pre-heating

Pre-entry climate control upon unlocking

- Activating/deactivating
- Adjusting

Pre-entry climate control when unlocking the vehicle

- Function

PRE-SAFE®, Anticipatory occupant protection

- Function
- PRE-SAFE® Sound
- Reversing measures

PRE-SAFE® Impulse Side

- Function
- Inflating

PRE-SAFE® PLUS

- Function
- Reversing measures

Pregnancy

- Information on the correct seat position
- Seat belt

Preventative occupant protection system

Program

Progressive Sport Sound

- Information
- Using

Protection

- Information (operating principle of the restraint system)
- Limited

Protection against collision

- Manoeuvering brake function

Protection of the environment

- Driving style
- Take-back of end-of-life vehicles

Pulling

- Towing methods (plug-in hybrid)

Pulling away

- Optimised acceleration

Q

Qibla

QR code rescue card

Qualified specialist workshop

R

RACE START
- Activating
- Activation conditions
- Information

Racetrack mode
- AMG steering-wheel buttons

Radio
- Activating
- Activating/deactivating radio text
- Calling up a slide show
- Calling up the station list
- Deleting stations
- Displaying radio text
- Editing station presets
- Entering a frequency directly
- Frequency fix
- Managing favourites
- MBUX voice commands
- Menu
- Moving stations
- Overview
- Searching for a channel
- Setting a channel
- Setting station tracking

Setting the frequency band
Setting the traffic information service volume increase
Station suggestion
Storing radio stations
Switching a slide show off/on

Radio (audio system)

Switching traffic announcements on/off

Radio announcements

Activating or deactivating
Selecting

Radio regulations

Importer information
Regulatory radio identification
Specific absorption rate
Wireless applications

Rain closing function

Side windows
Sliding sunroof

Rain sensor

Side windows
Sliding sunroof
Windscreen wipers

Range

AdBlue®

REACH regulation

Reading lamp

Interior lighting

Rear axle steering

Rear compartment climate control

Rear door (child safety lock)

- Securing

Rear fog lamp

Rear fog light

Rear seat belt

- Status display

Rear window

- Roller sunblind

Rear window heater

- Operation (THERMATIC)

Rear-view mirror

Rearward-facing child seat

- Information

Recordings

- Camera app

Recuperation

- Function
- Setting

Recycling

Reducing agent

- AdBlue®

Refrigerant

Refuelling

- Depressurising the fuel tank (plug-in hybrid with petrol engine)

Fuel
Refuelling the vehicle
Topping up AdBlue®
Registration
Remote Online
Charging the starter battery
Cooling/heating the vehicle interior
Starting the vehicle
Remote Parking Assist
Authorising a mobile phone
Function
Operating
Replacement key
Reserve
Fuel
Fuel (Mercedes-AMG vehicles)
Resetting
MBUX reset function
Residual heat
Switching on/off (front)
Responsibility
Driving safety systems
Restraint system
Basic information
Basic instructions for children

Deployment situations
Functionality
Information on the correct seat position
Information on the operating principle
Limited protection
Malfunction
Protection
Self-test
Warning lamp

Reverse gear
DIRECT SELECT lever
Reversing camera
360° Camera
Function
Opening the camera cover
Rocking free
Roll away protection

Roller sunblind
Opening/closing on the rear window (MBUX Interior Assistant)
Rear window
Side windows
Sliding sunroof
Roof load
Roof load (Mercedes-AMG vehicles)
Roof luggage rack
Loading

Securing

Route

Adjusting on the map
Alternative route
Calculating
Calculating alternative routes
Commuter route
Displaying destination information
Displaying the route list
Editing a stored route
Low emission zone
Navigation
Planning
Range Display service
Recording
Saving a recorded route
Selecting a type
Selecting notifications
Selecting options
Starting a saved route
Starting the automatic service station search
Switching the automatic filling station search on/off

Route guidance

Cancelling
Changing direction
Destination reached
Lane recommendations

Motorway information >
Notes >
Off-road >

Route guidance with augmented reality

Activating >
Activating/deactivating the traffic light view >
Displaying road names/house numbers >
Overview >

Route-based

speed adaptation >

Route-based operating-mode strategy

Function >

Route-based speed adaptation

Function >
Setting >

Running-in notes >

S

Safety system
Safety vest
Satellite map
Saving a destination suggestion as a favourite
Searching for a channel
Seat, Front seat
Adjusting electrically
Adjustment (Seat Comfort)
Automatic adjustment
Centre airbag (driver's seat backrest)
Configuring settings
Correct driver's seat position
ENERGIZING seat kinetics
Folding back the backrest (rear)
Folding the backrest forwards (rear)
Locking the backrest (rear)
Lumbar support
Massage programmes
Memory function
Panel heating
Resetting the adjustments
Settings
Side airbag
Workout programmes

Seat belt
- Activating/deactivating seat belt adjustment
- Adjusting the height
- Automatic tightening
- Care
- Fastening
- Notes on wearing correctly
- Rear seat belt status display
- Releasing
- Warning lamp
- Wearing during pregnancy

Seat belt adjustment
- Activating/deactivating
- Function

Seat belt tensioners
- Inflating

Seat belt warning

Seat heating
- Activating/deactivating

Seat kinetics
- Setting

Seat ventilation
- Activating/deactivating

Selecting a gear

Selecting a sound characteristic (steering-wheel button)

Selecting the sound profile
- Burmester® 4D surround sound system

Selector lever

Self-test
- Automatic front passenger airbag shutoff
- Restraint system

Sensors
- Cleaning
- Information

Service
- Menu (driver's display)

Service centre

Service due date

Service interval display

Service station search
- Starting automatic search

Servicing work
- Information on carrying out maintenance work at regular intervals

Setting the date format

Setting the distance unit

Settings
- Information

Shifting
- Automatic transmission
- Gearshift recommendation
- Manual
- Steering wheel gearshift paddles

Shortening the braking distance
- Brake Assist System (BAS)

Shunting assistant

Shunting support

Side airbag
- Deployment

Side window
- Close with key
- Convenience closing
- Convenience opening
- Opening with the key
- Opening/closing
- Window films

Side windows
- Automatic function
- Child safety lock (rear)
- Problem
- Rain closing function
- Roller sunblind

Skid chains

Sliding sunroof, Panorama sliding sunroof
- Automatic functions
- Close with key
- Opening with the key
- Opening/closing
- Problem
- Rain closing function

Smartphone integration
- Apple CarPlay®/Android Auto

Snow chain mode

Snow chains

Socket
- 12 V (front passenger footwell)
- Trailer operation

Socket flap

SOS button

Sound
- AMG Real Performance Sound
- PRE-SAFE® Sound
- Wheels/tyres

Sound settings
- Adjusting treble, mid-range and bass settings
- Automatic loudness normalisation
- Calling up the sound menu
- Setting the balance and fader

Spare parts

Spare wheel, Emergency spare wheel
- Notes

Specialist workshop

Specific absorption rate (SAR)

Speed
- Limit, Limiter

Speed control
- Active Distance Assist DISTRONIC

Cruise control
Limiter
Speed limit
Winter tyres
Standing lights
Start-off Assist
Optimised acceleration
Start/stop button
Parking the vehicle
Starting the vehicle
Switching on the power supply / vehicle
Start/stop function
Starter battery
Charging via Remote Online
Starting assistance
Starting the engine
Remote Online
Start/stop button
Starting-off aid
Optimised acceleration
Station
Deleting
Entering a frequency directly
Frequency fix
Managing favourites
Moving
Setting

Storing

Station list

Calling up

Station presets

Editing

Station suggestion

Radio

Station tracking

Setting

Stationary heater/ventilation

Operation

Status display

Front passenger airbag

Rear seat belt

Steer Assist

Active Steering Assist

STEER CONTROL

STEER CONTROL

Steering

Rear axle steering

Steering wheel

Adjusting electrically

Driver's airbag

Maintenance

Manually adjusting

Memory function

Steering wheel adjustment

Steering wheel gearshift paddles

Steering wheel heater

- Air conditioning menu
- Decoupling from the seat heating

Stop/start

- ECO start/stop function

Stopping

- Parking the vehicle

Storing the

- speed, cruise control
- speed, DISTRONIC
- speed, limiter

Stowage areas

Stowage space under the boot floor

Stowage spaces

- Armrest (front)
- Centre console (front)
- Door
- Glove compartment

Suggestions

- Configuring
- Deleting

Sulphur content

Supersport menu display content

- Selecting

Suspension

- AIRMATIC
- AMG RIDE CONTROL
- DYNAMIC BODY CONTROL
- Selecting the suspension setting
- Setting the suspension level (AIRMATIC)

SVHC

- Substances of very high concern

Switch-off delay time

- Exterior
- Interior

Switching air-recirculation mode on/off

Switching loudness normalisation on/off

- Burmester® 4D surround sound system

System PIN protection

- Activating/deactivating

System settings

- Activating/deactivating system PIN protection
- MBUX reset function
- Setting the distance unit
- Setting the time zone
- Setting the time/date format
- Transmission of the vehicle position

T

Take-back of end-of-life vehicles

Tank content

- AdBlue®
- Fuel
- Fuel (Mercedes-AMG vehicles)
- Reserve
- Reserve (fuel), (Mercedes-AMG vehicles)

Tank filler cap / flap

Technical data

- Axle load (trailer operation)
- Axle load (trailer operation), (Mercedes-AMG vehicles)
- Fastening points of the trailer hitch
- High-voltage battery
- Information
- Maximum speeds
- Mounting dimensions of a trailer hitch
- Overhang dimension of the trailer hitch
- Radio frequencies
- Radio regulations
- Roof load
- Specific absorption rate (SAR)
- Tongue weight
- Tongue weight (Mercedes-AMG vehicles)
- Towing capacity

Trailer load (Mercedes-AMG vehicles)
Vehicle dimensions
Telediagnosis
Diagnostic data
Telediagnostics
Transferred data
Telemetry display
Telephone, Smartphone
Activating functions during a call
Authorising a mobile phone Remote Parking Assist
Calls with several participants
Changing a function
Connecting a mobile phone
Deleting a mobile phone
Emergency call
Incoming call during an existing call
Information
MBUX voice commands
Mobile phone usage
Notes
Secure Simple Pairing
Smartphone integration
Switching between mobile phones
Telephone menu overview
Telephone operation
Voice recognition
Wirelessly charging a(mobile phone, front)

Television, Digital TV
MBUX voice commands
Temperature
Adjustment (THERMATIC)
Adjustment (THERMOTRONIC)
Temperature (driver display)
Display
Temperature and airflow
Setting
THERMATIC
Air conditioning control panel
THERMOTRONIC
Air conditioning control panel
Through-loading feature
Tie-down eyes
Time
Manual time setting
Setting the time zone
Setting the time/date format
TIREFIT kit, Tyre inflation compressor
Declaration of conformity
Storage location (plug-in hybrid)
Tone settings
Information
Tongue weight
Tongue weight (Mercedes-AMG vehicles)
Top Tether

Topographical compensation, Predictive headlamp range control >
Torque (driver display)
Display >
Touch Control
Driver display >
MBUX >
Setting the sensitivity >
Touch-sensitive controls >
Touchscreen
Entering characters >
Tow bar system
Towing away >
Tow-away protection
Activating/deactivating >
Tow-starting >
Towing
Pulling/towing >
Towing eye
Fitting/removing >
Storage location >
Towing methods
Both axles on the ground >
Overview (plug-in hybrid) >
Track Pace
Menu (driver display) >
Track Race >

Traffic announcements (audio system)
Switching on/off
Traffic information
Car-to-X-Communication
Displaying the traffic map
Displaying traffic incidents
Extending a Live Traffic Information subscription
Information on Live Traffic Information
Overview
Registering Live Traffic Information
Traffic Jam Assistant
Traffic light view
Activating/deactivating
Function
Traffic restrictions
Activating/deactivating
Service
Traffic Sign Assist
Function
Setting
Trailer coupling
Trailer drawbar, Pulling/towing
Trailer hitch
Axle load
Axle load (Mercedes-AMG vehicles)
Bicycle rack

Care
Coupling up/uncoupling a trailer
Extending/retracting the ball neck
Extending/retracting the ball neck (MBUX multimedia system)
Fastening points
General notes
Mounting dimensions
Overhang dimension
Socket
Tongue weight
Tongue weight (Mercedes-AMG vehicles)
Towing capacity
Trailer load (Mercedes-AMG vehicles)
Trailer Manoeuvering Assist
Trailer Manoeuvering Assist
Function
Trailer Manoeuvring Assist, Manoeuvring assistant
Operation
Trailer operation
Active Blind Spot Assist
Active Lane Keeping Assist
Axle load
Bicycle rack
Coupling up/uncoupling a trailer
Extending/retracting the ball neck
Extending/retracting the ball neck (MBUX multimedia system)
Notes

Setting (MBUX multimedia system)
Socket
Trailer stabilisation
Transferred vehicle data
Android Auto
Apple CarPlay®
Transmission position display
Transmission positions
DIRECT SELECT lever
Transporting
Vehicle
Turn signal indicator
Turn signal light
TV
MBUX voice commands
Two-way radios
Frequencies
Installation
Transmission output
Type approval number EG
Tyre pressure
checking
Notes
TIREFIT kit
Tyre pressure table
Tyre pressure monitoring system
Function

Restarting
Tyre pressure table
Tyre sealant
Tyre tread
Tyre-change tool
Tyre-change tool kit
Tyres
Breakdown
Checking
Checking temperature
Fitting
Interchanging
Noise
Notes on fitting
Removing
Removing/installing hub caps
Replacing
Selection
Snow chains
Storing
TIREFIT kit
Tyre pressure table
Unusual handling characteristics

U

Unfastening

Units of measurement

Setting

Unlocking setting

Digital Vehicle Key

Unlocking/locking the vehicle

(NFC function)

Updating software, System update, Update

Error message

Information

Performing

USB port

Notes

Stowage compartments (front)

USB port (multimedia system)

Connecting mass storage devices

User profiles, Personalisation

Adding a user

Notes

Overview

Requirements for use

Selecting a user

Selecting options >
Synchronising >
User-specific content >

V

Variable limiter
Vehicle, Switching on the ignition
48 V on-board electrical system
Additional door lock
Collision detection (information)
Correct use
Data storage
Diagnostics connection
Emergency key
enabling, Remote Online
High-voltage on-board electrical system
Implied warranty
Information
KEYLESS-GO
lock automatically (MMS)
Lock/unlock (emergency key)
Locking/unlocking (from inside)
Lowering
Medical aids
Parking up
QR code rescue card
Raising
REACH regulation
Registration

Rocking free
Setting collision detection
Starting (start/stop button)
starting, emergency operation mode
Stopping
SVHC/substances of very high concern
Switching off
switching off (start/stop button)
Switching on (start/stop button)
Towing
Towing away
Transporting
Ventilation / convenience opening
Voice commands for MBUX voice assistant
Vehicle cameras
Vehicle data
Display, MBUX
Displaying, DYNAMIC SELECT
Maximum speeds
Roof load
Roof load (Mercedes-AMG vehicles)
Transferring to Android Auto
Transferring to Apple CarPlay®
Vehicle height
Vehicle height (Mercedes-AMG vehicles)
Vehicle length
Vehicle length (Mercedes-AMG vehicles)

Vehicle width
Vehicle width (Mercedes-AMG vehicle)
Wheelbase
Wheelbase (Mercedes-AMG vehicles)
Vehicle dimensions
Vehicle dimensions (Mercedes-AMG vehicles)
Vehicle emergency start
Vehicle identification number
Vehicle identification plate
Axle load
EU type approval number
Gross mass
Model type
Paint code
VIN
Vehicle interior
Cooling/heating (Remote Online)
Vehicle key
Vehicle level
AIRMATIC
Setting (AIRMATIC)
Vehicle location
Switching transmission on/off
Vehicle position
Storing
Vehicle sensors

Vehicle socket
Care
Indicator lamps
Vehicle start
Emergency operation mode
Remote Online
Start/stop button
Vehicle tool kit
TIREFIT kit (plug-in hybrid)
Towing eye
Ventilation
Vents
Air vents (front)
Video recordings
Gallery app
VIN
Engine compartment
Identification plate
Seat
Vision
Demisting windows
Voice assistant
Voice prompting
Voice recognition

W

Warning lamps/indicator lamps

Overview

Warning system

Warning triangle

Folding into position

removing

Warning/indicator lamp

ABS warning lamp

Active Brake Assist warning lamp

ATTENTION ASSIST warning lamp

Brakes warning lamp (red)

Brakes warning lamp (yellow)

Coolant warning lamp (red)

Coolant warning lamp (yellow)

Electric parking brake indicator lamp (red)

Electric parking brake indicator lamp (yellow)

Electrical fault warning lamp

Engine diagnostics warning lamp

Engine operating temperature warning lamp

ESP® OFF warning lamp

ESP® warning lamp flashes

ESP® warning lamp lights up

Fuel reserve warning lamp lights up

Mercedes-Benz emergency call system warning lamp

Occupant presence reminder warning lamp (white)
Occupant presence reminder warning lamp (yellow)
Power steering warning lamp (red)
Power steering warning lamp (yellow)
Rear axle steering warning lamp (red)
Rear axle steering warning lamp (yellow)
Reduced-power warning lamp
Restraint system warning lamp
Seat belt warning lamp flashes
Seat belt warning lamp lights up
Suspension warning lamp (red)
Suspension warning lamp (yellow)
System error warning lamp
Traffic Sign Assist warning lamp
Trailer hitch warning lamp
Tyre pressure monitoring system warning lamp flashes
Tyre pressure monitoring system warning lamp lights up
Warning lamp for distance warning
Warning/indicator lamps
PASSENGER AIR BAG
Washer fluid
Topping up
Windscreen washer fluid
Washing by hand
Water tank
Wear
Limited protection

Weather information
Website
Mercedes-Benz Connect
Setting up a Wi-Fi hotspot
Weight information
Welcome
Wheel change
Fitting a new wheel
Lowering the vehicle
Preparation
Raising the vehicle
Removing a wheel
Removing/fitting hub caps
Wheel rotation
Wheels
Breakdown
Care
Checking
Checking tyre temperature
Fitting
Interchanging
Noise
Notes on fitting
Removing
Removing/installing hub caps
Replacing
Selection

Snow chains
Storing
TIREFIT kit
Tyre pressure
Tyre pressure monitoring system
Unusual handling characteristics

Wi-Fi

Activating/deactivating
Information on connection
Setting up a hotspot
Setting up an Internet connection

Window airbag

Deployment

Windows

Care
Convenience opening
De-icing
Opening with the key
Opening/closing
Opening/closing (air recirculation button)
Rear window
Removing mist
Roller sunblind
Window films

Windscreen

De-icing
Demist (THERMATIC)

Demisting (THERMOTRONIC)

Windscreen washer fluid

Windscreen washer system

Windscreen wipers

Activating/deactivating

Replacing the wiper blades

Replacing the wiper blades (windscreen)

Winter operation

Activating/deactivating snow chain mode

Snow chains

Winter tyres

Limiter

Setting the permanent speed limit

Wiper blades

Care

Replacing (windscreen)

Wiper fluid

Notes

Wipers

Wireless applications

Wireless charging

Mobile phone (front)

Workout programmes

Overview

Workshop

Z

Zero layer

- Function
- Overview

Publication details

WEBSITE
Further information about Mercedes-Benz vehicles and about Mercedes-Benz AG can be found on the following websites:

https://www.mercedes-benz.com

https://group.mercedes-benz.com

EDITORIAL TEAM
You are welcome to forward any queries or suggestions you may have regarding this Owner's Manual to the technical editorial team at the following address:

Mercedes-Benz AG, HPC: CAC, Customer Service, 70546 Stuttgart, Germany

© Mercedes-Benz AG: Not to be reprinted, translated or otherwise reproduced, in whole or in part, without written permission from Mercedes-Benz AG.

VEHICLE MANUFACTURER
Mercedes-Benz AG

Mercedesstraße 120

70372 Stuttgart, Germany

F214 0191 02