Disclaimer
The following online version of the Owner's Manual describes all models as well as all the standard and optional equipment of your vehicle. Country-specific differences in the language variants are possible. Note that your vehicle may not be fitted with all features described. This is also the case for safety-relevant systems and functions. Please contact your authorised Mercedes-Benz dealer if you would like to have a printed Owner's Manual for other vehicle models and vehicle model years. The online version is the current valid Owner's Manual version. Possible variations to your vehicle may not be taken into account as Mercedes-Benz constantly updates their vehicles and equipment to the state of the art and introduces changes in design and equipment.
Please also read the printed Owner's Manual, any supplementary documents and the digital Owner's Manual in the vehicle.

Copyright
All Rights Reserved. All texts, images, graphics, are subject to Copyright and other laws for the protection of intellectual property. They may not be copied for commercial purposes or for transmission, nor changed and used on other websites.



Mercedes-Benz



A-Class

Owner's Manual

Mercedes-Benz

Front passenger airbag warning



WARNING Risk of injury or fatal injuries if the front passenger airbag is enabled

If the front passenger front airbag is enabled, a child on the front passenger seat may be struck by the front passenger airbag during an accident.

NEVER use a rearward-facing child restraint system on a seat with an ENABLED FRONT AIRBAG, DEATH or SERIOUS INJURY to the CHILD can occur.

Observe the chapter "Children in the vehicle".

Thank you for purchasing a Mercedes-Benz

Before you first drive off, read this Owner's Manual carefully and familiarise yourself with your vehicle. For your own safety and a longer operating lifespan of the vehicle, follow the instructions and warning notices in this Owner's Manual. Disregarding them may lead to damage to the vehicle or injury to people.

The standard equipment and product description of your vehicle may vary and depends on the following factors:

- model
- order
- national version
- availability

The illustrations in this Owner's Manual show a left-hand drive vehicle. On right-hand-drive vehicles, the layout of car parts and control elements differs accordingly.

Mercedes-Benz is constantly developing its vehicles further.

Mercedes-Benz therefore reserves the right to introduce changes in the following areas:

- Design
- Equipment
- Technical features

The equipment in your vehicle may therefore differ from that shown in the descriptions and illustrations.

The following documents are integral parts of the vehicle:

- Digital Owner's Manual
- printed Owner's Manual
- service booklet
- equipment-dependent Supplements

Keep these documents in the vehicle at all times. If you sell the vehicle, always pass all of the documents on to the new owner.

1775847506Z102



Symbols **5**

At a glance **6**
Cockpit 6
Indicator and warning lamps (standard) 10
Indicator and warning lamps (widescreen cockpit) 12
Overhead control panel 14
Door control panel and seat adjustment 16
Emergencies and breakdowns 18

Digital Owner's Manual **20**
Calling up the Digital Owner's Manual 20

General notes **22**
Protection of the environment 22
Take-back of end-of-life vehicles 22
Mercedes-Benz GenuineParts 23
Owner's Manual 24
Operating safety 24
Declaration of Conformity 25
Diagnostics connection 30
Qualified specialist workshop 31
Vehicle registration 31
Correct use of the vehicle 31
Information on the REACH regulation 32
Implied warranty 32
QR code for rescue card 32
Data storage 32
Copyright 35

Occupant safety **36**
Restraint system 36
Seat belts 38
Airbags 43
PRE-SAFE® system 50
Safely transporting children in the vehicle 52
Notes on pets in the vehicle 76

Opening and closing **78**
Key 78
Doors 82
Load compartment 88
Side windows 90
Sliding sunroof 94
Anti-theft protection 99

Seats and stowing **102**
Notes on the correct driver's seat position 102
Seats 103
Steering wheel 108
Easy entry and exit feature 109
Operating the memory function 110
Stowage areas 112
Cup holders 123
Ashtray and cigarette lighter 127
Sockets 128
Wireless charging of the mobile phone and connection with the exterior aerial 131
Fitting/removing the floor mats 133

Light and sight **134**
Exterior lighting 134
Interior lighting 142
Changing bulbs (only for vehicles with halogen headlamps) 143
Windscreen wipers and windscreen washer system 146
Mirrors 150
Operating the sun visors 153

Climate control **154**
Overview of climate control systems 154
Operating the climate control system 155

Driving and parking **164**
Driving 164
DYNAMIC SELECT switch 174
Manual transmission 177
Automatic transmission 178
Function of the 4MATIC 184
Refuelling 185
Parking 191
Driving and driving safety systems 201
Trailer hitch 261
Bicycle rack function 264
Vehicle towing instructions 266

Instrument Display and on-board computer **267**
Instrument display overview 267
Overview of the buttons on the steering wheel 268
Operating the on-board computer 269
Adjusting the design of the instrument display 270
Showing display content on the instrument cluster 271
Overview of displays on the multifunction display 272
Adjusting the instrument lighting 273
Menus and submenus 273
Head-up Display 280

LINGUATRONIC **282**
Notes on operating safety 282
Operation 283
Using LINGUATRONIC effectively 285
Essential voice commands 286

MBUX multimedia system **302**
Overview and operation 302
System settings 336
Fit & Healthy 345
Navigation 351
Telephone 397
Online and Internet functions 429
Media 438
Radio 447
Sound 450

Maintenance and care **454**
ASSYST PLUS service interval display 454
Engine compartment 455
Cleaning and care 461

Breakdown assistance **471**
Emergency 471
Flat tyre 473
Battery (vehicle) 479
Tow-starting or towing away 484
Electrical fuses 490

Wheels and tyres **493**
Notes on noise or unusual handling characteristics 493
Notes on regularly inspecting wheels and tyres 493
Notes on snow chains 494
Tyre pressure 494
Wheel change 503

Emergency spare wheel 513
Collapsible spare wheel 516

Technical data 519
Notes on technical data 519
On-board electronics 519
Vehicle identification plate, VIN and engine number overview 521
Operating fluids 523
Vehicle data 532
Trailer hitch 533

Display messages and warning/indicator lamps 537
Display messages 537
Warning and indicator lamps 593

Index 609

In this Owner's Manual, you will find the following symbols:

DANGER Danger due to not observing the warning notices

Warning notices draw your attention to hazards that may endanger your health or life, or the health or life of others.

▶ Observe the warning notices.

ENVIRONMENTAL NOTE Environmental damage due to failure to observe environmental notes

Environmental notes include information on environmentally responsible behaviour or environmentally responsible disposal.

▶ Observe environmental notes.

NOTE Damage to property due to failure to observe notes on material damage

Notes on material damage inform you of risks which may lead to your vehicle being damaged.

▶ Observe notes on material damage.

ⓘ Useful instructions or further information that could be helpful to you.

▶ Instruction

(→ page) Further information on a topic

Display Information on the multifunction display/media display

↴▶ Highest menu level, which is to be selected in the multimedia system

▶▶ Corresponding submenus, which are to be selected in the multimedia system

* Marks a cause

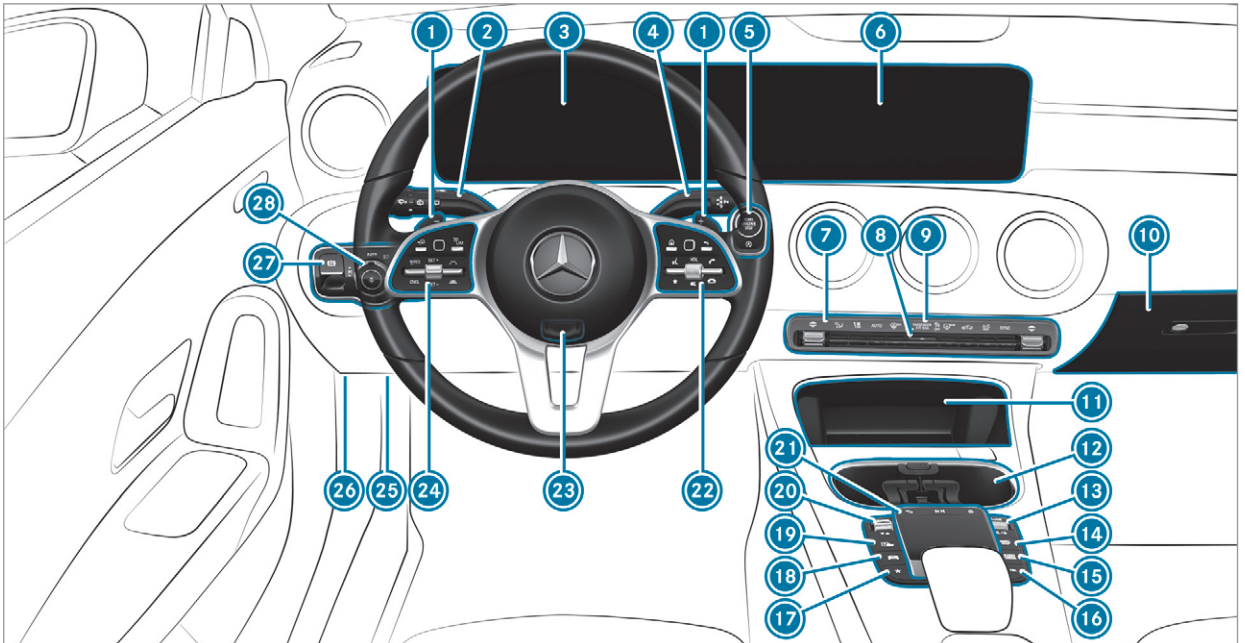

Left-hand drive vehicles

1 Steering wheel gearshift paddles	→	181
2 Combination switch	→	136
3 Instrument display	→	267
4 DIRECT SELECT lever	→	178
5 Start/stop button	→	165
ECO start/stop function	→	173
6 Media display	→	305
7 Climate control systems	→	155
8 Hazard warning light system	→	137
9 PASSENGER AIR BAG indicator lamps	→	48
10 Glove compartment	→	113
11 Stowage compartment	→	113
12 Cup holder	→	123
13 Control knob for:		
Volume and switching sound on/off	→	302
Switching the MBUX multimedia system on/off	→	302
14 Calls up navigation	→	351
15 Calls up the radio	→	448
Calls up media	→	441
16 Calls up the telephone	→	399
17 Calls up favourites	→	323
18 Calls up vehicle functions	→	315
19 Active Parking Assist	→	245
20 DYNAMIC SELECT switch	→	175
21 Touchpad	→	305
22 Control panel for the MBUX multimedia system	→	268
23 Adjusts the steering wheel	→	108
24 Control panel:		
On-board computer	→	268
Cruise control or variable limiter	→	214
Active Distance Assist DISTRONIC	→	218
25 Diagnostics connection	→	30

26	Opens the bonnet	→	456
27	Electric parking brake	→	197
28	Light switch	→	134

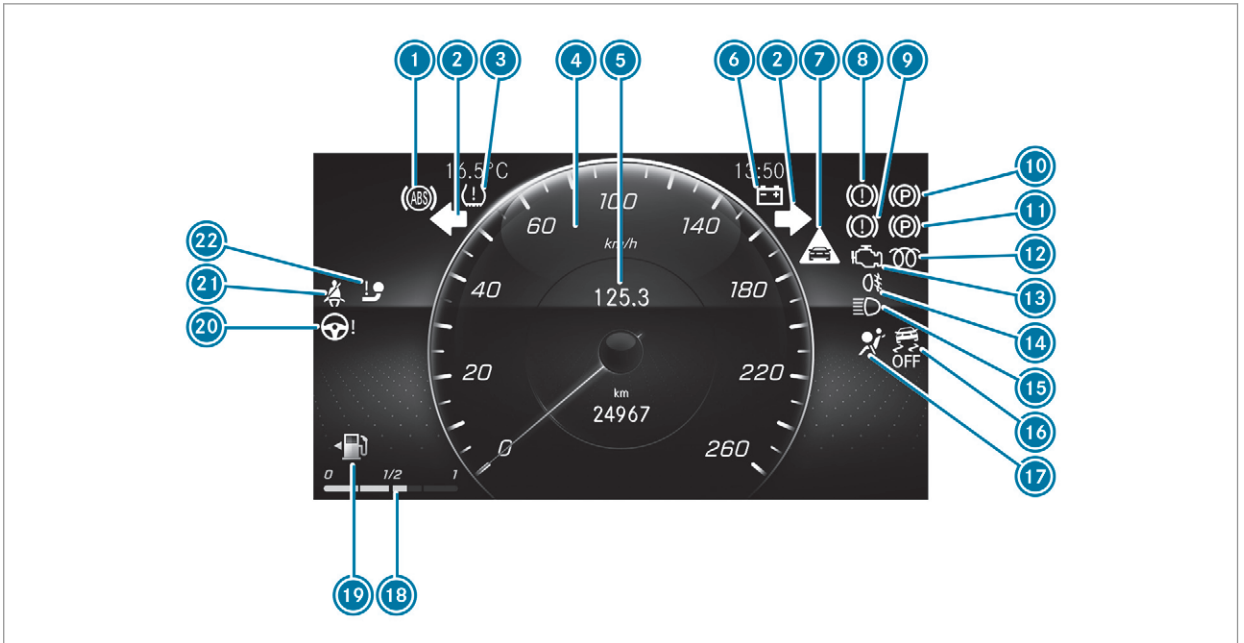

Instrument display (standard)

1	ABS malfunction	→	604
2	Turn signal light	→	136
3	Tyre pressure monitor	→	607
4	Speedometer	→	267
5	Multifunction display	→	272
6	Electrical fault	→	598
7	Distance warning	→	603
8	Brakes (yellow)	→	601
9	Brakes (red)	→	601
10	Electric parking brake (yellow)	→	601
11	Electric parking brake applied (red)	→	601
12	Diesel engine: preglow		
13	Engine diagnostics	→	598
14	Rear fog light	→	135
15	High beam	→	136
	Low beam	→	134
	Standing lights	→	134
16	ESP® OFF	→	604
	ESP®	→	604
17	Restraint system	→	595
18	Fuel level indicator		
19	Fuel reserve with fuel filler cap location indicator	→	598
20	Electric power steering malfunction	→	596
21	Seat belt not fastened	→	595
22	Trailer hitch not operational	→	596

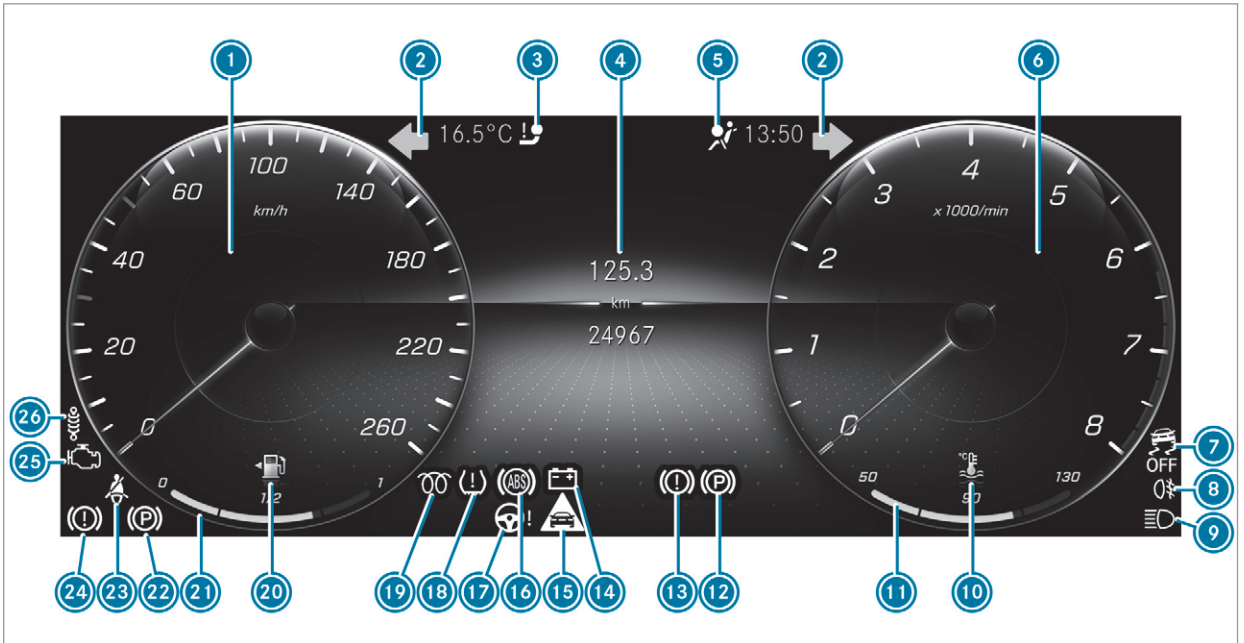

Widescreen cockpit instrument display

1	Speedometer	→	267
2	Turn signal lights	→	136
3	Trailer hitch not operational	→	596
4	Multifunction display	→	272
5	Restraint system	→	595
6	Rev counter	→	267
7	ESP® OFF	→	604
	ESP®	→	604
8	Rear fog light	→	135
9	High beam	→	136
	Low beam	→	134
	Standing lights	→	134
10	Coolant too hot/cold	→	598
11	Coolant temperature display	→	267
12	Electric parking brake (yellow)	→	601
13	Brakes (yellow)	→	601
14	Electrical fault	→	598
15	Distance warning	→	603
16	ABS malfunction	→	604
17	Electric power steering malfunction	→	596
18	Tyre pressure monitor	→	607
19	Diesel engine: preglow		
20	Fuel reserve with fuel filler cap location indicator	→	598
21	Fuel level indicator		
22	Electric parking brake applied (red)	→	601
23	Seat belt not fastened	→	595
24	Brakes (red)	→	601
25	Engine diagnostics	→	598
26	This indicator lamp has no function		

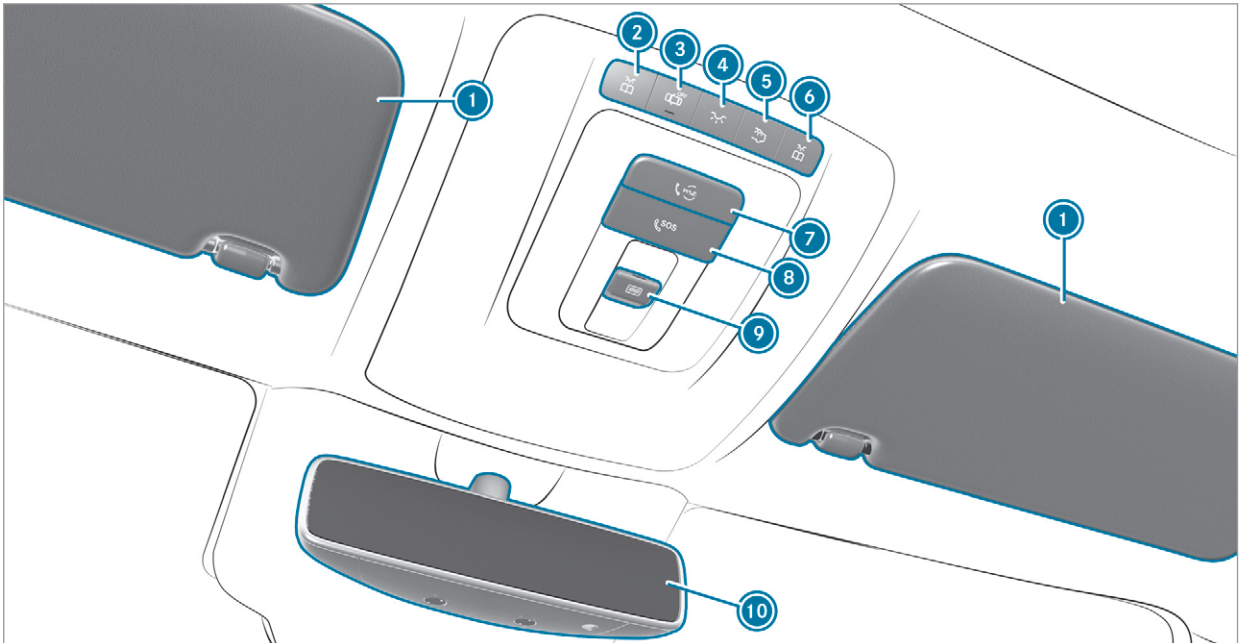
1
2
3
4
5
6
7
8
9
10
1
SOS

1	Sun visors	→	153
2	Switches the left-hand reading lamp on/off	→	142
3	Switches automatic interior lighting control on/off	→	142
4	Switches the front interior lighting on/off	→	142
5	Switches the rear interior lighting on/off	→	142
6	Switches the right-hand reading lamp on/off	→	142
7	me button	→	421
8	SOS button	→	421
9	Opens/closes the panorama sliding sunroof	→	94
	Opens/closes the roller sunblind	→	94
10	Inside rearview mirror	→	151

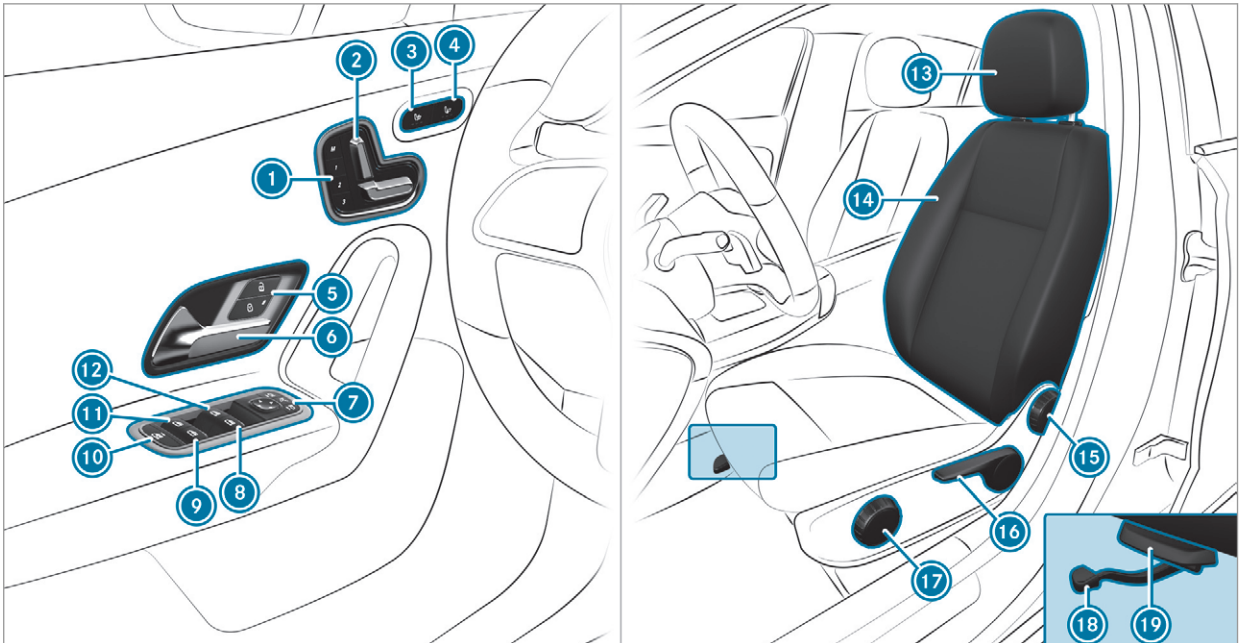
1
2
3
4
5
6
7
8
9
10
11
12
13
14
15
16
17
18
19

1	Operates the memory function	→	110
2	Adjusts the seats electrically	→	103
3	Switches the seat heating on/off	→	106
4	Switches the seat ventilation on/off	→	107
5	Locks/unlocks the vehicle	→	83
6	Opens the door	→	83
7	Operates the outside mirrors	→	150
8	Opens/closes the right side window	→	90
9	Opens/closes the rear right side window	→	90
10	Child safety lock for the rear side windows	→	76
11	Opens/closes the rear left side window	→	90
12	Opens/closes the left side window	→	90
13	Adjusts the head restraints	→	104
14	Configures the seat settings	→	106
15	Adjusts the seat backrest inclination	→	103
16	Adjusts the seat height	→	103
17	Adjusts the seat cushion inclination	→	103
18	Sets the seat fore-and-aft position	→	103
19	Adjusts the seat cushion length	→	103

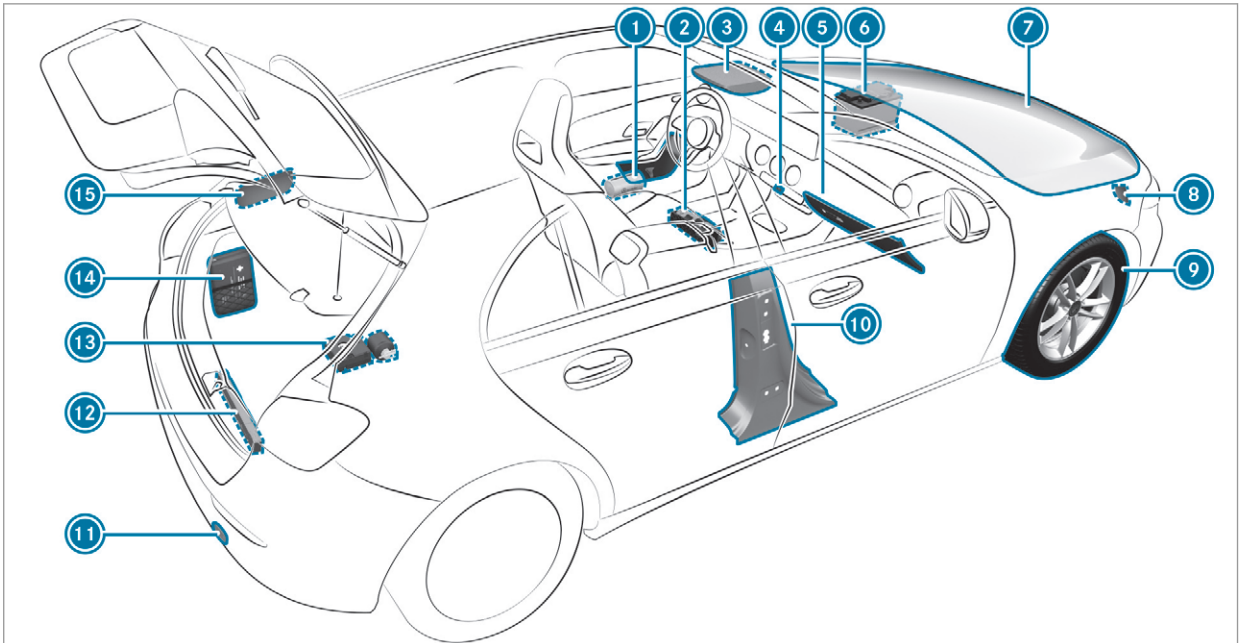
1
2
3
4
5
6
7
8
9
10
11
12
13
14
15

1	Safety vests	→	471
2	Fire extinguisher	→	472
3	me button and SOS button	→	421
4	Hazard warning lights	→	137
5	Stowage compartment for customer literature	→	113
6	Starting assistance	→	483
7	To check and top up operating fluids	→	523
8	To tow-start and tow away	→	485
9	Flat tyre	→	473
10	QR code for accessing the rescue card	→	32
11	To tow-start and tow away	→	485
12	Warning triangle	→	471
13	TIREFIT kit	→	475
14	First-aid kit (soft sided)	→	472
15	Fuel filler flap with instruction labels for tyre pressure, fuel type and QR code for accessing the rescue card	→	185

Calling up the Digital Owner's Manual

Multimedia system:

→ ⌂ ⏩ Info ⏩ Owner's Manual ⏩ ⓘ



The Digital Owner's Manual describes the function and operation of:

- the vehicle
- the multimedia system

► Select one of the following menu items in the Digital Owner's Manual:

- Search: search for keywords in order to find quick answers to questions about the operation of the vehicle.
- Quick start: find the first steps towards setting up your vehicle.
- Tips: find information that prepares you for certain everyday situations with your vehicle.
- Messages: receive additional information about the messages in the instrument display.
- Bookmarks: gain access to your personally saved bookmarks.
- Language: select the language for the Digital Owner's Manual.

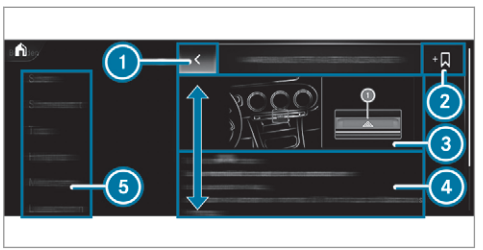

① Back
② Adds bookmarks
③ Picture
④ Contents section
⑤ Menu

Some sections in the Digital Owner's Manual, e.g. warning notes, can be opened and closed.

Additional methods of calling up the Digital Owner's Manual:

Direct access: open the required content in the Digital Owner's Manual by pressing and holding an entry on the tab bar in the multimedia system:

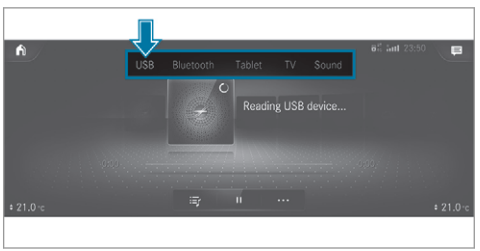

Instrument display: call up brief information as display messages in the instrument cluster.

LINGUATRONIC: call up via the voice control system

Global search: call up search results for contents of the Digital Owner's Manual in the home screen

For safety reasons, the Digital Owner's Manual is deactivated while driving.

ⓘ The Owner's Manual can also be found in the Mercedes-Benz Guides App in all common app stores.

Protection of the environment

Plug-in hybrid: observe the notes in the Supplement. Otherwise, you may fail to recognise dangers.

ENVIRONMENTAL NOTE Environmental damage due to operating conditions and personal driving style

The pollutant emission of the vehicle is directly related to the way you operate the vehicle.

Operate your vehicle in an environmentally responsible manner to help protect the environment. Please observe the following recommendations on operating conditions and personal driving style.

Operating conditions:

- Make sure that the tyre pressure is correct.
- Do not carry any unnecessary weight (e.g. roof luggage racks once you no longer need them).
- Adhere to the service intervals. A regularly serviced vehicle will contribute to environmental protection.
- Always have maintenance work carried out at a qualified specialist workshop.

Personal driving style:

- Do not depress the accelerator pedal when starting the engine.
- Do not warm up the engine while the vehicle is stationary.
- Drive carefully and maintain a suitable distance from the vehicle in front.
- Avoid frequent, sudden acceleration and braking.
- Change gear in good time and use each gear only up to ⅔ of its maximum engine speed.
- Switch off the engine in stationary traffic, e.g. by using the ECO start/stop function.
- Drive fuel-efficiently. Observe the ECO display for a fuel-efficient driving style.

Take-back of end-of-life vehicles

EU countries only:
Mercedes-Benz will take back your end-of-life vehicle for environment-friendly disposal in accordance with the European Union (EU) End-of-Life Vehicles Directive.

A network of vehicle take-back points and dismantlers has been established for you to return your vehicle. You can leave it at any of these points free of charge. This makes an important contribution to closing the recycling circle and conserving resources.

For further information about the recycling and disposal of end-of-life vehicles, and the take-back conditions, please visit the national Mercedes-Benz website for your country.

Mercedes-Benz GenuineParts

ENVIRONMENTAL NOTE Environmental damage caused by not using recycled reconditioned components

Daimler AG offers recycled reconditioned components and parts with the same quality as new parts. The same entitlement from the implied warranty is valid as for new parts.

- Use recycled reconditioned components and parts from Daimler AG.

NOTE Impairment of the operating efficiency of the restraint systems from installing accessory parts or from repairs or welding

Airbags and seat belt tensioners, as well as control units and sensors for the restraint systems, may be installed in the following areas of your vehicle:

- doors
- door pillars
- door sills
- seats
- cockpit
- instrument cluster
- centre console
- lateral roof frame

- Do not install accessory parts such as audio systems in these areas.
- Do not carry out repairs or welding.
- Have accessories retrofitted at a qualified specialist workshop.

You could jeopardise the operating safety of your vehicle if you use parts, tyres and wheels as well as accessories relevant to safety which have not been approved by Mercedes-Benz. Safety-relevant systems, e.g. the brake system, may malfunction. Only use Mercedes-Benz Genuine Parts or parts of equal quality. Only use tyres, wheels and accessories that have been specifically approved for your vehicle model.

Mercedes-Benz tests original parts and conversion parts and accessories that have been specifically approved for your vehicle model for their reliability, safety and suitability. Despite ongoing market research, Mercedes-Benz is unable to assess other parts. Mercedes-Benz therefore accepts no responsibility for the use of such parts in Mercedes-Benz vehicles, even if they have been officially approved or independently approved by a testing centre.

Certain parts are only officially approved for installation or modification if they comply with legal requirements. All Mercedes-Benz Genuine Parts meet the approval requirements. The use of non-approved parts may invalidate the vehicle's general operating permit.

This is the case in the following situations:

- the vehicle type is different from that for which the vehicle's general operating permit was granted.
- other road users could be endangered.
- the exhaust gas or noise level gets worse.

Always specify the vehicle identification number (VIN) (→ page 521) when ordering Mercedes-Benz Genuine Parts.

Owner's Manual

This Owner's Manual describes all models and all standard and optional equipment available for your vehicle at the time of this Owner's Manual going to press. Country-specific differences are possible. Note that your vehicle may not be fitted with all features described. This is also the case for systems and functions relevant to safety. Therefore, the equipment on your vehicle may differ from that in the descriptions and illustrations.

The original purchase agreement for your vehicle contains a list of all of the systems in your vehicle.

Should you have any questions concerning equipment and operation, please consult a Mercedes-Benz Service Centre.

The Owner's Manual and Service Booklet are important documents and should be kept in the vehicle.

Operating safety

Plug-in hybrid: observe the notes in the Supplement. Otherwise, you may fail to recognise dangers.

⚠ **WARNING** Risk of accident due to malfunctions or system failures

If you do not have the prescribed service/maintenance work or any required repairs carried out, this could result in malfunctions or system failures.

- Always have the prescribed service/maintenance work as well any required repairs carried out at a qualified specialist workshop.

⚠ **WARNING** Risk of accident and injury as a result of incorrect modifications to electronic component parts

Modification to electronic components, their software or wiring could impair their function and/or the function of other networked component parts. In particular, systems relevant to safety could also be affected.

As a result, they may no longer function as intended and/or endanger the operating safety of the vehicle.

- Never tamper with the wiring and electronic component parts or their software.
- You should have all work on electrical and electronic components carried out at a qualified specialist workshop.

If you modify the on-board electronics, the general operating permit is rendered invalid.

Observe the "On-board electronics" section in "Technical data".

⚠ **WARNING** Risk of fire due to flammable materials on hot parts of the exhaust system

Flammable material such as leaves, grass or twigs may ignite if they come into contact with hot parts of the exhaust system.

- When driving on unpaved roads or off-road, regularly check the vehicle underside.
- Remove trapped plants or other flammable material, in particular.
- If there is damage, consult a qualified specialist workshop immediately.

! NOTE Damage to the vehicle

In the following situations, in particular, there is a risk of damage to the vehicle:

- the vehicle becomes grounded, e.g. on a high kerb or an unpaved road
- the vehicle is driven too fast over an obstacle, e.g. a kerb, speed bump or pothole
- a heavy object strikes the underbody or chassis components

In situations such as this, the body, the underbody, chassis components, wheels or tyres could be damaged without the damage being visible. Components damaged in this way can unexpectedly fail or, in the case of an accident, may not absorb the loads that arise as intended.

If the underbody panelling is damaged, flammable materials such as leaves, grass or twigs can collect between the underbody and the underbody panelling. These materials may ignite if they come into contact with hot parts on the exhaust system.

- Have the vehicle checked and repaired immediately at a qualified specialist workshop.

or

- If driving safety is impaired while continuing your journey, pull over and stop the vehicle immediately in accordance with the traffic conditions, and contact a qualified specialist workshop.

Declaration of Conformity

Electromagnetic compatibility

The electromagnetic compatibility of the vehicle components has been checked and certified according to the currently valid version of Regulation UN R10.

Wireless vehicle components

EU and EFTA countries only:

The following information applies to all wireless components of the vehicle and of the information systems and communication devices integrated into the vehicle:

The wireless components of this vehicle comply with the basic requirements and all other relevant conditions of Directive 2014/53/EU. You can obtain further information from a Mercedes-Benz Service Centre.

Below are the addresses of the manufacturers of wireless components. The addresses cannot be displayed on the equipment due to its size or type.

Brazil only:
Note on the two-way radio systems in the vehicle:

These systems are not protected from harmful interference and must not cause interference in duly approved systems.

Nigeria only:
The connection and use of two-way radios in this vehicle is not permitted by the Nigerian Communications Commission.

Thailand only:
The radio-based wireless components in this vehicle meet the requirements of the National Broadcasting and Telecommunications Commission (NBTC).

Tyre pressure monitoring sensors
Schrader Electronics Ltd, 11 Technology Park, Belfast Road, Antrim BT41 1QS, Northern Ireland

Remote locking system
Marquardt GmbH, Schloßstraße 16, 78604 Rietheim, Germany

Huf Hülsbeck & Fürst GmbH & Co. KG, Steeger Straße 17, 42551 Velbert, Germany

Hella KGaA Hueck & Co., Rixbecker Straße 75, 59552 Lippstadt, Germany

Remote locking system control unit
Marquardt GmbH, Schloßstraße 16, 78604 Rietheim, Germany

Leopold Kostal GmbH & Co. KG, Hauert 11, 44227 Dortmund, Germany

Continental Automotive GmbH, Siemensstraße 12, 93055 Regensburg, Germany

Antenna modules
Hirschmann Car Communication GmbH, Stuttgarter Straße 45-51, 72654 Neckartenzlingen, Germany

Kathrein Automotive GmbH & Co. KG, Römerring 1, 31137 Hildesheim, Germany

Door handles with near-field communication function
Huf Hülsbeck & Fürst GmbH & Co. KG, Steeger Straße 17, 42551 Velbert, Germany

Garage door openers
GenteX Corporation, 600 North Centennial Street, Zeeland MI 49464, USA

Sensor for interior monitoring
META Systems, Via Galimberti 9, 42124 Reggio Emilia, Italy

Radar sensors
Autoliv Electronics ASP Inc., 26545 American Drive, Southfield, MI 48034, USA

ADC Automotive Distance Control Systems GmbH, Peter-Dornier-Strasse 10, 88131 Lindau, Germany

Robert Bosch GmbH, Daimlerstrasse 6, 71229 Leonberg, Germany

Mobile communication and telematics
Harman Becker Automotive Systems GmbH, Postfach 2260, 76303 Karlsbad, Germany

Panasonic Automotive & Industrial Systems Europe GmbH, Robert-Bosch-Strasse 27-29, 63225 Langen, Germany

Mitsubishi Electric Corporation, 2-3-33 Miwa, Sanda-City, 669-1513 Hyogo, Japan

Wireless headphones
Harman Becker Automotive Systems GmbH, Postfach 2260, 76303 Karlsbad, Germany

Remote control
Ruwido Austria GmbH, Köstendorfer Strasse 8, 5202 Neumarkt, Austria

Valeo, 43 rue Bayen, 75017 Paris, France

Heater booster function remote control
Digades GmbH, Äußere Weberstrasse 20, 02763 Zittau, Germany

Wireless applications in the vehicle
Besides the typical frequencies for mobile communications, Mercedes-Benz vehicles use the following wireless applications.

Wireless applications in the vehicle

Technology	Frequency range	Transmission output/magnetic field strength
Remote locking system	20 kHz (9–90 kHz)	≤ 72 dBµA/m at 10 m
Remote locking system	125 kHz (119–135 kHz)	≤ 42 dBµA/m at 10 m
Near-field communication	13.553–13.567 MHz	≤ 42 dBµA/m at 10 m
Remote locking system, garage door opener, tyre pressure monitor	433 MHz (433.05–434.79 MHz)	≤ 10 mW e.r.p.
Heater booster function remote control, garage door opener	868 MHz (868.0–868.6 MHz)	≤ 25 mW e.r.p.
Heater booster function remote control, garage door opener	869 MHz (868.7–869.2 MHz)	≤ 25 mW e.r.p.
Bluetooth®, Kleer, RLAN, remote controls, wireless headphones	2.4 GHz ISM band (2400–2483.5 MHz)	≤ 100 mW e.i.r.p.

Technology	Frequency range	Transmission output/magnetic field strength
Sensor for interior monitoring, RLAN	5.8 GHz UNII-3 (5725–5875 MHz)	≤ 25 mW e.i.r.p.
24 GHz ISM radar	24.05–24.25 GHz*	≤ 100 mW e.i.r.p.
24 GHz UWB radar	24.25–26.65 GHz*	≤ -41.3 dBm/MHz e.i.r.p mean ≤ 0 dBm/50 MHz e.i.r.p. peak
76 GHz radar	76–77 GHz	≤ 55 dBm peak e.i.r.p.
	* Model series launched on the market before April 2016.	
Carsharing module	NFC: 13.553–13.567 MHz Bluetooth: 2402–2480 MHz	NFC: ≤ 42 dBµA/m at 10 m Bluetooth: ≤ +4 dBm (power category 2)

Radio operating permit for antenna amplifier

Radio equipment approval number RKE213E1

Country	Radio equipment approval number
Argentina	CNC COMISIÓN NACIONAL DE COMUNICACIONES Registrierungsnummer: H-15475 Produktname: Verstärker Modell:RKE213E1 Hersteller: "KATHREIN Automotive GmbH" Adresse: Römerring 1, 31137 Hildesheim, Germany Firma: "KATHREIN Automotive Portugal, Sociedade Unipessoal, Lda" Adresse: Parque Industrial Constantim, 5000-082 Vila Real, Portugal

Jack

Copy and translation of the original declaration of conformity:

EC declaration of conformity

1.

The signatory, as a representative

Manufacturer:

BRANO a.s.

74741 Hradec nad Moravicí, Opavská 1000,

Czech Republic

ID No.: 64-387-5933

VAT Reg. No.: CZ64-387-5933

declares, as our sole responsibility, that the product:

2. a)

Designation:

Jack

Type, number:

A) A 164 580 02 18, A 166 580 01 18

B) A 240 580 00 18

C) A 639 580 02 18

Year of manufacture: 2015

Fulfils all relevant conditions

Directive No. 2006/42/EC

b)

Description and purpose of use:

The jack is only intended for raising the specified vehicle in accordance with the operating instructions affixed to the jack.

3.

Reference data of the harmonised standards or specifications

A) ISO 4063, EN ISO 14341-A, DBL 7382.20, MBN 10435, AS 2693

B) ISO 4063, ISO 14341-A, DBL 7392.10, MBN 10435

C) DBL 7392.10, DBL 8230.10

The technical documentation of the product is stored at the manufacturer's plant. Representative for the compilation of the technical documentation: Director of the Technical Department Brano a.s.

4.
Hradec nad Moravicí
City
5.
05.05.2015
Date
Signed by
Director of Quality

TIREFIT kit

Copy and translation of the original declaration of conformity:

EC declaration of conformity

In accordance with EC Directive 2006/42/EC
We hereby declare that the product
Product designation: Daimler electric air pump
Model designation: 0851ve, DT/UW 200046
MB part no.: A 000 583 8200
complies with the following relevant regulations:
2004/108/EC
Applied harmonised standards, in particular:
DIN EN 55014-1
DIN EN 55014-2:2009-06
Manufacturer: Dunlop Tech GmbH
Address: Birkenhainerstrasse 77, 63450 Hanau, Germany
Authorised representative: IMS dept.
Date: June 2015
Signature: IMS-AM, IMS-AE-L

Diagnostics connection

The diagnostics connection is only intended for the connection of diagnostic devices at a qualified specialist workshop.

⚠ **WARNING** Risk of accident due to connecting devices to the diagnostics connection

If you connect equipment to a diagnostics connection in the vehicle, it may affect the operation of vehicle systems.
As a result, the operating safety of the vehicle could be affected.

- Only connect the vehicle diagnostics connection to devices which have been tested with regard to their use and are considered safe.

⚠ **WARNING** Risk of accident due to objects in the driver's footwell

Objects in the driver's footwell may impede pedal travel or block a depressed pedal.

This jeopardises the operating and road safety of the vehicle.

- Stow all objects in the vehicle securely so that they cannot get into the driver's footwell.
- Always fit the floor mats securely and as prescribed in order to ensure that there is always sufficient room for the pedals.
- Do not use loose floor mats and do not place floor mats on top of one another.

! NOTE Battery discharging from using devices connected to the diagnostics connection

Using devices at the diagnostics connection drains the battery.

- ▶ Check the charge level of the battery.
- ▶ If the charge level is low, charge the battery, e.g. by driving a considerable distance.

Connecting equipment to the diagnostics connection can lead to emissions monitoring information being reset, for example. This may lead to the vehicle failing to meet the requirements of the next emissions inspection during the main inspection.

Qualified specialist workshop

Plug-in hybrid: observe the notes in the Supplement. Otherwise, you may fail to recognise dangers.

A qualified specialist workshop has the necessary special skills, tools and qualifications to correctly carry out any necessary work on your vehicle. This particularly applies to safety-relevant works.

Always have the following work carried out on your vehicle at a qualified specialist workshop:

- safety-relevant works
- service and maintenance work
- repair work
- modifications as well as installations and conversions
- work on electronic components

Mercedes-Benz recommends a Mercedes-Benz service centre.

Vehicle registration

Mercedes-Benz may ask its service centres to carry out technical inspections on certain vehicles. The quality or safety of the vehicle is improved as a result of the inspection.

Mercedes-Benz can only inform you about vehicle checks if Mercedes-Benz has your registration data.

It is possible that your vehicle has not yet been registered in your name in the following cases:

- if your vehicle was not purchased at an authorised specialist dealer.
- if your vehicle has not yet been examined at a Mercedes-Benz service centre.

It is advisable to register your vehicle with a Mercedes-Benz service centre.

Inform Mercedes-Benz as soon as possible about any change in address or vehicle ownership. You can do this at a Mercedes-Benz service centre, for example.

Correct use of the vehicle

If you remove any warning stickers, you or others could fail to recognise certain dangers. Leave warning stickers in position.

Observe the following information in particular when driving your vehicle:

- the safety notes in this manual
- technical data for the vehicle
- traffic rules and regulations

- laws and safety standards pertaining to motor vehicles

Information on the REACH regulation

EU and EFTA countries only:

The REACH regulation (Regulation (EC) No. 1907/2006, Article 33) stipulates a duty to supply information about substances of very high concern (SVHCs).

Daimler AG acts to the best of its knowledge to prevent these SVHCs from being used and to enable customers to safely handle these substances. There are SVHCs known to Daimler AG, according to supplier information and internal product information, found in individual components of this vehicle in quantities of over 0.1 percent by weight.

Further information can be obtained at the following addresses:

- https://reach.daimler.com/de/home/
- https://reach.daimler.com/en/home/

Implied warranty

! **NOTE** Damage to the vehicle arising from violation of these operating instructions.

Damage to the vehicle can arise from violation of these operating instructions.

This damage is not covered either by the Mercedes-Benz implied warranty or by the New- or Used-Vehicle Warranty.

▶ Follow the instructions in these operating instructions on proper operation of your vehicle as well as on possible vehicle damage.

QR code for rescue card

The QR code is secured in the fuel filler flap and on the opposite side on the B-pillar. In the event of an accident, rescue services can use the QR code to quickly find the appropriate rescue card for your vehicle. The current rescue card contains the most important information about your vehicle in a compact form, e.g. the routing of the electric lines.

Further information can be obtained at https://www.mercedes-benz.de/qr-code.

Data storage

Electronic control units

Electronic control units are fitted in your vehicle. Some of these are necessary for the safe operation of your vehicle, while some assist you when driving (driver assistance systems). In addition, your vehicle provides comfort and entertainment functions, which are also made possible by electronic control units.

Electronic control units contain data memories which can temporarily or permanently store technical information about the vehicle's operating state, component loads, maintenance requirements and technical events or faults.

In general, this information documents the state of a component part, a module, a system or the surroundings such as:

- operating status of system components (e.g. fill levels, battery status, tyre pressure)
- status messages concerning the vehicle or its individual components (e.g. number of wheel revolutions/speed, longitudinal acceleration, lateral acceleration, display of fastened seat belts)
- malfunctions or faults in important system components (e.g. lights, brakes)
- information on events leading to vehicle damage
- system reactions in special driving situations (e.g. airbag deployment, intervention of stability control systems)
- ambient conditions (e.g. temperature, rain sensor)

In addition to providing the actual control unit function, this data assists the manufacturer in detecting and rectifying faults and optimising vehicle functions. The majority of this data is temporary and is only processed in the vehicle itself. Only a small portion of the data is stored in the event or fault memory.

When your vehicle is serviced, technical data from the vehicle can be read out by service network employees (e.g. workshops, manufacturers) or third parties (e.g. breakdown services). Services include repair services, maintenance processes, warranty claims and quality assurance measures, for example. The read out is performed via the legally prescribed port for the diagnostics connection in the vehicle. The respective service network locations or third parties collect, process and use the data. They document technical statuses of the vehicle, assist in finding faults and improving quality and are transmitted to the manufacturer, if necessary. Furthermore, the manufacturer is subject to product liability. For this, the manufacturer requires technical data from vehicles.

Fault memories in the vehicle can be reset by a service outlet as part of repair or maintenance work.

Depending on the selected equipment, you can import data into vehicle convenience and infotainment functions yourself.

This includes, for example:

- multimedia data such as music, films or photos for playback in an integrated multimedia system
- address book data for use in connection with an integrated hands-free system or an integrated navigation system
- entered navigation destinations
- data about the use of internet services

This data can be saved locally in the vehicle or it is located on a device which you have connected to the vehicle (e.g. a smartphone, USB flash drive or MP3 player). If this data is stored in the vehicle, you can delete it at any time. This data is sent to third parties only at your request, particularly when you use online services in accordance with the settings that you have selected.

You can store or change convenience settings/individualisations in the vehicle at any time.

Depending on the equipment, this includes, for example:

- settings for the seat and steering wheel positions
- suspension and climate control settings
- customisations such as interior lighting

If your vehicle is accordingly equipped, you can connect your smartphone or another mobile end device to the vehicle. You can control this by means of the control elements integrated in the vehicle. Images and audio from the smartphone can be output via the multimedia system. Certain information is simultaneously transferred to your smartphone.

Depending on the type of integration, this can include:

- general vehicle data
- position data

This allows you to use selected apps on your smartphone, such as navigation or music playback. There is no further interaction between the smartphone and the vehicle; in particular, vehicle data is not directly accessible. Which type of further data processing occurs is determined by the provider of the specific app used. Which settings you can make, if any, depends on the specific app and the operating system of your smartphone.

Online services

Wireless network connection

If your vehicle has a wireless network connection, it enables data to be exchanged between your vehicle and additional systems. The wireless network connection is enabled via the vehicle's transmission and reception unit or via connected mobile end devices (e.g. smartphones). Online functions can be used via the wireless network connection. This includes online services and applications/apps provided by the manufacturer or other providers.

Manufacturer's services

Regarding online services of the manufacturer, the individual functions are described by the manufacturer in a suitable place (e.g. Owner's Manual, website of the manufacturer) along with the relevant data protection information. Personal data may be used for the provision of online services. Data is exchanged via a secure connection, e.g. the manufacturer's designated IT systems. Personal data is collected, processed and used via the provision of services exclusively on the basis of legal permissions or with prior consent.

The services and functions (sometimes subject to a fee) can usually be activated or deactivated. In some cases, this also applies to the entire vehicle's data connection. This excludes, in particular, legally prescribed functions and services.

Third party services

If it is possible to use online services from other providers, these services are the responsibility of the provider in question and subject to that provider's data protection conditions and terms of use. The manufacturer has no influence on the content exchanged.

For this reason, please ask the service provider for information about the type, extent and purpose of the collection and use of personal data when services are provided by third parties.

Copyright

Information on licences for free and open-source software used in your vehicle can be found on the data carrier in your vehicle document wallet and with updates on the following website:

https://www.mercedes-benz.com/opensource

Restraint system

Protection provided by the restraint system

The restraint system includes the following components:

- Seat belt system
- Airbags
- Child restraint system
- Child seat securing systems

The restraint system can help prevent the vehicle occupants from coming into contact with parts of the vehicle interior in the event of an accident. In the event of an accident, the restraint system can also reduce the forces to which the vehicle occupants are subjected.

A seat belt can only provide the best level of protection if it is worn correctly. Depending on the detected accident situation, seat belt tensioners and/or airbags supplement the protection offered by a correctly worn seat belt. Seat belt tensioners and/or airbags are not deployed in every accident.

In order for the restraint system to provide the intended level of protection, each vehicle occupant must observe the following information:

- Fasten seat belts correctly.
- Sit in an almost upright seat position with their back against the seat backrest.
- Sit with their feet resting on the floor, if possible.
- Always secure persons under 1.50 m tall in an additional restraint system suitable for Mercedes-Benz vehicles.

However, no system available today can completely eliminate injuries and fatalities in every accident situation. In particular, the seat belt and airbag generally do not protect against objects penetrating the vehicle from the outside. It is also not possible to completely rule out the risk of injury caused by the airbag deploying.

Reduced restraint system protection

WARNING Risk of injury or death from modifications to the restraint system

The restraint system can no longer function correctly after alterations have been made.

The restraint system may then not protect the vehicle occupants as intended by failing in an accident or triggering unexpectedly, for example

- Never alter the parts of the restraint system.
- Never tamper with the wiring or any electronic component parts or their software.

If it is necessary to modify the vehicle to accommodate a person with disabilities, contact a qualified specialist workshop.

Mercedes-Benz recommends that you use driving aids which have been approved for your vehicle by Mercedes-Benz.

Restraint system functionality

When the ignition is switched on, a self-test is performed, during which the restraint system warning lamp lights up. It goes out no later than a few seconds after the vehicle is started. The components of the restraint system are then functional.

Malfunctioning restraint system

A malfunction has occurred in the restraint system if:

- the restraint system warning lamp does not light up when the ignition is switched on
- the restraint system warning lamp lights up continuously or repeatedly during a journey

WARNING Risk of injury due to malfunctions in the restraint system

If the restraint system is malfunctioning, restraint system components may be triggered unintentionally or may not deploy as intended during an accident. This may affect the seat belt tensioner or airbag, for example.

▶ Have the restraint system checked and repaired immediately at a qualified specialist workshop.

Function of the restraint system in an accident

How the restraint system works is determined by the severity of the impact detected and the type of accident anticipated:

- Frontal impact
- Rear impact
- Side impact
- Only for certain countries: rollover

The activation thresholds for the components of the restraint system are determined based on the evaluation of the sensor values measured at various points in the vehicle. This process is preemptive in nature. The triggering/deployment of the components of the restraint system must take place in good time at the start of the collision.

Factors which can only be seen and measured after a collision has occurred do not play a decisive role in the deployment of an airbag. Nor do they provide an indication of airbag deployment.

The vehicle may be deformed significantly without an airbag being deployed. This is the case if only parts which are relatively easily deformed are affected and the rate of vehicle deceleration is not high. Conversely, an airbag may be deployed even though the vehicle suffers only minor deformation. If very rigid vehicle parts such as longitudinal members are hit, for example, this may result in sufficiently high levels of vehicle deceleration.

The components of the restraint system can be activated or deployed independently of each other:

Component	Detected deployment situation
Seat belt tensioners	Frontal impact, rear impact, side impact, rollover[1)]
Driver's airbag, front passenger airbag	Frontal impact
Knee airbag	Frontal impact
Side airbag	Side impact
Window airbag	Side impact, rollover[1)], frontal impact

[1)] Only for certain countries.

The front passenger airbag can only be deployed in an accident if the PASSENGER AIR BAG OFF indicator lamp is off. If the front passenger seat is occupied, make sure, both before and during the journey, that the status of the front passenger airbag is correct (→ page 48).

⚠ WARNING Rick of burns from hot airbag components

The airbag parts are hot after an airbag has been deployed.

- ▶ Do not touch the airbag parts.
- ▶ Have a deployed airbag replaced at a qualified specialist workshop as soon as possible.

Mercedes-Benz recommends that you have the vehicle towed to a qualified specialist workshop after an accident. Take this into account, particularly if a seat belt tensioner is triggered or an airbag deployed.

If the seat belt tensioners are triggered or an airbag is deployed, you will hear a bang, and a small amount of powder may also be released:

- The bang will not generally affect your hearing.
- In general, the powder released is not hazardous to health but may cause short-term breathing difficulties to persons suffering from asthma or other pulmonary conditions.

  Provided it is safe to do so, leave the vehicle immediately or open the window in order to prevent breathing difficulties.

Seat belts

Protection provided by the seat belt

Always fasten your seat belt correctly before starting a journey. A seat belt can only provide the best level of protection if it is worn correctly.

⚠ WARNING Risk of injury or death due to incorrectly fastened seat belt

If the seat belt is not worn correctly, it cannot perform its intended protective function.

In addition, an incorrectly fastened seat belt can also cause injuries, for example, in the event of an accident or when braking or changing direction suddenly.

▶ Always ensure that all vehicle occupants have their seat belts fastened correctly and are sitting properly.

Always observe the instructions about the correct driver's seat position and adjusting the seat (→ page 102).

In order for the correctly worn seat belt to provide the intended level of protection, each vehicle occupant must observe the following information:

- The seat belt must not be twisted and must fit tightly and snugly across the body.
- The seat belt must be routed across the centre of the shoulder and as low down across the hips as possible.
- The shoulder section of the seat belt should not touch your neck nor be routed under your arm or behind your back.
- Avoid wearing bulky clothing, e.g. a winter coat.
- Push the lap belt down as far as possible across your hips and pull tight with the shoulder section of the belt. Never route the lap belt across your abdomen.

  Pregnant women must also take particular care with this.
- Never route the seat belt across sharp, pointed, abrasive or fragile objects.
- Only one person should use each seat belt at any one time. Never allow babies and children to travel sitting on the lap of another vehicle occupant.
- Never secure objects with a seat belt if the seat belt is also being used by one of the vehicle's occupants. Always observe the instructions for loading the vehicle when securing objects, luggage or loads (→ page 112).

  Also ensure that no objects, e.g. a cushion, are ever placed between a person and the seat.

If children are travelling in the vehicle, be sure to observe the instructions and safety notes on "Children in the vehicle" (→ page 53).

Limitations of the protection provided by the seat belt

⚠ **WARNING** Risk of injury or death due to incorrect seat position

The seat belt does not offer the intended level of protection if you have not moved the seat backrest to an almost vertical position.

When braking or in the event of an accident, you could slide underneath the seat belt and sustain abdominal or neck injuries, for example.

▶ Adjust the seat properly before beginning your journey.

▶ Always ensure that the seat backrest is in an almost vertical position and that the shoulder section of your seat belt is routed across the centre of your shoulder.

⚠ WARNING Risk of injury or death when additional restraint systems are not used for persons with a smaller build

Persons under 1.50 m tall cannot wear the seat belt correctly without a suitable additional restraint system.

If the seat belt is not worn correctly, it cannot perform its intended protective function. In addition, an incorrectly fastened seat belt can also cause injuries, for example, in the event of an accident or when braking or changing direction suddenly.

- ▶ Always secure persons under 1.50 m tall in a suitable restraint system.

⚠ WARNING Risk of injury or death due to damaged or modified seat belts

Seat belts cannot provide protection in the following situations:

- the seat belt is damaged, has been modified, is extremely dirty, bleached or dyed
- the seat belt buckle is damaged or extremely dirty
- modifications have been made to the seat belt tensioner, seat belt anchorage or seat belt retractor

Seat belts may sustain non-visible damage in an accident, e.g. due to glass splinters.

Modified or damaged seat belts could tear or fail in the event of an accident, for example.

Modified belt tensioners may be deployed unintentionally or not function as intended.

- ▶ Never modify the seat belts, seat belt tensioners, seat belt anchorages or seat belt retractors.
- ▶ Make sure that the seat belts are not damaged, are not worn and are clean.
- ▶ Always have the seat belts checked immediately after an accident at a qualified specialist workshop.

Mercedes-Benz recommends that you only use seat belts that are approved specifically for your vehicle by Mercedes-Benz.

The sports seat is designed for the standard three-point seat belt. If you fit another multipoint seat belt, e.g. sport or racing seat belts, the restraint system cannot provide the best level of protection as intended.

Depending on the seat model, there may be an opening in the seat backrest. These openings have no function.

⚠ WARNING Risk of injury or fatal injury due to modified seat belt systems

If you feed seat belts through the opening in the seat backrest, the seat backrest may be damaged or may even break in the event of an accident.

- ▶ Only use the standard three-point seat belt.
- ▶ Never modify the seat belt system.

WARNING Risk of injury or death from deployed pyrotechnic seat belt tensioners

Pyrotechnic seat belt tensioners that have been deployed are no longer operational and are unable to perform their intended protective function.

- Therefore, have deployed pyrotechnic seat belt tensioners immediately replaced at a qualified specialist workshop.

Mercedes-Benz recommends that you have the vehicle towed to a qualified specialist workshop after an accident.

NOTE Damage caused by trapping the seat belt

If an unused seat belt is not fully retracted, it may become trapped in the door or in the seat mechanism.

- Always ensure that an unused seat belt is fully retracted.

Fastening seat belts

If the seat belt is pulled quickly or sharply, the seat belt retractor locks. The seat belt strap cannot be pulled out any further.

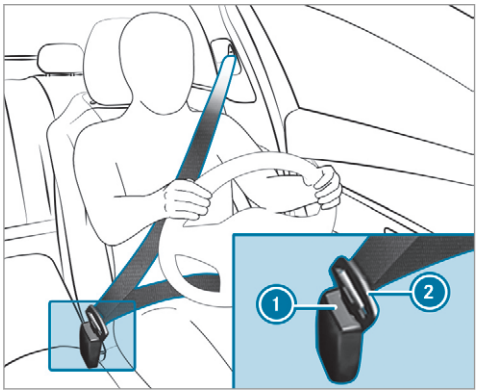

- Always engage seat belt tongue (2) of the seat belt into seat belt buckle (1) of the corresponding seat.

Vehicles with automatic front passenger airbag shutoff:

NOTE Deployment of the seat belt tensioner and side impact airbag when the front passenger seat is unoccupied

If the seat belt tongue is engaged in the seat belt buckle of the unoccupied front passenger seat, the seat belt tensioner and the side impact airbag may also deploy in the event of an accident along with other systems.

- Only one person should use each seat belt at any one time.

Vehicles without automatic front passenger airbag shutoff:

NOTE Deployment of the seat belt tensioner when the front passenger seat is unoccupied

If the seat belt tongue is engaged in the seat belt buckle of the unoccupied front passenger seat, the seat belt tensioner may

also deploy in the event of an accident along with other systems.

- Only one person should use each seat belt at any one time.

Seat belt adjustment function

Vehicles with PRE-SAFE®: if the front seat belt is not pulled tightly across your body, the seat belt adjustment may automatically apply a certain tightening force. Do not hold the seat belt tightly while it is adjusting.

You can activate and deactivate the seat belt adjustment function using the multimedia system (→ page 42).

Releasing a seat belt

- Press the release button in the seat belt buckle and guide the seat belt back with the seat belt tongue.

Activating/deactivating seat belt adjustment via the multimedia system

Multimedia system:

↳ ⌂ ▸▸ Settings ▸▸ Vehicle

- Activate or deactivate Belt adjustment.

Seat belt warning function for the driver and front passenger

The seat belt warning lamp in the instrument display is a reminder that all vehicle occupants must wear their seat belts correctly.

In addition, a warning tone may sound.

As soon as the driver and front passenger fasten their seat belts, the seat belt warning goes out.

Function of the rear seat belt status display

The rear seat belt status display is only available for certain countries.



When the ignition is switched on, the rear seat belt status display informs you for a certain amount of time which rear seat belt is not fastened.

You can immediately dismiss the rear seat belt status display using the back button on the left-hand side of the steering wheel (→ page 269).

If a vehicle occupant unfastens a seat belt in the rear while the vehicle is motion, the rear seat belt status display appears again.

In addition, a warning tone may sound. In this case, the rear seat belt status display cannot be hidden using the back button on the left-hand side of the steering wheel.

Airbags

Overview of airbags

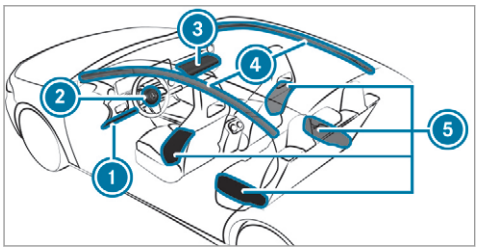

1. Knee airbag
2. Driver's airbag
3. Front passenger airbag
4. Window airbag
5. Side airbag

The installation location of an airbag is identified by the AIRBAG symbol.

When enabled, an airbag can provide additional protection for the respective vehicle occupant.

Potential protection from each airbag:

AIRBAG	Potential protection for:
Knee airbag	Thigh, knee and lower leg
Driver's airbag, front passenger airbag	Head and ribcage
Window airbag	Head
Side airbag	Ribcage and pelvis

Mercedes-AMG vehicles: observe the notes in the Supplement. Otherwise, you may fail to recognise dangers.

⚠ **WARNING** Risk of injury or fatal injuries if the front passenger airbag is enabled

If the front passenger front airbag is enabled, a child on the front passenger seat may be struck by the front passenger airbag during an accident.

NEVER use a rearward-facing child restraint system on a seat with an ENABLED FRONT AIRBAG, DEATH or SERIOUS INJURY to the CHILD can occur.

When fitting a child restraint system to the front passenger seat, observe the vehicle-specific information (→ page 73). Also, always observe the notes on rearward-facing or forward-facing child restraint systems on the front passenger seat.

Vehicles with automatic front passenger airbag shutoff:

The front passenger airbag can only be deployed in an accident if the PASSENGER AIR BAG OFF indicator lamp is off. If the front passenger seat is occupied, make sure, both before and during the journey, that the status of the front passenger airbag is correct (→ page 48).

NOTE Important points to remember if the front passenger seat is unoccupied

In an accident, the components of the restraint system may deploy unnecessarily on the front passenger side if:

- There are heavy objects on the front passenger seat.
- The seat belt tongue is engaged in the seat belt buckle of the front passenger seat and the front passenger seat is unoccupied.

▶ Stow objects in a suitable place.

▶ Only one person should use each seat belt at any one time.

Depending on the detected accident situation, the window airbag on the front passenger side may deploy. The airbag is deployed regardless of whether the front passenger seat is occupied.

Protection by the airbags

Depending on the accident situation, an airbag may supplement the protection offered by a correctly fastened seat belt.

WARNING Risk of injury or death due to incorrect seat position

If you deviate from the correct seat position, the airbag cannot perform its intended protective function and deployment may even cause further injuries.

In order to avoid risks, each vehicle occupant must always make sure of the following:

- Fasten seat belts correctly. Pregnant women must take particular care to ensure that the lap belt never lies across the abdomen.
- Adopt the correct seat position and keep as far away as possible from the airbags.
- Observe the following information.

▶ Always make sure that there are no objects between the airbag and vehicle occupant.

To avoid the risks resulting from the deployment of an airbag, each vehicle occupant must observe the following information in particular:

- Before starting your journey, adjust your seat correctly; the driver's seat and front passenger seat should be moved as far back as possible.

  When doing so, always observe the information on the correct driver's seat position (→ page 102).
- Only hold the steering wheel by the steering wheel rim. This allows the airbag to be fully deployed.
- Always lean against the seat backrest when the vehicle is in motion. Do not lean forwards or against the door or side window. You may otherwise be in the deployment area of the airbags.
- Always keep your feet on the floor. Do not put your feet on the cockpit, for example.

Your feet may otherwise be in the deployment area of the airbag.

- If children are travelling in the vehicle, observe the additional notes (→ page 53).
- Always stow and secure objects correctly.

Objects in the vehicle interior may prevent an airbag from functioning correctly. Each vehicle occupant must always make sure of the following in particular:

- There are no people, animals or objects between the vehicle occupants and an airbag.
- There are no objects between the seat, door and door pillar (B-pillar).
- There are no hard objects, e.g. coat hangers, hanging on the grab handles or coat hooks.
- There are no accessory parts, such as mobile navigation devices, mobile phones or cup holders, attached to the vehicle within the deployment area of an airbag, e.g. on the cockpit, on the door, on the side window or on the side wall trim.

In addition, no connecting cables, tensioning straps or retaining straps must be routed or attached to the vehicle within the deployment area of an airbag. Always comply with the accessory manufacturer's installation instructions and, in particular, the notes on suitable places for installation.

- There are no heavy, sharp-edged or fragile objects in the pockets of your clothing. Store such objects in a suitable place.

Limited protection provided by airbags

⚠ WARNING Risk of injury due to modifications to the airbag cover

If you modify the cover of an airbag or affix objects such as stickers to it, the airbag may no longer function correctly.

▶ Never modify the cover of an airbag and do not affix objects to it.

The installation location of an airbag is identified by the AIRBAG symbol (→ page 43).

⚠ WARNING Risk of injury or death due to the use of unsuitable seat covers

Unsuitable seat covers can obstruct or prevent the deployment of the airbags integrated into the seats.

Consequently, the airbags cannot protect vehicle occupants as they are designed to do. In addition, the operation of the automatic front passenger airbag shutoff could be restricted.

▶ You should only use seat covers that have been approved for the corresponding seats by Mercedes-Benz.

⚠ WARNING Risk of injury due to malfunctions of the sensors in the door panelling

Sensors to control the airbags are located in the doors. Modifications or work not performed correctly to the doors or door panelling, as well as damaged doors, can lead to the function of the sensors being impaired. The airbags might therefore not function properly any more.

Consequently, the airbags cannot protect vehicle occupants as they are designed to do.

- ▶ Never modify the doors or parts of the doors.
- ▶ Always have work on the doors or door panelling carried out at a qualified specialist workshop.

⚠ WARNING Risk of injury due to deployed airbag

A deployed airbag no longer offers any protection and cannot provide the intended protective function in the event of an accident.

- ▶ Have the vehicle towed to a qualified specialist workshop in order to have the deployed airbag replaced.

Have deployed airbags replaced immediately.

Status of the front passenger front airbag

Function of the automatic front passenger airbag shutoff

The automatic front passenger airbag shutoff is able to detect whether the front passenger seat is occupied by a person or a child restraint system. The front passenger airbag is enabled or disabled accordingly.

When fitting a child restraint system to the front passenger seat, always make sure of the following:

- Ensure that the child restraint system is positioned correctly (→ page 58).
- Always observe the child restraint system manufacturer's installation instructions.
- Never place objects, e.g. cushions, under or behind the child restraint system.
- Fully retract the seat cushion length adjustment.
- The entire base of the child restraint system must always rest on the sitting surface of the front passenger seat.
- The backrest of the forward-facing child restraint system must, as far as possible, be resting on the seat backrest of the front passenger seat.
- The child restraint system must not touch the roof or be put under strain by the head restraints. Adjust the seat backrest inclination and the head restraint setting accordingly.

⚠ WARNING Risk of injury or death due to objects between the seat surface and the child restraint system

Objects between the seat surface and the child restraint system could affect the function of the automatic front passenger front airbag shutoff.

This could result in the front passenger front airbag not functioning as intended during an accident.

- ▶ Do not place any objects between the sitting surface and the child restraint system.

- ▶ The entire base of the child restraint system must always rest on the sitting surface of the front passenger seat.
- ▶ The backrest of the forward-facing child restraint system must, as far as possible, be resting on the seat backrest of the front passenger seat.
- ▶ Always comply with the child restraint system manufacturer's installation instructions.

A person on the front passenger seat must observe the following information:

- Fasten seat belts correctly (→ page 38).
- Sit in an almost upright seat position with their back against the seat backrest.
- Sit with their feet resting on the floor, if possible.

The front passenger airbag may otherwise be disabled by mistake, for example in the following situations:

- The front passenger transfers their weight by supporting themselves on a vehicle armrest.
- The front passenger sits in such a way that their weight is raised from the sitting surface.

⚠ **WARNING** Risk of injury or death due to deactivated front passenger airbag

If the PASSENGER AIRBAG OFF indicator lamp is lit, the front passenger airbag is disabled. It will not be deployed in the event of an accident and cannot perform its intended protective function.

A person in the front passenger seat could then, for example, come into contact with the vehicle interior, especially if the person is sitting too close to the cockpit.

If the front passenger seat is occupied, always ensure that:

- The classification of the person in the front passenger seat is correct and the front passenger airbag is enabled or disabled in accordance with the person in the front passenger seat.
- The front passenger seat has been moved as far back as possible.
- The person is seated correctly.

▶ Ensure, both before and during the journey, that the status of the front passenger airbag is correct.

If the front passenger seat is occupied, the classification of the person or child restraint system on the front passenger seat takes place after the front passenger airbag shutoff self-test. The PASSENGER AIR BAG indicator lamps display the status of the front passenger airbag.

Always observe the notes on the function of the PASSENGER AIR BAG indicator lamps (→ page 48).

Function of the PASSENGER AIR BAG indicator lamps



Vehicles without automatic front passenger airbag shutoff have a special sticker affixed to the side of the cockpit on the front passenger side (→ page 72).

Self-test of automatic front passenger airbag shutoff

When the ignition is switched on, a self-test is performed during which the two PASSENGER AIR BAG ON and OFF indicator lamps light up simultaneously.

The status of the front passenger airbag is displayed after the self-test:

- PASSENGER AIR BAG ON lights up for 60 seconds, subsequently both indicator lamps are off (PASSENGER AIR BAG ON and OFF): the front passenger airbag is able to deploy in the event of an accident.
- PASSENGER AIR BAG OFF lights up continuously: the front passenger airbag is disabled. It will then not be deployed in the event of an accident.

If the PASSENGER AIR BAG ON indicator lamp is off, only the PASSENGER AIR BAG OFF indicator lamp shows the status of the front passenger airbag. The PASSENGER AIR BAG OFF indicator lamp may be lit continuously or be off.

If the PASSENGER AIR BAG OFF indicator lamp and the restraint system warning lamp light up simultaneously, the front passenger seat may not be used. Also in this case, do not fit a child restraint system to the front passenger seat. Have automatic front passenger airbag shutoff checked and repaired immediately at a qualified specialist workshop.

Status display

If the front passenger seat is occupied, ensure, both before and during the journey, that the status of the front passenger airbag is correct for the current situation.

After fitting a rearward-facing child restraint system to the front passenger seat:

PASSENGER AIR BAG OFF must be lit continuously.

⚠ **WARNING** Risk of injury or death from using a rearward-facing child restraint system when the front passenger front airbag is enabled

If you secure a child in a rearward-facing child restraint system on the front passenger seat and the PASSENGER AIR BAG OFF indi-

cator lamp is off, the front passenger airbag can deploy in the event of an accident.

The child could be struck by the airbag.

Always ensure that the front passenger airbag is disabled. The PASSENGER AIR BAG OFF indicator lamp must be lit.

NEVER use a rearward-facing child restraint system on a seat protected by an ENABLED FRONT AIRBAG in front of it, DEATH or SERIOUS INJURY to the CHILD can occur.

When fitting a child restraint system to the front passenger seat, observe the vehicle-specific information (→ page 73).

Depending on the child restraint system and the stature of the child, the PASSENGER AIR BAG OFF indicator lamp may be off. In this case, do not fit the rearward-facing child restraint system to the front passenger seat.

Instead, fit the rearward-facing child restraint system to a suitable rear seat.

After fitting a forward-facing child restraint system to the front passenger seat: depending on the child restraint system and the stature of the child, PASSENGER AIR BAG OFF may be lit continuously or be off. Always observe the following information.

⚠ **WARNING** Risk of injury or death due to incorrect positioning of the forward-facing child restraint system

If you secure a child in a forward-facing child restraint system on the front passenger seat and you position the front passenger seat too close to the dashboard, in the event of an accident, the child could:

- come into contact with parts of the vehicle's interior if the PASSENGER AIR BAG OFF indicator lamp is lit, for example
- be struck by the airbag if the PASSENGER AIR BAG OFF indicator lamp is off

▶ Always move the front passenger seat as far back as possible and fully retract the seat cushion length adjustment. Always make sure that the shoulder belt strap is correctly routed from the seat belt outlet on the vehicle to the shoulder belt guide on the child restraint system. The shoulder belt strap must be routed forwards and downwards from the seat belt outlet. If necessary, adjust the front passenger seat accordingly.

▶ Always observe the child restraint system manufacturer's installation instructions.

When fitting a child restraint system to the front passenger seat, observe the vehicle-specific information (→ page 73).

If a person is sitting on the front passenger seat: PASSENGER AIR BAG OFF may be lit continuously or be off, depending on the person's stature.

A person on the front passenger seat must always observe the following information:

- If the front passenger seat is occupied by an adult or a person with a stature corresponding to that of an adult, the PASSENGER AIR BAG OFF indicator lamp must be off. This indicates that the front passenger airbag is enabled.

If the PASSENGER AIR BAG OFF indicator lamp is lit continuously, an adult or person with a build corresponding to that of an adult should not use the front passenger seat.

Instead, they should use a rear seat.

- If the front passenger seat is occupied by a person of smaller stature (e.g. a teenager or small adult), the PASSENGER AIR BAG OFF indicator lamp either lights up continuously or remains off, depending on the result of the classification.
  - If the PASSENGER AIR BAG OFF indicator lamp is off: move the front passenger seat as far back as possible, or the person of smaller stature should use a rear seat.
  - If the PASSENGER AIR BAG OFF indicator lamp is lit continuously: the person of smaller stature should not use the front passenger seat.

⚠ WARNING Risk of injury or death when the PASSENGER AIR BAG OFF indicator lamp is lit

If the PASSENGER AIR BAG OFF indicator lamp remains lit after the system self-test, the front passenger airbag is disabled. It will not be deployed in the event of an accident. In this case, the front passenger airbag cannot perform its intended protective function, e.g. when a person is seated in the front passenger seat.

That person could, for example, come into contact with the vehicle interior, especially if the person is sitting too close to the cockpit.

If the front passenger seat is occupied, always ensure that:

- The classification of the person in the front passenger seat is correct and the front passenger airbag is enabled or disabled in accordance with the person in the front passenger seat.
- The person is seated properly with a correctly fastened seat belt.
- The front passenger seat has been moved as far back as possible.

Be sure to also observe the following further related subjects:

- Child restraint system on the front passenger seat (→ page 73).
- Suitable positioning of the child restraint system (→ page 58).

PRE-SAFE® system

PRE-SAFE® (anticipatory occupant protection)

PRE-SAFE® is able to detect certain critical driving situations and implement pre-emptive measures to protect the vehicle occupants.

PRE-SAFE® can implement the following measures independently of each other:

- Tightening the seat belts on the driver's seat and front passenger seat.

- Closing the side windows.
- **Vehicles with sliding sunroof:** close the sliding sunroof.
- **Vehicles with memory function:** move the front passenger seat to a more favourable seat position.
- PRE-SAFE® Sound: provided that the multimedia system is switched on, generates a brief noise signal to stimulate the innate protective mechanism of a person's hearing.

! **NOTE** Damage caused by objects in the footwell or behind the seat

The automatic adjustment of the seat position may result in damage to the seat and/or the object.

▶ Stow objects in a suitable place.

Reversing the PRE-SAFE® system measures

If an accident did not occur, the pre-emptive measures that were taken are reversed.

You will need to perform certain settings yourself.

▶ If the seat belt pre-tensioning is not reduced, move the seat backrest back slightly. The locking mechanism releases.

Function of PRE-SAFE® PLUS (anticipatory occupant protection plus)

PRE-SAFE® PLUS can detect certain impacts, particularly an imminent rear impact, and take pre-emptive measures to protect the vehicle occupants. These measures cannot necessarily prevent an imminent impact.

PRE-SAFE® PLUS can implement the following measures independently of each other:

- Tightening the seat belts on the driver's seat and front passenger seat.
- Activating the rear hazard warning lights at a higher flashing frequency.
- Increasing brake pressure when the vehicle is stationary. This brake application is cancelled automatically when the vehicle pulls away.

If an accident did not occur, the pre-emptive measures that were taken are reversed.

System limits

The system will not initiate any action in the following situations:

- when reversing

  or

- when the vehicle is towing a trailer and there is a risk of a rear impact

The system will not initiate any braking application in the following situations:

- whilst driving

  or

- when entering or exiting a parking space while using Active Parking Assist

Safely transporting children in the vehicle

Always observe when children are travelling in the vehicle

ⓘ Also strictly observe the safety notes for the specific situation. In this way you can recognise potential risks and avoid dangers if children are travelling in the vehicle (→ page 53).

Be diligent

Bear in mind that neglecting to secure a child in the child restraint system may have serious consequences. Always be diligent in securing a child carefully before every journey.

To improve protection for children younger than 12 years old or under 1.50 m in height, Mercedes-Benz recommends you observe the following information:

- Always secure the child in a child restraint system suitable for this Mercedes-Benz vehicle.
- The child restraint system must be appropriate to the age, weight and size of the child.
- The vehicle seat must be suitable for fitting a child restraint system (→ page 58).

Accident statistics show that children secured on the rear seats are generally safer than children secured on the front seats. For this reason, Mercedes-Benz strongly advises that you fit a child restraint system to a rear seat.

Generic term "child restraint system"

The generic term child restraint system is used in this Owner's Manual. A child restraint system is, for example:

- a baby car seat
- a rearward-facing child seat
- a forward-facing child seat
- a child booster seat with a backrest and seat belt guide

  Mercedes-Benz recommends using a child booster seat with a backrest.

The child restraint system must be appropriate to the age, weight and size of the child.

Observing laws and legal requirements

Always observe the legal requirements when using a child restraint system in the vehicle.

Make sure that the child restraint system is approved in accordance with the valid test specifications and guidelines. Further information can be obtained at a qualified specialist workshop. Mercedes-Benz recommends that you use a Mercedes-Benz Service Centre for this purpose.

Only use approved child restraint systems

Only child restraint systems that meet the following UNECE standards are permitted for use in the vehicle:

- UN-R44
- UN-R129 (i-Size child restraint systems)

Information on child restraint system approval categories and details on the approval label on the child restraint system (→ page 59).

Detecting risks, avoiding danger

Securing systems for child restraint systems in the vehicle

Only use the following securing systems for child restraint systems:

- the ISOFIX or i-Size mounting brackets
- the vehicle's seat belt system
- the Top Tether anchorages

Fitting an ISOFIX or an i-Size child restraint system is preferred.

Simply attaching to the securing rings on the vehicle can reduce the risk of fitting the child restraint system incorrectly.

When securing a child with the integrated seat belt of the ISOFIX or i-Size child restraint system, always comply with the permissible gross weight for the child and child restraint system (→ page 65).

Advantage of a rearward-facing child restraint system

It is preferable to transport a baby or a small child in a suitable rearward-facing child restraint system. In this case, the child sits in the opposite direction to the direction of travel and faces backwards.

Babies and small children have comparatively weak neck muscles in relation to the size and weight of their head. The risk of injury to the cervical spine during an accident can be reduced in a rearward-facing child restraint system.

Always secure a child restraint system correctly

⚠ **WARNING** Risk of injury or death caused by incorrect installation of the child restraint system

If the child restraint system is incorrectly installed on a suitable seating position, it cannot perform its intended protective function.

The child cannot be restrained in the event of an accident, heavy braking or a sudden change of direction.

- ▶ Always comply with the manufacturer's installation instructions for the child restraint system and its correct use.
- ▶ Make sure that the entire base of the child restraint system always rests on the sitting surface of the seat.
- ▶ Never place objects under or behind the child restraint system, e.g. cushions.
- ▶ Always use child restraint systems with the original cover designed for them.
- ▶ Always replace damaged covers with genuine covers.

⚠ **WARNING** Risk of injury or death from unsecured child restraint systems in the vehicle

If the child restraint system is not correctly installed or secured, it could release in the event of an accident, sudden braking or a sudden change in direction.

The child restraint system could be flung around and hit vehicle occupants.

- ▶ Always fit child restraint systems correctly, even when not in use.
- ▶ Always comply with the child restraint system manufacturer's installation instructions.

- Always observe the child restraint system manufacturer's installation and operating instructions as well as the vehicle-specific information:
  - Fit the ISOFIX or i-Size child restraint system to the rear seat (→ page 65).
  - Secure the child restraint system with the seat belt on the rear seat (→ page 71).
  - Secure the child restraint system with the seat belt on the front passenger seat (→ page 74). Observe the specific instructions for the rearward-facing and forward-facing child restraint systems (→ page 73).

    If the front passenger seat is occupied, ensure, both before and during the journey, that the status of the front passenger airbag is correct for the current situation (→ page 48).
- Observe the warning labels in the vehicle interior and on the child restraint system.
- Also secure Top Tether if present.

Do not alter the child restraint system

⚠ **WARNING** Risk of injury due to alterations to the child restraint system

The child restraint system may no longer function as it is supposed to if you make alterations or attach objects to it, e.g. toys or unsuitable accessories. This poses an increased risk of injury!

Never alter the child restraint system. Only attach accessories which the manufacturer of the child restraint system has authorised especially for this child restraint system.

Mercedes-Benz recommends Mercedes-Benz care products for cleaning child restraint systems recommended by Mercedes-Benz.

Only use child restraint systems which are in proper working condition

⚠ **WARNING** Risk of injury or death caused by the use of damaged child restraint systems

Child restraint systems or their retaining systems that have been subjected to a load in an accident may then not be able to perform their intended protective function.

The child cannot be restrained in the event of an accident, heavy braking or a sudden change of direction.

- ▶ Always replace child restraint systems immediately that have been damaged or involved in an accident.
- ▶ Have the securing systems for the child restraint systems checked at a qualified specialist workshop before installing a child restraint system again.

Avoid direct sunlight

WARNING Risk of burns when the child seat is exposed to direct sunlight

If the child restraint system is exposed to direct sunlight or heat, parts could heat up.

Children could suffer burns on these parts, particularly on metallic parts of the child restraint system.

- Always make sure that the child restraint system is not exposed to direct sunlight.
- Protect it with a blanket, for example.
- If the child restraint system has been exposed to direct sunlight, allow it to cool before securing a child into it.
- Never leave children unattended in the vehicle.

Observe when stopping or parking

WARNING Risk of accident and injury due to children left unattended in the vehicle

If children are left unattended in the vehicle, they could:

- Open doors, thereby endangering other persons or road users.
- Get out and be struck by oncoming traffic.
- Operate vehicle equipment and become trapped, for example.

In addition, the children could also set the vehicle in motion, for example by:

- Releasing the parking brake.
- Changing the transmission position.
- Starting the vehicle.

- Never leave children unattended in the vehicle.
- When leaving the vehicle, always take the key with you and lock the vehicle.
- Keep the vehicle key out of reach of children.

This also applies to the Digital Vehicle Key if the "Digital Vehicle Key" function is activated via Mercedes me connect.

WARNING Risk of fatal injury due to exposure to extreme heat or cold in the vehicle

If people –particularly children – are exposed to extreme temperatures over an extended period of time, there is a risk of serious or even fatal injury!

- Never leave anyone – particularly children – unattended in the vehicle.
- Never leave animals in the vehicle unattended.

Overview of recommended child restraint systems

Further information on the correct child restraint system can be obtained at a qualified specialist workshop. Mercedes-Benz recommends that you use a Mercedes-Benz Service Centre for this purpose.

Securing with ISOFIX

Weight category Size category	Type[1] Type approval number	Order number[2]
	1 Manufacturer: Britax Römer	2 With colour code 9H95
Category 0+: up to 13 kg and up to approx. 15 months **Size category E**	BABY SAFE plus E1 04 301 146	B6 6 86 8224
Category I: 9 to 18 kg **Size category B1**	DUO plus E1 04 301 133	A 000 970 17 02

Securing with the vehicle seat belt

Weight category	Type[1] Type approval number	Order number[2]
	1 Manufacturer: Britax Römer	2 With colour code 9H95
Category 0: up to 10 kg and up to approx. 6 months	BABY SAFE plus II E1 04 301 146	A 000 970 13 02
Category 0+: up to 13 kg and up to approx. 15 months	BABY SAFE plus II E1 04 301 146	A 000 970 13 02
Category I: 9 to 18 kg and from approximately 9 months to 4 years	DUO plus E1 04 301 133	A 000 970 17 02
Category II/III: 15 to 36 kg and from approximately 4 to 12 years	KIDFIX XP E1 04 301 304	A 000 970 23 02

Overview of suitable seats in the vehicle for fitting a child restraint system

Securing systems for child restraint systems

Vehicle seat		
Left/right rear seat	Preferred securing system: ISOFIX child seat securing system (→ page 61) or i-Size child seat securing system (→ page 64) Also secure Top Tether if present (→ page 67)	Alternative securing system: • Vehicle seat belt (→ page 69)
Front passenger seat	Securing system: • Vehicle seat belt (→ page 69)	Be sure to observe: • If the front passenger seat is occupied, ensure, both before and during the journey, that the status of the front passenger airbag is correct for the current situation (→ page 48). • Notes on automatic front passenger airbag shut-off (→ page 46).

Vehicle seat		
Centre rear seat	Securing system: • Vehicle seat belt (⟶ page 69)	

Approval categories for child restraint systems

Only use approved child restraint systems

Only child restraint systems that meet the following UNECE standards are permitted for use in the vehicle:

- UN-R44
- UN-R129 (i-Size child restraint systems)

Identification on the child restraint system

Information about the approval category, weight category and approval number, for example, is on the approval label on the child restraint system.

There may be further information such as the ISOFIX size categories, depending on the approval category of the child restraint system.

Approval categories in accordance with UN-R44

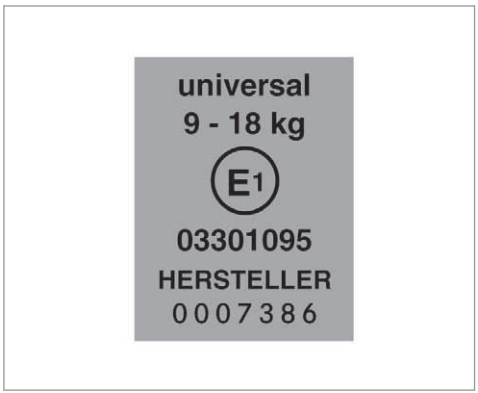

Example of an approval label

- **Universal:** child restraint systems in the "Universal" category are approved for installation in vehicles. They can be used, in accordance with overviews of the suitability of seats for securing child restraint systems, on seats labelled U, UF or IUF.

  The identification IUF refers to ISOFIX child restraint systems in the "Universal" category. These child restraint systems must also be secured using Top Tether or support points.
- **Semi-Universal:** child restraint systems in the "Semi-Universal" category may only be used if the vehicle and vehicle seat are listed in the child restraint system manufacturer's vehicle model list.
- **Vehicle-specific:** child restraint systems in the "vehicle-specific" category may only be used if the vehicle and vehicle seat are listed

in the child restraint system manufacturer's vehicle model list.

Approval categories in accordance with UN-R129

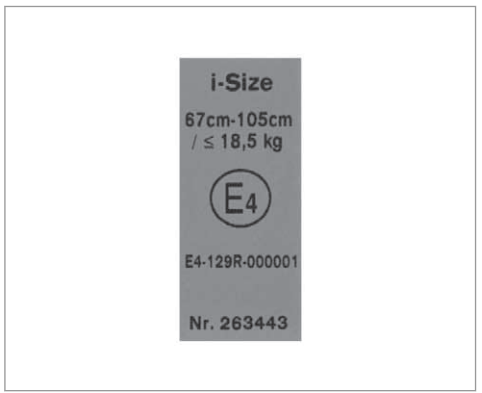

Example of an approval label

- **i-Size:** child restraint systems in the "i-Size" category are approved for installation in vehicles with i-Size mounting brackets. They can be used, in accordance with overviews of the suitability of seats for securing child restraint systems, on seats labelled i-U.

  The identification i-U refers to i-Size child restraint systems in the "Universal" category.

Observe the suitability of vehicle seats

Depending on the approval category, there are forward-facing and rearward-facing child restraint systems. Their use can be restricted for certain vehicle seats:

- Suitability of seats for securing ISOFIX child restraint systems (→ page 61).
- Suitability of seats for securing i-Size child restraint systems (→ page 64).
- Suitability of seats for securing belt-secured child restraint systems (→ page 69)

Fitting the ISOFIX or i-Size child restraint system on the rear seat

Overview of suitability of the seats for attaching ISOFIX child restraint systems

	ISOFIX identification
	ISOFIX is a standardised securing system for specially designed restraint systems. • The symbol indicates seats suitable for attaching an ISOFIX child restraint system in accordance with UN R44 (→ page 59). • Attach only child restraint systems that are approved in accordance with UN R44 as per the following ISOFIX tables.

Carry cot

Size class:	Equipment:	Left/right rear seat
F	ISO/L1	X
G	ISO/L2	X
		X Not suitable for an ISOFIX child restraint system in this weight group and/or size class.

Weight group 0 (up to 10 kg and up to approx. 6 months)

Size class:	Equipment:	Left/right rear seat
E	ISO/R1	IL
		IL Suitable for ISOFIX child restraint systems according to the table in "Overview of the recommended child restraint systems", or if the vehicle and the seat are listed on the child restraint system manufacturer's vehicle model list.

Weight group 0+ (up to 13 kg and up to approx. 15 months)

Size class:	Equipment:	Left/right rear seat
E	ISO/R1	IL
D	ISO/R2, ISO/R2X	IL
C	ISO/R3	IL (1)
		IL Suitable for ISOFIX child restraint systems according to the table in "Overview of the recommended child restraint systems", or if the vehicle and the seat are listed on the child restraint system manufacturer's vehicle model list. (1) When using a child restraint system of size class (ISO/R3), move the front seat into the highest position. Make sure that the seat backrest of the front seat does not rest against the child restraint system.

Weight group 1 (9–18 kg and approx. 9 months to 4 years)

Size class:	Equipment:	Left/right rear seat
D	ISO/R2, ISO/R2X	IL
C	ISO/R3	IL (1)
B	ISO/F2	IUF
B1	ISO/F2X	IUF
A	ISO/F3	IUF
		IL Suitable for ISOFIX child restraint systems according to the table in "Overview of the recommended child restraint systems", or if the vehicle and the seat are listed on the child restraint system manufacturer's vehicle model list. IUF Suitable for forward-facing ISOFIX child restraint systems of the "Universal" category in this weight group. (1) When using a child restraint system of size class (ISO/R3), move the front seat into the highest position. Make sure that the seat backrest of the front seat does not rest against the child restraint system.

Overview of suitability of the seats for attaching i-Size child restraint systems

	i-Size identification
	i-Size is a standardised securing system for specially designed restraint systems. • The symbol indicates seats suitable for attaching an i-Size child restraint system in accordance with UN R129 (→ page 59). • It is possible to attach child restraint systems that are permitted in accordance with - UN R44 as per the ISOFIX tables (→ page 61), or - UN R129 as per the following i-Size tables

	Front passenger seat	Left/right rear seat
i-Size child restraint system (ISO/R2, ISO/F2X, ISO/B2, ISO/B3)	X	i-U
	X Not suitable for an i-Size child restraint system in the "Universal" category.	i-U Suitable for forward-facing and rearward-facing i-Size child restraint systems in the "Universal" category.

Fitting the ISOFIX or i-Size child restraint system on the rear seat

⚠ **WARNING** Risk of injury if the rear bench seat/rear seat and seat backrest are not engaged

If the rear bench seat/rear seat and seat backrest are not engaged they could fold forwards, e.g. when braking suddenly or in the event of an accident.

- If this is the case, the vehicle occupant would be forced into the seat belt by the rear bench seat/rear seat or by the seat backrest. The seat belt cannot protect as intended and could result in additional injury.
- Objects or loads in the boot/load compartment cannot be restrained by the seat backrest.

▶ Make sure that the seat backrest and the rear bench seat/rear seat are engaged before every trip.

If the rear seat backrest is not engaged and locked in place, the red lock verification indicator will be visible.

⚠ **WARNING** -Risk of injury or death if the permissible gross mass of the child and child restraint system is exceeded

For ISOFIX or i-Size child restraint systems in which the child is secured using the seat belt integrated in the child restraint system, the permissible gross mass of the child and child restraint system is 33 kg.

If the child and the child restraint system together weigh more than 33 kg, the ISOFIX or i-Size child restraint system with integrated seat belt does not offer sufficient protection. Too much load may be placed on the ISOFIX or i-Size child restraint systems and the child may not be restrained correctly in the event of an accident, for example.

▶ If the child and the child restraint system together weigh more than 33 kg, use only an ISOFIX or i-Size child restraint system with which the child is secured with the vehicle seat belt.

▶ Also secure the child restraint system with the Top Tether belt, if available.

Always comply with the information about the mass of the child restraint system:

- in the manufacturer's installation and operating instructions for the child restraint system used
- on a label on the child restraint system, if present

Regularly check that the permissible gross mass of the child and child restraint system is still complied with.

When fitting a child restraint system, observe the following:

☑ Always observe the correct use of the seats and consider their suitability for attaching a child restraint system.

ISOFIX child seat securing system (→ page 61)

or

i-Size child seat securing system (→ page 64)

- ☑ Always comply with the manufacturer's installation and operating instructions for the child restraint system used.
- ☑ Make sure that the child's feet do not come into contact with the front seat. If necessary, move the front seat forward slightly.

When fitting an ISOFIX child restraint system, also observe the following:

- ☑ **When using a Group 0/0+ baby car seat and a Group 1 rearward-facing child restraint system on a rear seat:** adjust the front seat so that the seat does not touch the child restraint system.
- ☑ **When using a Group 1 forward-facing child restraint system:** remove the head restraint from the respective seat, if possible. In addition, the backrest of the child restraint system must, as far as possible, lie flat against the backrest of the vehicle seat.

  Once the child restraint system has been removed, replace the head restraints immediately and adjust them correctly.
- ☑ For certain child restraint systems in weight group 2 or 3, there may be restrictions on the maximum size setting, e.g. due to possible contact with the roof.
- ☑ The child restraint system must not be tensioned between the roof and the seat cushion and/or be fitted facing the wrong direction. Where possible, adjust the seat cushion inclination accordingly.
- ☑ The child restraint system must not be put under strain by the head restraints. Adjust the head restraints accordingly.

When fitting an i-Size child restraint system, also observe the following:

- ☑ **When using a rearward-facing child restraint system:** adjust the front seat so that it does not touch the child restraint system.
- ☑ **When using a forward-facing child restraint system:** remove the head restraint from the respective seat, if possible. In addition, the backrest of the child restraint system must, as far as possible, lie flat against the backrest of the vehicle seat.

  Once the child restraint system has been removed, replace the head restraints immediately and adjust them correctly.

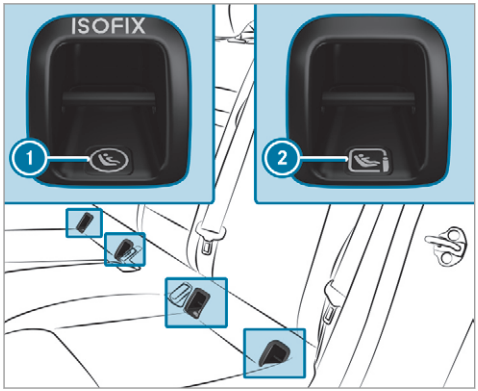

① ISOFIX mounting bracket
② i-Size mounting bracket

Before every journey, make sure that the ISOFIX child restraint system or the i-Size child restraint system is engaged correctly in both mounting brackets in the vehicle.

NOTE Be careful not to damage the seat belt for the centre seat when fitting the child restraint system

- Make sure that the seat belt is not trapped.

- Attach the ISOFIX or i-Size child restraint system to both mounting brackets in the vehicle.

Securing a Top Tether

WARNING Risk of injury or death if the rear seat backrests are not locked after fitting Top Tether belts

If the rear seat backrests are not locked, they could fold forwards in the event of an accident, heavy braking or sudden changes of direction.

As a result, child restraint systems cannot perform their intended protective function. Rear seat backrests that are not locked can also cause additional injuries, e.g. in the event of an accident.

- Always lock rear seat backrests after fitting Top Tether belts.
- Observe the lock verification indicator.

If the rear seat backrest is not engaged and locked in place, the red lock verification indicator will be visible.

If the child restraint system is equipped with a Top Tether belt:

The risk of injury can be reduced by a Top Tether. The Top Tether belt facilitates an additional connection between the child restraint system attached with ISOFIX or i-Size and the vehicle.

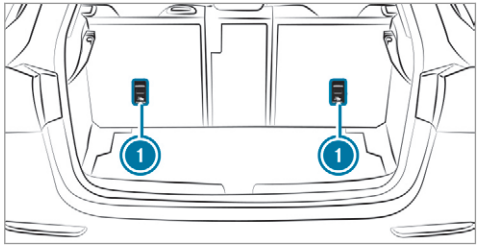

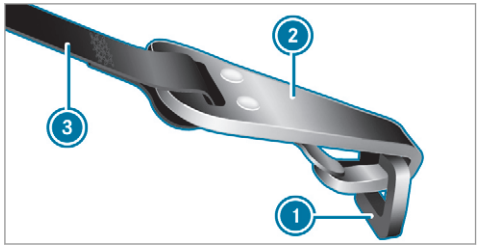

Vehicles with adjustable head restraints:

- If necessary, slide the head restraint upwards (→ page 105).
- Guide the Top Tether belt (3) under the head restraint between the two head restraint bars.

Vehicles without adjustable head restraints:

- Top Tether belt with a seat belt strap: guide the Top Tether belt (3) over the centre of the head restraint.

or

- Top Tether belt with two seat belt straps: guide one Top Tether belt (3) past the head restraint on the right and left side respectively.

All vehicles:

- Fit the ISOFIX or i-Size child restraint system with Top Tether. Comply with the child restraint system manufacturer's installation instructions when doing so.
- Hook Top Tether hook (2) into Top Tether anchorage (1) without twisting.
- Tension the Top Tether belt (3). Comply with the child restraint system manufacturer's installation instructions when doing so.

Vehicles with adjustable head restraints:

- If necessary, slide the head restraint downwards (→ page 105). Make sure that you do not interfere with the correct routing of the Top Tether belt (3).

Securing the child restraint system with the seat belt

Notes on the suitability of seats for attaching belt-secured child restraint systems
Rear seats

Weight category	Left/right rear seat	Centre rear seat[1]
		1 Child restraint systems with a supporting bracket are not suitable for this seat.
Category 0: up to 10 kg	U, L	U, L
Category 0+: up to 13 kg	U, L	U, L
Category I: 9 to 18 kg	U, L	U, L
Category II: 15 to 25 kg	U, L	U, L
Category III: 22 to 36 kg	U, L	U, L
	U Suitable for child restraint systems of the "Universal" category in this weight category. L Suitable for semi-universal child restraint systems according to the table in "Recommended child restraint systems", or if the vehicle and the seat are listed in the child restraint system manufacturer's vehicle model list.	

Front passenger seat – Notes

Notes on child restraint systems on the front passenger seat
• If it is absolutely necessary for you to fit a child restraint system to the front passenger seat, be sure to observe the information on child restraint systems on the front passenger seat (→ page 74). Observe the specific instructions for the rearward-facing and forward-facing child restraint systems. If the front passenger seat is occupied, ensure, both before and during the journey, that the status of the front passenger airbag is correct for the current situation (→ page 48).

Front passenger seat

Weight category	Front passenger airbag enabled[1]	Front passenger airbag disabled[1, 2]
	1 Adjust the seat cushion inclination so that the front edge of the seat cushion is in the highest position and the rear edge of the seat cushion is in the lowest position.	2 The vehicle is equipped with automatic front passenger airbag shutoff. The PASSENGER AIR BAG OFF indicator lamp must be lit.
Category 0: up to 10 kg	X	U, L
Category 0+: up to 13 kg	X	U, L
Category I: 9 to 18 kg	UF, L	U, L
Category II: 15 to 25 kg	UF, L	U, L

Weight category	Front passenger airbag enabled[1]	Front passenger airbag disabled[1, 2]
Category III: 22 to 36 kg	UF, L	U, L
	X Not suitable for children in this weight category. UF Suitable for forward-facing child restraint systems of the "Universal" category in this weight category.	L Suitable for semi-universal child restraint systems according to the table in "Recommended child restraint systems", or if the vehicle and the seat are listed in the child restraint system manufacturer's vehicle model list. U Suitable for child restraint systems of the "Universal" category in this weight category.

Securing the child restraint system with the seat belt on the rear seat

⚠ **WARNING** Risk of injury if the rear bench seat/rear seat and seat backrest are not engaged

If the rear bench seat/rear seat and seat backrest are not engaged they could fold forwards, e.g. when braking suddenly or in the event of an accident.

- If this is the case, the vehicle occupant would be forced into the seat belt by the rear bench seat/rear seat or by the seat backrest. The seat belt cannot protect as intended and could result in additional injury.
- Objects or loads in the boot/load compartment cannot be restrained by the seat backrest.

▶ Make sure that the seat backrest and the rear bench seat/rear seat are engaged before every trip.

If the rear seat backrest is not engaged and locked in place, the red lock verification indicator will be visible.

When fitting a belt-secured child restraint system, observe the following:

☑ Always comply with the manufacturer's installation and operating instructions for the child restraint system used.

☑ For a child restraint system in the "Universal" or "Semi-Universal" category, make sure that the system has been approved for the vehicle seat.

Observe the notes under "Suitability of seats for attaching belt-secured child restraint systems" (→ page 69).

☑ **When using a category 0/0+ baby car seat and a category I rearward-facing child restraint system on a rear seat:** adjust the front seat so that the seat does not touch the child restraint system.

☑ **When using a category I forward-facing child restraint system:** remove the head restraint from the respective seat, if possible.

After the child restraint system has been removed, replace the head restraints immediately and adjust them correctly.

☑ The backrest of the forward-facing child restraint system must, as far as possible, be resting on the seat backrest of the rear seat.

☑ For certain child restraint systems in weight category II or III, there may be restrictions on the maximum size setting, e.g. due to possible contact with the roof.

☑ The child restraint system must not be put under strain between the roof and the seat cushion and/or be fitted facing the wrong direction. Where possible, adjust the seat cushion inclination accordingly.

☑ The child restraint system must not be put under strain by the head restraint. Adjust the head restraints accordingly.

☑ Make sure that the child's feet do not touch the front seat. If necessary, move the front seat slightly forwards.

▶ Fit the child restraint system.
The entire base of the child restraint system must always rest on the sitting surface of the rear seat.

▶ Always make sure that the shoulder belt strap is correctly routed from the seat belt outlet of the vehicle to the shoulder belt guide on the child restraint system.
The shoulder belt strap must be routed forwards and downwards from the seat belt outlet.

Notes on vehicles without automatic front passenger airbag shutoff



Sticker visible when the front passenger door is open

Vehicles without automatic front passenger airbag shutoff have a special sticker affixed to the side of the cockpit on the front passenger side.

Make sure you observe the following information:

- Never fit a rearward-facing child restraint system to the front passenger seat
- Always fit a rearward-facing child restraint system to a suitable rear seat
  - Suitability of seats for attaching belt-secured child restraint systems (→ page 69)
  - Secure the child restraint system with the seat belt on the rear seat (→ page 71).
- Notes on rearward-facing and forward-facing child restraint systems on the front passenger seat (→ page 73)

Notes on rearward-facing and forward-facing child restraint systems on the front passenger seat

⚠ **WARNING** Risk of injury or death from using a rearward-facing child restraint system when the front passenger front airbag is enabled

If you secure a child in a rearward-facing child restraint system on the front passenger seat and the PASSENGER AIR BAG OFF indicator lamp is off, the front passenger airbag can deploy in the event of an accident.

The child could be struck by the airbag.

Always ensure that the front passenger airbag is disabled. The PASSENGER AIR BAG OFF indicator lamp must be lit.

NEVER use a rearward-facing child restraint system on a seat protected by an ENABLED FRONT AIRBAG in front of it, DEATH or SERIOUS INJURY to the CHILD can occur.

Observe the specific instructions for the rearward-facing and forward-facing child restraint systems (→ page 74).

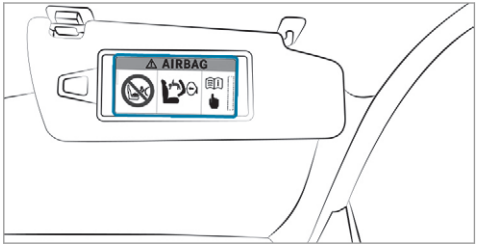

Warning notice on the front passenger sun visor

Always observe the status of the front passenger airbag on the PASSENGER AIR BAG OFF indicator lamp:

- If it is absolutely necessary to fit a child restraint system to the front passenger seat, always observe the information on automatic front passenger airbag shutoff (→ page 46).
- When using a rearward-facing child restraint system on the front passenger seat, the front

passenger airbag must always be disabled. This is only the case if the PASSENGER AIR BAG OFF indicator lamp is lit continuously (→ page 48).

- If the PASSENGER AIR BAG OFF indicator lamp is off, the front passenger airbag is enabled. The front passenger airbag may deploy during an accident.

Securing the child restraint system with the seat belt on the front passenger seat

When fitting a belt-secured child restraint system on the front passenger seat, always observe the following:

☑ Observe the child restraint system manufacturer's installation and operating instructions.

☑ For a child restraint system in the "Universal" or "Semi-Universal" category, make sure that the system has been approved for the vehicle seat.

Observe the notes under "Suitability of seats for attaching belt-secured child restraint systems" (→ page 69).

☑ When using a forward-facing child restraint system in category I: remove the head restraint from the respective seat, if possible.

After the child restraint system has been removed, replace the head restraints immediately and adjust them correctly.

☑ The backrest of the forward-facing child restraint system must, as far as possible, be resting on the seat backrest of the front passenger seat.

☑ For certain child restraint systems in weight category II or III, there may be restrictions on the maximum size setting, e.g. due to possible contact with the roof.

☑ The child restraint system must not be tensioned between the roof and the seat cushion and/or be fitted facing the wrong direction.

☑ The child restraint system must not be put under strain by the head restraints. Adjust the head restraints accordingly.

☑ Never place objects under or behind the child restraint system, e.g. cushions.

▶ Set the front passenger seat as far back as possible and move the seat into the highest position if possible.

▶ Adjust the seat cushion inclination so that the front edge of the seat cushion is in the highest position and the rear edge of the seat cushion is in the lowest position.

▶ Set the seat backrest to the most vertical position possible.

▶ Fit the child restraint system.
The entire base of the child restraint system must always rest on the sitting surface of the front passenger seat.

▶ Always make sure that the shoulder belt strap is correctly routed from the seat belt outlet of the vehicle to the shoulder belt guide on the child restraint system.
The shoulder belt strap must be routed forwards and downwards from the seat belt outlet.

▶ If necessary, adjust the front passenger seat accordingly.

Child safety locks

Activating/deactivating the child safety lock for the rear doors

WARNING Risk of accident and injury due to children left unattended in the vehicle

If children are left unattended in the vehicle, they could:

- Open doors, thereby endangering other persons or road users.
- Get out and be struck by oncoming traffic.
- Operate vehicle equipment and become trapped, for example.

In addition, the children could also set the vehicle in motion, for example by:

- Releasing the parking brake.
- Changing the transmission position.
- Starting the vehicle.

- ▶ Never leave children unattended in the vehicle.
- ▶ When leaving the vehicle, always take the key with you and lock the vehicle.
- ▶ Keep the vehicle key out of reach of children.

This also applies to the Digital Vehicle Key if the "Digital Vehicle Key" function is activated via Mercedes me connect.

WARNING Risk of fatal injury due to exposure to extreme heat or cold in the vehicle

If people –particularly children – are exposed to extreme temperatures over an extended period of time, there is a risk of serious or even fatal injury!

- ▶ Never leave anyone – particularly children – unattended in the vehicle.
- ▶ Never leave animals in the vehicle unattended.

WARNING Risk of accident and injury due to children left unattended in the vehicle

If children are travelling in the vehicle, they could, in particular:

- open doors, thereby endangering other persons or road users
- get out and be struck by oncoming traffic
- operate vehicle equipment and become trapped, for example

- ▶ Always activate the child safety locks installed if children are travelling in the vehicle.
- ▶ Never leave children unattended in the vehicle.
- ▶ When leaving the vehicle, always take the key with you and lock the vehicle. This also applies to the Digital Vehicle Key if the "Digital Vehicle Key" function is activated via Mercedes me connect.

Vehicles for the United Kingdom: observe the important safety notes in the "Notes on the additional door lock" section.

There are child safety locks for the rear doors and the rear side windows.
The child safety lock on the rear doors secures each door separately. The doors can no longer be opened from the inside.

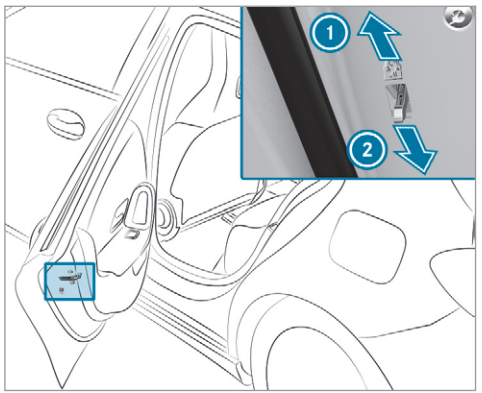

- Press the lever in direction 1 (activate) or 2 (deactivate).
- Make sure that the child safety locks are working properly.

Activating/deactivating the child safety lock for the rear side windows

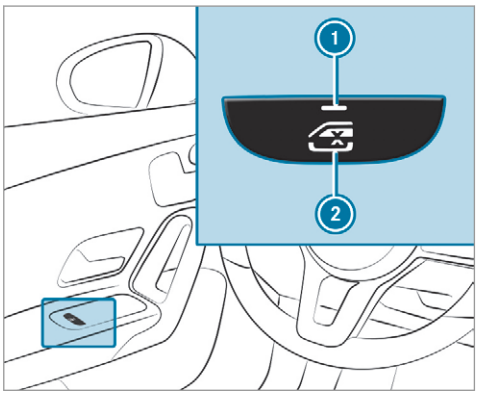

- **To activate/deactivate:** press button 2.

The rear side window can be opened or closed in the following cases:

- With indicator lamp 1 lit: via the switch on the driver's door.
- With indicator lamp 1 off: via the switch on the corresponding rear door or driver's door.

Notes on pets in the vehicle

WARNING Risk of accident and injury due to animals left unsecured or unattended in the vehicle

If you leave animals in the vehicle unattended or unsecured, they could possibly press down buttons or switches.

Thereby an animal may:

- activate vehicle equipment and become trapped, for example
- switch systems on or off and endanger other road users

Unsecured animals may be thrown around in the vehicle in the event of an accident or sudden steering and braking manoeuvres and injure vehicle occupants in the process.

- Never leave animals in the vehicle unattended.
- Always correctly secure animals while driving, e.g. using a suitable animal carrier.

Key

Overview of key functions

WARNING Risk of accident and injury due to children left unattended in the vehicle

If children are left unattended in the vehicle, they could:

- Open doors, thereby endangering other persons or road users.
- Get out and be struck by oncoming traffic.
- Operate vehicle equipment and become trapped, for example.

In addition, the children could also set the vehicle in motion, for example by:

- Releasing the parking brake.
- Changing the transmission position.
- Starting the vehicle.

▶ Never leave children unattended in the vehicle.

▶ When leaving the vehicle, always take the key with you and lock the vehicle.

▶ Keep the vehicle key out of reach of children.

This also applies to the Digital Vehicle Key if the "Digital Vehicle Key" function is activated via Mercedes me connect.

NOTE Damage to the key caused by magnetic fields

▶ Keep the key away from strong magnetic fields.

ⓘ The key may vary from the one shown in the diagram, depending on the vehicle equipment.

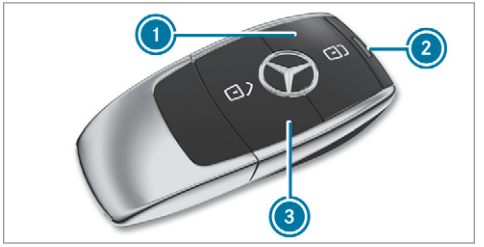

① Locks
② Indicator lamp
③ Unlocks

ⓘ If indicator lamp ② does not light up after pressing the [ ] or [ ] button, the battery is discharged.

Changing the key battery (→ page 80).

The key locks and unlocks the following components:

- the doors
- the fuel filler flap
- the tailgate

If the vehicle is not opened within approximately 40 seconds after unlocking, it locks again. Anti-theft protection is primed again.

Do not keep the key together with electronic devices or metal objects. This can affect the key's functionality.

Indicator lamp of the vehicle lock

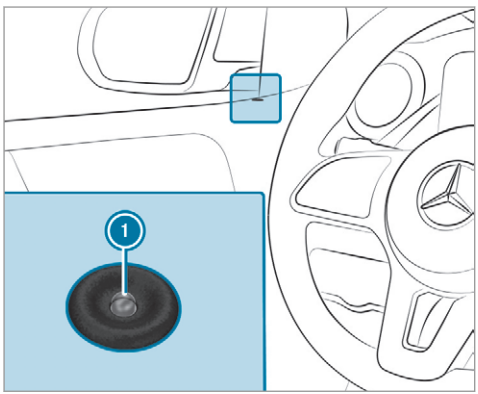

Indicator lamp 1 in the trim on the driver's side flashes when the vehicle is locked from outside. Indicator lamp 1 remains off if the vehicle is locked from inside or while the vehicle is in motion.

Activating/deactivating the acoustic locking verification signal

Multimedia system:

↳ ⌂ ⏩ Settings ⏩ Vehicle

▶ Activate or deactivate Acoustic lock.

ⓘ **Please note:**
The selected setting for the acoustic locking verification signal must comply with the relevant national road and traffic regulations. In some countries, including Germany, using the acoustic locking verification signal is forbidden by traffic laws (in accordance with §16 Para. 1 and §30 Para. 1 of the German national road traffic regulations). The driver of the vehicle must comply with these regulations. In countries where the use of this function is forbidden, this function is not activated in the vehicle and must not be activated.

Changing the unlocking settings

Possible unlocking functions of the key:

- central unlocking
- unlocking the driver's door and fuel filler flap

▶ **To switch between settings:** press the 🔓 and 🔓 buttons simultaneously for approximately six seconds until the indicator lamp flashes twice.

Options if the unlocking function for the driver's door and fuel filler flap has been selected:

- **To unlock the vehicle centrally:** press the 🔓 button twice.
- **Vehicles with KEYLESS-GO:** if you touch the inner surface of the door handle on the driver's door, only the driver's door and fuel filler flap are unlocked.

Deactivating the key functions

If you do not use the vehicle or a key for an extended period of time, you can reduce the energy consumption of the respective key. To do so, deactivate the key functions.

- **To deactivate:** press the button on the key twice in quick succession.
  The key indicator lamp flashes twice briefly and lights up once.
- **To activate:** press any button on the key.

ⓘ When the vehicle is started with the key in the stowage compartment of the centre console, the key functions are automatically activated (→ page 167).

Removing/inserting the emergency key

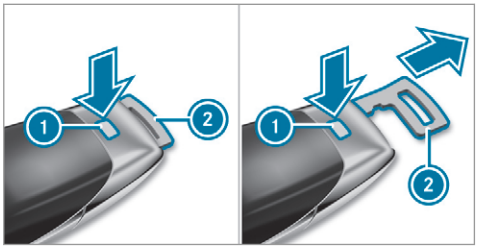

- **To remove:** press release knob (1).
  Emergency key (2) is pushed out slightly.
- Pull out emergency key (2) until it engages in the intermediate position.

ⓘ Depending on the vehicle's equipment, the intermediate position is not available.

- Press release knob (1) again and fully remove emergency key (2).
- **To insert:** press release knob (1).
- Insert emergency key (2) to the intermediate position or fully until it engages.

ⓘ You can use the intermediate position of emergency key (2) to attach the key to a key ring.

Replacing the key battery

⚠ **DANGER** Serious damage to health caused by swallowing batteries

Batteries contain toxic and corrosive substances. Swallowing batteries may cause serious damage to health.

There is a risk of fatal injury.

- Keep batteries out of the reach of children.
- If batteries are swallowed, seek medical attention immediately.

ENVIRONMENTAL NOTE Environmental damage due to improper disposal of batteries

Batteries contain pollutants. It is illegal to dispose of them with the household rubbish.

- Dispose of batteries in an environmentally responsible manner. Take discharged batteries to a qualified specialist workshop or to a collection point for used batteries.

Requirements:

- You require a CR 2032 3 V cell battery.

Mercedes-Benz recommends that you have the battery replaced at a qualified specialist workshop.

- Remove the emergency key (→ page 80).

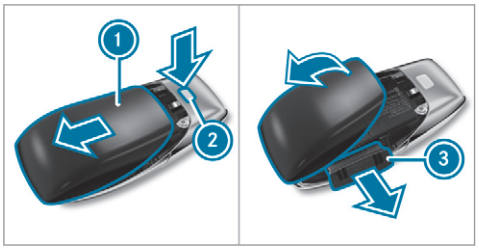

- Press release knob 2 down fully and slide cover 1 in the direction of the arrow.
- Fold out cover 1 in the direction of the arrow and remove.
- Remove battery compartment 3 and take out the discharged battery.
- Insert the new battery into battery compartment 3. Observe the positive pole marking in the battery compartment and on the battery when doing this.
- Push in battery compartment 3.
- Re-attach cover 1 and push it until it engages.

Problems with the key

Problem	Possible causes/consequences and ▶ Solutions
You can no longer lock or unlock the vehicle.	Possible causes: • The key battery is weak or discharged. • There is interference from a powerful radio signal source. • The key is faulty. ▶ Check the battery using the indicator lamp and replace if necessary (→ page 80). ▶ Use the emergency key to lock or unlock (→ page 80). ▶ Have the key checked at a qualified specialist workshop.
You have lost a key.	▶ Have the key deactivated at a qualified specialist workshop. ▶ If necessary, have the mechanical lock replaced as well.

Doors

Notes on the additional door lock

The additional door lock is only available for vehicles for the United Kingdom.

⚠ **WARNING** Risk of injury to persons inside the vehicle when the additional door lock is activated

If the additional door lock is activated, the doors can no longer be opened from the inside.

If there are persons in the vehicle, they can no longer leave the vehicle, e.g. in hazardous situations.

▶ Never leave persons unattended in the vehicle, particularly children, elderly persons or persons in need of help.

▶ If there are persons in the vehicle, do not activate the additional door lock.

The additional door lock is automatically activated in the following situations:

- The vehicle is locked using the key.
- The vehicle is locked using KEYLESS-GO.

If the vehicle has been locked via Mercedes me connect, the additional door lock is not activated.

If the additional door lock is activated, the doors cannot be opened from the inside.

ⓘ After locking you can issue a signal with the horn.

You can prevent the additional door lock from being activated by deactivating interior protection before locking the vehicle (→ page 101).

Unlocking/opening the doors from the inside

▶ **United Kingdom only:** observe the notes on the additional door lock (→ page 82).

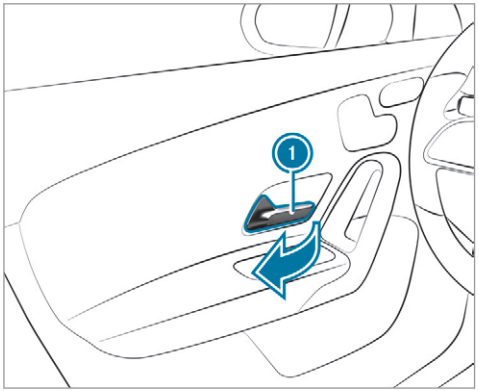

▶ Pull door handle ①.

Centrally locking and unlocking the vehicle from the inside

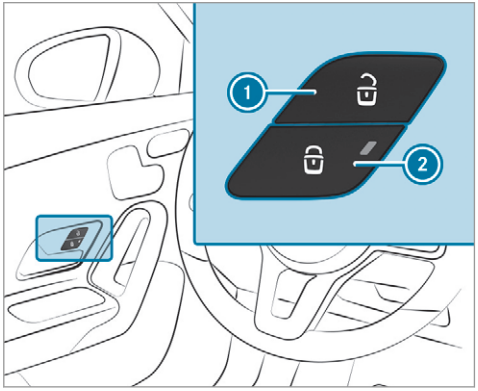

▶ **To unlock:** press button ①.

▶ **To lock:** press button ②.
The indicator lamp lights up.

This does not lock or unlock the fuel filler flap.

The vehicle is not unlocked:

- If you have locked the vehicle using the key.
- If you have locked the vehicle using KEYLESS-GO.

Locking/unlocking the vehicle with a Digital Vehicle Key

Requirements:

- one of the following versions of the Digital Vehicle Key is available:
  - suitable mobile phone
  - Digital Vehicle Key sticker
- the vehicle is equipped with the "Digital Vehicle Key" function.
- the "Digital Vehicle Key" function is activated via Mercedes me connect: https://www.mercedes.me.
- the mobile phone is sufficiently charged.

ⓘ You can check the suitability of your mobile phone by entering the phone number at https://www.mercedes.me.

Information about suitable mobile phones can be obtained from your Mercedes-Benz Service Centre or at https://www.mercedes-benz.com/connect.

ⓘ Mercedes-Benz recommends that you carry the emergency key in case of function restrictions.

ⓘ The function is only available in combination with Mercedes me connect and only in certain countries.

ⓘ Protective cases around the mobile phone can impair the functionality.

If the vehicle has been parked for longer than two weeks, the NFC aerial in the door handle is deactivated.

▶ Pull the door handle.
The NFC aerial is activated.

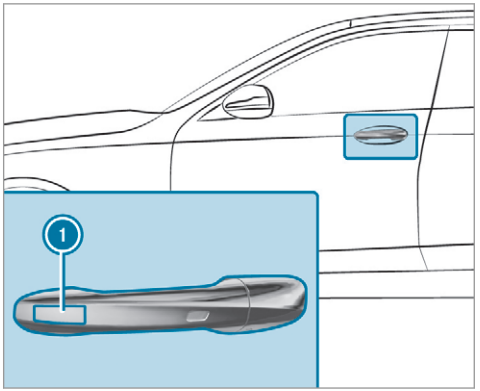

▶ Touch the door handle on the driver's door in the area where NFC aerial ① is located with the part of the Digital Vehicle Key where the NFC aerial is located.
The vehicle is locked or unlocked alternately.

If you lose the Digital Vehicle Key, deactivate the "Digital Vehicle Key" service in Mercedes me connect via https://www.mercedes.me.

Locking/unlocking the vehicle with KEYLESS-GO

Requirements:

- The key is outside the vehicle.
- The distance between the key and the vehicle does not exceed 1 m.
- The driver's door and the door at which the door handle is used are closed.

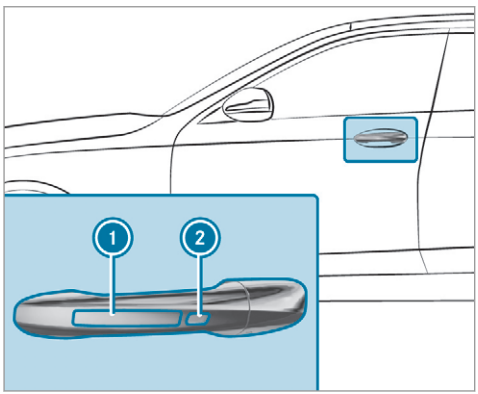

- **To unlock the vehicle:** touch the inner surface of the door handle.
- **To lock the vehicle:** touch sensor surface 1 or 2.
- **Convenience closing:** touch recessed sensor surface 2 until the closing process has been completed.

ⓘ Further information on convenience closing (→ page 92).

If you open the tailgate from outside it is automatically unlocked.

Problems with KEYLESS-GO

Problem	Possible causes/consequences and ▶ Solutions
You can no longer lock or unlock the vehicle using KEYLESS-GO.	Possible causes: • The key functions have been deactivated (→ page 80). • The key battery is weak or discharged. • There is interference from a powerful radio signal source. • The key is faulty. ▶ Activate the key functions (→ page 80). ▶ Check the battery using the indicator lamp and replace if necessary (→ page 80). ▶ Use the emergency key to unlock or lock the vehicle (→ page 80). ▶ Have the vehicle and key checked at a qualified specialist workshop.

Activating/deactivating the automatic locking feature

The vehicle is locked automatically when the ignition is switched on and the wheels are turning faster than walking pace.

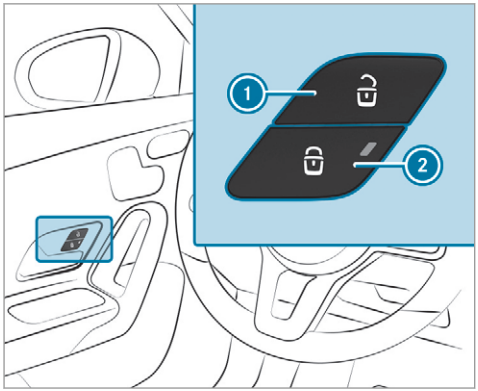

- **To activate:** press and hold button (2) for approximately five seconds until an acoustic signal sounds.
- **To deactivate:** press and hold button (1) for approximately five seconds until an acoustic signal sounds.

When the vehicle is locked automatically, the indicator lamp in button (2) lights up.

In the following situations, there is a danger of being locked out when the function is activated:

- While the vehicle is being tow started/ pushed.
- If the vehicle is being tested on a roller dynamometer.

Locking/unlocking the vehicle with the emergency key

Locking/unlocking the driver's door with the emergency key

ⓘ If you wish to lock the vehicle entirely using the emergency key, first press the button for locking from the inside while the driver's door is open. Then proceed to lock the driver's door using the emergency key.

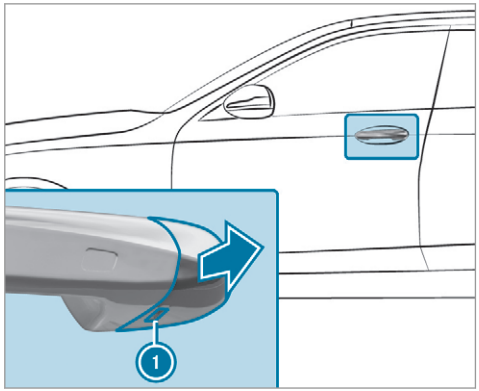

- Insert the emergency key as far as it will go into opening (1) in the cover.
- Pull and hold the door handle.
- Pull the cover on the emergency key as straight as possible away from the vehicle until it releases.
- Release the door handle.

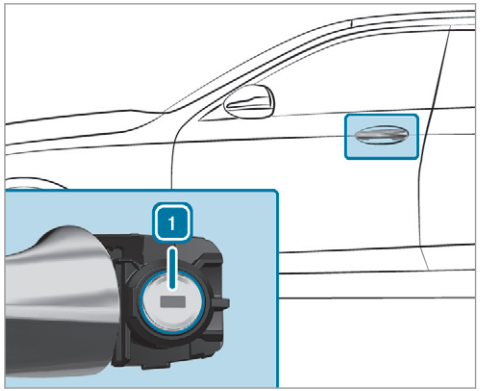

- **To unlock:** turn the emergency key anti-clockwise to position 1.
- **To lock:** turn the emergency key clockwise to position 1.
- Carefully press the cover onto the lock cylinder until it engages and is seated firmly.

Locking the front passenger door and rear doors with the emergency key

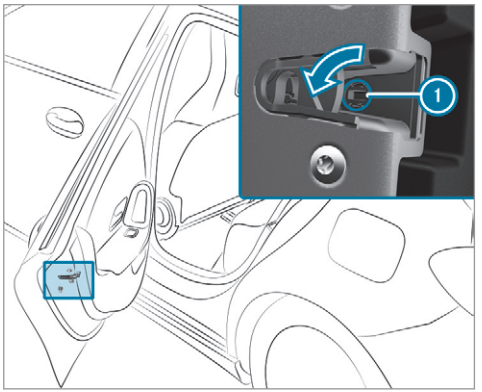

- Insert a suitable object, e.g. the emergency key, into opening (1) on the door lock.
- **To lock the left-hand side of the vehicle:** turn the emergency key anti-clockwise as far as it will go.
- **To lock the right-hand side of the vehicle:** turn the emergency key clockwise as far as it will go.

If the locked door is then closed, it can no longer be opened from outside.

Load compartment

Opening the tailgate

DANGER Risk of exhaust gas poisoning

Combustion engines emit poisonous exhaust gases such as carbon monoxide. Exhaust gases can enter the vehicle interior if the tailgate is open when the engine is running, especially if the vehicle is in motion.

- Always switch off the engine before opening the tailgate.
- Never drive with the tailgate open.

NOTE Damage to the tailgate caused by obstacles above the vehicle

The tailgate swings rearwards and upwards when it is opened.

- Make sure that there is sufficient space behind and above the tailgate.

- Pull the tailgate handle.

Closing the tailgate

WARNING Risk of injury from unsecured items in the vehicle

If objects, luggage or loads are not secured or not secured sufficiently, they could slip, tip over or be thrown around and thereby hit vehicle occupants.

There is a risk of injury, particularly in the event of sudden braking or a sudden change in direction.

- Always stow objects in such a way that they cannot be thrown around.
- Before the journey, secure objects, luggage or loads against slipping or tipping over.

Observe the notes on loading the vehicle.

- Pull the tailgate down with the handle and let it drop into the lock.

Unlocking the tailgate with the emergency key

- Fold the rear seat backrest forward.
- Remove the load compartment cover (→ page 117).

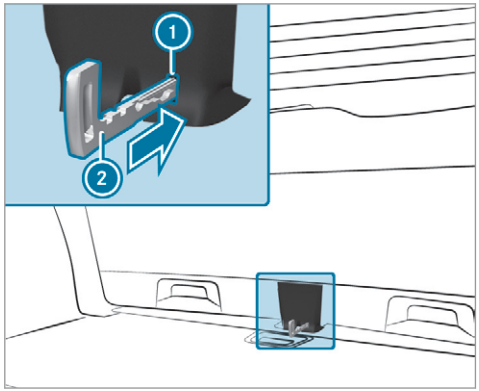

- Insert the emergency key (2) into the opening (1) in the trim and push it in.
The tailgate will be unlocked.

Side windows

Opens and closes the side windows

WARNING Risk of becoming trapped when opening a side window

When you open a side window, parts of the body could be drawn in or become trapped between the side window and window frame.

- When opening, make sure that nobody is touching the side window.
- If someone is trapped, release the button immediately or pull it in order to close the side window again.

WARNING Risk of becoming trapped when closing a side window

When closing a side window, body parts could be trapped in the closing area in the process.

- When closing, make sure that no body parts are in the closing area.
- If someone is trapped, release the button immediately or press the button in order to reopen the side window.

WARNING Risk of becoming trapped when children operate the side windows

Children could become trapped if they operate the side windows, particularly when unattended.

- Activate the override feature for the rear side windows.
- When leaving the vehicle, always take the key with you and lock the vehicle.
- Never leave children unattended in the vehicle.

Requirements:

- The power supply or the ignition is switched on.

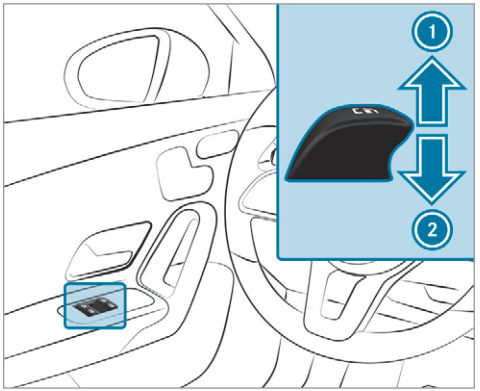

1 Closing
2 Opening

The buttons on the driver's door take precedence.

- **To start automatic operation:** press the button beyond the point of resistance or pull and release it.

▶ **To interrupt automatic operation:** press or pull the button again.

When the vehicle is switched off, the side windows can continue being operated.

This function is available for around four minutes or until a front door is opened.

Automatic reversing function of the side windows

If an object blocks a side window during the closing process, the side window will open again automatically. The automatic reversing function is only an aid and is not a substitute for your attentiveness.

▶ During the closing process, make sure that no body parts are in the closing area.

⚠ **WARNING** Risk of becoming trapped despite there being reversing protection on the side window

The reverse function does not react:

- to soft, light and thin objects, e.g. fingers
- during resetting

This means that the reverse function cannot prevent someone from becoming trapped in these situations.

▶ When closing, make sure that no body parts are in the closing area.

▶ If someone becomes trapped, press the button to open the side window again.

Automatic function of the side windows

In the following cases, the side windows will be closed automatically when the vehicle is switched off:

- if it starts to rain (detection by the rain sensor on the windscreen)
- in extreme temperatures
- after six hours
- if there is a malfunction in the power supply

The side windows will be closed as far as the ventilation position.

Vehicles with a sliding sunroof: the side windows will be closed completely if the sliding sunroof is open.

If the side windows are obstructed during automatic closing, the side window concerned will open again slightly. The automatic function for the sliding sunroof and the side windows will then be deactivated.

Convenience opening (ventilating the vehicle before starting a journey)

⚠ **WARNING** Risk of entrapment when opening a side window

When opening a side window, parts of the body could be drawn in or become trapped between the side window and window frame.

▶ When opening, make sure that nobody is touching the side window.

▶ Release the button immediately if somebody becomes trapped.

▶ Press and hold the button on the key.

The following functions are performed:

- The vehicle is unlocked
- The side windows are opened.
- The panoramic sliding sunroof is opened.
- The seat ventilation of the driver's seat is switched on.

ⓘ If the roller sunblinds of the panoramic sliding sunroof are closed, the roller sunblinds are opened first.

▶ **To interrupt convenience opening:** release the button.

▶ **To continue convenience opening:** press and hold the button again.

Convenience closing (closing the vehicle from outside)

⚠ **WARNING** Risk of entrapment caused by inadvertent convenience closing

When the convenience closing feature is operating, parts of the body could become trapped in the closing area of the side window and the sliding sunroof.

▶ Observe the complete closing procedure when using convenience closing.

▶ When closing, make sure that no body parts are in the closing area.

▶ Press and hold the button on the key.

The following functions are performed:

- The vehicle is locked.
- The side windows are closed.
- The panoramic sliding sunroof is closed.

▶ **To interrupt convenience closing:** release the button.

▶ **To close the roller sunblinds:** press and hold the button again.

ⓘ Convenience closing can also be operated with KEYLESS-GO (→ page 85).

Problems with the side windows

⚠ **WARNING** Risk of becoming trapped or fatally injured if reversing protection is not activated

If you close a side window again immediately after it has been blocked, the side window will close with increased or maximum force. The reversing feature will then not be active.

Parts of the body could become trapped in the closing area in the process.

▶ Make sure that no parts of the body are in the closing area.

▶ To stop the closing process, release the button or press the button again to reopen the side window.

Problem	Possible causes/consequences and ▶ Solutions
A side window cannot be closed and you cannot see the cause.	▶ Check to see whether any objects are in the window guide. ▶ Adjust the side windows. **Adjusting the side windows** If a side window is obstructed during closing and reopens again immediately: ▶ Immediately after this, pull the corresponding button again until the side window has closed, and hold the button for at least one more second (re-adjustment). The side window is closed without the automatic reversing function. If the side window is obstructed again and reopens again immediately: ▶ Immediately after this, pull the corresponding button again until the side window has closed, and hold the button for at least one more second (follow-up adjustment). The side window is closed without the automatic reversing function.
The side windows cannot be opened or closed using the convenience opening feature.	The key battery is weak or discharged. ▶ Check the battery using the indicator lamp and replace it if necessary (→ page 80).

Sliding sunroof

Opening and closing the sliding sunroof

ⓘ The term "sliding sunroof" also refers to the panorama sliding sunroof.

⚠ **WARNING** Risk of becoming trapped while opening and closing the sliding sunroof

During opening and closing, parts of the body could get caught in the sweep of the sliding sunroof.

- When opening or closing, make sure that no body parts are in the sweep.
- Release the button immediately if somebody becomes trapped.

or

- Press the button in any direction during the automatic opening/closing process. The opening/closing process is stopped.

⚠ **WARNING** Risk of entrapment if the sliding sunroof is operated by children

Children operating the sliding sunroof could get caught in the moving parts, particularly if unattended.

- Never leave children unattended in the vehicle.
- When leaving the vehicle, always take the key with you and lock the vehicle.

⚠ **WARNING** Risk of entrapment while opening and closing the roller sunblinds

When opening or closing, make sure that no body parts become trapped between the roller sunblind and frame or sliding sunroof.

- When opening or closing, make sure that no body parts are in the sweep of the roller sunblind.
- Release the switch immediately if somebody becomes trapped.

or

- Press the switch in any direction during the automatic opening/closing process. The opening/closing process is stopped.

! **NOTE** Malfunction caused by snow and ice

Snow and ice may lead to a malfunction of the sliding sunroof.

- Only open the sliding sunroof if it is free of snow and ice.

! **NOTE** Damage caused by protruding objects

Objects that protrude from the sliding sunroof may damage the sealing strips.

- Do not allow anything to protrude from the sliding sunroof.

NOTE Important points to remember when a roof rack is fitted

When a roof rack is fitted, raising or opening the sliding sunroof may be limited.

- Check whether the sliding sunroof can be raised or opened when a roof rack is fitted.
- If in doubt, do not raise or open the sliding sunroof.

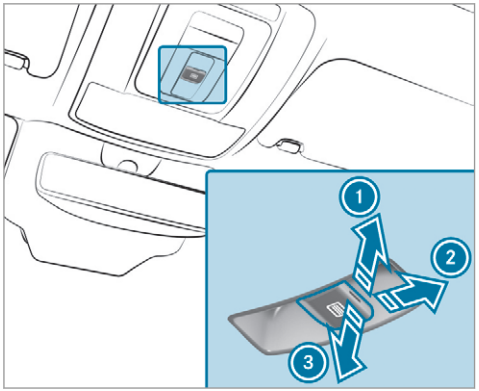

1. Raising
2. Opening
3. Closing/lowering

Use the button to operate the panoramic sliding sunroof and the roller sunblind.

The panorama sliding sunroof can be operated only when the roller sunblind is open.

- Check whether the sliding sunroof can be raised or opened when a roof rack is fitted.
- **To start automatic operation:** press the button beyond the point of resistance or pull and release it.
- **To interrupt automatic operation:** briefly press the button in any direction. The opening/closing process will be stopped.

Automatic reversing function of the sliding sunroof

If an object is obstructing the sliding sunroof during the closing process, the sliding sunroof will open again automatically. The automatic reversing function is only an aid and is not a substitute for your attentiveness.

- During the closing process, make sure that no body parts are in the closing area.

WARNING Risk of entrapment even with the reversing feature active

The reverse function does not react in particular:

- to soft, light and thin objects, e.g. fingers
- over the last 4 mm of the closing path
- during resetting

This means that the reverse function cannot prevent someone from becoming trapped in these situations.

- When closing, make sure that no body parts are in the closing area.
- Release the button immediately if somebody becomes trapped.

or

- Briefly press the button in any direction during automatic operation.
  The closing process is stopped.

Automatic reversing function of the roller sunblind

If an object is obstructing the roller sunblind during the closing process, the roller sunblind will open again automatically. The automatic reversing function is only an aid and is not a substitute for your attentiveness.

- When closing the roller sunblind, make sure that no body parts are in the range of movement.

WARNING Risk of becoming trapped despite reversing function

In particular, the reversing function does not react to soft, light and thin objects, e.g. fingers.

This means that the reversing function cannot prevent entrapment in these situations.

- When closing the roller sunblind, make sure that no body parts are in the range of movement.
- Release the button immediately if somebody becomes trapped.

or

- Press the button in any direction during the automatic closing process.
  The closing process is stopped.

Automatic functions of the sliding sunroof

The term "sliding sunroof" also refers to the panorama sliding sunroof.

By pushing or pulling the button, you can interrupt the automatic functions: "Rain closing function when driving" and "Automatic lowering".

The sliding sunroof will be closed automatically when the vehicle has been switched off in the following situations:

- if it starts to rain (detection by the rain sensor on the windscreen)
- in the event of extreme outside temperatures
- after six hours
- if there is a malfunction in the power supply

The sliding sunroof then rises at the rear in order to continue ventilating the vehicle interior.

If the sliding sunroof is obstructed during an automatic closing procedure, the roof is opened slightly again. The automatic function for the sliding sunroof and the side windows will then be deactivated.

Rain closing function when driving
Vehicles with a panorama sliding sunroof: if it starts to rain, the raised sliding sunroof will automatically be lowered while the vehicle is in motion.

Automatic lowering function
Vehicles with a panorama sliding sunroof: if the sliding sunroof is raised at the rear, it will automatically be lowered slightly at higher speeds. At low speeds, it will be raised again automatically.

⚠ **WARNING** Risk of entrapment by automatic lowering of the sliding sunroof

At high speeds the raised sliding sunroof automatically lowers slightly at the rear.

This could trap you or other persons.

- Make sure that nobody reaches into the sweep of the sliding sunroof whilst the vehicle is in motion.
- If somebody becomes trapped, briefly push the sliding sunroof button forwards or backwards.
  The sliding sunroof lifts during opening.

Problems with the sliding sunroof

ⓘ The term "sliding sunroof" also refers to the panorama sliding sunroof.

Problem	Possible causes/consequences and ▶ Solutions
The sliding sunroof cannot be closed and you cannot see the cause.	⚠ **WARNING** Risk of becoming trapped or fatal injury by closing the sliding sunroof again If you close the sliding sunroof again immediately after it has been blocked or reset, the sliding sunroof closes with increased force. Parts of the body could become trapped in the closing area in the process. ▶ Make sure that no parts of the body are in the closing area. ▶ Release the button immediately if somebody becomes trapped.

Problem	Possible causes/consequences and ▶ Solutions
	or ▶ Press the button in any direction during the automatic closing process. The closing process is stopped. If the sliding sunroof is obstructed during closing and reopens again slightly: ▶ Immediately after automatic reversing, pull and hold the button down again to the point of resistance until the sliding sunroof is closed. The sliding sunroof will be closed with increased force. If the sliding sunroof is obstructed again and reopens again slightly: ▶ Repeat the previous step. The sliding sunroof will be closed again with increased force.
Vehicles with a panoramic sliding sunroof: the sliding sunroof or the roller sunblind does not operate smoothly.	▶ Pull and hold the button little by little until the sliding sunroof is fully closed. ▶ Pull and hold the button little by little until the roller sunblind is fully closed. ▶ Use automatic operation to fully open and then close the sliding sunroof.

Anti-theft protection

Function of the immobiliser

The immobiliser prevents your vehicle from being started without the correct key.

The immobiliser is automatically activated when the ignition is switched off and deactivated when the ignition is switched on.

ATA (Anti-Theft Alarm system)

Function of the ATA system

If the ATA system is primed, a visual and audible alarm is triggered in the following situations:

- when a door is opened
- when the tailgate is opened
- when the bonnet is opened
- when interior protection is triggered (→ page 100)
- when tow-away protection is triggered (→ page 100)

The ATA system is primed automatically after approximately ten seconds in the following situations:

- after locking the vehicle with the key
- after locking the vehicle using KEYLESS-GO

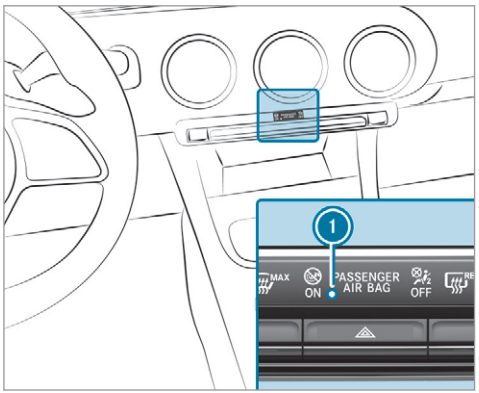

Indicator lamp 1 flashes when the ATA system is primed.

The ATA system is deactivated automatically in the following situations:

- after unlocking the vehicle with the key
- after unlocking the vehicle using KEYLESS-GO
- after pressing the start/stop button with the key in the stowage compartment (→ page 167)

ⓘ When the Mercedes-Benz emergency call system is active and the alarm stays on for more than 30 seconds, a message is automatically sent to the Customer Assistance Centre (→ page 426).

Deactivating the ATA

▶ Press the [ ] or [ ] button on the key.

or

▶ Press the start/stop button with the key in the stowage compartment (→ page 167)

Deactivating the alarm using KEYLESS-GO

▶ Grasp the outside door handle with the key outside the vehicle.

Function of tow-away protection

An audible and visual alarm is triggered if your vehicle's angle of inclination is altered while tow-away protection is primed.

Tow-away protection is automatically primed after approximately 60 seconds:

- after locking the vehicle with the key
- after locking the vehicle using KEYLESS-GO

Tow-away protection is only primed when the following components are closed:

- the doors
- the tailgate

Tow-away protection is automatically deactivated:

- after pressing the button on the key
- after pressing the start/stop button with the key in the stowage compartment (→ page 167)
- after unlocking the vehicle using KEYLESS-GO

Information on detecting damage on a parked vehicle (→ page 199).

Priming/deactivating tow-away protection

Multimedia system:

Settings Quick access

▶ Prime or deactivate Tow-away protection.

Tow-away protection is primed again in the following cases:

- The vehicle is unlocked again.
- A door is opened.
- The vehicle is locked again.

ⓘ If quick access is unavailable, select the Vehicle submenu in the Settings main menu to prime or deactivate tow-away protection.

Function of interior protection

When interior protection is primed, a visual and audible alarm is triggered if movement is detected in the vehicle interior.

Interior protection is primed automatically after approximately ten seconds:

- after locking the vehicle with the key
- after locking the vehicle using KEYLESS-GO

Interior protection is only primed when the following components are closed:

- doors
- the tailgate

Interior protection is automatically deactivated:

- after pressing the button on the key
- after pressing the start/stop button with the key in the stowage compartment (→ page 167)
- after unlocking the vehicle using KEYLESS-GO

The following situations can lead to a false alarm:

- moving objects such as mascots in the vehicle interior
- when the side window is open
- when the panoramic sliding sunroof is open

Priming/deactivating interior protection

Multimedia system:

→ ⌂ ▸▸ Settings ▸▸ Quick access

▶ Prime or deactivate Interior motion sensor.

Interior protection is primed again in the following cases:

- The vehicle is unlocked again.
- A door is opened.
- The vehicle is locked again.

ⓘ If quick access is unavailable, select the Vehicle menu under Settings to prime or deactivate interior protection.

Notes on the correct driver's seat position

⚠ **WARNING** Risk of injury through adjusting vehicle settings while the vehicle is in motion

You could lose control of the vehicle in the following situations:

- if you adjust the driver's seat, the head restraints, the steering wheel or the mirror while the vehicle is in motion
- if you fasten your seat belt while the vehicle is in motion

▶ Before starting the engine: adjust the driver's seat, the head restraints, the steering wheel or the mirror and fasten your seat belt.

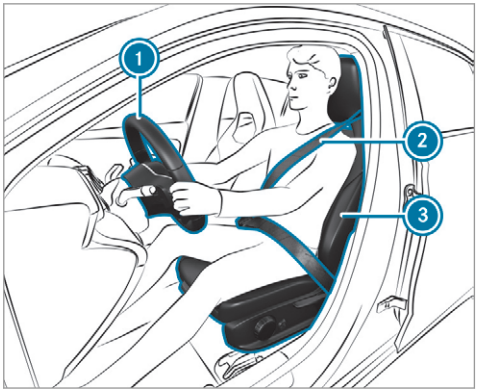

Ensure the following when adjusting the steering wheel ①, seat belt ② and driver's seat ③:

- you are sitting as far away from the driver's airbag as possible, taking the following points into consideration.
- you are sitting in an upright position
- your thighs are slightly supported by the seat cushion
- your legs are not fully extended and you can depress the pedals properly
- the back of your head is supported at eye level by the centre of the head restraint
- you can hold the steering wheel with your arms slightly bent
- you can move your legs freely
- you can see all the displays on the instrument cluster clearly
- you have a good overview of the traffic conditions
- your seat belt sits snugly against your body and passes across the centre of your shoulder and across your hips in the pelvic area

Seats

Adjusting the front seat mechanically (with Seat Comfort Package)

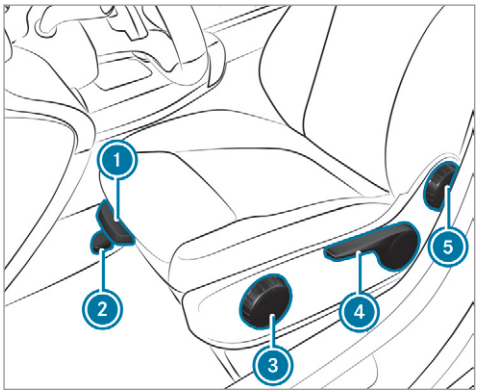

- **To adjust the seat cushion length:** lift lever (1) and slide the front section of the seat cushion forwards or backwards.
- **To adjust the seat fore-and-aft position:** lift lever (2) and slide the seat into the desired position.
- Make sure that the seat is engaged.
- **To adjust the seat cushion inclination:** turn the handwheel (3) forwards and backwards until the desired position has been reached.
- **To adjust the seat height:** push or pull lever (4) until the desired position has been reached.
- **To adjust the seat backrest inclination:** turn handwheel (5) forwards and backwards until the desired position has been reached.

ⓘ You can expand the load compartment by folding the front-passenger seat backrest forwards (→ page 114).

Adjusting the front seat electrically

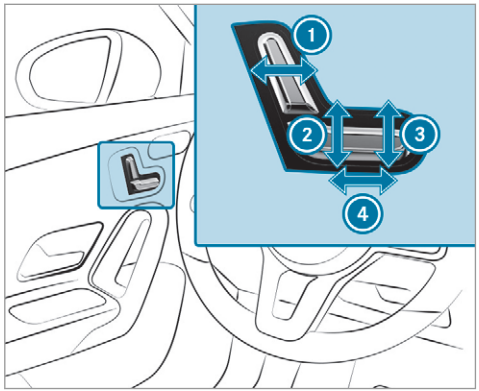

(1) Seat backrest inclination
(2) Seat height
(3) Seat cushion inclination
(4) Seat fore-and-aft position

- Save the settings with the memory function (→ page 110).

Adjusting the 4-way lumbar support

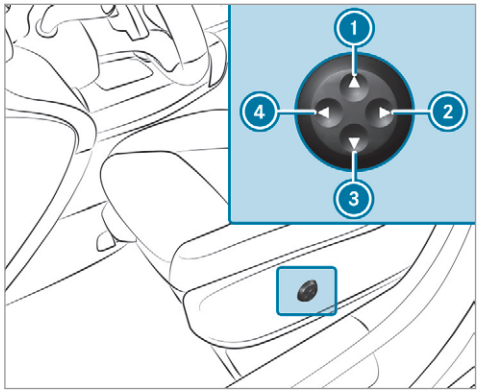

1 Raise
2 Soften
3 Lower
4 Harden

▶ Using buttons 1 to 4, adjust the contour of the backrest individually to suit your back.

Head restraints

Adjusting the front seat head restraints mechanically

⚠ **WARNING** Risk of injury through adjusting vehicle settings while the vehicle is in motion

You could lose control of the vehicle in the following situations:

- if you adjust the driver's seat, the head restraints, the steering wheel or the mirror while the vehicle is in motion
- if you fasten your seat belt while the vehicle is in motion

▶ Before starting the engine: adjust the driver's seat, the head restraints, the steering wheel or the mirror and fasten your seat belt.

⚠ **WARNING** Risk of injury due to head restraints which are not fitted or are adjusted incorrectly

If head restraints are not fitted or are adjusted incorrectly, they cannot provide protection as intended.

There is an increased risk of injury in the head and neck area, e.g. in the event of an accident or when braking.

▶ Always drive with the head restraints fitted.

▶ Before driving off, make sure for every vehicle occupant that the centre of the head restraint supports the back of the head at about eye level.

Do not interchange the head restraints of the front and rear seats. Otherwise, you will not be able to adjust the height and angle of the head restraints correctly.

Adjust the head restraint fore-and-aft position so that it is as close as possible to the back of your head.

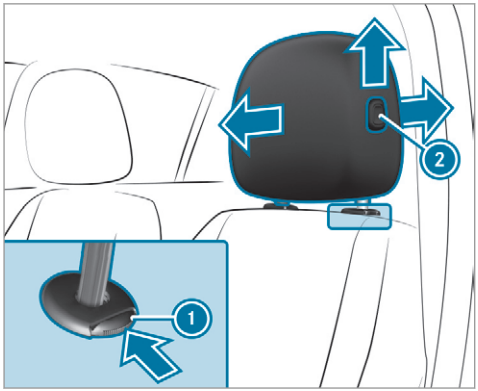

- **To raise:** pull the head restraint up.
- **To lower:** press release knob (1) in the direction of the arrow and push the head restraint down.
- **To move forwards:** press release knob (2) and pull the head restraint forwards.
- **To move backwards:** press release knob (2) and push the head restraint backwards.

Adjusting the head restraints of the rear seats mechanically

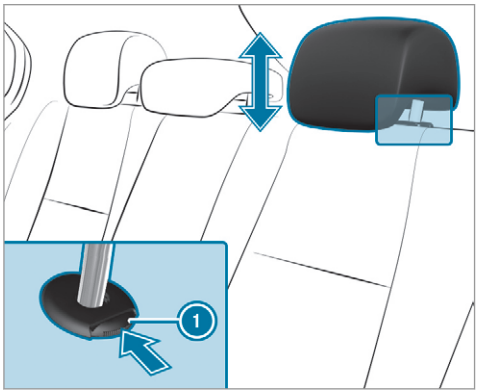

- **To raise:** pull the head restraint up.
- **To lower:** press the release knob (1) in the direction of the arrow and push the head restraint down.

Fitting/removing the rear seat head restraints

Removing

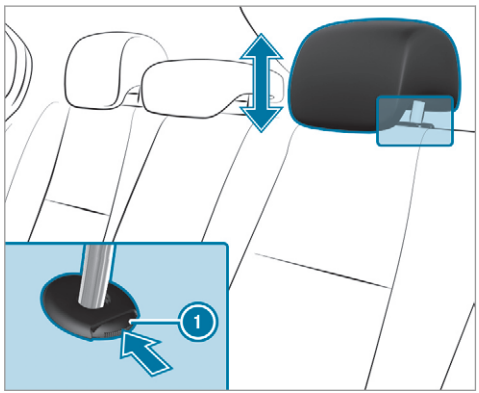

- Release the rear seat backrest and fold it forwards slightly (→ page 114).
- Pull the head restraint upwards as far as it will go.

- Push the release knob (1) in the direction of the arrow and pull out the head restraint.

Fitting

- Insert the head restraint such that the notches on the bar are on the left when viewed in the direction of travel.
- Push the head restraint down until it engages.
- Fold the rear seat backrest back until it engages.

Configuring the seat settings

Multimedia system:

→ ⌂ ▸▸ Comfort ▸▸ Seat comfort

Adjusting the backrest contour in the lumbar region of the seat backrest (lumbar)

- Select Lumbar.
- Select the settings ☼ for the desired seat.
- Adjust the air cushions.

Adjusting the backrest side bolsters

- Select Side bolsters.
- Adjust the air cushion for the desired seat.

Selecting the massage programme for the front seats

Multimedia system:

→ ⌂ ▸▸ Comfort ▸▸ Massage

- Select Wave Massage or Pulsating Massage.
- Start the program for the desired seat ▶.
- **To set the massage intensity: switch** High intensity on or off .

Resetting seat settings

Multimedia system:

→ ⌂ ▸▸ Comfort ▸▸ Seat comfort

- Select Reset.
- Select ↻ for the desired seat.
  The settings for the selected seat are reset.

Switching the seat heating on/off

⚠ **WARNING** Risk of burns due to repeatedly switching on the seat heater

Repeatedly switching on the seat heater can cause the seat cushion and seat backrest padding to become very hot.

The health of persons with limited temperature sensitivity or a limited ability to react to high temperatures may be affected or they may even suffer burn-like injuries.

- Do not repeatedly switch on the seat heater.

To protect against overheating, the seat heating may be temporarily deactivated after it is switched on repeatedly.

! **NOTE** Damage to the seats caused by objects or documents when the seat heater is switched on

When the seat heater is switched on, overheating may occur due to objects or docu-

ments placed on the seats e.g. seat cushions or child seats. This could cause damage to the seat surface.

▶ Make sure that no objects or documents are on the seats when the seat heater is switched on.

Requirements:

- The power supply is switched on.

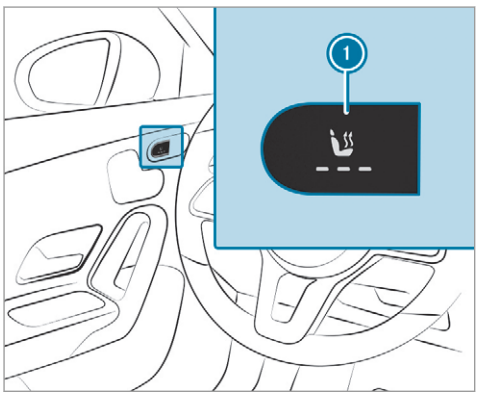

▶ **To switch on / increase the level:** press button 1 repeatedly until the desired heating level is set.
Depending on the heating level, up to three indicator lamps will light up.

▶ **To switch off / reduce the level:** press button 1 repeatedly until the desired heating level is set.
If all indicator lamps are off, the seat heating is switched off.

ⓘ The seat heating will automatically switch down from the three heating levels after 8, 10 and 20 minutes until the seat heating switches off.

Switching the seat ventilation on/off

Requirements:

- The power supply is switched on.

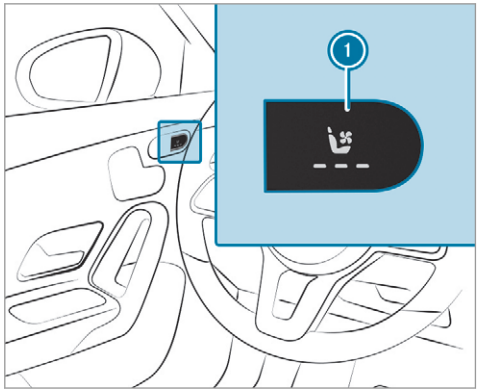

▶ **To switch on / increase the level:** press button 1 repeatedly until the desired ventilation level is set.
Depending on the ventilation level, up to three indicator lamps will light up.

- **To switch off / reduce the level:** press button (1) repeatedly until the desired ventilation level is set.
  If all indicator lamps are off, the seat ventilation is switched off.

Steering wheel

Adjusting the steering wheel mechanically

WARNING Risk of injury through adjusting vehicle settings while the vehicle is in motion

You could lose control of the vehicle in the following situations:

- if you adjust the driver's seat, the head restraints, the steering wheel or the mirror while the vehicle is in motion
- if you fasten your seat belt while the vehicle is in motion

- Before starting the engine: adjust the driver's seat, the head restraints, the steering wheel or the mirror and fasten your seat belt.

WARNING Risk of entrapment for children when adjusting the steering wheel

Children could injure themselves if they adjust the steering wheel.

- Never leave children unattended in the vehicle.
- When leaving the vehicle, always take the key with you and lock the vehicle. This also applies to the digital vehicle key if the "Digital Vehicle Key" function is activated via Mercedes me connect.

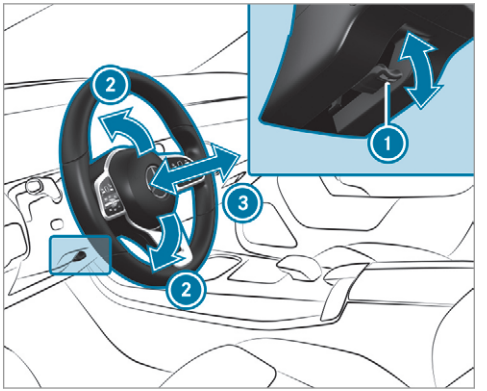

- Push release lever (1) down as far as it will go.
  The steering column is unlocked.
- Adjust height (2) and distance (3) to the steering wheel.
- Push release lever (1) up as far as it will go.
  The steering column is locked.
- Check and make sure that the steering column is locked by moving the steering wheel.

Switching the steering wheel heater on/off

Requirements:

- The ignition is switched on.

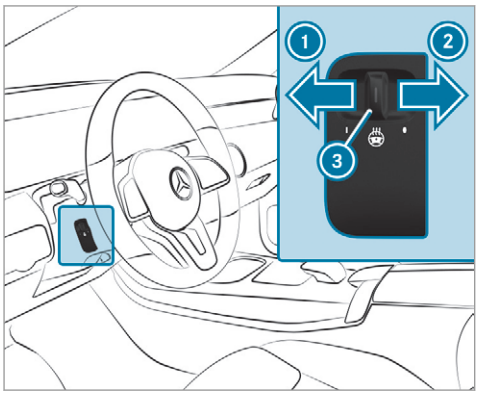

▶ Push the switch into position 1 or 2. If the indicator lamp 3 lights up, the steering wheel heater is switched on.

When you switch the ignition off, the steering wheel heater will switch off.

Easy entry and exit feature

Using the easy entry and exit feature

⚠ **WARNING** Risk of accident when pulling away during the adjustment process of the easy exit feature

- If you pull away while the easy entry and exit feature is making adjustments, you could lose control of the vehicle.

▶ Always wait until the adjustment process is complete before pulling away.

⚠ **WARNING** Risk of becoming trapped while adjusting the easy entry and exit feature

When the easy entry and exit feature adjusts the driver's seat, you and other vehicle occupants – particularly children – could become trapped.

▶ During the adjustment process of the easy entry and exit feature, make sure that no one has any body parts in the sweep of the driver's seat.

If there is a risk of becoming trapped by the driver's seat:

▶ Press the seat adjustment switch. The adjustment process is stopped.

▶ Never leave children unattended in the vehicle.

▶ When leaving the vehicle, always take the key with you and lock the vehicle. This also applies to the Digital Vehicle Key if the "Digital Vehicle Key" function is activated via Mercedes me connect.

You can stop the adjustment process by pressing one of the memory function position switches.

WARNING Risk of becoming trapped during activation of the easy entry and exit feature by children

If children activate the easy entry and exit feature, they can become trapped, particularly when unattended.

- Never leave children unattended in the vehicle.
- When leaving the vehicle, always take the key with you and lock the vehicle.

This also applies to the Digital Vehicle Key if the "Digital Vehicle Key" function is activated via Mercedes me connect.

When the easy entry and exit feature is active, the driver's seat will move backwards and the backrest will be moved to a steeper position when:

- you switch the ignition off with the driver's door open
- you open the driver's door with the ignition switched off

The driver's seat will move backwards only if it is not already in the rearmost position. The seat backrest will move forwards only if it is not already in the frontmost position.

The driver's seat will move back to the last drive position when:

- you switch the ignition on with the driver's door closed
- you close the driver's door with the ignition switched on

The last drive position will be stored when:

- you switch the ignition off
- you call up the seat settings via the memory function
- you save the seat setting using the memory function

Setting the easy entry and exit feature

Multimedia system:

Settings » Vehicle » AUTO. SEAT ADJUSTMENT » Easy Entry/Exit

- Activate or deactivate the function.

Operating the memory function

WARNING Risk of an accident if the memory function is used while driving

If you use the memory function on the driver's side while driving, you could lose control of the vehicle as a result of the adjustments being made.

- Only use the memory function on the driver's side when the vehicle is stationary.

⚠ WARNING Risk of entrapment when setting the seat with the memory function

When the memory function adjusts the seat, you and other vehicle occupants – particularly children – could become trapped.

- ▶ During the adjustment process of the memory function, make sure that no one has any body parts in the sweep of the seat.
- ▶ If someone becomes trapped, press a preset position button or seat adjustment switch immediately.

⚠ WARNING Risk of entrapment if the memory function is activated by children

Children could become trapped if they activate the memory function, particularly when unattended.

- ▶ Never leave children unattended in the vehicle.
- ▶ When leaving the vehicle, always take the key with you and lock the vehicle.

This also applies to the Digital Vehicle Key if the "Digital Vehicle Key" function is activated via Mercedes me connect.

The memory function can be used when the ignition is switched off.

Storing

Seat adjustments for up to three people can be stored and called up using the memory function.

The following systems can be selected:

- Seat
- Seat contour
- Outside mirrors
- Head-up display

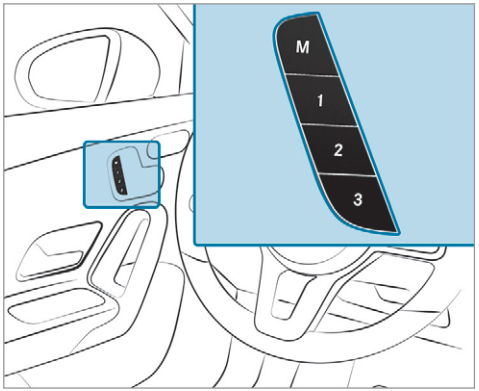

- ▶ Set the seat, the seat contour, the head-up display and the outside mirrors to the desired position.
- ▶ Press memory button M and then press preset position button 1, 2 or 3 within three seconds.

- **To call up:** press and briefly hold memory position switch 1, 2 or 3.
  After releasing the button, the front seat, head-up display, outside mirrors and seat contour are moved into the stored position automatically.

Stowage areas

Notes on loading the vehicle

⚠ DANGER Risk of exhaust gas poisoning

Combustion engines emit poisonous exhaust gases such as carbon monoxide. Exhaust gases can enter the vehicle interior if the tailgate is open when the engine is running, especially if the vehicle is in motion.

- Always switch off the engine before opening the tailgate.
- Never drive with the tailgate open.

⚠ WARNING Risk of injury from unsecured items in the vehicle

If objects, luggage or loads are not secured or not secured sufficiently, they could slip, tip over or be thrown around and thereby hit vehicle occupants.

There is a risk of injury, particularly in the event of sudden braking or a sudden change in direction.

- Always stow objects in such a way that they cannot be thrown around.
- Before the journey, secure objects, luggage or loads against slipping or tipping over.

⚠ WARNING Risk of injury from inadequate stowage of objects

If you do not adequately stow objects in the vehicle interior, they could slip or be tossed around and thereby strike vehicle occupants. In addition, cup holders, open stowage spaces and mobile phone brackets cannot always restrain the objects they contain in the event of an accident.

There is a risk of injury, particularly in the event of sudden braking or a sudden change in direction.

- Always stow objects in such a way that they cannot be tossed around in these or similar situations.
- Always make sure that objects do not project from stowage spaces, luggage nets or stowage nets.
- Close all sealable stowage spaces before you start your journey.
- Stow and secure objects that are heavy, hard, pointed, sharp-edged, fragile or too large in the load compartment.

⚠ WARNING Risk of burns from the tailpipe and tailpipe trims

The exhaust tailpipe and tailpipe trims can become very hot. If you come into contact with these parts of the vehicle, you could burn yourself.

- ▶ Always be particularly careful around the tailpipe and the tailpipe trims and supervise children especially closely in this area.
- ▶ Allow vehicle parts to cool down before touching them.

The driving characteristics of your vehicle are dependent on the distribution of the load within the vehicle. You should bear the following in mind when loading the vehicle:

- never exceed the permissible gross mass or the permissible axle loads for the vehicle (including occupants).

  Information can be found on the vehicle identification plate (→ page 521).
- the load must not protrude above the upper edge of the seat backrests.
- always use the partition net when transporting objects in the load compartment.
- always place the load behind unoccupied seats if possible.
- secure the load using the tie-down eyes and distribute the load evenly.

Stowage spaces in the vehicle interior

Overview of the front stowage compartments

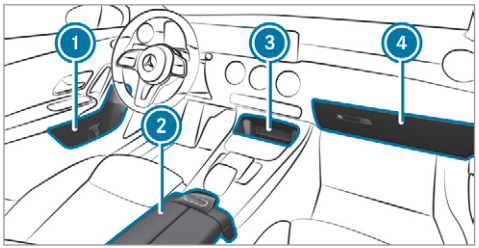

1. Stowage space in the doors
2. Stowage compartment in the armrest with a multimedia and USB connection
3. Stowage compartment in the front centre console with a USB connection and charging module for wireless charging of a mobile phone (not available in all countries)
4. Glove compartment

Opening the stowage compartment for customer documents in the glove compartment

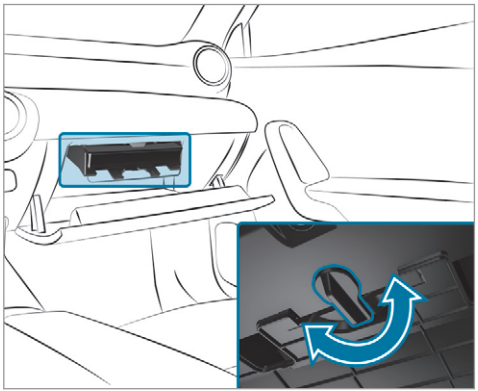

▶ **To open:** turn the handle to the left or right.

Expanding the load compartment by folding the front-passenger seat backrest forwards

WARNING Risk of becoming trapped when adjusting the seats

When you adjust a seat, you or other vehicle occupants could become trapped, e.g. on the seat guide rail.

- When adjusting a seat, make sure that no one has any body parts in the sweep of the seat.

Observe the safety notes on "Airbags" and "Children in the vehicle".

WARNING Risk of injury due to seat backrest folded forwards

If the front-passenger seat backrest is folded forwards, persons in the rear compartment could collide with parts of the seat adjustment mechanism, particularly in the event of an accident, sudden braking or an abrupt change of direction.

- If there is a passenger in the vehicle and the front-passenger seat backrest is folded forwards, the passenger must sit on the rear seat behind the driver.

The backrest of the front-passenger seat can be folded forwards to increase the luggage compartment capacity.

Requirements:

- The rear seat behind the front-passenger seat backrest that is folded forwards and the rear centre seat are unoccupied.

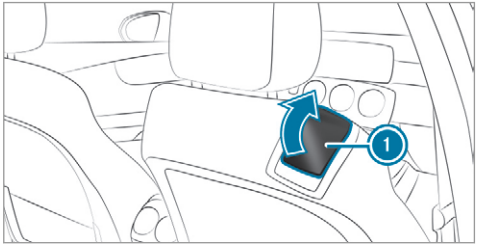

- **Folding forwards:** pull the release handle 1 and fold the seat backrest fully forwards onto the sitting surface until it engages.
- **Folding back:** pull the release handle 1 and pivot the seat backrest backwards until it engages.

Through-loading feature in the rear bench seat

Folding the rear seat backrest forwards

WARNING Risk of injury if the rear bench seat/rear seat and seat backrest are not engaged

If the rear bench seat/rear seat and seat backrest are not engaged they could fold forwards, e.g. when braking suddenly or in the event of an accident.

- If this is the case, the vehicle occupant would be forced into the seat belt by the rear bench seat/rear seat or by the seat backrest. The seat belt cannot protect as

intended and could result in additional injury.

- Objects or loads in the boot/load compartment cannot be restrained by the seat backrest.

▶ Make sure that the seat backrest and the rear bench seat/rear seat are engaged before every trip.

If the seat backrests are not engaged and locked in place, the lock verification indicator will be red.

Requirements:

- To fold forward the middle seat backrest: the middle seat backrest has been unlocked.

The centre and outer seat backrests can be folded forwards.

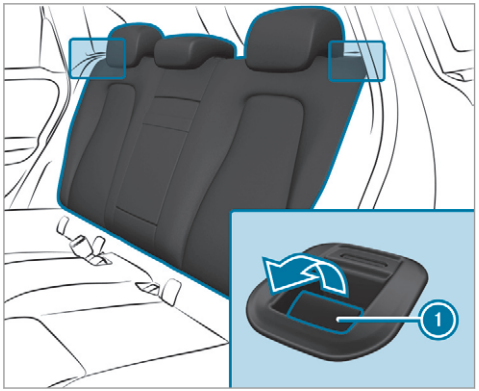

▶ **Left and right seat backrests:** if necessary, fully insert the seat backrest head restraints (→ page 105).

▶ Pull the release lever 1.

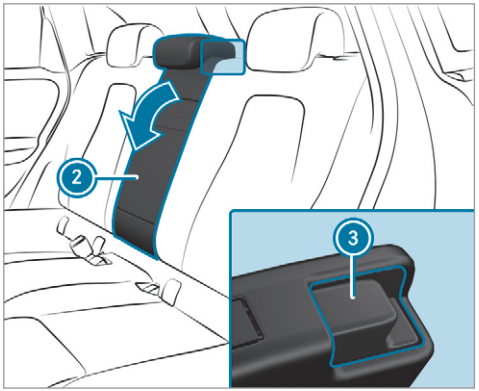

▶ **Centre seat backrest:** pull release catch 3 of seat backrest 2 forwards.

▶ Fold the corresponding seat backrest forwards.

Folding back the rear seat backrest

NOTE Damage caused by trapping the seat belt when folding back the seat backrest

The seat belt could become trapped and thus be damaged when the seat backrest is folded back.

- Make sure that the seat belt is not trapped when folding back the seat backrest.

- Move the driver's or front passenger seat forwards, if necessary.

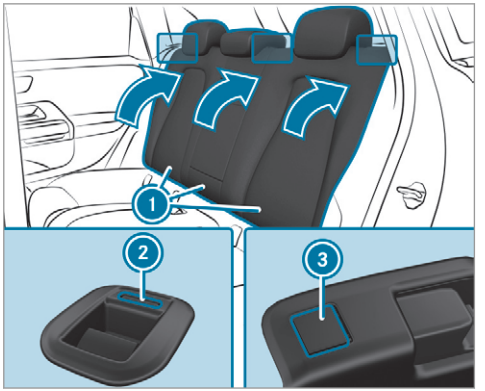

- Fold the corresponding seat backrest (1) back until it engages.
  Left and right seat backrest: if the seat backrest is not engaged and locked, the red lock verification indicator (2) will be visible.
  Centre seat backrest: if the seat backrest is not engaged and locked, the red lock verification indicator (3) will be visible.

Locking the release catch of the centre rear seat backrest

Requirements:

- The left and centre seat backrests are engaged and joined together.

You can lock the centre seat backrest. The centre seat backrest can then be folded forwards only together with the left seat backrest.

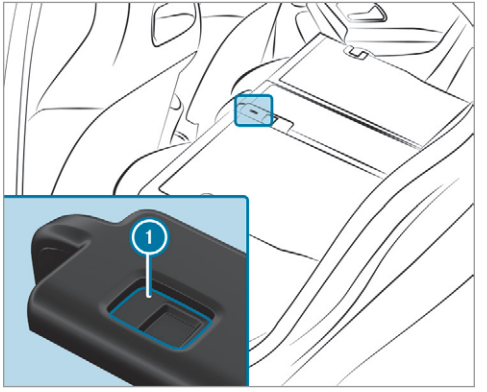

- Fold the centre and left seat backrests forwards.
- **To lock:** slide the catch (1) upwards. The release catch of the centre seat backrest will be locked.
- **To unlock:** slide the catch (1) downwards.

Adjusting the angle of the rear seat backrests (cargo position)

To enlarge the load compartment, you can adjust the seat backrests so that they are ten degrees steeper (cargo position).

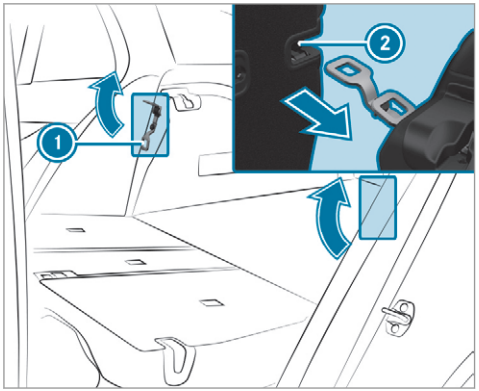

- Fold the seat backrest forwards (→ page 114).
- Move bracket (1) in the direction of the arrow.
- Push seat backrest (2) back to bracket (1) until the backrest engages.

Load compartment cover

Fitting and removing the load compartment cover

WARNING Risk of injury or death due to objects being poorly secured

On its own, the load compartment cover cannot secure or restrain heavy objects, items of luggage and heavy loads.

You could be hit by an unsecured load during sudden changes in direction, braking or in the event of an accident.

- Always stow objects in such a way that they cannot be thrown around.
- Secure objects, luggage or loads against slipping or tipping over, e.g. by using lashing material, even if you are using the load compartment cover.

Do not load the load compartment cover with more than 2.5 kg.

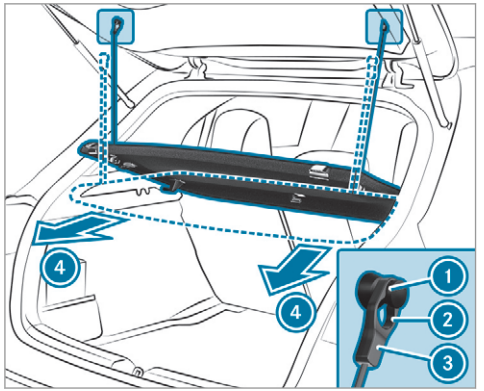

- **To remove:** pull hanger (3) on the tailgate upwards out of eyelet (1) and unhook it.
- Swivel the load compartment cover downwards and pull it out in the direction of arrow (4).
- **To install:** place the load compartment cover onto the guide rails on the left and right.
- Push the load compartment cover forwards evenly with both hands until it engages.
- Swivel the load compartment cover upwards and hook hanger (3) through eyelet (2).
- Then pull hanger (3) downwards into eyelet (1) until it engages.

Attaching/removing the partitioning net

WARNING Risk of injury or death due to objects being poorly secured

On its own, the partition net cannot secure or restrain heavy objects, items of luggage and heavy loads.

You could be hit by an unsecured load during sudden changes in direction, braking or in the event of an accident.

- Always stow objects in such a way that they cannot be thrown around.
- Secure objects, luggage or loads against slipping or tipping over, e.g. by using lashing material, even when you are using the partition net.

For safety reasons, always use a partitioning net when transporting a load.

Damaged partitioning nets can no longer fulfil their functions and must be replaced. Visit a qualified specialist workshop.

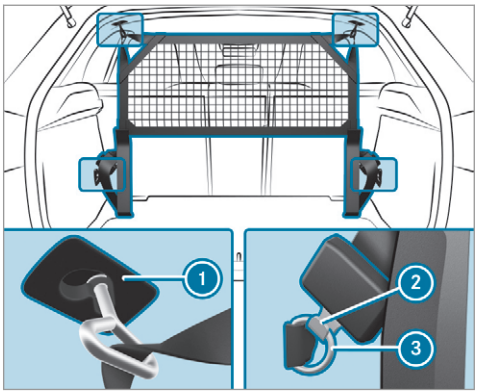

Partitioning net without load compartment enlargement

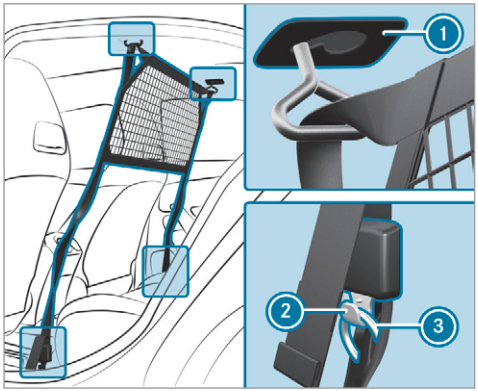

Partitioning net with load compartment enlargement

- **To attach:** Attach the partition net to the brackets (1) on the left and right of the roof lining.
- Without load compartment enlargement: attach the hooks (2) to the tie-down eyes (3) on the left and right in such a way that the hooks (2) point backwards.
- With load compartment enlargement: attach the hooks (2) to the tie-down eyes (3) on the left and right in such a way that the hooks (2) point to the door.
- Pull on the loose ends of the lashing straps until the partitioning net is tight.

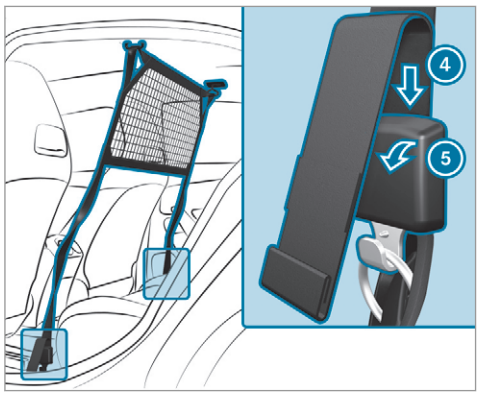

- **To remove:** turn the buckle of the tie-down strap in the direction of arrow (5).
- Slide the loose end of the tie-down strap into the buckle in the direction of arrow (4) until the tie-down straps are loose.
- Remove the hooks (2) from the tie-down eyes (3) on the left and right.
- Remove the partition net from the holders (1) on the roof lining on the left and right.

Overview of the tie-down eyes

Observe the notes on loading the vehicle (→ page 112).

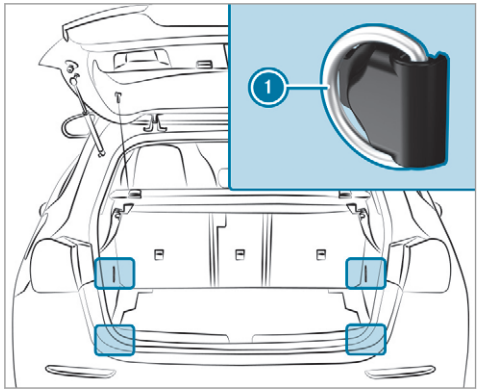

1 Tie-down eyes (vehicles with through-loading feature in the rear bench seat)

Overview of bag hooks

WARNING Risk of injury when using bag hooks with heavy objects

The bag hooks cannot restrain heavy objects or items of luggage.

Objects or items of luggage could be thrown around and thereby hit vehicle occupants when braking or abruptly changing directions.

- Only hang light objects on the bag hooks.
- Never hang hard, sharp-edged or fragile objects on the bag hooks.

Observe the notes on loading the vehicle (→ page 112).

The bag hooks can bear a maximum load of 3 kg. Do not use them to secure a load.

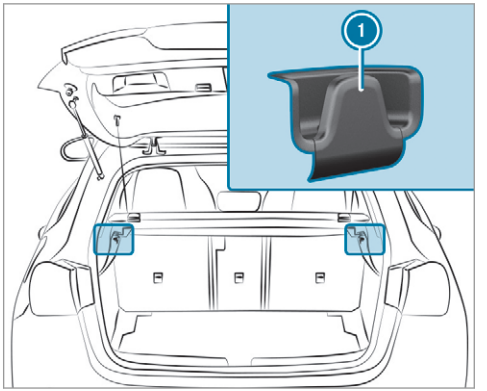

1 Bag hook

Overview of coat hooks on the tailgate

Observe the notes on loading the vehicle (→ page 112).

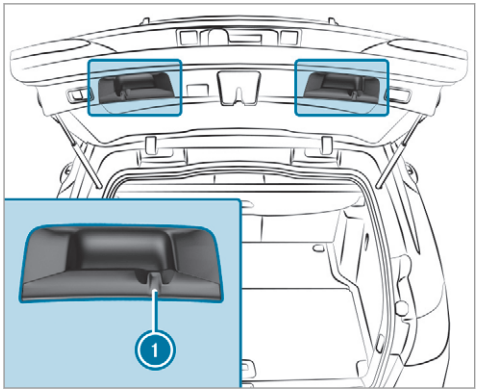

① Coat hook

Coat hooks are not suitable for hanging heavy objects as this can cause the tailgate to lower automatically. Use the coat hooks only for light objects such as jackets.

Opening or closing the stowage space under the load compartment floor

⚠ **WARNING** Risk of injury due to an open load compartment floor

If you drive when the load compartment floor is open, objects could be thrown around and thereby strike vehicle occupants. There is a risk of injury, particularly in the event of sudden braking or a sudden change in direction.

- Always close the load compartment floor before a journey.

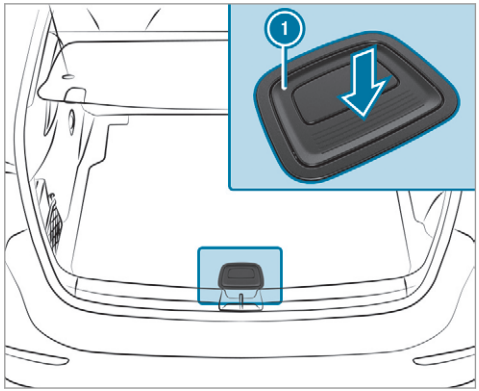

- **To open:** pull handle ① upwards.
- Lift the load compartment floor upwards using handle ①.
- **To close:** fold the load compartment floor downwards and then press handle ① down until it engages.

Attaching a roof rack

WARNING Risk of injury if the maximum roof load is exceeded

When you load the roof, the centre of gravity of the vehicle rises and the usual driving characteristics as well as the steering and braking characteristics change. During cornering, the vehicle tilts more strongly and may react more sluggishly to steering movements.

If you exceed the maximum roof load, the driving characteristics, as well as the steering and braking characteristics, will be greatly impaired.

- Always comply with the maximum roof load and adjust your driving style.

You will find information on the maximum roof load in the "Technical data" section.

NOTE Vehicle damage from non-approved roof racks

The vehicle could be damaged by roof racks which have not been tested and approved by Mercedes-Benz.

- Use only roof racks tested and approved for Mercedes-Benz.
- Depending on the vehicle equipment, ensure that when the roof rack is fitted, the sliding sunroof can be fully raised.
- Depending on the vehicle equipment, ensure that when the roof rack is fitted, the tailgate can be fully opened.
- Position the load on the roof rack in such a way that the vehicle will not sustain damage even when it is in motion.

NOTE Damage to the panorama sliding sunroof caused by a non-approved roof rack

The panorama sliding sunroof may be damaged by the roof rack if you attempt to open it when using a roof rack not tested and approved for Mercedes-Benz.

- When a roof rack is fitted, open the panorama sliding sunroof only if this has been tested and approved for Mercedes-Benz.

The panorama sliding sunroof may be raised to allow ventilation of the vehicle interior.

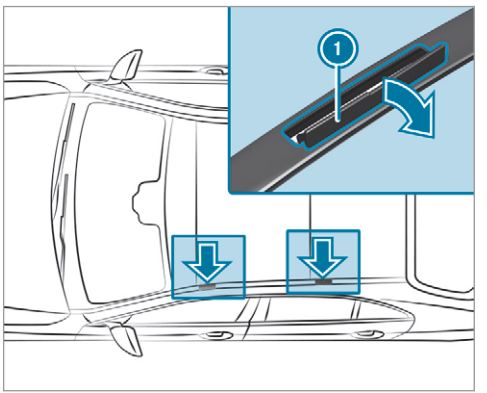

NOTE Damage to the covers

The covers may be damaged and scratched when being opened.

- Do not use metallic or hard objects.

- Carefully fold the covers (1) upwards in the direction of the arrow.
- Secure the roof rack to the anchorage points under the covers (1).
- Comply with the roof rack manufacturer's installation instructions.
- Secure the load on the roof rack.

Cup holders

Installing the cup holder in or removing it from the centre console (automatic transmission)

WARNING - Risk of accident or injury when using the cup holder while the vehicle is in motion

The cup holder cannot hold a container secure while the vehicle is in motion.

If you use a cup holder while the vehicle is in motion, the container may be flung around and liquids could be spilled. The vehicle occupants may come into contact with the liquid and if it is hot, they could be scalded. You could be distracted from traffic conditions and you may lose control of the vehicle.

- Only use the cup holder when the vehicle is stationary.
- Only use the cup holder for containers of the right size.
- Always close the container, particularly if the liquid is hot.

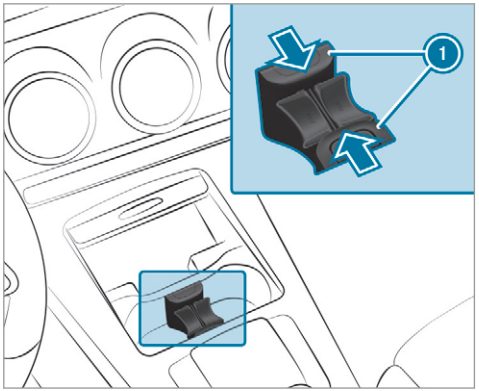

Cup holder in the stowage compartment with cover

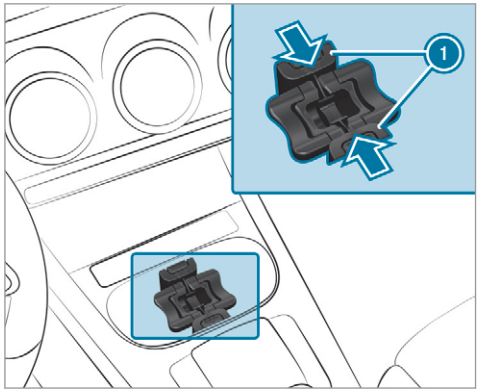

Cup holder in the stowage compartment without cover

- **To remove:** slide snap-in brackets (1) of the cup holder inwards until they are unlocked.
- Move the cup holder upwards out of the stowage compartment.

ⓘ The cup holder and the rubber mat beneath it can be removed for cleaning, e.g. with clean, lukewarm water.

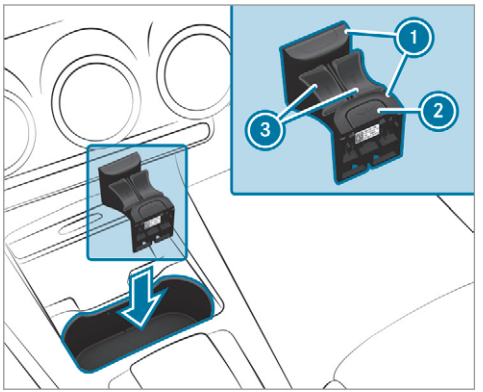

Cup holder in the stowage compartment with cover

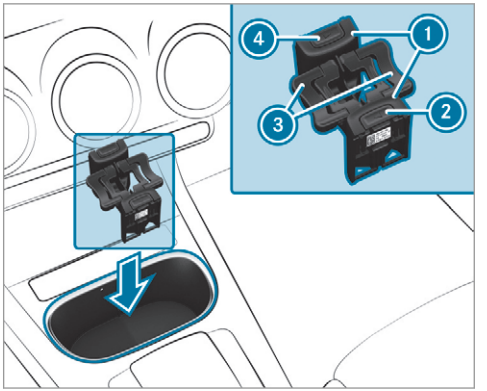

Cup holder in the stowage compartment without cover

- **To fit:** if necessary, open the stowage compartment cover and insert the cup holder, as shown, into the stowage compartment with the imprint facing the vehicle interior.
- Slide the cup holder onto the bars in the stowage compartment.

- Slide snap-in brackets (1) outwards until they engage.
- **Cup holder in the stowage compartment with cover:** press button (2).

or

- **Cup holder in the stowage compartment without cover:** press button (2) and/or (4). The wings (3) will fold upwards.

ⓘ The cup holder wings can be folded downwards and locked. The cup holder's holding function will then not be available.

Fitting the cup holder in and removing it from the centre console (manual transmission)

⚠ **WARNING** - Risk of accident or injury when using the cup holder while the vehicle is in motion

The cup holder cannot hold a container secure while the vehicle is in motion.

If you use a cup holder while the vehicle is in motion, the container may be flung around and liquids could be spilled. The vehicle occupants may come into contact with the liquid and if it is hot, they could be scalded. You could be distracted from traffic conditions and you may lose control of the vehicle.

- Only use the cup holder when the vehicle is stationary.
- Only use the cup holder for containers of the right size.
- Always close the container, particularly if the liquid is hot.

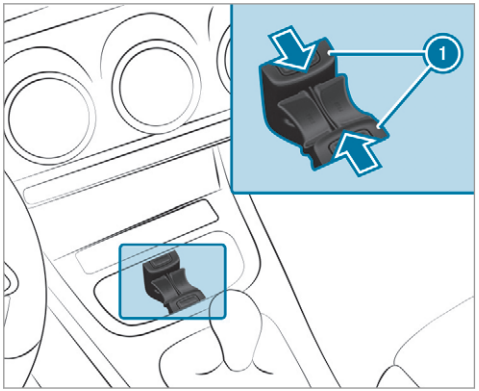

- **To remove:** slide snap-in brackets (1) of the cup holder inwards until they are unlocked.
- Move the cup holder upwards out of the stowage compartment.

ⓘ The cup holder and the rubber mat beneath it can be removed for cleaning, e.g. with clean, lukewarm water.

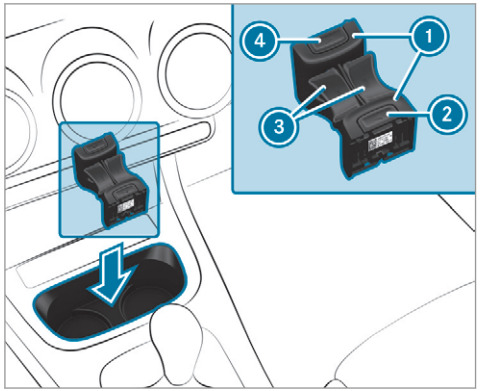

- **To fit:** insert the cup holder, as shown, into the stowage compartment with the imprint facing the vehicle interior.
- Slide the cup holder onto the bars in the stowage compartment.
- Slide snap-in brackets (1) outwards until they engage.
- Press button (2) and/or (4).
  The wings (3) will fold upwards.

ⓘ The cup holder wings can be folded downwards and locked. The cup holder's holding function will then not be available.

Opening or closing the cup holders in the rear armrest

! NOTE Damage to the rear armrest due to body weight

When folded out, the rear armrest can be damaged by body weight.

- Do not sit or support yourself on the rear seat armrest.

! NOTE Damage to the cup holder

When the rear armrest is folded back the cup holder could become damaged.

- Only fold the rear armrest back when the cup holder is closed.

ⓘ Depending on its equipment, your vehicle will have a rear armrest with a cup holder.

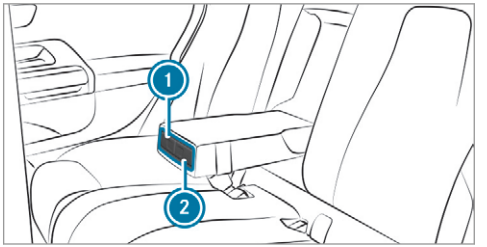

- **To open:** press cup holder (1) or (2).
  Cup holder (1) or (2) will extend automatically.
- **To close:** push cup holder (1) or (2) back until it engages.

Ashtray and cigarette lighter

Using the ashtray

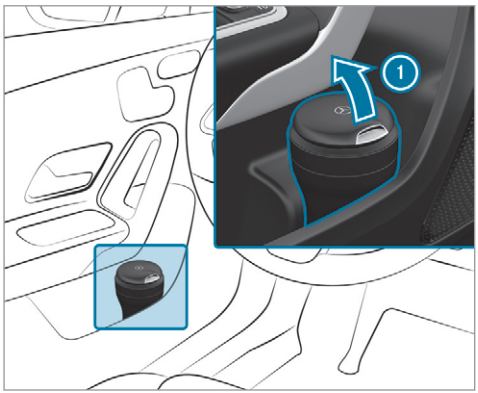

- **While driving:** place the closed ashtray in the front door stowage compartment while driving.
- Check that it is secure.
- Comply with the notes on loading the vehicle (→ page 112).
- **To open:** fold lid (1) upwards.

ⓘ Twist the top part of the ashtray to remove it for cleaning, e.g. with clean, lukewarm water, or for emptying.

Using the cigarette lighter in the front centre console

⚠ **WARNING** - Risk of fire and injury from the hot cigarette lighter

You can burn yourself if you touch the hot heating element or the socket of the cigarette lighter.

In addition, flammable materials may ignite if:

- you drop the hot cigarette lighter
- a child holds the hot cigarette lighter to objects, for example

- Always hold the cigarette lighter by the knob.
- Always make sure that the cigarette lighter is out of reach of children.
- Never leave children unattended in the vehicle.

Requirements:

- The ignition is switched on.

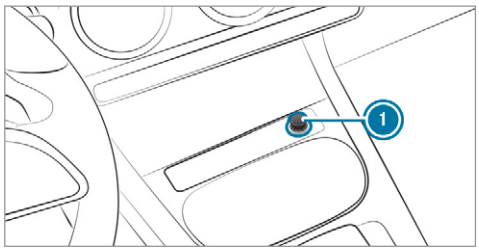

- Press in cigarette lighter (1).

The cigarette lighter will pop out automatically when the heating element is red-hot.

Sockets

Using the 12 V socket in the front centre console

Requirements:

- Only devices up to a maximum of 180 W (15 A) are permissible.

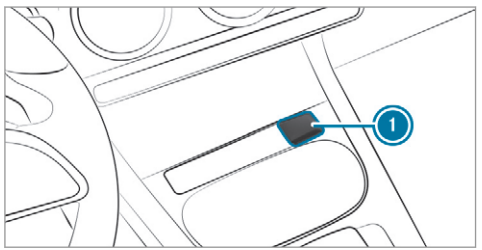

- ▶ Lift up socket cap (1).
- ▶ Insert the plug of the device.

12 V socket in the stowage compartment with cover: if you have connected a device to the 12 V socket, leave the cover of the stowage compartment open.

Using the 115 V socket in the rear

⚠ DANGER Risk of fatal injury due to damaged connecting cables or sockets

If a suitable device is connected, the 115 V socket will be carrying a high voltage. If the connecting cable or the 115 V socket is pulled out of the trim or is damaged or wet, you could receive an electric shock.

- ▶ Use only connecting cables that are dry and free of damage.
- ▶ When the ignition is switched off, ensure that the 115 V socket is dry.
- ▶ If the 115 V socket is damaged or gets pulled out of the trim, immediately have the socket checked or replaced at a qualified specialised workshop.
- ▶ Never plug the connecting cable into a 115 V socket that is damaged or has been pulled out of the trim.

⚠ DANGER Risk of fatal injury due to incorrect handling of the socket

You could receive an electric shock:

- if you reach into the socket.
- if you insert unsuitable devices or objects into the socket.

- ▶ Do not reach into the socket.
- ▶ Only connect suitable devices to the socket.

Requirements:

- Devices are equipped with a suitable plug which conforms to the standards specific to the country you are in.
- A device up to a maximum of 150 W is used.
- Do not use multiple socket outlets.

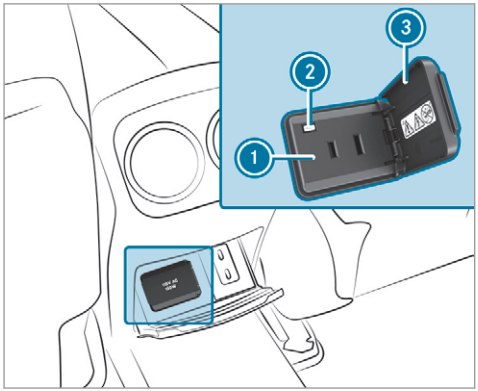

- Open flap (3).
- Insert the plug of the device into 115 V socket (1).
  When the on-board electrical system voltage is sufficient, indicator lamp (2) lights up.

Using the 230 V socket in the rear passenger compartment

⚠ **DANGER** Risk of fatal injury due to damaged connecting cables or sockets

When a suitable device is connected, the 230 V power socket will be carrying a high voltage. You could receive an electric shock if the connecting cable or the 230 V power socket is pulled out of the trim or is damaged or wet.

- Use only connecting cables that are dry and free of damage.
- When the ignition is switched off, make sure that the 230 V power socket is dry.
- Immediately have the 230 V power socket checked or replaced at a qualified specialised workshop if it is damaged or has been pulled out of the trim.
- Never plug the connecting cable into a 230 V power socket that is damaged or has been pulled out of the trim.

⚠ **DANGER** Risk of fatal injury due to incorrect handling of the socket

You could receive an electric shock:

- if you reach into the socket.
- if you insert unsuitable devices or objects into the socket.

- Do not reach into the socket.
- Only connect suitable devices to the socket.

Requirements:

- Devices are equipped with a suitable plug which conforms to the standards specific to the country you are in.
- A device up to a maximum of 150 W (0.65 A) is used.
- Do not use multiple socket outlets.

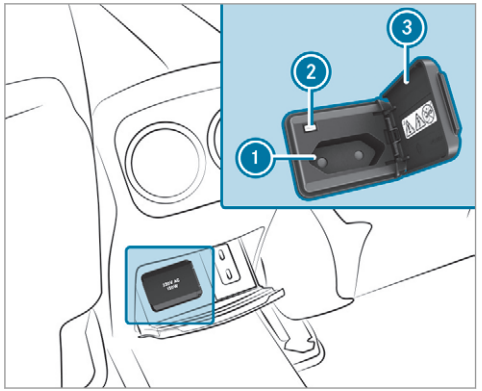

- Open flap (3).
- Insert the plug of the device into 230 V socket (1).
  When the on-board electrical system voltage is sufficient, indicator lamp (2) lights up.

Using the 12 V socket in the load compartment

Requirements:

- Only connect devices up to a maximum of 180 W (15 A).

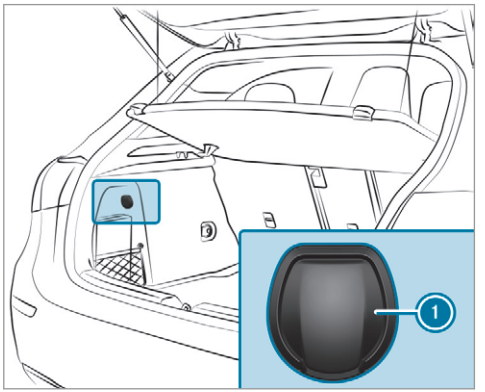

- Lift up cap (1) of the socket and insert the plug of the device.

USB port in the rear

ⓘ Depending on the vehicle equipment, the design of the stowage compartment and the number of USB ports in the rear centre console may vary.

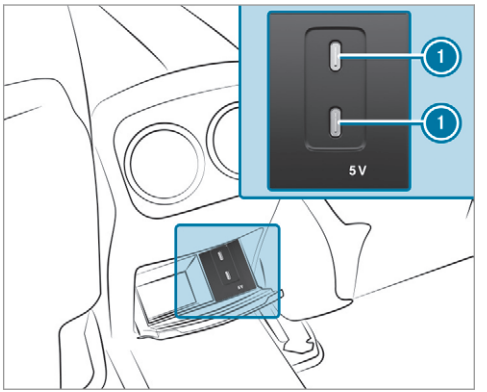

If the ignition is switched on you can charge a USB device, e.g. a mobile phone, at USB ports (1) using a suitable charging cable.

Wireless charging of the mobile phone and connection with the exterior aerial

Notes on wirelessly charging the mobile phone

⚠ WARNING Risk of injury due to objects being stowed incorrectly

If objects in the vehicle interior are stowed incorrectly, they can slide or be thrown around and hit vehicle occupants. In addition, cup holders, open stowage spaces and mobile phone receptacles cannot always retain all objects they contain.

There is a risk of injury, particularly in the event of sudden braking or a sudden change in direction.

- ▶ Always stow objects so that they cannot be thrown around in such situations.
- ▶ Always make sure that objects do not protrude from stowage spaces, luggage nets or stowage nets.
- ▶ Close the lockable stowage spaces before starting a journey.
- ▶ Always stow and secure heavy, hard, pointed, sharp-edged, fragile or bulky objects in the boot/load compartment.

Observe the notes on loading the vehicle.

⚠ WARNING Risk of fire from placing objects in the mobile phone stowage compartment

There is a risk of fire, in particular, if you place more than one mobile phone in the mobile phone stowage compartment.

- ▶ Apart from a mobile phone, do not place any other objects in the mobile phone stowage compartment, especially those made of metal.

! NOTE Damage to objects caused by placing them in the mobile phone stowage compartment

If objects are placed in the mobile phone stowage compartment, they may be damaged by electromagnetic fields.

- ▶ Do not place credit cards, storage media or other objects sensitive to electromagnetic fields in the mobile phone stowage compartment.

! NOTE Damage to the mobile phone stowage compartment caused by liquids

If liquids enter the mobile phone stowage compartment, the compartment may be damaged.

- ▶ Ensure that no liquids enter the mobile phone stowage compartment.

- Depending on the vehicle equipment, the mobile phone is connected to the vehicle's exterior aerial via the charging module.

- The charging function and wireless connection of the mobile phone to the vehicle's exterior aerial are only available if the ignition is switched on.
- Small mobile phones may not be able to be charged in every position of the mobile phone stowage compartment.
- Large mobile phones which do not rest flat in the mobile phone stowage compartment may not be able to be charged or connected with the vehicle's exterior aerial.
- The mobile phone may heat up during the charging process. This may particularly depend on the applications (apps) currently open in the background.
- To ensure more efficient charging and connection with the vehicle's exterior aerial, remove the protective cover from the mobile phone. Protective covers which are necessary for wireless charging are excluded.

Wirelessly charging a mobile phone

Requirements:

- The mobile phone is suitable for wireless charging. You can find a list of compatible mobile phones at:

  https://www.mercedes-benz-mobile.com

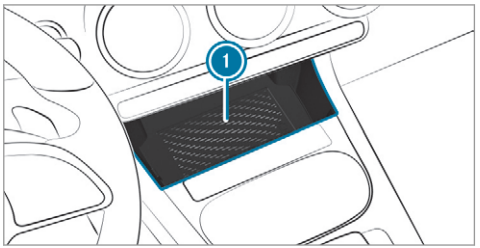

▶ Place the mobile phone as close to the centre of the marked surface on mat 1 as possible with the display facing upwards. When a message is shown in the multimedia system, the mobile phone is being charged.

Malfunctions during the charging process are shown in the media display.

ⓘ The mat can be removed for cleaning, e.g. using clean, lukewarm water.

Stowage compartment without cover

Make sure the mobile phone is properly stored and secured to prevent it from falling out while you are driving.

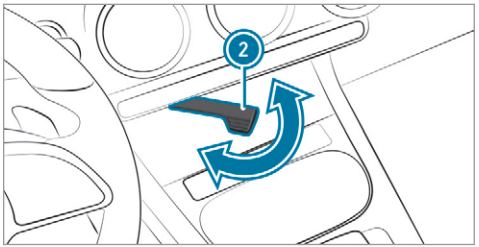

▶ **To secure the mobile phone:** swing lever 2 out.

Radio type approval numbers for Brazil

This device operates on a secondary basis, that is to say it has no protection against harmful interference, not even from the same type of stations, and must not cause interference with systems operating on a primary basis.

This product is permitted in accordance with the procedure defined in Directive 242/2000 by the

Brazilian telecommunications agency ANATEL and meets the applicable technical requirements.

Further information is available on the ANATEL website. www.anatel.gov.br

- Further information on the declaration of conformity for wireless vehicle components (→ page 25).

Fitting/removing the floor mats

⚠ WARNING Risk of accident due to objects in the driver's footwell

Objects in the driver's footwell may impede pedal travel or block a depressed pedal.

This jeopardises the operating and road safety of the vehicle.

- Stow all objects in the vehicle securely so that they cannot get into the driver's footwell.
- Always fit the floor mats securely and as prescribed in order to ensure that there is always sufficient room for the pedals.
- Do not use loose floor mats and do not place floor mats on top of one another.

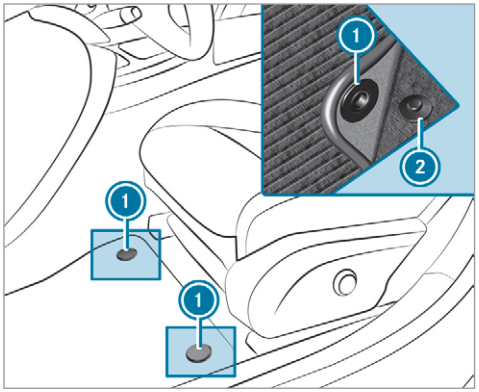

- **To fit:** slide the corresponding seat backwards and lay the floor mat in the footwell.
- Press the studs (1) onto the holders (2).
- Adjust the corresponding seat.
- **To remove:** pull the floor mat off the holders (2).
- Remove the floor mat.

Exterior lighting

Notes on adjusting the lights when driving abroad

It is not necessary to adjust the headlamps. The legal requirements are also met in countries in which traffic drives on the other side of the road.

Information about lighting systems and your responsibility

The various lighting systems of the vehicle are only aids. The driver of the vehicle is responsible for correct vehicle illumination in accordance with the prevailing light and visibility conditions, legal requirements and traffic situation.

Light switch

Operating the light switch

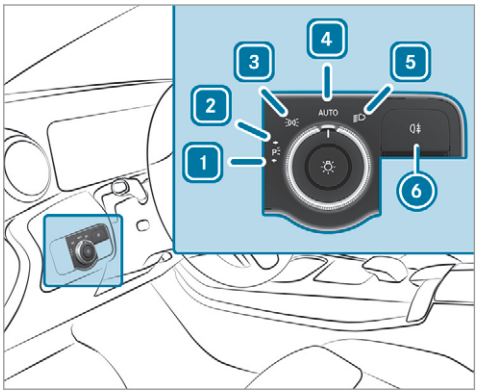

1 ←P≡ Left-hand parking lights
2 P≡→ Right-hand parking lights
3 ≡D≡ Standing lights and licence plate lighting
4 AUTO Automatic driving lights (preferred light switch position)
5 ≡D Low beam / high beam
6 0≠ Switches the rear fog light on/off

When low beam is activated, the indicator lamp for the standing lights ≡D≡ is deactivated and replaced by the low beam indicator lamp ≡D.

▶ Always park your vehicle safely using sufficient lighting, in accordance with the relevant legal stipulations.

! NOTE Battery discharging by operating the standing lights

Operating the standing lights over a period of hours puts a strain on the battery.

▶ Where possible, switch on the right P≡→ or left ←P≡ parking light.

In the event of severe battery discharging, the standing lights or parking lights are automatically switched off to facilitate the next engine start.

The exterior lighting (except standing and parking lights) will switch off automatically when the driver's door is opened.

- Observe the notes on surround lighting (→ page 142).

Automatic driving lights function
The standing lights, low beam and daytime running lights will be switched on automatically depending on the ignition status and the light conditions.

⚠ **WARNING** Risk of accident when the dipped beam is switched off in poor visibility

When the light switch is set to AUTO, the dipped beam may not be switched on automatically if there is fog, snow or other causes of poor visibility such as spray.

▶ In such cases, turn the light switch to .

The automatic driving lights are only an aid. You are responsible for vehicle lighting.

Switching the rear fog lights on or off
Requirements:

- The light switch is in the or AUTO position.

▶ Press the button.

Please observe the country-specific laws on the use of rear fog lamps.

Adjusting the headlamp range (halogen headlamps)
The headlamp range adjuster allows you to adjust the cone of light from the headlamps in relation to the vehicle's load condition.

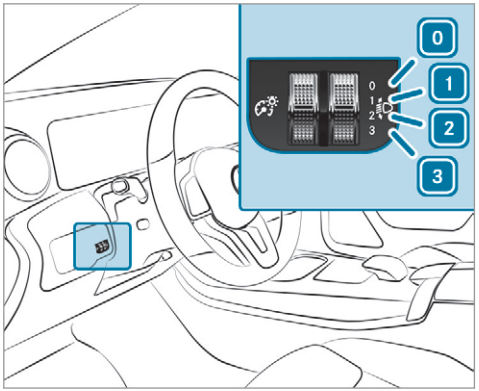

0 Driver's seat and front passenger seat occupied
1 Driver's seat, front passenger seat and rear seats occupied
2 Driver's seat, front passenger seat and rear seats occupied, load compartment laden
3 Driver's seat and front passenger seat occupied and maximum permissible rear axle load utilised

- Turn the headlamp range adjuster to the position that corresponds to the load condition of your vehicle.

Operating the combination switch for the lights

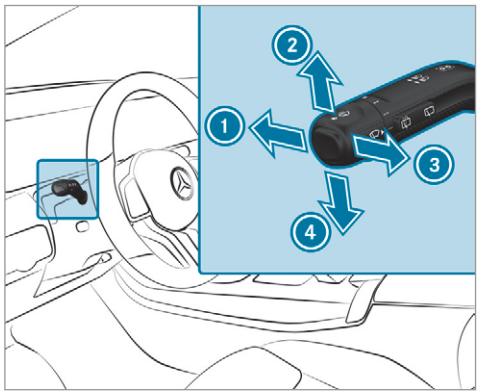

1 High beam
2 Turn signal light, right
3 Headlamp flashing
4 Turn signal light, left

- Use the combination switch to activate the desired function.

High beam

- **To switch on:** turn the light switch to the [≡D] or [AUTO] position.
- Push the combination switch in the direction of arrow 1.
  When the high beam is activated, the indicator lamp for low beam [≡D] will be deactivated and replaced by the indicator lamp for high beam [≡D].
- **To switch off:** push the combination switch in the direction of arrow 1 or pull it in the direction of arrow 3.

Headlamp flashing

- Pull the combination switch in the direction of arrow 3.

Turn signal light

- **To indicate briefly:** push the combination switch briefly to the point of resistance in the direction of arrow 2 or 4.
  The corresponding turn signal light will flash three times.
- **To indicate permanently:** push the combination switch beyond the point of resistance in the direction of arrow 2 or 4.

  Vehicles with Active Lane Change Assist:
  - Indicator operation activated by the driver can extend for the duration of the lane change.
  - If the driver indicated directly beforehand but a lane change was not immediately possible, the turn signal indicator may activate automatically.

Activating/deactivating the hazard warning lamps

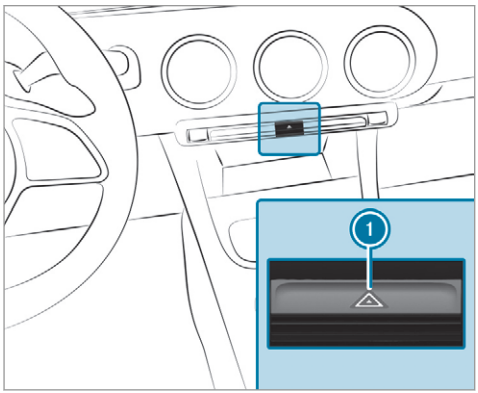

▶ Press button (1).

The hazard warning lamps will switch on automatically if:

- the airbag has been deployed.
- the vehicle is heavily braked from a speed of more than 70 km/h to a standstill.

When you pull away again, the hazard warning lamps will switch off automatically at approximately 10 km/h. You can also switch off the hazard warning lamps using button (1).

Adaptive functions, MULTIBEAM LED

Functions of the Intelligent Light System

The MULTIBEAM LED headlamps adapt to the driving and weather situation and provide extended functions for improved illumination of the road.

The system comprises the following functions:

- Active headlamps (→ page 137)
- Cornering light (→ page 138)
- Motorway mode (→ page 138)
- City lighting (→ page 138)

System limits

- The system is active only when it is dark.

Active headlamps function

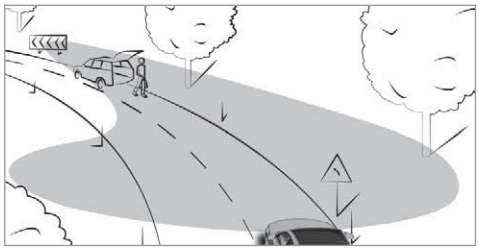

Functions of the active headlamps:

- The headlamps follow the steering movements.
- Relevant areas are better illuminated during a journey.

The functions are active when the high beam is switched on.

Cornering light function

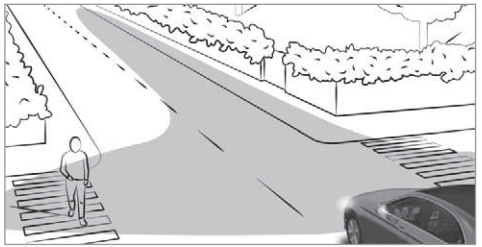

The cornering light function improves the illumination of the carriageway over a wide angle in the turning direction, enabling better visibility on tight bends, for example. It can be activated only when the low beam is switched on.

The function is active in the following cases:

- at speeds below 40 km/h when the turn signal indicator is switched on or the steering wheel is turned
- at speeds between 40 km/h and 70 km/h when the steering wheel is turned

Roundabout and intersection function: the cornering light will be activated on both sides based on an evaluation of the current GPS position of the vehicle. It will remain active until after the vehicle has left the roundabout or the intersection.

Motorway mode function

Motorway mode increases the range and brightness of the cone of light, enabling better visibility.

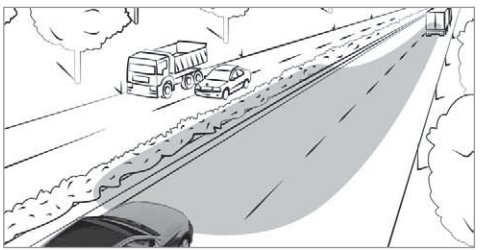

The function is enabled if a motorway journey is detected by:

- the vehicle's speed
- the multifunction camera
- the GPS

The function will not be enabled in the following cases:

- at speeds below 80 km/h.

City lighting function

City lighting improves the illumination of roadsides within built-up areas using a broad distribution of light.

The function is active in the following cases:

- at low speeds
- in illuminated parts of built-up areas

Switching the Intelligent Light System on/off

Requirements:

- the ignition is switched on.

Multimedia system:

→ ⌂ ▸▸ Settings ▸▸ Lights ▸▸ Intelligent Light System

▶ Activate or deactivate the function.

Adaptive Highbeam Assist

Adaptive Highbeam Assist function

WARNING Risk of accident despite Adaptive Highbeam Assist

Adaptive Highbeam Assist does not recognise the following road users:

- Road users without lights, e.g. pedestrians
- Road users with poor lighting, e.g. cyclists
- Road users whose lighting is obstructed, e.g. by a barrier

On very rare occasions, Adaptive Highbeam Assist may fail to recognise other road users with their own lighting, or may recognise them too late.

In this, or in similar situations, the automatic main beam will not be deactivated or will be activated despite the presence of other road users.

▶ Always observe the traffic carefully and switch off the main beam in good time.

Adaptive Highbeam Assist cannot take into account road, weather or traffic conditions.

Detection may be restricted in the following cases:

- In poor visibility, e.g. fog, heavy rain or snow
- If there is dirt on the sensors or the sensors are obscured

Adaptive Highbeam Assist is only an aid. You are responsible for adjusting the vehicle's lighting to the prevailing light, visibility and traffic conditions.

ⓘ Adaptive Highbeam Assist is available only in vehicles with LED high performance headlamps.

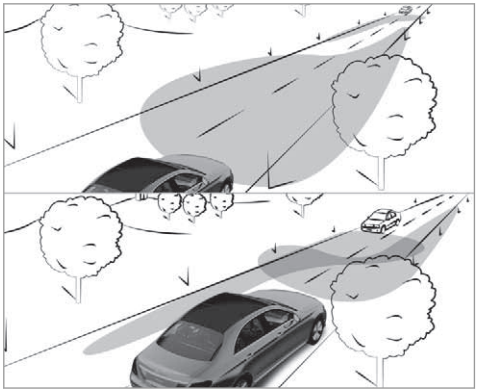

The Adaptive Highbeam Assist automatically switches between the following types of light:

- Low beam
- High beam

At speeds greater than 30 km/h:

- If no other road users are detected, the high beam will be switched on automatically.

The high beam switches off automatically in the following cases:

- At speeds below 25 km/h.
- If other road users are detected.
- If street lighting is sufficient.

At speeds greater than approximately 50 km/h:

- The headlamp range of the low beam is regulated automatically based on the distance to other road users.

The system's optical sensor is located behind the windscreen near the overhead control panel.

Switching Adaptive Highbeam Assist on/off

- **To switch on:** turn the light switch to the AUTO position.
- Switch on the main beam using the combination switch.
  When the main beam is switched on automatically in the dark, the indicator lamp on the multifunction display comes on.
- **To switch off:** switch off the main beam using the combination switch.

Adaptive Highbeam Assist Plus

Adaptive Highbeam Assist Plus function

WARNING Risk of accident despite Adaptive Highbeam Assist Plus

Adaptive Highbeam Assist Plus does not recognise the following road users:

- Road users without lights, e.g. pedestrians
- Road users with poor lighting, e.g. cyclists
- Road users whose lighting is obstructed, e.g. by a barrier

On very rare occasions, Adaptive Highbeam Assist Plus may fail to recognise other road users that have lights, or may recognise them too late.

In this, or in similar situations, the automatic main beam will not be deactivated or will be activated despite the presence of other road users.

- Always observe the traffic carefully and switch off the main beam in good time.

Adaptive Highbeam Assist Plus cannot take into account road, weather or traffic conditions.

Detection may be restricted in the following cases:

- In poor visibility, e.g. fog, heavy rain or snow
- If there is dirt on the sensors or the sensors are obscured

Adaptive Highbeam Assist Plus is only an aid. You are responsible for adjusting the vehicle's lighting to the prevailing light, visibility and traffic conditions.

Adaptive Highbeam Assist Plus is available only in vehicles with Intelligent Light System.

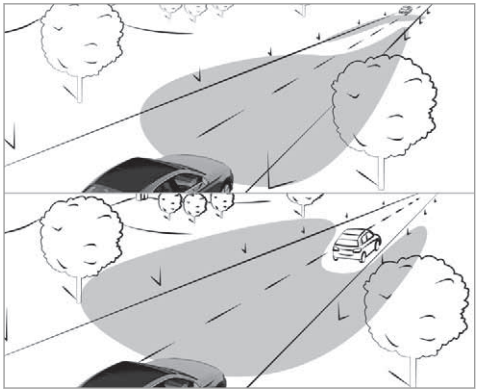

The Adaptive Highbeam Assist Plus automatically switches between the following types of light:

- Low beam
- Partial high beam
- High beam

Partial high beam uses the high beam to shine past other road users rather than dazzling them.

The vehicle in front will be illuminated by the low beam.

At speeds greater than 30 km/h:

- If no other road users are detected, the high beam will be switched on automatically.
- If other road users are detected, the partial high beam will be switched on automatically.

At speeds below 25 km/h or when there is sufficient street lighting:

- The high beam will switch off automatically.
- The partial high beam will switch off automatically.

The system's optical sensor is located behind the windscreen near the overhead control panel.

Switching Adaptive Highbeam Assist Plus on/off

- **To switch on:** turn the light switch to the AUTO position.
- Switch on the main beam using the combination switch.
  When the main beam is switched on automatically in the dark, the indicator lamp on the multifunction display will light up.
- **To switch off:** switch off the main beam using the combination switch.

Setting the exterior lighting switch-off delay time

Requirements:

- The light switch is in the AUTO position.

Multimedia system:

Settings ▸▸ Lights ▸▸ Ext. light. del. sw. off

- Set the switch-off delay time.
  The exterior lighting is activated for the set time when the vehicle is parked.

Switching the surround lighting on/off

Multimedia system:

→ ⌂ ▸▸ Settings ▸▸ Lights ▸▸ Surround lighting

When Surround lighting is active, the exterior lighting lights up for 40 seconds after the vehicle is unlocked. When you start the vehicle, the surround lighting is deactivated and the automatic driving lights are activated.

▶ Activate or deactivate the function.

Interior lighting

Adjusting the interior lighting

Front overhead control panel

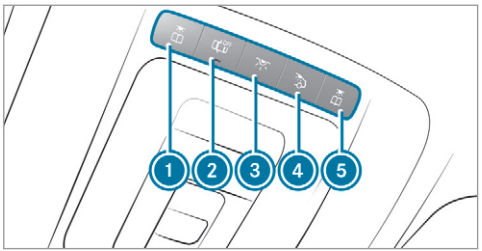

① Front left reading lamp
② Automatic interior lighting control
③ Front interior lighting
④ Rear interior lighting
⑤ Front right reading lamp

▶ **To switch on or off:** press button ① – ⑤ accordingly.

Control panel in the grab handle

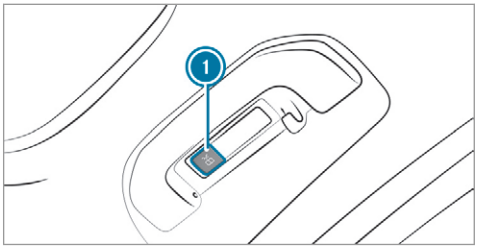

① Rear reading lamp

▶ **To switch on or off:** press button ①.

Adjusting the ambient lighting

Multimedia system:

→ ⌂ ▸▸ Comfort ▸▸ Ambient lighting

Setting the colour

▶ Select Colour.

▶ Set the desired colour.

ⓘ There are 64 colours available.

Adjusting the brightness

- Select Brightness.
- Adjust the brightness.

Activating the brightness for zones

- Select Brightness.
- Select Brightness zones.
- Activate or deactivate the function.
  The EMPHASIS, AMBIENT and VENTS zones can be set separately.

Activating multi-coloured lighting

- Select Colour.
- Select Multi-colour.
  There are ten preset colour combinations available.
- Select a colour combination.

Activating multi-coloured animation

- Select Colour.
- Select Multi-colour animat..
  The chosen colour combination will change at predefined intervals.

Activating welcome lighting

- Select Colour.
- Select Welcome.
  When the vehicle is unlocked, a special ambient lighting sequence will run.

Activating dependency on air conditioning settings

- Select Colour.
- Select Climate.
  If changes are made to the temperature setting in the vehicle, the colour of the ambient lighting will change briefly.

Switching the interior lighting switch-off delay time on/off

Multimedia system:

→ ⌂ ▸▸ Settings ▸▸ Lights ▸▸ Int. light. del. sw. off

- Switch the lighting switch-off delay time on or off.
  When this function is active, the interior lighting is lit up for short time after the vehicle has been locked.

Changing bulbs (only for vehicles with halogen headlamps)

Notes on changing bulbs

⚠ **WARNING** Risk of burns from hot component parts whilst replacing a bulb

Bulbs, lamps and plugs can become very hot during operation.

When replacing a bulb, you could burn yourself on these component parts.

▶ Allow the component parts to cool down before replacing the bulb.

- Do not use a bulb if it has been dropped or if its glass has been scratched. The bulb may otherwise explode.
- Do not touch the glass bulb with your bare hands.
- Protect bulbs from moisture and do not allow bulbs to come into contact with liquids.

Overview of the bulbs to be changed

Halogen headlamps

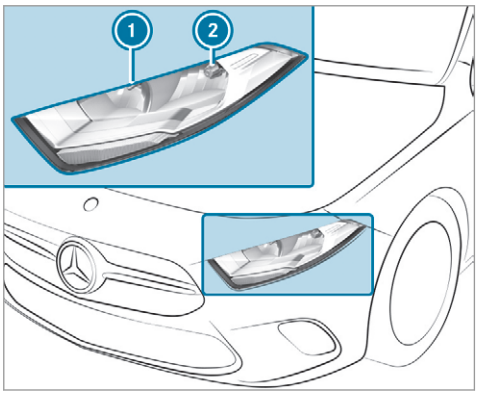

1 High beam: H7 55 W bulb
2 Low beam: H7 55 W bulb

Tail lamps

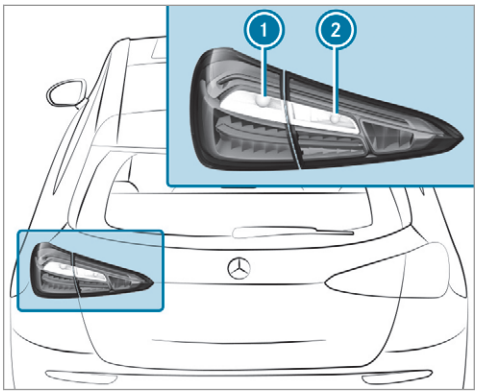

1 Turn signal light: PY 21 W bulb
2 Reversing light: W 16 W bulb

Changing the front bulbs (vehicles with halogen headlamps)

Fitting/removing the cover on the front wheel arch
Requirements:

- The lighting system is switched off.
- The appropriate front wheel is turned inwards.

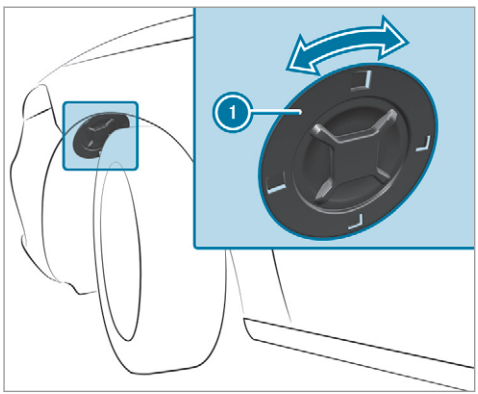

- **To remove:** turn cover (1) to the left and remove it from the wheel arch liner.
- **To install:** insert cover (1) into the wheel arch liner and turn it to the right until it engages.

Replacing light sources in the halogen headlamp
Requirements:

- **Low beam:** an H7 55 W light source is available.
- **High beam:** an H7 55 W light source is available.

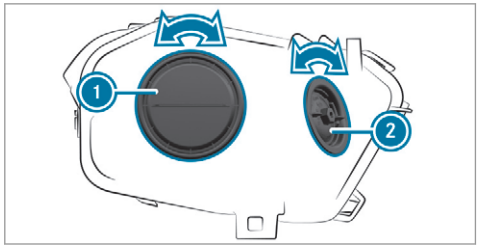

(1) Low beam housing cover
(2) High beam housing cover

- Switch the lighting system off.
- Remove the cover in the front wheel arch (→ page 145).
- Turn the relevant housing cover anti-clockwise and remove it.
- Turn the socket anti-clockwise and remove it.
- Pull the light source out of the socket.
- Insert the new light source into the socket such that the entire base of the light source is resting on the bottom of the socket.

- Insert the socket and turn it clockwise.
- Press on the housing cover and turn it clockwise.
- Replace the cover in the front wheel arch (→ page 145).

Changing the rear bulbs (vehicles with halogen headlamps)

Replacing the tail lamp bulbs

- Due to their locations, have the bulbs for the turn signal light and reversing light changed at a qualified specialist workshop.

Windscreen wipers and windscreen washer system

Switching the windscreen wipers on/off

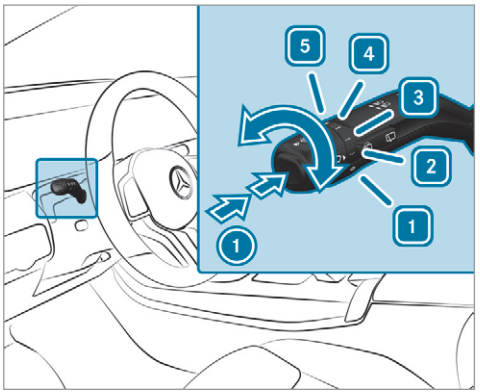

1 0 Windscreen wipers off
2 ••• Automatic wiping, normal
3 •••• Automatic wiping, frequent
4 — Continuous wiping, slow
5 = Continuous wiping, fast

- Turn the combination switch to the correct position 1 - 5.
- **Single wipe/washing:** push the button on the combination switch in the direction of arrow 1.
  - Single wipe
  - Wipes with washer fluid

Switching the rear window wiper on/off

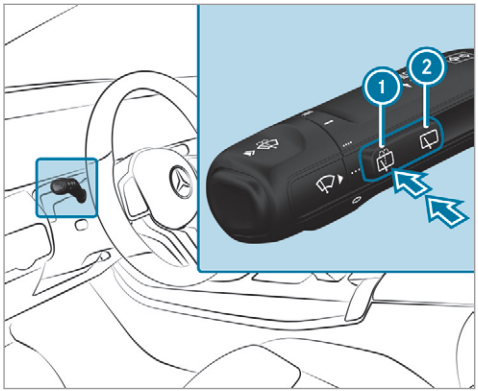

1 Single wipe/washing
2 Intermittent wiping

- **Single wipe:** press button 1 to the point of resistance.
- **Wiping with washer fluid:** press button 1 beyond the point of resistance.
- **Switching intermittent wiping on/off:** press button 2.
  The symbol will appear on the instrument cluster when the rear window wiper is switched on.

Replacing the windscreen wiper blades

WARNING Risk of becoming trapped if the windscreen wipers are switched on while wiper blades are being replaced

If the windscreen wipers begin to move while you are changing the wiper blades, you can be trapped by the wiper arm.

- Always switch off the windscreen wipers and ignition before changing the wiper blades.

Moving the wiper arms into the replacement position

- Switch the ignition on and switch off again immediately.
- Within around 15 seconds, press the button on the combination switch for approximately three seconds(→ page 146).
  The wiper arms will move into the replacement position.

Removing the wiper blades

- Fold the wiper arms away from the windscreen.

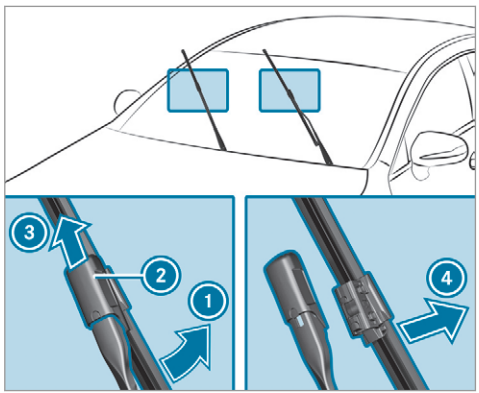

- Hold the wiper arm with one hand. With the other hand, turn the wiper blade in the direction of arrow (1) away from the wiper arm as far as it will go.
- Slide catch (2) in the direction of arrow (3) until it engages in the removal position.
- Remove the wiper blade from the wiper arm in the direction of arrow (4).

Fitting the wiper blades

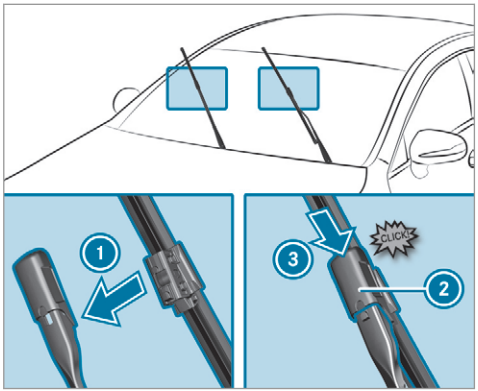

- Insert the new wiper blade into the wiper arm in the direction of arrow (1).
- Slide catch (2) in the direction of arrow (3) until it engages in the locking position.
- Make sure that the wiper blade is seated correctly.
- Fold the wiper arms back onto the windscreen.
- Switch on the ignition.
- Press the button on the combination switch (→ page 146).
  The wiper arms will move into the original position.
- Switch the ignition off.

Maintenance display

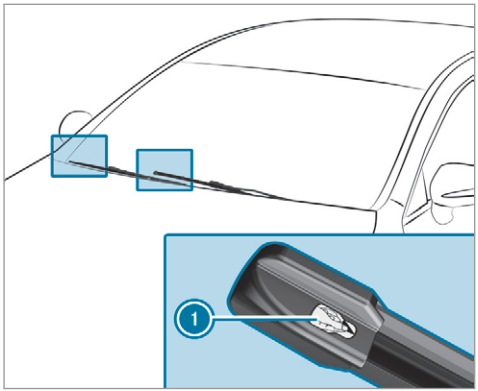

▶ Remove the protective film (1) from the maintenance display on the tip of the newly fitted wiper blades.

If the colour of the maintenance display changes from black to yellow, the wiper blades should be replaced.

ⓘ The duration until the colour changes varies depending on the usage conditions.

Replacing the rear window wiper blade

⚠ **WARNING** Risk of becoming trapped if the windscreen wipers are switched on while wiper blades are being replaced

If the windscreen wipers begin to move while you are changing the wiper blades, you can be trapped by the wiper arm.

▶ Always switch off the windscreen wipers and ignition before changing the wiper blades.

Removing the wiper blade

▶ Switch off the ignition.

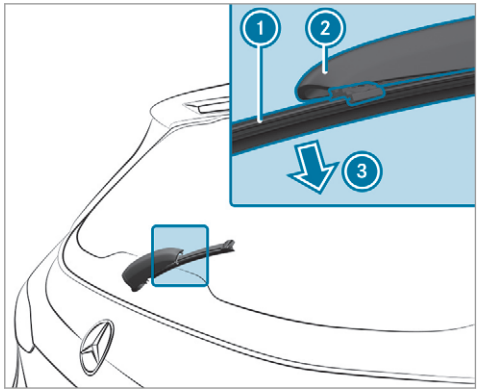

▶ Fold wiper arm (2) away from the rear window until it engages in the replacement position.

▶ Unclip wiper blade (1) from wiper arm (2) and remove it in the direction of arrow (3).

Fitting the wiper blade

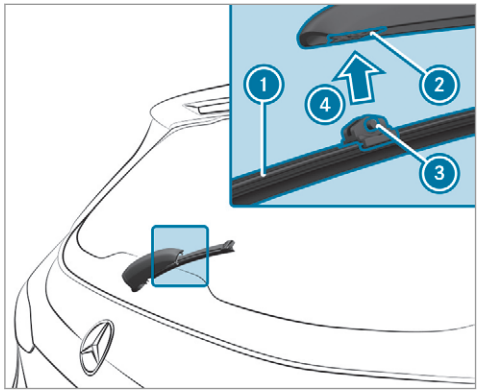

- Position wiper blade (1) with both lugs (3) on holder (2) on the wiper arm.
- Push wiper blade (1) in the direction of arrow (4) until it engages in holder (2).
- Make sure that wiper blade (1) is seated correctly.
- Fold the wiper arm from the replacement position back onto the rear window.

Mirrors

Operating the outside mirrors

⚠ **WARNING** Risk of injury through adjusting vehicle settings while the vehicle is in motion

You could lose control of the vehicle in the following situations:

- if you adjust the driver's seat, the head restraints, the steering wheel or the mirror while the vehicle is in motion
- if you fasten your seat belt while the vehicle is in motion

- Before starting the engine: adjust the driver's seat, the head restraints, the steering wheel or the mirror and fasten your seat belt.

⚠ **WARNING** Risk of accident due to misjudgement of distances when using the outside mirror

The outside mirrors reflect objects on a smaller scale. The objects in view are in fact closer than they appear.

As a result, you may misjudge the distance between you and the road user driving behind you, e.g. when changing lanes.

- Therefore, always look over your shoulder in order to ensure that you are aware of the actual distance between you and the road users driving behind you.

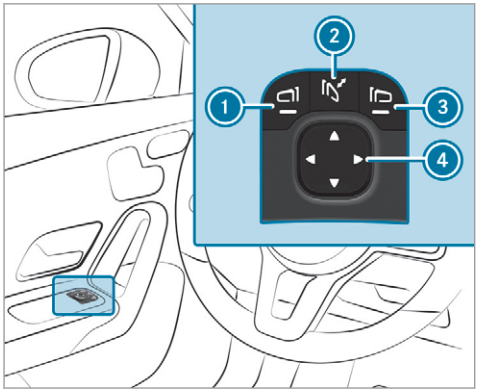

- **To fold in or out:** briefly press button (2).
- **To set:** press button (1) or (3) to select the outside mirror to be adjusted.
- Press button (4) to adjust the position of the mirror glass.

ⓘ If the battery has been disconnected or completely discharged, you will have to reset the outside mirrors. Only then will the automatic mirror folding function work properly.

- **To adjust:** briefly press button (2).

An outside mirror that has been pushed out of position can be engaged in position again as follows:

- **Vehicles without electrically folding outside mirrors:** manually move the outside mirror into the correct position.
- **Vehicles with electrically folding outside mirrors:** press and hold button (2). You will hear a click and the mirror will audibly engage in position. The outside mirror will now be set to the correct position.

Automatic anti-dazzle mirrors function

⚠ **WARNING** Risk of acid burns and poisoning due to the anti-dazzle mirror electrolyte

Electrolyte may escape if the glass in an automatic anti-dazzle mirror breaks.

The electrolyte is hazardous to health and causes irritation. It must not come into contact with your skin, eyes, respiratory organs or clothing or be swallowed.

- If you come into contact with electrolyte, observe the following:
  - Immediately rinse the electrolyte from your skin with water and seek medical attention.
  - If electrolyte comes into contact with your eyes, immediately rinse them thoroughly with clean water and seek medical attention.
  - If the electrolyte is swallowed, immediately rinse your mouth out thoroughly. Do not induce vomiting. Seek medical attention immediately.
  - Immediately change out of clothing which has been contaminated with electrolyte.
  - If an allergic reaction occurs, seek medical attention immediately.

The inside rearview mirror and the outside mirror on the driver's side will automatically go into anti-dazzle mode if light from a headlamp hits the sensor on the inside rearview mirror.

System limits

The system will not go into anti-dazzle mode if:

- The engine is switched off.
- Reverse gear is engaged.
- The interior lighting is switched on.

Front-passenger outside mirror parking position function

ⓘ The parking position is available only in vehicles with a memory function.

The parking position makes parking easier.

The front-passenger outside mirror will swivel downwards in the direction of the rear wheel on the front passenger's side when:

- the parking position is stored (→ page 152).
- the front-passenger mirror is selected.
- reverse gear is engaged.

The front-passenger outside mirror will move back to its original position when:

- you shift the transmission to another transmission position.
- you are travelling at a speed greater than 15 km/h.
- you press the button for the outside mirror on the driver's side.

Storing the parking position of the front-passenger outside mirror using reverse gear

Storing

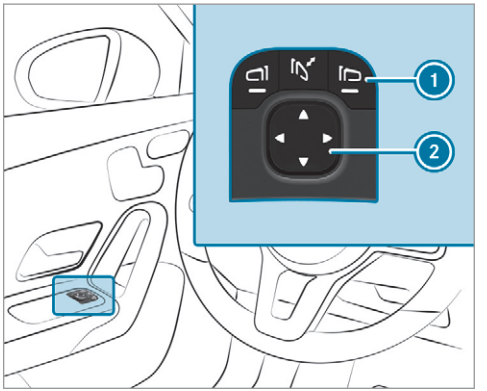

▶ Press button 1 to select the front-passenger outside mirror.

▶ Engage reverse gear.

▶ Move the front-passenger outside mirror into the desired parking position using button 2.

Calling up

- Press button (1) to select the front-passenger outside mirror.
- Engage reverse gear.
  The front-passenger outside mirror will move into the stored parking position.

Activating/deactivating the automatic mirror folding function

Multimedia system:

→ ⌂ ▸▸ Settings ▸▸ Vehicle

- Switch Automatic fold-in on or off.

Operating the sun visors

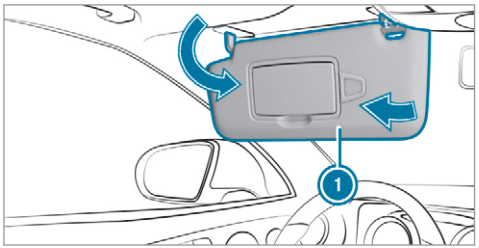

- **Glare from the front:** fold sun visor (1) down.
- **Glare from the side:** swing sun visor (1) to the side.

Overview of climate control systems

Notes on climate control

An interior air filter in combination with the pre-filter in the engine compartment must always be used so that the air conditioning system, pollution level monitoring and the air filtration work correctly. Make sure that the filter is installed correctly and the filter housing in the engine compartment is closed correctly using the cap and always tightly sealed when in operation. Use filters recommended and approved by Mercedes-Benz. Always have service work carried out at a qualified specialist workshop.

THERMATIC control panel overview

Plug-in hybrid: be sure to observe the notes in the Supplement. Otherwise, you may fail to recognise dangers.

The indicator lamps in the buttons AUTO, MAX, REAR, A/C and indicate that the corresponding function is activated.

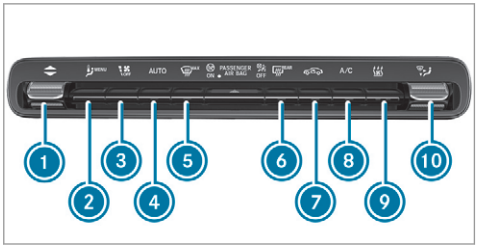

1. ▼▲ Sets the temperature
2. Vehicles with a stationary heater only: MENU calls up the air conditioning menu
3. Sets the airflow or switches off climate control
4. AUTO Sets climate control to automatic (→ page 156)
5. MAX Defrosts the windscreen
6. REAR Switches the rear window heater on/off
7. Switches air-recirculation mode on/off(→ page 157)
8. A/C Switches the A/C function on/off(→ page 155)
9. Vehicles with a stationary heater only: switches the stationary heater on/off (→ page 158)
10. Sets the air distribution

THERMOTRONIC control panel overview

Plug-in hybrid: be sure to observe the notes in the Supplement. Otherwise, you may fail to recognise dangers.

The indicator lamps in the buttons AUTO, MAX, REAR, A/C REST, SYNC and indicate that the corresponding function is activated.

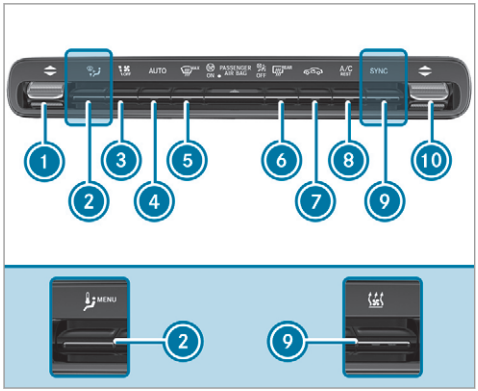

(1) ▼▲ Sets the temperature on the driver's side

(2) Vehicles without a stationary heater: sets the air distribution
Vehicles with a stationary heater: MENU calls up the air conditioning menu

(3) Sets the airflow or switches off climate control

(4) AUTO Sets climate control to automatic (→ page 156)

(5) Defrosts the windscreen

(6) REAR Switches the rear window heater on/off

(7) Switches air-recirculation mode on/off(→ page 157)

(8) A/C Switches the A/C function on/off(→ page 155)
Switches residual heat on/off (→ page 157)

(9) Vehicles without a stationary heater: SYNC activates/deactivates synchronisation (→ page 157)
Vehicles with a stationary heater: switches the stationary heater on/off (→ page 158)

(10) ▼▲ Sets the temperature on the front passenger side

Operating the climate control system

Switching climate control on/off

- **To switch on:** set the airflow to level 1 or higher using the button.
- **To switch off:** set the airflow to level 0 using the button.

ⓘ If climate control is switched off, the windows may mist up more quickly. Switch off climate control only briefly.

Switching the A/C function on or off via the control panel

The A/C function heats, cools and dehumidifies the vehicle's interior air.

- Press the A/C button.

Switch off the A/C function only briefly; otherwise, the windows may mist up more quickly.

Condensation may drip from the underside of the vehicle when cooling mode is active. This is not a sign that there is a fault.

Calling up the air conditioning menu

Calling up the air conditioning menu using the multimedia system

- Select one of the temperature displays at the lower edge of the media display.

Calling up the air conditioning menu using the button on the control panel

- Press the MENU button on the control panel.

Activating/deactivating the A/C function via the multimedia system

The A/C function heats, cools and dehumidifies the vehicle's interior air.

- Call up the air conditioning menu (→ page 156).
- Select First row of seats.
- Select A/C.
  Depending on the previous status, the function is activated or deactivated.

Setting climate control to automatic mode

In automatic mode, the set temperature is controlled and maintained at a constant level by the air supply.

- Press the AUTO button.
- **To switch to manual mode:** press the or AUTO button.

In automatic mode, you can choose between five different air quantities using the button. Automatic mode is retained.

Overview of air distribution settings

The symbols on the display indicate which vents the airflow is being directed through:

- defroster and side air vents
- centre and side air vents
- footwell and side air vents
- centre, side and footwell vents
- defroster, footwell and side air vents
- all vents
- defroster, middle and side air vents
- automatic air distribution

Setting the air distribution

- Call up the air conditioning menu (→ page 156).
- Select First row of seats or Second row of seats.
- **To set the air distribution:** select , or .
- Set the airflow.

ⓘ Several air distribution options can be selected at the same time, for example to set the temperature/air conditioning for the windscreen and the footwells simultaneously. The climate control for the windscreen can only be selected for the first seat row.

Activating/deactivating the climate control synchronisation function via the control panel

Climate control can be set centrally using the synchronisation function. The temperature and air distribution settings for the driver's side are adopted automatically for the front passenger side.

▶ Press the SYNC button.

The synchronisation function is deactivated if the settings for one of the other climate zones are changed.

Activating/deactivating the climate control synchronisation function using the multimedia system

Climate control can be set centrally using the synchronisation function. The driver's settings for temperature, air quantity and air distribution are adopted automatically for all climate zones.

▶ Call up the air conditioning menu (→ page 156).

▶ Select First row of seats.

▶ Select SYNC.
Depending on the previous status, the function is activated or deactivated.

Demisting the windows

Windows misted up on the inside

▶ Press the AUTO button.

▶ If the windows continue to mist up: press the MAX button.

Windows misted up on the outside

▶ Switch on the windscreen wipers.

▶ Press the AUTO button.

Switching air-recirculation mode on/off

▶ Press the button.
The interior air will be recirculated.

Air-recirculation mode automatically switches to fresh air mode after some time.

ⓘ If air-recirculation mode is switched on, the windows may mist up more quickly. Switch on air-recirculation mode only briefly.

Switches the residual heat on/off

Requirements:

- The vehicle is parked.

It is possible to make use of the residual heat from the engine to continue heating or ventilating the front compartment of the vehicle for approximately 30 minutes, depending on the temperature set.

▶ **To switch on:** press the A/C REST button.

Residual heat is switched off automatically.

Stationary heater/ventilation

Stationary heater/stationary ventilation function

- The air inside the vehicle is heated or ventilated to the set temperature.

- The air inside the vehicle cannot be cooled down to temperatures below the outside temperature.
- If the outside temperature changes, ventilation mode automatically switches to heating mode or heating mode automatically switches to ventilation mode.

The stationary heater and the exhaust gas outlet are situated in front of the right-hand front wheel.

Switching the stationary heater/stationary ventilation on/off via the control panel

⚠ **DANGER** Risk of fatal injury due to poisonous exhaust gases

If the tailpipe is blocked or sufficient ventilation is not possible, poisonous exhaust gases such as carbon monoxide may enter the vehicle. This is the case in enclosed spaces or if the vehicle gets stuck in snow, for example.

▶ Always switch the stationary heater off in enclosed spaces without an air extraction systems, e.g. in garages.

▶ Keep the tailpipe and the area around the vehicle free from snow when the engine or the stationary heater are running.

▶ Open a window on the windward side of the vehicle to ensure an adequate supply of fresh air.

⚠ **WARNING** Risk of fire due to hot stationary heater components

When the stationary heater is switched on, parts of the vehicle can become very hot, e.g. the stationary heater exhaust system.

Flammable materials such as leaves, grass or twigs may ignite if they come into contact with:

- hot parts of the stationary heater exhaust system
- the exhaust gas itself

There is a risk of fire.

▶ When the stationary heater is switched on, make sure that:

- hot vehicle parts do not come into contact with flammable materials.
- the exhaust gas can flow out of the stationary heater exhaust pipe unhindered.
- the exhaust gas does not come into contact with flammable materials.

! **NOTE** Battery discharge caused by stationary heater or stationary ventilation operation

Operating the stationary heater or stationary ventilation drains the battery.

▶ After heating or ventilating the vehicle twice, drive for a longer period of time.

Requirements:

- The fuel tank has been filled to at least ¼.

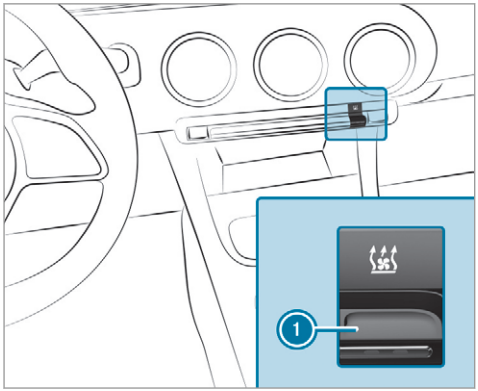

- Set the desired temperature using the ▼▲ button.
- Press button 1.
  The red or blue indicator lamp on button 1 will light up or go out.

The colours of the indicator lamp have the following meaning:

- **Blue:** stationary ventilation is switched on.
- **Red:** the stationary heater is switched on.
- **Yellow:** the departure time is preselected.

The stationary heater/stationary ventilation will switch off automatically after 50 minutes.

Operation using the app: the stationary heater/stationary ventilation can also be operated via the Mercedes me connect app. Further information can be found in the separate Owner's Manual under http://manuals.daimler.com/baix/cars/connectme/en_GB/index.html.

Setting the stationary heater / stationary ventilation via the multimedia system

- Call up the air conditioning menu (→ page 156).
- Select Auxiliary heating.

Selecting the departure time

- Select the time TIME A: XX, TIME B: XX or TIME C: XX.

Setting the departure time

- Select the time TIME A: XX, TIME B: XX or TIME C: XX.
- Select the pen beside the time.
- Set a time.

Setting the stationary heater/stationary ventilation via remote control

Requirements:

- The fuel tank has been filled to at least ¼.

Switching on immediately



- Press and hold the ON button.

Setting the departure time

- Briefly press the ON switch.
- Press the ◁ or ▷ button repeatedly until the time to be changed appears on the display.
- Press the ON and OFF buttons simultaneously.
  The ⏲ symbol will flash on the remote control display.
- Press the ◁ and ▷ buttons to set the desired departure time.
- Press the ON and OFF buttons simultaneously.
  The new departure time will be stored.

Up to three departure times can be stored.

- **To activate the departure time:** select the desired departure time and press and hold the ON button.
  The ⏰ symbol, the departure time and, depending on the selected departure time, the letter **A, B** or **C** will appear on the display.
- **To deactivate the departure time:** select the desired departure time and press and hold the OFF button.
  OFF will appear on the display.
- **To check the status of the stationary heater:** briefly press the ON button.

Switching off immediately

- Press and hold the OFF button.

Overview of the remote control displays (stationary heater/stationary ventilation)

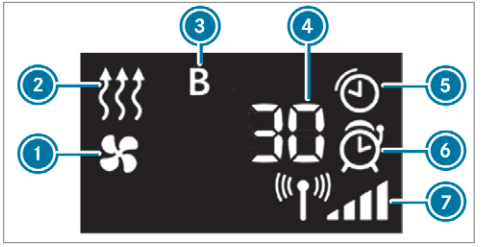

1. Stationary ventilation switched on
2. Stationary heater switched on
3. Selected departure time
4. Remaining time for the stationary heater/stationary ventilation (in minutes)
5. Stationary heater/stationary ventilation active
6. Departure time activated
7. Signal strength

Further possible displays:

- **Time:** activated departure time.
- **Zero minutes:** the running time for the stationary heater is increased, as the engine has not yet reached operating temperature when it is started.
- **OFF:** the stationary heater/stationary ventilation is switched off.

Replacing the remote control battery (stationary heater)

DANGER Serious damage to health caused by swallowing batteries

Batteries contain toxic and corrosive substances. Swallowing batteries may cause serious damage to health.

There is a risk of fatal injury.

- Keep batteries out of the reach of children.
- If batteries are swallowed, seek medical attention immediately.

ENVIRONMENTAL NOTE Environmental damage due to improper disposal of batteries

Batteries contain toxic and corrosive substances.

- Take discharged batteries to a qualified specialist workshop or to a collection point for used batteries.

Requirements:

- a CR2450 lithium battery

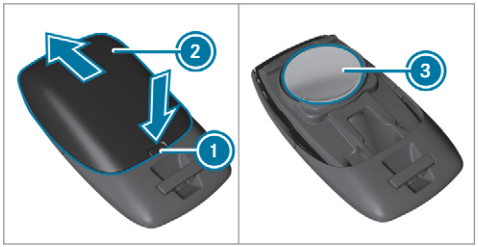

- Push a pointed object into recess (1).
- Slide battery cover (2) backwards in the direction of the arrow.
- Insert new battery (3) with the lettering facing upwards.
- Slide battery cover (2) in the opposite direction to the arrow onto the remote control until the battery cover engages.

Problems with the remote control for the stationary heater/stationary ventilation

Problem	Possible causes/consequences and ▶ Solutions
FAIL	The signal transmission between the transmitter and the vehicle is faulty. ▶ Change your position in relation to the vehicle, moving closer if necessary.
FAIL	The starter battery is not sufficiently charged. ▶ Charge the starter battery.
	The fuel tank content is below the reserve fuel level. ▶ Refuel at the nearest filling station.
FAIL	The stationary heater is malfunctioning. ▶ Have the stationary heater checked at a qualified specialist workshop.

Air vents

Adjusting the front air vents

WARNING - Risk of burns/frostbite due to not maintaining a sufficient distance to the air vents

Very hot or very cold air can flow from the air vents.

This could result in burns or frostbite in the immediate vicinity of the air vents.

▶ Always ensure that all vehicle occupants maintain a sufficient distance to the air vents.

▶ If necessary, redirect the airflow to another area of the vehicle interior.

To guarantee the flow of fresh air through the air vents into the vehicle interior, comply with the following:

- Always keep the vents and the ventilation grille in the vehicle interior free.
- Keep the air inlet free of deposits (→ page 461).

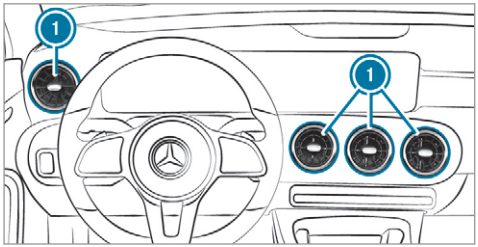

- **To open or close:** hold air vent (1) in the centre and turn it to the left (open) or right (closed) as far as it will go.
- **To adjust the air direction:** hold air vent (1) in the centre and move it up or down or to the left or right.

Adjusting the rear air vents

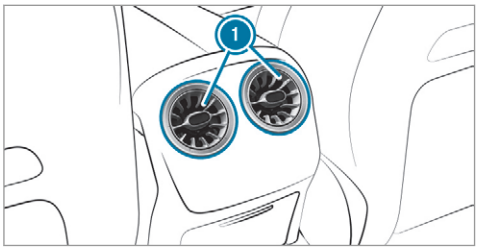

- **To open or close:** hold air vent (1) in the centre and turn it to the left (open) or right (closed) as far as it will go.
- **To adjust the air direction:** hold air vent (1) in the centre and move it up or down or to the left or right.

Driving

Notes on Mercedes-AMG vehicles

Observe the notes on the following topics in the Supplement, as you may otherwise fail to recognise dangers:

- Emotion Start
- AMG exhaust system
- RACE START
- DRIFT MODE
- AMG RIDE CONTROL
- AMG steering-wheel buttons

Switching on the power supply or the ignition (without engine start)

⚠ **WARNING** Risk of accident and injury due to children left unattended in the vehicle

If children are left unattended in the vehicle, they could:

- Open doors, thereby endangering other persons or road users.
- Get out and be struck by oncoming traffic.
- Operate vehicle equipment and become trapped, for example.

In addition, the children could also set the vehicle in motion, for example by:

- Releasing the parking brake.
- Changing the transmission position.
- Starting the vehicle.

▶ Never leave children unattended in the vehicle.

▶ When leaving the vehicle, always take the key with you and lock the vehicle.

▶ Keep the vehicle key out of reach of children.

Also observe the "Notes on pets in the vehicle".

This also applies to the Digital Vehicle Key if the "Digital Vehicle Key" function is activated via Mercedes me connect.

Requirements:

- the key is in the vehicle and has been recognised.
- or: a Digital Vehicle Key is located in the marked space (⟶ page 166).
- **Vehicles with automatic transmission:** the brake pedal is not depressed.
- **Vehicles with manual transmission:** the clutch pedal is not depressed.

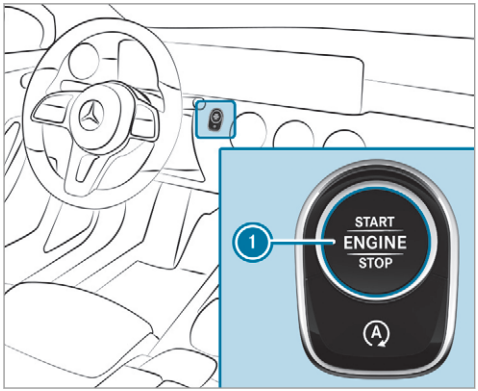

▶ **To switch on the power supply:** press button (1) once.
You can activate the windscreen wiper, for example.

The power supply is switched off again if the following conditions are met:

- you open the driver's door.
- you press button (1) twice more.

▶ **To switch on the ignition:** press button (1) twice.
The indicator lamps in the instrument cluster light up.

The ignition is switched off again if one of the following conditions is met:

- **vehicles with automatic transmission:**you do not start the vehicle within 15 minutes and the transmission is in position P or the electric parking brake is applied.
- **Vehicles with manual transmission:** you do not start the vehicle within 15 minutes and the electric parking brake is applied.
- you press button (1) once.

Starting the vehicle

Starting the vehicle with the start/stop button

DANGER Risk of death caused by exhaust gases

Combustion engines emit poisonous exhaust gases such as carbon monoxide. Inhaling these exhaust gases is hazardous to health and leads to poisoning.

▶ Never leave the engine or, if present, the auxiliary heating running in an enclosed space without sufficient ventilation.

WARNING Risk of fire caused by flammable material on the exhaust system

Flammable materials brought in by either animals or environmental influences may ignite if they come into contact with hot parts of the engine or exhaust system.

▶ Therefore, check regularly that there are no flammable materials in the

engine compartment or on the exhaust system.

Requirements:

- the key is in the vehicle and is recognised.
- or: a Digital Vehicle Key is located in the marked space and is recognised (→ page 166).

▶ **Vehicles with manual transmission:** depress the clutch pedal.

▶ **Vehicles with automatic transmission:** shift the transmission to position P or N.

▶ depress the brake pedal and press button 1 once.

▶ If the vehicle does not start: switch off non-essential consumers and press button 1 once.

If the vehicle still does not start, one of the following display messages appears in the multifunction display:

▶ Place the key in the marked space See Owner's Manual: start the vehicle in emergency operation mode (→ page 167).

or

▶ Key not detected Place smartphone in charging bracket: place the mobile phone in the marked space (→ page 132).

ⓘ You can switch off the engine while driving by pressing button 1 for about three seconds or by pressing button 1 three times within three seconds. Be sure to observe the safety notes under "Driving tips" (→ page 170).

Starting the vehicle with a Digital Vehicle Key

Requirements:

- one of the following versions of the Digital Vehicle Key is available:
  - suitable mobile phone
  - Digital Vehicle Key sticker
- the vehicle is equipped with the "Digital Vehicle Key" function.
- the "Digital Vehicle Key" function is activated via Mercedes me connect: https://www.mercedes.me.
- the mobile phone is sufficiently charged.

ⓘ You can check the suitability of your mobile phone by entering the phone number at https://www.mercedes.me. Information about suitable mobile phones can be obtained from your Mercedes-Benz service centre or at https://www.mercedes-benz.com/connect.

ⓘ Mercedes-Benz recommends that you carry the emergency key in case of function restrictions.

ⓘ The function is only available in combination with Mercedes me connect and only in certain countries.

ⓘ Protective cases around the mobile phone can impair the functionality.

Using the Digital Vehicle Key for the first time

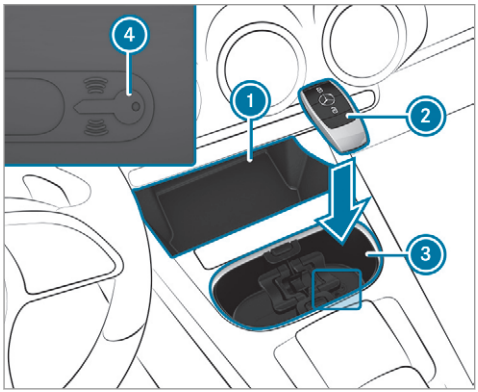

- Deactivate the key (2) (→ page 80).
- Place key (2) in marked space (3) on the symbol (4).
- Place the mobile phone or the Digital Vehicle Key sticker in the marked space (1).
- Start the vehicle using the start/stop button.

Any further starts with the Digital Vehicle Key

The key is not needed for any further starts.

- Place the mobile phone or the Digital Vehicle Key sticker in the marked space (1).
- Start the vehicle using the start/stop button.

The "Digital Vehicle Key" service can be deactivated in Mercedes me connect at https://www.mercedes.me. The function is then deactivated in the mobile phone via an online connection. If connection to the Internet is not possible, e.g. after the mobile phone or the Digital Vehicle Key sticker has been stolen, the key function can be deactivated at a Mercedes-Benz service centre.

Starting the vehicle with key in the marked space (emergency operation mode)

If the vehicle does not start and the Place the key in the marked space See Owner's Manual message appears in the multifunction display, you can start the vehicle in emergency operation mode.

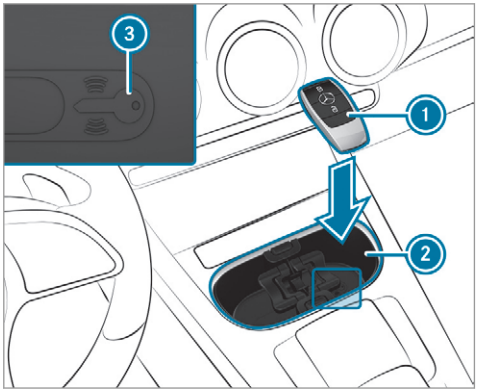

Marked space (example with cup holder without cover)

- Open the cover of marked space (2) if necessary.
- Make sure that marked space (2) is empty.
- Remove key (1) from the key ring.

- ▶ Place key ① in marked space ② on the symbol ③.
  The vehicle will start after a short time.
  If you remove key ① from marked space ② the engine continues running. For further engine starts however, key ① must be located in marked space ② on symbol ③ during the entire journey.
- ▶ Have the key ① checked at a qualified specialist workshop.

If the vehicle does not start:

- ▶ place key ① in marked space ② and leave it there.
- ▶ **Vehicles with manual transmission:** depress the clutch pedal.
- ▶ Depress the brake pedal and start the vehicle using the start/stop button.

ⓘ You can also switch on the power supply or the ignition with the start/stop button.

Starting the vehicle via Remote Online services

Cooling or heating the vehicle interior before commencing your journey

ⓘ This function is not available in all countries.

If you start the vehicle via your smartphone, the previously selected air conditioning adjustment is active.

Ensure the following before starting the engine:

- the legal stipulations in the area where your vehicle is parked allow engine starting via smartphone.
- it is safe to start and run the engine where your vehicle is parked.
- the fuel tank is sufficiently filled.
- the starter battery is sufficiently charged.

ⓘ You can also set the temperature with your smartphone. Information on Mercedes me connect and other services: https://www.mercedes.me
This function is not available for all models.

Charging the battery before commencing your journey

If the vehicle battery is discharged, you receive a message on your smartphone. You can then start the vehicle with the smartphone to charge the battery. The vehicle is automatically switched off after ten minutes.

Ensure the following before starting the engine:

- the legal stipulations in the area where your vehicle is parked allow engine starting via smartphone.
- it is safe to start and run the engine where your vehicle is parked.
- the fuel tank is sufficiently filled.

Starting the vehicle (Remote Online)

⚠ **WARNING** Risk of crushing or entrapment due to unintentional starting of the engine

Limbs could be crushed or trapped if the engine is started unintentionally during service or maintenance work.

▶ Always secure the engine against unintentional starting before carrying out maintenance or repair work.

Requirements:

- park position P is selected.
- the anti-theft alarm system is not activated.
- the panic alarm is not activated.
- the hazard warning lights are switched off.
- the bonnet is closed.
- the doors are closed and locked.
- the windows and sliding sunroof are closed.

▶ Start the vehicle using the smartphone. After every vehicle start, the engine runs for ten minutes.

You can carry out a maximum of two consecutive starting attempts. The vehicle must be started once with the key before trying to start the vehicle again with the smartphone. you can stop the vehicle again at any time.

ⓘ Further information can be found in the smartphone app.

Securing the engine against starting before carrying out maintenance or repair work:

▶ switch on the hazard warning lights.

or

▶ unlock the doors.

or

▶ open a side window or the sliding sunroof.

Running-in notes

Mercedes-AMG vehicles: observe the notes in the Supplement. Otherwise, you may fail to recognise dangers.

To preserve the engine during the first 1,500 km:

- drive at varying road speeds and engine speeds.
- drive the vehicle in drive program C or E.
- shift to the next highest gear at the very latest when the needle reaches the last third before the red area in the rev counter.
- do not shift down a gear manually in order to brake.
- avoid overstraining the vehicle, e.g. driving at full throttle.
- **vehicles with automatic transmission:** do not depress the accelerator pedal beyond the pressure point (kickdown).
- only increase the engine speed gradually and accelerate the vehicle to full speed after 1,500 km.

This also applies when the engine or parts of the drivetrain have been replaced.

Please also observe the following running-in notes:

- in certain driving and driving safety systems, the sensors adjust automatically while a certain distance is being driven after the vehicle has been delivered or after repairs. Full system effectiveness is not reached until the end of this teach-in process.
- brakepads, brake discs and tyres that are either new or have been replaced only achieve optimum braking effect and grip after several hundred kilometres of driving. Com-

pensate for the reduced braking effect by applying greater force to the brake pedal.

Notes on driving

⚠ WARNING Risk of accident due to objects in the driver's footwell

Objects in the driver's footwell may impede pedal travel or block a depressed pedal.

This jeopardises the operating and road safety of the vehicle.

- ▶ Stow all objects in the vehicle securely so that they cannot get into the driver's footwell.
- ▶ Always fit the floor mats securely and as prescribed in order to ensure that there is always sufficient room for the pedals.
- ▶ Do not use loose floor mats and do not place floor mats on top of one another.

⚠ WARNING Risk of accident due to unsuitable footwear

Operating the pedals may be impaired by wearing unsuitable footwear, e.g.:

- platform shoes
- high-heeled shoes
- slippers

- ▶ Always wear suitable footwear when driving so that you can operate the pedals safely.

⚠ WARNING Risk of accident when switching off the ignition when driving

If you switch off the ignition while driving, safety functions are restricted or no longer available. This may affect the power steering system and the brake force boosting, for example.

You will then need to use considerably more force to steer and brake.

- ▶ Do not switch off the ignition while driving.

⚠ DANGER Risk of death caused by exhaust gases

Combustion engines emit poisonous exhaust gases such as carbon monoxide. Inhaling these exhaust gases is hazardous to health and leads to poisoning.

- ▶ Never leave the engine or, if present, the auxiliary heating running in an enclosed space without sufficient ventilation.

⚠ WARNING Risk of skidding and of an accident due to shifting down on slippery road surfaces

If you shift down on slippery road surfaces to increase the engine braking effect, the drive wheels may lose traction.

- ▶ Do not shift down on slippery road surfaces to increase the engine braking effect.

⚠ **DANGER** Risk of fatal injury due to poisonous exhaust gases

If the tailpipe is blocked or sufficient ventilation is not possible, poisonous exhaust gases such as carbon monoxide may enter the vehicle. This is the case when the vehicle becomes stuck in snow, for example.

- Keep the tailpipe and the area around the vehicle free from snow when the engine or the stationary heater are running.
- Open a window on the side of the vehicle facing away from the wind to ensure an adequate supply of fresh air.

⚠ **WARNING** Risk of accident due to the brake system overheating

If you leave your foot on the brake pedal when driving, the brake system may overheat.

This increases the braking distance and the brake system may even fail.

- Never use the brake pedal as a footrest.
- Do not depress the brake pedal and the accelerator pedal at the same time while driving.

! **NOTE** Causing wear to the brake linings by permanently depressing the brake pedal

- Do not permanently depress the brake pedal while driving.
- To use braking effect of the engine, shift to a lower gear in good time.

! **NOTE** Damage to the drivetrain and engine when pulling away

- Do not warm up the engine while the vehicle is stationary. Pull away immediately.
- Avoid high engine speeds and driving at full throttle until the engine has reached its operating temperature.

! **NOTE** Damage to the catalytic converter due to non-combusted fuel

The engine is not running smoothly and is misfiring.

Non-combusted fuel may get into the catalytic converter.

- Only depress the accelerator pedal slightly.
- Have the cause rectified immediately at a qualified specialist workshop.

Plug-in hybrid: observe the notes in the Supplement. You could otherwise fail to recognise dangers.

Notes on driving on salt-treated roads

The braking effect is limited on salt-treated roads.

Therefore, observe the following notes:

- due to salt build-up on the brake disks and brakepads, the braking distance can increase considerably or result in braking only on one side

- maintain a much greater safe distance to the vehicle in front

To remove salt build-up:

- brake occasionally while paying attention to the traffic conditions
- carefully depress the brake pedal at the end of the journey and when starting the next journey

Notes on aquaplaning

Aquaplaning can take place once a certain amount of water has accumulated on the road surface.

Observe the following notes during heavy precipitation or in conditions in which aquaplaning may occur:

- reduce speed
- avoid tyre ruts
- avoid sudden steering movements
- brake carefully

ⓘ Also observe the notes on regularly checking wheels and tyres (→ page 493).

Notes on driving through water on the road surface

Water which has entered into the vehicle can damage the engine, electrics and transmission.

Water can also enter the air intake of the engine and cause engine damage.

Observe the following if you must drive through water:

- the water, when calm, may only reach the lower edge of the vehicle body
- drive at walking pace at most, otherwise water can enter the vehicle interior or engine compartment
- vehicles travelling in front, or oncoming vehicles, can create waves which may exceed the maximum permissible height of the water

The braking effect of the brakes is reduced after fording. Brake carefully while paying attention to the traffic conditions until braking power has been fully restored.

ECO start/stop function

Operation of the ECO start/stop function

Mercedes-AMG vehicles: observe the notes in the Supplement. You could otherwise fail to recognise dangers.

The engine is switched off automatically in the following situations if all vehicle conditions for an automatic engine stop are met:

- **vehicles with manual transmission:** you brake the vehicle, shift into neutral N when travelling at a low speed and then release the clutch pedal.
- **vehicles with automatic transmission:** you brake the vehicle to a standstill in transmission position D or N.

Vehicles with automatic transmission:

if you switch on the HOLD function in transmission position D or N, the engine will automatically stop in the following situations:

- you stop behind a vehicle that is pulling away.
- you stop at a stop sign when there is no vehicle in front of you.

- you turn the steering wheel hard at a low speed.

ⓘ In transmission position R, the engine is not switched off automatically even when the HOLD function is switched on.

The engine is restarted automatically if:

- **vehicles with automatic transmission:** in transmission position D, you release the brake pedal when the HOLD function is not active.
- **vehicles with automatic transmission:** you shift into transmission position D or R.
- you depress the accelerator pedal.
- an automatic engine start is required by the vehicle.

ECO start/stop function symbols in the multifunction display:

- the symbol Ⓐ (green) appears when the vehicle is at a standstill: the engine was switched off by the ECO start/stop function.
- the symbol Ⓐ (yellow) appears when the vehicle is at a standstill: not all vehicle conditions for an engine stop have been met.
- neither the symbol Ⓐ nor Ⓐ appears when the vehicle is at a standstill: an intelligent stop inhibitor was detected, e.g. a stop sign.
- the symbol Ⓐ **OFF** appears: the ECO start/stop function is deactivated or there is a malfunction.

ⓘ If, in spite of an intelligent stop inhibitor, the engine should be switched off by the ECO start/stop function, you have the following options:

- switch on the HOLD function in transmission position D or N.
- you engage transmission position P.

If the engine was switched off by the ECO start/stop function and you leave the vehicle, a warning tone sounds and the engine is not restarted. The display message Vehicle is operational Switch off ignition before exitingalso appears in the multifunction display. If you do not switch off the ignition, the ignition is automatically switched off after three minutes.

Deactivating or activating the ECO start/stop function

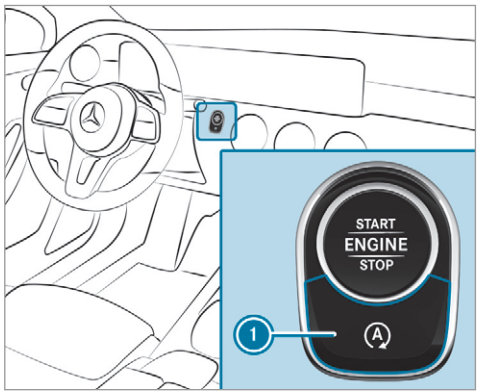

▶ Press button 1.
A display appears in the instrument cluster when switching the ECO start/stop function off/on.

ⓘ A continuous display appears in the instrument cluster while the ECO start/stop function is deactivated.

ECO display function

The ECO display summarises your driving characteristics from the start of the journey to its completion and assists you in achieving the most economical driving style.

You can influence consumption if you:

- drive with particular care
- **Vehicles with automatic transmission:** drive in drive program E.
- **Vehicles with manual transmission:** drive in drive program C.
- observe the gearshift recommendations

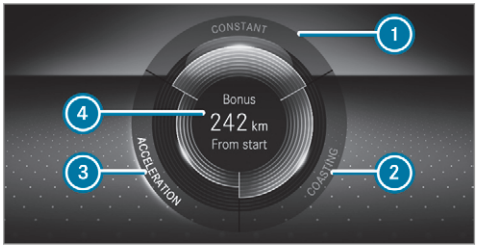

The lettering in the segment will light up brightly, the outer edge will light up and the segment will fill up when the following driving style is adopted:

- ① Steady speed
- ② Gentle deceleration and rolling
- ③ Moderate acceleration

The lettering in the segment will be grey, the outer edge will be dark and the segment will empty when the following driving style is adopted:

- ① Fluctuations in speed
- ② Heavy braking
- ③ Sporty acceleration

The ECO display will show you when you have driven economically:

- The three segments will fill up completely at the same time
- The edge around all three segments will light up

The additional range achieved as a result of your driving style in comparison with a driver with a very sporty driving style will be shown in the centre of the display ④. The range displayed does not indicate a fixed reduction in consumption.

DYNAMIC SELECT switch

Function of the DYNAMIC SELECT switch

Plug-in hybrid: observe the notes in the Supplement. You could otherwise fail to recognise dangers.

Mercedes-AMG vehicles: observe the notes in the Supplement. You could otherwise fail to recognise dangers.

Use the DYNAMIC SELECT switch to change between the following drive programs:

- I* **(Individual):** individual settings
- S **(Sport):** sporty driving style
- C **(Comfort):** comfortable and economical driving style
- E **(Eco):** particularly economical driving style (vehicles with automatic transmission)

ⓘ The drive program selected appears in the multifunction display of the on-board computer.

Depending on the drive program, the following systems change their characteristics:

- drive
  - engine and transmission management
  - Active Distance Assist DISTRONIC
- ESP®
- **vehicles with adaptive damping adjustment:** suspension
- electric power steering

Selecting the drive program

ⓘ Depending on the equipment, the vehicle is fitted with either a switch or a button.

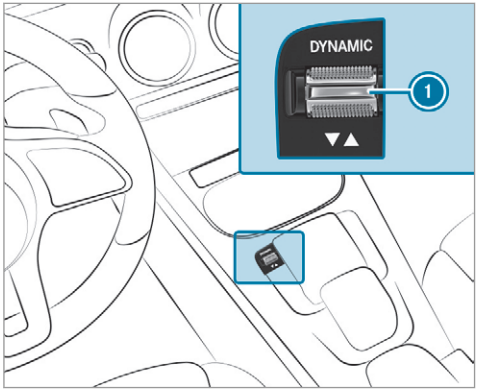

▶ Press DYNAMIC SELECT switch (1) forwards or backwards.
The drive program selected appears in the multifunction display.

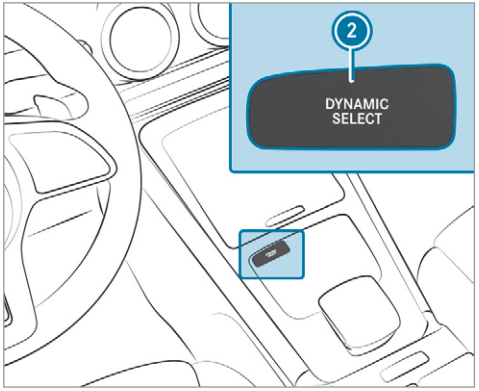

▶ Press DYNAMIC SELECT button (2).
The DYNAMIC SELECT menu appears in the multifunction display.

▶ Press DYNAMIC SELECT button (2) again.
The chosen drive program appears.

Configuring DYNAMIC SELECT (multimedia system)

Multimedia system:

→ ⌂ ⏩ Settings ⏩ Vehicle ⏩ DYNAMIC SELECT

Setting drive program I

- ▶ Select Individual config..
- ▶ Select and set a category.

Switching the reset display on/off

- ▶ Switch Ask when starting on or off.

Function on: the next time the vehicle is started a prompt appears asking whether the last active drive program should be restored. If the ECO start/stop function was deactivated, an additional prompt appears asking if the function should remain deactivated.

ⓘ The prompt appears only if the previously active settings deviate from the standard settings.

Function off: the next time the vehicle is started the C drive program is set automatically. The ECO start/stop function is activated automatically.

ⓘ This function must be activated for each user profile separately. Only when this function is activated will the drive program and Eco start/stop setting for the previous journey be saved for the respective user profile.

Displaying vehicle data

Multimedia system:

→ ⌂ ⏩ Info

- ▶ Select Vehicle.
  The vehicle data is displayed.

Displaying engine data

Multimedia system:

→ ⌂ ⏩ Info

- ▶ Select Engine.
  The engine data is displayed.

ⓘ The actual (maximum) values that can be achieved for engine output and engine torque may deviate from the certified values within the country-specific guidelines for permissible tolerances (basis: UN-ECE No. 85 or country-specific guidelines).

Factors that can influence this are, for example:

- Sea level
- Fuel grade
- Outside temperature

ⓘ The values displayed serve only as orientation. The values for engine output and engine torque shown in the media display may deviate from the actual values.

Calling up fuel consumption indicator

Multimedia system:

→ ⌂ ⏩ Info

- ▶ Select Consumption.
  The current and average fuel consumption is displayed.

Manual transmission

Operating the gearshift lever

WARNING Risk of accident and injury due to children left unattended in the vehicle

If children are left unattended in the vehicle, they could:

- Open doors, thereby endangering other persons or road users.
- Get out and be struck by oncoming traffic.
- Operate vehicle equipment and become trapped, for example.

In addition, the children could also set the vehicle in motion, for example by:

- Releasing the parking brake.
- Changing the transmission position.
- Starting the vehicle.

▶ Never leave children unattended in the vehicle.

▶ When leaving the vehicle, always take the key with you and lock the vehicle.

▶ Keep the vehicle key out of reach of children.

This also applies to the Digital Vehicle Key if the "Digital Vehicle Key" function is activated via Mercedes me connect.

NOTE Damage to the engine and transmission by shifting to a gear that is too low

▶ When changing between gears 5 and 6 push the gearshift lever to the right.

▶ Do not shift down at high speeds.

NOTE Damage of the coupling due to improper use

Holding the vehicle on inclines with a slipping clutch can damage it.

▶ Do not allow the clutch to slip in order to hold the vehicle on inclines.

NOTE Damage to the transmission by shifting to reverse gear R while the vehicle is in motion

▶ Only shift into reverse gear R when the vehicle is stationary.

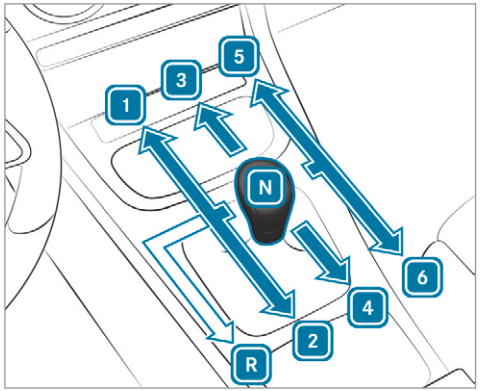

R Reverse gear
1 - 6 Forward gears
N Neutral

▶ **Engaging forward gears 1 - 6 or neutral N :**
- depress the clutch pedal completely.
- turn the gearshift lever to the desired position.

▶ **Engaging reverse gear R :**
- depress the clutch pedal completely.
- pull the gearshift lever up, push it to the left and then pull it back.

Gearshift recommendation

The gearshift recommendation assists you in adopting an economical driving style.

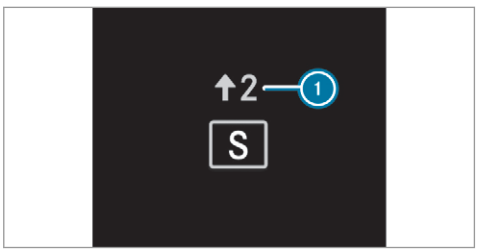

▶ If gearshift recommendation message (1) appears on the multifunction display, shift to the recommended gear.

Automatic transmission

DIRECT SELECT lever

Function of the DIRECT SELECT lever

WARNING Risk of accident due to incorrect gearshifting

If the engine speed is higher than the idle speed and you engage the transmission position D or R, the vehicle may accelerate sharply.

▶ If you engage the transmission position D or R when the vehicle is at a standstill, always depress the brake pedal firmly and do not accelerate at the same time.

WARNING Risk of accident and injury due to children left unattended in the vehicle

If children are left unattended in the vehicle, they could:

- Open doors, thereby endangering other persons or road users.
- Get out and be struck by oncoming traffic.
- Operate vehicle equipment and become trapped, for example.

In addition, the children could also set the vehicle in motion, for example by:

- Releasing the parking brake.
- Changing the transmission position.
- Starting the vehicle.

▶ Never leave children unattended in the vehicle.

▶ When leaving the vehicle, always take the key with you and lock the vehicle.

▶ Keep the vehicle key out of reach of children.

This also applies to the Digital Vehicle Key if the "Digital Vehicle Key" function is activated via Mercedes me connect.

Use the DIRECT SELECT lever to shift the transmission position. The current transmission position is displayed in the multifunction display.

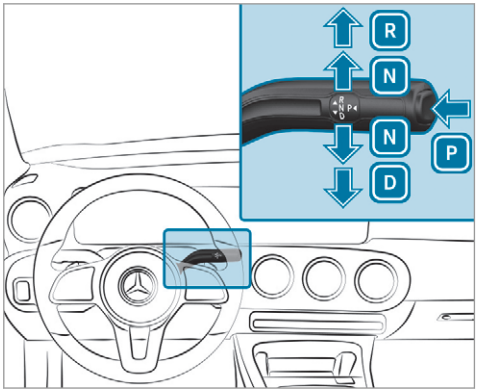

P Park position
R Reverse gear
N Neutral
D Drive position

Engaging reverse gear R

- Depress the brake pedal and push the DIRECT SELECT lever upwards past the first point of resistance.
  The transmission position display R is shown in the multifunction display.

Engaging neutral N

- Depress the brake pedal and push the DIRECT SELECT lever up or down to the first point of resistance.
  The transmission position display N is shown in the multifunction display.

Subsequently releasing the brake pedal will allow you to move the vehicle freely, e.g. to push it or tow it away.

Proceed as follows if you want the automatic transmission to remain in neutral N even if the ignition is switched off or the driver's door is opened:

- Start the vehicle.
- Depress the brake pedal and engage neutral N when the car is stationary.
- Release the brake pedal.
- Switch the ignition off.

ⓘ If you then exit the vehicle leaving the key in the vehicle, the automatic transmission remains in neutral N.

Engaging park position P

- Observe the notes on parking the vehicle (→ page 191).
- Depress the brake pedal until the vehicle is stationary.
- When the vehicle is stationary, press button P.
  Park position is only engaged when the transmission position display P is shown in the multifunction display. If no transmission position display P appears, secure the vehicle to prevent it from rolling away.

Park position P is engaged automatically if one of the following conditions is met:

- you switch off the ignition when the vehicle is stationary and the transmission is in position D or R.
- you open the driver's door when the vehicle is stationary or when driving at a very low speed and the transmission is in position D or R.

ⓘ To manoeuvre with an open driver's door, open the driver's door while stationary and engage transmission position D or R again.

ⓘ At very low outside temperatures below approx. -20 °C, you may not be able to shift the transmission from P to another transmission position when the engine is switched off. If this is the case, only change the transmission position while the engine is running.

Engaging drive position D

- Depress the brake pedal and push the DIRECT SELECT lever down past the first point of resistance.
  The transmission position display D is shown in the multifunction display.

When the automatic transmission is in transmission position D, it shifts the gears automatically. This depends, among other things, on the following factors:

- the selected drive program
- the position of the accelerator pedal
- the driving speed

Manual gearshifting

WARNING Risk of skidding and of an accident due to shifting down on slippery road surfaces

If you shift down on slippery road surfaces to increase the engine braking effect, the drive wheels may lose traction.

▶ Do not shift down on slippery road surfaces to increase the engine braking effect.

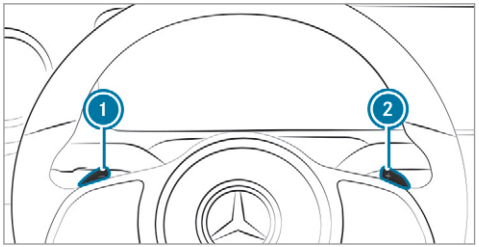

When the automatic transmission is shifted to position D, you can manually shift it with the steering wheel gearshift paddle. If permitted, the automatic transmission shifts to a higher or lower gear depending on the steering wheel gearshift paddle being pulled.

You have two options to manually shift the automatic transmission:

- temporary setting
- permanent setting

The gears shift automatically when manual gearshifting is deactivated.

Temporary setting:

▶ **to activate:** pull steering wheel gearshift paddle 1 or 2.
Manual gearshifting is activated for a short time. Transmission position M and the current gear appear in the multifunction display.

ⓘ How long the manual gearshifting stays activated is dependant on various factors. Manual shifting can be deactivated automatically when changing the drive program, restarting the vehicle when the transmission position is engaged again D or due to the driving style.

▶ **To shift up:** pull steering wheel gearshift paddle 2.

▶ **To shift down:** pull steering wheel gearshift paddle 1.
If you pull and hold the steering wheel gearshift paddle 1, the transmission shifts to the lowest possible gear.

▶ **To deactivate:** pull steering wheel gearshift paddle 2 and hold it in place.
The transmission position D appears in the multifunction display.

Permanent setting:

- change to drive program I* (→ page 175).
- Select drive setting M (→ page 176).

Plug-in hybrid: observe the notes in the Supplement. Otherwise, you may fail to recognise dangers.

Mercedes-AMG vehicles: observe the notes in the Supplement. Otherwise, you may fail to recognise dangers.

Gearshift recommendation

Mercedes-AMG vehicles: observe the notes in the Supplement. Otherwise, you may fail to recognise dangers.

The gearshift recommendation assists you in adopting an economical driving style.

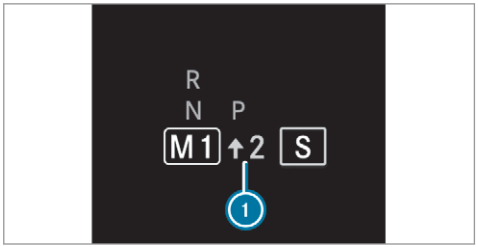

- If gearshift recommendation message 1 is shown on the multifunction display, shift to the recommended gear.

Using kickdown

Mercedes-AMG vehicles: observe the notes in the Supplement. Otherwise, you may fail to recognise dangers.

- **Maximum acceleration:** depress the accelerator pedal beyond the pressure point.

The automatic transmission shifts up to the next gear when the maximum engine speed is reached to protect the engine from overrevving.

Glide mode function

Mercedes-AMG vehicles: observe the notes in the Supplement. Otherwise, you may fail to recognise dangers.

With an anticipatory driving style, Glide mode helps you to reduce fuel consumption.

Glide mode is characterised by the following:

- the combustion engine is disconnected from the drivetrain and continues to run in neutral.
- the transmission position D is displayed in green in the multifunction display.

Glide mode is activated if the following conditions are met:

- drive program E is selected.
- the speed is within a suitable range.
- the road's course is suitable, e.g. no steep uphill or downhill inclines or tight bends.
- there is no trailer coupled to the trailer hitch, and no bicycle rack fitted.
- you do not depress the accelerator or brake pedal (except for light brake applications).

ⓘ Glide mode can also be activated if you have selected the "Eco" setting for the drive in the drive program [ECO].

Glide mode is deactivated again if one of the conditions is no longer met.

Vehicles with Active Distance Assist DISTRONIC: when Active Distance Assist DISTRONIC is active, the glide mode function is not available.

Glide mode can also be prevented by the following parameters:

- Incline
- Downhill gradient
- temperature
- height
- Speed
- operating status of the engine
- traffic situation

ⓘ Glide mode can be ended by pressing a steering wheel gearshift paddle (→ page 181).

Problems with the transmission

Problem	Possible causes/consequences and ▶ Solutions
The transmission has a faulty gear shift.	The transmission is losing oil. ▶ Have the transmission checked at a qualified specialist workshop immediately.
The acceleration characteristics are deteriorating. The transmission no longer shifts gear.	The transmission is in emergency operation mode. ▶ Pull over and stop the vehicle, paying attention to road and traffic conditions. ▶ Switch the transmission to position P. ▶ Switch off the engine. ▶ Wait at least ten seconds before restarting the engine. ▶ Switch the transmission to position D. ▶ Have the transmission checked at a qualified specialist workshop immediately.

Function of the 4MATIC

4MATIC ensures that all four wheels are driven when needed. Together with ESP® and 4ETS, 4MATIC improves the traction of your vehicle whenever a driven wheel spins due to insufficient traction.

If you fail to adapt your driving style, 4MATIC can neither reduce the risk of an accident nor override the laws of physics. 4MATIC cannot take account of road, weather and traffic conditions. 4MATIC is only an aid. You are responsible especially for maintaining a safe distance from the vehicle in front, for vehicle speed, for braking in good time and for staying in lane.

ⓘ In wintry road conditions, the maximum effect of 4MATIC can be achieved only if you use winter tyres (M+S tyres), with snow chains if necessary.

Refuelling

Refuelling the vehicle

WARNING Risk of fire or explosion from fuel

Fuels are highly flammable.

- Fire, naked flames, smoking and creation of sparks must be avoided.
- Switch off the ignition and, if available, the stationary heater, before and while refuelling the vehicle.

WARNING Risk of injury from fuels

Fuels are poisonous and hazardous to your health.

- Do not swallow fuel or let it come into contact with skin, eyes or clothing.
- Do not inhale fuel vapour.
- Keep children away from fuel.
- Keep doors and windows closed during the refuelling process.

If you or other people come into contact with fuel, observe the following:

- Immediately rinse fuel off your skin with soap and water.
- If fuel comes into contact with your eyes, immediately rinse them thoroughly with clean water. Seek medical attention immediately.
- If you swallow fuel, seek medical attention immediately. Do not induce vomiting.
- Change immediately out of clothing that has come into contact with fuel.

WARNING Risk of fire and explosion due to electrostatic charge

Electrostatic charge can create sparks and thereby ignite fuel vapours.

- Before you open the fuel filler cap or take hold of the pump nozzle, touch the metallic vehicle body.
  This discharges any electrostatic charge that may have built up.
- Do not get into the vehicle again during the refuelling process.
  Otherwise, electrostatic charge can build up again.

WARNING Risk of fire from fuel mixture

Vehicles with a diesel engine:

If you mix diesel fuel with petrol, the flash point of the fuel mixture is lower than that of pure diesel fuel.

While the engine is running, component parts in the exhaust system may overheat without warning.

- Never refuel using petrol.
- Never mix petrol with diesel fuel.

! NOTE Damage caused by the wrong fuel

Vehicles with a petrol engine:

Even small amounts of the wrong fuel could result in damage to the fuel system, the engine and the emission control system.

- ▶ Only refuel using unleaded, sulphur-free fuel that conforms to European EN 228, or an equivalent specification.
- ▶ The RON requirement is located in the fuel filler flap.

Fuel of this specification may contain up to 10% ethanol. Your vehicle is suitable for use with E10 fuel.

Never refuel using any of the following fuels:

- diesel
- regular petrol with an octane number lower than 91 RON
- petrol with more than 10% ethanol by volume, e.g. E15, E30, E85, E100
- petrol with more than 3% methanol by volume, e.g. M15, M30
- petrol with additives containing metal

If you accidentally refuel with the wrong fuel:

- ▶ Do not switch the ignition on.
- ▶ Consult a qualified specialist workshop.

! NOTE Damage caused by the wrong fuel

Vehicles with a diesel engine:

Even small amounts of the wrong fuel could result in damage to the fuel system, the engine and the emission control system.

- ▶ Only refuel using sulphur-free diesel fuel that conforms to European standard EN 590, or an equivalent specification.
  In countries without sulphur-free diesel fuel, refuel using only low-sulphur diesel fuel with a sulphur content less than 50 ppm.

Never refuel using any of the following fuels:

- petrol
- marine diesel
- heating oil
- pure bio-diesel fuel or vegetable oil
- paraffin or kerosene

If you accidentally refuel with the wrong fuel:

- ▶ Do not switch the ignition on.
- ▶ Consult a qualified specialist workshop.

! NOTE Do not use diesel to refuel vehicles with a petrol engine

If you have accidentally refuelled with the wrong fuel:

- do not switch the ignition on. Otherwise fuel can enter the engine.
  Even small amounts of the wrong fuel could result in damage to the fuel system and the engine. The repair costs are high.

- ▶ Consult a qualified specialist workshop.

▶ Have the fuel tank and fuel lines drained completely.

! **NOTE** Do not use petrol to refuel vehicles with a diesel engine

If you have accidentally refuelled with the wrong fuel:

- do not switch the ignition on. Otherwise, fuel can enter the fuel system.

  Even small amounts of the wrong fuel could result in damage to the fuel system and the engine. The repair costs are high.

▶ Consult a qualified specialist workshop.

▶ Have the fuel tank and fuel lines drained completely.

! **NOTE** Damage to the fuel system caused by overfilled fuel tanks

▶ Only fill the fuel tank until the pump nozzle switches off.

If you have added too much fuel because of a defective filling pump, for instance:

▶ Do not switch the ignition on.

▶ Consult a qualified specialist workshop.

! **NOTE** Fuel may spray out when you remove the fuel pump nozzle

▶ Only fill the fuel tank until the pump nozzle switches off.

Requirements:

Plug-in-hybrid: for vehicles with a petrol engine, observe the notes in the Supplement. Otherwise, you may fail to recognise dangers.

- The vehicle is unlocked (→ page 79).

ⓘ Do not get into the vehicle again during the refuelling process. Otherwise, electrostatic charge could build up again.

Observe the notes on operating fluids (→ page 523).

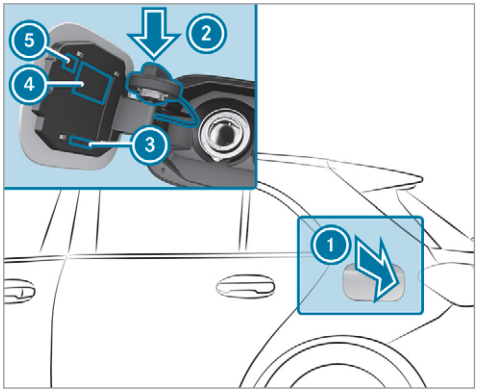

① Fuel filler flap
② Bracket for fuel filler cap
③ Fuel type
④ Tyre pressure table
⑤ QR code for rescue card

▶ Press on the back area of fuel filler flap ①.

▶ Turn the fuel filler cap anti-clockwise and remove it.

- ▶ Insert the fuel filler cap from above into bracket (2).
- ▶ Completely insert the pump nozzle into the tank filler neck, hook in place and refuel.
- ▶ Only fill the fuel tank until the pump nozzle switches off.

ⓘ **Vehicles with a diesel engine:** the tank filler neck is designed for refuelling at diesel filling pumps.

ⓘ **Vehicles with a diesel engine:** when the fuel tank is completely empty, top up with at least 5 litres of diesel.

ⓘ **Vehicles with a diesel engine:** use a filler neck with a large diameter for vehicles with a diesel engine when topping up fuel from a fuel can. Otherwise, the filler neck cannot slide into the tank.

- ▶ Replace the cap on the filler neck and turn clockwise until it engages audibly.
- ▶ Close fuel filler flap (1).

ⓘ Close the fuel filler flap before locking the vehicle.

AdBlue® (vehicles with a diesel engine only)

Notes on refilling AdBlue®

! NOTE Small amounts of ammonia vapour may be released when opening the AdBlue® tank

- ▶ Only fill the AdBlue® tank in well-ventilated areas.
- ▶ Do not let AdBlue® come into contact with skin, eyes or clothes.
- ▶ Keep AdBlue® away from children.

! NOTE Do not ingest AdBlue®

If AdBlue® is swallowed:

- ▶ Immediately rinse out your mouth thoroughly.
- ▶ Drink plenty of water.
- ▶ Seek medical attention immediately.

Observe the notes on operating fluids (→ page 523).

AdBlue® is a water-soluble fluid for the NOx exhaust gas aftertreatment of diesel engines. In order for the exhaust gas aftertreatment to function properly, only use AdBlue® in accordance with ISO 22241.

AdBlue® is characterised by the following:

- non-toxic
- colourless and odourless
- non-flammable

AdBlue® is available here:

- AdBlue® can be topped up by fast service at a qualified specialist workshop, e.g. a Mercedes-Benz Service Centre.
- AdBlue® is available at many filling stations from AdBlue® filling pumps.
- Alternatively, AdBlue® is available at qualified specialist workshops, e.g. Mercedes-Benz Service Centres, and at many filling stations in AdBlue® refill canisters or AdBlue® refill bottles.

ⓘ Ensure the connection between the refill container and vehicle filler neck does not drip.

Topping up AdBlue®

! NOTE Engine damage due to AdBlue® being in the fuel

- ▶ AdBlue® must not be used to fill the fuel tank.
- ▶ Only use AdBlue® to fill the AdBlue® tank.
- ▶ Do not overfill the AdBlue® tank.

! NOTE Contamination of the vehicle interior due to AdBlue® leakage

- ▶ After topping up, carefully close the AdBlue® refill container.
- ▶ Avoid carrying AdBlue® refill containers permanently in the vehicle.

Requirements:

- The vehicle is unlocked.

The following messages appear in order in the multifunction display when the AdBlue® tank requires topping up:

- Refill AdBlue See Owner's ManualThe AdBlue® level has fallen below the reserve range. Top up with at least 5 l of AdBlue®.
- Top up AdBlue Emergency op. in XXX miles See Owner's ManualThe low AdBlue® level will lead to limited performance after the remaining distance displayed has been driven. Top up with at least 5 l of AdBlue®.
- XX,X l Top up AdBlue Emer. op.: max. XXX km/h Start not poss. in XXX kmThe low AdBlue® level will lead to limited performance from the speed displayed. After the remaining distance displayed has been covered, it will no longer be possible to start the engine. Top up with at least the amount of AdBlue® displayed.
- XX,X l Top up AdBlue Switch on ignition, wait 60 sec. or eng. start not poss.. The AdBlue® tank is empty. You can no longer start the engine. Top up with at least the amount of AdBlue® displayed. Switch on the ignition and wait for approximately 60 seconds. Start the engine.

You can see the AdBlue® range and level in the multifunction display (→ page 273).

ⓘ The AdBlue® range shown depends strongly on the driving style and operating conditions. The actual range can therefore deviate from the calculated range.

Opening the AdBlue® filler cap

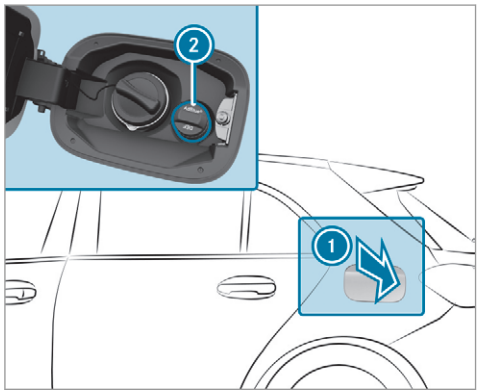

- Press on the back area of fuel filler flap (1).
- Turn AdBlue® filler cap (2) anti-clockwise and remove it.

(i) You can also store the AdBlue® filler cap in the fuel filler cap holder in the fuel filler flap hinge arm.

Preparing the AdBlue® refill canister

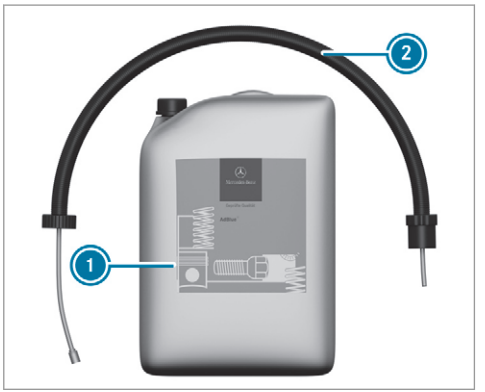

- Screw on the fastener of AdBlue® refill canister (2).
- Screw disposable hose (1) onto the opening of AdBlue® refill canister (2) until hand-tight.

Topping up AdBlue®

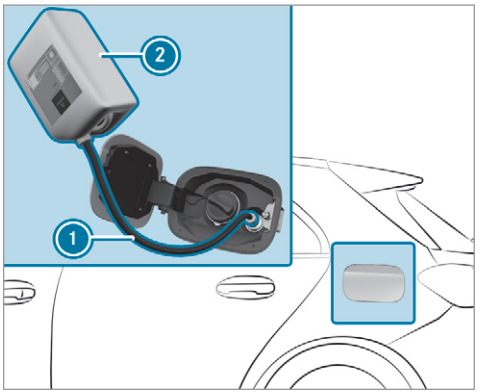

- Screw disposable hose (1) onto the filler neck of the vehicle until hand-tight.
- Lift up and tip AdBlue® refill canister (2). The filling process stops when the AdBlue® tank is completely full.

  AdBlue® refill canister (2) can be removed when it has been only partially emptied.

- Unscrew and close disposable hose (1) and AdBlue® refill canister (2) in reverse order.
- Replace the AdBlue® filler cap and turn it clockwise.
- Close the fuel filler flap.
- Switch on the ignition for at least 60 seconds.

(i) If the vehicle could not be started as the AdBlue® tank was empty, it can take up to 60 seconds for the refill to be detected.

- Start the vehicle.

(i) Avoid storing AdBlue® refill containers permanently in the vehicle.

Parking

Parking the vehicle

⚠ WARNING Risk of accident and injury caused by an insufficiently secured vehicle rolling away.

If the vehicle is not securely parked sufficiently, it can roll away in an uncontrolled way even at a slight downhill gradient.

- Ensure that the parked vehicle is always properly secured against rolling away as follows:
  - on uphill or downhill gradients, turn the front wheels so that the vehicle rolls towards the kerb if it starts moving.
  - apply the parking brake.
  - vehicles with automatic transmission: shift the transmission to position P.
  - vehicles with manual transmission: engage first 1 or reverse gear R.

⚠ WARNING Risk of fire caused by hot exhaust system parts

Flammable material such as leaves, grass or twigs may ignite if they come into contact with hot parts of the exhaust system or exhaust gas flow.

- Park the vehicle so that no flammable material can come into contact with hot vehicle components.
- In particular, do not park on dry grassland or harvested grain fields.

⚠ WARNING Risk of accident and injury due to children left unattended in the vehicle

If children are left unattended in the vehicle, they could:

- Open doors, thereby endangering other persons or road users.
- Get out and be struck by oncoming traffic.

- Operate vehicle equipment and become trapped, for example.

In addition, the children could also set the vehicle in motion, for example by:

- Releasing the parking brake.
- Changing the transmission position.
- Starting the vehicle.

▶ Never leave children unattended in the vehicle.

▶ When leaving the vehicle, always take the key with you and lock the vehicle.

▶ Keep the vehicle key out of reach of children.

This also applies to the Digital Vehicle Key if the "Digital Vehicle Key" function is activated via Mercedes me connect.

! NOTE Damage to the vehicle due to it rolling away

▶ Always secure the vehicle against rolling away.

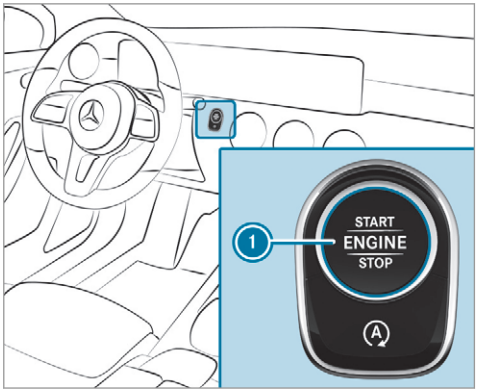

▶ Bring the vehicle to a standstill by applying the brake pedal.

▶ On uphill or downhill gradients, turn the front wheels so that the vehicle rolls towards the kerb if it starts moving.

▶ Apply the electric parking brake.

▶ **Vehicles with manual transmission:** engage first 1 or reverse gear R.

▶ **Vehicles with automatic transmission:** engage transmission position P in a stationary vehicle with the brake pedal applied (→ page 180).

▶ Switch off the engine and the ignition by pressing the 1 button.

▶ Release the service brake slowly.

▶ Get out of the vehicle and lock it.

ⓘ When you park the vehicle, you can still operate the side windows and the panoramic sliding sunroof for approximately five minutes if the driver's door is closed.

Garage door opener

Programming buttons for the garage door opener

⚠ DANGER Risk of death caused by exhaust gases

Combustion engines emit poisonous exhaust gases such as carbon monoxide. Inhaling these exhaust gases is hazardous to health and leads to poisoning.

▶ Never leave the engine or, if present, the auxiliary heating running in an enclosed space without sufficient ventilation.

⚠ **WARNING** Risk of injury when opening or closing a door with the garage door opener

When you operate or program the door with the integrated garage door opener, people in the range of movement of the door may become trapped or struck by the door.

▶ When using the integrated garage door opener, always make sure that nobody is within the range of movement of the door.

Requirements:

- The vehicle has been parked outside the garage or outside the range of movement of the door.
- The engine is switched off.
- The ignition is switched on.

ⓘ The garage door opener function is always available when the ignition is switched on.

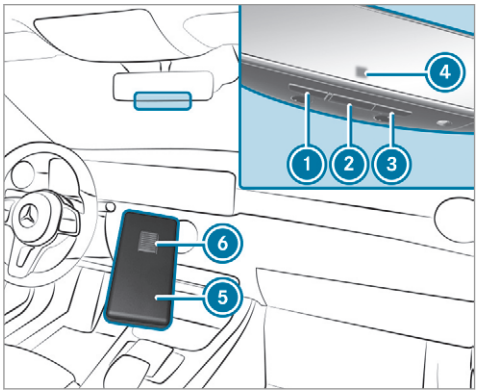

▶ Press and hold button 1, 2 or 3 that you wish to program.
Indicator lamp 4 flashes yellow.

ⓘ It can take up to 20 seconds before the indicator lamp flashes yellow.

▶ Release the previously pressed button.
Indicator lamp 4 continues to flash yellow.

▶ Point remote control 5 from a distance of 1 cm to 8 cm towards button 1, 2 or 3.

▶ Press and hold button 6 of remote control 5 until one of the following signals appears:
- Indicator lamp 4 lights up green continuously. Programming is complete.
- Indicator lamp 4 flashes green. Programming was successful. Additionally, synchronisation of the rolling code with the door system must also be carried out.

▶ If indicator lamp 4 does not light up or flash green: repeat the procedure.

▶ Release all of the buttons.

ⓘ The remote control for the door drive is not included in the scope of delivery of the garage door opener.

Synchronising the rolling code
Requirements:

- The door system uses a rolling code.
- The vehicle must be within range of the garage door or door drive.

- The vehicle as well as persons and objects, are located outside the range of movement of the door.

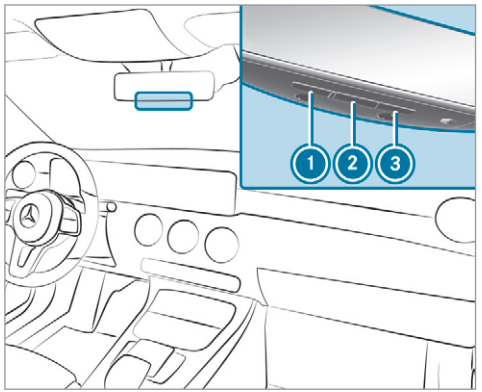

▶ Press the programming button on the door drive unit.
Initiate the next step within approximately 30 seconds.

▶ Press previously programmed button 1, 2 or 3 repeatedly until the door closes. When the door closes, programming is completed.

ⓘ Please also read the operating instructions for the door drive.

Troubleshooting when programming the remote control

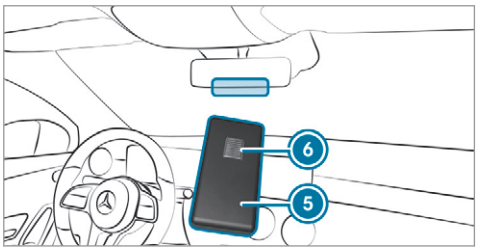

▶ Check if the transmitter frequency of remote control 5 is supported.

▶ Replace the batteries in remote control 5.

▶ Hold remote control 5 at various angles from a distance of 1 cm to 8 cm in front of the inside rearview mirror. You should test every position for at least 25 seconds before trying another position.

▶ Hold remote control 5 at the same angles at various distances in front of the inside rear view mirror. You should test every position for at least 25 seconds before trying another position.

▶ Note that some remote controls transmit only for a limited period, press button 6 on remote control 5 again before transmission ends.

▶ Align the aerial line of the door opener unit with the remote control.

ⓘ Support and additional information on programming:

- On the HomeLink® Hotline on (0) 08000 466 354 65 or +49 (0) 6838 907-277.
- On the Internet at https://www.homelink.com.

Opening or closing the door
Requirements:

- The corresponding button is programmed to operate the door.

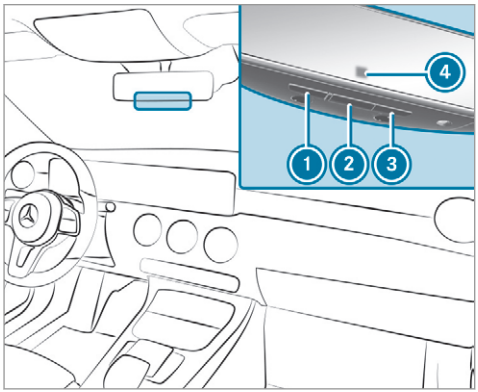

- Press and hold buttons 1, 2 or 3 until the door opens or closes.
- If indicator lamp 4 flashes yellow after approximately 20 seconds: press and hold the previously pressed button again until the door opens or closes.

Clearing the garage door opener memory

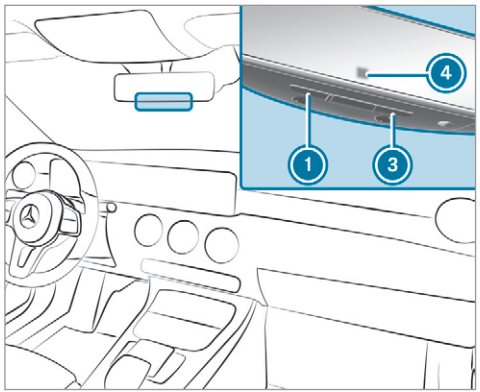

- Press and hold buttons 1 and 3. Indicator lamp 4 lights up yellow.
- If indicator lamp 4 flashes green: release buttons 1 and 3. The entire memory has been deleted.

Radio equipment approval numbers for the garage door opener

Radio equipment approval numbers

ANATEL

1850-16-6324

Brazil

Este equipamento opera em caráter secundário, isto é, não tem direito à proteção contra interferência prejudicial, mesmo de estações do mesmo tipo, e não pode causar interferência a sistemas operando em caráter primário.

Para maiores informações acessar www.anatel.gov.br

Radio equipment approval numbers

Country	Radio equipment approval number
Egypt	TAC.2511151293.WIR
Andorra	CE
Australia	R-NZ
Barbados	MED1578
Chile	2488/DFRS20576/F-74
European Union	CE
Gibraltar	CE
Iceland	CE
Jordan	TRC/LPD/2015/299
Canada	IC: 4112A-MUAHL5
Kuwait	CE
Liechtenstein	CE
Mexico	RCPGEMU15-0448
Monaco	CE
New Zealand	R-NZ
Norway	CE
Russian Federation	Not required
Saudi Arabia	TA 10525
Switzerland	CE
South Africa	 TA-2015/1386
Turkey	Not required
United Arab Emirates	ER41849/15 Dealer No: DA35176/14
United States	FCC ID: NZLMUAHL5

Further information on the declaration of conformity for wireless vehicle components (→ page 25).

Electric parking brake

Electric parking brake function (applying automatically)

⚠ **WARNING** Risk of accident and injury due to children left unattended in the vehicle

If children are left unattended in the vehicle, they could:

- Open doors, thereby endangering other persons or road users.
- Get out and be struck by oncoming traffic.
- Operate vehicle equipment and become trapped, for example.

In addition, the children could also set the vehicle in motion, for example by:

- Releasing the parking brake.
- Changing the transmission position.
- Starting the vehicle.

▶ Never leave children unattended in the vehicle.
▶ When leaving the vehicle, always take the key with you and lock the vehicle.
▶ Keep the vehicle key out of reach of children.

This also applies to the Digital Vehicle Key if the "Digital Vehicle Key" function is activated via Mercedes me connect.

Vehicles with manual transmission:

If you have previously driven at a speed above 3 km/h and the vehicle then comes to a standstill, the electric parking brake is applied if one of the following conditions is fulfilled:

- The engine is switched off.
- The driver's door is opened.

The electric parking brake is also applied while the vehicle is kept stationary by the HOLD function if one of the following conditions is fulfilled:

- The engine is switched off.
- The seat belt tongue is not inserted in the seat belt buckle of the driver's seat and the driver's door is opened.
- There is a system malfunction.
- The power supply is insufficient.
- The vehicle is stationary for a lengthy period.

When the electric parking brake is applied, the red (P) indicator lamp appears in the instrument cluster.

If the electric parking brake is not applied when the driver's door is opened, the Risk of vehicle rolling away Apply parking brake See Owner's Manual message appears.

The electric parking brake is not automatically applied if the engine is switched off by the ECO start/stop function.

ⓘ To prevent application: pull the handle of the electric parking brake.

Vehicles with automatic transmission:

The electric parking brake is applied if the transmission is in position P and one of the following conditions is fulfilled:

- The engine is switched off.
- The seat belt tongue is not inserted in the seat belt buckle of the driver's seat and the driver's door is opened.

ⓘ To prevent application: pull the handle of the electric parking brake.

In the following situations, the electric parking brake is also applied:

- Active Distance Assist DISTRONIC is bringing the vehicle to a standstill.
- The HOLD function is keeping the vehicle stationary.
- Active Parking Assist is keeping the vehicle stationary.

This is the case if one of the following conditions is also fulfilled:

- The engine is switched off.
- The seat belt tongue is not inserted in the seat belt buckle of the driver's seat and the driver's door is opened.
- There is a system malfunction.
- The power supply is insufficient.
- The vehicle is stationary for a lengthy period.

When the electric parking brake is applied, the red Ⓟ indicator lamp appears in the instrument cluster.

The electric parking brake is not automatically applied if the engine is switched off by the ECO start/stop function.

Electric parking brake function (releasing automatically)

The electric parking brake is released when the following conditions are fulfilled:

- The driver's door is closed.
- The engine is running.
- **Vehicles with manual transmission:** a gear has been selected, you release the clutch pedal and depress the accelerator pedal.
- The driver's door is closed.
- You apply the brakes and shift from neutral N into reverse gear R or a forward gear (1 - 6) when on level ground.
- **Vehicles with automatic transmission:** the transmission is in position D or R and you depress the accelerator pedal or you shift from transmission position P to D or R when on level ground with the driver's door closed.
- If the transmission is in position R, the tailgate must be closed.
- The seat belt tongue is inserted into the seat belt buckle of the driver's seat.

Vehicles with automatic transmission: if the seat belt tongue is not inserted into the seat belt buckle of the driver's seat, the following conditions must be fulfilled:

- You shift from transmission position P.
- You have previously driven at speeds greater than 3 km/h

When the electric parking brake is released, the red Ⓟ indicator lamp in the instrument cluster goes out.

Applying/releasing the electric parking brake manually

Applying

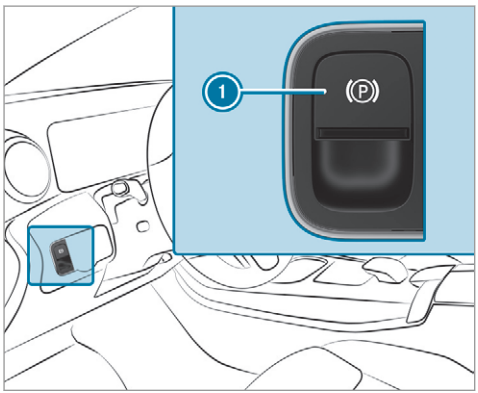

▶ Push handle 1.
The red Ⓟ indicator lamp appears in the instrument cluster.

ⓘ The electric parking brake is only securely applied if the indicator lamp is lit continuously.

Releasing

▶ Switch on the ignition.
▶ Pull handle 1.
The red Ⓟ indicator lamp in the instrument cluster goes out.

Emergency braking

▶ Press and hold handle 1.
As long as the vehicle is driving, the Release parking brake message is displayed.
When the vehicle has been braked to a standstill, the electric parking brake is applied. The red Ⓟ indicator lamp appears in the instrument cluster.

Information on detecting damage on a parked vehicle

If a collision is detected when the tow-away protection is primed on a locked vehicle, you will receive a notification in the multimedia system when you switch on the ignition.

You will receive information about the following points:

- The area of the vehicle that may have been damaged.
- The force of the impact.

The following situations can lead to inadvertent activation:

- The parked vehicle is moved, e.g. in a two-storey garage.

ⓘ Deactivate tow-away protection in order to prevent inadvertent activation. If you deactivate tow-away protection, damage detection will also be deactivated.

System limits

Detection may be restricted in the following situations:

- The vehicle is damaged without impact, e.g. if an outside mirror is torn off or the paint is damaged by a key.
- Impact occurs at low speed.

- The electric parking brake is not applied.

Notes on parking up the vehicle

If you leave the vehicle parked up for longer than six weeks, it may suffer damage through disuse.

The 12 V battery may also be impaired or damaged by heavy discharging.

ⓘ Further information can be obtained at a qualified specialist workshop.

Plug-in hybrid: observe the notes on the high-voltage battery in the Supplement. Otherwise, you may fail to recognise dangers.

Standby mode (extension of the starter battery's period out of use)

Standby mode function

ⓘ This function is not available for all models.

If standby mode is activated, energy loss will be minimised during extended periods of non-operation.

Standby mode is characterised by the following:

- the starter battery is preserved.
- the maximum non-operational time appears in the media display.
- the connection to online services is interrupted.
- the ATA (anti-theft alarm system) is not available.
- the interior protection and tow-away protection functions are not available.
- the function for detecting damage on a parked vehicle is not available.

If the following conditions are fulfilled, standby mode can be activated or deactivated using the multimedia system:

- the engine is switched off.
- the ignition is switched on.

Exceeding the vehicle's displayed non-operational time may cause inconvenience, i.e. it cannot be guaranteed that the starter battery will reliably start the engine.

The starter battery must be charged first in the following situations:

- The vehicle's non-operational time must be extended.
- The Battery charge insufficient for standby mode message appears in the media display.

ⓘ Standby mode is automatically deactivated when the ignition is switched on.

Activating/deactivating standby mode (parking up the vehicle)
Requirements:

- The engine is switched off.

Multimedia system:

↪ ⌂ ▸▸ Settings ▸▸ Vehicle

▶ Switch Standby mode on or off.
When you activate the function, a prompt appears.

▶ Select Yes.
Standby mode is activated.

Driving and driving safety systems

Driving systems and your responsibility

Your vehicle is equipped with driving systems which assist you in driving, parking and manoeuvring the vehicle. The driving systems are aids and do not relieve you of your responsibility pertaining to road traffic law. Pay attention to the traffic conditions at all times and intervene when necessary. Be aware of the limitations regarding the safe use of these systems.

Information on radar and ultrasonic sensors

Some driving and driving safety systems use radar or ultrasonic sensors to monitor the area in front of, behind or next to the vehicle (depending on the vehicle's equipment).

Depending on the vehicle's equipment, the radar sensors are integrated behind the bumpers and/or behind the radiator grille. The ultrasonic sensors are located in the front and rear bumpers. Keep these parts free of dirt, ice and slush (→ page 467). The sensors must not be covered, for example by bicycle racks, overhanging loads, stickers, foil or foils to protect against stone chipping. Additional licence plate brackets can likewise impair the function of the ultrasonic sensors. In the event of damage to the bumpers or radiator grille, or following a collision impacting the bumpers or radiator grille, have the function of the sensors checked at a qualified specialist workshop. If the sensors are damaged, some driving systems and driving safety systems may no longer function properly.

Overview of driving systems and driving safety systems

In this section, you will find information about the following driving systems and driving safety systems:

- 360° Camera (→ page 240)
- ABS (**A**nti-lock **B**raking **S**ystem) (→ page 202)
- Active Distance Assist DISTRONIC (→ page 216)
- Adaptive Brake Lights (→ page 212)
- Active Brake Assist (→ page 206)
- Active Lane Keeping Assist (→ page 258)
- Start-off assist (→ page 230)
- ATTENTION ASSIST (→ page 250)
- BAS (**B**rake **A**ssist **S**ystem) (→ page 202)
- Hill Start Assist (→ page 228)
- Suspension with adaptive damping adjustment (→ page 231)
- EBD (**E**lectronic **B**rakeforce **D**istribution) (→ page 206)
- ESP® (**E**lectronic **S**tability **P**rogram) (→ page 202)
- ESP® Crosswind Assist (→ page 205)
- ESP® trailer stabilisation (→ page 205)
- Speed Limit Assist (→ page 251)
- Active Speed Limit Assist (→ page 220)
- HOLD function (→ page 229)
- STEER CONTROL (→ page 206)
- Active Steering Assist with emergency corridor function (→ page 223)
- Limiter (→ page 213)

- Active Emergency Stop Assist (→ page 226)
- Active Parking Assist (→ page 243)
- Parking Assist PARKTRONIC (→ page 231)
- Reversing camera (→ page 236)
- Active Lane Change Assist (→ page 225)
- Cruise control (→ page 212)
- Blind Spot Assist and Active Blind Spot Assist with exit warning (→ page 255)
- Traffic Sign Assist (→ page 253)

Function of ABS

The Anti-lock Brake System (ABS) regulates the brake pressure in critical driving situations:

- During braking, e.g. at full brake application or insufficient tyre traction, the wheels are prevented from locking.
- Vehicle steerability while braking is ensured.

If ABS intervenes when braking, you will feel a pulsing in the brake pedal. The pulsating brake pedal can be an indication of hazardous road conditions and can serve as a reminder to take extra care while driving.

System limits

- ABS is active from speeds of approx. 8 km/h.
- ABS may be impaired or may not function if a malfunction has occurred and the yellow ABS warning lamp lights up continuously in the instrument cluster after the engine is started.

Function of BAS (Brake Assist System)

WARNING Risk of an accident caused by a malfunction in BAS (Brake Assist System)

If BAS is malfunctioning, the braking distance in an emergency braking situation is increased.

▶ Depress the brake pedal with full force in emergency braking situations. ABS prevents the wheels from locking.

BAS supports your emergency braking situation with additional brake force.

If you depress the brake pedal quickly, BAS is activated:

- BAS automatically boosts the brake pressure.
- BAS can shorten the braking distance.
- ABS prevents the wheels from locking.

The brakes will function as usual once you release the brake pedal. BAS is deactivated.

Functions of ESP® (Electronic Stability Program)

WARNING Risk of skidding if ESP® is malfunctioning

If ESP® is malfunctioning, ESP® cannot carry out vehicle stabilisation. In addition, other driving safety systems are switched off.

▶ Drive on carefully.

▶ Have ESP® checked at a qualified specialist workshop.

⚠ WARNING Risk of skidding if ESP® is deactivated

If you deactivate ESP®, ESP® cannot carry out vehicle stabilisation.

▶ ESP® should only be deactivated in the following situations.

Mercedes-AMG vehicles: be sure to observe the notes in the Supplement. You could otherwise fail to recognise dangers.

ESP® can monitor and improve driving stability and traction in the following situations, within physical limits:

- When pulling away on wet or slippery carriageways.
- When braking.
- **Vehicles with trailer hitch:** in trailer operation from speeds of 65 km/h, if the vehicle/trailer combination begins to sway from side to side.
- In strong side winds when you are driving faster than 75 km/h.

If the vehicle deviates from the direction desired by the driver, ESP® can stabilise the vehicle by intervening in the following ways:

- One or more wheels are braked.
- The engine output is adapted according to the situation.

ESP® is deactivated if the ESP® OFF warning lamp lights up continuously in the instrument cluster.

Observe the following points when ESP® is deactivated:

- Driving stability will no longer be improved.
- **Vehicles with trailer hitch:** stabilisation of the vehicle/trailer combination is no longer active.
- Crosswind Assist is no longer active.
- The drive wheels could spin.
- ETS/4ETS traction control is still active.

ⓘ When ESP® is deactivated, you are still assisted by ESP® when braking.

If the ESP® warning lamp flashes in the instrument cluster, one or several vehicle wheels has reached its grip limit:

- Adapt the driving style to suit the prevailing road and weather conditions.
- Do not deactivate ESP® under any circumstances.
- Only depress the accelerator pedal as far as is necessary.

It may be best to deactivate ESP® in the following situations:

- When using snow chains.
- In deep snow.
- On sand or gravel.

ⓘ Spinning the wheels results in a cutting action, which enhances traction.

If the ESP® warning lamp lights up continuously, ESP® is not available due to a malfunction.

Observe the following information:

- Warning and indicator lamps (→ page 593)
- Display messages (→ page 537)

ETS/4ETS (Electronic Traction System)

ETS/4ETS traction control is part of ESP® and makes it possible to pull away and accelerate on a slippery carriageway.

ETS/4ETS can improve the vehicle's traction by intervening in the following ways:

- The drive wheels are braked individually if they spin.
- More drive torque is transferred to the wheel or wheels with traction.

Influence of drive programs on ESP®

The drive programs enable ESP® to adapt to different weather and road conditions as well as the driver's preferred driving style. You can select the drive programs using the DYNAMIC SELECT switch (→ page 175).

ESP® characteristics per drive program

Drive program	ESP® mode	Characteristics
C (Comfort) E (Economy)	ESP® Comfort	These drive programs provide the ideal balance between traction and stability. Select drive program E or C in difficult road conditions, such as snow or ice, or when the road is wet from rain.
S (Sport)	ESP® Sport	This drive program continues to offer stability but with a sporty setup which allows the enthusiastic driver a more active driving style. Select drive program S in good road conditions, for example on dry roads and clear stretches of road.

Activating/deactivating ESP® (Electronic Stability Program)

Multimedia system:

→ ⌂ ▸▸ Settings ▸▸ Quick access

ⓘ ESP® can only be activated/deactivated using quick access when at least one other function is available in quick access. ESP® can otherwise be found in the Assistance menu.

Mercedes-AMG vehicles: observe the notes in the Supplement. Otherwise, you may fail to recognise dangers.

Plug-in hybrid: observe the notes in the Supplement. Otherwise, you may fail to recognise dangers.

▶ Select ESP.
A prompt appears.

▶ Select On or OFF Off.

ESP® is deactivated if the OFF ESP® OFF warning lamp lights up continuously in the instrument cluster.

Observe the information on warning lamps and display messages which may be shown in the instrument cluster.

Function of ESP® Crosswind Assist

ESP® Crosswind Assist detects sudden gusts of side wind and helps the driver to keep the vehicle in the lane:

- ESP® Crosswind Assist is active at vehicle speeds between approx. 75 km/h and 200 km/h when driving straight ahead or cornering slightly.
- The vehicle is stabilised by means of a targeted and individual brake application on one side.

Function of ESP® trailer stabilisation

⚠ **WARNING** Risk of accident in poor road and weather conditions

In poor road and weather conditions, the trailer stabilisation cannot prevent lurching of the vehicle/trailer combination. Trailers with a high centre of gravity may tip over before ESP® detects this.

▶ Always adapt your driving style to suit the current road and weather conditions.

When driving with a trailer, ESP® can stabilise your vehicle if the trailer begins to swerve from side to side:

- ESP® trailer stabilisation is active above speeds of 65 km/h.
- Slight swerving is reduced by means of a targeted, individual brake application on one side.
- In the event of severe swerving, the engine output is also reduced and all wheels are braked.

ESP® trailer stabilisation may be impaired or may not function if:

- The trailer is not connected correctly or is not detected properly by the vehicle.

Function of EBD (Electronic Brake force Distribution)

EBD is characterised by the following:

- Monitoring and regulating the brake pressure on the rear wheels.
- Improved driving stability when braking, especially on bends.

Function of STEER CONTROL

STEER CONTROL helps you by transmitting a noticeable steering force to the steering wheel in the direction required for vehicle stabilisation.

This steering recommendation is given particularly in the following situations:

- both right wheels or both left wheels are on a wet or slippery road surface when you brake
- the vehicle starts to skid

System limits

STEER CONTROL may be impaired or may not function in the following situations:

- ESP® is deactivated.
- ESP® is malfunctioning.
- The steering is malfunctioning.

If ESP® is malfunctioning, you will be assisted further by the electric power steering.

Function of Active Brake Assist

Active Brake Assist consists of the following functions:

- Distance warning function
- Autonomous braking function
- Situation-dependent braking assistance
- **Vehicles with Driving Assistance Package:** Evasive Steering Assist

Active Brake Assist can help you to minimise the risk of a collision with vehicles, cyclists or pedestrians, or reduce the effects of such a collision.

If Active Brake Assist has detected a risk of collision, a warning tone sounds and the  distance warning lamp lights up in the instrument cluster.

Vehicles with PRE-SAFE®: depending on the country, an additional haptic warning occurs in the form of slight, repeated tensioning of the seat belt.

If you do not react to the warning, autonomous braking can be initiated in critical situations.

In especially critical situations, Active Brake Assist can initiate autonomous braking directly. In this case, the warning lamp and warning tone occur simultaneously with the braking application.

If you apply the brake yourself in a critical situation or apply the brake during autonomous braking, situation-dependent braking assistance occurs. The brake pressure increases up to maximum full-stop braking if necessary.



If autonomous braking or situation-dependent braking assistance has occurred, display 1 appears in the multifunction display and then automatically goes out after a short time.

If the autonomous braking function or the situation-dependent braking assistance is triggered, additional preventive measures for occupant protection (PRE-SAFE®) may also be initiated.

⚠ **WARNING** Risk of an accident caused by limited detection performance of Active Brake Assist

Active Brake Assist cannot always clearly identify objects and complex traffic situations.

In such cases, Active Brake Assist might:

- Give a warning or brake without reason
- Not give a warning or not brake

▶ Always pay careful attention to the traffic situation; do not rely on Active Brake Assist alone. Active Brake Assist is only an aid. The driver is responsible for maintaining a suitable distance to the vehicle in front, vehicle speed and for braking in good time.

▶ Be prepared to brake or swerve if necessary.

ⓘ If the system is unavailable, the OFF display appears in the multifunction display.

Also observe the system limits of Active Brake Assist.

The individual subfunctions are available in the following speed ranges:

The distance warning function issues a warning in the following situations:

- From approximately 30 km/h, if over several seconds the distance maintained to the vehicle travelling in front is too small for the driven speed, the distance warning lamp lights up in the instrument cluster.
- From approximately 7 km/h, if your vehicle is critically close to a vehicle or pedestrian, you will hear an intermittent warning tone and the distance warning lamp lights up in the instrument cluster.

  Vehicles with PRE-SAFE®: depending on the country, an additional haptic warning occurs in the form of slight, repeated tensioning of the seat belt.

Brake immediately or take evasive action, provided it is safe to do so and the traffic situation allows this.

The distance warning function can aid you in the following situations with an intermittent warning tone and a warning lamp:

	Vehicles travelling in front	Stationary vehicles	Crossing vehicles	Moving pedestrians	Stationary pedestrians	Crossing cyclists	Cyclists travelling in front	Stationary cyclists
Vehicles without Driving Assistance Package	Up to approx. 250 km/h	Up to approx. 80 km/h	No reaction	Up to approx. 80 km/h	No reaction	Up to approx. 60 km/h	Up to approx. 80 km/h	No reaction
Vehicles with Driving Assistance Package	Up to approx. 250 km/h	Up to approx. 100 km/h	Up to approx. 70 km/h	Up to approx. 80 km/h	Up to approx. 70 km/h	Up to approx. 70 km/h	Up to approx. 80 km/h	Up to approx. 70 km/h

The autonomous braking function may intervene at speeds starting from approximately 7 km/h in the following situations:

	Vehicles travelling in front	Stationary vehicles	Crossing vehicles	Moving pedestrians	Stationary pedestrians	Crossing cyclists	Cyclists travelling in front	Stationary cyclists
Vehicles without Driving Assistance Package	Up to approx. 200 km/h	Up to approx. 50 km/h	No reaction	Up to approx. 60 km/h	No reaction	Up to approx. 60 km/h	Up to approx. 80 km/h	No reaction
Vehicles with Driving Assistance Package	Up to approx. 250 km/h	Up to approx. 100 km/h	Up to approx. 70 km/h	Up to approx. 70 km/h	Up to approx. 70 km/h	Up to approx. 70 km/h	Up to approx. 80 km/h	Up to approx. 70 km/h

Situation-dependent braking assistance may intervene at speeds starting from approximately 7 km/h in the following situations:

	Vehicles travelling in front	Stationary vehicles	Crossing vehicles	Moving pedestrians	Stationary pedestrians	Crossing cyclists	Cyclists travelling in front	Stationary cyclists
Vehicles without Driving Assistance Package	Up to approx. 250 km/h	Up to approx. 80 km/h	No reaction	Up to approx. 60 km/h	No reaction	Up to approx. 60 km/h	Up to approx. 80 km/h	No reaction
Vehicles with Driving Assistance Package	Up to approx. 250 km/h	Up to approx. 100 km/h	Up to approx. 70 km/h	Up to approx. 70 km/h	Up to approx. 70 km/h	Up to approx. 70 km/h	Up to approx. 80 km/h	Up to approx. 70 km/h

Cancelling a brake application of Active Brake Assist

You can cancel a brake application of Active Brake Assist at any time by:

- Fully depressing the accelerator pedal or with kickdown.
- Releasing the brake pedal.

Active Brake Assist may cancel the brake application when one of the following conditions is fulfilled:

- You manoeuvre to avoid the obstacle.
- There is no longer a risk of collision.
- An obstacle is no longer detected in front of your vehicle.

Evasive Steering Assist (only vehicles with Driving Assistance Package)

Evasive Steering Assist has the following characteristics:

- The ability to detect stationary or moving pedestrians.
- Assistance through power-assisted steering if it detects a swerving manoeuvre.

- Activation by an abrupt steering movement during a swerving manoeuvre.
- Assistance during swerving and straightening of the vehicle.
- Reaction from a speed of approximately 20 km/h up to a speed of approximately 70 km/h.

You can prevent the assistance at any time by actively steering.

⚠ **WARNING** Risk of an accident despite Evasive Steering Assist

Evasive Steering Assist cannot always clearly identify objects and complex traffic situations.

In addition, the steering support of Evasive Steering Assist is generally not sufficient to avoid a collision.

In such cases Evasive Steering Assist can:

- give an unnecessary warning or provide assistance
- not give a warning or not provide assistance

▶ Always pay careful attention to the traffic situation; do not rely on Evasive Steering Assist alone.

▶ Be ready to brake and take evasive action, if necessary.

▶ Prevent the assistance by actively steering in non-critical driving situations.

▶ Drive at an appropriate speed if pedestrians are close to the path of your vehicle.

System limits

Full system performance is not available for a few seconds after switching on the ignition or after driving off.

The system may be impaired or may not function in the following situations:

- In snow, rain, fog, heavy spray, if there is glare, in direct sunlight or in greatly varying light conditions.
- If the sensors are dirty, misted up, damaged or covered.
- If the sensors are impaired due to interference from other radar sources, e.g. strong radar reflections in multi-storey car parks.
- If a loss of tyre pressure or a defective tyre has been detected and displayed.
- In complex traffic situations where objects cannot always be clearly identified.
- If pedestrians or vehicles move quickly into the sensor detection range.
- If pedestrians are hidden by other objects.
- If the typical outline of a pedestrian cannot be distinguished from the background.
- If a pedestrian is not detected as such, e.g. due to special clothing or other objects.
- On bends with a tight radius.

ⓘ The Active Brake Assist sensors adjust automatically while a certain distance is being driven after the vehicle has been delivered. Active Brake Assist is unavailable or only partially available during this teach-in period.

Setting Active Brake Assist

Requirements:

- The ignition is switched on.

Multimedia system:

→ ⌂ ▸▸ Settings ▸▸ Assistance ▸▸ Active Brake Assist

The following settings are available:

- Early
- Medium
- Late

▶ Select a setting.
The setting is retained when the engine is next started.

Deactivating Active Brake Assist

ⓘ It is recommended that you always leave Active Brake Assist activated.

▶ Select Off.
The distance warning function, the autonomous braking function and the Evasive Steering Assist are deactivated.
When the vehicle is next started, the middle setting is automatically selected.

ⓘ If Active Brake Assist is deactivated, the OFF symbol appears in the status bar of the multifunction display.

Function of Adaptive Brake Lights

Adaptive Brake Lights warn following traffic in an emergency braking situation with the following actions:

- By flashing the brake lamps
- By activating the hazard warning lights

If the vehicle is braked sharply from speeds above 50 km/h, the brake lamps flash rapidly. This provides traffic travelling behind you with an even more noticeable warning.

If the vehicle is travelling at speeds of more than 70 km/h at the beginning of the brake application, the hazard warning lights switch on once the vehicle is stationary. When you pull away again, the hazard warning lights will switch off automatically at approximately 10 km/h. You can also switch off the hazard warning lights using the hazard warning button.

Cruise control and limiter

Function of cruise control

Plug-in hybrid: observe the notes in the Supplement. You could otherwise fail to recognise dangers.

Cruise control regulates the speed to the value selected by the driver.

If you accelerate to overtake, for example, the stored speed is not deleted. If you remove your foot from the accelerator pedal after overtaking, cruise control will resume speed regulation back to the stored speed.

Cruise control is operated using the corresponding steering wheel buttons. You can store any speed above 20 km/h up to the maximum speed or up to the set winter tyre limit.

If you fail to adapt your driving style, cruise control can neither reduce the risk of an accident nor override the laws of physics. It cannot take into account road, weather or traffic conditions.

Cruise control is only an aid. The driver is responsible for the distance to the vehicle in front, for vehicle speed, for braking in good time and for staying in lane.

Mercedes-AMG vehicles: cruise control is available up to a maximum speed of 250 km/h.

Displays in the multifunction display

The status of cruise control and the stored speed are shown in the multifunction display.

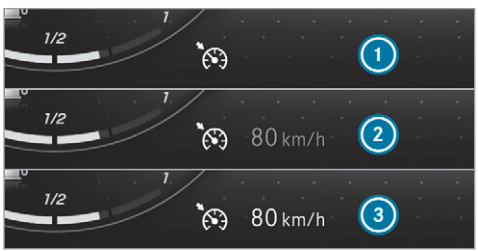

1. Cruise control is selected
2. Speed is saved, cruise control is deactivated
3. Speed is saved, cruise control is activated

ⓘ The segments extending from the current stored speed to the end of the scale, or to the set winter tyre limit, light up in the speedometer.

System limits

Cruise control may be unable to maintain the stored speed on uphill gradients. The stored speed is resumed when the gradient evens out.

Change into a lower gear in good time on long and steep downhill gradients. Take particular note of this when driving a laden vehicle. By doing so, you will make use of the engine's braking effect. This relieves the load on the brake system and prevents the brakes from overheating and wearing too quickly.

Do not use cruise control in the following situations:

- In traffic situations which require frequent changes of speed, e.g. in heavy traffic, on winding roads.
- On slippery roads. Accelerating can cause the drive wheels to lose traction and the vehicle could then skid.
- If you are driving when visibility is poor.

Function of the limiter

Plug-in hybrid: observe the notes in the Supplement. Otherwise, you may fail to recognise dangers.

The limiter restricts the speed of the vehicle. To reduce the speed to the set speed, the limiter applies the brakes automatically.

You can limit the speed as follows:

- Variable: for speed restrictions, e.g. in built-up areas.
- Permanent: for long-term speed restrictions, e.g. when driving in winter tyre mode.

The variable limiter is operated using the corresponding steering wheel buttons. You can store any speed above 20 km/h up to the maximum speed or up to the set winter tyre limit. You can also perform settings while the vehicle is stationary if the vehicle has been started.

If you fail to adapt your driving style, the limiter can neither reduce the risk of an accident nor override the laws of physics. It cannot take into account road, weather or traffic conditions. The limiter is only an aid. The driver is responsible

for the distance to the vehicle in front, for vehicle speed, for braking in good time and for staying in lane.

Mercedes-AMG vehicles: the limiter is available up to a maximum speed of 250 km/h.

Displays on the multifunction display

The status of the variable limiter and the stored speed are shown in the multifunction display.

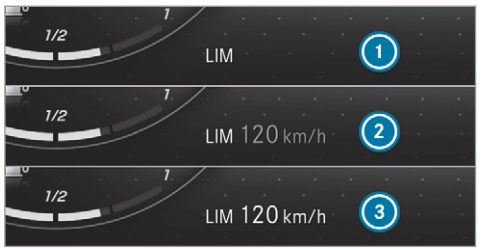

1. Variable limiter is selected
2. Speed is stored, variable limiter is deactivated
3. Speed is stored, variable limiter is activated

ⓘ The segments in the speedometer light up, up to the currently stored speed.
When the driving speed is greater than the stored speed, display 3 flashes.

Kickdown

If you depress the accelerator pedal beyond the pressure point (kickdown), the variable limiter switches to passive mode. The Limiter passive message appears in the multifunction display.

After completion of kickdown, the variable limiter is activated again in the following situations:

- If the driven speed drops below the stored speed.
- If the stored speed is called up.
- If you store a new speed.

Operating cruise control or the variable limiter

⚠ **WARNING** Risk of accident due to stored speed

If you call up the stored speed and this is lower than your current speed, the vehicle decelerates.

▶ Take into account the traffic situation before calling up the stored speed.

Requirements:

Cruise control

- Cruise control is selected.
- ESP® must be activated, but not intervening.
- The driven speed is at least 20 km/h.
- The transmission is in position D.

Variable limiter

- The vehicle has been started.
- The variable limiter is selected.

Switching between cruise control and the variable limiter

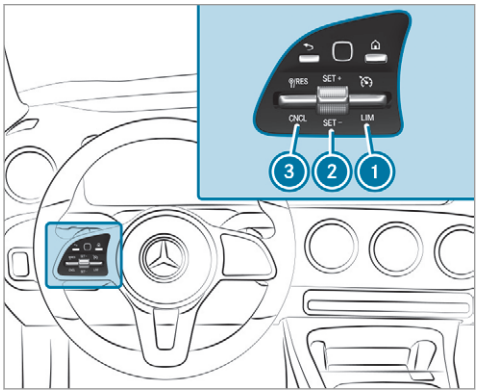

- **To select cruise control:** press rocker switch (1) up.
- **To select the variable limiter:** press rocker switch (1) down.

ⓘ Vehicles with Active Distance Assist DISTRONIC: the variable limiter is selected by a different button (→ page 218).

Activating cruise control or the variable limiter

- Press rocker switch (2) up (SET+) or down (SET-).
  The current driven speed is stored and the vehicle maintains this speed (cruise control) or does not exceed it (limiter).

or

- Press rocker switch (3) up (RES).
  The last stored speed is called up and the vehicle maintains this speed (cruise control) or does not exceed it (variable limiter).

  If the last stored speed has previously been deleted, the currently driven speed is stored.

ⓘ When you switch off the vehicle, the last speed stored is cleared.
When you activate cruise control or Active Distance Assist DISTRONIC, the last speed stored for the variable limiter is cleared.

Increasing/decreasing the stored speed

- Press rocker switch (2) up (SET+) or down (SET-) to the pressure point.
  The stored speed is increased or reduced by 1 km/h.

or

- Press rocker switch (2) up (SET+) or down (SET-) to the pressure point and hold.
  The stored speed is increased or reduced in increments of 1 km/h.

or

- Press rocker switch (2) up (SET+) or down (SET-) beyond the pressure point.
  The stored speed is increased or reduced by 10 km/h.

or

- Press rocker switch (2) up (SET+) or down (SET-) and hold beyond the pressure point.
  The stored speed is increased or reduced in increments of 10 km/h.

or

- Accelerate the vehicle to the desired speed.
- Press rocker switch (2) up (SET+).

Adopting the detected speed

If cruise control/the variable limiter is activated and Speed Limit Assist or Traffic Sign Assist has detected a speed restriction sign with a maximum permissible speed and this is displayed in the instrument cluster, you can choose between the following options:

- Press rocker switch (3) up (RES). The maximum permissible speed shown by the traffic sign is stored and the vehicle maintains or does not exceed this speed.
- **To deactivate cruise control:** press rocker switch (3) down (CNCL).
- **To deactivate cruise control:** press rocker switch (1) down.

Deactivating cruise control or the variable limiter

- Press rocker switch (3) down (CNCL).

ⓘ If you brake, deactivate ESP® or if ESP® intervenes, cruise control is deactivated. The variable limiter is not deactivated.

Permanent limiter

If the vehicle should never exceed a specific speed (e.g. for driving in winter tyre mode), you can set this speed with the permanent limiter.

You do this by limiting the speed to a value between 160 km/h and 240 km/h in the multimedia system (→ page 216).

Shortly before the set speed is reached, it appears in the multifunction display. When you confirm the message with ⮌, display messages no longer appear until you switch off the vehicle. The speed will only be displayed again once the vehicle has been restarted or if the set speed is changed.

The permanent limiter does not switch to passive mode even during kickdown and the driven speed remains below the set speed.

Setting the speed limitation for winter tyres

Multimedia system:

↴ ⌂ » Settings » Vehicle » Winter tyres limit

- Select a speed or deactivate the function.

Active Distance Assist DISTRONIC

Function of Active Distance Assist DISTRONIC

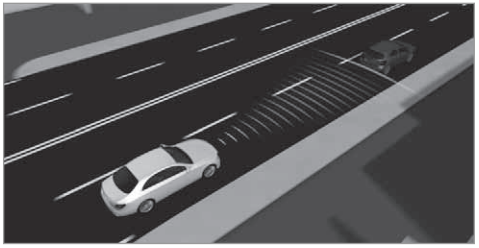

Active Distance Assist DISTRONIC maintains the set speed on free-flowing roads. If vehicles in front are detected, the set distance is maintained, if necessary, until the vehicle comes to a halt. The vehicle accelerates or brakes depending on the distance to the vehicle in front and the set speed. The speed and distance to the vehicle in front are set and saved on the steering wheel on vehicles without the Driving Assistance Package, in the range between 20 km/h and 200 km/h and, on vehicles with the Driving

Assistance Package, in the range between 20 km/h and 210 km/h.

The adjustable set speed can vary due to the following factors:

- **Plug-in hybrid:** drive program selected, observe the relevant notes in the Supplement
- Maximum speed, e.g. winter tyre limit (→ page 216)

Other features of Active Distance Assist DISTRONIC:

- Adjusts the driving style depending on the selected drive program (fuel efficient, comfortable or dynamic) (→ page 174)
- **Vehicles with Driving Assistance Package:** reacts to stationary vehicles detected in urban speed ranges (except bicycles and motorcycles)
- Initiates acceleration to the stored speed if the turn signal indicator is switched on to change to the overtaking lane
- **Vehicles with Driving Assistance Package:** takes one-sided overtaking restrictions into account on motorways or on multi-lane roads with separate carriageways (country-dependent)

Vehicles with Active Parking Assist and Driving Assistance Package: if the vehicle has been braked to a standstill on multi-lane, separate carriageways by Active Distance Assist DISTRONIC, it can automatically follow the vehicle in front driving off again within 30 seconds. If a critical situation is detected when driving off, a visual and acoustic warning is given indicating that the driver must now take control of the vehicle. The vehicle is not accelerated any further.

Active Distance Assist DISTRONIC is only an aid. The driver is responsible for keeping a safe distance to the vehicle in front, for vehicle speed and for braking in good time.

System limits

The system may be impaired or may not function in the following situations:

- In snow, rain, fog, heavy spray, if there is glare, in direct sunlight or in greatly varying light conditions.
- The windscreen in the area of the camera is dirty, misted up, damaged or covered.
- If the radar sensors are dirty or covered.
- In multi-storey car parks or on roads with steep uphill or downhill gradients.
- If there are narrow vehicles in front, such as bicycles or motorcycles.

In addition, on slippery roads, braking or accelerating can cause one or several wheels to lose traction and the vehicle could then skid.

Do not use Active Distance Assist DISTRONIC in these situations.

⚠ **WARNING** Risk of accident from acceleration or braking by Active Distance Assist DISTRONIC

Active Distance Assist DISTRONIC may accelerate or brake in the following cases, for example:

- If the vehicle pulls away using Active Distance Assist DISTRONIC.

- If the stored speed is called up and is considerably faster or slower than the currently driven speed.
- If Active Distance Assist DISTRONIC no longer detects a vehicle in front or does not react to relevant objects.

▶ Always carefully observe the traffic conditions and be ready to brake at all times.

▶ Take into account the traffic situation before calling up the stored speed.

⚠ **WARNING** Risk of accident due to insufficient deceleration by Active Distance Assist DISTRONIC

Active Distance Assist DISTRONIC brakes your vehicle with up to 50 % of the maximum possible deceleration. If this deceleration is not sufficient, Active Distance Assist DISTRONIC alerts you with a visual and acoustic warning.

▶ In these cases, adjust your speed and keep a sufficient distance.

▶ Brake the vehicle yourself and/or take evasive action.

⚠ **WARNING** Risk of accident if detection function of Active Distance Assist DISTRONIC is impaired

Active Distance Assist DISTRONIC does not react or has a limited reaction:

- when driving on a different lane or when changing lanes
- to pedestrians, animals, bicycles or stationary vehicles, or unexpected obstacles
- to complex traffic conditions
- to oncoming vehicles and crossing traffic

As a result, Active Distance Assist DISTRONIC may neither give warnings nor intervene in such situations.

▶ Always observe the traffic conditions carefully and react accordingly.

Operating Active Distance Assist DISTRONIC
Requirements:

- The vehicle has been started.
- The electric parking brake is released.
- ESP® is activated and is not intervening.
- The transmission is in position D.
- The driver's door is closed.
- Check of the radar sensor system has been successfully completed.
- Parking Assist PARKTRONIC is not being used to park the vehicle or to exit from a parking space.
- The vehicle does not skid.

Switching between Active Distance Assist DISTRONIC and the limiter

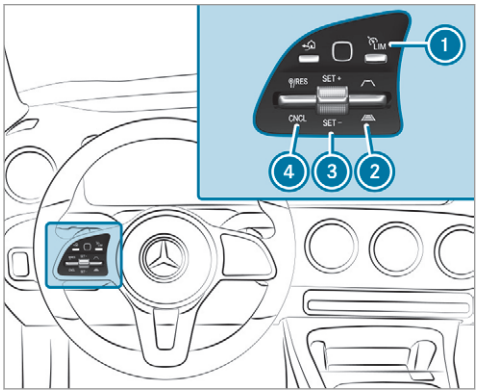

▶ Press button 1.

Activating the variable limiter or Active Distance Assist DISTRONIC

▶ **To activate without a stored speed:** press rocker switch 3 up (SET+) or down (SET-), or press rocker switch 4 up (RES). Remove your foot from the accelerator pedal (Active Distance Assist DISTRONIC).
The current driven speed is stored and maintained (Active Distance Assist DISTRONIC) or limited (variable limiter) by the vehicle.

or

▶ **To activate with a stored speed:** press rocker switch 4 up (RES). Remove your foot from the accelerator pedal (Active Distance Assist DISTRONIC).

ⓘ By pressing rocker switch 4 up again, the speed limitation shown in the instrument cluster will be adopted by Active Distance Assist DISTRONIC or variable limiter.

Accepting the displayed speed restriction when Distance Assist DISTRONIC or the limiter is activated

▶ Press rocker switch 4 up (RES).
The speed limit displayed in the instrument cluster is adopted as the stored speed. The vehicle adapts its speed to that of the vehicle in front, but only up to the stored speed.

Pulling away with Active Distance Assist DISTRONIC

▶ Remove your foot from the brake pedal and activate Active Distance Assist DISTRONIC.
▶ Press rocker switch 4 up (RES).

or

▶ Depress the accelerator pedal briefly and firmly.
The functions of Active Distance Assist DISTRONIC continue to be carried out.

Deactivating Active Distance Assist DISTRONIC

⚠ **WARNING** Risk of accident due to Active Distance Assist DISTRONIC still being activated when you leave the driver's seat

If you leave the driver's seat while the vehicle is being braked by Active Distance Assist DISTRONIC only, the vehicle can roll away.

▶ Always deactivate Active Distance Assist DISTRONIC and secure the vehi-

cle to prevent it from rolling away before you leave the driver's seat.

▶ Press rocker switch 4 down (CNCL).

ⓘ If you brake, deactivate ESP® or if ESP® intervenes, Active Distance Assist DISTRONIC is deactivated.

Increasing or reducing the speed

▶ Press rocker switch 3 up (SET+) or down (SET-) to the pressure point.
The stored speed is increased or reduced by 1 km/h.

or

▶ Press rocker switch 3 up (SET+) or down (SET-) to the pressure point and hold.
The stored speed is increased or reduced in increments of 1 km/h.

or

▶ Press rocker switch 3 up (SET+) or down (SET-) beyond the pressure point.
The stored speed is increased or reduced by 10 km/h.

or

▶ Press rocker switch 3 up (SET+) or down (SET-) and hold beyond the pressure point.
The stored speed is increased or reduced in increments of 10 km/h.

Reducing or increasing the specified distance from the vehicle in front

▶ Press rocker switch 2 up or down.

Function of Active Speed Limit Assist

ⓘ The following function is country-dependent and only available in conjunction with the Driving Assistance Package.

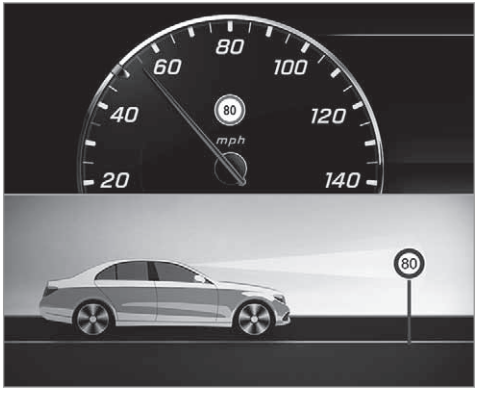

If a change in the speed limit is detected and automatic adoption of speed limits is activated, the new speed is automatically adopted as the stored speed (→ page 255).

The driven speed is adjusted when the vehicle is level with the traffic sign at the latest. In the case of signs indicating entry into an urban area, the speed is adapted according to the speed permitted within the urban area. The speed limit

display in the Instrument Display is always updated when the vehicle is level with the traffic sign.

If there is no speed restriction on an unlimited stretch of road (e.g. on a motorway), the recommended speed is automatically adopted as the stored speed. The system uses the speed stored on an unlimited stretch of road as the recommended speed. If you do not alter the stored speed on an unlimited stretch of road, the recommended speed is 130 km/h.

If Active Distance Assist DISTRONIC has been put into passive mode by pressing the accelerator pedal, only speed limits which are higher than the set speed are adopted.

Active Speed Limit Assist is only an aid. The driver is responsible for keeping a safe distance from the vehicle in front, for vehicle speed and for braking in good time. The maximum permissible speed also depends on factors such as the road surface and traffic conditions.

System limits

Temporary speed restrictions (e.g. for a certain time or due to weather conditions) cannot be properly detected by the system. The maximum permissible speed applying to a vehicle with a trailer is not detected by the system. In these situations you must adjust your speed yourself.

⚠ **WARNING** Risk of accident due to Active Speed Limit Assist adapting the vehicle's speed

The speed adopted by Active Speed Limit Assist may be too high or incorrect in some individual cases, such as:

- In the wet or in fog
- When towing a trailer

▶ Ensure that the driven speed complies with traffic regulations.

▶ Adjust the driving speed to suit current traffic and weather conditions.

Function of route-based speed adaptation

ⓘ The following function is country-dependent and only available in conjunction with the Driving Assistance Package.

When Active Distance Assist DISTRONIC is activated, the vehicle speed will be adjusted accordingly to the route events ahead. Depending on the drive program selected, the vehicle negotiates a route event ahead in a fuel-saving, comfortable or dynamic manner. When the route event has been passed, the vehicle accelerates again to the stored speed. The set distance to the vehicle in front, vehicles detected ahead and speed restrictions ahead are taken into account.

Route-based speed adaptation can be configured in the multimedia system (→ page 222).

The following route events are taken into account:

- Bends
- T-junctions, roundabouts and toll stations
- Turns and exits

ⓘ When the toll station is reached, Active Distance Assist DISTRONIC adopts the speed as the stored speed.

Also, the speed is reduced if the turn signal indicator to change lanes is switched on and one of the following situations is detected:

- Turning off at junctions
- Driving on slowing-down lanes
- Driving on lanes adjacent to slowing-down lanes

The driver is responsible for choosing the right speed and observing other road users. This applies in particular to junctions, roundabouts and traffic lights, as route-based speed adaptation does not brake the vehicle to a standstill.

When route guidance is active, the first speed adjustment is carried out automatically. If the turn signal indicator is switched on, the selected route is confirmed and further speed adjustment is activated.

Speed adjustment is cancelled in the following cases:

- If the turn signal indicator is switched off before the route event.
- If the driver depresses the accelerator or brake pedal during the process.

System limits

Route-based speed adaptation does not take right of way regulations into account. The driver is responsible for complying with road traffic regulations and driving at a suitable speed.

In difficult conditions, for example unclear roads, lane narrowing, wet road surfaces, snow or ice, or when driving with a trailer, the speed adjustment made by the system may not always be suitable. In these situations the driver must intervene accordingly.

⚠ **WARNING** Risk of accident in spite of route-based speed adjustment

Route-based speed adjustment might malfunction or be temporarily unavailable in the following situations:

- If the driver does not follow the calculated route
- If map data is not up to date or available
- In road construction areas
- In bad weather or road conditions
- If the accelerator pedal is depressed
- In the event of electronically displayed speed limitations

▶ Adjust the speed to the traffic situation.

Setting route-based speed adaptation

Requirements:

- Active Distance Assist DISTRONIC is activated.

Multimedia system:

→ ⌂ ▸▸ Settings ▸▸ Assistance ▸▸ Route-based speed adapt.

▶ Activate or deactivate the function. When the function is active, the vehicle speed is adjusted depending on the route events ahead.

ⓘ Further information on the route-based speed adaptation (⟶ page 221).

Active Steering Assist

Function of Active Steering Assist

ⓘ The following function is country-dependent and only available in conjunction with the Driving Assistance Package.

Active Steering Assist is only available up to a speed of 210 km/h. The system helps you to stay in the centre of the lane by means of moderate steering interventions. Depending on the speed driven, Active Steering Assist uses the vehicles ahead and lane markings as a reference.

ⓘ Depending on the country, in the lower speed range Active Steering Assist can use the surrounding traffic as a reference. If necessary, Active Steering Assist can then also provide assistance when driving outside the centre of the lane to form a rescue lane, for example.

When the system is actively steering, the symbol is shown in green in the multifunction display.

If the detection of lane markings and vehicles ahead is impaired, Active Steering Assist switches to passive mode. The system provides no support in this case. During the transition from active to passive status, the symbol is shown as enlarged and flashing. Once the system is passive, the symbol is shown as grey in the multifunction display.

Steering and touch detection

The driver is required to keep their hands on the steering wheel at all times and be able to intervene at any time to correct the course of the vehicle and keep it in lane. The driver must expect a change from active to passive mode or vice versa at any time.



If the system detects that the driver has not steered the vehicle for a considerable period of time or has removed their hands from the steering wheel, an optical warning is given first. Display 1 appears in the multifunction display. If the driver still does not steer the vehicle, or gives no confirmation to the system, a warning tone sounds in addition to the visual warning message.

The warning is not issued, or is stopped, when the driver gives confirmation to the system:

- The driver steers the vehicle.
- The driver presses a steering wheel button or operates Touch Control.

If Active Steering Assist detects that a system limit has been reached, a visual warning is issued and a warning tone sounds.

Active Steering Assist is only an aid. The driver is responsible for the distance to the vehicle in front, for vehicle speed, for braking in good time and for staying in lane. Before changing lanes, the driver must make sure that the neighbouring lane is free (glance over the shoulder).

System limits
Active Steering Assist has a limited steering torque for lateral guidance. In some cases, the steering intervention is not sufficient to keep the vehicle in the lane or to drive through exits.

The system may be impaired or may not function in the following instances:

- There is poor visibility, e.g. due to snow, rain, fog, heavy spray, greatly varying light conditions or strong shadows on the carriageway.
- There is glare, e.g. from oncoming traffic, direct sunlight or reflections.
- Insufficient road illumination.
- The windscreen is dirty, misted up, damaged or covered in the vicinity of the camera, e.g. by a sticker.
- No, or several, unclear lane markings are present for one lane, or the markings change quickly, e.g. in a construction area or junctions.
- The lane markings are worn away, dark or covered up, e.g. by dirt or snow.
- The distance to the vehicle in front is too small and the lane markings thus cannot be detected.
- The road is narrow and winding.
- There are obstacles on the lane or projecting out into the lane, such as object markers.

The system does not provide assistance in the following conditions:

- On tight bends and when turning.
- When crossing junctions.
- At roundabouts or toll stations.
- When towing a trailer.
- When actively changing lane without switching on the turn signal indicator.
- When the tyre pressure is too low.

Depending on the selected vehicle settings, Active Steering Assist may be unavailable. Observe the status display of Active Steering Assist in the multifunction display (→ page 227).

⚠ WARNING Risk of accident if Active Steering Assist unexpectedly stops functioning

If the system limits of Active Steering Assist are reached there is no guarantee that the system will remain active or will keep the vehicle in lane.

- ▶ Always keep your hands on the steering wheel and observe the traffic carefully.
- ▶ Always steer the vehicle paying attention to traffic conditions.

⚠ WARNING Risk of accident if Active Steering Assist unexpectedly intervenes

A malfunction in the detection of lane markings and objects can occur.

This could cause unexpected steering intervention.

- ▶ Steer according to traffic conditions.

Activating/deactivating Active Steering Assist
Requirements:

- ESP® is activated, but is not intervening.
- Active Distance Assist DISTRONIC is activated.

Multimedia system:

Settings Quick access

Select Act. Steer. Asst.

Function of Active Lane Change Assist

The following function is country-dependent and only available in conjunction with the Driving Assistance Package.

Active Lane Change Assist supports the driver when changing lanes by applying steering torque if the driver operates a turn signal indicator.

Assistance when changing lanes is provided if all the following conditions are met:

- You are driving on a motorway or road with multiple lanes in the direction of travel.
- The neighbouring lane is separated by a broken lane marking.
- No vehicle is detected in the adjacent lane.
- The driven speed is between 80 km/h and 180 km/h.
- Active Lane Change Assist is switched on in the multimedia system.
- Active Steering Assist is switched on and active.

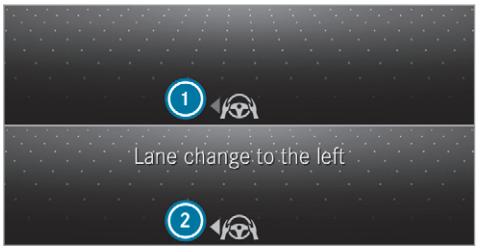

If no vehicle is detected in the adjacent lane and a lane change is permitted, the lane change begins after the driver has activated the turn signal indicator. This is shown to the driver with a green arrow 2 next to the steering wheel symbol. The Lane change to the left message also appears, for example. If Active Lane Change Assist has been activated with the turn signal indicator but a lane change is not immediately possible, a grey arrow 1 appears next to the steering wheel symbol, which remains green.

When the lane change assistance starts, the turn signal indicator is automatically activated along with the display in the multifunction display.

If the assistance graphic is shown when changing lanes, the lane change display appears with an additional arrow pointing towards the adjacent lane (→ page 227).

If a lane change is not possible, the arrow fades out after a few seconds and a new lane change must be initiated. An immediate lane change is only possible on motorway sections without speed limits.

If the system is impaired, Active Lane Change Assist may be cancelled. If it is cancelled, the Lane change cancelled message appears in the multifunction display and a warning tone sounds.

WARNING Risk of accident from changing lane to an occupied adjacent lane

Lane Change Assist cannot always detect clearly if the adjacent lane is free.

The lane change might be initiated although the adjacent lane is not free.

- ▶ Before changing lanes, make sure that the neighbouring lane is free and there is no danger to other road users.
- ▶ Monitor the lane change.

⚠ **WARNING** Risk of accident if Lane Change Assist unexpectedly stops functioning

If the system limitations for Lane Change Assist have been reached, there is no guarantee that the system will remain active.

Lane Change Assist cannot then assist you by applying steering torques.

- ▶ Always monitor the lane change and keep your hands on the steering wheel. Observe the traffic conditions and steer and/or brake if necessary.

System limits

The system limitations of Active Steering Assist apply to Active Lane Change Assist (→ page 223).

The system may also be impaired or may not function in the following situations:

- The sensors in the rear bumper are dirty, damaged or covered by a sticker or ice and snow, for example.
- The exterior lighting is malfunctioning.

ⓘ The Active Lane Change Assist sensors adjust automatically while a certain distance is being driven after the vehicle has been delivered. Active Lane Change Assist is unavailable or only partially available during this teach-in process, no arrow appears next to the Active Steering Assist symbol when the turn signal indicator is activated.

Activating/deactivating Active Lane Change Assist

Multimedia system:

→ ⌂ ▸▸ Settings ▸▸ Assistance ▸▸ Active Lane Change Assist

- ▶ Activate or deactivate the function.

Function of Active Emergency Stop Assist

If the driver continually ignores the visual or acoustic warning to put their hands on the steering wheel, the Beginning emergency stop message appears in the multifunction display. If the driver still does not respond, Active Distance Assist DISTRONIC reduces the speed. The vehicle is decelerated in stages to a standstill.

Depending on the country, at speeds below 60 km/h the hazard warning lights switch on automatically.

When the vehicle is stationary, the following actions are carried out:

- the vehicle is secured with the electric parking brake
- Active Distance Assist DISTRONIC is ended
- the vehicle is unlocked

- if possible, an emergency call is placed to the Mercedes-Benz emergency call centre

The driver can cancel the deceleration at any time by performing one of the following actions:

- steering
- braking or accelerating
- pressing a steering-wheel button
- operating Touch Control
- activating or deactivating Active Distance Assist DISTRONIC

Overview of Active Distance Assist DISTRONIC displays in the instrument cluster

The assistance graphic and the status display show the status of the following functions in the instrument cluster:

- Active Distance Assist DISTRONIC
- Route-based speed adaptation
- Active Steering Assist

Assistant display

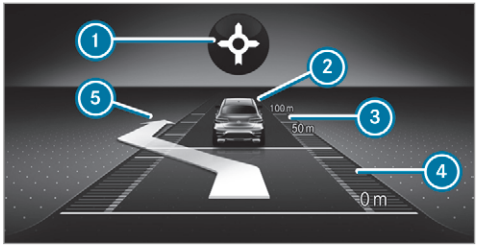

1. Route-based speed adaptation: type of route event
2. Vehicle in front
3. Distance indicator
4. Set specified distance
5. Active Lane Change Assist lane change display

Active Distance Assist DISTRONIC status display and route-based speed adaptation

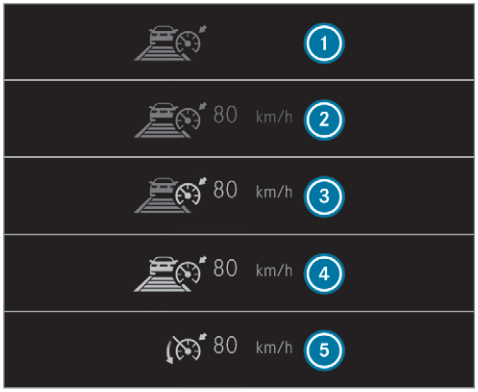

1. Active Distance Assist DISTRONIC selected, set specified distance (number of segments below the vehicle)
2. Active Distance Assist DISTRONIC deactivated, speed stored

③ Active Distance Assist DISTRONIC active, speed stored, no vehicle detected (bright vehicle symbol)
④ Active Distance Assist DISTRONIC active, speed stored, vehicle detected (green vehicle symbol)
⑤ Active Distance Assist DISTRONIC and route-based speed adaptation active, speed stored

ⓘ On motorways or high-speed major roads, the green vehicle symbol is displayed cyclically when the vehicle is ready to pull away.

ⓘ If you depress the accelerator pedal beyond the setting of the Active Distance Assist DISTRONIC, the system is switched to passive mode. The suspended message appears in the multifunction display.

Speedometer

The stored speed is highlighted on the speedometer. If the speed of the vehicle in front or the speed adjustment is less than the stored speed due to the route event ahead, the segments in the speedometer light up. Deactivation of Active Distance Assist DISTRONIC, as well as alterations to the speed due to manual or automatic adoption of the speed limit, are displayed in the control feedback of the multifunction display on a single line.

Active Steering Assist status display

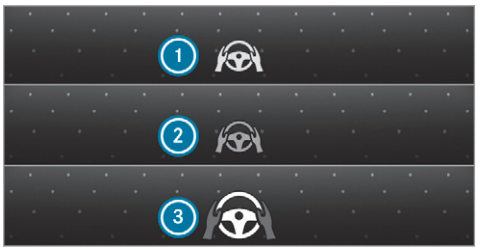

① Grey steering wheel: Active Steering Assist switched on and passive
② Green steering wheel: Active Steering Assist switched on and active
③ Flashing steering wheel: prompt to the driver to actively confirm or transition from active to passive status, system limits detected

During the transition from active to passive status, symbol ③ is shown as enlarged and flashing. Once the system is passive, symbol ① is shown as grey in the multifunction display.

Function of Hill Start Assist

Hill Start Assist holds the vehicle for a short time when pulling away on a hill under the following conditions:

- **Vehicles with automatic transmission:** the transmission is in position D or R.
- The electric parking brake is released.

This gives you enough time to move your foot from the brake pedal to the accelerator pedal and depress it before the vehicle begins to roll away.

⚠ **WARNING** Risk of accident and injury due to the vehicle rolling away

After a short time, Hill Start Assist no longer holds the vehicle and it can roll away.

▶ Therefore, swiftly move your foot from the brake pedal to the accelerator pedal. Never attempt to leave the vehicle if it is being held by Hill Start Assist.

HOLD function

HOLD function

The HOLD function holds the vehicle at a standstill without requiring you to depress the brake pedal, e.g. while waiting in traffic.

The HOLD function is only an aid. The responsibility for the vehicle safely standing still remains with the driver.

System limits

The HOLD function is only intended to provide assistance when driving and is not a sufficient means of safeguarding the vehicle against rolling away when stationary.

- The incline must not be greater than 30%.

Activating/deactivating the HOLD function

⚠ **WARNING** Risk of an accident due to the HOLD function being activated when you leave the vehicle

If you leave the vehicle while only the HOLD function is braking the vehicle, the vehicle can roll away in the following situations:

- If there is a malfunction in the system or in the power supply.
- If the HOLD function is deactivated by depressing the accelerator pedal or brake pedal, e.g. by a vehicle occupant.

▶ Always deactivate the HOLD function and secure the vehicle against rolling away before leaving the vehicle.

! **NOTE** Damage from automatic braking

If one of the following functions is switched on, the vehicle brakes automatically in certain situations:

- Active Brake Assist
- Active Distance Assist DISTRONIC
- HOLD function
- Active Parking Assist

To avoid damage to the vehicle, deactivate these systems in the following or similar situations:

▶ During towing
▶ In a car wash

Requirements:

- The vehicle is stationary.
- The driver's door is closed or the seat belt on the driver's side is fastened.
- The engine is running or has been automatically switched off by the ECO start/stop function.

- The electric parking brake is released.
- Active Distance Assist DISTRONIC is deactivated.
- **Vehicles with automatic transmission:** the transmission is in position D, R or N

Activating the HOLD function

▶ Depress the brake pedal and after a short time quickly depress further until the HOLD display appears in the multifunction display.

▶ Release the brake pedal.

Deactivating the HOLD function

▶ Depress the accelerator pedal to pull away.

or

▶ Depress the brake pedal until the HOLD display disappears from the multifunction display.

The HOLD function is deactivated in the following situations:

- Active Distance Assist DISTRONIC is activated.
- **Vehicles with automatic transmission:** the transmission is switched to position P.
- The vehicle is secured with the electric parking brake.

In the following situations, the vehicle is held by transmission position P and/or by the electric parking brake:

- The seat belt is unfastened and the driver's door is opened.
- The vehicle is switched off.
- There is a malfunction in the system or the power supply is insufficient.

Vehicles with manual transmission:
The Brake immediately message may also appear in the multifunction display:

▶ Immediately depress the brake pedal firmly until the warning message disappears. The HOLD function is deactivated.

A horn sounds at regular intervals if, despite the Brake immediately message, you turn off the engine, remove your seat belt and open the driver's door. If you attempt to lock the vehicle, the horn tone becomes louder. The vehicle cannot be locked until you have deactivated the HOLD function.

ⓘ Once you have switched off the engine, you cannot restart the engine until you have deactivated the HOLD function.

Start-off assist

Function of the start-off assist
The start-off assist enables optimal vehicle acceleration from a standstill. For this, a suitably high-grip road surface is required, the tyres and vehicle must also be in good condition.

Do not activate the start-off assist on public roads.

Be sure to observe the safety notes and information on ESP® (→ page 202).

Activating the start-off assist

⚠ **WARNING** Risk of skidding and having an accident from wheels spinning

When you use start-off assist, individual wheels could spin and you could lose control of the vehicle.

If ESP® is deactivated, there is a risk of skidding and accident!

- Make sure that no persons or obstacles are in the close vicinity of your vehicle.

- Deactivating ESP® (→ page 205).
- Move the steering wheel to the straight-ahead position.
- Depress the brake pedal firmly with your left foot and keep it depressed.
- Engage the D drive position (→ page 180).
- Select the sportiest available drive program S+ or S (→ page 175).
- Rapidly depress the accelerator pedal fully.
- Take your foot off the brake, but keep the accelerator pedal depressed.
  The vehicle pulls away at maximum acceleration.
- Switch on ESP® once the acceleration procedure is complete. ESP® will otherwise not be able to stabilise the vehicle if the vehicle starts to skid or a wheel starts to spin.

Cancelling the start-off assist

- Remove your foot from the accelerator pedal.
- Reactivate the ESP®.

Function of adaptive damping adjustment

Suspension with adaptive damping adjustment continuously adjusts the characteristics of the suspension dampers to the current operating and driving conditions.

The damping is set individually for each wheel and is affected by the following factors:

- the road surface conditions
- vehicle load
- the drive program selected
- the driving style

The drive program can be adjusted using the DYNAMIC SELECT switch.

Parking Assist PARKTRONIC

Function of Parking Assist PARKTRONIC

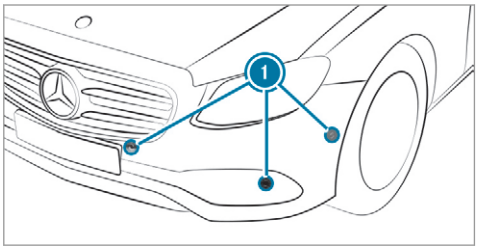

Parking Assist PARKTRONIC is an electronic parking assistance system with ultrasound. It monitors the area around your vehicle using multiple sensors (1) on the front bumper and on the rear bumper. Parking Assist PARKTRONIC shows you the distance between your vehicle and a detected obstacle visually and audibly.

Parking Assist PARKTRONIC is only an aid. It is not a substitute for your attention to the surroundings. The responsibility for safe manoeuvring and parking remains with you. Make sure that there are no persons, animals or objects in

the manoeuvring area while manoeuvring and parking in/exiting parking spaces.

In the standard setting, an intermittent warning tone sounds from a distance of approximately 0.3 m to an obstacle in front and approximately 1.0 m to an obstacle behind. A continuous warning tone sounds from a distance of approximately 0.2 m. Using the Warn early all-round setting in the multimedia system, the warning tones for front and side impact protection can be set to sound at a greater distance of approximately 1.0 m in front and 0.6 m on the sides (→ page 236).

ⓘ The Warn early all-round setting is always active in the rear of the vehicle.

If Parking Assist PARKTRONIC is deactivated, Active Parking Assist is unavailable.

Parking Assist PARKTRONIC display in the multimedia system



Vehicles with Active Parking Assist without a 360° Camera



Vehicles with Active Parking Assist and a 360° Camera

If Active Parking Assist is deactivated and an obstacle is detected in the path of the vehicle, a pop-up window for Parking Assist PARKTRONIC ⓘ appears in the multimedia system at speeds below 10 km/h.

The colour of the individual segments of the warning display is based on the distance to the detected obstacle:

- **Yellow segments:** obstacles at a distance between approx. 0.6 m and 1.0 m

- **Orange segments:** obstacles at a distance between approx. 0.3 m and 0.6 m
- **Red segments:** obstacles at a very short distance of approx. 0.3 m or less

Display of Active Parking Assist PARKTRONIC in the head-up display

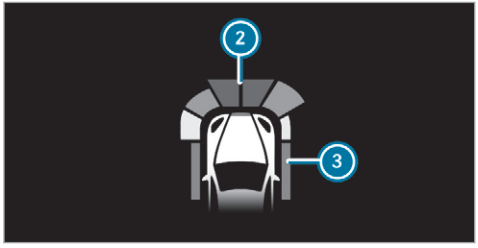

Optionally, obstacles detected by Active Parking Assist PARKTRONIC from a distance of approximately 1.0 m in front (2) and 0.6 m on the sides (3) can also be displayed in the head-up display.

System limits

Parking Assist PARKTRONIC does not necessarily take into account the following obstacles:

- Obstacles below the detection range, e.g. persons, animals or objects.
- Obstacles above the detection range, e.g. overhanging loads, overhangs or loading ramps of lorries.

The sensors must be free of dirt, ice and slush. Otherwise, they may not function correctly. Clean the sensors regularly, taking care not to scratch or damage them.

Vehicles with trailer hitch: Parking Assist PARKTRONIC is deactivated for the rear zone when you establish an electrical connection between your vehicle and a trailer.

Problems with Parking Assist PARKTRONIC

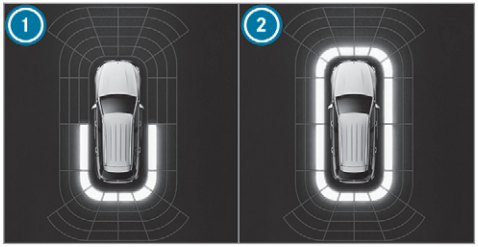

Vehicles without 360° Camera

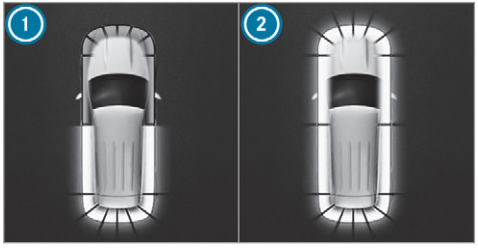

Vehicles with 360° Camera

Problem	Possible causes/consequences and ▶ Solutions
Rear ① or all-round ② segments light up red. The P symbol appears in the multifunction display.	Parking Assist PARKTRONIC is malfunctioning and has been deactivated due to signal interference. ▶ Start the vehicle again. ▶ Check if Parking Assist PARKTRONIC is working at a different location.
Rear ① or all-round ② segments light up red. At the same time, a warning tone sounds for approximately two seconds every time the vehicle is started. The P symbol appears in the multifunction display.	The sensors are dirty. ▶ Clean the sensors and observe the notes on care of vehicle parts (→ page 467). Parking Assist PARKTRONIC has been deactivated due to a malfunction. ▶ Start the vehicle again. ▶ If the problem persists, consult a qualified specialist workshop.

Function of the passive side impact protection

Passive side impact protection is an additional Parking Assist PARKTRONIC function which warns the driver about obstacles at the side of the vehicle. A warning is issued when obstacles are detected between the front and rear detection range. In order for an object on the side to be detected, the sensors in the front and rear bumper must first detect the object while you are driving past it.

During the parking procedure or manoeuvring, objects are detected as the vehicle drives past. If you steer in the direction of a detected obstacle and there is a risk of a lateral collision, a warning is issued. The segments on the sides light up yellow or red, depending on the distance to the obstacle.

Segment colour depending on distance

Colour	Lateral distance
Yellow	Approx. 30 - 60 cm
Red	Approx. < 30 cm

In order for lateral front or rear segments to be displayed, the vehicle must first travel a distance of at least half of the vehicle length. Once the vehicle has travelled the length of the vehicle, all

of the lateral front and rear segments can be displayed.

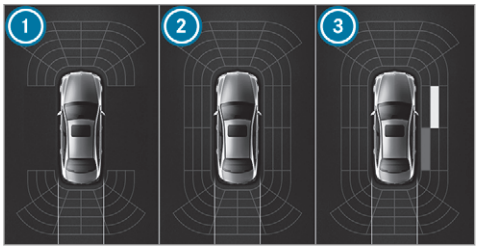

Parking Assist PARKTRONIC display: vehicles without a 360° Camera

1 Operational front and rear
2 Operational front, rear and sides
3 Obstacle detected at the front right (yellow) and rear (red)

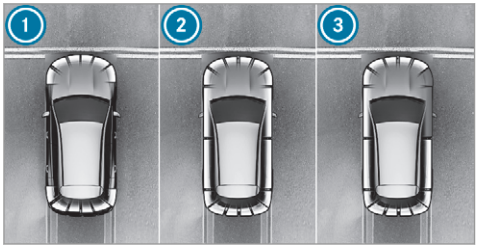

Parking Assist PARKTRONIC display: vehicles with a 360° Camera

1 Operational front and rear
2 Operational front, rear and sides
3 Obstacles detected at the front right (red)

Saved obstacles on the sides are deleted in the following situations, for example:

- You park the vehicle and switch off the ignition.
- You open the doors.

After the engine is restarted, obstacles on the sides must be detected again before a new warning can be issued.

System limits

The system limits for Parking Assist PARKTRONIC apply to passive side impact protection.

The following objects are not detected, for example:

- Pedestrians who approach the vehicle from the side
- Objects placed next to the vehicle

Activating/deactivating Parking Assist PARKTRONIC

! NOTE Risk of an accident from objects at close range

Parking Assist PARKTRONIC may not detect certain objects at close range.

▶ When parking or manoeuvring the vehicle, pay particular attention to any objects which are above or below the sensors, e.g. flowerpots or drawbars. The vehicle or other objects could otherwise be damaged.

If the P OFF symbol is shown in the multifunction display, Parking Assist PARKTRONIC is not active.

Multimedia system:

→ Settings ▸▸ Quick access ▸▸ PARKTRONIC

▶ Activate or deactivate the function.

ⓘ Parking Assist PARKTRONIC is automatically activated when the vehicle is started.

Adjusting the warning tones of Parking Assist PARKTRONIC

Multimedia system:

→ ⌂ ▸▸ Settings ▸▸ Assistance ▸▸ Camera & parking

Adjusting the volume of the warning tones

▶ Select Warning tone volume.

▶ Set a value.

Adjusting the pitch of the warning tones

▶ Select Warning tone pitch.

▶ Set a value.

Specifying the starting point for the warning tones

You can specify whether the Parking Assist PARKTRONIC warning tones should commence when the vehicle is further away from an obstacle.

▶ Select Warn early all-round.

▶ Activate or deactivate the function.

Activating/deactivating audio fadeout

You can specify whether the volume of a media source in the multimedia system is to be reduced when Parking Assist PARKTRONIC sounds a warning tone.

▶ Select Audio fadeout during warning tones.

▶ Activate or deactivate the function.

Reversing camera

Function of the reversing camera

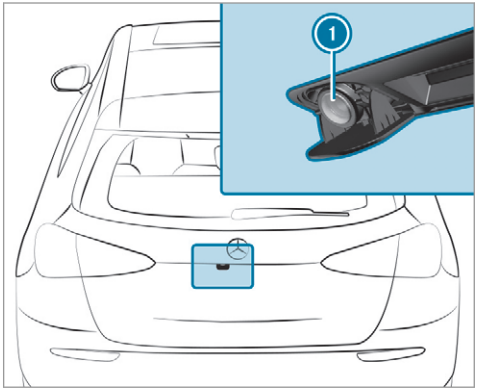

If you have activated the function in the multimedia system (→ page 243), the image from reversing camera 1 is shown in the media display when the reverse gear is engaged. Dynamic guide lines show the path the vehicle will take with the steering wheel in its current position.

This helps you to orient yourself and to avoid obstacles when reversing.

The reversing camera is only an aid. It is not a substitute for your attention to the surroundings. The responsibility for safe manoeuvring and parking remains with you. Make sure that there are no persons, animals or objects etc., in the manoeuvring area while manoeuvring and parking.

The guide lines in the media display show the distances to your vehicle. The distances displayed only apply to road level.

Depending on the vehicle equipment, you can select from the following views:

- Normal view
- Wide-angle view
- Trailer view

The area behind the vehicle is displayed as a mirror image, as in the inside rearview mirror.

Vehicles without Active Parking Assist

The following camera views are available in the multimedia system:

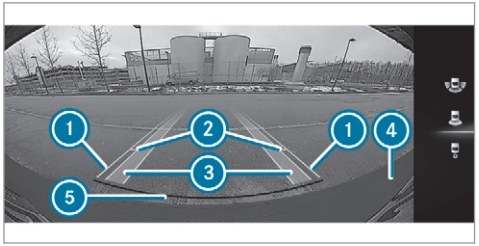

Normal view

1. Yellow guide line, vehicle width (driven surface) depending on the current steering wheel angle (dynamic)
2. Yellow guide line at a distance of approximately 1.0 m from the rear area
3. Yellow lane marking the course the tyres will take at the current steering wheel angle (dynamic)
4. Bumper
5. Red guide line at a distance of approximately 0.3 m from the rear area



Wide-angle view

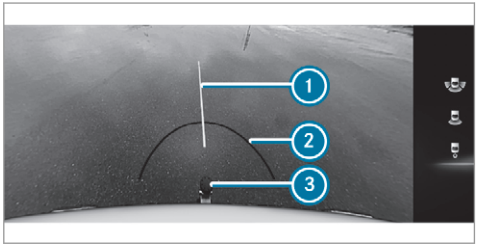

Trailer view (vehicles with a trailer hitch)

1. Yellow guide line, locating aid

2 Red guide line at a distance of approximately 0.3 m from the ball head of the trailer hitch
3 Ball head of the trailer hitch

Vehicles with Active Parking Assist
The following camera views are available in the multimedia system:

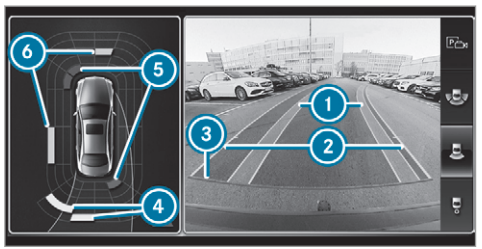

Normal view

1 Yellow lane marking the course the tyres will take at the current steering wheel angle (dynamic)
2 Yellow guide line, vehicle width (driven surface) depending on the current steering wheel angle (dynamic)
3 Red guide line at a distance of approximately 0.3 m from the rear area
4 Yellow warning indicator of Parking Assist PARKTRONIC: obstacles at a distance between approximately 0.6 m and 1.0 m
5 Red warning display of Parking Assist PARKTRONIC: obstacles are very close (approximately 0.3 m or less)
6 Orange warning display of Parking Assist PARKTRONIC: obstacles are a medium distance away (between approximately 0.3 m and 0.6 m)

ⓘ If the entire system fails, the segments of the warning display are shown in red. The indicator lamp on the PARKTRONIC button lights up and the P OFF symbol appears in the multifunction display.

If the system fails at the rear, the display of the segments changes as follows:

- The rear segments are shown in red when reversing.
- The rear segments are hidden when driving forwards.

If Parking Assist PARKTRONIC is deactivated, the warning display fades out (→ page 233).



Wide-angle view

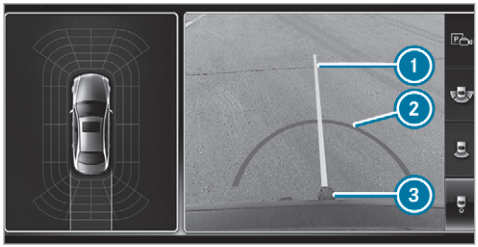

Trailer view (vehicles with a trailer hitch)

1. Yellow guide line, locating aid
2. Red guide line at a distance of approximately 0.3 m from the ball head of the trailer hitch
3. Ball head of the trailer hitch

System failure

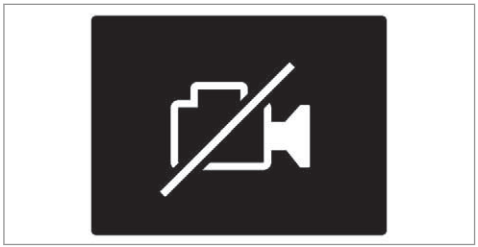

If the reversing camera is not operational, a message appears in the multimedia system.

System limits

The reversing camera will not function or will only partially function in the following situations:

- The tailgate is open.
- There is heavy rain, snow or fog.
- The light conditions are poor, e.g. at night.
- The camera lens is obstructed, dirty or misted up. Observe the notes on cleaning the reversing camera (→ page 467).
- The camera or rear of your vehicle is damaged. In this case, have the camera and its position and setting checked at a qualified specialist workshop.

ⓘ Do not use the reversing camera in these types of situation. You could otherwise injure others or collide with objects when parking the vehicle.

The field of vision and other functions of the reversing camera may be restricted due to additional accessories on the rear of the vehicle (e.g. licence plate bracket or bicycle rack).

ⓘ The contrast of the display may be impaired by direct sunlight or by other light sources, e.g. when driving out of a garage. In this case, pay particular attention.

ⓘ Have the display repaired or replaced if, for example, pixel errors considerably restrict its use.

360° Camera

Function of the 360° Camera

The 360° Camera is a system that consists of four cameras. The cameras cover the immediate vehicle surroundings. The system assists you, e.g. when parking or at exits with reduced visibility.

The views of the 360° Camera are always available when driving forwards up to a speed of approximately 16 km/h and when reversing.

The 360° Camera is only an aid and may show a distorted view of obstacles, show them incorrectly or not show them at all. It is not a substitute for your attention to the surroundings. The responsibility for safe manoeuvring and parking remains with you. Make sure that there are no persons, animals or objects etc., in the manoeuvring area while manoeuvring and parking.

The system evaluates images from the following cameras:

- Reversing camera
- Front camera
- Two side cameras in the outside mirrors

Views of the 360° Camera

You can select from different views:

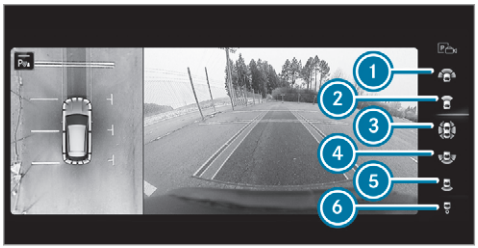

1. Wide-angle view, front
2. Top view with image from the front camera
3. Top view with images from the side cameras in the outside mirrors
4. Wide-angle view, rear
5. Top view with image from the reversing camera
6. Top view with trailer view (vehicles with a trailer hitch)

Top view



1. Lane indicating the route the vehicle will take at the current steering wheel angle
2. Warning display of Parking Assist PARKTRONIC
3. Your vehicle from above

The colour of the individual segments of warning display 2 is based on the distance to the detected obstacle:

- **Yellow segments:** obstacles at a distance between approx. 0.6 m and 1.0 m
- **Orange segments:** obstacles at a distance between approx. 0.3 m and 0.6 m

- **Red segments:** obstacles at a very short distance of approx. 0.3 m or less

When Parking Assist PARKTRONIC is operational and no object is detected, the segments of the warning display are shown in grey.

ⓘ If the entire system fails, the segments of the warning display are shown in red. The indicator lamp on the PARKTRONIC button lights up and the P OFF symbol appears in the multifunction display.

If the system fails at the rear, the display of the segments changes as follows:

- The rear segments are shown in red when reversing.
- The rear segments are hidden when driving forwards.

If Parking Assist PARKTRONIC is deactivated, the warning display fades out (→ page 233).

Guide lines

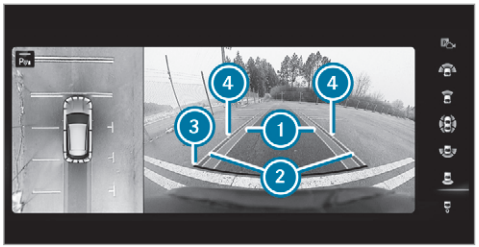

① Yellow lane marking the course the tyres will take at the current steering wheel angle (dynamic)
② Yellow guide line, vehicle width (driven surface) depending on the current steering wheel angle (dynamic)
③ Red guide line at a distance of approximately 0.3 m from the rear area
④ Mark at a distance of approx. 1.0 m

ⓘ When Active Parking Assist is active, lane markings ① are displayed in green.

The guide lines in the media display show the distances to your vehicle. The distances apply to road level.
In trailer mode, the guide lines are shown at the level of the trailer hitch.

Trailer view (vehicles with a trailer hitch)

If you select trailer view and no trailer is coupled to the vehicle, the following display appears:

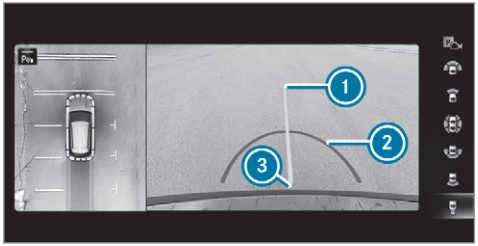

① Yellow guide line, locating aid
② Red guide line at a distance of approximately 0.3 m to the ball head of the trailer hitch
③ Ball head of the trailer hitch

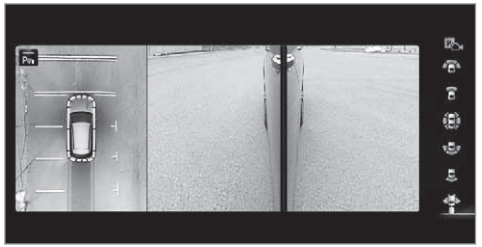

When the electrical connection is established between the vehicle and the trailer, the display changes to the side camera view.

This view supports manoeuvring procedures with a trailer.

Side view of the mirror cameras

The sides of the vehicle can be seen in this view.

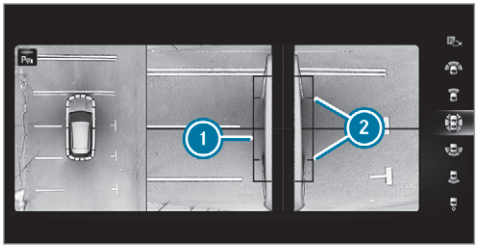

1. Guide line of external vehicle dimensions with outside mirrors folded out
2. Marker of the wheel contact points

System failure

If the 360° Camera is not ready for operation, the following message appears in the multimedia system:

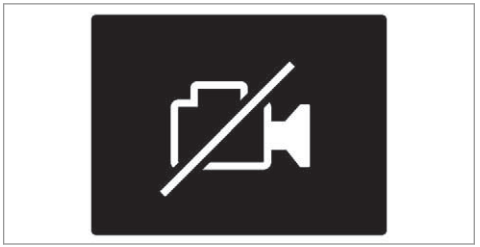

System limits

The 360° Camera will not function or will only partially function in the following situations:

- The doors are open.
- The side mirrors are folded in.
- The tailgate is open.
- There is heavy rain, snow or fog.
- The light conditions are poor, e.g. at night.
- The camera lens is obstructed, dirty or misted up.
- If cameras or vehicle components in which the cameras are fitted are damaged. In this event, have the cameras, their positions and

their setting checked at a qualified specialist workshop.

ⓘ Do not use the 360° Camera under such circumstances. You could otherwise injure others or collide with objects when parking the vehicle.

If the vehicle is carrying a heavy load, leaving the standard height can result in inaccuracies in the guide lines and in the display of the generated images, depending on technical conditions.

The field of vision and other functions of the camera system may be restricted due to additional attachments on the vehicle (e.g. licence plate bracket, bicycle rack).

ⓘ The contrast of the display may be impaired by abrupt direct sunlight or by other light sources, e.g. when driving out of a garage. In this case, pay particular attention.

ⓘ Have the display repaired or replaced if, for example, pixel errors considerably restrict its use.

See the notes on cleaning the 360° Camera (→ page 467).

Selecting a view for the 360° Camera
Requirements:

- The Auto reversing camera function is activated in the multimedia system (→ page 243).

▶ Engage reverse gear.

▶ Select the desired view in the multimedia system (→ page 240).

Switching reversing camera automatic mode on/off

The reversing camera is only an aid. It is not a substitute for your attention to the surroundings. The responsibility for safe manoeuvring and parking remains with you. Make sure that no persons, animals or objects etc. are in the manoeuvring range. Pay attention to your surroundings and be ready to brake at all times.

Multimedia system:

↳ ⌂ ▸▸ Settings ▸▸ Assistance ▸▸ Camera & parking

▶ Switch Auto reversing camera on or off.

Opening the camera cover of the reversing camera

Multimedia system:

↳ ⌂ ▸▸ Settings ▸▸ Assistance ▸▸ Camera & parking

▶ Select Open camera cover.

ⓘ The camera cover closes automatically after some time or after an ignition cycle.

Active Parking Assist

Function of Active Parking Assist

Active Parking Assist is an electronic parking assistance system which uses ultrasound and is automatically activated during forward travel. The system is operational at speeds below approximately 35 km/h.

If all requirements are met, the P display appears in the multifunction display. The system then independently locates and measures parallel and perpendicular parking spaces on both sides of the vehicle.

When Active Parking Assist has detected parking spaces, the P display appears in the multi-

function display. The arrows show on which side of the road detected parking spaces are located. They are then shown in the media display. The parking space and, if necessary, the parking direction can be selected as desired. Active Parking Assist calculates a suitable vehicle path, switches on the turn signal indicator and assists you in parking and exiting the parking space.

Vehicles with automatic transmission: Active Parking Assist provides assistance when changing gear, accelerating, braking and steering the vehicle.

Vehicles with manual transmission: the active brake application and automatic gear change are only available on vehicles with automatic transmission. You must therefore brake the vehicle and change gear yourself when parking or exiting a parking space.

Active Parking Assist is only an aid. It is not a substitute for your attention to the surroundings. The responsibility for safe manoeuvring and parking remains with you. Make sure that no persons, animals or objects etc. are in the manoeuvring range.

Active Parking Assist is cancelled if, among other things, one of the following actions is carried out:

- Parking Assist PARKTRONIC is deactivated.
- Active Parking Assist is deactivated.
- You begin steering.
- You apply the parking brake.
- **Vehicles with automatic transmission:** you engage transmission position P.
- ESP® intervenes.
- You open the doors or the tailgate while driving.

System limits

Objects located above or below the detection range of Parking Assist PARKTRONIC or Active Parking Assist are not detected when the parking space is being measured. These are also not taken into account when the parking manoeuvre is calculated, e.g. overhanging loads, overhangs or loading ramps of lorries, or the boundaries of parking spaces. In some circumstances, Active Parking Assist may therefore guide you into the parking space prematurely.

⚠ WARNING Risk of accident due to objects located above or below the detection range of Active Parking Assist

If there are objects above or below the detection range, the following situations may arise:

- Active Parking Assist may steer too early.
- **Vehicles with automatic transmission:** The vehicle may not stop in front of these objects.

This could cause a collision.

▶ In these situations, do not use Active Parking Assist.

Snowfall or heavy rain may lead to a parking space being measured inaccurately. Parking spaces that are partially occupied by trailer drawbars might not be identified as such or be measured incorrectly. Only use Active Parking Assist on level, high-grip ground.

Do not use Active Parking Assist in the following situations:

- In extreme weather conditions such as ice, packed snow or in heavy rain.
- When transporting a load that protrudes beyond the vehicle.
- If the parking space is on a steep downhill or uphill gradient.
- When snow chains are fitted.

Active Parking Assist may also display parking spaces that are not suitable for parking, e.g. the following:

- Parking spaces where parking is prohibited.
- Parking spaces on unsuitable surfaces.

Active Parking Assist will not assist you with parking spaces at right angles to the direction of travel in the following situations:

- If two parking spaces are located immediately next to each other.
- If the parking space is immediately next to a low obstacle such as a kerb.

Active Parking Assist will not assist you with parking spaces parallel or at right angles to the direction of travel in the following situations:

- If the parking space is on a kerb.
- If the parking space is bordered by an obstacle, e.g. a tree, a post or a trailer.

Parking with Active Parking Assist

ⓘ Depending on the vehicle's equipment, the button may also be located at a different position in the centre console.

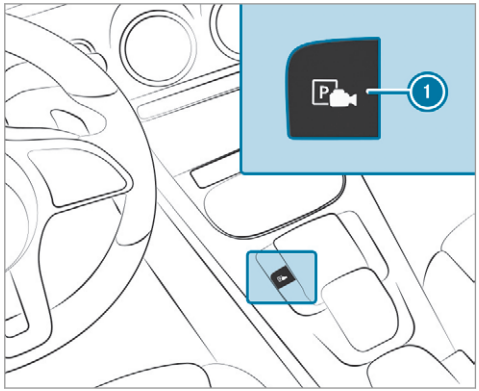

▶ Press button 1.

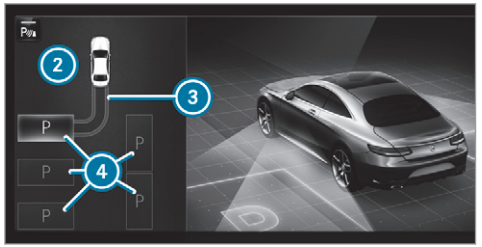

The media display shows the view of Active Parking Assist. Area 2 displays detected parking spaces 4 and vehicle path 3.

ⓘ Vehicle path 3 shown on the media display may differ from the actual vehicle path.

- If you have driven past a parking space: bring the vehicle to a standstill.
- Select desired parking space 4.
- Where necessary, select the parking direction: forwards or reverse.
  Vehicle path 3 is shown, depending on selected parking space 4 and the parking direction.
- Confirm selected parking space 4.

ⓘ The turn signal indicator is switched on automatically when the parking procedure begins. The turn signal indicator is switched off automatically when you switch to D.

You are responsible for selecting the turn signal indicator in accordance with the traffic conditions. If necessary, select the turn signal indicator accordingly.

⚠ WARNING Risk of accident due to vehicle swinging out while parking or pulling out of a parking space

While parking or exiting a parking space, the vehicle swings out and can drive onto areas of the oncoming lane.

This could cause you to collide with objects or other road users.

- Pay attention to objects and other road users.
- Where necessary, stop the vehicle or cancel the parking procedure with Active Parking Assist.
- If, for example, the Please engage reverse gear message appears in the media display: select the corresponding transmission position.
  Vehicles with automatic transmission: the vehicle drives into the selected parking space.
- **Vehicles with manual transmission:** stop as soon as Parking Assist PARKTRONIC sounds the continuous warning tone, if not before. Depending on the message or as required, engage forward or reverse gear.

On completion of the parking procedure, the Parking Assist finished, take control of vehicle display message appears. Further manoeuvring may still be necessary.

- After completion of the parking procedure, safeguard the vehicle against rolling away. When required by legal requirements or local conditions: turn the wheels towards the kerb.

ⓘ You can stop the vehicle and change the transmission position during the parking procedure. The system then calculates a new vehicle path. The parking procedure can then be continued. If no new vehicle path is available, the transmission position will be changed again. If the vehicle has not yet reached the parking space, the parking procedure will be cancelled, should a gear be changed.

Exiting a parking space with Active Parking Assist
Requirements:

- The vehicle has been parked with Active Parking Assist.

ⓘ Depending on the vehicle's equipment, the button may also be located at a different position in the centre console.

Please note that you are responsible for the vehicle and surroundings during the entire parking procedure.

▶ Start the vehicle.

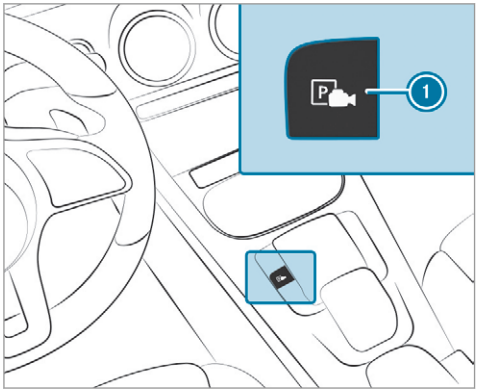

▶ Press button 1.
The media display shows the view of Active Parking Assist.

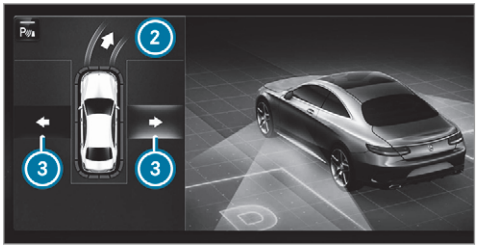

▶ If the vehicle has been parked at right angles to the direction of travel: in area 2, select direction of travel 3, **left** or **right**.

ⓘ The vehicle path shown on the media display may differ from the actual vehicle path.

▶ Confirm direction of exit 3 to drive out of the parking space.

ⓘ The turn signal indicator is switched on automatically when the exiting procedure begins.

You are responsible for selecting the turn signal indicator in accordance with the traffic conditions. If necessary, select the turn signal indicator accordingly.

WARNING Risk of accident due to vehicle swinging out while parking or pulling out of a parking space

While parking or exiting a parking space, the vehicle swings out and can drive onto areas of the oncoming lane.

This could cause you to collide with objects or other road users.

- Pay attention to objects and other road users.
- Where necessary, stop the vehicle or cancel the parking procedure with Active Parking Assist.

- If, for example, the Please engage forward gear message appears in the media display: select the corresponding transmission position.
  The vehicle moves out of the parking space. The turn signal indicator is switched off automatically.

After the exiting procedure has been completed, the Parking Assist finished, take control of vehicle message appears in the media display. A warning tone and the following display in the media display prompt you to take over control of the vehicle:



You have to accelerate, brake, steer and change gear yourself again.

Function of Drive Away Assist

ⓘ Drive Away Assist is only available for vehicles with automatic transmission.

Drive Away Assist can reduce the severity of an impact when pulling away. If an obstacle is detected in the direction of travel, the vehicle's speed is briefly reduced to approx. 2 km/h. If a critical situation is detected, the  symbol appears in the media display.

WARNING Risk of accident caused by limited detection performance of Drive Away Assist

Drive Away Assist cannot always clearly identify objects and traffic situations.

In such cases, Drive Away Assist might:

- Warn you without reason and limit the vehicle speed.
- Not warn you or not limit the vehicle speed.

- Always pay careful attention to the traffic situation; do not rely on Drive Away Assist alone.
- Be prepared to brake or swerve as necessary, provided the traffic situation permits and that it is safe to take evasive action.

Drive Away Assist is only an aid. It is not a substitute for your attention to the surroundings. The responsibility for safe manoeuvring and parking remains with you. Make sure that no

persons, animals or objects etc. are in the manoeuvring range.

A risk of a collision may arise in the following situations, for example:

- If the driver mixes up the accelerator and brake pedals.
- If the wrong gear is selected.

Drive Away Assist is active under the following conditions:

- If Parking Assist PARKTRONIC is activated.
- Every time the gear is changed to R or D when the vehicle is at a standstill.
- If the detected obstacle is less than approx. 1.0 m away.
- If the manoeuvring assistant function is activated in the multimedia system.

System limits

The performance of Drive Away Assist is limited on inclines.

When driving with a trailer, Drive Away Assist is not available.

ⓘ Also observe the system limits of Parking Assist PARKTRONIC (→ page 231).

Function of Cross Traffic Alert

ⓘ Also read the instructions on Blind Spot Assist (→ page 255).



Vehicles with Blind Spot Assist: Cross Traffic Alert can warn drivers of any crossing traffic when reversing out of a parking space. The radar sensors in the bumper also monitor the area adjacent to the vehicle. If a critical situation is detected, symbol 1 appears in the media display. If the driver does not respond to the warning, the vehicle's brakes can be applied automatically.

If the radar sensors are obstructed by vehicles or other objects, detection is not possible.

Cross Traffic Alert is active under the following conditions:

- if Blind Spot Assist is activated.
- if the vehicle is reversing at walking pace.
- If the manoeuvring assistant function is activated in the multimedia system.

System limits

Cross Traffic Alert is not available on inclines.

Cross Traffic Alert is not available when driving with a trailer.

ⓘ Also observe the system limits of Active Blind Spot Assist (→ page 255).

Activating/deactivating manoeuvring assistance

Multimedia system:

↪ ⌂ ▸▸ Settings ▸▸ Assistance ▸▸ Camera & parking

▶ Activate or deactivate Manoeuvring assistance.

ⓘ Manoeuvring assistance must be active for the function of Drive Away Assist (→ page 248) and Cross Traffic Alert (→ page 249).

ATTENTION ASSIST

Function of ATTENTION ASSIST

ATTENTION ASSIST assists you on long, monotonous journeys, e.g. on motorways and trunk roads. If ATTENTION ASSIST detects indicators of fatigue or increasing lapses in concentration on the part of the driver, it suggests taking a break.

ATTENTION ASSIST is only an aid. It cannot always detect fatigue or lapses in concentration in time. The system is not a substitute for a well-rested and attentive driver. On long journeys, take regular breaks in good time that allow for adequate recuperation.

You can choose between two settings:

- **Standard:** normal system sensitivity.
- **Sensitive:** higher system sensitivity. The driver is warned earlier and the attention level detected by ATTENTION ASSIST is adapted accordingly.

If drowsiness or increasing lapses in concentration are detected, the ATTENTION ASSIST: Take a break! warning appears in the Instrument Display. You can acknowledge the message and take a break where necessary. If you do not take a break and ATTENTION ASSIST continues to detect increasing lapses in concentration, you will be warned again after a minimum of 15 minutes.

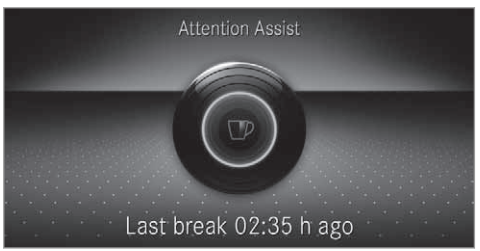

You can have the following status information for ATTENTION ASSIST displayed in the assistance menu of the on-board computer:

- The length of the journey since the last break.
- The attention level determined by ATTENTION ASSIST:
  - the fuller the circle, the higher the attentional level determined
  - as your attention wanes, the circle in the centre of the display becomes smaller

If ATTENTION ASSIST is unable to calculate the attention level and cannot issue a warning, the System suspended message appears.

If a warning is given in the Instrument Display, the multimedia system offers to search for a rest area. You can select a rest area and start navigation to this rest area. This function can be activated and deactivated in the multimedia system.

If ATTENTION ASSIST is deactivated, the OFF symbol appears in the assistance graphic in the Instrument Display when the engine is running. ATTENTION ASSIST is activated automatically

when the engine is re-started. The last selected sensitivity level remains stored.

System limits

ATTENTION ASSIST is active in the 60 km/h to 200 km/h speed range.

The functionality of ATTENTION ASSIST is restricted, and warnings may be delayed or not occur at all in the following situations:

- If you have been driving for less than approximately 30 minutes.
- If the road condition is poor (uneven road surface or potholes).
- If there is a strong side wind.
- If you adopt a sporty driving style (high cornering speeds or high rates of acceleration).
- If the Steering Assist function of Active Distance Assist DISTRONIC is active.
- If the time has been set incorrectly.
- In active driving situations, if you change lanes and vary your speed frequently.

The ATTENTION ASSIST tiredness or alertness assessment is deleted and restarted when continuing the journey in the following situations:

- If you switch off the engine.
- If you unfasten your seat belt and open the driver's door (e.g. changing drivers or taking a break).

Setting ATTENTION ASSIST

Multimedia system:

→ ⌂ ▸▸ Settings ▸▸ Assistance ▸▸ Attention Assist

Setting options

▶ Select Standard, Sensitive or Off.

Suggesting a rest area

▶ Select Suggest rest area.

▶ Activate or deactivate the function.
If ATTENTION ASSIST detects fatigue or increasing lack of attention, it suggests a rest area in the vicinity.

▶ Select the suggested rest area.
You are guided to the selected rest area.

Speed Limit Assist

Function of Speed Limit Assist

ⓘ The availability of the following function is country-dependent.

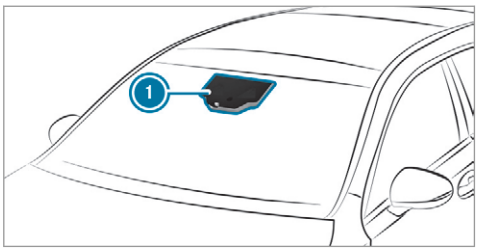

Speed Limit Assist detects speed limits with multifunction camera 1 and displays them in the instrument cluster and optionally in the head-up display. The camera also detects speed limits with a restriction indicated by an additional sign (e.g. when wet). The system detects stop signs, thereby preventing the engine from being switched off by the ECO start/stop function.

Speed Limit Assist is only an aid. The driver is responsible for keeping a safe distance to the vehicle in front, for vehicle speed and for braking in good time.

Warning when the maximum permissible speed is exceeded

The system can warn you if you unintentionally exceed the maximum permissible speed. To do this, you can specify in the multimedia system by how much the maximum permissible speed can be exceeded before a warning is issued. You can specify whether the warning is to be just a visual warning or an acoustic one as well.

Display in the Instrument Display

ⓘ The illustrations show the Instrument Display in the widescreen cockpit.

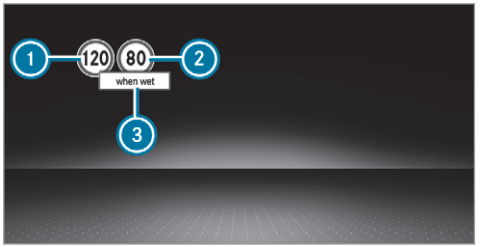

1. Permissible speed
2. Permissible speed when there is a restriction
3. Additional sign with restriction

Speed Limit Assist is not available in all countries. If it is unavailable, the following display is shown in the speedometer:



System limits

The system may be impaired or may not function in the following situations:

- If there is poor visibility, e.g. due to insufficient illumination of the road, if there are highly variable shade conditions or in rain, snow, fog or heavy spray.
- If there is glare, e.g. from oncoming traffic, direct sunlight or reflections.
- If the windscreen in the area of the multifunction camera is dirty, or if the camera is misted up, damaged or covered.
- If the traffic signs are hard to detect, e.g. due to dirt or snow, or because they are covered or due to insufficient lighting.
- If you turn sharply, when passing traffic signs outside the camera's field of vision.

Setting Speed Limit Assist
Multimedia system:
→ ⌂ ▸▸ Settings ▸▸ Assistance ▸▸ Speed Limit Assist

Adjusting the type of warning

▶ Select Visual & audible, Visual or None.

Adjusting the warning threshold
This value determines the speed at which a warning is issued when exceeded.

▶ Select Warning threshold.
▶ Set the desired speed.

ⓘ If one of the following systems is activated, the speed detected can be manually adopted as the speed limit:

- Active Distance Assist DISTRONIC
- Cruise control
- Variable limiter

Further information (→ page 218).

Traffic Sign Assist

Function of Traffic Sign Assist

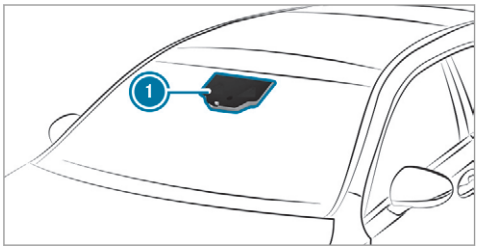

Traffic Sign Assist detects traffic signs with multifunction camera (1). It assists you by displaying detected speed limits and overtaking restrictions in the instrument cluster and optionally in the head-up display or central display.

Since Traffic Sign Assist also uses the data stored in the navigation system, it can update the display in the following situations without detecting traffic signs:

- When the vehicle changes roads, e.g. slip road or motorway exit.
- When a village or town boundary which is stored in the digital map is passed.

If the system detects that you are driving onto a section of road in the wrong direction of travel, it triggers a warning.

The camera also detects traffic signs with a restriction indicated by an additional sign (e.g. when wet).

Traffic Sign Assist is only an aid. The driver is responsible for keeping a safe distance from the vehicle in front, for vehicle speed and for braking in good time.

Warning when the maximum permissible speed is exceeded
The system can warn you if you unintentionally exceed the maximum permissible speed. To do this, you can specify in the multimedia system by how much the maximum permissible speed can be exceeded before a warning is issued. You can specify whether the warning is to be just a visual warning or an acoustic one as well.

Display in the Instrument Display

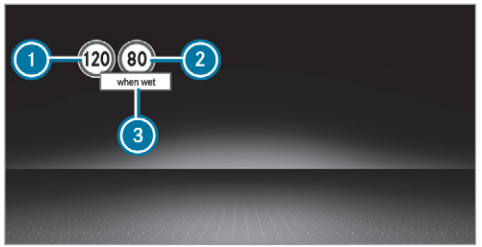

Instrument Display in the widescreen cockpit

1. Permissible speed
2. Permissible speed when there is a restriction
3. Additional sign with restriction

ⓘ **Vehicles with a standard Instrument Display:** a **+** symbol next to a traffic sign in the Instrument Display indicates that additional traffic signs have been detected. These can also be displayed in the media display and optionally in the head-up display.

If Traffic Sign Assist cannot determine the current maximum permissible speed (e.g. due to missing signs), the following display appears in the Instrument Display:



This is displayed continuously if the vehicle is in a country where Traffic Sign Assist is not supported. Traffic Sign Assist is not available in all countries.

ⓘ Also observe the information on display messages in Traffic Sign Assist (→ page 537).

Warning when approaching pedestrian crossings (vehicles with Driving Assistance Package)

The system can warn you if you approach a pedestrian crossing with your vehicle. A message appears in the instrument cluster.



The warning occurs if appropriate traffic signs or road markings are recognised and pedestrians are present in the danger zone.

System limits

The system may be impaired or may not function in the following situations:

- If there is poor visibility, e.g. due to insufficient illumination of the road, if there are highly variable shade conditions or in rain, snow, fog or heavy spray.
- If there is glare, e.g. from oncoming traffic, direct sunlight or reflections.

- If the windscreen in the area of the multifunction camera is dirty, or if the camera is misted up, damaged or covered.
- If the traffic signs are hard to detect, e.g. due to dirt or snow, or because they are covered or due to insufficient lighting.
- If the information in the navigation system's digital map is incorrect or out-of-date.
- If the signs are ambiguous, e.g. traffic signs on construction sites or in adjacent lanes.
- If you turn sharply, when passing traffic signs outside the camera's field of vision.

Setting Traffic Sign Assist
Requirements:

- **Only vehicles with Driving Assistance Package:**

  Active Distance Assist DISTRONIC must be activated for the automatic adoption of speed limits.

Multimedia system:

↝ ⌂ ▸▸ Settings ▸▸ Assistance ▸▸ Traffic Sign Assist

Activating/deactivating automatic adoption of speed limits (only vehicles with Driving Assistance Package)

▶ Select Adopt limit.

▶ Activate or deactivate the function.
The speed limits detected by Traffic Sign Assist are automatically adopted by Active Distance Assist DISTRONIC.

ⓘ If one of the following systems is activated, the speed detected can be manually adopted as the speed limit:

- Active Distance Assist DISTRONIC
- Cruise control
- Variable limiter

Further information (→ page 218).

Displaying detected traffic signs in the media display

▶ Select Display in head unit.

▶ Activate or deactivate the function.

Adjusting the type of warning

▶ Select Visual & audible, Visual or Off.

Adjusting the warning threshold
This value determines the speed at which a warning is issued when exceeded.

▶ Select Warning threshold.

▶ Set the desired speed.

Blind Spot Assist and Active Blind Spot Assist with exit warning

Function of Blind Spot Assist and Active Blind Spot Assist with exit warning
Blind Spot Assist and Active Blind Spot Assist use two lateral, rear-facing radar sensors to monitor the area up to 40 m behind and 3 m next to your vehicle.

If a vehicle is detected at speeds above approximately 12 km/h and this vehicle subsequently enters the monitoring range directly next to your vehicle, the warning lamp in the outside mirror lights up red.

If a vehicle is detected close to the side of your vehicle, the red warning lamp in the outside mirror flashes. If you switch on the turn signal indicator in the corresponding direction, a warning tone sounds once. If the turn signal indicator remains switched on, all other detected vehicles are indicated only by the flashing of the red warning lamp.

If you overtake a vehicle quickly, no warning is given.

⚠ WARNING Risk of accident despite Blind Spot Assist

Blind Spot Assist does not react to vehicles approaching and overtaking you at a greatly different speed.

As a result, Blind Spot Assist cannot warn drivers in this situation.

- Always pay careful attention to the traffic situation and maintain a safe distance at the side of the vehicle.

Blind Spot Assist and Active Blind Spot Assist are only aids. They may fail to detect some vehicles and are no substitute for attentive driving. Always ensure that there is sufficient distance to the side for other road users and obstacles.

Exit warning

The exit warning is an additional function of Blind Spot Assist and can warn vehicle occupants about approaching vehicles when leaving the vehicle when stationary.

⚠ WARNING Risk of accident despite exit warning

The exit warning reacts neither to stationary objects nor to vehicles approaching you at a greatly different speed.

As a result, the exit warning cannot warn drivers in these situations.

- Always pay particular attention to the traffic situation when opening the doors and make sure there is sufficient clearance.

If there is a vehicle in the monitoring range, this is indicated in the outside mirror. If a vehicle occupant opens the door on the side with the warning, a warning tone sounds and the warning lamp in the outside mirror starts to flash.

This additional function is only available when Blind Spot Assist is activated and up to a maximum of three minutes after the ignition has been switched off. The exit warning is no longer available once the warning lamp in the outside mirror flashes three times.

The exit warning is only an aid and not a substitute for the attention of vehicle occupants. The responsibility for opening and closing the doors and for leaving the vehicle remains with the vehicle occupants.

System limits

Blind Spot Assist and Active Blind Spot Assist may be limited in the following situations:

- if there is dirt on the sensors or the sensors are obscured
- in poor visibility, e.g. due to fog, heavy rain or snow
- if there are narrow vehicles, e.g. bicycles or motorbikes
- if the road has very wide or narrow lanes

- if vehicles are not driving in the middle of their lane

Warnings may be issued in error when driving close to crash barriers or similar solid lane borders. Always make sure that there is sufficient distance to the side for other traffic or obstacles.

Warnings may be interrupted when driving alongside long vehicles, for example lorries, for a prolonged time.

Blind Spot Assist is not operational when reverse gear is engaged.

Blind Spot Assist is not operational when a trailer is coupled to the vehicle and the electrical connection has been correctly established.

The exit warning may be limited in the following situations:

- when the sensors are covered by adjacent vehicles in narrow parking spaces
- when people approach the vehicle
- in the event of stationary or slowly moving objects

Function of brake application (Active Blind Spot Assist)

ⓘ The brake application function is only available for vehicles with a Driving Assistance Package.

If Active Blind Spot Assist detects a risk of a side impact in the monitoring range, a course-correcting brake application is carried out. This is designed to help you avoid a collision.

The course-correcting brake application is available in the speed range between approximately 30 km/h and 200 km/h.

⚠ **WARNING** Risk of accident despite brake application of Active Blind Spot Assist

A course-correcting brake application cannot always prevent a collision.

▶ Always steer, brake or accelerate yourself, especially if Active Blind Spot Assist warns you or makes a course-correcting brake application.

▶ Always maintain a safe distance at the sides.

⚠ **WARNING** Risk of accident despite Active Blind Spot Assist

Active Blind Spot Assist does not react to the following:

- if vehicles overtake too closely on the side, placing them in the blind spot area
- vehicles approaching and overtaking you at a greatly different speed

As a result, Active Blind Spot Assist may neither give warnings nor intervene in such situations.

▶ Always pay careful attention to the traffic situation and maintain a safe distance at the side of the vehicle.



If a course-correcting brake application occurs, the red warning lamp flashes in the outside mirror and a warning tone sounds. In addition, a display (1) indicating the danger of a side collision appears in the multifunction display.

In rare cases, the system may make an inappropriate brake application. This brake application may be interrupted at any time if you steer slightly in the opposite direction or accelerate.

System limits

Either a course-correcting brake application appropriate to the driving situation, or none at all, may occur in the following situations:

- Vehicles or obstacles, e.g. crash barriers, are located on both sides of your vehicle.
- A vehicle approaches too closely on the side.
- You have adopted a sporty driving style with high cornering speeds.
- You brake or accelerate significantly.
- A driving safety system intervenes, e.g. ESP® or Active Brake Assist.
- ESP® is deactivated.
- A loss of tyre pressure or a defective tyre is detected.
- You are driving with a trailer and the electrical connection to the trailer hitch has been correctly established.

Activating/deactivating Blind Spot Assist or Active Blind Spot Assist

Multimedia system:

→ ⌂ ▸▸ Settings ▸▸ Assistance

▶ Activate or deactivate Blind Spot Assist.

or

▶ Activate or deactivate Act. Blind Spot Assist.

ⓘ Depending on the vehicle's equipment, Blind Spot Assist or Active Blind Spot Assist is available.

Active Lane Keeping Assist

Function of Active Lane Keeping Assist

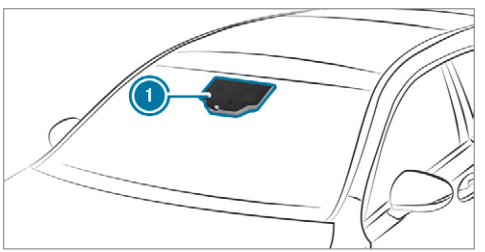

Active Lane Keeping Assist monitors the area in front of your vehicle by means of multifunction camera (1). It serves to protect you against unintentionally leaving your lane. You will be warned by vibration pulses in the steering wheel and guided by a course-correcting brake application back into your lane.

You are warned by vibration pulses in the steering wheel in the following circumstances:

- Active Lane Keeping Assist detects a lane marking.
- A front wheel drives over this lane marking.

You will also be guided back into your lane by means of a course-correcting brake application if the following conditions are met:

- Active Lane Keeping Assist detects lane markings on both edges of the lane.
- A front wheel drives over a solid lane marking.

You can activate or deactivate the Active Lane Keeping Assist warning.

The status of Active Lane Keeping Assist is displayed in the on-board computer:

- (green): Active Lane Keeping Assist is activated and operating.
- (grey): Active Lane Keeping Assist is activated, but not operating.
- OFF: Active Lane Keeping Assist is deactivated or there is a malfunction.

Active Lane Keeping Assist can neither reduce the risk of an accident if you fail to adapt your driving style nor override the laws of physics. It cannot take into account road, weather or traffic conditions. Active Lane Keeping Assist is only an aid. You are responsible for maintaining a safe distance to the vehicle in front, for vehicle speed, for braking in good time and for staying in lane.

Active Lane Keeping Assist can bring the vehicle back into the lane with a lane-correcting brake application. In the case of a broken lane marking being detected, a brake application will only be made if a vehicle has been detected in the adjacent lane. Oncoming traffic can be detected.

Vehicles with Driving Assistance Package or Driving Assistance Plus Package: overtaking vehicles and vehicles in adjacent lanes can also be detected.

Vehicles without Driving Assistance Package or Driving Assistance Plus Package: a lane-correcting brake application also takes place when, in addition to a broken lane marking, the edge of a firm road surface is detected (e.g. central reservation).

Active Lane Keeping Assist is available in the speed range between 60 km/h and 200 km/h.



If a lane-correcting brake application occurs, display (1) appears in the multifunction display.

Sensitivity of Active Lane Keeping Assist

ⓘ The availability of the following function is country-dependent.

A lane-correcting brake application also occurs in the Sensitive setting in the following situations:

- Active Lane Keeping Assist detects a solid lane marking.
- A front wheel drives over this lane marking.

System limits

No lane-correcting brake application occurs in the following situations:

- You clearly and actively steer, brake or accelerate.
- You have switched on the turn signal indicator (situation-dependent).
- A driving safety system intervenes, such as ESP®, Active Brake Assist or Active Blind Spot Assist.
- You have adopted a sporty driving style with high cornering speeds or high rates of acceleration.
- When ESP® is deactivated.
- When driving with a trailer, the electrical connection to the trailer has been correctly established.
- If a loss of tyre pressure or a defective tyre has been detected and displayed.

The system may be impaired or may not function in the following situations:

- If there is poor visibility, e.g. due to insufficient illumination of the road, if there are highly variable shade conditions or in rain, snow, fog or heavy spray.
- If there is glare, e.g. from oncoming traffic, the sun or reflections.
- If the windscreen in the area of the multifunction camera is dirty, or if the camera is misted up, damaged or covered.
- If there are no lane markings, or several unclear lane markings are present for one lane, e.g. around roadworks.
- If the lane markings are worn, dark or covered.
- If the distance to the vehicle in front is too short and thus the lane markings cannot be detected.
- If the lane markings change quickly, e.g. lanes branch off, cross one another or merge.
- If the carriageway is very narrow and winding.

Vehicles without Driving Assistance Package: Active Lane Keeping Assist uses radar sensors to monitor several areas around the vehicle. If the radar sensors in the rear bumper are dirty or covered with snow, the system may be impaired or may not function. If an obstacle in the lane in which you are driving has been detected, no lane-correcting brake application occurs.

Activating/deactivating Active Lane Keeping Assist

Multimedia system:

→ ⌂ » Settings » Quick access » Active Lane Keeping Assist

▶ Activate or deactivate the function.

Setting Active Lane Keeping Assist
Multimedia system:
→ ⌂ ›› Settings ›› Assistance ›› Active Lane Keeping Assist

Setting the sensitivity

ⓘ The availability of this function is dependent on the country.

▶ Select Standard, Sensitive or Off.

Activating/deactivating the haptic warning

▶ Select Warning.
Activate or deactivate the function.

Trailer hitch

Notes on trailer operation

Mercedes-AMG vehicles: be sure to observe the notes in the Supplement. Otherwise, you may fail to recognise dangers.

Plug-in hybrid: observe the notes in the Supplement. Otherwise, you may fail to recognise dangers.

Observe the following notes on the tongue weight:

- Do not use a tongue weight that exceeds or falls below the permissible tongue weight
- Use a tongue weight as close as possible to the maximum tongue weight

Do not exceed the following values:

- Permissible trailer load
- Permissible rear axle load of the towing vehicle
- Permissible gross mass of the towing vehicle
- Permissible gross mass of the trailer
- Maximum permissible speed of the trailer

Ensure the following before starting a journey:

- The tyre pressure on the rear axle of the towing vehicle is set for a maximum load
- The lighting of the connected trailer is operational
- **Vehicles without LED headlamps or MULTIBEAM LED headlamps:** the headlamps have been set correctly

In the event of increased rear axle load, the car/trailer combination may not exceed a maximum speed of 100 km/h for reasons concerning the operating permit. This also applies in countries in which the permissible maximum speed for car/trailer combinations is above 100 km/h.

Folding the ball neck out/in

⚠ **WARNING** Risk of accident due to the ball neck not being engaged

If the ball neck is not engaged, the trailer may come loose.

▶ Always engage the ball neck as described.

⚠ **WARNING** Risk of injury from ball neck swinging outwards

The ball neck may swing outwards when unlocking or when it has not been properly engaged.

There is a risk of injury within the ball neck's range of movement!

- Unlock the ball neck only when its range of movement is unobstructed.
- Always be sure the ball neck is engaged when folding inwards.

Requirements:

- The vehicle is secured against rolling away.
- The swivel range is clear.
- The trailer cables or adapter plugs have been removed.

Folding the ball neck out

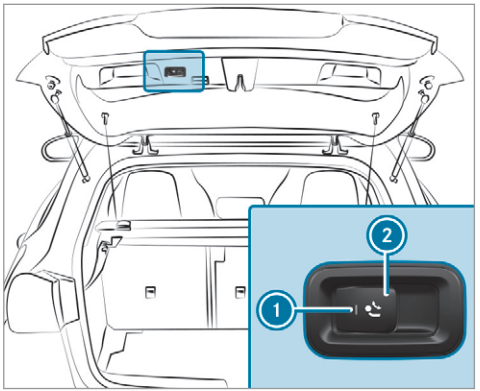

- Pull release switch (2) until the ball neck unlocks.
  The ball neck will fold out from under the rear bumper.
  Indicator lamp (1) will flash.

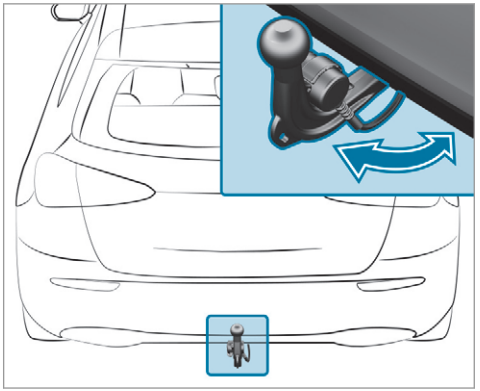

- Pull the ball neck in the direction of the arrow until it engages audibly in a vertical position.
  Indicator lamp (1) on the ball neck release switch will go out.

  If the ball neck is not securely locked in place, the Trailer coupling Check lock display message will appear on the multifunction display.

▶ Remove the cover cap from the ball head and store it in a safe place.

Make sure that the ball on the ball neck is clean. Check that it is either greased or dry (grease-free), depending on the instructions for the trailer.

Folding the ball neck in

▶ Pull release switch (2) until the ball neck unlocks.
The ball neck will fold up under the rear bumper.

Indicator lamp (1) will flash.

▶ Push the ball neck in the direction of the arrow until it engages audibly behind the bumper.
Indicator lamp (1) will go out and the message on the multifunction display will disappear.

Observe the information on the displays on the instrument cluster:

- Warning and indicator lamps (⟶ page 593)
- Display messages (⟶ page 537)

Coupling up / uncoupling a trailer

Requirements:

- The ball neck is extended and engaged in a securely locked position

Trailers with a 7-pin plug can be connected to the vehicle with the following adapters:

- Adapter plug
- Adapter cable

The trailer will be correctly detected by the vehicle only if the following conditions are met:

- The trailer is connected correctly
- The trailer lighting system is in working order

The functions of the following systems are affected by a correctly connected trailer:

- Active Lane Keeping Assist
- ESP® trailer stabilisation
- Parking Assist PARKTRONIC
- Active Parking Assist
- Blind Spot Assist or Active Blind Spot Assist
- Drive Away Assist
- Cross Traffic Alert
- Reversing camera
- 360° camera

Coupling up a trailer

NOTE Damage to the battery due to full discharge

Charging the trailer battery using the power supply of the trailer can damage the vehicle battery.

▶ Do not use the vehicle's power supply to charge the trailer battery.

▶ Remove the cover from the ball head and store it in a safe place (⟶ page 112).

▶ Position the trailer on a level surface behind the vehicle and couple it up to the vehicle.



- Open the socket cap.
- Insert the plug with lug (1) in groove (3) on the socket.
- Turn the bayonet coupling (2) to the right as far as it will go.
- Let the cap engage.
- Secure the cable to the trailer with cable ties (only if you are using an adapter cable).
- Make sure that the cable is always slack for ease of movement during cornering.

Under the following conditions, a message may appear on the multifunction display even if the trailer has been connected correctly:

- LEDs have been installed in the trailer lighting system
- The current has fallen below the trailer lighting system's minimum current (50 mA)

ⓘ Accessories can be connected to the permanent power supply up to 180 W and to the power supply that is switched on via the ignition lock.

Uncoupling a trailer

⚠ **WARNING** Risk of being crushed and becoming trapped when uncoupling a trailer

When uncoupling a trailer with an engaged inertia-activated brake, your hand may become trapped between the vehicle and the trailer drawbar.

- Do not uncouple trailers with an engaged overrun brake.

NOTE Damage when uncoupling in a state of overrun

Uncoupling in a state of overrun can damage the vehicle.

- Do not uncouple trailers with an engaged overrun brake.

- Secure the trailer against rolling away.
- Disconnect the electrical connection between the vehicle and the trailer.
- Uncouple the trailer.
- Place the cover on the ball head.

Bicycle rack function

⚠ **WARNING** Risk of an accident when using the bicycle rack incorrectly

The bicycle rack may become detached from the vehicle in the following cases:

- the permissible load capacity of the trailer hitch is exceeded.

- the bicycle rack is used incorrectly.
- the bicycle rack is secured to the ball neck beneath the ball head.

Observe the following for your own safety and that of other road users:

- ▶ always adhere to the permissible load capacity of the trailer hitch.
- ▶ only use the bicycle rack to transport bicycles.
- ▶ always properly secure the bicycle rack by attaching it to the ball head.
- ▶ only use bicycle racks approved by Mercedes-Benz.
- ▶ always observe the bicycle rack operating instructions.

! **NOTE** Damage to, or cracks on, the trailer hitch due to unsuitable bicycle racks or bicycle racks being used incorrectly

- ▶ use only bicycle racks approved by Mercedes-Benz.

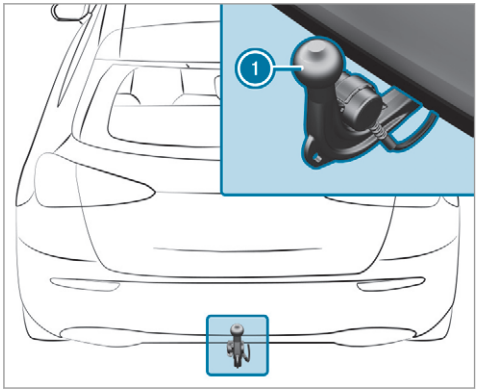

Depending on the bicycle rack's design, up to three bicycles can be transported on the bicycle rack.

When mounted by attaching to ball head (1), the maximum load capacity is 75 kg.

The load capacity is calculated from the weight of the bicycle rack and the bicycle rack load.

The vehicle's driving characteristics will change when a bicycle rack is fitted. Adapt your driving style accordingly. Drive carefully and maintain a safe distance.

When using a bicycle rack, set the tyre pressure for maximum loading on the rear axle of the vehicle. Further information on the tyre pressure can be found in the tyre pressure table (→ page 495).

Notes on loading

The larger the distance between the load's centre of gravity and the ball head, the greater the load on the trailer hitch.

Therefore, observe the following notes:

- mount heavy bicycles as close to the vehicle as possible
- always distribute the load on the bicycle rack as evenly as possible across the vehicle's longitudinal axis

Mercedes-Benz recommends removing all detachable parts from bicycles (e.g. baskets, child seats, rechargeable batteries) before loading them onto the bicycle rack. This will improve the aerodynamic resistance and centre of gravity of the bicycle rack.

Always secure the bicycles to prevent them from moving around and check them at regular intervals to ensure that they are secure.

Do not use tarpaulins or other covers. The driving characteristics and rear view may be impaired. In addition, aerodynamic resistance and the load on the trailer hitch will increase.

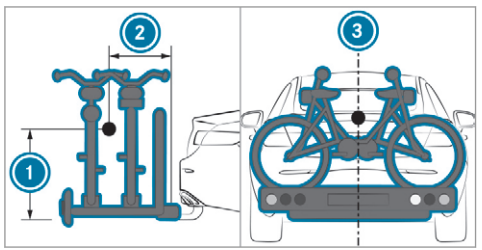

Load distribution on the bicycle rack

1. Vertical distance between centre of gravity and ball head
2. Horizontal distance between centre of gravity and ball head
3. The centre of gravity is on the vehicle's centre axis

Observe the following information when you are loading the bicycle rack with up to three bicycles:

Loading the bicycle rack

Total weight of bicycle rack and load	Max. distance 1	Max. distance 2
Up to 75 kg	420 mm	300 mm

Vehicle towing instructions

The vehicle is not suitable for the use of tow bar systems that are used for flat towing or dinghy towing, for example. Attaching and using tow bar systems can lead to damage on the vehicle. When you are towing a vehicle with tow bar systems, safe driving characteristics cannot be guaranteed for the towing vehicle or the towed vehicle. The vehicle-trailer combination may swerve from side to side. Comply with the permitted towing methods (→ page 484) and the instructions for towing with both axles on the ground (→ page 485).

Instrument display overview

Mercedes-AMG vehicles: be sure to observe the notes in the Supplement. Otherwise, you may fail to recognise dangers.

Plug-in hybrid: be sure to observe the notes in the Supplement. Otherwise, you may fail to recognise dangers.

⚠ **WARNING** Risk of accident due to an instrument display malfunction

If the Instrument Display has failed or malfunctioned, you may not recognise function restrictions applying to safety relevant systems.

The operating safety of your vehicle may be impaired.

- ▶ Drive on carefully.
- ▶ Have the vehicle checked immediately at a qualified specialist workshop.

If the operating safety of your vehicle is impaired, park the vehicle immediately and safely. Contact a qualified specialist workshop.

Instrument display (standard)



1. Speedometer (example)
2. Multifunction display
3. Fuel level and fuel filler flap location indicator

Further content can be shown on the multifunction display 2:

- Assistant display
- Telephone
- Navigation
- Trip
- Radio
- Media
- Vehicle dynamics
- Styles
- Service

Instrument display in the widescreen cockpit

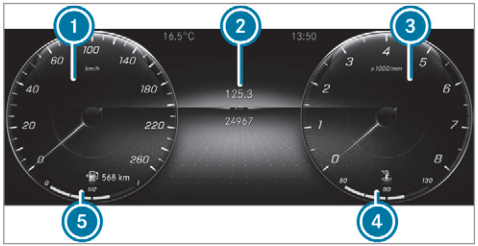

1. Speedometer (example)
2. Multifunction display
3. Rev counter (example)
4. Coolant temperature display
5. Fuel level, fuel filler flap location indicator, range

ⓘ In addition to the multifunction display (2), further content can be shown on displays (1) and (3) (→ page 271).

The segments on speedometer (1) indicate the system status for the following:

- Cruise control(→ page 212)
- Limiter (→ page 213)
- Active Distance Assist DISTRONIC (→ page 216)

! NOTE Engine damage due to excessively high engine speeds

The engine will be damaged if you drive with the engine in the overrevving range.

▶ Do not drive with the engine in the overrevving range.

The fuel supply will be interrupted to protect the engine when the red mark on the rev counter (overrevving range) is reached.

Vehicles with a widescreen cockpit: during normal operating conditions, coolant temperature display (4) may rise to 120 °C.

⚠ WARNING Danger of burns when opening the bonnet

If you open the engine bonnet when the engine has overheated or during a fire in the engine compartment, you could come into contact with hot gases or other escaping operating fluids.

▶ Before opening the bonnet, allow the engine to cool down.

▶ In the event of a fire in the engine compartment, keep the engine bonnet closed and call the fire service.

Overview of the buttons on the steering wheel

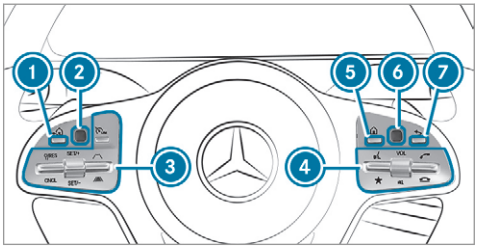

(1) Back/Home button, on-board computer
Press and hold: shows standard display

(2) Touch Control, on-board computer

(3) Control panel for cruise control/limiter or Active Distance Assist DISTRONIC

(4) Control panel for MBUX multimedia system:
LINGUATRONIC
★ Displays favourites
VOL: control knob, adjusts the volume or switches the sound off (press)

- Makes/accepts a call
- Rejects/ends a call

5 Calls up the home screen
6 Touch Control multimedia system
7 Back button

Operating the on-board computer

WARNING Risk of distraction from information systems and communications equipment

If you operate information and communication equipment integrated in the vehicle when driving, you will be distracted from the traffic situation. This could also cause you to lose control of the vehicle.

- Only operate this equipment when the traffic situation permits.
- If you cannot be sure of this, stop the vehicle whilst paying attention to road and traffic conditions and operate the equipment with the vehicle stationary.

Observe the legal requirements for the country in which you are currently driving when operating the on-board computer.

ⓘ The on-board computer displays will appear on the multifunction display (→ page 272).

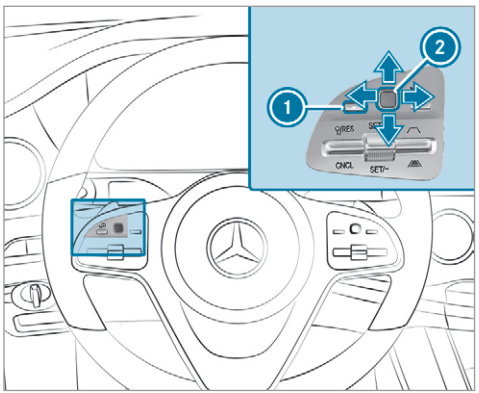

The on-board computer is operated using the left-hand Touch Control 2 and the left-hand back/home button 1.

When the on-board computer is being operated, different acoustic signals will sound as operating feedback, e.g. when the end of a list is reached or when you are scrolling through a list.

The following menus are available:

- Assistance
- Telephone
- Navigation
- Trip
- Radio
- Media
- Styles & display
- Service

The menus can be called up via the menu bar on the multifunction display.

- **To call up the menu bar:** press the back button on the left 1 until the menu bar is displayed.

ⓘ **Vehicles without Active Distance Assist DISTRONIC:** press the button to call up the menu bar of the on-board computer.

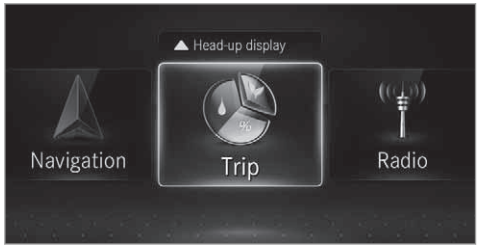

ⓘ The illustration shows the instrument display in the widescreen cockpit.

- **To scroll in the menu bar:** swipe left or right on the left-hand Touch Control (2).
- **To call up a menu or confirm a selection:** press the left-hand Touch Control (2).
- **To scroll through displays or lists on the menu:** swipe upwards or downwards on the left-hand Touch Control (2).
- **To call up a submenu or confirm a selection:** press the left-hand Touch Control (2).
- **To exit a submenu:** press the back button on the left (1).

Selecting the head-up display

- **To switch on the head-up display:** switch on the head-up display via the multimedia system or activate it in the menu bar by swiping upwards on the left-hand Touch Control (2).
  The head-up display menu has been selected on the head-up display.
- **To switch to the head-up display:** press the left-hand Touch Control (2) or swipe upwards on the left-hand Touch Control (2).
- **To select what the head-up display shows:** swipe upwards or downwards on the left-hand Touch Control (2).

Full-surface menus

Vehicles with an instrument display in the widescreen cockpit: the following menus can be shown in full on the instrument display:

- Assistance
- Trip
- Navigation

- On the corresponding menu, use the left-hand Touch Control (2) to scroll to the end of the list.
- Press the left-hand Touch Control (2).
  The selected menu will be displayed in full.

Adjusting the design of the instrument display

On-board computer:

→ Styles & display

Setting the design

- Swipe upwards or downwards on the left-hand Touch Control.
- Press the left-hand Touch Control.
  The instrument display will be shown in the selected design.

The following designs can be selected, depending on the vehicle equipment:

- Classic
- Sport
- Progressive

- Understated
- Standard displays

Showing display content on the instrument cluster

Vehicles with an instrument display in the widescreen cockpit: additional display content can be shown on the instrument cluster.

ⓘ The display content on the instrument cluster adapts to the topic selected on the multimedia system.

▶ **To select display content:** swipe to the right or left on the left-hand Touch Control.

▶ Swipe upwards or downwards on the left-hand Touch Control to select the required display content.
When the display content is selected, it will briefly be highlighted.

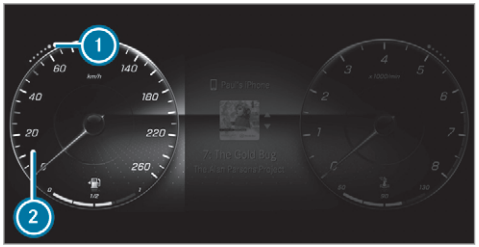

① The index points show the selected display content.

② Display content, left (example: speedometer)

When the display content is selected ②, it will briefly be highlighted.

Display content selection, left:

- Speedometer
- Time/date
- Trip computer From start and From reset
- Range
- Audio

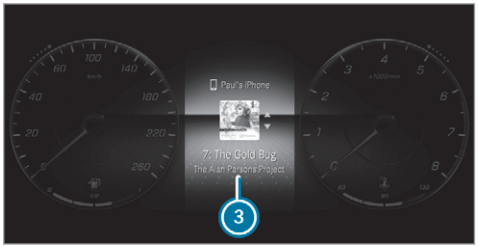

③ Display content, centre (example: media menu)
The index points show the selected menu content

The display content in the centre shows the menu content of the respective menus from the menu bar on the multifunction display.

Display content menu selection, centre:

- Assistance
- Telephone
- Navigation
- Trip

- Radio
- Media
- Styles and display
- Service

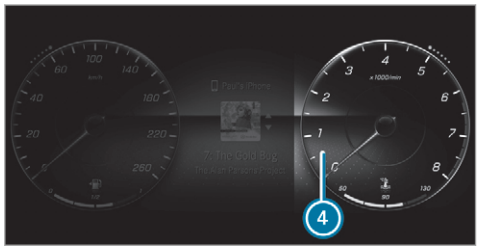

④ Display content, right (example: rev counter)

Display content selection, right:

- Rev counter
- Average fuel consumption
- ECO display
- Navigation
- G-meter
- Assistant display

Overview of displays on the multifunction display

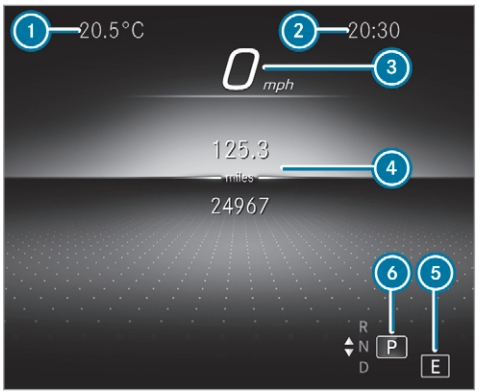

① Outside temperature
② Time
③ Digital speedometer
④ Display section
⑤ Drive program
⑥ Transmission position

ⓘ **Vehicles with standard instrument display:** the position of the displays differs from those shown here.

Further displays on the multifunction display:

- ⬆ Gearshift recommendation (→ page 182)
- Active Parking Assist (→ page 245)
- Parking Assist PARKTRONIC deactivated (→ page 235)
- Cruise control (→ page 212)
- LIM Limiter (→ page 213)
- Active Distance Assist DISTRONIC (→ page 216)
- Active Brake Assist (→ page 212)
- Active Steering Assist (→ page 223)
- Active Lane Keeping Assist (→ page 258)
- Active Lane Change Assist (→ page 225)
- ECO start/stop function (→ page 172)

HOLD HOLD function (→ page 229)

Adaptive Highbeam Assist (→ page 139)

Adaptive Highbeam Assist Plus (→ page 140)

120 km/h Maximum permissible speed exceeded (for certain countries only)

Vehicles with Speed Limit Assist: detected instructions and traffic signs (→ page 251).

Vehicles with Traffic Sign Assist: detected instructions and traffic signs (→ page 253).

Adjusting the instrument lighting

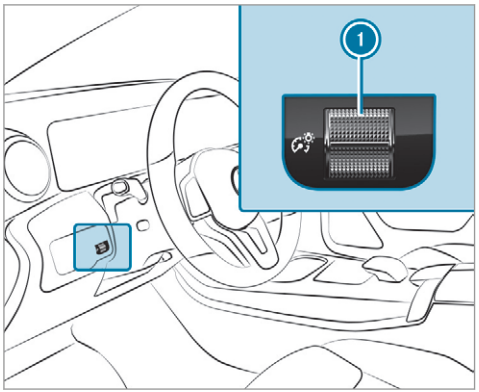

▶ Turn brightness control 1 up or down. The lighting of the instrument display and in the control elements of the vehicle interior is adjusted.

Menus and submenus

Calling up functions on the Service menu of the on-board computer

On-board computer:

→ Service

▶ **To select a function:** swipe upwards or downwards on the left-hand Touch Control.

▶ Press the left-hand Touch Control.

Functions on the Service menu:

- Message memory (→ page 537)
- AdBlue: Adblue® range and fill level
- Tyres:
  - Restart the tyre pressure loss warning system (→ page 502)
  - Check the tyre pressure with the tyre pressure monitor (→ page 497)
  - Restart the tyre pressure monitor (→ page 497)
- ASSYST PLUS: call up the service due date (→ page 454)
- Coolant: coolant temperature display

- Engine oil level: engine oil level
- Consumption info: fuel life cycle consumption

Calling up displays on the Assistance menu

On-board computer:

→ Assistance

The following displays are available on the Assistance menu:

- Assistance
- Attention level (→ page 250)
- **Vehicles with an instrument display in the widescreen cockpit:** full screen

▶ **To switch between the displays:** swipe upwards or downwards on the left-hand Touch Control.

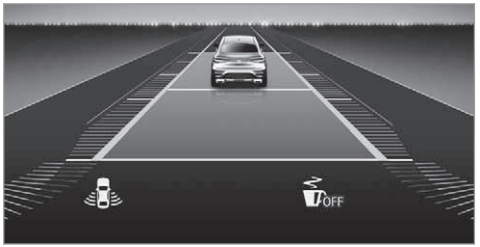

ⓘ The illustration shows the instrument display in the widescreen cockpit.

Status displays on the assistant display:

- ATTENTION ASSIST: deactivated
- Grey lane markings: Active Lane Keeping Assist activated
- Green lane markings: Active Lane Keeping Assist active
- Grey radar waves next to vehicle: Blind Spot Assist or Active Blind Spot Assist enabled
- Green radar waves next to vehicle: Blind Spot Assist or Active Blind Spot Assist active
- Active Distance Assist DISTRONIC displays (→ page 216)

Calling up displays on the Trip menu

On-board computer:

→ Trip

▶ **To select a display:** swipe upwards or downwards on the left-hand Touch Control.

Trip menu in the standard cockpit:

- Speedometer
- Rev counter
- Range and current fuel consumption
- ECO display (→ page 174)
- Trip computer From start and From reset

Trip menu in the widescreen cockpit:

- Standard display
- Current fuel consumption

- ECO display (→ page 174)
- Trip computer From start and From reset
- Full screen

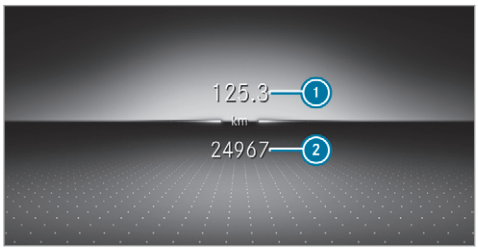

Standard display (example)

1 Trip distance
2 Total distance



Trip computer (example)

1 Total distance
2 Driving time
3 Average speed
4 Average fuel consumption

ⓘ The illustrations show the instrument display in the widescreen cockpit.

Resetting values on the Trip menu of the on-board computer

On-board computer:

↳ Trip

You can reset the values of the following functions:

- Trip distance
- Trip computer From start and From reset
- ECO display (→ page 174)

▶ **To select the function to be reset:** swipe upwards or downwards on the left-hand Touch Control.

▶ Press the left-hand Touch Control.

▶ Select Yes.

▶ Press the left-hand Touch Control.

If you press and hold the left-hand Touch Control, the values of the function will be reset immediately.

Calling up navigation instructions on the on-board computer

On-board computer:

→ Navigation

The following displays are available in the navigation menu:

- Navigation view
- Map view
- Full-surface map view

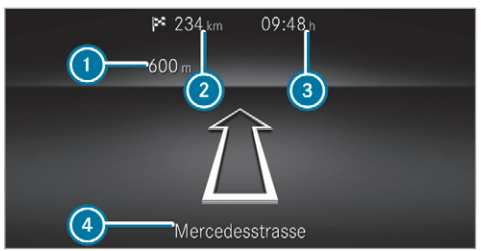

Example: no change of direction announced

1. Distance to the next change of direction
2. Distance to the next destination
3. Estimated arrival time at next destination
4. Current road

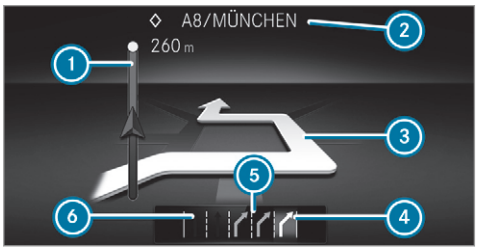

Example: change of direction announced

1. Distance to the change of direction
2. Road to which the change of direction leads
3. Change-of-direction symbol
4. Recommended lane (white)
5. Possible lane
6. Lane not recommended (dark grey)

Further possible displays on the Navigation menu:

- Direction of travel: display of direction of travel and road currently being travelled on.
- New route... or Calculating route...: a new route is being calculated.
- Road not mapped: the road is unknown, e.g. it has only recently been built.
- No route: no route could be calculated to the selected destination.
- Off map: the map for the current location is not available.
- Area of dest. reached: when an intermediate destination is reached, the intermediate destination flag will be displayed with the number of the intermediate destination. After this, route guidance will continue. Once the destination is reached, the chequered flag will be displayed. Route guidance will now be complete

▶ **To exit the menu:** press the back button on the left.

Vehicles with the MBUX multimedia system: You can also start navigation to one of the recent destinations on the Navigation menu:

- Press the left-hand Touch Control.
- **To select a destination:** swipe upwards or downwards on the left-hand Touch Control.
- Press the left-hand Touch Control. Route guidance will start.

  If route guidance has already been activated, a query will appear asking whether you wish to end the current route guidance.
- Select Yes.
- Press the left-hand Touch Control. Route guidance will start.

Selecting radio stations using the on-board computer

On-board computer:

→ Radio

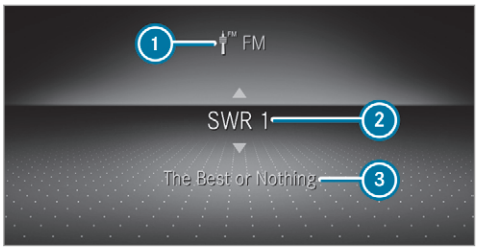

1 Frequency range
2 Station
3 Name of track

ⓘ The illustration shows the Instrument Display in the Widescreen Cockpit

When you select a station from the memory presets, the preset will appear next to the station name. When you select a saved station in the frequency range, an asterisk will appear next to the station name.

- **To select a radio station:** swipe upwards or downwards on the left-hand Touch Control.

Selecting the frequency range or memory preset

- Press the left-hand Touch Control.
- Swipe upwards or downwards on the left-hand Touch Control.
- Press the left-hand Touch Control.

Operating media playback using the on-board computer

On-board computer:

→ Media



1 Media source
2 Track number and current track
3 Name of artist (example)

ⓘ The illustration shows the Instrument Display in the Widescreen Cockpit

▶ **To change tracks on an active media source:** swipe upwards or downwards on the left-hand Touch Control.

Changing a media source

▶ Press the left-hand Touch Control.

▶ **To select a media source:** swipe upwards or downwards on the left-hand Touch Control.

▶ Press the left-hand Touch Control.

Dialling telephone numbers using the on-board computer

⚠ **WARNING** Risk of distraction from information systems and communications equipment

If you operate information and communication equipment integrated in the vehicle when driving, you will be distracted from the traffic situation. This could also cause you to lose control of the vehicle.

▶ Only operate this equipment when the traffic situation permits.

▶ If you cannot be sure of this, stop the vehicle whilst paying attention to road and traffic conditions and operate the equipment with the vehicle stationary.

When using the phone, observe the legal requirements for the country in which you are currently driving.

Requirements:

- The mobile phone is connected to the multimedia system.

On-board computer:

→ Telephone

The most recent telephone calls (dialled, received and missed calls) are displayed on the Telephone menu.

▶ **To select an entry:** swipe upwards or downwards on the left-hand Touch Control.

▶ Press the left-hand Touch Control.
If there is only one telephone number saved to an entry: the telephone number will be selected.

▶ **If there are multiple telephone numbers saved to an entry:** swipe upwards or down-

wards on the left-hand Touch Control to select the desired telephone number.

▶ Press the left-hand Touch Control.
The telephone number will be dialled.

The following displays may appear instead of the telephone numbers dialled:

- Please wait: the application is starting. If a Bluetooth® connection to the mobile phone is not established, the menu for authorising and connecting a mobile phone will be displayed on the multimedia system (→ page 400).
- Updating data: the call list is being updated.
- Importing contacts: contacts are being imported from the mobile phone or a storage medium.

Accepting/rejecting an incoming call

Vehicles with head-up display: when you receive a call, the Incoming call message will appear on the head-up display.

▶ Swipe upwards or downwards on the left-hand Touch Control and select [✆] (accept) or [✆] (reject).

▶ Press the left-hand Touch Control.

You may accept or reject the call using the [✆] or [✆] button on the steering wheel.

Setting the head-up display using the on-board computer

On-board computer:

↳ HEAD-UP DISPLAY

The following head-up display settings can be selected:

- Position
- Brightness
- Displays
- Messages
- Assistance status
- Telephone
- Audio
- LINGUATRONIC

▶ **To choose a setting:** swipe to the right on the left-hand Touch Control.
The Settings menu (5) is selected.

▶ **To call up the Settings menu:** press the left-hand Touch Control.

▶ **To adjust the position:** swipe upwards or downwards on the left-hand Touch Control.

▶ **To adjust the brightness:** swipe to the left or right on the left-hand Touch Control.

▶ **To set messages, assistance status, telephone, audio and LINGUATRONIC:** press the left-hand Touch Control.
The list of setting options will be displayed.

▶ Swipe upwards or downwards on the left-hand Touch Control and select a setting by pressing the left-hand Touch Control.

Selecting what the head-up display shows

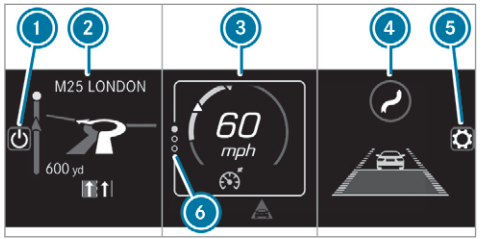

(Example)

1. To switch the head-up display on/off
2. Left display area
   - Navigation system
   - Average consumption
   - G-meter
3. Central display area
   - Set speed in the driver assistance system, e.g. cruise control
   - Warnings from driver assistance systems, e.g. distance warning
4. Right display area
   - Traffic Sign Assist
   - Assistant display
5. To select the settings
6. Index points

Display areas 2 to 4 that are not required can be hidden.

ⓘ In audio mode, the station name, track or last calls will be shown temporarily when the audio source is being actively operated.

▶ **To select a display:** swipe upwards or downwards on the left-hand Touch Control.

Head-up Display

Function of the head-up display

The head-up display projects information above the cockpit into the driver's field of vision, e.g. the speed of the vehicle, information from the navigation system or driver assistance systems and some warning messages.

Depending on the vehicle's equipment, different content can be shown in the three display areas of the head-up display (→ page 279).

Display elements

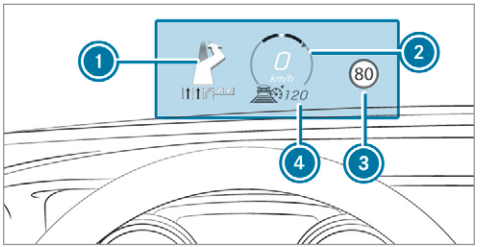

1. Navigation instructions
2. Current speed
3. Detected instructions and traffic signs
4. Set speed in the driver assistance system (e.g. cruise control)

System limits

The visibility of the displays will be affected by the following conditions:

- Seat position
- image position setting
- light conditions

- wet carriageways
- objects on the display cover
- polarisation in sunglasses

ⓘ In extreme sunlight, sections of the display may appear washed out. You can correct this by deactivating and reactivating the head-up display.

Switching the head-up display on/off via the multimedia system

Multimedia system:

→ ⌂ » Settings » Quick access

▶ Select HUD.
The head-up-display is activated.

Notes on operating safety

WARNING Risk of distraction from information systems and communications equipment

If you operate information and communication equipment integrated in the vehicle when driving, you will be distracted from the traffic situation. This could also cause you to lose control of the vehicle.

- Only operate this equipment when the traffic situation permits.
- If you cannot be sure of this, stop the vehicle whilst paying attention to road and traffic conditions and operate the equipment with the vehicle stationary.

WARNING Risk of an accident from operating mobile communication equipment while the vehicle is in motion

Mobile communications devices distract the driver from the traffic situation. This could also cause the driver to lose control of the vehicle.

- As the driver, only operate mobile communications devices when the vehicle is stationary.
- As a vehicle occupant, only use mobile communications devices in the areas intended for this purpose, e.g. in the rear passenger compartment.

WARNING Risk of injury due to objects being stowed incorrectly

If objects in the vehicle interior are stowed incorrectly, they can slide or be thrown around and hit vehicle occupants. In addition, cup holders, open stowage spaces and mobile phone receptacles cannot always retain all objects they contain.

There is a risk of injury, particularly in the event of sudden braking or a sudden change in direction.

- Always stow objects so that they cannot be thrown around in such situations.
- Always make sure that objects do not protrude from stowage spaces, luggage nets or stowage nets.
- Close the lockable stowage spaces before starting a journey.
- Always stow and secure heavy, hard, pointed, sharp-edged, fragile or bulky objects in the boot/load compartment.

For your own safety, always observe the following points when operating mobile communications equipment and especially your voice control system:

- Observe the legal requirements for the country in which you are driving.
- While driving, only operate mobile communications equipment and your voice control system when the traffic conditions permit it. You may otherwise be distracted from the traffic conditions and cause an accident, injuring yourself and others.

- If you use the voice control system in an emergency your voice can change and your telephone call, e.g. an emergency call, can thereby be unnecessarily delayed.
- Familiarise yourself with the voice control system functions before starting the journey.
- Comply with the loading guidelines (→ page 112).

Operation

Overview of operating the multifunction steering wheel

LINGUATRONIC is operational approximately thirty seconds after the ignition is switched on.

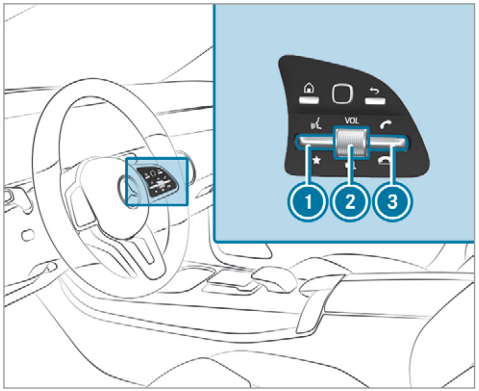

1. Press the rocker switch up: starts the dialogue
2. Press the control knob: switches the sound off or on (ends the dialogue)
   Turn the control knob up/down: increases/decreases the volume
3. Press the rocker switch down: rejects/ends a call (ends the dialogue)

Conducting a dialogue

For the dialogue with LINGUATRONIC, you can use complete sentences of colloquial language as voice commands, such as, for example, "Please show me the list of the last calls" or "How warm is it outside?". It is not necessary to first change to the relevant application such as "Telephone" or "Vehicle function".

- **To activate or continue dialogue by using a keyword:** say "Hello Mercedes" to activate LINGUATRONIC. Voice activation must be switched on in the multimedia system (→ page 285). For this, it is not necessary to press up the rocker switch on the multifunction steering wheel.
  Voice activation can also be directly combined with a voice command, e.g. "Hi Mercedes, how fast can I drive?".

or

- Press the rocker switch up on the multifunction steering wheel.
  You can say a voice command after an acoustic signal.

- **To correct an entry:** say the Correction voice command.
- **To select an entry from the selection list:** say the line number or the contents.
- **To browse the selection list:** say the Next or Back voice command.
- **To interrupt the dialogue:** say the Pause voice command.
  The dialogue can be continued with the "Hello Mercedes" voice command or by pressing up the rocker switch on the multifunction steering wheel.
- **To jump to the preceding dialogue:** say the Back voice command.
- **To jump back to the top dialogue level:** say the Home voice command.
- **To cancel the dialogue:** say the Close voice command or press the or button on the multifunction steering wheel.
- **To interrupt a voice output:** speak in the middle of a voice dialogue when the system is still answering.
  The voice output is shortened and the conclusion is reached more quickly.

ⓘ The Voice barge-in option must be switched on in the multimedia system for this (→ page 285).

Overview of operable functions in LINGUATRONIC

You can use the LINGUATRONIC voice control system to operate the following functions depending on the vehicle equipment:

- Telephone
- Text message and e-mail
- Navigation
- Address book
- Radio
- Media
- Vehicle functions
- Weather

Full functionality is only available for you with activation of online voice control (→ page 285).

Notes on the language setting

You can change the language of LINGUATRONIC via the system language settings. If the set system language is not supported by LINGUATRONIC, English will be selected.

LINGUATRONIC is available in the following languages:

- German
- English
- French
- Italian
- Dutch
- Polish
- Portuguese
- Russian
- Swedish
- Spanish
- Czech

- Turkish

Setting LINGUATRONIC (multimedia system)

Requirements:

- **For online voice control:** your vehicle is connected with your Mercedes me user account (→ page 425).
- There is an Internet connection (→ page 429).
- **For online use of contacts:** online voice control is activated.

Multimedia system:

↴ ⌂ ▸▸ Settings ▸▸ System ▸▸ LINGUATRONIC

Switching voice activation of LINGUATRONIC on/off

▶ Select Voice activation "Hi Mercedes". Depending on the previous status, the function is activated or deactivated.

When the function is active, the "Hi Mercedes" voice command can activate the dialogue.

Activating/deactivating online voice control

▶ Activate Online recognition.

ⓘ Online voice control is activated at the factory.

▶ Select Online recognition subscrip.. You will be connected with the Mercedes me portal.

▶ Activate online voice control in the Mercedes me portal.

Activating contacts for online use

▶ Select Contact upload for online recognition. When the function is active, contacts will be found more easily and accurately using voice input. The quality of the enunciation of contact names by the system will also be improved.

Switching on voice interruption

▶ Select Voice barge-in. If the function is active, a command can be interjected during voice output of the system.

Using LINGUATRONIC effectively

LINGUATRONIC audible help functions

Using the corresponding voice commands you receive the following information and assistance in the following cases:

- **For optimal operation:** say the Voice control tutorial voice command or call up the Digital Owner's Manual with Could you go to the LINGUATRONIC tutorial please?, for example. The full extent of the Digital Owner's Manual is available when the vehicle is stationary. Here you can also find explanatory videos which introduce you to the functions of LINGUATRONIC.
- **Current application:** on the multifunction steering wheel, press the  rocker switch up and say the Help voice command. You will

receive suggestions and information about operation of LINGUATRONIC for the current application.

- **Continued dialogue:** say the Help voice command during a voice dialogue. For every step of the dialogue you receive matching information.
- **Specific function:** say the voice command for the desired function, e.g. with "Hello Mercedes, I need help with the radio" or after pressing the rocker switch on the multifunction steering wheel up, say the Help for the telephone voice command, for example.

Notes on optimal use of LINGUATRONIC

Notes on how to improve recognition:

- Activate online voice control (→ page 285).
- Only operate LINGUATRONIC from the driver's seat.
- Say the voice commands coherently and clearly, but do not exaggerate the words.
- Avoid loud noises that cause interference while making a voice command entry, e.g. the entertainment in the rear-passenger compartment.
- **For telephone or address book entries:**
  - Only create sensible address book entries in the system/mobile phone, e.g. enter surname and first name in the correct field.
  - Do not use any abbreviations, unnecessary spaces or special characters.
- **For radio programme names:** say the Read out station list voice command and say the desired station name in the way the voice output reads aloud to you.

ⓘ To improve recognition, depending on the outside temperature, either the blowers for ventilation or heating are reduced when LINGUATRONIC is started.

Notes on online voice control

Online voice control improves recognition and makes additional results available as a result of external information, e.g. information about POIs and about the weather. We therefore recommend that you activate online voice control.

You will need a Mercedes me user account for this. If you do not yet have a user account you have to create one and connect it with your vehicle (→ page 425).

Then call up your Mercedes me user account. The Mercedes me services are shown and can be activated (→ page 425).

In addition, online voice control must be activated (→ page 285).

Essential voice commands

Notes on the voice commands

Aside from the exact voice commands (see the "Voice command" column in the following tables) to call up specific functions, in most cases LINGUATRONIC also understands a great many paraphrases from daily usage. Examples of these are listed in the "Colloquial examples" column. For some languages however these examples are only available to a limited extent.

ⓘ Content in angled brackets, e.g. <POI> or <contact>, is a placeholder which has to be completed by you with the desired term. The voice command Set <POI> as intermediate destination could, for example, be completed with: Set Mercedes-Benz Arena as intermediate destination.

Overview of switch voice commands

Switch voice commands can be used to open certain applications.

Switch voice commands

Voice command	Colloquial example	Function
Switch to navigation	I would like to go to navigation	Switches to navigation
Switch to address book	I would like to switch to the address book	Switches to the address book
Switch to telephone	I would like to switch to the phone	Switches to the telephone
Switch to messages	Can you switch to messages please?	Switches to the text message application.
Switch to e-mail	I would like to go to the e-mail application	Switches to the e-mail application
Switch to radio	I would like to switch to the radio	Switches to radio
Switch to media	I would like to switch to the media application	Switches to media

Voice command	Colloquial example	Function
Switch to comfort	I would like to go to the comfort application	Switches to the comfort settings
Switch to vehicle info	I would like to go to the vehicle application	Switches to vehicle information
Switch to settings	I would like to go to the settings menu	Switches to the menu with the setting options

ⓘ It is not necessary to first call up a menu in order to operate a function it contains with LINGUATRONIC. You can operate the function directly using voice input, e.g. call a contact or enter a destination for navigation.

You can find further information in the overview tables for voice commands.

Overview of navigation voice commands

Using the navigation voice commands you can enter POIs and conventional addresses or navigate to your own contacts. You can also carry out important navigation settings directly. The following list offers just a small selection of the possible navigation commands. You will receive additional suggestions if you say Help for navigation.

Navigation voice commands

Voice command	Colloquial example	Function
Navigate to <address>	Navigate to Cambridge in the King Street	Starts route guidance to the desired address.
Navigate to <contact>	Drive/bring me to the contact address of John Smith	Starts route guidance to a contact from the address book.
Navigate to <3 word address>	The example is for the German language: Drive to Tapfer.Gebäude.Verliehen	Starts route guidance to a 3 word address from what3words. The example mentioned navigates you to the Brandenburg Gate. Observe the following information: • 3 word addresses are language dependent. • Searching for a destination using 3 word addresses is not possible in all countries and in all languages. Additional information on 3 word addresses from what3words can be found in the Navigation section under "Entering the destination as a 3 word address". The Brandenburg Gate, for example, has the following 3 word addresses: • German: **tapfer.gebäude.verliehen** • English: **that.lands.winning** • French: **posteaux.bobineur.ombrant**

Voice command	Colloquial example	Function
Home	I would like to go home/I want to drive to my home address	Starts route guidance to the home address.
Work	I would like to navigate to work	Starts route guidance to work.
Enter POI	Take me to a POI	Enters a POI, e.g. Brandenburg Gate.
Navigate to <POI>	Navigate to "McDonald's"	Starts route guidance to a POI.
Navigate to the online POI <POI>	Navigate to online POI "McDonald's	Searches online for a POI and starts route guidance.
Start route guidance	Begin route guidance/Can you start route guidance?	Starts route guidance to a destination.
Cancel route guidance	Can you quit route guidance?	Cancels route guidance.
Restart route guidance	I would like to resume route guidance	Continues route guidance after a break.
Set <address> as intermediate destination	Set "Stratton Road in Swindon" as an intermediate destination	Selects an intermediate destination for the route.
Set <contact> as intermediate destination	Set "John Smith" as intermediate destination	Selects an intermediate destination from the contacts for the route.

Voice command	Colloquial example	Function
Set <POI> as intermediate destination	Set "Buckingham Palace" as an intermediate destination	Selects a POI as an intermediate destination for the route.
Enter address in <country>	I would like to enter a new address in "France"	Selects a destination in another country.
Enter postcode	Start route guidance to a new postcode	Enters a postcode.
Last destinations	Show the previous destinations	Selects a destination from the previous destinations.
Show alternative routes	Search for alternative routes	Shows one of the alternative routes calculated.
Driving recommendations on	Switch on driving recommendations	Switches on voice output for route guidance.
Driving recommendations off	Mute the driving instructions	Switches off voice output for route guidance.
Show traffic map	Switch on traffic jam info	Displays traffic information on the map.
Hide traffic map	Switch off the traffic jam messages	Hides the traffic information.
POI icons on	Show me point of interest icons on the map please	Displays the POI symbols on the map.
Hide POI icons	I would like to hide all POI symbols	Hides the POI symbols.

Overview of telephone voice commands

You can use the telephone voice commands to make phone calls or search through the address book. The following list offers just a small selection of the possible telephone commands. You will receive additional suggestions if you say Help for phone.

Telephone voice commands

Voice command	Colloquial example	Function
Call <telephone number>	I would like you to dial 0171xxxxxxx	Makes a telephone call by entering the telephone number directly.
Call <contact>	Call Jane Smith on her mobile	Makes a telephone call directly by entering a name from the address book.
Call Mercedes-Benz emergency call centre	Could you call the Mercedes-Benz emergency centre?	Triggers an emergency call to the Mercedes-Benz emergency call centre.
Call Mercedes me	I'd like you to call the MB breakdown assistance please	Places a call with Mercedes-Benz breakdown assistance.
Latest calls	Show me the list of missed calls	Shows the list of missed calls.
Previous calls	Show me the last calls	The list shows all outgoing, incoming and missed calls.
Incoming calls	Show me the calls received	Shows the list of incoming calls.
Outgoing calls	Show me the list of outgoing calls	Shows the list of outgoing calls.

Voice command	Colloquial example	Function
Search for <contact>	Could you open the contact "John Smith"?	Opens the contact data of a contact in the address book.
Redial	Redial/Call last phone number	Makes a call to the last telephone number dialled.
Change phone	Could you please switch to the second phone?	Changes the primary telephone

Overview of radio voice commands

Radio voice commands can also be used when the radio application runs in the background and another application is visible in the foreground. The following list offers just a small selection of the possible radio voice commands. You will receive additional suggestions if you say Help for radio.

Radio voice commands

Voice command	Colloquial example	Function
Station <station name>	I would like to select station "Cool FM"	Selects the radio station.
Radio frequency <Frequency>	Go to station/radio frequency "eighty seven point five megahertz".	Enters a radio frequency, e.g. in the FM waveband.
Next radio station	Call up the next radio station	Calls up the next radio station from the station list.

Voice command	Colloquial example	Function
Previous station	Switch to the last radio station/to the previous program	Switches to the previous radio station.
Save radio station	Save the radio station, please	Saves the radio station currently playing.
Show station list	Please show me the list of all radio stations	Shows the radio list with the radio stations that can currently be received.
Read out radio station list	Please read out the radio program	Reads out the radio list with the radio stations that can currently be received.
Traffic information on	Switch on the traffic info	Switches on traffic announcements.
Traffic information off	I'd like to switch off traffic info	Switches off traffic announcements.
Radio info on	I want you to turn on additional radio station text	Switches on the radio text information for the radio station currently playing.
Radio info off	I want you to turn off additional radio station text	Switches off the radio text information for the radio station currently playing.
Change to radio favourites	Please show me the list of all favourite radio stations	Shows the favourites with the saved radio stations.

Overview of media player voice commands

Media player voice commands can also be used when the media player application runs in the background and another application is visible in the foreground. The following list offers just a small selection of the possible media player voice commands. You will receive additional suggestions if you say Help for media or Help for player.

Media player voice commands

Voice command	Colloquial example	Function
Play <track/albums/artists/ composers/music genres>	Play "Yellow Submarine"	The names of all available tracks, albums, artists, composers or genres are accepted during the search. In the case of a clear search result the track found is played back immediately.
Play track <track>	Play song "So What"	The available tracks are played back.
Play album <album>	Play album "A Night at the Opera"	The available albums are played back.
Play artist <artist>	I want to listen to the artist "Madonna"	The available artists are played back.
Play composer <composer>	I'd like to hear the composer "Ludwig van Beethoven"	The available composers are played back.
Play music genre <music genre>	I'd like to hear the music genre "Bebop"	The available music genres are played back.

Voice command	Colloquial example	Function
Search for track <track>	I would like to search for the song "Sailing"	The names of all available tracks are accepted during the search. A selection list appears from which you can select the desired music. If you wish to play all the tracks in a selection list, say "Play all tracks".
Search for album <album>	Search for album "A Night at the Opera"	The names of all available albums are accepted during the search. A selection list appears from which you can select the desired music. If you wish to play all the tracks in a selection list, say "Play all tracks".
Search for artist <artist>	I would like to search for the artist "Elton John"	The names of all available artists are accepted during the search. A selection list appears from which you can select the desired music. If you wish to play all the tracks in a selection list, say "Play all tracks".
Search for composer <composer>	Search for composer "Beethoven"	The names of all available composers are accepted during the search. A selection list appears from which you can select the desired music. If you wish to play all the tracks in a selection list, say "Play all tracks".
Search for music genre <music genre>	Search for music genre "Pop"	The names of all available music genres are accepted during the search. A selection list appears from which you can select the desired music. If you wish to play all the tracks in a selection list, say "Play all tracks".
Next track	Start the next song/video clip/film	Plays back the next track.
Previous track	Play the last song/track/clip again	Plays back the previous track.
Repeat this track	I'd like to listen to this track again	The current track is played back from the beginning.

Voice command	Colloquial example	Function
Play similar music	I'd like to hear similar music	Plays back similar tracks.
Play random music	Play me a random track	Plays back random tracks.
Random playback on	Turn random playback on	Switches to random mode.
Random track list off	Switch off shuffle mode	Switches off random mode.
What am I listening to?	Which music is currently playing?	The information about the track currently playing is read aloud.

Overview of message voice commands

Messages can be created, edited and listened to using the message voice commands. The following list offers just a small selection of the possible message commands. You will receive additional suggestions if you say Help for messaging.

Message voice commands

Voice command	Colloquial example	Function
Text message to <Name>	I would like to write a new text to "John Smith's mobile number"	Creates a text message. All address book names are available.
Text message to <Name> <Text>	I would like you to write a new text to "Jane Smith" with the following text: "I am running late"	Writes a text message to the person mentioned. The content of the text can be spoken immediately if online voice control has been activated.

Voice command	Colloquial example	Function
Read out new text messages	I would like you to read out the new text messages	Reads out new text messages.
Read out the last text message from <Name>	I would like you to read out the last text message from "John Smith"	Reads out the last text message from the person mentioned.
E-mail to <Name>	I would like to write a new e-mail to "John Smith, office"	Creates an e-mail.
E-mail to <Name><Text>	I would like to write an e-mail to "John Smith, private" with the following text: "Running late".	Writes an email message to the person mentioned. The content of the text can be spoken immediately if online voice control has been activated.
Forward e-mail to	I would like you to forward this e-mail to "John Smith"	Forwards the selected or open e-mail.
Read out new e-mails	I would like you to read out the new email	Reads out the new e-mails.
Read out the last e-mail from <Name>	I would like you to read out the last email from my wife	Reads out the last e-mail from the person mentioned.
E-mail in English to <Name>	Write a mail in English to John Smith	Writes an email in English to the person mentioned.

Overview of vehicle voice commands

You can use the vehicle voice commands to directly call up the corresponding menus for the vehicle settings and operate vehicle functions.

The following list offers just a small selection of the possible vehicle voice commands. You will receive additional suggestions if you say Help for vehicle settings or Help for vehicle functions.

ⓘ If no seat or side is mentioned for commands that relate to a seat or side of vehicle then all actions are carried out automatically for the driver's seat.

Vehicle voice commands

Voice command	Colloquial example	Function
Temperature colder	I would like to reduce the temperature	Lowers the temperature of the air conditioning system.
Air recirculation on	I would like to activate the air circulation	Switches on air recirculation mode for the air conditioning system.
Automatic climate control driver on	I would like to switch on the automatic climate control for the driver's seat	Switches on automatic climate control for the driver's or front passenger side.
Ambient light blue	I would like to set the interior lighting to blue	Switches the ambiance light, e.g. to blue.
Wave massage driver on	I would like to switch on the wave massage for the driver's seat	Switches on the wave massage for the driver's or front passenger seat.

Voice command	Colloquial example	Function
Massage driver's seat off	Switch the driver's side massage off	Switches off the massage function for the driver's or front passenger seat.
Seat heating driver on	I would like to switch on the seat heating for the driver's seat	Switches on the seat heating for the driver's or front passenger seat.
Seat heating front passenger level 2	Seat heating front-passenger on level 2	Sets the seat heating for the driver's or front passenger seat to level 2.
Current speed limit	I would like to hear the speed limit	Calls up the current speed limit.
Outside temperature	I would like to find out what the temperature outside is like	Calls up the outside temperature.
Average consumption	What is the current average consumption?	Calls up average consumption.
Vehicle data	Can you please display the vehicle data menu?	Calls up the vehicle data.
Range	Tell me the current range	Calls up the current range data.
Assistance menu	Show me the driver assistance settings	Displays the assistance settings.

Voice command	Colloquial example	Function
Climate control menu	I would like to see the climate control menu	Displays the climate control settings.
Light menu	I would like to change the light settings	Displays the light settings.
Seats menu	I would like to switch to seat menu	Displays the seat adjustment settings.
Massage menu	I would like to switch to the massage seat menu	Displays the massage settings.
Next service	Tell me my next service appointment	Calls up the next service due date.

Overview and operation

Overview of the MBUX multimedia system

WARNING Risk of distraction from information systems and communications equipment

If you operate information and communication equipment integrated in the vehicle when driving, you will be distracted from the traffic situation. This could also cause you to lose control of the vehicle.

- Only operate this equipment when the traffic situation permits.
- If you cannot be sure of this, stop the vehicle whilst paying attention to road and traffic conditions and operate the equipment with the vehicle stationary.

You must observe the legal requirements for the country in which you are currently driving when operating the multimedia system.

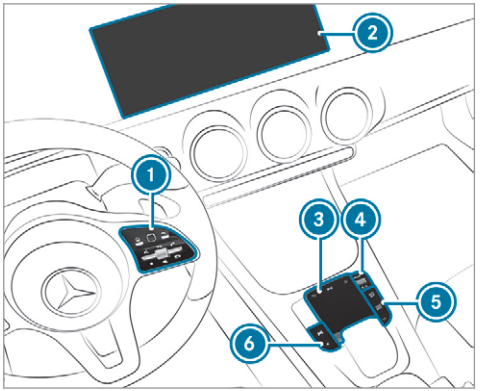

1. Touch Control and control panel for the MBUX multimedia system
   Operating Touch Control(→ page 305)
2. Media display with touch functionality
   Home screen overview(→ page 304)
   Operating the touchscreen (→ page 306)
3. Touchpad
   Operating the touchpad(→ page 307)
4. Control knob
   Press and hold: switches the multimedia system or media display on or off
   Press briefly: switches the mute function on/off
   Turn: adjusts the volume
5. Buttons for navigation, radio/media and telephone
   Calling up applications (→ page 315)
6. Buttons for vehicle functions/system settings and favourites/themes
   Calling up applications (→ page 315)

You can operate the MBUX multimedia system with these control elements:

- Touch Control 1 and touchpad 3
  The operation for both control elements is achieved by cursor control.
- Media display 2

ⓘ Alternatively, you can conduct a dialogue with LINGUATRONIC (→ page 283).

Numerous application, online services, services and apps are available for you. You can call

these up using the home screen or using buttons 5 and 6 next to the touchpad.

You can conveniently call up and add favourites using the ★ rocker switch on the steering wheel or using the ★ button next to the touchpad. Quick-access in the home screen and in the applications serve to select functions more quickly.

If you use the learn function of the multimedia system, you will receive suggestions during operation of the most probable navigation destinations, radio stations and contacts. The configuration of the suggestions takes place in your profile. You can compile your profile from various vehicle settings and settings of the multimedia system. You can create themes for various driving situations in the home screen as well as using the ★ rocker switch or the ★ button.

The Notifications Centre collects incoming notifications, e.g. about an available software update. Depending on the type of notification it offers various actions. You can call up the Notifications Centre on the home screen and in the application menus.

With the global search in the vehicle you can search on-board across many categories as well as online in the Internet. You can use the global search in the home screen and in the notifications.

Anti-theft protection

This device is equipped with technical provisions to protect it against theft. More detailed information about anti-theft protection can be obtained at a qualified specialist workshop.

Notes on the media display

Observe the notes on caring for the interior (→ page 469).

Automatic temperature-controlled switch-off feature: if the temperature is too high, the brightness is initially reduced automatically. The media display may then switch off completely for a while.

ⓘ If you are wearing polarised sunglasses, it may be difficult to read the multimedia system display.

Home screen overview

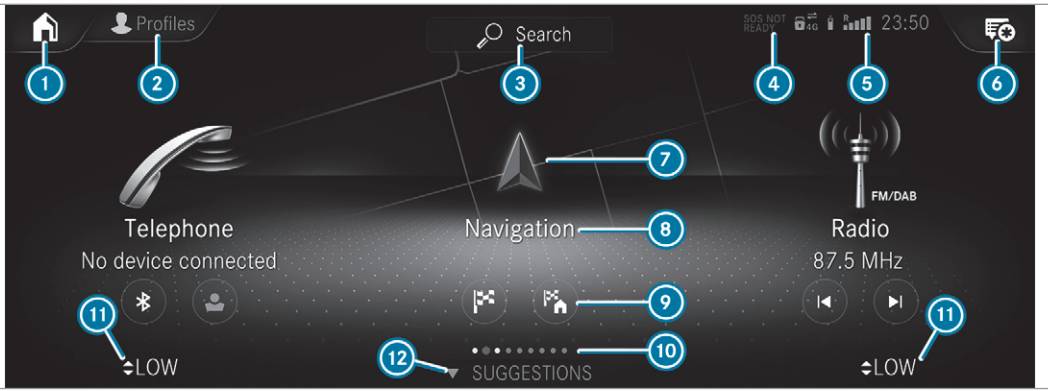

1. On the home screen: displays the first three applications
   In other displays: calls up the home screen
2. Calls up the profile
3. Calls up the global search
4. SOS NOT READY display only when the Mercedes-Benz emergency call system is not available
5. Displays, for example network display, battery status of the mobile phone connected, signal strength of the mobile phone network, time
6. Calls up the Notifications Centre
   The star indicates new notifications.
7. Calls up an application using the symbol
8. Name of the application, beneath the current selection or information
9. Quick-access (in the example: calls up destination entry, enters the destination address for home)
10. Number of applications and currently selected display area

⑪ Calls up the air conditioning menu (→ page 156)
⑫ Calls up SUGGESTIONS, THEMES and FAVOURITES

Central control elements overview

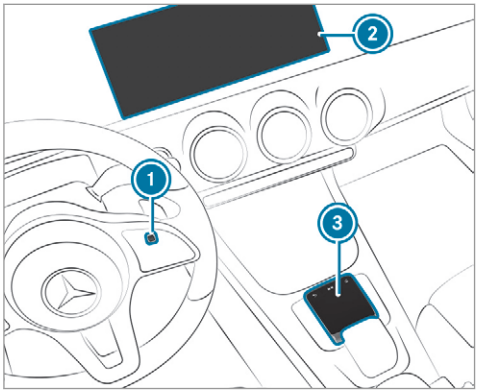

① Touch Control
② Media display with touch functionality
③ Touchpad

Touch Control

Operating Touch Control (MBUX multimedia system)

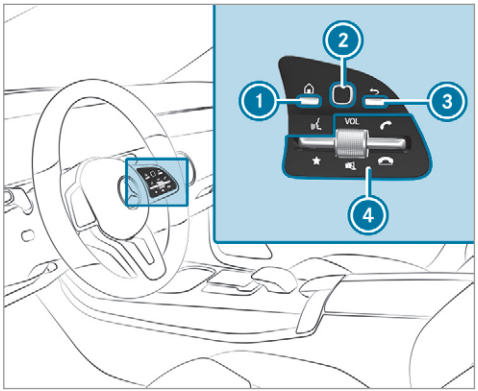

① ⌂ button
Shows the home screen and calls up applications

Shows suggestions, themes and favourites: when the home screen is shown, swipe down on Touch Control (2).

(2) Touch Control

(3) ⮌ button
Pressing briefly: returns to the previous display

(4) Control panel for MBUX multimedia system:
★ rocker switch
Press down briefly: shows favourites
Press down and hold: adds favourites and themes
Control knob
Turn: adjusts the volume VOL
Press: switches off the sound 🔇
✆ rocker switch
Press up: makes or accepts a call
✆ rocker switch
Press down: rejects or ends a call

You can navigate in menus and lists via the touch-sensitive surface of Touch Control (2) by using **a single-finger swipe**.

- **To select the menu item or entry:** swipe up, down, left or right.
- Press Touch Control (2).
- **To enter a character:** enter a character using the keyboard.
- **To move the digital map:** swipe in any direction.

Setting the sensitivity for the Touch Control
Multimedia system:
⮑ ⌂ » Settings » System » Controls » Touch Control sensitivity

- Select Fast, Medium or Slow.

Setting acoustic operating feedback for the Touch Control
Multimedia system:
⮑ ⌂ » Settings » System » Controls

The function is supported by the selection in a list.

- Select Acoustic operating feedback.
- Set Normal, Loud or Off.
If the function is activated you will hear a clicking sound when scrolling in a list. When the beginning or end of the list is reached you will hear another clicking sound.

Touchscreen

Operating the touchscreen

Tapping

- **To select a menu item or entry:** tap on a symbol or an entry.
- **To increase the map scale:** tap twice quickly with one finger.
- **To reduce the map scale:** tap with two fingers.
- **To enter characters with the keypad:** tap on a button.

Single-finger swipe

- **To navigate in menus:** swipe up, down, left or right.

- **To move the digital map:** swipe in any direction.
- **To use handwriting to enter characters:** write the character with one finger on the touchscreen.

Two-finger swipe

- **To zoom in and out of the map:** move two fingers together or apart.
- **To enlarge or reduce the size of a section of a website:** move two fingers together or apart.
- **To turn the map:** turn anti-clockwise or clockwise using two fingers.

Touching, holding and moving

- **To move the map:** touch the touchscreen and move your finger in any direction.
- **To set the volume on a scale:** touch the touchscreen and move the finger to the left or right.

Touching and holding

- **To save the destination in the map:** touch the touchscreen and hold until a message is shown.
- **To call up a global menu in the applications:** touch the touchscreen and hold until the OPTIONS menu appears.

Setting acoustic operation feedback for the touchscreen

Multimedia system:

→ ⌂ ▸▸ Settings ▸▸ System ▸▸ Controls

The function is supported by the selection in a list.

- Select Acoustic operating feedback.
- Set Normal, Loud or Off.
  If the function is activated you will hear a clicking sound when scrolling in a list. When the beginning or end of the list is reached you will hear another clicking sound.

Touchpad

Operating the touchpad

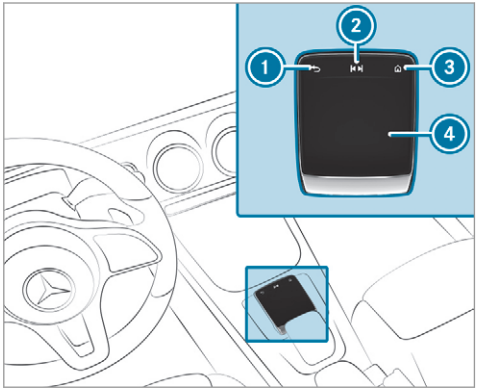

1. ⮌ button
   Pressing briefly: returns to the previous display
2. ⏮⏭ button
   Pressing: calls up the control menu of the last active audio source

Swiping to the left of right across ⏮⏭: selects the previous or next radio station/ music track

③ ⌂ button
Pressing: shows the home screen and calls up applications

④ Touchpad

ⓘ Calls up suggestions, themes and favourites: when the home screen is shown, swipe down on touchpad ④.

You can navigate in menus and lists via the touch-sensitive surface of touchpad ④ by using **a single-finger swipe**.

- **To select the menu item or entry:** move the selection by swiping up, down, left or right.
- Confirm the selection by pressing on touchpad ④.

or

- If Touchpad tap is activated, tapping is sufficient (→ page 308).
- **To enter a character:** select a character on the keyboard (→ page 330).

or

- Write a character on the touchpad with handwriting input.
- **To move the digital map:** when the digital map is shown with the navigation menu, swipe up with one finger.
- Press the touchpad.
The digital map can be moved.
- Swipe in all directions.

Use the following functions with a two-finger swipe:

- **To call up the Notifications Centre:** swipe down with two fingers.
- **To close the Notifications Centre:** swipe up with two fingers.
- **To call up the control menu of the last active audio source:** swipe up with two fingers.
- **To zoom in and out of the map:** move two fingers together or apart.
- **To enlarge or reduce the size of a section of a website:** move two fingers together or apart.

Setting the sensitivity for the touchpad
Multimedia system:
⌂ ▸▸ Settings ▸▸ System ▸▸ Controls ▸▸ Touchpad sensitivity

- Select Fast, Medium or Slow.
- **To set the pressure sensitivity:** switch Touchpad tap on or off.
If the function is switched on, a tap on the touchpad is enough to select a menu item.

Switching the read-aloud function for handwriting recognition on/off
Requirements:

- The multimedia system is equipped with a voice control system.
- The read-aloud function is available for the selected system language.

Multimedia system:

↪ ⌂ ▸▸ Settings ▸▸ System ▸▸ Audio

- Switch Read out handwriting recognition on or off.
  If the function is activated, characters are read aloud as they are written on the touchpad.

Activating/deactivating haptic operating feedback for the touchpad

Multimedia system:

↪ ⌂ ▸▸ Settings ▸▸ System ▸▸ Controls

The function supports you when making entries on the touchpad and when selecting menus.

- Switch Haptic operating feedback on or off.
  When the function is activated, a tactile feedback in the form of a vibration is effected when the touchpad is operated.

Setting acoustic operating feedback for the touchpad

Multimedia system:

↪ ⌂ ▸▸ Settings ▸▸ System ▸▸ Controls

The function is supported by the selection in a list.

- Select Acoustic operating feedback.
- Set Normal, Loud or Off.
  If the function is activated you will hear a clicking sound when scrolling in a list. When the beginning or end of the list is reached you will hear another clicking sound.

Selecting a station and track using the touchpad

- Swipe to the left or right over the ⏮⏭ button.
  Radio: the previous or next station is set.
  Media source: the previous or next track is selected.

or

- **To show the control menu:** press the ⏮⏭ button on the touchpad.

or

- Swipe upwards using two fingers on the touchpad.
  The control menu appears for the audio source that was last selected.
- Swipe left or right using one finger.
  Radio: the previous or next station is set.
  Media source: the previous or next track is selected.
- **To hide the control menu:** swipe down on the touchpad using two fingers.

MBUX Interior Assistant

Notes on lasers and laser classification

⚠ **WARNING** Risk of injury from laser radiation from the camera

This product uses a laser system. If the housing is opened or damaged, invisible laser

beams can escape in an uncontrolled manner.

Laser radiation can damage your retina.

- Do not open the housing.
- Always have maintenance work and repairs carried out by a qualified specialist workshop.

This device is a class 1 laser product in accordance with DIN EN 60825-1:2014

⚠ WARNING Risk of distraction from information systems and communications equipment

If you operate information and communication equipment integrated in the vehicle when driving, you will be distracted from the traffic situation. This could also cause you to lose control of the vehicle.

- Only operate this equipment when the traffic situation permits.
- If you cannot be sure of this, stop the vehicle whilst paying attention to road and traffic conditions and operate the equipment with the vehicle stationary.

You must observe the legal requirements for the country in which you are currently driving when operating the multimedia system.

Overview of the MBUX Interior Assistant

If the vehicle is fitted with the MBUX Interior Assistant, selected functions of the multimedia system can be operated contact-free. In addition, the reading light or search light can be switched on or off contact-free.

The MBUX Interior Assistant can differentiate between driver and front passenger interactions.

The MBUX Interior Assistant recognises certain hand positions (poses).

The MBUX Interior Assistant supports the following interactions:

Interaction area	Interaction	Description
In front of the media display/above the touchpad	Proximity to the control element	The MBUX Interior Assistant recognises the approach of the hand towards a control element. Depending on the active application, the display will be adjusted in the media display. Some functions differentiate between driver and front passenger. No specific hand position is required.
Above the centre console	Defined poses	With defined poses a function is triggered depending on the application active.
Below the inside rearview mirror	Brief up and down movements	With brief vertical up and down movements below the inside rearview mirror the reading light for the driver or the front passenger is switched on and off.
Front passenger seat	Stretching out the hand above the front passenger seat	By stretching out the hand above the front passenger seat the search light is switched on. If the hand is withdrawn from this area, the search light is switched off again.

Operating functions by proximity of the hand to the touchscreen and touchpad
Requirements:

- One of the following applications appears in the media display:
  - Seat settings with displays for the driver and front passenger seat, e.g. Seat comfort
  - Home screen

- Radio menu or media menu
- Map in the navigation
- Active Parking Assist

• Recognition occurs as the hand approaches to approximately 10 cm from the touchpad or the touchscreen.

Seat adjustments by the driver or front passenger

In the seat settings menu, the MBUX Interior Assistant detects proximity to various control elements of the multimedia system. In addition, the MBUX Interior Assistant detects from which seat the action emanates.

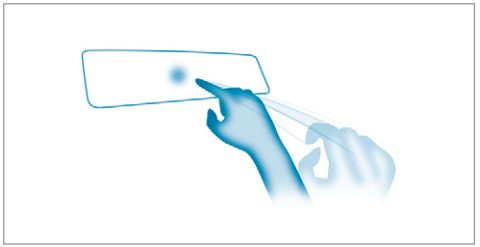

Hand approaching the touchscreen

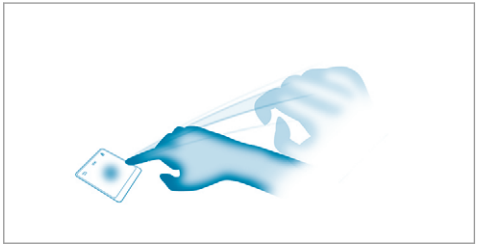

Hand approaching the touchpad

▶ With the seat setting display active, move the hand towards the touchscreen or touchpad. The seat of the person operating, driver's seat or front passenger seat, is enlarged in the media display.

The appropriate control elements are preselected automatically.

▶ Depending on the function, the person operating can either switch the function on or off directly or make other settings.

Highlighting an application on the home screen

The MBUX Interior Assistant detects in which area the hand is in front of the touchscreen. The display of objects shown is adjusted to improve orientation.

▶ Move a hand towards the touchscreen. The symbol for the application is enlarged. The quick-access applications will be highlighted.

▶ Continue operation, e.g. select a quick-access application.

ⓘ Further information about the home screen (→ page 304).

Activating cover change in the radio menu and media menu
The MBUX Interior Assistant reduces the number of operating steps.

- Move a hand towards the touchscreen or touchpad.
  The current information, e.g. about the radio station, track and artist are hidden. Cover change is activated.
- Continue operation and select a cover.
- As the hand is moved away from the touchscreen or touchpad, the current information is shown again.

ⓘ Further information on the radio menu (→ page 448) and the media menu (→ page 441).

Showing the navigation menu on the map
The MBUX Interior Assistant shows the navigation menu.

- Move a hand towards the touchscreen or touchpad.
  The navigation menu is shown.
- Continue operation and select a symbol.
- As the hand is moved away from the touchscreen or touchpad, the media display hides the navigation menu.

ⓘ Further information on the navigation menu (→ page 351).

Showing operating symbols in the Active Parking Assist camera image (only from driver's seat)
The MBUX Interior Assistant facilitates quick-access for the driver to various camera views.

- With the Active Parking Assist display active, move the hand in the direction of the touchscreen.
  The camera operation symbols are displayed.
- Continue operation and display the desired front, rear, left and right camera views.

ⓘ Further information on Active Parking Assist functions (→ page 243).

Operating a function with the favourites pose
Requirements:

- **To call up favourites:** there is at least one favourite.
- The area for recognition of the favourite's pose is above the centre console at the height of the climate control vents and the media display. The hand should have a distance of at least 10 cm from the media display.
- The pose is held for a brief time.

Calling up favourites
A pose calls up a favourite.

The driver and front passenger can connect two different favourites with the V pose.

ⓘ If a favourite has not yet been saved and connected with the MBUX Interior Assistant, the multimedia system will assist you.



Carrying out the V pose

▶ Position the hand above the centre console and in the direction of the media display. The back of the hand is facing upwards. In doing so the index and middle finger are extended with the other fingers bent inwards.
The favourite is called up.

Switching the reading light for the driver and front passenger on/off using gesture mode
Requirements:

- The function is available when it is dark.
- The gesture is carried out in the interaction area (under the inside rearview mirror).

Briefly moving the hand up and down under the inside rearview mirror switches the reading light specifically for the driver or front passenger on or off.



Carrying out operation of the reading light

▶ Move the hand up and down vertically under the reading light.
The reading light is switched on or off.

Switching the search light for the driver on/off using gesture mode
Requirements:

- The front passenger seat is not occupied.
- The function is available when it is dark.
- The gesture is completed in the interaction area (front-passenger seat).
- The seat belt on the front passenger seat must **not** be inserted in the seat belt buckle.

Stretching out with the hand over the front passenger seat when unoccupied switches a search light on for the driver when it is dark. Pulling the hand back switches the search light off again.

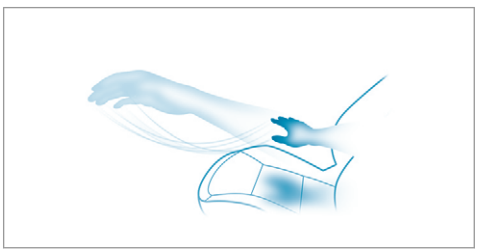

Interaction area for operating the search light

▶ **To switch on:** reach across the front passenger seat with your hand.
The search light is switched on for the driver.

- **To switch off:** take your hand back away from the front passenger seat.
  The search light is switched off again.

Settings for the MBUX Interior Assistant
Multimedia system:
→ ⌂ ›› Settings ›› System ›› Interior assistant

- **To switch on full functionality of the MBUX Interior Assistant:** select On.
  The option is activated ●.
- **To activate additional functions for reading and search lights:** select Including reading light.
  When the option is switched on, the display button is activated.
  The functions for the reading and search lights are activated in addition to the proximity functions.
- **To switch off the MBUX Interior Assistant:** select Off.
  The option is activated ●.

Main functions

Calling up applications

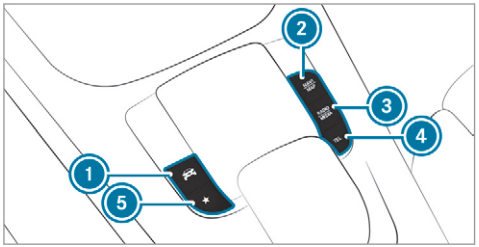

1. button
   Calls up vehicle functions
2. NAVI MAP button
   Calls up navigation
3. RADIO MEDIA button
   Calls up radio or media
4. TEL button
   Calls up the telephone
5. ★ button
   Press briefly: calls up favourites (→ page 323)
   Press and hold: adds a favourite (→ page 323) or creates a new theme (→ page 320)

Alternatively in the home screen: when you start the vehicle the home screen is shown in the media display.

- Select the application by swiping and tapping.

or

- **In any display:** press the ⌂ button on the Touch Control or on the touchpad.

or

- Tap on the ⌂ symbol on the touchscreen.
  The applications are displayed.
- Select the application by swiping and tapping.

Changing the arrangement of applications on the home screen

- Call up the home screen.

- ▶ Touch and hold an application on the touchscreen until symbols appear.
- ▶ Tap on ◀ or ▶ and move the application in the menu.
- ▶ Tap on ✓.

Profile

Notes on profiles

⚠ WARNING Risk of becoming trapped during adjustment of the driver's seat after calling up a driver profile

Selecting a profile may trigger an adjustment of the driver's seat to the position saved under the profile. You or other vehicle occupants could be injured in the process.

- ▶ Make sure that when the position of driver's seat is being adjusted using the multimedia system, no people or body parts are in the seat's range of movement.

If there is a risk of someone becoming trapped, stop the adjustment process immediately:

- ▶ a) Tap the warning message on the media display.

or

- ▶ b) Press a memory position button or a seat adjustment switch on the driver's door.
  The adjustment process is stopped.

The driver's seat is equipped with an anti-entrapment feature.

If the driver's door is open, the driver's seat will **not** be set after calling up the driver's profile.

Overview of profiles

Using the multimedia system up to seven profiles can be created in the vehicle.

Profiles store your personal vehicle settings and settings for the multimedia system.

If the vehicle is used by several drivers, the driver can select their profile before the journey, without changing the settings of other drivers.

You can select the profile:

- When entering (→ page 319)
- Using the home screen (→ page 304)

The profile settings are activated as soon as a profile is selected.

ⓘ When you call up your profile, the driver's seat and outside mirrors can be set.
If you call up your profile when driving then the driver's seat position will not be adjusted.

You can cancel the setting process with the following actions:

- Tap on the Positioning seat and steering wheel. Please tap to cancel. warning on the media display.
- Press one of the seat operating buttons in the driver's door.

Profile content

Depending on the vehicle equipment, the following settings can be stored in your profile, for example:

- Driver's seat and mirror settings

- Driver's seat memory
- Radio (including station list)
- Last destinations
- Climate control
- Ambient lighting
- DYNAMIC SELECT I (individual)
- Instrument Display, Head-up Display and style (display style of the multimedia system)
- Themes, suggestions and favourites

ⓘ Settings for driver assistance systems cannot be saved in the profile.

Mercedes me connect profile

If you use a profile from Mercedes me connect, the following online functions are available, for example:

- You can configure the settings in the vehicle using the Mercedes me app and the Mercedes me portal.
- You can synchronise your profile on Mercedes me connect with the profile in the vehicle (→ page 318).
- You can add a personal profile photo that is shown in the vehicle.
- You can take your profile and some of your settings with you in new vehicles.

Requirements for using Mercedes me connect profiles:

For the vehicle owner:

- You have a Mercedes me user account.
- The vehicle has been connected with the user account.
- The personalisation service is activated.

For additional users of the vehicle:

- You have a Mercedes me user account.
- The vehicle owner has invited you to connect your user account on Mercedes me with that of his vehicle.
- You have accepted the invitation.

Creating a new profile

Multimedia system:

↴ ⌂ » Profiles

▶ Select + Create profile.

▶ Select an avatar.

▶ Enter the name and confirm with OK.

▶ Select Continue ›.

▶ **To save the current settings in a profile:** select Current settings.

▶ Select Save.

or

▶ **To adopt the factory settings:** select Factory settings.

▶ Select Save.

ⓘ Further information on setting a user profile (→ page 318).

▶ Activate Bluetooth® and select Connect phone, to connect a mobile phone with the user profile (→ page 400).

You can also set up a user profile without registering a mobile phone.

▶ Select Finished.
The user profile is saved.

Selecting profile options
Multimedia system:
→ ⌂ » Profiles

- Select ••• for a profile.
- **To edit a profile:** select Edit profile.
- Select an avatar.
- Change the name, if necessary.
- Select Save.
- **To configure suggestions:** select Suggestions settings (→ page 322).
- **To reset favourites or themes:** select Reset favourites to factory settings or Reset themes to factory settings.
- Select Yes.
- **To reset a profile:** select Reset profile to factory settings.
- Select Yes.
- **To delete a profile:** select Delete profile.
- Select Yes.

ⓘ The guest profile cannot be deleted.

Protecting profile content
To protect your profile content and settings you can create a PIN in the Mercedes me portal for your profile. When PIN protection is active, you have to enter the PIN to select your profile.

- Select Protect content.
- Select Mercedes me portal.
  The browser opens and you are transferred to the Mercedes me portal.

Selecting a profile
Multimedia system:
→ ⌂ » Profiles

ⓘ When you call up your profile, the driver's seat and outside mirrors can be set.

You can cancel the setting process with the following actions:

- Tap on the Positioning seat and steering wheel. Please tap to cancel. warning on the media display.
- Press one of the seat operating buttons in the driver's door.

- Select a profile.
- Press the OK button to confirm the message.
  The profile is loaded and activated.

ⓘ Alternatively, the profile can already be selected when the vehicle is entered (→ page 319).

Synchronising a profile
Requirements:

- You have a Mercedes me user account.
- The vehicle is connected with your Mercedes me user account.
- The personalisation service is activated on Mercedes me connect.

Multimedia system:
→ ⌂ » Profiles
» General settings

Synchronisation enables the following:

- You can configure the vehicle settings using the Mercedes me app.
- The profile on Mercedes me connect and the profile in the vehicle are aligned (profile management).

- Activate Synchronise profiles automatically. The profiles in the vehicle are automatically synchronised with the profiles on Mercedes me connect when the ignition is switched on and off.

or

- Select Synchronise profiles now. After selecting this option, the profiles in the vehicle are synchronised with the profiles on Mercedes me connect.

ⓘ During synchronisation the profile list and the profile functions are blocked.

ⓘ **Note on data protection:** if you do not wish to share your data with Mercedes me, make sure that the automatic synchronisation is switched off and do not select Synchronise profiles now.

Showing the profile selection when entering
Requirements:

- At least one profile has been created.

Multimedia system:

→ ⌂ » Profiles

If the option is activated, you can see a profile as soon as you get in.

- Select General settings.
- Activate Show profile selection when entering. When the vehicle is started, the media display shows the active profile.

Themes

Overview of themes

You can configure the vehicle settings according to your preferences and save as a theme. A theme can be called up any time via the home screen. There is then no need to make the desired settings again.

There are pre-defined themes available, e.g. Journey, Efficiency and Lounge.

Example for the use of themes

For recurring driving situations, such as long drives on the motorway, you can save your preferred settings in a theme in the vehicle.

You can save the following settings in a theme, for example:

- Displays (e.g. navigation map or tachometer)
- Preferred radio station
- Favoured drive program

These settings are saved under the name you wish when setting up a theme (→ page 320). On the next motorway journey you can select this theme and thereby restore your settings.

Content of a theme

Depending on vehicle equipment the following settings can be saved in a theme:

- Setting of the Instrument Display (→ page 267)
- Setting of the Head-up Display (→ page 279)
- Setting of the ambient lighting (→ page 142)
- Active audio source, e.g. radio or USB

- Starting screen for the media display
- Visual style (→ page 336)
- DYNAMIC SELECT drive program (→ page 175)
- Eco start/stop setting (→ page 173)
- Navigation system settings

ⓘ A theme contains the currently active settings in the vehicle.

Calling up themes

Multimedia system:

→ ⌂

- When the home screen is shown, swipe up until THEMES appears.
- Select a theme.

Creating new themes

Requirements:

- The settings which are to be saved in the theme are active.

  The overview shows the settings which can be saved in a theme (→ page 319).

Multimedia system:

→ ⌂ » THEMES

- Select + Set theme.
  The settings which are saved in the theme are shown.
- Select Continue ›.
- Select additional settings which are to be saved in the theme.
  - Select Audio, to save the active audio settings in the theme.
  - Select Navigation (Navigation), to save the active navigation settings in the theme.
- Select Continue ›.
- Select an entry screen.
- Select Continue ›.
- Select an image.
- Enter the names into the entry field and confirm with OK.
- **To save a theme:** select Save.

When the maximum number that can be saved is reached:

- Select OK from the prompt.
- Select a theme that should be overwritten.
  The settings which are saved in the theme are shown.
- Select Continue ›.
- Select additional settings which are to be saved in the theme.
  - Select Audio, to save the active audio settings in the theme.
  - Select Navigation (Navigation), to save the active navigation settings in the theme.
- Select Continue ›.
- Select an entry screen.
- Select Continue ›.
- Select an image.
- Enter the names into the entry field and confirm with OK.
- **To save a theme:** select Save.

Creating using the ★ rocker switch or button

- Press and hold the bottom section of the ★ rocker switch on the steering wheel.

or

- Press and hold the ★ button next to the touchpad.
- Select + Set theme.
  The settings which are saved in the theme are shown.
- Select Continue ›.
- Select additional settings which are to be saved in the theme.
  - Select Audio, to save the active audio settings in the theme.
  - Select Navigation (Navigation), to save the active navigation settings in the theme.
- Select Continue ›.
- Select an image.
- Enter the names into the entry field and confirm with OK.
- **To save a theme:** select Save.

Modifying themes

Multimedia system:

↝ ⌂

- When the home screen is shown, swipe up until THEMES appears.
- Press on a theme until the OPTIONS menu is shown.
- Select Rename.
- Enter the name.
- Select Save✓.

Moving themes

Multimedia system:

↝ ⌂

- When the home screen is shown, swipe up until THEMES appears.
- Press on a theme until the OPTIONS menu is shown.
- Select Move.
- Tap on ◀ or ▶.
- Tap on ✓.

Moving the themes menu in the home screen

- Select ⌂.
- Swipe upwards and select Set new order.
- Select Themes.
- Tap on ▲ or ▼.
- Tap on ✓.

Deleting themes

Multimedia system:

↝ ⌂

- When the home screen is shown, swipe up until THEMES appears.
- Press on a theme until the OPTIONS menu is shown.
- Select Delete.
- Select Yes.

Suggestions

Suggestions overview

The vehicle can learn the habits of the driver. Based on previously used functions, the most likely navigation destinations, media sources,

radio stations or contacts are offered under SUGGESTIONS.

Suggestions are shown when the following requirements are fulfilled:

- A profile has been created (→ page 317).
- A profile has been selected.
- You have accepted data recording.
- From the beginning of usage, the multimedia system must analyse the user habits. When sufficient data is collected then the suggestions are available.

If the requirements mentioned are not fulfilled, a preview with a description of the function appears in the SUGGESTIONS menu.

You can configure data recording (→ page 322) or delete the suggestions recorded (→ page 323).

Calling up suggestions
Requirements:

- A profile has been created and is selected (→ page 318).

▶ Tap on ⌂ in the media display.
The home screen is shown.

▶ Swipe up until the SUGGESTIONS menu is shown.

▶ Select a navigation destination, a media source, a radio station or a contact.
If route guidance is already active, you cannot start a new route guidance or set an intermediate destination for the existing route.

Configuring suggestions
Requirements:

- **To protect settings using a PIN:** your profile is connected with Mercedes me and your Mercedes me account is PIN protected.

Multimedia system:

↳ ⌂ » 👤 Profiles

▶ Select ••• for a profile.

▶ Select Suggestions settings.

▶ **To switch suggestions display on/off:** switch Allow destination suggestions, Allow music suggestions and Allow contact suggestions on or off.
If an option is switched on, suggestions for navigation destinations, media sources, radio stations or contacts are shown.

If the option is switched off, no suggestions are shown.

▶ **To deactivate the learn function for one day:** activate Deact. learn. for 24h.
For 24 hours no new actions will be trained and no data recorded for the active profile. Suggestions will continue to be shown. The remaining time is shown next to Deact. learn. for 24h.

Before the time runs out, a message is shown that the multimedia system will continue the learn function shortly.

Example: if the option is switched on and a route to a new destination has been calculated, this destination would not be taken into account for the learn function.

▶ **To reset the suggestion history:** select Reset suggestion history.

ⓘ This process cannot be reversed.

- Select Yes.
- **To protect settings with a PIN:** switch on PIN protection.
  If PIN protection is switched on, you must enter the Mercedes me PIN to set the suggestions. This PIN will be set in the Mercedes me portal for the personalisation service to protect your personal settings.

Renaming suggestions

Only navigation destinations can be renamed.

- Tap on the ⌂ symbol in the media display.
  The home screen is shown.
- Swipe up until the SUGGESTIONS menu is shown.
- Highlight a navigation destination and press until the OPTIONS menu is shown.
- Select Rename.
- Enter the name.
- **To confirm the entry:** select Yes.

Deleting a suggestion

- Tap on ⌂ in the media display.
  The home screen is shown.
- Swipe up until the SUGGESTIONS menu is shown.
- Highlight a suggestion and press until the OPTIONS menu is shown.
- Select Delete.
  The query as to whether the suggestion is deleted temporarily or permanently appears.
- **If the suggestion should be shown again at a later time:** select Not now.
- **If the suggestion should not be shown again:** select Never.

Favourites

Overview of favourites

Favourites offer you quick access to frequently used applications. It is possible to create 20 favourites in total.

You can select favourites from categories or you add favourites directly from an application.

Calling up favourites

In the media display

- Tap on ⌂.
  The home screen is shown.
- Swipe up until FAVOURITES is shown.

On the steering wheel or the touchpad

- Press the ★ rocker switch on the steering wheel down.

or

- Press the ★ button next to the touchpad.

Adding favourites

Selecting favourites from categories

- Tap on ⌂ in the media display.
  The home screen is shown.
- Swipe up until FAVOURITES is shown.
- Select + Create favourite.
  The categories are displayed.
- Select the category.
  The favourites are displayed.

- Select a favourite.
  The favourite is stored at the next available position.
- **All positions in the favourites are taken:** confirm the message shown with OK.
  A list shows all the favourites.
- Select a favourite which should be overwritten.

Adding a favourite from an application

Examples of adding from an application are:

- Saving a contact.
- Storing a radio station.
- Adding a media source.
- Saving a navigation destination.
- Adding an ENERGIZING comfort program (if available).

- **To save a contact as a global favourite:** select a contact (→ page 406).
  The details are displayed.
- Press on a telephone number until the OPTIONS menu is shown.
- Select Save as favourite.
  The contact is added as a favourite.
- **To store a radio station as a global favourite:** set a radio station (→ page 448).
- Press on the radio station until the OPTIONS menu is shown.
- Select Save as favourite.
  The radio station is added as a favourite.

Renaming favourites

- Tap on ⌂ in the media display.
  The home screen is shown.
- Swipe up until FAVOURITES is shown.
- Press on a favourite until the OPTIONS menu is shown.
- Select Rename.
- Enter the name.
- Select OK.

Moving favourites

Moving favourites in the favourites menu

- Tap on ⌂ in the media display.
  The home screen is shown.
- Swipe up until FAVOURITES is shown.
- Press on a favourite until the OPTIONS menu is shown.
- Select Move.
- Move the favourite to the new position.
- Tap on ✓.

Moving the favourites menu in the personalisation

- Tap on ⌂ in the media display.
  The home screen is shown.
- Swipe up until Set new order is shown.
- Select Set new order.
- Move Favourites to the new position.
- Tap on ✓.

Deleting favourites

- Tap on ⌂ in the media display.
  The home screen is shown.
- Swipe up until FAVOURITES is shown.
- Press on a favourite until the OPTIONS menu is shown.

▶ Select Delete.
▶ Select Yes.

Notifications Centre

Overview of the Notifications Centre

The following communications are collected in the Notifications Centre:

- Communications which are generated by the vehicle or from multimedia system.
- Communications which are received through the use of services.

The following notification types are available for you:

- Navigable destinations and routes
- Messages (text messages)
- Calendar entries and reminders, e.g. from In-Car Office

  This function is not available in all countries.
- System information, e.g. Important software update available.
- Other notifications, e.g. from additional online services that can be subscribed to

The Notifications Centre can be found on the home screen, in menus and at the top right of the navigation map (→ page 304).

Newly received messages will be indicated with a star in the symbol.

Notifications are normally briefly shown as they are received. This occurs for nearly every application that you are currently using. If you take no action, these are stored for future access in the Notifications Centre.

The notifications are sorted chronologically. The most recent notifications are at the top.

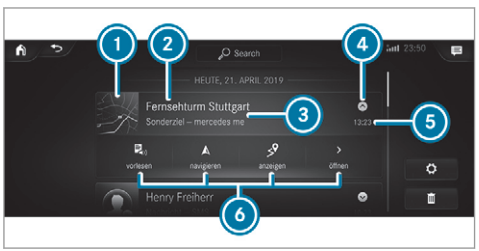

A notification shows the following information:

- Symbol or image (1) for the application
- Title (2), which contains the name, a telephone number or a navigation destination, for example
- The service and additional information (3)
- A time stamp (5)
- If several actions are available, symbol (4) to open or close the notification.

Depending on the type of notification, up to four different actions (6) are available.

Examples of actions include:

- Read aloud
- Placing a call
- Reply
- Calling up a web page
- Navigation

Some notifications, e.g. a navigation destination, are stored longer. Therefore, it is not necessary to carry out available actions directly on the

receipt of the notifications. A route guidance can be started at a later time.

ⓘ You can start a global search in the Notifications Centre (→ page 327).

Calling up notifications

Opening the Notifications Centre

- **On the touchpad:** swipe down with two fingers.

or

- **On the touchscreen:** tap on the symbol for the Notifications Centre.

or

- **On the Touch Control and on the touchpad:** mark the symbol for the Notifications Centre by swiping.
- Press on the control element.

Selecting a notification

- Swipe up or down.
- Tap or press on the control element.

Calling up old notifications

If notifications have not been called up after four hours, these are stored in the archive.

- Swipe upwards and select Archive.
- Select the notification.

Closing the Notifications Centre

- **On the touchpad:** swipe up with two fingers.

Selecting actions for a notification

The following options are available:

- Select the action directly in an application after a notification is received and shown.
- Select the action later after calling up in the Notifications Centre.

- **An action is available:** select the action.
- **Several actions are available:** if the notification is not open, select the symbol.
- Select the action.
  The notification is still available.
- If Additional information is available, select the action.
  Additional information is shown in a window as text, image or text and image.
- **To close the window:** select OK.

Editing notifications

- Call up the Notifications Centre (→ page 326).
- **To make settings:** select .

ⓘ If no settings can be made, a message appears.

- Select the service.
- Switch the options on or off.

  The following options are available:

  - Allow notifications
  - Display in notification centre
  - Show notifications
  - Acoustic feedback

  When Allow notifications is switched on, the other options cannot be selected.

▶ **To delete:** touch a message on the touchscreen and slide to the left or right.

or

▶ Select 🗑.

▶ Select Delete or Delete all.
Delete deletes a single notification.
Delete all deletes all notifications currently shown.

▶ With ☑ you will exit delete mode.

Global search

Global search overview

You can use the global search in the home screen and in the notifications.

The global search provides search results for the following categories:

- Navigation
- Entertainment
- Telephone, social media, In-Car Office
  In-Car Office is not available in all countries.
- User interface and Digital Owner's Manual
- Internet

This enables you to search for towns, roads and tourist attractions with the navigation system, for example.

ⓘ You can also search for 3 word addresses (→ page 358).
When you enter a 3 word address in the global search, separate each of the words with a space or a full stop.

During the entry process the most likely suggestions are shown beneath the search field. When you enter "S", "Stuttgart", "Steak" and "Sandra" are shown, for example. If you select "Stuttgart", you receive the suggestions "Starbucks", "Steak" and "City railway", for example.

The search results in the list are shown, sorted according to category. Next to the category is the number of results. You will be shown the best results from each category. Additional results can be found after selecting the respective category.

If you confirm an entry with OK, all categories and the number of results will be shown in a summary. After selecting a category you can select the search results within the category. When you select a search result the detailed view opens. In the detailed view you can choose whether and which actions you want to carry out with the respective search result. For example, you can start route guidance or place a call to somebody. The actions are named correspondingly.

The search can be carried out with the following input methods:

- Entering characters using the on-screen keypad
- Entering characters with handwriting recognition
- Dictation function

Using the global search

Multimedia system:

↪ 🏠

▶ Select 🔍 Search.

or

▶ Call up the notifications (→ page 326).

▶ Select Search.

- Enter the search term into the search field. During the entry process the three most likely suggestions are offered beneath the search field.

  In the list on the right, the top two search results are shown for each category.

ⓘ Use the character input function Alternatively, you can use the dictation function for the search.

- **To accept a suggestion:** select the suggestion.
  The three most likely suggestions are offered.
- Continue the search or accept a suggestion.
- **To accept the second search result:** select the search result.
  An action starts or a list is shown.
- Select a search result or an action in the list.
- **To show all categories:** select OK.
- **To show search results for a category:** select a category.
- **To show details:** select a search result.
- **To start an action:** select an action.
  After selection of an action, a track is played back or the route to a destination is calculated, for example.

Switching the sound on/off

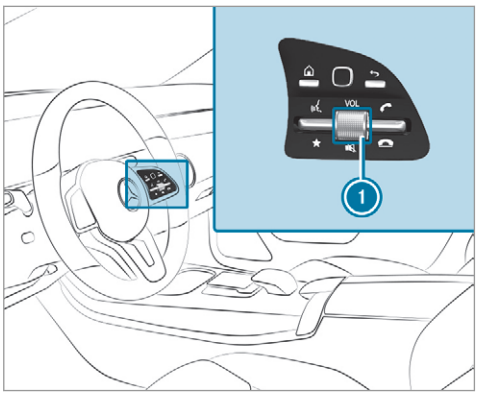

On the multifunction steering wheel

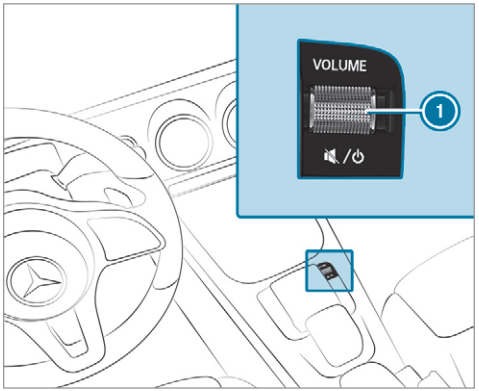

On the multimedia system

- **To mute:** press volume control 1.
  The symbol appears in the status line of the media display.

  You will also hear traffic announcements and navigation announcements even when the sound is muted.

▶ **To switch on:** turn volume control (1) or change the media source.

Adjusting the volume

Adjusting with the control knob

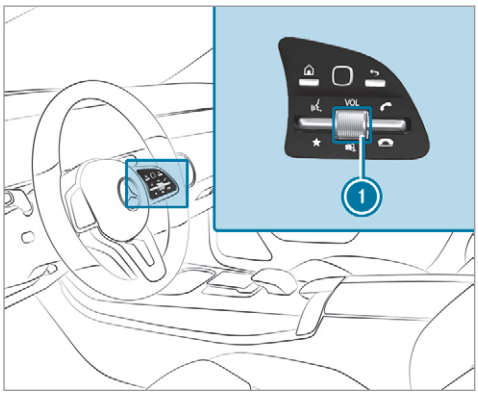

On the multifunction steering wheel

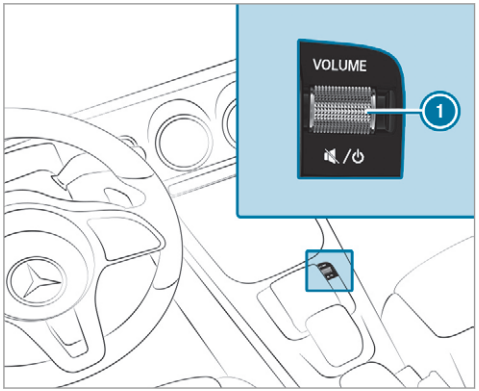

On the multimedia system

▶ Turn volume control (1).
The volume of the current volume group (e.g. entertainment) is set. The volume of other groups can be adjusted separately.

Adjust the volume in the following situations:

- during a traffic announcement
- during a navigation announcement
- during a telephone call

Setting in the menu

▶ Press the ⌂ button on the Touch Control or on the touchpad.
▶ Select Settings.
▶ Select System.
▶ Select Audio.
▶ Select a volume setting.
▶ Set the volume.

Entering characters

Using the character input function

⚠ **WARNING** Risk of distraction from information systems and communications equipment

If you operate information and communication equipment integrated in the vehicle when driving, you will be distracted from the traffic situation. This could also cause you to lose control of the vehicle.

- ▶ Only operate this equipment when the traffic situation permits.
- ▶ If you cannot be sure of this, stop the vehicle whilst paying attention to road and traffic conditions and operate the equipment with the vehicle stationary.

You must observe the legal requirements for the country in which you are currently driving when operating the multimedia system.

Requirements:

- **For the handwriting recognition read-aloud function:** the multimedia system is equipped with a voice control system.
- The read-aloud function is available for the selected system language.
- The handwriting recognition read-aloud function is activated.

Character entry can be carried out with these control elements:

- Touch Control
- Touchscreen (media display)
- Touchpad

Character input can be started with a control element and resumed with another.

- ▶ When the keypad is shown, enter the characters on the control element by swiping and pressing or by tapping (touchscreen).

or

- ▶ Write the characters on the touchpad or the touchscreen.

The touchpad supports character input with the following functions:

- Handwriting recognition offers character suggestions.
- If the read aloud function is activated for handwriting recognition then the entered characters are read aloud.

Examples of character entry:

- Renaming a favourite
- Looking for search results in the global search.
- Entering a destination address in the navigation system
- Entering a web address

Entering characters on the touchpad

Requirements:

- If you wish to have the character input read aloud: the read aloud function of the handwriting recognition is switched on (⟶ page 308).
- An online connection is required for some functions.



Using the keyboard

1 Input line

2 Shows suggestions during input (if available)

3 Deletes an entry

4 Deletes

Pressing or pressing briefly deletes the last character entered

Pressing and holding deletes the entry

5 Accepts an entry

6 Switches to handwriting input

7 Enters a space

8 Changes the keyboard language

9 Switches to special characters

10 Switches to digits and additional special characters (if available for the current character set)

ABC Switches to letters (level 2)

11 Pressing or pressing briefly switches between upper-case and lower-case letters (if available for the current character set)

Pressing and holding switches to upper-case letters permanently

If available, the symbol allows you to change to voice input.

ⓘ When Touchpad tap is switched on, tapping is sufficient to select a character or an option (→ page 308).

- Call up the character entry to rename a favourite, for example (→ page 324).
- Select the character by swiping and pressing. The character is entered in input line ①. Suggestions are shown in ②.
- **To select a suggestion:** select one of the entries.
- Resume character input.
- **To enter an alternative character:** press and hold a character.
- Select the character.
- **To end character input:** press the button.

ⓘ The available editing functions depend on the editing task, the language set and the character level.

ⓘ Entry using the keyboard can also be completed using the Touch Control.

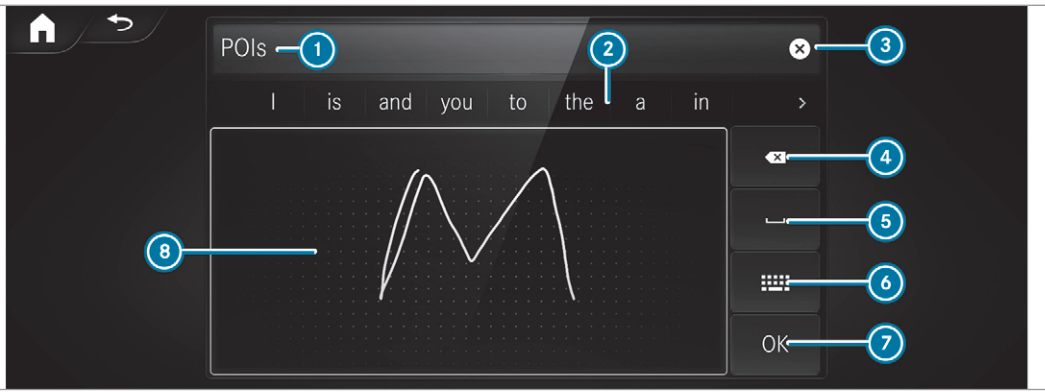

Using handwriting input

① Input line

② Shows suggestions during input

③ Deletes an entry
④ Deletes
Pressing or pressing briefly deletes the last character entered
Pressing and holding deletes the entry
⑤ Enters a space
⑥ Switches to input using the keyboard
⑦ Accepts an entry
⑧ Writes characters on the drawing surface
If available, the symbol allows you to change to voice input.

ⓘ When Touchpad tap is switched on, tapping is sufficient to select an option (→ page 308).

- Call up the character entry to rename a favourite, for example (→ page 324).
- When the keyboard is displayed, select .
- Write the character on the touchpad with a finger.
The character is entered in input line ①.
Suggestions are shown in ②.
- **To select a suggestion:** select one of the entries.
- Resume character input. The letters can be written next to each other or above each other.
- **To end character input:** press the button.

Entering characters on the touchscreen
Requirements:

- If you wish to have the character input read aloud: the read aloud function of the handwriting recognition is switched on (→ page 308).
- An online connection is required for some functions.



Using the keyboard

1 Input line

2 Shows suggestions during input (if available)

3 Deletes an entry

4 Deletes

Pressing briefly deletes the last character entered

Pressing and holding deletes the entry

5 Accepts an entry

6 Switches to handwriting input

7 Enters a space

8 Changes the keyboard language

9 Switches to special characters

10 Switches to digits and additional special characters (if available for the current character set)

ABC Switches to letters (level 2)

11 Pressing or pressing briefly switches between upper-case and lower-case letters (if available for the current character set)

Pressing and holding switches to upper-case letters permanently

If available, the symbol allows you to change to voice input.

- Call up the character entry to rename a favourite, for example (→ page 324). The keyboard is shown.
- Briefly press on a character. The character is entered in input line (1). Suggestions are shown in (2).
- **To select a suggestion:** select one of the entries.
- If available, display additional suggestions with ❮ or ❯.
- Resume character input.
- **To enter an alternative character:** press and hold a character.
- Select the character.
- **To end character entry:** press briefly on ⮌.

ⓘ The available editing functions depend on the editing task, the language set and the character level.

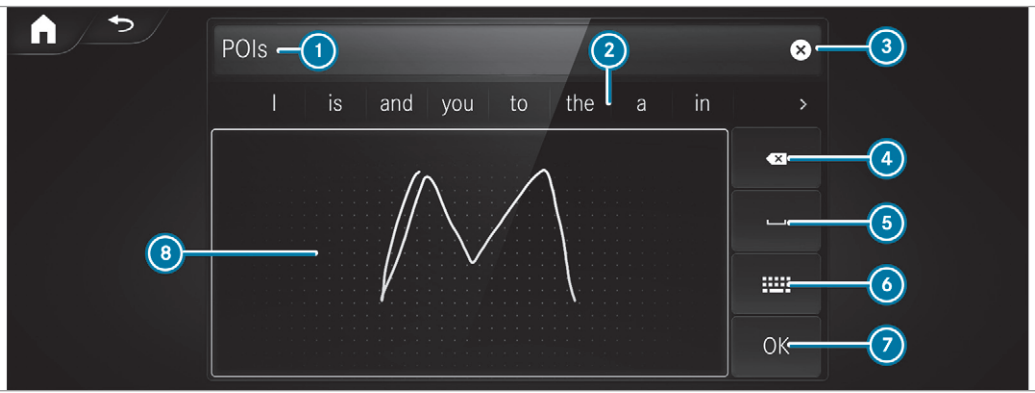

Using handwriting input

(1) Input line

(2) Shows suggestions during input

③ Deletes an entry
④ Deletes
Pressing briefly deletes the last character entered
Pressing and holding deletes the entry
⑤ Enters a space
⑥ Switches to input using the keyboard
⑦ Accepts an entry
⑧ Writes characters on the drawing surface
If available, the [ ] symbol allows you to change to voice input.

- Call up the character entry to rename a favourite, for example (→ page 324).
- When the keyboard is displayed, select [ ].
- Write the character with one finger on the touchscreen.
The character is entered in input line ①. Suggestions are shown in ②.
- **To select a suggestion:** select one of the entries.
- If available, display additional suggestions with [ ] or [ ].
- Resume character input. The letters can be written next to each other or above each other.
- **To end character entry:** press briefly on [ ].

Setting the keyboard for character entry
Multimedia system:
→ Settings ▸▸ System ▸▸ Controls ▸▸ Keyboards and handwriting
- Confirm Select keyboards.
Select the keyboard language in the list.

System settings

Display

Configuring display settings
Multimedia system:
→ [ ] ▸▸ Settings ▸▸ System ▸▸ Styles & display

Setting the design
- Select Styles.
- Select Classic, Sport or Progressive.
The multimedia system display changes depending on the style selected. If you revert to the factory settings, the Classic style is set.
- **To adjust the ambient lighting to a style:** select Ambient lighting adjustment.
This function adjusts the ambient lighting for the selected display style.

Setting the display brightness
- Select Display brightness.
- Select a brightness value.

Switching the display off/on
- **Off:** select Display off.
- **On:** press a button, [TEL], for example.

Selecting the display design
- Select Day/night design.
- Select Automatic, Day design or Night design.

Switching the temperature display on/off

- Select Temperature display.
- Select Outside temp. or Coolant temp..
  The selected temperature is displayed in the instrument cluster.

Time and date

Setting the time and date automatically

Multimedia system:

→ ⌂ ▸▸ Settings ▸▸ System ▸▸ Time and date

- Deactivate Manual time adjustment.
  The time and date are set automatically for the selected time zone and summer time option.

ⓘ The correct time is required for the following functions:

- Route guidance with time-dependent traffic guidance.
- Calculation of expected time of arrival.

Setting the time zone

Requirements:

- **For the manual time zone:** Automatic time zone is switched off.

Multimedia system:

→ ⌂ ▸▸ Settings ▸▸ System ▸▸ Time and date

Setting the time zone manually

- Select Time zone:.
  The list of countries is displayed.

ⓘ If there are several time zones available in a country, these will be shown after the country is selected.

- Select a country and, if required, a time zone.
  The time zone set is displayed after Time zone:.

Setting the time zone automatically

- Activate Automatic time zone.

Setting the time and date format

Multimedia system:

→ ⌂ ▸▸ Settings ▸▸ System ▸▸ Time and date ▸▸ Set format

- Set the date and time format ●.

Setting the time and date manually

Requirements:

- The Manual time adjustment function is switched on.
- **For setting the date manually:** no GPS is installed in the vehicle.

Multimedia system:

→ ⌂ ▸▸ Settings ▸▸ System ▸▸ Time and date

Setting the time (without time zone)

- Select Set time.
- Set a time.

Setting the time (with time zone)

- Select Set time.

If a time zone is set the time is set automatically using the time zone. The time can be adjusted by a maximum of plus or minus 60 minutes.

▶ Adjust the time using the slide control.

Setting the date

▶ Select Set date.

▶ Set a date.

ⓘ In vehicles with GPS, a date cannot be set even with active manual time adjustments. The date is then set automatically through the selected time zone.

Connectivity

Switching transmission of the vehicle position on/off

Requirements:

- a Mercedes me account is available.
- at least one service is activated in the Mercedes me portal which has access to the transmitted position data.

ⓘ The function is country-dependent. For more information, consult a Mercedes-Benz service centre.

Multimedia system:

↪ ⌂ ⏩ Settings ⏩ System ⏩ Wi-Fi & Bluetooth

▶ Select Transmit vehicle position.

▶ Activate or deactivate the function.

Bluetooth®

Information about Bluetooth®

Bluetooth® technology is a standard for short-range wireless data transfer up to approximately 10 m.

You can use Bluetooth® to connect your mobile phone to the multimedia system and use the following functions, for example:

- Hands-free system with access to the following options:
  - contacts (→ page 405)
  - call lists (→ page 408)
  - text message (→ page 409)
- Internet connection (→ page 429)
- Listening to music via Bluetooth® audio (→ page 442)
- Transferring business cards (vCards) into the vehicle

Bluetooth® is a registered trademark of Bluetooth Special Interest Group (SIG) Inc.

ⓘ Internet connection via Bluetooth® is not available in all countries.

Activating/deactivating Bluetooth®

Multimedia system:

↪ ⌂ ⏩ Settings ⏩ System ⏩ Wi-Fi & Bluetooth

▶ Switch Bluetooth on or off.

Wi-Fi

Wi-Fi connection overview

You can use Wi-Fi to establish a connection with a Wi-Fi network and to access the Internet or other network devices.

The following connection options are available:

- Wi-Fi connection

  The Wi-Fi connection to a Wi-Fi-capable device, e.g. the customer's mobile phone or a tablet PC is established.
- Multimedia system as a Wi-Fi hotspot

  Using this function, a tablet PC or notebook can be connected, for example. The connected device can use the data tariff of the vehicle. A maximum of three devices can be connected with the hotspot at the same time.

ⓘ The use of the vehicle data tariff by external devices is not available in all countries.

To establish a connection, you can use the following methods:

- WPS PIN

  The connection to a secure Wi-Fi network is made via a PIN.
- WPS PBC

  The connection to a secure Wi-Fi network is made by pressing a button (push button).
- Security key

  The connection to a secure Wi-Fi network is made via a security key.

Setting up Wi-Fi
Requirements:

- **To set up the Wi-Fi connection of the multimedia system with new devices:** there is no communication module installed.
- The device to be connected supports one of the three means of connection described.

Multimedia system:
↳ ⌂ ▸▸ Settings ▸▸ System ▸▸ Wi-Fi & Bluetooth

Activating/deactivating Wi-Fi

▶ Select Wi-Fi.
If Wi-Fi is switched on, you can connect the multimedia system with external hotspots. If Wi-Fi is deactivated, communication via Wi-Fi to all devices is interrupted. This also means that a connection to the communication module cannot be established. Then some functions such as dynamic route guidance with Live Traffic Information are not available.

Connecting the multimedia system with a new device via Wi-Fi
This function is available if a communication module is not installed.

The type of connection established must be selected on the multimedia system and on the device to be connected.

ⓘ The connection procedure may differ depending on the device. Follow the instructions that are shown in the display. Further information (see the manufacturer's operating instructions).

▶ Select Internet settings.
▶ Select Connect via Wi-Fi.
▶ Select Add hotspot.

Connecting using a security key

▶ Select the options ❯ of the desired Wi-Fi network.
▶ Select Connect using security key.

- Have the security key displayed on the device to be connected (see the manufacturer's operating instructions).
- Enter this security key on the multimedia system.
- Confirm the entry with ok.

ⓘ All devices support a security key as a means of connection.

Connecting using a WPS PIN

- Select the options > of the desired Wi-Fi network.
- Select Connect using WPS PIN input. The multimedia system generates an eight-digit PIN.
- Enter this PIN on the device to be connected.
- Confirm the entry.

Connecting using a button

- Select the options > of the desired Wi-Fi network.
- Select Connect via WPS PBC.
- Select "Connect via WPS PBC" in the options on the device to be connected (see the manufacturer's operating instructions).
- Press the WPS button on the device to be connected.
- Select Continue in the multimedia system.

Activating automatic connection

- Select Connect via Wi-Fi.
- Select the options > of the desired Wi-Fi network.
- Activate Permanent Internet connection.

Connecting with a known Wi-Fi

- Select Connect via Wi-Fi.
- Select a Wi-Fi network. The connection is established again.

Setting up a Wi-Fi hotspot

Multimedia system:

→ ⌂ ▸▸ Settings ▸▸ System ▸▸ Wi-Fi & Bluetooth

Configuring the multimedia system as a Wi-Fi hotspot

The type of connection established depends on the device to be connected. The function must be supported by the multimedia system and by the device to be connected. The type of connection established must be selected on the multimedia system and on the device to be connected.

- Select Vehicle hotspot.
- Select Connect device to vehicle hotspot.

Connecting using WPS PIN generation

- Select Connect using WPS PIN generation.
- Enter the PIN shown in the media display on the device to be connected and confirm.

Connecting using WPS PIN entry

- Select Connect using WPS PIN input.

- Enter the PIN that is shown on the external device's display on the multimedia system.

Connecting using a button

- Select Connect via WPS PBC.
- Press the push button on the device to be connected (see the manufacturer's operating instructions).
- Select Continue.

Connecting using a security key

- Select Connect device to vehicle hotspot.
  A security key is displayed.
- Select the vehicle from the device to be connected. The vehicle is displayed with the MB Hotspot XXXXX network name.
- Enter the security key which is shown in the media display on the device to be connected.
- Confirm the entry.

Connecting using NFC

- Select Connect via NFC.
- Activate NFC on the mobile device (see the manufacturer's operating instructions).
- Bring the mobile device into the NFC area of the vehicle (→ page 402).
- Select Finished.
  The mobile device is now connected to the multimedia system hotspot via NFC.

Generating a new security key

- Select Vehicle hotspot.
- Select Generate security key.
  A connection will be established with the newly created security key.
- **To save a security key:** select Save.
  When a new security key is saved, all existing Wi-Fi connections are then disconnected. If the Wi-Fi connections are being re-established, the new security key must be entered.

System language

Notes on the system language

This function allows you to determine the language for the menu displays and the navigation announcements. The selected language affects the characters available for entry. The navigation announcements are not available in all languages. If a language is not available, the navigation announcements will be in English.

Setting the system language

Multimedia system:

→ ⌂ ▸▸ Settings ▸▸ System ▸▸ 🌐 Language

- Set the language.

ⓘ If you are using Arabic map data, the text information can also be shown in Arabic on the navigation map. To do so, select العربية as the language from the language list. Navigation announcements are then also made in Arabic.

Setting the distance unit

Multimedia system:

→ ⌂ ▸▸ Settings ▸▸ System ▸▸ Units

- Select km or mi.
- In the multifunction display of the Instrument Display, switch the Additional speedometer display on.

Data import and export

Data import/export function

The following functions are possible:

- Transferring data from one system or vehicle to another system or vehicle.
- Creating a backup copy of your personal data and loading it again.
- Protecting your personal data against unwanted export with PIN protection.

ⓘ Please note that the NTFS file system is not supported. The FAT32 file system is recommended.

Importing/exporting data

! NOTE Loss of data due to premature removal

▶ Do not remove the data storage medium when data is being exported.

Mercedes-Benz is not liable for any loss of data.

Requirements:

- The vehicle is stationary.
- The ignition is switched on.
- A USB device is connected.

Multimedia system:

↝ ⌂ ⏩ Settings ⏩ System ⏩ System backup

▶ Select Import data or Export data.

Importing

▶ Select a data storage medium.
A prompt appears asking whether you really wish to overwrite the current data. If data originates from another vehicle, this is recognised during data reading.

▶ Confirm the prompt.

The files are imported. The multimedia system is restarted once the data has been imported.

ⓘ Current vehicle settings can be edited after the import.

Exporting

If PIN protection is activated, your PIN is requested.

▶ Enter the four-digit PIN.

▶ Select a data storage medium.
A prompt appears asking whether you really wish to carry out the export.

▶ Confirm the prompt.
The data is exported. The data export may take several minutes.

ⓘ After successful export, the data is saved in the "MyMercedesBackup" directory which can be found on the storage medium.

Activating/deactivating PIN protection

Requirements:

- **To unlock the PIN:** there is an Internet connection.
- A Mercedes me account exists at http://www.mercedes.me.
- An individual user profile is active (→ page 318).

Multimedia system:
↝ ⌂ ⏩ Settings ⏩ System ⏩ PIN protection

Setting the PIN

- ▶ Select Set PIN.
- ▶ Enter a four-digit PIN.
- ▶ Enter the four-digit PIN again.
  If both PINs match, PIN protection is active.

Changing the PIN

- ▶ Select Change settings.
- ▶ Enter the current PIN.
- ▶ Select Change PIN.
- ▶ Set a new PIN.

Activating PIN protection for data export

- ▶ Select Protect data export.
  Activate or deactivate the function.

Unblocking the PIN via the Mercedes me portal

If the PIN has been entered incorrectly three times, the PIN will be blocked. You can have a single-use password sent to you via the Mercedes me connect online portal to reset the PIN protection.

- ▶ Select Unblock PIN.
- ▶ Enter the single-use password.
  PIN protection is reset, and you can set a new PIN.

Software update

Information on software updates

A software update consists of three steps:

- Downloading or copying of the data required for installation
- Installation of the update
- Activation of the update by restarting the system

The multimedia system provides a message when an update is available.

Depending on the source, you can perform various updates:

Software updates

Source of the update	Update type
Internet	Navigation map, system updates, Digital Owner's Manual
External storage medium, e.g. USB flash drive	Navigation maps

ⓘ Installation can take several minutes and cancellation is not possible. If you do not install the software updates then the status of your vehicle will not be up-to-date. During the installation, individual functions or control elements are not available or only available to a limited degree.

Advantages of updating software

Software updates ensure your vehicle's technology is up-to-date.

In order to improve the quality of our services you will receive future updates for your multimedia system, the Mercedes me connect services

and your vehicle's communication module. These will conveniently be sent to you via the mobile phone connection in your vehicle and, in many cases, installed automatically. You can monitor the status of your updates at any time on the Mercedes me portal and find information about potential innovations.

Your advantages at a glance:

- conveniently receive software updates via the mobile phone network
- improves the quality and availability of Mercedes me connect services
- keeps your multimedia system and communication module up-to-date

Further information about software updates can be found at https://me.mercedes-benz.com

Performing a software update
Requirements:

- **For online updates:** an Internet connection is established (→ page 429).
- **For automatic online updates:** your vehicle has a permanently installed communication module.

Multimedia system:

↪ ⌂ ⏩ Settings ⏩ System ⏩ Software update

Automatically

▶ Activate Automatic online updates.
The updates will be downloaded and installed automatically.

The current status of the updates is displayed.

Manually

▶ Deactivate Automatic online updates.

▶ Select an update from the list and start the update.

Activating the software update

▶ Restart the system.
The modifications from the software update will be active.

Function of important system updates
Important system updates may be necessary for the security of your multimedia system's data. Install these updates, or else the security of your multimedia system cannot be ensured.

ⓘ If automatic software updates are activated, the system updates will be downloaded automatically (→ page 344).

As soon as an update is available for download, a corresponding message appears on the media display.

You have the following selection options:

- Accept and install
  The update will be downloaded in the background.
- Information
  Information about the pending system update is displayed.
- Later
  The update can be downloaded manually at a later time (→ page 344).

Deep system updates
Deep system updates access vehicle or system settings and can therefore only be carried out

when the vehicle is stationary and the ignition is switched off.

If the download of a deep system update is completed and the update is ready for installation, you will be informed of this after the next ignition cycle, for example.

ⓘ Park the vehicle safely in a suitable location before starting the installation.

Requirements for the installation:

- The ignition is switched off.
- Notes and warnings have been read and accepted.
- The electric parking brake is applied.

If all requirements are met, the update will be installed. The multimedia system cannot be operated while the update is being installed and vehicle functions are restricted.

If errors should occur during the installation, the multimedia system automatically attempts to restore the previous version. If restoration of the previous version is not possible, a symbol appears on the media display. Please consult a qualified specialist workshop to resolve the problem.

Resetting the multimedia system (reset function)

Multimedia system:

↳ ⌂ ⏩ Settings ⏩ System ⏩ Reset

Personal data is deleted, for example:

- Station presets
- Connected mobile phones
- individual user profiles

ⓘ The guest profile is reset when the settings are restored to the factory settings.

A prompt appears again asking whether you really wish to reset.

▶ Select Yes.
The multimedia system is reset to the factory settings. If you have set a PIN for your system, this will also be reset.

Fit & Healthy

Setting ENERGIZING seat kinetics

Requirements:

ⓘ These functions are available only for fully electric seats with a memory function.

Multimedia system:

↳ ⌂ ⏩ Comfort ⏩ Seat comfort

▶ Select Seat kinetics.

ENERGIZING seat kinetics can support back health by changing the seat position during a journey. The muscles and joints are repeatedly stressed and relieved by means of minor movements of the cushion and backrest.

Starting seat kinetics

▶ Select ▶ for the desired seat.

▶ The program will run for the set duration.

Configuring seat kinetics

▶ Select ⚙ for the desired seat.

▶ Select Backrest or Backrest and seat surface.

▶ Select the desired setting.

Vehicles with a multicontour seat:

In addition to the seat backrest and seat cushion, the lumbar region can be activated for the function.

▶ Switch Including lumbar on or off.

Setting the duration

▶ Select ☼ for the desired seat.

The following running times are available:

- Short (16 minutes)
- Medium (32 minutes)
- Long (96 minutes)

▶ Select a running time.
The selected programme will start.

ENERGIZING COMFORT

Overview of the ENERGIZING COMFORT programme
Programme overview:

Programme	Function
Refresh	Can make targeted changes to the interior climate to refresh vehicle occupants. Cooling airflow and ionisation purify the air. The vehicle interior is illuminated with cool colours and the seats are ventilated.
Warmth	Can increase the comfort level of the vehicle occupants. The vehicle's panel, seat and steering wheel heating produce a cosy warmth. The air is purified using ionisation and a pleasant fragrance is released. The vehicle interior is illuminated with warm lighting.
Vitality	Can counteract diminishing attentiveness in monotonous driving situations. Fast-paced music and a vitalising massage provide invigorating stimulation for the vehicle occupants. The air is purified using ionisation and a pleasant fragrance is released. The vehicle interior is illuminated in a stimulating hue and the seat is ventilated.
Pleasure	Can promote a positive mood in the vehicle occupants as well as mental and physical regeneration. Moderately fast music is played and a massage programme is activated. The air is purified using ionisation and a pleasant fragrance is released. The vehicle interior is illuminated with amicable lighting.
Well being	Can aid the physical and mental relaxation of vehicle occupants. A back massage combined with local warmth provide relaxation. The air is purified using ionisation and a pleasant fragrance is released. The audio player plays selections of calming music and the vehicle interior is illuminated with pleasant lighting.

Programme	Function
Training	Can counteract the onset of muscle tension, limbs falling asleep or stress with targeted relaxation or stimulation exercises. The exercises are demonstrated in short videos. The air is purified using ionisation and a pleasant fragrance is released. The vehicle interior is illuminated with lighting appropriate to the exercise. The training consists of audio content and a brief animation. The audio content is conceived so that it can also be played back when you are driving. The animation is only shown when the vehicle is driving slower than 5 km/h. The animation is hidden at higher speeds. Always observe the traffic conditions if you are training when driving.
Tips	The system gives tips for possible exercises or measures for improving the comfort level of the vehicle occupants. Playback is purely aural. By selecting the desired area of the body you can receive targeted tips for the comfort level of this area.

ⓘ Please note that the available programmes and the associated functions depend on your vehicle equipment. Depending on your equipment, fewer functions may be available.

Starting the ENERGIZING COMFORT programme

⚠ **WARNING** Increased risk of an accident when using the ENERGIZING COMFORT programme Tips and Training

If you use the ENERGIZING COMFORT programme Tips and Training when you are driving, you could be distracted from the traffic situation.

- ▶ Only carry out exercises when the traffic circumstances permit.
- ▶ Make sure that you are always aware of the traffic situation around you when listening to the tips.

Requirements:

- The ignition is switched on.

Multimedia system:

→ Comfort ▸▸ ENERGIZING COMFORT

Starting the ENERGIZING programme

- ▶ Select a programme.
- ▶ Select Start.
  The selected programme will run for ten minutes.

ⓘ If, during an active programme, a function requirement is no longer met, a corresponding message appears. The active programme is cancelled.

Selecting the seat for the ENERGIZING programmes

- ▶ Select a programme.
- ▶ Select Seats.
- ▶ Select the desired seat.
  When the ENERGIZING programme starts, it starts for the selected seat.

Configuring ENERGIZING programmes

- ▶ Select a programme.
- ▶ Select ☼.
- ▶ Switch the functions included in the programme on or off.

Starting the training programme

- ▶ Select Training.

The following training programmes are available:

- Muscle stimul.
- Muscle relax.
- Balance

- ▶ Select a programme.
  The programme starts.

ⓘ The animation for demonstration of the exercises is only shown when the vehicle is stationary or when you are driving slower than 5 km/h. At higher speeds the picture is hidden and you will only be able to hear the instructions.

Starting tips

- ▶ Select Tips.

The following categories are available:

- Upper body
- Lower back
- Head
- Shoulders
- Pelvis

- ▶ Select the desired area of the body ▶.
  Playback of the tip for this area of the body starts.
- ▶ Select ■ to stop playback of the tip.

ⓘ You receive a tip for each option. To listen to the next tip, again select a desired category.

ENERGIZING COACH

Function of the ENERGIZING COACH

Requirements:

- The ENERGIZING COACH (ENERGIZING COACH) service is activated in the Mercedes me portal or the Mercedes me app.

With ENERGIZING COACH you can evaluate the driving and driver situation. Depending on the situation, it offers recommendations for the start

of an appropriate ENERGIZING COMFORT programme.

The following programs could be suggested:

- Vitality

  As an activating program in monotonous driving situations or for long journey times, for example.

  Information on the vitality program see (→ page 347).

- Joy

  As a balancing program in demanding driving situations.

  Information on the pleasure program see (→ page 347).

By connecting a GARMIN fitness tracker, for example the GARMIN vívosmart® 3, additional information can be entered into the evaluation for the recommendation of an ENERGIZING comfort program. The additional information includes the stress level, that is calculated by the fitness tracker. The stress level is based primarily on the pulse.

Requirements for the integration of additional information via a GARMIN fitness tracker:

- Your fitness tracker is connected with your GARMIN account.
- Your GARMIN account is connected with your Mercedes me account.

If you wear your GARMIN fitness tracker at night also, the sleep data is included in the evaluation of the ENERGIZING COACH.

Requirement for the integration of the sleep data:

- The GARMIN fitness tracker is synchronised with the GARMIN account before the beginning of the journey.

ⓘ If ATTENTION ASSIST determines an excessive lack of attention, ENERGIZING COACH makes no further suggestions. Further information about ATTENTION ASSIST (→ page 251).

Calling up the ENERGIZING COACH display

Multimedia system:

↪ ⌂ ▸▸ Comfort

▶ Select ENERGIZING COACH.
Your current pulse as well as an evaluation of your pulse for the last 30 minutes driving time are shown.

A corresponding error message is shown if there is no mobile phone connected or no pulse can be sent to the system for an extended period.

ⓘ Only pulse values in the range of 30-140 bpm are shown on the media display. The pulse values have no medical validity but are only informative in nature and are therefore also not required to be accurate.

▶ In the event of an error message make sure that the following requirements are fulfilled:
- The fitness tracker is connected with your GARMIN account.
- Your GARMIN account is connected with your Mercedes me account on your mobile phone.

- The mobile phone is connected as the main phone to the multimedia system (→ page 400).

Navigation

Switching navigation on

Multimedia system:

→ ⌂ » Navigation (Navigation)

- Alternatively: press the NAVI MAP button.
  The map appears. The current vehicle position is shown. The navigation menu is shown.

  The navigation menu is hidden if route guidance is active.

Showing/hiding the navigation menu

→ ⌂ » Navigation

If route guidance is not active the map appears. The navigation menu is shown.

The navigation menu is hidden if route guidance is active.

- **To show:** tap on the touchscreen.

or

- Press the Touch Control or the touchpad.
- **To hide:** the navigation menu is hidden automatically.

Navigation overview



Example: digital map with navigation menu

1. To enter a POI or address and additional destination entry options
2. To interrupt route guidance (if route guidance is active)
3. To repeat a navigation announcement and switch navigation announcements on or off
4. To call up the ON ROUTE menu
   - To show Route overview
   - To select Alternative routes
   - Report traffic incident (Car-to-X)
   - To call up the TRAFFIC menu
   - ◇ To show Traffic announcements
   - ◇ To show Area announcements
   - ◇ To show Live Traffic Subscription Info
   - To show Route list
   - To call up the POSITION menu
   - ◇ Store position
   - ◇ To show Compass
   - ◇ To show Qibla (available in selected countries)
5. Quick-access and settings

- To show Traffic
- To show Parking
- To show Motorway information
- Via Advanced options to use View, Announcements and Route

ⓘ The options are not available in all countries.

ⓘ You can enter 3 word addresses in the online search (→ page 358). This option is not available in all countries.

Destination entry

Notes on destination entry

⚠ WARNING Risk of distraction from operating integrated communication equipment while the vehicle is in motion

If you operate communication equipment integrated in the vehicle when driving, you will be distracted from the traffic situation. This could also cause you to lose control of the vehicle.

- ▶ Only operate this equipment when the traffic situation permits.
- ▶ If you cannot be sure of this, stop the vehicle whilst paying attention to road and traffic conditions and operate the equipment with the vehicle stationary.

You must observe the legal requirements for the country in which you are currently driving when operating the multimedia system.

Entering a POI or address

⚠ WARNING Risk of distraction from information systems and communications equipment

If you operate information and communication equipment integrated in the vehicle when driving, you will be distracted from the traffic situation. This could also cause you to lose control of the vehicle.

- ▶ Only operate this equipment when the traffic situation permits.
- ▶ If you cannot be sure of this, stop the vehicle whilst paying attention to road and traffic conditions and operate the equipment with the vehicle stationary.

You must observe the legal requirements for the country in which you are currently driving when operating the multimedia system.

Requirements:

- **For the online search:** Mercedes me connect is available.
- You have set up a user account in the Mercedes me portal.
- The vehicle has been activated for use of Mercedes me connect and you have accepted the terms and conditions for the service.

  Further information can be found at: http://www.mercedes.me
- The service has been activated.

Multimedia system:

Navigation ▸▸ Where to?



On-board search with the keypad

Destination entry uses the on-board search of the database stored in the multimedia system.

The country in which the vehicle is located is set 1.

▶ Enter the POI or the address using the keyboard (in the image) or using handwriting recognition 6 in input line 2. The entries can be made in any order.

During destination entry, suggestions are offered in 3 by the multimedia system. Destination selection takes place in list 3 or with OK 5.

If the multimedia system is equipped with a small display, calling up list 3 is carried out using a list symbol at the top right.

The following entries can be made, for example:

- City, street, house number
- Street, town

- Postcode
- POI name
- POI categories, e.g. Filling station
- Town, POI name
- Telephone number, if this is available for the POI
- Contact name

Example of quick address entry:

- If you are searching for Königsstraße in Stuttgart, for example, you can enter STUT and KÖN.
- If you are searching for a POI in the United Kingdom, for example, you can enter THE SHARD.

  If you would like to try out both examples, you may also need to change the country.

▶ Alternatively, use voice input ⑧.

▶ **To switch to handwriting recognition:** select ⑥.

▶ Write the character on the touchpad. The letters can be written next to each other or above each other (→ page 330).

▶ **To return to entry using the keyboard:** select ⌨.

or

▶ Press the touchpad.

▶ **To delete an entry:** select ④.
The characters are deleted individually.

or

▶ If characters have been entered in ②, select ⊗ next to the input line.
The complete entry is deleted.

▶ **To switch to upper-case or lower-case letters:** select ⑪.

▶ **To switch to digits, special characters and symbols:** select ⑩.
123 changes to ABC.

Display ⑪ changes to #+=.

▶ Select ⑪ and switch to additional special characters.

▶ **To enter a space:** select ⑦.

▶ **To set the language:** select ⑨.

▶ Select the language.

ⓘ This function is useful for countries in which several character sets are supported. An example is Russia, which uses Cyrillic and Latin characters.

▶ **To change the country:** select country indicator ①.

▶ Enter the country indicator, e.g. F for France.
The list is filtered.

▶ Select the country on list ③.
The destination can be entered.

▶ **To accept a destination:** select the destination in list ③.

▶ If the destination is ambiguous, select the destination in the list.
The destination address is shown. The route can be calculated.

Using online search

ⓘ Requirements: there is an Internet connection.

Further information on Mercedes me: http://www.mercedes.me

Online search is not available in all countries.

Destination entry uses online map services. If the on-board search finds no suitable destinations or if you change countries, the online search is available.

For the destination you can enter an address, a POI or a 3 word address.

ⓘ Enter a 3 word address (→ page 358).

▶ Select country indicator ①.

▶ Select the provider for the online service from the countries list.

or

▶ If the on-board search delivers no results, enter the destination in the input line. The entry order is not relevant, e.g. street and town. Use the functions described for the on-board search.
The search results are displayed.

▶ Select the destination in the list.
The detailed view for the route is displayed.

Selecting previous destinations
Requirements:

- Previous destinations are stored.
- **For destination suggestions:** you have created a profile (→ page 317).
- The Allow destination suggestions option is switched on (→ page 322).
- The multimedia system has already gathered sufficient data in order to show destination suggestions.

Multimedia system:

↴ ⌂ » Navigation » 🔍 Where to? » PREV. DESTINATIONS

The following entries can be selected in the previous destinations:

- Destination suggestions (→ page 376)
- Destinations
- Routes

▶ Select the destination or route
The destination address is shown. The route can be calculated.

ⓘ You can save a previous destination or a destination suggestion as a favourite (→ page 376).
You have fast access to the destinations via the favourites (→ page 360).

Selecting a POI
Requirements:

- **For use of personal POIs:** a USB device is connected with the multimedia system.
- Personal POIs with the GPS Exchange format (.gpx) have been saved in the "PersonalPOI" folder on the USB device.

Multimedia system:

↴ ⌂ » Navigation » 🔍 Where to? » POIS

Searching using categories (no route guidance)

▶ Select the category.

or

▶ Select All categories.

- Select the category and the sub-category (if available).
  The search takes place in the vicinity of the vehicle's current position. The search result are sorted by distance in ascending order.
  The POIs show the following information:
  - direction of the linear distance to the POI (arrow)
  - name of POI
  - linear distance to the POI
- **To filter according to categories or in search results:** enter a search entry in the Search text field.
- Select a POI from the list.
  The destination address is shown. The route can be calculated.

Searching using categories (route guidance active)

- Select the category.

or

- Select All categories.
- Select the category and the sub-category (if available).
- **To filter according to categories or in search results:** enter a search entry in the Search text field.
- Select the search positions In the vicinity, Near destination or Along the route.
- If there are intermediate destinations for the route and Near destination has been selected, select the search position in the route overview.
- Select a POI from the list.
  The destination address is shown. The route can be calculated.

Searching for personal POIs

- Select Personal POIs.
- Select a category.
- If route guidance is active, select a search position In the vicinity, Near destination or Along the route.
- Select a personal POI.
  The destination address is shown. The route can be calculated.

or

- Enter a search entry into the search field and filter the list.
- Select a personal POI.

Editing personal POI categories

- Select a personal POI category from the list .
  A menu opens.
- **To change a name:** select Change name.
- Enter the name.
- Select OK.
- **To change a symbol:** select Change icon.
- Select a symbol.
- **To delete a personal POI category:** select Delete.
- Select Yes.

Configuring categories for quick-access

You can configure the categories for quick-access.

If you calculate the route, for example, the first three of these categories can be selected as symbols.

- Select All categories.
- Select the category and the sub-category (if available).
- Select ☆ or ★.
  ☆ adds the category.
  ★ removes the category.
- If all available quick-access positions are full, select the category to be replaced.

Selecting a contact for destination entry
Requirements:

- A mobile phone is connected to the multimedia system (→ page 400).

Multimedia system:

↪ ⌂ ▸▸ Navigation ▸▸ 🔍 Where to? ▸▸ CONTACTS

Using the contact list

- Select a contact.
  The contact details are displayed.
- Select the address.

Using search entry

- Enter a name or telephone number, for example, into the search field.
- Select OK.
- Select the contact.
- Select the address.
  The destination address is shown. The route can be calculated.

ⓘ Route guidance to a contact address is reliable in the following cases:

- the contact address is complete.
- the contact data matches the map data in the digital map.

Entering geo-coordinates

Multimedia system:

↪ ⌂ ▸▸ Navigation ▸▸ 🔍 Where to? ▸▸ GEO-COORDINATES

- Select Latitude or Longitude.
- Select geo-coordinates as latitude and longitude coordinates in degrees, minutes and seconds. To do this swipe up or down respectively.
  The map shows the position.
- Confirm the entry with OK.
- **To set the destination:** select ⚠ or ⚠.
- Calculate the route (→ page 361).

Entering the destination as a 3 word address
Requirements:

- Searching for a destination using 3 word addresses is possible in the online search (→ page 353).
- The media display shows an Internet connection with a double-arrow symbol in the status line.

ⓘ Searching for a destination using 3 word addresses is not possible in all countries and in all languages.

Multimedia system:

↪ ⌂ ▸▸ Navigation ▸▸ 🔍 Where to?

- Select the country indicator.

▶ Select the provider for the online service from the countries list.

or

▶ If the on-board search delivers no search results, enter the destination address as a 3 word address. Separate each of the words with a full stop.
The search results are displayed.
▶ Select the destination in the list.
The destination address is shown. The route can be calculated.

ⓘ 3 word addresses from what3words are an alternative addressing system for multilingual georeferencing of global locations with a resolution of three metres. Using this grid, locations on the Earth's surface are included which do not have a building address such as street and house number, for example.

The Brandenburg Gate has this language dependent 3 word address:

- German: tapfer.gebäude.verliehen
- English: that.lands.winning
- French: posteaux.bobineur.ombrant

3 word addresses are unique, easy to remember and suffice for most routine applications.

You can convert addresses to 3 word addresses and back again:

- at the website http://what3words.com
- in the what3words apps

Selecting a destination on the map

Multimedia system:

↝ ⌂ ▸▸ Navigation

▶ Move the map (→ page 384).
▶ **Using the touchscreen:** press and hold on the touchscreen.
The destination address is shown.

If several destinations are located at the selected position, a list shows the available roads and POIs.

▶ Select the destination in the list.
The destination address is shown. The route can be calculated.

▶ **Using the touchpad:** when the crosshair marks the destination, press and hold on the control element.
The destination address is shown.

If several destinations are located around the crosshair, a list shows the available roads and POIs.

▶ Select the destination in the list.
The destination address is shown. The route can be calculated.

Showing POIs in the vicinity of the map

If several destinations are located around the crosshair, the function is available.

▶ Select •••.
▶ Select POIs in the vicinity.
The map appears.
▶ Swipe left or right on the control element.
The previous or next POI is highlighted on the map. The name or the address is shown.
▶ Select the POI symbol.

or

- **To filter the display according to the POI category:** scroll on the control element.
- Select the POI category.

Selecting a destination from favourites
Requirements:

- Destinations are saved as favourites.

  Save a previous destination or a destination suggestion as a favourite (→ page 376).

Multimedia system:

→ ⌂ ›› Navigation ›› 🔍 Where to? ›› FAVOURITES

- Select a favourite.
  The destination address is shown. The route can be calculated.

The following options are available in the favourites menu:

- Saving addresses for home and work
- Creating favourites
- Deleting favourites

- **If no address has been saved for home and work:** select Home or Work.
- Confirm the prompt with Yes.
- Enter the favourite as a POI or address (→ page 353).
- **To save a favourite:** select Add favourites.
- Enter the favourite as a POI or address (→ page 353).

or

- If all the positions in the favourites are full, first select a favourite which is to be overwritten (→ page 323).
- Follow the instructions provided.
- **To delete a favourite:** select ⊙ for a destination.
- Select Delete.

or

- Press on a favourite until the OPTIONS menu is shown.
- Select Delete.

Selecting received destinations
Requirements:

- There is an Internet connection.
- A destination has been sent to the vehicle.

Multimedia system:

→ ⌂ ›› Navigation ›› 🔍 Where to? ›› RECEIVED DESTINAT.

The vehicle can receive destinations from services or apps.

- Select a destination.
  The destination address is shown. The route can be calculated.

ⓘ You can save a received destination in the favourites (→ page 376).
You have fast access to the destinations via the favourites (→ page 360).

Deleting a received destination

- **To delete a destination:** select ⊙ for a destination.
- Select Delete.
- Select Yes.
- **To delete all destinations:** select •••.
- Select Delete all.
- Select Yes.

Route

Calculating a route

Requirements:

- The destination has been entered.
- The destination address is shown.

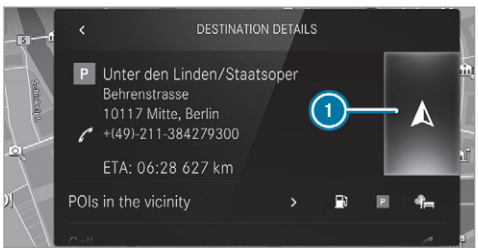

1 No route yet
A route has been mapped

▶ Select .
The route to the destination is calculated. The map shows the route. Route guidance then begins.

or

▶ Select .
If a route is already mapped, a prompt is shown.

▶ Select Set as intermediate dest..
The selected destination address is set as the next intermediate destination. Route guidance begins.

If there are already four intermediate destinations, the multimedia system asks whether intermediate destination 4 should be deleted. Confirm the prompt with Yes.

or

▶ Select Start new route guidance.
The selected destination address is set as a new destination. The previous destination and the intermediate destinations are deleted. Route guidance to the new destination begins.

Searching for POIs in the vicinity of the destination shown

ⓘ The POI symbols to the right of POIs in the vicinity show the first three categories for quick-access. You can configure these categories (→ page 356).

▶ Select a POI symbol.
The search results are displayed.

▶ Select a POI.
The destination address is shown. The route can be calculated.

or

▶ Select POIs in the vicinity .

▶ Search using categories, enter a search entry or search for a personal POI (→ page 356).

▶ Select a POI.
The destination address is shown. The route can be calculated.

Other menu functions

▶ **To save the destination:** select .

▶ Select an option.
The following options are available:

- Save in "Previous destinations"
- Save as favourite
- Save as "Home"
- Save as "Work"

- **To call the destination:** if a telephone number is available, select Call.
- **To share the destination using NFC or QR code:** select Share via NFC or QR code.
- Hold the NFC area of the mobile phone (see manufacturer's operating instructions) on the mat or place the mobile phone on it (→ page 402).

or

- Hold the mobile phone near to the multimedia system and scan the QR code.
- **To call up an Internet address:** if a web address is available, select www.
- **To show on the map:** select Display on the map.

Selecting a route type

Multimedia system:

↳ ⌂ ›› Navigation ›› ⚙ ›› Advanced ›› Route

- Select the route type.

If no route has been created, the next route is calculated on the basis of the new route type.

If a route has already been created, the route is calculated on the basis of the new route type.

The following route types are available:

- Fast

  A route with a quick journey time is calculated.
- Short

  A route with a short driving distance is calculated.
- Eco

  An economical route is calculated. The journey time may be somewhat longer than for quicker routes.
- Trailer

  The option is available if a trailer has been coupled with the vehicle.

  A prompt is shown in the multimedia system. Confirm the prompt.

  The route is optimised for trailer operation with a maximum speed of 80 km/h.

Traffic information can be taken into account for the route types:

- Select Dynamic route guidance ›.
- Select Automatic, After asking or Off.

Explanation of the options:

- Automatic

  The route is calculated with the currently set route type.

  Traffic messages via Live Traffic Information or FM RDS-TMC are taken into account (→ page 377).

  Live Traffic Information and FM RDS-TMC are not available in all countries.
- After asking

  A prompt appears when a new route is detected with a shorter journey time based on traffic reports. You can continue to use the current route or use the dynamic route instead (→ page 363).
- Off

  No traffic reports are taken into account for the route.

Calculating alternative routes

- Activate Suggest alternative route.
  The display button is activated. Alternative routes are calculated for every route.
- Select an alternative route (→ page 366).

Accepting a detour recommendation after a prompt
Requirements:

- After asking is switched on (→ page 362) in the DYNAMIC ROUTE GUIDANCE menu.
- Route guidance is active.
- There are traffic reports for the current route.

If a new route with a shorter driving time is determined, the current and new routes will be shown.

The notification is shown in another application. Confirm the notification.

- **To accept the new route:** select Accept recommended detour.
- **To maintain the current route:** select Keep to current route.

Selecting route options
Multimedia system:
→ ⌂ ▸▸ Navigation ▸▸ ⚙ ▸▸ Advanced ▸▸ Route

Avoiding areas

- Select Avoid options.
- Select Avoid areas (→ page 387).

Avoiding or using motorways, ferries, tunnels, motorail trains, unpaved roads

- Select Avoid options.
- Activate or deactivate the avoid option.
  To avoid: the display button is activated. The route avoids motorways, for example.

  To use: the display button is off. The route takes motorways into consideration, for example.

  These route options are not available in every country.

  The selected route options cannot always be taken into account. Therefore, a route may include a ferry, for instance, even though the Avoid ferries avoid option is enabled. A message then appears and you will hear a corresponding message.

Avoiding or using toll roads

- Select Avoid options.
- Select Toll roads.
- Switch Avoid all on or off.
  To avoid: the display button is activated. The route avoids all toll roads.

  To use: the display button is off. The route takes into account all roads that require the payment of a usage fee (toll).

or

- **To avoid a type of payment:** select Avoid.
  The route avoids all toll roads with the selected method of payment.
- **To use a type of payment:** select Use.
  The route takes into account all toll roads with the selected method of payment.

These route options are not available in every country.

Avoiding or using roads requiring a special toll sticker

▶ Select Avoid options.
▶ Select Vignette roads.
▶ Switch All on or off.

or

▶ Activate or deactivate the countries.
To avoid: the display button is activated. The route avoids roads requiring a special toll sticker in the selected countries.
To use: the display button is off. The route takes into account roads in the selected country which require you to pay a time-based fee (vignette). A vignette allows for the use of a route network for a limited time period.

ⓘ These route options are not available in every country.

Selecting notifications for the route Requirements:

- **For an audible indication when approaching a personal POI:** the USB device contains personal POIs.
- The USB device is connected with the multimedia system.
- The category in which the personal POI belongs is activated.

Multimedia system:

↳ ⌂ ⏩ Navigation ⏩ ⚙ ⏩ Advanced ⏩ Announcements

▶ Switch No driving recomm. on or off.
No navigation announcements are issued when the display button is switched on.
▶ **To select a navigation announcement:** select an option ● under the DRIVING RECOMMEND. category.

The following options are available:

- Acoustic signal only
  In place of the spoken navigation announcement you hear a gong. The gong signals an upcoming driving manoeuvre and also sounds during the driving manoeuvre.
- Reduced driving recomm.
  If a navigation announcement is available, you hear a brief announcement, e.g. "turn right".
- Detailed driving recomm.
  If a navigation announcement is available and the Announce street names option is switched on, you hear a complete announcement, e.g. "In 200 m at the end of the street turn right into Station Road".

▶ **To have street names announced during a driving manoeuvre:** switch on Announce street names.
▶ Select Reduced driving recomm. or Detailed driving recomm..
The name of the street into which you should turn is announced.

ⓘ The options in the DRIVING RECOMMEND. category are not available in every country and in all languages.

Selecting messages for TRAFFIC

▶ Activate a message.
The display button is activated.

The following options are available:

- Traffic incidents

  Traffic incidents are announced, e.g. roadworks and road blocks.

  This function is not available in all countries and languages.
- Announce warnings

  Warning messages are announced, e.g. before tailbacks that pose a risk (if available).

  This function is not available in all countries and languages.

Audible indication when approaching a personal POI

▶ Select the Personal POIs option in the ALERTS category.

▶ Activate a category.
The display button is activated. When approaching a personal POI in this category an audible indication will be issued.

Showing destination information for the route
Requirements:

- A destination is entered.

Multimedia system:

→ ⌂ ›› Navigation ›› ⚲

▶ Select Route overview.
When route guidance is active, the destination and intermediate destinations are shown, if these have been entered and not yet been passed.

The route can include up to four intermediate destinations.

▶ Select a destination or an intermediate destination.

The following information is displayed:

- Remaining driving distance
- Time of arrival
- Remaining journey time
- Name, destination address
- Phone number (if available)
- Web address (if available)

Planning routes
Multimedia system:

→ ⌂ ›› Navigation
›› ⚲ ›› Route overview

▶ Select Set intermediate destination.

▶ Enter the intermediate destination as a POI or address, for example (→ page 353).

▶ Select the intermediate destination.
After selection of an intermediate destination, the route overview is shown again.

▶ Calculate the route with intermediate destinations(→ page 366)

ⓘ If there are already four intermediate destinations, delete an intermediate destination (→ page 365).

Editing a route with intermediate destinations
Requirements:

- The destination and at least one intermediate destination have been entered.

Multimedia system:

→ ⌂ ⏩ Navigation

⏩ 🛰 ⏩ Route overview

- **To change the sequence of destinations:** select ⊙ for a destination.
  A menu opens.
- Select Move.
  ✓ is highlighted.
- Move the intermediate destination or the destination with ∧ or ∨ to the desired position.
- Tap on ✓.
- **To delete a destination:** select ⊙ for an intermediate destination or destination.
- Select Delete.
  The destination is deleted.

Calculating a route with intermediate destinations

Requirements:

- The destination and at least one intermediate destination have been entered.

Multimedia system:

→ ⌂ ⏩ Navigation

⏩ 🛰 ⏩ Route overview

- Select Start route guidance.

or

- If the route has been edited, select To Navigation ↩.
- Confirm the prompt with Yes.
  The route is calculated. Route guidance begins.

Displaying the route list

Multimedia system:

→ ⌂ ⏩ Navigation ⏩ 🛰

- Select Route list.
  The route sections are displayed. The current vehicle position is marked on the map.

  The current vehicle position is shown with the following information:
  - The ▲ symbol for the current vehicle position is displayed.
  - The name of the road on which you are currently driving is shown.
  - The road number of the road on which you are currently driving is shown.

  The route list is updated during the journey.
- **To show route sections:** swipe up or down on the control element.
  The route section is shown on the map.

Selecting an alternative route

Requirements:

- The Suggest alternative route option is switched on (→ page 362).

Multimedia system:

→ ⌂ ⏩ Navigation ⏩ 🛰

- Select Alternative routes.
  The routes are displayed in accordance with the setting made in the route settings.

  The routes are numbered.
- Select the alternative route.
- **To show the route on the map:** select Display on the map.
- Move the map (→ page 384).
- Set the map scale (→ page 384).

▶ **To avoid or use route options:** select [•••].

▶ Switch the route option, e.g. Motorways, on or off.
To avoid: the display button is activated. The alternative route avoids motorways.
To use: the display button is off. The alternative route uses motorways.

Activating a commuter route
Requirements:

- You have created a profile (→ page 317).
- The Allow destination suggestions option is switched on (→ page 322).
- The Activate commuter route option is switched on.
- The multimedia system has gathered sufficient data in order to show destination suggestions.
- Routes have been learned for these destination suggestions.

ⓘ This commuter route is not available in all countries.

Multimedia system:
↝ [⌂] ›› Navigation ›› [⚙] ›› Advanced ›› Route

▶ Activate Activate commuter route.
The display button is activated. The navigation system automatically detects that the vehicle is on a commuter route. It automatically starts a route guidance without voice output.
For the daily commuter route, traffic incidents on the route are also reported when driving without active route guidance.

Switching the automatic filling station search on/off
Multimedia system:
↝ [⌂] ›› Settings ›› Vehicle

▶ Switch Filling station search on or off.
When the fuel reserve level is reached, and the display button is switched on, a message appears to start searching for filling stations.

Starting an automatic filling station search
Requirements:

- The automatic filling station search is activated (→ page 367) .

Driving situation
The fuel level in the fuel tank reaches the reserve fuel level.

The following notification is shown in the media display Reserve fuel Tap here to search for filling stations.

▶ Confirm the notification.
The automatic filling station search begins. The available filling stations along the route or in the vicinity of the vehicle's current position are displayed.

▶ Select a filling station.
The address of the filling station is displayed.

▶ Calculate the route (→ page 361).
The filling station is set as the destination or the next intermediate destination.

▶ **If there are already four intermediate destinations:** select Yes in the prompt.
The filling station is entered in the route overview. Intermediate destination 4 is deleted. Route guidance begins.

Starting the automatic service station search
Requirements:

- ATTENTION ASSIST and the Suggest rest area function are activated (→ page 251).
- There are service stations along the route section ahead.

Driving situation
The following notification is shown in the media display ATTENTION ASSIST Tap here to search for rest areas.

▶ Confirm the notification.
The service station search starts. The available service stations along the route or in the vicinity of the vehicle's current position are displayed.

▶ Select a service station.
The service station address is displayed.

▶ Calculate the route (→ page 361).
The service station is set as the destination or the next intermediate destination.

▶ **If there are already four intermediate destinations:** select Yes in the prompt.
The service station is entered in the route overview. Intermediate destination 4 is deleted. Route guidance begins.

Showing a stored route on the map
Requirements:

- A USB device with stored routes is connected with the multimedia system (→ page 442).
- The route is stored in the "Routes" folder with the GPS Exchange format (.gpx).

Multimedia system:
↳ ⌂ ⏩ Navigation ⏩ 🔍 Where to? ⏩ STORED ROUTES

▶ Select a route.

▶ Select Display on the map.

▶ Move the map (→ page 384).

Starting a saved route
Requirements:

- A USB device with stored routes is connected with the multimedia system (→ page 442).
- The route is stored in the "Routes" folder with the GPS Exchange format (.gpx).

Multimedia system:
↳ ⌂ ⏩ Navigation ⏩ 🔍 Where to? ⏩ STORED ROUTES

▶ Select a route.

▶ Select Start route guidance from the beginning or Start route guidance from current location.
Route guidance starts.

ⓘ The route can be saved with ☆ in the menu (→ page 361).

Recording a route
Requirements:

- A USB device is connected with the multimedia system (→ page 442).

Multimedia system:

Navigation ▸▸ Where to? ▸▸ STORED ROUTES

- **To start recording:** select Start to record new route.
  A red recording symbol is shown.
  The route is stored on the USB device.
- **To stop recording:** select End recording.

Saving a recorded route
Requirements:

- A USB device is connected with the multimedia system (→ page 442).

Multimedia system:

Navigation ▸▸ Where to? ▸▸ STORED ROUTES

- Select a route.
- Select ☆.
- Select Save in "Previous destinations".
  The route is stored in the "Previous destinations" memory and can be called up from there for route guidance.

Editing a stored route
Requirements:

- A USB device with stored routes is connected with the multimedia system (→ page 442).

Multimedia system:

Navigation ▸▸ Where to? ▸▸ STORED ROUTES

- Select a route with ⊙.
- **To enter a name:** select Change name.
- Enter the name.
- Select OK.

or

- When the name has been changed, press the ↩ button.
- Select Yes.
- **To delete a route:** select Delete.
- Select Yes.

Route guidance

Notes on route guidance

WARNING Risk of distraction from operating integrated communication equipment while the vehicle is in motion

If you operate communication equipment integrated in the vehicle when driving, you will be distracted from the traffic situation. This could also cause you to lose control of the vehicle.

- Only operate this equipment when the traffic situation permits.
- If you cannot be sure of this, stop the vehicle whilst paying attention to road and traffic conditions and operate the equipment with the vehicle stationary.

You must observe the legal requirements for the country in which you are currently driving when operating the multimedia system.
Route guidance begins once a route has been calculated.

The road and traffic rules and regulations always have priority over multimedia system driving instructions.

Driving instructions are:

- Navigation announcements
- Route guidance displays
- Lane recommendations

If you do not follow the driving instructions or if you leave the calculated route, a new route is calculated automatically.

Driving instructions may differ from the actual road and traffic conditions if:

- The route is diverted
- The direction of a one-way street has been changed

For this reason, you must always observe road and traffic rules and regulations during your journey as well as the prevailing traffic conditions.

The route may differ from the ideal route due to the following:

- Roadworks
- Incomplete digital map data

Notes on GPS reception

The correct function of the navigation system depends amongst other things on GPS reception. In certain situations GPS reception can be impaired, defective or even not possible, e.g. in tunnels or in multi-storey car parks.

Changing direction overview

Changes of direction are shown in the following displays:

- Detailed image of the junction

  The display appears when you drive into a junction.
- 3D image

  The display appears when driving on junction-free, multi-lane roads, for example on motorway exits and motorway interchanges.

Detailed image of the junction

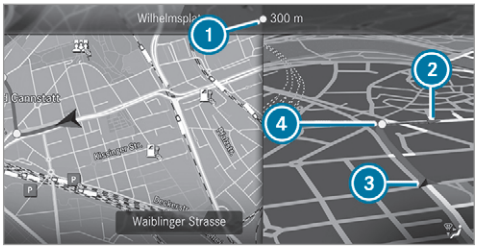

1. Current distance to the change of direction
2. Driving manoeuvre
3. Current vehicle position
4. Manoeuvre point

3D image

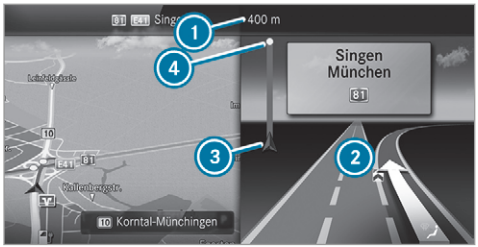

1 Current distance to the change of direction
2 Driving manoeuvre
3 Current vehicle position
4 Manoeuvre point

There are three phases when changing direction:

- Preparation phase

  If there is enough time between the changes of direction, the multimedia system prepares you for the upcoming change of direction. A navigation announcement is issued depending on the settings for driving recommendations, e.g. "Prepare to turn right".

  Select navigation announcements for driving recommendations (→ page 364).

  The map appears in full-screen mode.

  The status line shows: the direction information or the name of the road which is to be turned into and the distance to the change of direction.

- Announcement phase

  The multimedia system announces the upcoming change of direction depending on the settings for driving recommendations, e.g. by announcing "In 200 m at the end of the street turn right into Station Road".

  The display is split into two parts. The map is displayed on the left; on the right, there is a detailed image of the junction or a 3D image of the upcoming change of direction.

- Change-of-direction phase

  The multimedia system announces the imminent change of direction depending on the settings for driving recommendations, e.g. by announcing "Now turn right".

  The display is split into two parts.

  The change of direction takes place when the distance to manoeuvre point 4 is shown with 0 m and the symbol for vehicle position 3 has reached manoeuvre point 4.

  When the change of direction is complete, the map appears in full-screen mode.

ⓘ Changes of direction are also shown in the Instrument Display.

Lane recommendations overview

This display appears for multi-lane roads.

The multimedia system can show lane recommendations if the digital map contains the relevant data.

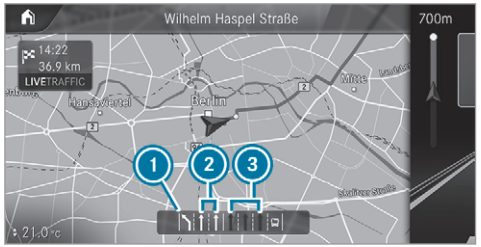

1 Recommended lane (white arrow, blue background)
2 Possible lanes (white arrow)
3 Lanes not recommended (grey arrow)

Explanation of the displayed lanes:

- Recommended lane 1
  In this lane, you will be able to complete both the next change of direction and the one after that.
- Possible lane 2
  In this lane, you will only be able to complete the next change of direction.
- Lane not recommended 3
  In this lane, you will not be able to complete the next change of direction without changing lane.

During the change of direction, new lanes may be added.

Bus lanes are also shown.

ⓘ Lane recommendations can also be displayed in the Instrument Display and in the Head-up Display.

Using motorway information
Requirements:

- The Motorway information option is switched on (→ page 387).



When driving on the motorway, upcoming motorway facilities 1 and available service facilities 2 are shown in the overview. These include car parks, service stations and motorway exits, for example.

▶ **To open the display:** select [›].
The entries are sorted according to increasing distance from the current vehicle position.
▶ **To close the display:** tap on the map.

or

▶ **To use motorway information:** select an entry.
▶ If several service facilities are available, select a service facility from the list.
The destination address and the map position are shown.
▶ Calculate the route (→ page 361).

or

▶ Search for a POI in the vicinity.

or

▶ Use other functions, e.g. save the destination address of the service facility.

Using quick-access for a destination information, alternative route and POIs
Requirements:

- The POI categories for quick-access are configured (→ page 356).



▶ If route guidance is active, select 1.
The address of the destination or the next intermediate destination is shown.

Using alternative routes

▶ Select Alternative route.
The routes are displayed in accordance with the setting made in the route settings.
The routes are numbered.

▶ Select the alternative route.

Setting a POI as an intermediate destination

▶ Select a category symbol, e.g. P for a car park.
▶ Select a POI from the list.
The selection takes place on the route. The destination address is shown. The route can be calculated.
▶ **To use POI categories for quick-access:** select a search position In the vicinity, Near destination or Along the route.
▶ Select a POI from the list.

or

▶ Enter a search entry into the search field and filter the list.
▶ Select a POI from the list.
The destination address is shown. The route can be calculated.

Saving the current vehicle position

▶ Select Store position.
The current vehicle position is saved to the "Previous destinations" memory.

Destination reached

Once the destination is reached, you will see the chequered flag. Route guidance is finished. The Navigation menu is shown.

When an intermediate destination has been reached, you will see the intermediate destination flag with the number of your intermediate destination. Route guidance is continued.

Switching navigation announcements on/off

▶ **To switch off:** turn the volume control on the steering wheel or next to the touchpad during a navigation announcement (→ page 328).
The Spoken driving recommendations have been deactivated. message appears.

or

▶ Show the navigation menu (→ page 351).
▶ Select .
The symbol changes to .
▶ **To activate:** select .
The current navigation announcement is played.

The symbol changes to [icon].

ⓘ This function can be added and called up from the favourites within the navigation category.

Switching navigation announcements on or off during a phone call

- ▶ Press the [home] button on the steering wheel or on the touchpad.

or

- ▶ Tap on [home] in the media display.
- ▶ Select Settings.
- ▶ Select System.
- ▶ Select Audio.
- ▶ Select Navigation and traffic announcements.
- ▶ Switch Driving recommendations during call on or off.
  When the option is switched on, the display button is activated.
- ▶ **To leave the menu:** select [back].

Adjusting the volume of navigation announcements

Multimedia system:

→ [home] ▸▸ Settings ▸▸ System ▸▸ Audio ▸▸ Navigation and traffic announcements

- ▶ Select Driving recommendation vol..
- ▶ Set the volume.
- ▶ **To leave the menu:** select [back].

Route guidance is active

- ▶ Turn the volume control on the steering wheel or next to the touchpad during a navigation announcement.

Switching audio fadeout on or off during navigation announcements

- ▶ Press the [home] button on the steering wheel or on the touchpad.

or

- ▶ Tap on [home] in the media display.
- ▶ Select Settings.
- ▶ Select System.
- ▶ Select Audio.
- ▶ Switch Audio fadeout on or off.
  When the option is switched on, the display button is activated.
- ▶ **To leave the menu:** select [back].

Repeating navigation announcements

Requirements:

- a route has already been created.
- route guidance is active.

Multimedia system:

→ Navigation (Navigation)

- ▶ Select [icon].
- ▶ Select [icon].
  The current navigation announcement is repeated.

ⓘ This function can be added and called up from the favourites within the navigation category.

Cancelling route guidance

Requirements:

- a route has already been created.
- route guidance is active.

- Show the navigation menu.
- Select [ ] in the navigation menu (→ page 352).

Overview of route guidance to an off-road destination

An off-road destination is within the digital map. The map contains no roads that lead to the destination.

You can enter geo-coordinates or a 3 word address for off-road destinations on the map. Route guidance guides you for as long as possible with navigation announcements and displays on roads that are known to the multimedia system.

Shortly before you reach the last known position on the map, you will hear the "Please follow the direction arrow" announcement, for example. The display shows a direction arrow and the linear distance to the destination.

Overview of route guidance from an off-road location to a destination

In an off-road position, the current vehicle position is located within the digital map on roads that are not available.

The following displays appear when route guidance begins:

- A message appears that the road is not on the map.
- A direction arrow showing the linear direction to the POI.

When the vehicle is back on a road known to the multimedia system, route guidance continues as normal.

Overview of off-road status during route guidance

Due to roadworks, for example, there may be differences between the data on the digital map and the actual course of the road. In such cases, the multimedia system will temporarily be unable to locate the vehicle's current position on the digital map. The vehicle is off-road.

When the vehicle is off-road, the following displays are shown:

- A message appears that the road is not on the map.
- A direction arrow showing the linear direction to the POI.

When the vehicle is back on a road known to the multimedia system, route guidance continues as normal.

Destination

Saving the current vehicle position

Multimedia system:

→ [ ] ›› Navigation ›› [ ] ›› Position

- Select Store position.
  The current vehicle position is saved to the "Last destinations" memory.

Using quick-access

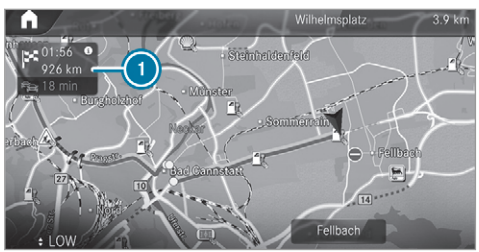

- If route guidance is active, select ①. The address of the destination or the next intermediate destination is shown.
- Select Store position.

Editing the previous destinations
Requirements:

- To edit destination suggestions: the Allow destination suggestions option is activated (→ page 322).
- The multimedia system has gathered sufficient data in order to show destination suggestions.

Multimedia system:
→ ⌂ » Navigation » 🔍 Where to? » PREV. DESTINATIONS

The following entries can be edited:

- Destination suggestions
- Destinations
- Routes

- **To no longer display a destination suggestion:** select ⊙ for a destination suggestion.
- Select Do not suggest.

Saving the last destination as a favourite

ⓘ After saving, the destination can be called up via the favourites (→ page 323).

- Select ⊙ for a destination.
- Select ☆ Save as favourite.
- **To save as a favourite:** select Save as favourite .
- **To save as "Home" address:** select Save as "Home" .
- **To save as "Work" address:** select Save as "Work" .

Deleting a previous destination

- **To delete a destination:** select ⊙ for a destination.
- Select Delete.
- Select Yes.

- **To delete all destinations:** select •••.
- Select Delete all.
- Select Yes.

Using external destinations and routes

External destinations and routes can be received from the following sources, for example:

- Mercedes-Benz Apps
- door-to-door navigation

A prompt appears on the media display. Received destinations and routes are saved in the previous destinations.

- **A destination has been received:** select Yes.
- Calculate the route.
- If route guidance is already active, select Set as intermediate dest. or Start new route guidance.

or

- If a destination was received with photo information, select Start route guidance.
- Calculate the route.

or

- If a destination has been received from an app, select Details.
- Calculate the route.
- **A route has been received:** select Yes.
- Select Start route guidance from the beginning or Start route guidance from current location.
  Route guidance starts from the selected position.

Route guidance with current traffic reports

Traffic information overview

ⓘ The services are not available in every country.

Traffic reports can be received with the following services:

- Live Traffic Information
- FM RDS-TMC

  It is not possible to use both services simultaneously.

  Live Traffic Information or FM RDS-TMC is displayed with a symbol.

ⓘ Hazard warnings can be received using the Car-to-X service.

ⓘ There may be differences between the traffic reports received and the actual road and traffic conditions.

Important information on Live Traffic Information:

- Current traffic reports are received via the Internet connection (for selected countries).
- The traffic situation is updated at short, regular intervals.
- In selected countries, the subscription service is available free of charge for a period of three years from the manufacturing date.

  Information from the service provider can be shown (→ page 378).

Registering Live Traffic Information:

- The service must be registered with Mercedes me (→ page 378).

  This secures the free-of-charge period of three years.

Information on the vehicle's position is regularly sent to Daimler AG. The data is immediately rendered anonymous by Daimler AG and forwarded to the traffic data provider. Using this data, traffic reports relevant to the vehicle's position are sent to the vehicle. The vehicle acts as a sensor for the flow of traffic and helps to improve the quality of the traffic reports.

If you do not want to transmit the vehicle position, you have the following options:

- You deactivate the service in the Mercedes me portal.
- You have the service deactivated at a Mercedes-Benz service centre.

Useful information on FM RDS-TMC:

- A FM RDS-TMC radio station broadcasts traffic reports alongside the radio programme.
- FM RDS-TMC is not available in all countries.

Showing information from the service provider for Live Traffic Information
Requirements:

- The vehicle is equipped with Live Traffic Information.

Multimedia system:

↳ ⌂ ⏩ Navigation ⏩ ⚲ ⏩ Traffic

- Select Provider information.
  The logo of the service provider for Live Traffic Information is shown.

  When the subscription for Live Traffic Information has expired then in selected countries FM RDS-TMC is available.

ⓘ Further information on Live Traffic Information can be called up on the home screen using Mercedes me & Apps (→ page 425).

Registering Live Traffic Information
Requirements:

- The vehicle is equipped with Live Traffic Information.
- You have a user account on the Mercedes me website.

The Live Traffic Information service must be registered. This secures the full period of three years.

- Create a user account at Mercedes me at: http://www.mercedes.me. A valid email address is required for this.
- Register the vehicle using the vehicle identification number (VIN).
- **To carry out the registration yourself:** connect the vehicle with your Mercedes me user account in the Mercedes me portal.
  A code is sent to the multimedia system.
- Enter the code into the multimedia system.
- Accept the general and specific terms of use.
- **Registration in the Mercedes-Benz service centre:** have the connection carried out at a Mercedes-Benz service centre.

Extending a Live Traffic Information subscription
Requirements:

- The vehicle is equipped with Live Traffic Information.
- You have a user account on the Mercedes me website.

- Call up the Mercedes me website.
- Call up the Mercedes me user account.
- Switch to the Mercedes me connect online store via the linked vehicle.
- Select the Live Traffic Information service.
- Select the renewal period.
- Add the product to the shopping basket.
- Accept the general and specific terms of use. Live Traffic Information remains activated for the selected extension period. Activation begins on the date of extension.

Showing traffic information
Requirements:

- The Traffic display is switched on (→ page 380).
- The following traffic displays are switched on (→ page 380):

  Traffic incidents

  Free-flowing traffic

Delay

Multimedia system:

↝ ⌂

▶ Select Navigation.

The map shows the following traffic information:

- traffic incidents, for example:
  - roadworks
  - road blocks
  - warning messages

  When route guidance is active, the symbols for traffic incidents will be shown in colour on the route. Off the route they are grey.
- warning message symbols:
  - symbol ⚠
  - road safety notes, e.g. when approaching the end of a traffic jam

    If the vehicle approaches a danger area on the route, a warning message is displayed on the map. In addition, an audible notification can follow a hazard warning.
- traffic flow information:
  - traffic jam (red line)
  - slow-moving traffic (orange line)
  - heavy traffic (yellow line)
  - free-flowing traffic (green line)
- display for traffic delays on the route lasting at least one minute

Displaying traffic incidents
Requirements:

- The Traffic incidents display is switched on (→ page 380).

Multimedia system:

↝ ⌂ ▸▸ Navigation ▸▸ ⚲ ▸▸ Traffic

▶ Select Traffic announcements.
If there are traffic reports, you will see a list. Traffic reports include accidents and other traffic events, for example. The list is sorted according to distance and shows the traffic reports received both on and off the route.

A traffic report shows the following information:

- Street number
- Traffic incident symbol
  On the route: coloured
  Off the route: grey
- Cause
- Street symbol for a traffic incident on the route
- Distance from current vehicle position

▶ Select a traffic report ›.
The detailed information is shown, for example the route section.

Showing traffic incidents in the vicinity of the map

▶ Select a traffic incident symbol on the map.
The details about the traffic incident are displayed.

▶ Select •••.

▶ Select Traffic incidents in vicinity.
The map shows the traffic incident symbols in the vicinity.

Traffic incident information is displayed in the status line:

- Traffic incident symbol

- Cause of the traffic incident, e.g. construction work
- Warning message (highlighted red)

▶ **To select a traffic incident symbol:** select < or >.
▶ **To select a map section:** tap on the touchscreen.

or

▶ Press the Touch Control or the touchpad.
▶ Move the map.
▶ **To return to the navigation map:** tap on ↩.

or

▶ Press the ↩ button on the Touch Control or on the touchpad.

Switching the traffic information display on
Multimedia system:

→ ⌂ ▸▸ Navigation ▸▸ ⚙

▶ Activate Traffic.
The display button is activated.

Activating Incidents, Free Flow and Delay

▶ Select Advanced.
▶ Select View.
▶ Select Map elements.
▶ In the TRAFFIC category, activate the Traffic incidents, Free-flowing traffic and Delay entries.
The display buttons are activated.

If traffic information has been received, then traffic incidents such as roadworks, road blocks, local area reports (e.g. fog) and warning messages are displayed.

The traffic delay is displayed for the current route. Traffic delays lasting one minute or longer are taken into consideration.

Showing local area messages
Multimedia system:

→ ⌂ ▸▸ Navigation ▸▸ 🛰 ▸▸ Traffic

▶ Select Area announcements.
Local area messages are shown, for example fog or heavy rain.

▶ Select a local area message.
The details are displayed.

Car-to-X-Communication

Car-to-X-Communication overview

The following requirements apply for using Car-to-X-Communication:

- The vehicle is equipped with a multimedia system featuring navigation and a communication module with an activated, integrated SIM card.
- Car-to-X-Communication is activated.

ⓘ Car-to-X-Communication is available in selected countries.

The communication module automatically establishes an Internet connection once the ignition is switched on. If there are any hazard warnings, they will be provided shortly thereafter. Depending on the mobile phone connection, the provision takes place from within a second up to about a minute.

Benefits of Car-to-X-Communication:

- Hazards are recognised automatically in the background by the vehicle or may be reported by the driver. These are then sent to vehicles with Car-to-X-Communication in the immediate vicinity.
- If available, current details relating to hazard spots near the vehicle's current position are received.

  This gives you sufficient time to adapt your driving style to the traffic conditions.

The use of Car-to-X-Communication requires the regular transmission of vehicle data to Daimler AG. The data is then immediately pseudonymised by Daimler AG. The vehicle data is deleted after an appropriate amount of time has elapsed (several weeks) and is not stored permanently.

ⓘ Data which serves as identification is replaced during the pseudonymisation process. In this way, your identity is protected against access by unauthorised third parties.

Displaying hazard warnings

Multimedia system:

↝ ⌂ » Navigation (Navigation)

If hazard warnings are available these can be shown as symbols on the map. The display depends on the settings for the Traffic and Traffic incidents options.

▶ Set the options (→ page 380).

The following displays are available:

- Show all symbols.

  The Traffic and Traffic incidents options are switched on.
- Only show symbols on the expected route.

  The Traffic option is switched off, the Traffic incidents option is switched on.
- Show no symbols.

  The Traffic incidents option is switched off.

The following hazard warnings are shown on the map:

- Broken-down vehicles
- Accidents
- Hazardous weather
- General hazards
- Hazard warning lights, when switched on
- Crosswind warning
- Mobile roadworks

  The display is not available in all countries and regions.

  In the Federal Republic of Germany the display is currently available in the Federal State of Hesse.

ⓘ If the vehicle is approaching a hazard spot with a vehicle speed of at least the voice output "Traffic incident ahead" is issued 60 km/h the voice output "Traffic incident ahead" is issued.
The voice output is not issued for hazardous weather.

Sending hazard warnings

Automatically detected hazard warnings are sent by the vehicle.

- **To send a hazard warning yourself:** tap on the media display when the map is shown. The navigation menu is shown.
- Select [ ].
- Select Report traffic incident. A prompt is shown.
- Select Yes. The Thank you for supporting accident prevention. message appears.

Route guidance with augmented reality

Overview of route guidance with augmented reality

WARNING Risk of accident and injury caused by distraction, incorrect image or interpretation of the display

The distance to other road users or information, such as traffic lights, can be incorrectly assessed from the camera image. The camera image of the augmented reality display is not suitable to be used for driving.

- Always keep your eyes on the actual traffic situation. Only glance briefly at the camera image.
- Be aware that depending on the driving situation there may be hazards that are not captured in the camera image, e.g. when turning. Avoid observing the camera image for extended periods.

During route guidance with augmented reality a camera image with the real traffic scene is shown in the media display before a turning manoeuvre.



1. Street name
2. House number
3. Change of direction arrow

Route guidance with augmented reality is not available in all countries.

Route guidance with augmented reality is currently not available on motorways.

The camera image can contain the following additional information:

- Change of direction arrow
- Street names
- House numbers

Activating route guidance with augmented reality

⚠ **WARNING** Risk of accident and injury caused by inaccurate positioning of additional information

The additional information indicated with the augmented reality display can be incorrectly positioned in the camera image. For this reason, the camera image cannot replace the need to observe the actual driving situation.

▶ Maintain the actual driving situation in view for all driving manoeuvres , e.g. when turning and when changing lanes.

Requirements:

- Route guidance is active.

Multimedia system:

↝ ⌂ ▸▸ Navigation

▶ If the detailed junction view appears during route guidance, tap on the camera symbol. The display button is activated. The camera image is shown in the media display depending on the situation.

The camera image will be shown instead of the navigation map before a turning manoeuvre and will show the additional information.

▶ **To return to the navigation map:** tap on the camera symbol again.
The display button is off.

Showing street names for route guidance with augmented reality
Requirements:

- Augmented reality is activated (→ page 383).

Multimedia system:

↝ ⌂ ▸▸ Navigation ▸▸ ⚙ ▸▸ Advanced ▸▸ Augmented Reality

▶ Activate Street names and House numbers. The display buttons are activated. During route guidance, street names and house numbers are shown as additional information in the video image.

Switching on display of traffic lights with augmented reality for route guidance
Requirements:

- Augmented reality is activated (→ page 383).
- The Traffic light zoom option is switched on.

When the vehicle is standing in first position at a junction, the camera image will show an enlarged traffic lights display.

ⓘ When the vehicle pulls away the navigation map is shown again.

Multimedia system:

→ ⌂ ›› Navigation ›› ⚙ ›› Advanced ›› Augmented Reality

- Activate Traffic light zoom.
  The display button is activated.
- Under TRAFFIC LIGHT VIEW select one of the Off, After asking or Automatic options.
  If After asking is set, the Traffic light indicator available message is shown. The camera image is shown after confirmation of the message.
  If Automatic is set, the traffic lights display is shown automatically in the camera image when available.
- **To return to the navigation map:** press the ↩ button.

Map and compass

Setting the map scale

Multimedia system:

→ ⌂ ›› Navigation

Zooming in

- When the map is shown, tap twice quickly with one finger on the media display or the touchpad.

or

- Move two fingers apart on the media display or on the touchpad.

Zooming out

- Tap with two fingers on the media display or the touchpad.

or

- Move two fingers together on the media display or on the touchpad.

ⓘ You can set the unit of measurement of the map scale (→ page 341).

Moving the map

Multimedia system:

→ ⌂ ›› Navigation



- **On the touchscreen:** move the finger in any direction when the map is shown.
- **On the touchpad:** call up the navigation menu by pressing.
- Swipe your finger up.
- Press the touchpad.
  Crosshair ① appears. The map can be moved.

▶ Touch the touchpad and move your finger in any direction.
The map moves in the opposite direction under crosshair ①.

When the map has been moved the following information appears in the status line, for example:

- Distance ② from the vehicle's current position is shown.
- Information about the current map position is shown, e.g. the name of the road.

The following functions are available:

- Select a destination on the map (→ page 359).
- Select a POI (→ page 356).
- Show traffic incidents on the map (→ page 379).

▶ **To reset the map to the current vehicle position:** select ③.

Rotating the map

▶ With two fingers, rotate anti-clockwise or clockwise on the media display or the touchpad.

Selecting the map orientation

Multimedia system:

→ ⌂ ▸▸ Navigation ▸▸ ⚙ ▸▸ Advanced

▶ Select View.

▶ Select Map orientation.

▶ Select an option.
The ● dot indicates the current setting.

The following options are available:

- 2D heading up option: the 2D map view is aligned to the direction of travel.
- 2D north up option: the 2D map view is displayed so that north is always at the top.
- 3D option: the 3D map view is aligned to the direction of travel.

or

▶ **Using quick-access:** repeatedly tap or press on the ⊘ compass symbol on the map.
The view changes in the sequence 3D, 2D heading up to 2D north up.

If the map is moved, it can switch between 3D and 2D north up.

Selecting POI symbols for the map display

Multimedia system:

→ ⌂ ▸▸ Navigation ▸▸ ⚙

POIs include restaurants and hotels, for example. These can be displayed as symbols on the map. Not all POIs are available everywhere.

Personal POIs are destinations which you have saved on a USB device, for example.

ⓘ The display of POI symbols on the map can be activated or deactivated as a favourite.

▶ **To switch on/off using quick-access:** if available, switch POI symbols on or off.
The POI symbols for the selected categories are shown on the map.

or

- **To switch on/off in the menu:** select Advanced.
- Select View.
- Select Map elements.
- Select POI symbols [>].
  The POI SYMBOLS menu is shown.
- Switch Display POIs on or off.

Selecting categories

- Select [>] in the POI SYMBOLS All categories menu.
- Switch Show all on or off.
  When the option is switched on, the POI symbols for all categories are shown on the map.

or

- Select the categories and sub-categories (if available) [>].
- Activate or deactivate the categories.
  The POI symbols for the selected categories are shown on the map.

Selecting personal POI categories

- Select [>] in the POI SYMBOLS Personal POIs menu.
- Select a category [>].
- Switch Display on the map on or off.
  When the display is switched on and the vehicle approaches a personal POI in this category, a visual and audible notification can be issued.
- **To set a notification when approaching:** select a category or a personal POI [⊙].
- Switch Visual warning and Acoustic notification on or off.

Switching display of categories for quick-access on/off

- Switch a category on or off in the POI SYMBOLS menu.

Resetting the POI symbol display

- Select POI SYMBOLS Reset POIs in the menu.
  The settings are reset to the standard settings.

Selecting the display of text information in the map

Multimedia system:

→ [⌂] ▸▸ Navigation ▸▸ [⚙] ▸▸ Advanced

- Select View.
- Select Text information.
- Select an option in the FOOTER category.
  The ● dot indicates the current setting.

The following options are available:

- Current street option

  The street you are currently on is shown in the bottom bar.

  When the map is moved, the street name, the POI name or the area name appears under the crosshair.
- The Geo-coordinates option shows the following information in the bottom bar:
  - longitude and latitude
  - elevation

    The elevation shown may deviate from the actual elevation.

- None option
  The media display shows no text information in the bottom bar.

Switching motorway information on/off
Multimedia system:
→ ⌂ ⏩ Navigation ⏩ ⚙

- **Using quick-access:** switch Motorway information on or off.
  The display button is activated or off.

or

- **Using the menu:** select Advanced.
- Select View.
- Select Text information.
- Switch Motorway information on or off.
  When the display button is switched on, additional information about the motorway facilities ahead appears during the motorway journey. These include car parks, service stations and motorway exits, for example.

Displaying the next intersecting street
Requirements:

- Route guidance is not active.

Multimedia system:
→ ⌂ ⏩ Navigation ⏩ ⚙ ⏩ Advanced

- Select View.
- Select Text information.
- Activate Next intersecting street.
  The display button is activated. If the option is switched on and the journey continues without route guidance, the name of the next intersecting street will be displayed at the upper edge of the display.

Displaying the map version
Multimedia system:
→ ⌂ ⏩ Navigation ⏩ ⚙ ⏩ Advanced

- Select View.
- Select Map version.
  The detail information is displayed.

ⓘ The online map update service from Mercedes me connect can be used to update the map data (→ page 388).

A message is shown in the media display when a new map version is available.

ⓘ Information about new versions of the digital map can be obtained from a Mercedes-Benz service centre.

Overview of avoiding an area for the route
You can define areas along a route that you would like to avoid.

Motorways or multi-lane expressways, which are routed through an area to be avoided are taken into account for the route.

Avoiding a new area for the route
Multimedia system:
→ ⌂ ⏩ Navigation ⏩ ⚙ ⏩ Advanced ⏩ Route ⏩ Avoid options ⏩ Avoid areas

- Select Avoid new area.
- **To start in the map:** select Using map.
- Move the map (→ page 384).
- **To start via destination search:** select Via address entry.

- Enter the address (→ page 353).
- Select the destination in the list or accept with OK.
  The map appears.
- **To show an area:** tap or press on the control element.
  A red rectangle appears. This designates the area that should be avoided.
- **To change the map scale:** move two fingers apart or together on the media display or on the touchpad.
  The map is zoomed in or out.
- **To set an area:** select OK.
  The Avoid area has been set. message appears. The area is entered into the list.

Changing an area to be avoided

Multimedia system:

→ ⌂ ›› Navigation ›› ⚙ ›› Advanced ›› Route ›› Avoid options ›› Avoid areas

- Select an area in the list.
- Select Edit.
- **To move an area on the map:** swipe in any direction on the control element.
- **To change the size of the area:** tap or press on the control element.
- Swipe up or down on the control element.
- Select OK.
  The Avoid area has been set. message appears. The area is entered into the list.
- **To take account of an area for the route:** select an area from the list.
- Activate Avoid area.
  The display button is activated.

  If route guidance is active, a new route is calculated.

  If there is no route yet, the setting is carried over to the next route guidance.

  The route can include an area that is to be avoided in the following cases:
  - the destination is located in an area that is to be avoided.
  - the route includes motorways or multi-lane expressways which pass through an area to be avoided.
  - there is no sensible alternative route.

Deleting an area

Multimedia system:

→ ⌂ ›› Navigation ›› ⚙ ›› Advanced ›› Route ›› Avoid options ›› Avoid areas

- **To delete an area:** select an area in the list.
- Select Delete.
- Confirm the prompt with Yes.
- **To delete all areas:** if at least two areas to avoid are set, select Delete all.
- Confirm the prompt with Yes.

Map data update overview

Updating at the Mercedes-Benz service centre

The digital maps generated by the map software become outdated in the same way as conventional road maps. Optimal route guidance can only be provided by the navigation system in conjunction with the most up-to-date map data. Information about new versions of the digital

map can be obtained from a Mercedes-Benz service centre.

You can have updates to the digital map implemented there.

ⓘ Additional costs can be incurred in this connection.

Online map update
The online map update service from Mercedes me connect can be used to update the map data.

Requirements:

- Mercedes me connect is available.
- You have a user account for the Mercedes me portal.
- The service is available.
- The service has been activated.

ⓘ The online map update service is not available in all countries.

The following options are available for the update:

- For one region (automatic map update)

  If the Automatic online updates system setting is switched off (→ page 344), you receive a message that a map update is available. You can confirm the message and download the map update.
- For several or all regions (manual map update)

  The map data will first be downloaded onto a storage medium and then updated on the multimedia system.

Further information on online map updates is available here:

- At any Mercedes-Benz service centre
- Under: https://www.mercedes.me

Further information on updates can be found at: https://manuals.daimler.com/baix/cars/connectme/en_GB/index.html.

Overview of map data
Your vehicle is supplied with map data at the factory. Depending on the country, map data for your region is either pre-installed or the map data is supplied on a data storage medium.

If the map data on your vehicle has been installed at the factory and you wish to reinstall it, you do not need to enter the activation code.

For map data that you have purchased in the form of a data storage medium, you must enter the accompanying activation code.

ⓘ If you save the map data on a data storage medium with the online map update service, no entry is required. The activation code is stored on the data storage medium during the downloading process.

Observe the following when entering the activation code:

- The activation code can be used for one vehicle
- The activation code is not transferable
- The activation code has six digits

In the event of the following problems, please contact a Mercedes-Benz service centre:

- The multimedia system does not accept the activation code
- You have lost the activation code

Displaying the compass
Multimedia system:
→ ⌂ » Navigation » 🛰 » Position

▶ Select Compass.
The compass display shows the following information:
- the current direction of travel with bearing (360° format) and compass direction
- longitude and latitude coordinates in degrees, minutes and seconds
- height (rounded)
- number of satellites from which a signal can be received

The information is not available in every country.

Displaying Qibla
Multimedia system:
→ ⌂ » Navigation » 🛰 » Position

▶ Select Qibla.
The arrow on the compass shows the direction to Mecca in relation to the current direction of travel.

The number of satellites received is shown.

ⓘ This function is not available in all countries.

Setting the map scale automatically
Multimedia system:
→ ⌂ » Navigation » ⚙ » Advanced

▶ Select View.
▶ Select Map orientation.
▶ Activate Auto zoom.
The display button is activated. The map scale is set automatically depending on your driving speed and the type of road.

ⓘ The automatically selected map scale can be changed manually. After a few seconds, this is automatically reset.

Displaying the satellite map
Multimedia system:
→ ⌂ » Navigation » ⚙ » Advanced

▶ Select View.
▶ Select Map elements.
▶ Switch Satellite map on or off.
If the display button is activated, satellite maps are displayed in map scales from 2 km.
If the display button is deactivated, satellite maps are not displayed in map scales from 2 km to 20 km.

ⓘ The satellite maps for these map scales are not available in all countries.

Displaying the range
Requirements:
- The multimedia system supports the function.

Multimedia system:
→ ⌂ » Navigation » ⚙ » Advanced

▶ Select View.
▶ Select Map elements.
▶ Activate Range.
The display button is activated.

The range is shown on the map with the following displays:
- For petrol and diesel vehicles: green display

When the lower reserve capacity is reached then the range display on the map is switched off.

ⓘ The range display on the map is not available in all countries.

Displaying weather information and other map contents
Requirements:

- Mercedes me connect is available.
- You have a user account for the Mercedes me portal.
- The service is available.
- The service has been activated.

Multimedia system:

↳ ⌂ ▸▸ Navigation ▸▸ ⚙ ▸▸ Advanced

- Select View.
- Select Map elements.
- Scroll up and show the ONLINE MAP CONTENTS category.
  The available services are displayed. The services are provided by Mercedes me connect.
- Switch on a service, e.g. Weather.
  Current weather information is displayed on the navigation map, e.g. temperature or cloud cover. The service information is not shown in all map scales, e.g. weather symbols.

Further information about available services and about displaying information in the map scales can be found in the Mercedes me Portal: https://me.secure.mercedes-benz.com

ⓘ Weather information is not available in all countries.

Showing map view in the multifunction display of the instrument cluster
Multimedia system:

↳ ⌂ ▸▸ Navigation ▸▸ ⚙ ▸▸ Advanced

- Select View.
- Select Map orientation.
- Scroll up and show the INSTRUMENT CLUSTER VIEW category.
- **To set the map scale automatically:** switch on Auto zoom.
  The display button is activated. The map scale is set automatically depending on your driving speed and the type of road.
- **To select map orientation:** select an option.
  The ● dot indicates the current selection.

  The following options are available:
  - 2D heading up option: the 2D map view is aligned to the direction of travel.
  - 2D north up option: the 2D map view is displayed so that north is always at the top.
  - 3D option: the 3D map view is aligned to the direction of travel.

Parking service

Notes on the parking service

WARNING Risk of accident and injury due to not observing the maximum permitted access height

If the vehicle height exceeds the maximum permitted access height for multi-storey car parks and underground car parks, the vehicle roof as well as other vehicle parts could be damaged.

There could be a risk of injury to the vehicle occupants.

- Before driving into a multi-storey car park or underground car park observe the locally signposted access height.
- If the vehicle height, including any additional equipment, exceeds the maximum permitted access height, do not drive into the multi-storey car park or underground car park.

This service is not available in all countries.

Selecting parking options

NOTE Before selecting the parking option

The data is based on information provided by the respective service provider.

Mercedes Benz accepts no liability for the accuracy of the information provided relating to the multi-storey car park/parking area.

- Always observe the local Information and conditions.

Requirements:

- The navigation services option is available, subscribed to and activated in the Mercedes me portal.
- The parking service is within the scope of the navigation service.
- Parking is activated (→ page 393).

Multimedia system:

→ ⌂ ›› Navigation

- Tap on [P] in the map.
- Select a parking option.
  The map shows the parking options in the vicinity.

  The following information is displayed (if available):
  - Destination address, distance from current vehicle position and arrival time
  - Information on the multi-storey car park/car park

    For example, opening times, parking charges, current occupancy, maximum parking time, **maximum access height**.

    The maximum access height shown by the parking service does not replace the need for observation of the actual circumstances.
  - Available payment options (Mercedes pay, coins, bank notes, cards)
  - Details on parking tariffs
  - Number of available parking spaces
  - Payment method (e.g. at the parking machine)
  - Services/facilities at the parking option

- Telephone number

▶ Calculate the route (→ page 361).

The following functions can also be selected (if available):

- Search for POIs in the vicinity.
- Save the destination.
- Place a call at the destination.
- Share the destination using NFC or QR code.
- Call up the web address.
- Show the destination on the map.

Displaying parking options on the map
Requirements:

- The navigation services option is available, subscribed to and activated in the Mercedes me portal.
- The parking service is within the scope of the navigation service.

Multimedia system:

↪ ⌂ » Navigation » ⚙

▶ Activate Parking.
The display button is activated. The parking options within the vicinity of the current vehicle position are shown.

Paying parking charges
Requirements:

- The navigation services option is available and activated in the Mercedes me portal.

  The parking service is within the scope of the navigation service.
- You have registered with your payment details for the payment of parking in the Mercedes me portal with Mercedes Pay and the respective contract partner.
- Parking is activated (→ page 393).

Multimedia system:

↪ ⌂ » Navigation

This option is not available in all countries.

▶ Select a parking option on the map.
▶ If a car park that can be paid for has been selected, scroll down in the parking details.
▶ Select Pay.

or

▶ Once the vehicle has reached a parking position with payment function and the ignition is switched off, a message appears.
Using this message you can pay from the vehicle and start the payment process.
▶ **To start the payment process:** confirm the message.
▶ Please note the maximum parking period displayed and any existing additional limitations. If required, a message will inform you about the necessity of displaying information confirming the online payment for the parking space.
▶ Select Start the payment process.
▶ If required, enter the personalised PIN.
▶ Press OK to confirm.
The successful start of your parking transaction is shown.
▶ Complete the booking with OK.

- **To cancel the booking:** select Cancel when you receive the confirmation message. Minimum charges may be incurred.
- **To end the booking:** stop the active transaction via the Mercedes Me app.
  You receive a summary of the procedure and the costs.

  If an active parking procedure for your vehicle is detected when you continue driving, a message appears asking if you wish to end this parking procedure.
- Confirm the message.
  When the parking procedure is stopped successfully, another message appears with the details about your completed parking procedure.

Dashcam

Notes on the dashcam

! NOTE Before using the dashcam

Before using any or all functions of the Dashcam, please read this Disclaimer carefully. If you do not accept, agree to or understand this Disclaimer, please do not use the Dashcam. By using the Dashcam, you are deemed to have accepted and agreed to the contents of this Disclaimer.

As manufacturer of the vehicle, we provide you with the device and associated software system of the Dashcam to provide you with the functionalities that we consider you may wish to have while using the Dashcam. We are unable to predict or verify whether any image(s) or geographic information captured or recorded during your use of the Dashcam is legitimate. As such, we are unable to take responsibility for any adverse consequences that may arise from the actual image(s) or geographic information captured or recorded during use of the Dashcam.

Warning: please comply with all applicable laws and regulations when you use the Dashcam. For example, please do not capture or record image(s) or geographic information which may be considered as state secret sensitive information (e.g. military areas). In case of any violations of the relevant laws and regulations, the actual user will be liable for the corresponding responsibilities and we will not take responsibility for any misuse of the Dashcam.

- Observe the country-specific regulations.

The dashcam is available in the navigation system in combination with the augmented reality function.

Selecting a USB device for a video recording with the dashcam
Requirements:

- The dashcam is available in the navigation system in combination with the augmented reality function.

- At least one USB device is connected with the multimedia system (→ page 442).

ⓘ You are legally responsible for operation and use of the dashcam functions. The legal requirements relating to operation and use of the dashcam can vary depending on the country in which the dashcam is operated. Therefore, observe the legal requirements, in particular the data protection regulations, in your country.
For this reason, before using the dashcam inform yourself about the regulation details for the respective country.

This function is not permitted in all countries. Observe the country-specific regulations.

Multimedia system:

↴ ⌂ » Mercedes me & Apps » Dashcam

▶ Select the USB device.

Starting/stopping video recording with the dashcam
Requirements:

- A USB device is connected with the multimedia system (→ page 442).
- The ignition is switched on.

ⓘ You are legally responsible for operation and use of the dashcam functions. The legal requirements relating to operation and use of the dashcam can vary depending on the country in which the dashcam is operated. Therefore, observe the legal requirements, in particular the data protection regulations, in your country.
For this reason, before using the dashcam inform yourself about the regulation details for the respective country.

This function is not permitted in all countries.

Multimedia system:

↴ ⌂ » Mercedes me & Apps » Dashcam

▶ If several USB devices are connected with the multimedia system, select the USB device (→ page 394).

▶ **To select a recording mode:** select Individual recording or Loop recording.
If Individual recording is selected and the memory is full the recording stops. An individual recording is automatically protected against being overwritten.

If Loop recording has been selected, several short video files are recorded. When the memory limit is reached, the oldest video file is deleted and recording is continued automatically.

▶ **To start:** select Start recording.
The length of the recording is shown. The Please do not remove the storage medium. message appears. The video file is stored on the USB device.

▶ **To end:** select End recording .

A report may appear in the following cases:

- For the Individual recording recording mode: the memory is full or there are only a few minutes recording time available. The video recording stops or will be stopped imminently.

  Change the USB device or delete a video file.

- If a video recording has started and a national border is detected, the National border crossed. Please observe the country-specific regulations regarding video recording. message appears.

  This function is not available in all countries.
- The camera is not functional, the Camera unavailable message appears.

  Have the camera checked in a Mercedes-Benz service centre.

Deleting a dashcam video recording
Requirements:

- A USB device with video recordings is connected with the multimedia system (→ page 442).

ⓘ You are legally responsible for operation and use of the dashcam functions. The legal requirements relating to operation and use of the dashcam can vary depending on the country in which the dashcam is operated. Therefore, observe the legal requirements, in particular the data protection regulations, in your country.

For this reason, before using the dashcam inform yourself about the regulation details for the respective country.

This function is not permitted in all countries.

Multimedia system:

→ ⌂ ›› Mercedes me & Apps ›› Dashcam

▶ Select the ▤ symbol.
The RECORDINGS menu appears.

▶ Select ⊙ for a video file.

▶ Select Delete.

▶ Select Yes.

▶ **To delete all video files:** select •••.

▶ Select Delete all entries.

Configuring dashcam settings
Requirements:

- A USB device is connected with the multimedia system (→ page 442).

ⓘ You are legally responsible for operation and use of the dashcam functions. The legal requirements relating to operation and use of the dashcam can vary depending on the country in which the dashcam is operated. Therefore, observe the legal requirements, in particular the data protection regulations, in your country.

For this reason, before using the dashcam inform yourself about the regulation details for the respective country.

This function is not permitted in all countries.

Multimedia system:

→ ⌂ ›› Mercedes me & Apps ›› Dashcam

▶ Select ⚙.

▶ **To show messages after passing a national border:** switch on National border alert.
The display button is activated.

A message appears under the following conditions:

- A video is being recorded.
- The vehicle has passed a national border.

ⓘ This function is not available in all countries.

- **To start automatic video recording:** select Automatic video recording.
- Activate Automatic video recording.
  The display button is activated. When the vehicle is started, video recording starts automatically.

ⓘ This function is not available in all countries.

Telephone

Telephony

Notes on telephony

⚠ **WARNING** Risk of distraction from operating integrated communication equipment while the vehicle is in motion

If you operate communication equipment integrated in the vehicle when driving, you will be distracted from the traffic situation. This could also cause you to lose control of the vehicle.

- Only operate this equipment when the traffic situation permits.
- If you cannot be sure of this, stop the vehicle whilst paying attention to road and traffic conditions and operate the equipment with the vehicle stationary.

⚠ **WARNING** Risk of an accident from operating mobile communication equipment while the vehicle is in motion

Mobile communications devices distract the driver from the traffic situation. This could also cause the driver to lose control of the vehicle.

- As the driver, only operate mobile communications devices when the vehicle is stationary.
- As a vehicle occupant, only use mobile communications devices in the areas intended for this purpose, e.g. in the rear passenger compartment.

You must observe the legal requirements for the country in which you are currently driving when operating mobile communication equipment in the vehicle.

⚠ **WARNING** Risk of injury due to objects being stowed incorrectly

If objects in the vehicle interior are stowed incorrectly, they can slide or be thrown around and hit vehicle occupants. In addition, cup holders, open stowage spaces and mobile phone receptacles cannot always retain all objects they contain.

There is a risk of injury, particularly in the event of sudden braking or a sudden change in direction.

- Always stow objects so that they cannot be thrown around in such situations.
- Always make sure that objects do not protrude from stowage spaces, luggage nets or stowage nets.
- Close the lockable stowage spaces before starting a journey.
- Always stow and secure heavy, hard, pointed, sharp-edged, fragile or bulky objects in the boot/load compartment.

Observe the additional information on stowing mobile communications devices correctly:

- Loading the vehicle (→ page 112)
- Stowing and securing the mobile phone (→ page 132)

Further information can be obtained from a Mercedes-Benz service centre or at: https://www.mercedes-benz-mobile.com/

Telephone menu overview

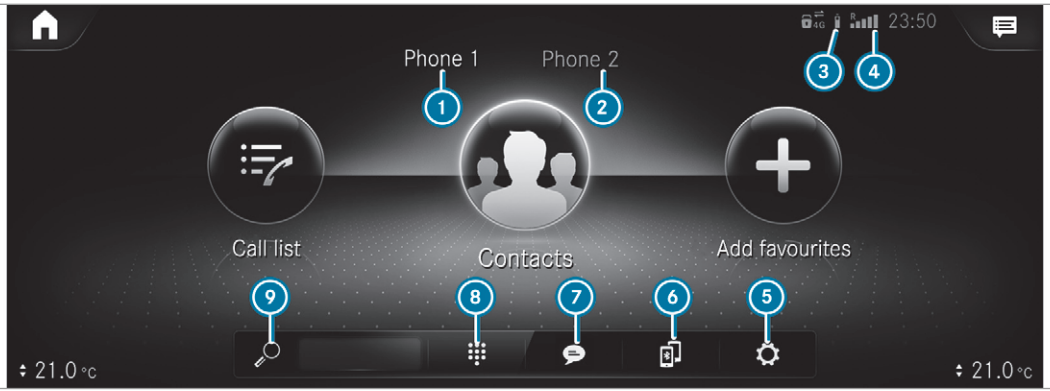

1. Bluetooth® device name of the currently connected mobile phone/of the mobile phone
2. Bluetooth® device name of the currently connected mobile phone/of the mobile phone (two phone mode)
3. Battery status of the connected mobile phone
4. Signal strength of the mobile phone network
5. Options
6. Device manager
7. Messages
8. Numerical pad
9. Contact search

Bluetooth® profile overview

Bluetooth® profile of the mobile phone	Function
PBAP (**P**hone **B**ook **A**ccess **P**rofile)	Contacts are automatically displayed in the multimedia system

Bluetooth® profile of the mobile phone	Function
MAP (**M**essage **A**ccess **P**rofile)	Message functions can be used

Telephony operating modes overview

Depending on your equipment, the following telephony operating modes are available:

- A mobile phone is connected to the multimedia system via Bluetooth® (→ page 400).
- Two mobile phones are connected with the multimedia system via Bluetooth® (two phone mode) (→ page 401).
  - You can use all the functions of the multimedia system with the mobile phone in the foreground.
  - You can receive incoming calls and messages with the mobile phone in the background.

    You can interchange the mobile phone in the foreground and background any time (→ page 401).

ⓘ Irrespective of this, Bluetooth® audio functionality can by used with any mobile phone (→ page 442).

Information on telephony

The following situations can lead to the call being disconnected while the vehicle is in motion:

- there is insufficient network coverage in the area
- you move from one transmission/reception station to another and no communication channels are free
- the SIM card used is not compatible with the network available
- a mobile phone with "Twincard" is logged into the network with the second SIM card at the same time

The multimedia system supports calls in HD Voice® for improved speech quality. A requirement for this is that the mobile phone and the mobile phone network provider of the person you are calling support HD Voice® .

Depending on the quality of the connection, the voice quality may fluctuate.

Connecting a mobile phone
Requirements:

- Bluetooth® is activated on the mobile phone (see the manufacturer's operating instructions).
- Bluetooth® is activated on the multimedia system (→ page 338).

Multimedia system:

↳ ⌂ ▸▸ Phone

Searching for a mobile phone

▶ Select [📱].

▶ Select Connect new device.

Connecting a mobile phone (authorisation using Secure Simple Pairing)

▶ Select a mobile phone.

▶ A code is displayed in the multimedia system and on the mobile phone.

▶ **If the codes match:** confirm the code on the mobile phone.

ⓘ For older mobile phone models, enter a one to sixteen-digit number code on the mobile phone and on the multimedia system for authorisation.

ⓘ Up to 15 mobile phones can be authorised on the multimedia system.
Authorised mobile phones are reconnected automatically.

ⓘ The connected mobile phone can also be used as Bluetooth® audio equipment (→ page 442).

Connecting a second mobile phone (two phone mode)
Requirements:

- At least one mobile phone is already connected to the multimedia system via Bluetooth®.

Multimedia system:

↪ ⌂ ▸▸ Phone

▶ Select ⌂.

▶ Select Connect new device.

▶ Select the mobile phone.

▶ Select Device name 1 + Device name 2.
The selected mobile phone is connected to the multimedia system.

Interchanging mobile phones (two phone mode)
Multimedia system:

↪ ⌂ ▸▸ Phone

Both mobile phones are shown individually in separate tabs.

▶ Select the tab with the desired mobile phone.
The mobile phone in the selected tab is the mobile phone in the foreground.

With the exception of telephone settings, the submenus in the telephone menu relate to the mobile phone in the foreground. In the telephone settings, settings can be made for both mobile phones.

Changing the function of a mobile phone
Requirements:

- At least one mobile phone is connected to the multimedia system via Bluetooth® (→ page 400).

Multimedia system:

↪ ⌂ ▸▸ Phone

Activating a function

▶ Select the ⌂ device manager.

▶ Select a grey symbol in the line of a mobile phone.
The corresponding function is activated.

Deactivating a function

▶ Select the ⌂ device manager.

▶ **One function is active:** select the coloured symbol in the line of a mobile phone.
The mobile phone is disconnected from the multimedia system.

▶ **Several functions are active:** select a coloured symbol in the line of a mobile phone.
The corresponding function is deactivated.

Replacing mobile phones
Multimedia system:

↪ ⌂ ▸▸ Phone

▶ Select ⌂.

- **No authorised mobile phone available:** select Connect new device.
- Select a mobile phone.
- **Newly authorised mobile phone:** confirm the number code on the mobile phone.

Using in single telephone mode

- Select Device name.
  A newly authorised mobile phone is connected in single telephone mode.

  If the mobile phone has already been authorised and connected in single telephone mode, it is connected again in single telephone mode.

  If a mobile phone has already been authorised and connected in two phone mode with another mobile phone, it will be connected in future in single telephone mode.

Using in two phone mode

- Select Device name 1 + Device name 2.
  A newly authorised mobile phone is connected with the selected mobile phone in two phone mode.

  If the mobile phone has already been authorised and connected in single telephone mode, it will be connected in future with the selected mobile phone in two phone mode.

  If the mobile phone was previously connected with another mobile phone, this connection is cancelled.

Disconnecting/de-authorising a mobile phone

Multimedia system:

→ ⌂ ▸▸ Phone

- Select [📱].
- Select [•••] in the line of the mobile phone.
- **To disconnect:** select Disconnect.
  If applicable, the mobile phone will be automatically reconnected when the vehicle is next started.
- **To de-authorise:** select Deauthorise.

Information on Near Field Communication (NFC)

NFC enables short-range wireless data transfer or (re)connection of a mobile phone with the multimedia system.

The following functions are available without having authorised a mobile phone:

- Transferring a URL or a contact to be viewed in the multimedia system (see the manufacturer's operating instructions).
- Setting up the vehicle's Wi-Fi access data via the system settings (→ page 340).

Further information can be obtained at: https://www.mercedes-benz-mobile.com/

Using the mobile phone with Near Field Communication (NFC)

Requirements:

- NFC is activated on the mobile phone (see the manufacturer's operating instructions)
- The mobile phone's screen is switched on and unlocked (see the manufacturer's operating instructions)

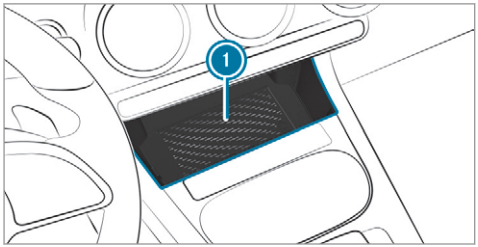

- **To connect a mobile phone:** hold the NFC area of the mobile phone (see manufacturer's operating instructions) on mat (1) or place the mobile phone on it.
- Follow the additional prompts on the media display to connect the mobile phone. Connect the mobile phone in single telephone mode (→ page 400). Connect the mobile phone in two phone mode (→ page 401).
- **To replace a mobile phone:** hold the NFC area of the mobile phone (see manufacturer's operating instructions) on mat (1) or place the mobile phone on it.
- Follow the additional prompts on the media display to replace the mobile phone in one or two phone mode (→ page 401).
- If required, confirm the prompts on your mobile phone (see the manufacturer's operating instructions).

ⓘ If your mobile phone supports wireless charging, it will be automatically charged via NFC when it is connected or replaced. A requirement for this is that the mobile phone is on the mat (→ page 132).

If you want to charge a mobile phone without connecting it to the multimedia system, lay it on the mat without beforehand unblocking the screen.

Further information can be found at: https://www.mercedes-benz-mobile.com/

Setting the reception and transmission volume

Requirements:

- A mobile phone is connected (→ page 400).

Multimedia system:

→ 🏠 ▸▸ Phone ▸▸ <device name> ▸▸ ⚙

This function ensures optimal language quality.

ⓘ Please note that the respective mobile phone must be selected for adjustment of the reception and transmission volume.

- Select Volume.
- Set the reception and transmission volume using Reception and Transmission.

Further information on the recommended reception and transmission volume: http://www.mercedes-benz.com/connect

Setting the ringtone

Multimedia system:

→ 🏠 ▸▸ Phone ▸▸ <device name> ▸▸ ⚙

- Select Ringtones.
- Set the ringtone.

ⓘ If the mobile phone supports the transfer of the ringtone, you will hear the ringtone of the mobile phone instead of that of the vehicle audio system.

Starting/stopping mobile phone voice recognition
Requirements:

- The mobile phone in the foreground is connected with the multimedia system (→ page 400).

Starting mobile phone voice recognition

▶ Press and hold the button on the multifunction steering wheel for more than one second.
You can use mobile phone voice recognition.

Stopping mobile phone voice recognition

▶ Press the or button on the multifunction steering wheel.

ⓘ If a mobile phone is connected via Smartphone Integration, the voice recognition of this mobile phone is started or stopped.

Calls

Telephone operation
Multimedia system:
→ ⌂ ⏩ Phone

Making a call by entering the numbers

▶ Select .
▶ Enter a number.
▶ Select .
The call is made.

Accepting a call

▶ Select Accept.

Rejecting a call

▶ Select Reject.

Ending a call

▶ Select .

Activating functions during a call

The following functions are available during a call:

End call
Microphone off
Numerical keypad (show to send DTMF tones)
Add call
Transfer to phone (an active call in hands-free mode is transferred over to the telephone)

▶ Select a function.

Conducting calls with several participants
Requirements:

- There is an active call (→ page 404).
- Another call is being made.

Switching between calls

▶ Select the contact.
The selected call is active. The other call is on hold.

Activating a call on hold

▶ Select the contact of the call on hold.

Conducting a conference call

▶ Select Create conferen. call.
The new participant is included in the conference call.

Ending an active call

▶ Select End call.

ⓘ On some mobile phones, the call on hold is activated as soon as the active call is ended.

Accepting/rejecting a waiting call
Requirements:

- There is an active call (→ page 404).

If you receive a call while already in a call, a message is displayed.

Depending on the mobile phone and mobile network operator you will hear a call-waiting sound.

In addition, in two phone mode you will hear an acoustic signal when the call goes through to the other (not yet active) mobile phone.

▶ Select Accept.
The incoming call is active.

If only one mobile phone is connected with the multimedia system, the previous call will be put on hold.

If during a call you accept a call with the other mobile phone when in two phone mode then the existing call is ended.

▶ Select Reject.

ⓘ This function and behaviour depends on your mobile phone network provider and the mobile phone (see the manufacturer's operating instructions).

Contacts

Information about the contacts menu
The contacts menu contains all contacts from existing data sources, e.g. mobile phone or data storage medium.

Depending on the data source, it is possible to save/load the following number of contacts:

- Permanently saved contacts: 3,000 entries
- Contacts loaded from the mobile phone: 5,000 entries per mobile phone

From the contacts menu, you can perform the following actions:

- Make a call, for example call a contact (→ page 407)
- Navigation (→ page 358)
- Compose messages (→ page 410)
- Additional options (→ page 407)

If a mobile phone is connected to the multimedia system (→ page 400) and automatic calling up (→ page 405) is activated, the mobile phone's contacts are displayed in the address book.

The multimedia system can show suggestions based on frequently used contacts as well as incoming and outgoing calls (→ page 322). These are shown at the top of the contact list.

Downloading mobile phone contacts
Multimedia system:

Phone ▸▸ <device name> ▸▸

▶ Select Contacts & call list.

Automatically

- If the Synchronise contacts automatically function is not active: activate the function by pressing once.

Manually

- If the Synchronise contacts automatically function is active: deactivate the function by pressing once.
- Select Synchronise contacts.

You can see from the status of controller to the right of the Synchronise contacts automatically display text whether the function is active.

Calling up contacts

Multimedia system:

↳ ⌂ ▸▸ Phone ▸▸ 👥

The following options can be used to search for contacts:

- searching by initials
- searching by name
- searching by phone number

- Enter characters into the search field.
- Select the contact.

A contact can contain the following details:

- phone numbers
- navigation addresses
- geo-coordinates
- Internet address
- e-mail addresses
- voice tag (if set)
- relation (if set)

Editing the format of a contact's name

Multimedia system:

↳ ⌂ ▸▸ Phone ▸▸ ⚙

- Select General.
- Select Name format.

The following options are available:

- Surname, First name
- Surname First name
- First name Surname

- Select an option.

Overview of importing contacts

Contacts from various sources

Source	Requirements:
USB device	The USB device is connected with the USB port.
Bluetooth® connection	If the sending of vCards via Bluetooth® is supported, vCards can be received on mobile phones or netbooks, for example. Bluetooth® is activated in the multimedia system and on the respective device (see the manufacturer's operating instructions).

Importing contacts into the contacts menu
Multimedia system:
→ Home ▸▸ Phone ▸▸ Settings ▸▸ General ▸▸ Import contacts

- Select a mobile phone <device name>, from which the contacts should be imported.
- Select an option.

Saving a mobile phone contact
Multimedia system:
→ Home ▸▸ Phone ▸▸ Contacts

- Select Mobile phone contacts › in the line of the mobile phone contact.
- Select •••.
- Select Save in vehicle.
- Select Yes.
  The contact saved in the multimedia system is identified by the Download symbol.

Calling a contact
Multimedia system:
→ Home ▸▸ Phone ▸▸ Contacts

- Select Search contacts.
- Enter characters into the search field.
- Select the contact.
- Select the telephone number.
  The number is dialled.

Selecting further options in the contacts menu
Multimedia system:
→ Home ▸▸ Phone ▸▸ Contacts

- Select › in the line of the contact.
- Select •••.

Depending on the stored data, the following options are available:

- Add voice tag/Delete voice tag
- Set relation/Remove relation
- Send DTMF tones (for a number with DTMF tones)

  The function is available when a call is active.

- Select an option.

Selecting options for suggestions in the contacts menu
Requirements:

- A profile has been created (→ page 317).
- The Allow contact suggestions setting is switched on (→ page 322).

Multimedia system:
→ Home ▸▸ Phone

- Select Call list.
- Select ⊙ in the line of a suggested contact.

  The following options are available:

  - Save as favourite

    The suggestions are saved as global favourites and do not appear on the home screen.
  - Do not suggest
- Select an option.

Deleting contacts
Requirements:

- The contacts are saved in the vehicle.

- To delete an individual contact, this has been imported manually into the vehicle.

Multimedia system:

→ ⌂ » Phone

Deleting all contacts

- Select ⚙.
- Select General.
- Select Delete contacts.
- Select an option.

Deleting a contact

- Select 👥.
- Select › in the line of the contact.
- Select •••.
- Select Delete contact.
- Select Yes.

Saving a contact as a favourite

Multimedia system:

→ ⌂ » Phone » ⊕ Add favourites

- Select a contact.
- Select › in the line of the contact.
- Select the telephone number.
  The contact is stored as a favourite in the telephone menu overview.

Deleting favourites in the telephone menu overview

Multimedia system:

→ ⌂

- Select a favourite in the telephone menu overview (→ page 408).
- Press and hold the favourite.
- Select Delete.
- Select Yes.

Deleting all favourites

- Tap on ⌂ in the media display.
- Select Phone.
- Select ⚙.
- Select the connected telephone.
- Select Contacts & call list.
- Select Delete all favourites.
  A pop-up window appears: Do you want to delete all favourites?
- Select Yes.

Call list

Overview of the call list

Depending on whether your mobile phone supports the PBAP Bluetooth® profile or not, this can have different effects on the presentation and functions of the call list.

If the PBAP Bluetooth® profile is supported, the effects are as follows:

- The call lists from the mobile phone are displayed in the multimedia system.
- When connecting the mobile phone, you may have to confirm the connection for the PBAP Bluetooth® profile.

If the PBAP Bluetooth® profile is not supported, the effects are as follows:

- The multimedia system generates a call list independently as soon as calls are made in the vehicle.
- The call list is not synchronised with the call lists in the mobile phone.

The multimedia system can show suggestions based on frequently used contacts as well as incoming and outgoing calls (→ page 322). These are shown at the top of the call list.

Making a call from the call list
Multimedia system:

→ Home ▸▸ Phone

▶ Select Call list.

▶ Select an entry.
The call is made.

Calling up additional options in the call list
Multimedia system:

→ Home ▸▸ Phone

▶ Select Call list.

▶ For previously stored contacts: select ❯ in the line of an entry.
The search results are displayed.

▶ For contacts who have not been stored: select ⬬.

Selecting options for suggestions in the call list
Requirements:

- A profile has been created (→ page 317).
- The Allow contact suggestions setting is switched on (→ page 322).

Multimedia system:

→ Home ▸▸ Phone

▶ Select Call list.

▶ Select ⊙ in the line of a suggested entry.
The following options are available:

- Save as favourite
- Do not suggest

▶ Select an option.

Deleting the call list
Multimedia system:

→ Home ▸▸ Phone ▸▸ <device name> ▸▸ ⚙

▶ Select Contacts & call list.

▶ Select Delete call list.

▶ Select Yes.

ⓘ This function is only available if your mobile does not support the PBAP Bluetooth® profile.

Text messages

Overview of message functions
In the messages menu you can receive and send text messages.

If the connected mobile phone supports the Bluetooth® MAP profile, the message function can be used on the multimedia system.

You can obtain further information about settings and supported functions of Bluetooth®-capable mobile phones from a Mercedes-Benz

service centre or at: https://www.mercedes-benz-mobile.com/

Some mobile phones require further settings after being connected to the multimedia system (see manufacturer's operating instructions).

Setting message displays

Multimedia system:

Phone ▸▸ <device name> ▸▸

- Select Message display.

  The following options are available:
  - All messages
  - New and unread messages
  - Messages while the vehicle is in motion
  - Off (the message function is no longer available.)
- Select a setting.

Reading messages

Multimedia system:

Phone ▸▸ <device name> ▸▸

Using the read-aloud function

- Select a contact.
- Select to read aloud.

  The message is read aloud.

Dictating and sending a new message

Requirements:

- There is an Internet connection.

Multimedia system:

Phone ▸▸ <device name> ▸▸

- Select a new message using .

Adding a recipient

- Select ⊕.
- Select a contact.

Dictating text

- Select .

  The dictating function is started.
- Say the message.

  After the voice message has been processed, it is shown as text.

Sending a message

- Select Send.

ⓘ When the vehicle is stationary you can use the keyboard to write a message. No Internet connection is required to use the keyboard.

Replying to a message in the messaging history

Multimedia system:

Phone ▸▸ <device name> ▸▸

A message list is shown.

- Select next to a contact.

  The messaging history with this contact is shown.

- Select [ ].
  The dictating function is started.
- Say the message.
  After the voice message has been processed, it is shown as text.
- Select Send.

Using message templates
Multimedia system:
[ ] ▸▸ Phone ▸▸ <device name> ▸▸ [ ]

Using a template as a new message
- Select [ ] to write a new message.
- Add a recipient using ⊕.
- Select a [ ] template.

Answering a message with a template
- Select a message sequence with a contact.
- Select a [ ] template.
- Select a [ ] template.

Forwarding a message
Multimedia system:
[ ] ▸▸ Phone ▸▸ <device name> ▸▸ [ ]

A message list is shown.
- Select [ ] next to a contact.
  The messaging history with this contact is shown.
- Press and hold on a message.
- **To forward a message:** select Forward.

Calling a message sender
Multimedia system:
[ ] ▸▸ Phone ▸▸ <device name> ▸▸ [ ]

A message list is shown.
- Select [ ] next to a contact.
  The messaging history with this contact is shown.
- Select [ ].
- Select Call.

Using telephone numbers or URLs from a text message
Requirements:
- An Internet connection is available to call up a URL.

Multimedia system:
[ ] ▸▸ Phone ▸▸ <device name> ▸▸ [ ]

A message list is shown.
- Select [ ] next to a contact.
  The messaging history with this contact is shown.
- Select a telephone number or a URL in the message.
  If a URL is selected the web browser opens.
  If a telephone number is selected the following options are available:
  - Call
  - New message
- Select an option.

Deleting a message
Multimedia system:
→ ⌂ » Phone » <device name>
» 💬
- Select a contact.
- Press and hold on a message.
- **To delete the message:** select Delete.

In-Car Office

In-Car Office functions
Using In-Car Office, you can connect your online services with the multimedia system.

The following functions are available:

- Display of the upcoming appointments in the calendar.
- Start navigation to an appointment. It is a requirement that the appointment contains a navigable destination for the location.
- Display the appointment.
- Display and selection of tasks and calls to complete.

ⓘ Please note that certain functions are only available when the vehicle is stationary.

Calling up In-Car Office
Requirements:

- A mobile phone is connected as the main phone to the multimedia system.
- You have a user account in the Mercedes me portal: https://me.secure.mercedes-benz.com
- The In-Car Office service is activated in the Mercedes me portal.
- You have a user account with an online service, e.g. with Office 365, and have connected this with In-Car Office via the Mercedes me portal.

Multimedia system:
→ ⌂ » Mercedes me & Apps
- Select In-Car Office.
  You will see an appointments overview for the current day.

You can find the following displays in the appointments overview:

- All-day appointments: All day
- Appointments with a limited duration, e.g. four-hour appointment with starting and completion time details.

Selecting a calendar entry function in In-Car Office
Multimedia system:
→ ⌂ » Mercedes me & Apps
» In-Car Office » Calendar
- Select an appointment.
  The following functions are available:

  🔊 Read aloud
  📞 Call
  ➤ Navigate
  🗑 Delete
- Select a function.

ⓘ Some functions are only available when additional information about the appointment is entered. Functions which are not available are not shown.
The Call function is only available if a number for the appointment has been saved.
The Navigate function is only available, if a navigable location for the appointment has been saved in the associated online account.

Selecting the functions of Tasks & Calls
Multimedia system:
↝ ⌂ ⏩ Mercedes me & Apps ⏩ In-Car Office ⏩ Tasks & calls

- ▶ Select an entry.
  The following functions are available:
  - Read aloud
  - Call
    This option is only available for tasks if a telephone number has been saved.
  - Delete
- ▶ Select an option.

Marking an entry as completed in Tasks & Calls
Multimedia system:
↝ ⌂ ⏩ Mercedes me & Apps ⏩ In-Car Office ⏩ Tasks & calls

- ▶ Select the Tasks & calls symbol.
  An overview of the tasks and calls appears.
- ▶ **Individual task or call:** mark the selected entry as completed ☑.

Noting an incoming call
When you receive an incoming call a prompt appears asking whether the call should be accepted, rejected or noted.

- ▶ Select Reminder.
  The call is declined and added to the In-Car Office Tasks & calls automatically.

Managing e-mails
Multimedia system:
↝ ⌂ ⏩ Mercedes me & Apps ⏩ In-Car Office ⏩ E-mail

Showing/reading e-mail

- ▶ Select an e-mail.
  The e-mail is opened.

Additional functions are available:

- Creating e-mail.(→ page 413)
- Answering e-mail (→ page 414)
- Forwarding e-mail(→ page 414)

Writing new e-mail
Requirements:

- A mobile phone with e-mail contacts is already connected to the multimedia system via Bluetooth®.

Multimedia system:

→ ⌂ ⏩ Mercedes me & Apps ⏩ In-Car Office ⏩ E-mail

Using the keyboard

- ▶ Select [+].
- ▶ Add recipients using ⊕.
- ▶ Enter the subject and text of the e-mail in the corresponding fields with the keypad.
- ▶ Select Send.

Using the dictation function

ⓘ The dictation function is not available everywhere nor without limitation. For initial activation of the function it may be necessary to select the terms of use in the Mercedes me portal.

- ▶ Select [🎤].
  The dictating function is started.
- ▶ Dictate the subject and text of the e-mail.
  After the voice entry has been processed, it is shown as text.
- ▶ Select Send.

Using voice control

- ▶ Use the LINGUATRONIC Write an e-mail voice command.
  You are guided by the dialogue.

ⓘ Additional information on operation of LINGUATRONIC (→ page 283).

Answering e-mail
Requirements:

- A mobile phone with e-mail contacts is connected to the multimedia system via Bluetooth®.

Multimedia system:

→ ⌂ ⏩ Mercedes me & Apps ⏩ In-Car Office ⏩ E-mail

Using the keyboard

- ▶ Select an e-mail.
- ▶ Select Reply.
- ▶ Enter the e-mail text in the corresponding field.
- ▶ Select Send.

Using the dictation function

ⓘ The dictation function is not available everywhere nor without limitation. For initial activation of the function it may be necessary to select the terms of use in the Mercedes me portal.

- ▶ Select an e-mail.
- ▶ Select Reply.
- ▶ Select [🎤].
  The dictating function is started.
- ▶ Dictate the text of the e-mail.
  After the voice entry has been processed, it is shown as text.
- ▶ Select Send.

Using voice control

- ▶ Use the LINGUATRONIC Answer e-mail voice command.
  You are guided by the dialogue.

ⓘ Additional information on operation of LINGUATRONIC (→ page 283).

Forwarding e-mail
Requirements:

- A mobile phone with e-mail contacts is connected to the multimedia system via Bluetooth®.

Multimedia system:

→ ⌂ ⏩ Mercedes me & Apps ⏩ In-Car Office ⏩ E-mail

Using the keyboard

- Select an e-mail.
- Select Forward.
- **To forward with attachment:** select Forward with attachment.
- **To forward without attachment:** select Forward without attachment.
- Enter the e-mail text in the corresponding field using the keypad.
- Select Send.

Mercedes-Benz link

Overview of Mercedes-Benz Link

⚠ **WARNING** Risk of distraction from information systems and communications equipment

If you operate information and communication equipment integrated in the vehicle when driving, you will be distracted from the traffic situation. This could also cause you to lose control of the vehicle.

- Only operate this equipment when the traffic situation permits.
- If you cannot be sure of this, stop the vehicle whilst paying attention to road and traffic conditions and operate the equipment with the vehicle stationary.

You must observe the legal requirements for the country in which you are currently driving when operating the multimedia system.
With Mercedes-Benz Link you can use mobile phone functions via the multimedia system. It is operated using the touchscreen or the voice-operated control system. You can activate the voice-operated control system by pressing and holding the button on the multifunction steering wheel.

When using Mercedes-Benz Link via the voice-operated control system, the multimedia system can still be operated via LINGUATRONIC (→ page 283).

The Mercedes-Benz Link control box supplementary equipment is required for this. This is available at a Mercedes-Benz service centre.

Only one mobile phone at a time can be connected via Mercedes-Benz Link to the multimedia system.

When a mobile phone is connected with Mercedes-Benz Link, only one additional mobile phone can be connected using Bluetooth® with the multimedia system when in two phone mode.

ⓘ The Mercedes-Benz Link control box uses the Android operating system.

ⓘ The service provider is responsible for these apps and the services and content connected to it.

Notes on Mercedes-Benz Link
If a mobile phone is used with Mercedes-Benz Link, USB access using the media menu is possible for this mobile phone.

ⓘ Only one route guidance can be active at a time. If route guidance is active on the multimedia system, it is closed when route guidance is started on the mobile phone.

Connecting Mercedes-Benz Link with the multimedia system
Requirements:

- The vehicle is fitted with the Mercedes-Benz Link control box.
- The Mercedes-Benz Link app is installed on the mobile phone.
- The mobile phone is switched on.
- Mercedes-Benz Link is connected to the multimedia system via the USB port using a suitable cable (→ page 442).

ⓘ The first activation of Mercedes-Benz Link on the multimedia system must be carried out when the vehicle is stationary for safety reasons.

Multimedia system:
→ Mercedes me & Apps ▸▸ Smartphone ▸▸ Mercedes-Benz Link ▸▸ Start Mercedes-Benz Link

Accepting/rejecting the data protection regulations
For the initial start of the application: a message with the data protection provisions appears.

▶ Select Accept & start.

Quitting Mercedes-Benz Link

▶ Press the button.

ⓘ Mercedes-Benz Link starts automatically when it is connected with the system using a cable. If Mercedes-Benz Link was not displayed in the foreground before disconnecting, the application starts in the background when reconnected. You can call up Mercedes-Benz Link using the main menu.

You can find more information in the Mercedes-Benz Link control box operating instructions.

Calling up Mercedes-Benz Link sound settings
Multimedia system:
→ Mercedes me & Apps ▸▸ Smartphone ▸▸ Mercedes-Benz Link ▸▸

▶ Select sound settings.

Ending Mercedes-Benz Link

▶ Disconnect the connecting cable between Mercedes-Benz Link and the multimedia system.

ⓘ Mercedes-Benz recommends disconnecting the connecting cable only when the vehicle is stationary.

Apple CarPlay®

Overview of Apple CarPlay®

WARNING Risk of distraction from information systems and communications equipment

If you operate information and communication equipment integrated in the vehicle when driving, you will be distracted from the traffic situation. This could also cause you to lose control of the vehicle.

- Only operate this equipment when the traffic situation permits.
- If you cannot be sure of this, stop the vehicle whilst paying attention to road and traffic conditions and operate the equipment with the vehicle stationary.

You must observe the legal requirements for the country in which you are currently driving when operating the multimedia system.

iPhone® functions can be used via the multimedia system using Apple CarPlay®. They are operated using the touchscreen, touchpad, Touch Control or the Siri® voice-operated control system. You can activate the voice-operated control system by pressing and holding the button on the multifunction steering wheel.

When using Apple CarPlay® via the voice-operated control system, the multimedia system can still be operated via LINGUATRONIC (→ page 283).

Only one iPhone® at a time can be connected via Apple CarPlay® with the multimedia system.

Also for use of Apple CarPlay® with two phone mode, only one additional mobile phone can be connected using Bluetooth® with the multimedia system.

The availability of Apple CarPlay® may vary according to the country.

The service provider is responsible for this application and the services and content connected to it.

Apple CarPlay® is a registered trademark of Apple Inc.

Information on Apple CarPlay®

When Apple CarPlay® is being used, the iPod® media source is not available for the respective iPhone®.

Only one route guidance can be active at a time. If route guidance is active on the multimedia system, it is closed when route guidance is started on the mobile phone.

Connecting an iPhone® via Apple CarPlay® (cable)

Requirements:

- The current version of your device's operating system is being used (see the manufacturer's operating instructions).
- There is an Internet connection for the full range of functions for Apple CarPlay®.
- The iPhone® is connected to the multimedia system via the USB port using a suitable cable (→ page 442).

Multimedia system:

→ ⌂ ▸▸ Mercedes me & Apps ▸▸ Smartphone ▸▸ Apple CarPlay ▸▸ Start Apple CarPlay

▶ Alternative: If an Apple CarPlay® application is active (e.g. when music is being played or route guidance is active), you can call up the active application using the RADIO MEDIA, NAVI MAP or TEL application buttons (→ page 315).

ⓘ Control using the application buttons can be switched on or off (→ page 418).

Accepting/rejecting the data protection regulations

For the initial start of the application: a message with the data protection provisions appears.

▶ Select Accept & start.

Exiting Apple CarPlay®

▶ Press the ⌂ button.

ⓘ Apple CarPlay® starts automatically when the iPhone® is connected with the system using a cable. If Apple CarPlay® was not displayed in the foreground before disconnecting, the application starts in the background when reconnected. You can call up Apple CarPlay® in the main menu.

Calling up Apple CarPlay® tone settings

Multimedia system:

→ ⌂ ▸▸ Mercedes me & Apps ▸▸ Smartphone ▸▸ Apple CarPlay ▸▸ ⚙

▶ Select sound settings.

Setting control of the application buttons (Apple CarPlay®)

Multimedia system:

→ ⌂ ▸▸ Mercedes me & Apps ▸▸ Smartphone ▸▸ Apple CarPlay ▸▸ ⚙ ▸▸ General

▶ To switch on Control via application buttons: activate the display button.

▶ To switch off Control via application buttons: deactivate the display button.

Ending Apple CarPlay®

▶ **To end the connection of Apple CarPlay®(with cable):** disconnect the connection via the connecting cable between the mobile phone and multimedia system.

ⓘ Mercedes-Benz recommends disconnecting the connecting cable only when the vehicle is stationary.

Android Auto

Android Auto overview

⚠ WARNING Risk of distraction from information systems and communications equipment

If you operate information and communication equipment integrated in the vehicle when driving, you will be distracted from the traffic situation. This could also cause you to lose control of the vehicle.

▶ Only operate this equipment when the traffic situation permits.

▶ If you cannot be sure of this, stop the vehicle whilst paying attention to road and traffic conditions and operate the equipment with the vehicle stationary.

You must observe the legal requirements for the country in which you are currently driving when operating the multimedia system.
Mobile phone functions can be used with Android Auto using the Android operating system on the multimedia system. It is operated using the touchscreen or the voice-operated control system. You can activate the voice-operated control system by pressing and holding the button on the multifunction steering wheel.

When using Android Auto via the voice-operated control system, the multimedia system can still be operated via LINGUATRONIC (→ page 283).

Only one mobile phone at a time can be connected via Android Auto with the multimedia system.

Also for use of Android Auto with two phone mode, only one additional mobile phone can be connected using Bluetooth® with the multimedia system.

The availability of Android Auto and Android Auto apps may vary according to the country.

The service provider is responsible for this application and the services and content connected to it.

Information on Android Auto
If a mobile phone is used with Android Auto, USB access using the media menu is not possible for this mobile phone.

Only one route guidance can be active at a time. If route guidance is active on the multimedia system, it is closed when route guidance is started on the mobile phone.

Connecting a mobile phone via Android Auto (wired)
Requirements:

- The mobile phone supports Android Auto from Android 5.0.
- The Android Auto app is installed on the mobile phone.
- In order to use the telephone functions, the mobile phone must be connected to the multimedia system via Bluetooth® (→ page 400).

If there was no prior Internet connection, this is established with the use of the mobile phone with Android Auto.

- The mobile phone is connected to the multimedia system via the USB port using a suitable cable (→ page 442).
- There is an Internet connection for the full range of functions for Android Auto.

Multimedia system:
→ ⌂ ▸▸ Mercedes me & Apps ▸▸ Smartphone ▸▸ Android Auto ▸▸ Start Android Auto

▶ Alternative: If an Android Auto application is active (e.g. when music is being played or route guidance is active), you can call up the active application using the RADIO MEDIA, NAVI MAP or TEL application buttons (→ page 315).

ⓘ Control using the application buttons can be switched on or off (→ page 420).

ⓘ The first activation of Android Auto on the multimedia system must be carried out when the vehicle is stationary for safety reasons.

Accepting/rejecting the data protection regulations

For the initial start of the application: a message with the data protection provisions appears.

▶ Select Accept & start.

Exiting Android Auto

▶ Press the ⌂ button.

ⓘ Android Auto starts automatically when the mobile phone is connected with the system using a cable. If Android Auto was not displayed in the foreground before disconnecting, the application starts in the background when reconnected. You can call up Android Auto in the main menu.

Calling up the Android Auto sound settings

Multimedia system:

↝ ⌂ ⏩ Mercedes me & Apps ⏩ Smartphone ⏩ Android Auto ⏩ ⚙

▶ Select sound settings.

Setting control of the application buttons (Android Auto)

Multimedia system:

↝ ⌂ ⏩ Mercedes me & Apps ⏩ Smartphone ⏩ Android Auto ⏩ ⚙ ⏩ General

▶ To switch on Control via application buttons: activate the display button.

▶ To switch off Control via application buttons: deactivate the display button.

Ending Android Auto

▶ **To end the connection of Android Auto (with cable):** disconnect the connection via the connecting cable between the mobile phone and multimedia system.

ⓘ Mercedes-Benz recommends disconnecting the connecting cable only when the vehicle is stationary.

Transferred vehicle data with Android Auto and Apple CarPlay®

Overview of transferred vehicle data

When using Android Auto or Apple CarPlay®, certain vehicle data is transferred to the mobile phone. This enables you to get the best out of selected mobile phone services. Vehicle data is not directly accessible.

The following system information is transmitted:

- Software release of the multimedia system
- System ID (anonymised)

The transfer of this data is used to optimise communication between the vehicle and the mobile phone.

To do this, and to assign several vehicles to the mobile phone, a vehicle identifier is randomly generated.

This has no connection to the vehicle identification number (VIN) and is deleted when the multimedia system is reset (→ page 345).

The following driving status data is transmitted:

- Transmission position engaged

- Distinction between parked, standstill, rolling and driving
- Day/night mode of the instrument cluster

The transfer of this data is used to alter how content is displayed to correspond to the driving situation.

The following position data is transmitted:

- Coordinates
- Speed
- Compass direction
- Acceleration direction

This data is only transferred while the navigation system is active, in order to improve it (e.g. so it can continue functioning when in a tunnel).

Mercedes me calls

Making a call via the overhead control panel

ⓘ Mercedes me calls are not possible in every country. Find out at a Mercedes-Benz service centre if these functions are available in your country.

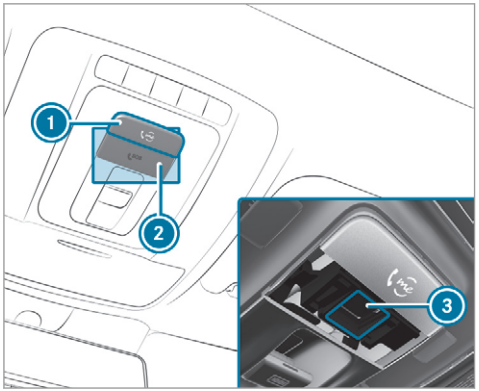

1 me button for service, concierge or information calls
2 SOS button cover
3 SOS button (emergency call system)

▶ **To make a Mercedes me call:** press me button 1.

▶ **To make an emergency call:** press SOS button cover 2 briefly to open.

▶ Press and hold SOS button 3 for at least one second.

If a Mercedes me call is active, an emergency call can still be triggered. This has priority over all other active calls.

Information about the Mercedes me call using the me button

A call to the Mercedes-Benz Customer Centre has been initiated via the me button in the overhead control panel or the multimedia system (→ page 421).

Using the voice dialogue system you access the desired service:

- Concierge Service (if the service is activated)
- Accident and breakdown management (→ page 424)
- Mercedes-Benz Customer Centre for general information about the vehicle

You can find information on the following topics:

- Activation of Mercedes me connect
- Operating the vehicle
- Nearest Mercedes-Benz service centre

- Other products and services from Mercedes-Benz

Data is transferred during the connection to the Mercedes-Benz Customer Centre (→ page 423).

Calling the Mercedes-Benz Customer Centre using the multimedia system
Requirements:

- Access to a GSM network is available.
- The contract partner's GSM network coverage is available in the respective region.
- The ignition must be switched on so that vehicle data can be transferred automatically.

Multimedia system:

→ ⌂ » Phone » 👥

▶ Call Mercedes me connect.
After confirmation, the multimedia system sends the required vehicle data. The data transfer is shown in the media display.

Then, you can select a service and be connected to a specialist at the Mercedes-Benz Customer Centre.

Further information on Mercedes me connect, the provided service scope and operation are available at: http://manuals.daimler.com/baix/cars/connectme/en_GB/index.html

Arranging a service appointment via a Mercedes me call
If you have activated the maintenance management service, relevant vehicle data is transferred automatically to the Mercedes-Benz Customer Centre. You will then receive individual recommendations regarding the maintenance of your vehicle.

Regardless of whether you have consented to the maintenance management service, the multimedia system reminds you after a certain amount of time that a service is due. A prompt appears asking if you would like to make an appointment.

▶ **To arrange a service appointment:** select Call.
After your agreement the vehicle data is sent and a Mercedes-Benz Customer Centre employee deals with your appointment. The information is then sent to your desired service outlet.
This will contact you to confirm the appointment and if necessary consult about the details.

ⓘ If you select Later after the service message appears, the message is hidden and reappears after a certain period of time.

Giving consent to data transfer during a Mercedes me call
Requirements:

- There is an active Mercedes me call via the multimedia system or the me button in the overhead control panel .

ⓘ The prompt to confirm data transfer does not appear in all countries.

If the accident and breakdown service and Mercedes me connect Concierge Service are not activated on Mercedes me, the Do you want to transmit vehicle data and the vehicle's position to the Mercedes-Benz Customer Centre in order to improve the processing of your request? message appears.

▶ Select Yes.
Relevant identification data is transmitted automatically.

More information on Mercedes me: http://www.mercedes.me

Transferred data during a Mercedes me call
The data transferred during a Mercedes me call depends on which service is selected in the voice control system and whether Mercedes me connect services are activated.

If no Mercedes me connect services are activated and the data protection prompt has been confirmed the following data is transmitted:

- Vehicle identification number
- Mercedes me customer identification number
- Reason for the initiation of the call
- Language set in the multimedia system
- Confirmation of the data protection prompt

If a call is made for a service appointment via the service reminder, the following data may be transmitted:

- Current mileage and maintenance data

  Transfer is possible assuming the required data transfer technology is supported by the mobile service operator and the quality of the mobile connection is sufficient.

If Accident and Breakdown Management is called via the voice control system and no service has been activated, but the data protection query has been confirmed, the following data can also be called up from the vehicle by the Mercedes-Benz Customer Centre:

- Current vehicle location

ⓘ At the time of going to press, this function is technically not yet available but can be supported in the future.

If the data protection prompt has been rejected the following data is transmitted:

- Reason for the initiation of the call
- Rejection of the data protection prompt

Mercedes me connect

Notes on Mercedes me connect

ⓘ Mercedes me connect is not available in every country. Find out at a Mercedes-Benz service centre if these functions are available in your country.

Mercedes me connect consists of multiple services.

Depending on whether the services are activated and on the vehicle equipment, you can use the following services via the multimedia system and the overhead control panel, for example:

- Accident and breakdown management (me button)
- If the service is activated: Concierge Service (me button)
- Mercedes-Benz emergency call system (automatic emergency call or SOS button)

Mercedes me connect accident and breakdown management, the Mercedes me connect Concierge Service (if service is activated) and the Mercedes-Benz emergency call centre are available for you around the clock.

The me button and the SOS button can be found on the vehicle's overhead control panel (→ page 421).

You can also call the Mercedes-Benz Customer Centre using the multimedia system (→ page 422).

Please note that Mercedes me connect is a Mercedes-Benz service. In emergencies, always call the national emergency services first using the standard national emergency service phone numbers. In emergencies, you can also use the Mercedes-Benz emergency call system (→ page 426).

Observe the conditions of use for Mercedes me connect and other services. These can be obtained in the Mercedes me portal: https://me.secure.mercedes-benz.com

Further information on Mercedes me connect, the provided service scope and operation: http://manuals.daimler.com/baix/cars/connectme/en_GB/index.html

Information on Mercedes me connect accident and breakdown management

The accident and breakdown management can include the following functions:

- Supplement to the Mercedes-Benz emergency call system (→ page 426)

  If necessary, the contact person at the Mercedes-Benz emergency call centre forwards the call to Mercedes me connect breakdown and accident management. Forwarding the call is however not possible in all countries.
- Breakdown assistance by a mechanic on location and/or the towing away of the vehicle to the nearest Mercedes-Benz service centre

  You may be charged for these services.

More information about Mercedes me connect services can be obtained in the Mercedes me portal: https://me.secure.mercedes-benz.com

Data transferred during Mercedes me connect call services

The data transferred during a Mercedes me connect call depends on the reason the call was initiated, which service is selected in the voice control system and which Mercedes me connect services are activated.

Which data is transferred for the services can be taken from the currently valid terms of use. These can be obtained in the Mercedes me portal: https://me.secure.mercedes-benz.com

Mercedes me and apps

Information about Mercedes me

When you log in with a user account to the Mercedes me portal, then services and offers from Mercedes-Benz will be available to you.

Availability is country-dependent.

For more information consult a Mercedes-Benz service centre or visit the Mercedes me portal: http://me.secure.mercedes-benz.com

ⓘ Make sure you always keep the Mercedes me apps updated.

Calling up the Mercedes me user account
Multimedia system:
→ ⌂ ⏩ Mercedes me & Apps

Your vehicle is connected with a user account

- Select Mercedes me.
  Information about the connected user account appears.

Your vehicle is not yet connected with a user account

- Select Mercedes me.
- The instructions for creating a user account and connecting the vehicle with this follow on the media display.

ⓘ If the Mercedes me app is available on a mobile phone, the vehicle connection can be accomplished using the QR code shown.

Calling up the Mercedes me services
Requirements:

- The vehicle is connected with the user account.

Multimedia system:
→ ⌂ ⏩ Mercedes me & Apps

- Select Services.
  Within the various categories you can see the Mercedes me services you have already purchased and also those still available to purchase.
  To activate or deactivate the services, log in to your user account in the Mercedes me portal.

Deleting a connection between a user account and the vehicle
Requirements:

- The (vehicle) profile of the user account that was first connected with the vehicle is selected.
- The profile is synchronised (→ page 318).
- A PIN has been set.

Multimedia system:
→ ⌂ ⏩ Mercedes me & Apps
⏩ Mercedes me

- Select Delete vehicle assignment.
- Enter the PIN of the connected user account.

ⓘ Only the user, whose user account was first connected with the vehicle can delete the connection between all user accounts and the vehicle.

Mercedes-Benz emergency call system

Information on the Mercedes-Benz emergency call system
The Mercedes-Benz emergency call system only functions in areas where mobile phone coverage is available from the relevant contract partner. Insufficient network coverage from the relevant contract partner may result in an emergency call not being transmitted.

The ignition must be switched on before an automatic emergency call can be made.

ⓘ The Mercedes-Benz emergency call system is activated at the factory. Using the Mercedes-Benz emergency call system is free of charge.

Overview of the Mercedes-Benz emergency call system

The Mercedes-Benz emergency call system can help to decisively reduce the time between an accident and the arrival of emergency services at the site of the accident. It helps locate an accident site in places that are difficult to access.

The emergency call can be made automatically (→ page 426) or manually (→ page 427). Only make emergency calls if you or others are in need of rescue. Do not make an emergency call in the event of a breakdown or a similar situation.

You can find more information on the regional availability of the Mercedes-Benz emergency call system at: https://www.mercedes-benz-mobile.com/extra/ecall/

Message in the media display:

The following messages appear in the media display:

- SOS NOT READY: the ignition is not on or there is a malfunction with the emergency call system (→ page 304). This does not necessarily indicate complete failure of the emergency call system. Emergency calls call still be transmitted.

  The display only refers to the vehicle and does not take account of the availability of mobile phone networks and the Mercedes-Benz emergency call centre.

  The functional readiness of the emergency call system on the vehicle can be seen when the SOS NOT READY display disappears once the ignition is switched on.
- SOS: The icon appears in the display during an active emergency call.

ⓘ If there is a malfunction in the Mercedes-Benz emergency call system (e.g. a fault with the speaker, microphone, airbag, SOS button), a corresponding message appears in the multifunction display of the instrument cluster.

Triggering an automatic Mercedes-Benz emergency call

Requirements:

- The ignition is switched on.
- The starter battery is sufficiently charged.

The Mercedes-Benz emergency call system triggers an emergency call automatically in the following cases:

- After activation of the restraint systems such as airbags or seat belt tensioners after an accident.
- After an automatically initiated emergency stop by Active Emergency Stop Assist.

The emergency call has been made:

- A voice connection is made to the Mercedes-Benz emergency call centre.
- A message with accident data is transmitted to the Mercedes-Benz emergency call centre.

  The Mercedes-Benz emergency call centre can transmit the vehicle position data to one of the public emergency services call centres.
- Under certain circumstances data is also transmitted in the voice channel to the Mercedes-Benz emergency call centre.

This allows measures for rescue, recovery or towing to a Mercedes-Benz Service Centre to be initiated quickly.

The SOS button in the overhead control panel flashes until the emergency call is finished.

It is not possible to immediately end an automatic emergency call.

If the Mercedes-Benz emergency call system cannot connect to the Mercedes-Benz emergency call centre, the emergency call is automatically sent to the public emergency services call centre.

If no connection can be made to the public emergency services, a corresponding message appears in the display.

▶ Dial the emergency number **112** on your mobile phone.

If an emergency call has been initiated:

- Remain in the vehicle if the road and traffic conditions permit you to do so until a voice connection is established with the emergency call centre operator.
- Based on the call, the operator decides whether it is necessary to call rescue teams and/or the police to the accident site.
- If no vehicle occupant answers, an ambulance is sent to the vehicle immediately.

Triggering a manual Mercedes-Benz emergency call

▶ **To use the SOS button in the overhead control panel:** press the SOS button at least one second long .

▶ **To use voice control:** use the LINGUATRONIC voice commands (→ page 292).

The emergency call has been made:

- A voice connection is made to the Mercedes-Benz emergency call centre.
- A message with accident data is transmitted to the Mercedes-Benz emergency call centre.

  The Mercedes-Benz emergency call centre can transmit the vehicle position data to one of the public emergency services call centres.
- Under certain circumstances data is also transmitted in the voice channel to the Mercedes-Benz emergency call centre.

  This allows measures for rescue, recovery or towing to a Mercedes-Benz Service Centre to be initiated quickly.
- Remain in the vehicle if the road and traffic conditions permit you to do so until a voice connection is established with the emergency call centre service provider.
- On the basis of the call, the service provider decides whether it is necessary to call rescue teams and/or the police to the accident site.

If the Mercedes-Benz emergency call system cannot connect to the Mercedes-Benz emergency call centre, the emergency call is automatically sent to the public emergency services call centre.

If no connection can be made to the public emergency services, a corresponding message appears in the media display.

▶ Dial the emergency number **112** on your mobile phone.

Ending an unintentionally triggered manual Mercedes-Benz emergency call

▶ **On the multifunction steering wheel:** select [☎].

Data transfer of the Mercedes-Benz emergency call system

In the event of an automatic or manual emergency call the following data is transmitted, for example:

- Vehicle's GPS position data
- GPS position data on the route (a few hundred metres before the incident)
- Direction of travel
- Vehicle identification number
- Vehicle drive type
- Number of people determined to be in the vehicle
- Whether Mercedes me connect is available or not
- Whether the emergency call was initiated manually or automatically
- Time of the accident
- Language setting on the multimedia system

For accident clarification purposes, the following measures can be taken up to an hour after the emergency call has been initiated:

- The current vehicle position can be called up.
- A voice connection to the vehicle occupants can be established

ⓘ For Russia: various functions, e.g. receiving traffic information, cannot be performed for up to two hours after sending an emergency call.

Function of the emergency call system self-diagnosis (Russia)

Your car verifies the operability of the emergency call system each time the ignition is ON. In case of system failure, you will be informed with text message on the instrument cluster and with red indicator SOS NOT READY on the media display.

Please, make sure, that during 30 seconds after switching ignition ON the red indicator SOS NOT READY in the upper right corner of the media display is switched OFF, this means the emergency call system passed diagnostics successfully. If necessary, switch ON the media display, if it was switched OFF before.

Starting/ending ERA-GLONASS test mode (Russia)

Requirements:

- The starter battery is sufficiently charged.
- The ignition is switched on.
- The vehicle has been stationary for at least one minute.

▶ **To start the test mode:** press and hold the [☎] button on the multifunction steering wheel for at least five seconds.
The test mode is started and automatically ends after the language test has been performed.

▶ **To end the test mode manually:** switch off the ignition.
The test mode is ended.

Online and Internet functions

Internet connection

Information on connecting to the Internet

WARNING Risk of distraction from information systems and communications equipment

If you operate information and communication equipment integrated in the vehicle when driving, you will be distracted from the traffic situation. This could also cause you to lose control of the vehicle.

- Only operate this equipment when the traffic situation permits.
- If you cannot be sure of this, stop the vehicle whilst paying attention to road and traffic conditions and operate the equipment with the vehicle stationary.

You must observe the legal requirements for the country in which you are currently driving when operating the multimedia system.

WARNING Risk of an accident from operating mobile communication equipment while the vehicle is in motion

Mobile communications devices distract the driver from the traffic situation. This could also cause the driver to lose control of the vehicle.

- As the driver, only operate mobile communications devices when the vehicle is stationary.
- As a vehicle occupant, only use mobile communications devices in the areas intended for this purpose, e.g. in the rear passenger compartment.

You must observe the legal requirements for the country in which you are currently driving when operating mobile communication equipment in the vehicle.

Depending on the vehicle's equipment, you can establish an Internet connection in the following ways:

- **Vehicles with a communication module:** Internet use including Mercedes me connect services and data roaming (→ page 429).
- **Vehicles without a communication module:**
  - via Wi-Fi with a data-enabled mobile phone (→ page 430)
  - via Bluetooth® with a data-enabled mobile phone (→ page 430)
- via car telephony

The Internet functions can only be used to a limited degree whilst driving.

Function of the communication module

On vehicles with a built-in communication module, the Internet connection is established via an integrated SIM card.

To use Internet access via the communication module the following conditions must be met:

- Mercedes me connect is active and ready for operation.
- Mercedes me connect is activated for Internet access.
- In some countries: data volume via Mercedes me connect is available.

In some countries: if the data volume limit is reached, the availability of Mercedes me connect services is limited. The data volume must be purchased via Mercedes me connect.

ⓘ Contact a Mercedes-Benz service centre to find out whether it is possible to purchase data volume in your country.

Setting up an Internet connection via Wi-Fi
Requirements:

- the Wi-Fi function is activated on the multimedia system (→ page 339).
- the Wi-Fi function is activated on the mobile phone (see the manufacturer's operating instructions).
- Internet access via Wi-Fi is activated (see the manufacturer's operating instructions).

The Internet connection via Wi-Fi is restricted or does not function if:

- the mobile phone is switched off
- mobile data use is deactivated on the mobile phone
- the Wi-Fi function is deactivated on the multimedia system
- the Wi-Fi function is deactivated on the mobile phone
- Internet access via Wi-Fi is deactivated on the mobile phone

Multimedia system:

→ ⌂ ⏩ Settings ⏩ System ⏩ Wi-Fi & Bluetooth ⏩ Internet settings ⏩ Connect via Wi-Fi

▶ Select the network.

▶ Log in to the Wi-Fi network (→ page 339).

Setting up an Internet connection via Bluetooth®
Requirements:

- The mobile phone supports the Bluetooth® profile PAN (**P**ersonal **A**rea **N**etwork).
- The mobile phone is connected to the multimedia system via Bluetooth® (→ page 400).

  If a mobile phone is connected to the multimedia system for the first time via Bluetooth®, you will be assisted through the process of setting up an Internet connection.

  The Internet connection can also be configured manually.

Multimedia system:

→ ⌂ ⏩ Settings ⏩ System ⏩ Wi-Fi & Bluetooth ⏩ Internet settings ⏩ Connect via Bluetooth

▶ Select the mobile phone.
The Internet connection is established.

The Internet connection via Bluetooth® is restricted or does not function in the following cases:

- the mobile phone is switched off

- the mobile phone is connected a an additional mobile phone
- the mobile phone network coverage is insufficient
- mobile data use is deactivated on the mobile phone
- the Bluetooth® function on the multimedia system is switched off and the mobile phone is to be connected via Bluetooth®
- the Bluetooth® function is switched off on the mobile phone and the mobile phone is to be connected via Bluetooth®
- neither the mobile phone network nor the mobile phone allow simultaneous use of a telephone and an Internet connection
- the mobile phone has not been enabled for Internet access via Bluetooth®

Establishing an automatic Internet connection

Multimedia system:

Settings » System » Wi-Fi & Bluetooth » Internet settings

- Highlight the mobile phone.
- Select ›.
- Activate Permanent Internet connection.

Cancelling Internet access permission for a mobile phone

Multimedia system:

Settings » System » Wi-Fi & Bluetooth » Internet settings

- Select › in the line of the mobile phone.
- Select Delete configuration.
- Select Yes.

Displaying mobile phone details

Multimedia system:

Settings » System » Wi-Fi & Bluetooth » Internet settings

- Select › in the line of the mobile phone.
- Select Details.

Establishing an Internet connection

Multimedia system:

Mercedes me & Apps

- For example, select Browser.

ⓘ The multimedia system usually establishes the Internet connection automatically. If the multimedia system is not connected to the Internet, the Internet connection is established when an Internet application is used.

ⓘ The availability of the function is dependent on the country.

Setting automatic disconnection of the Internet connection

Multimedia system:

→ ⌂ ▸▸ Settings ▸▸ System ▸▸ Wi-Fi & Bluetooth ▸▸ Internet settings

▶ Select ⟩ in the line of the mobile phone.

▶ Select Disconnect when inactive.

The following options are available:

- 5 minutes
- 10 minutes
- 20 minutes
- Unlimited

▶ Select an option.

Connection status

Connection status overview

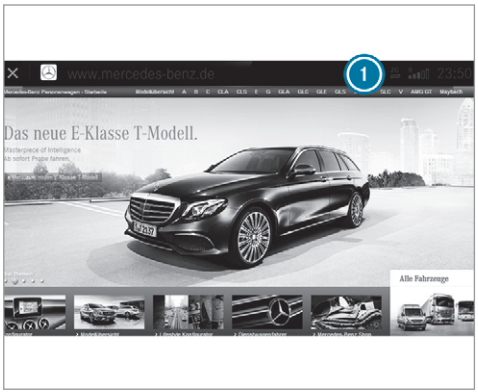

1 Display of existing connection (double arrow) and reception field strength of the communication module or of the connected Bluetooth® device

ⓘ The function is country-dependent.

Displaying the connection status

Multimedia system:

→ ⌂ ▸▸ Settings ▸▸ System ▸▸ Wi-Fi & Bluetooth

▶ Select Internet status.

- When connected via Wi-Fi or a Bluetooth® device, the approximate data volume transmitted is displayed. The exact values can be requested from your mobile phone network provider.
- In the case of a connection via the communication module the following status information is shown:
  - Type of network
  - Status online/offline

Web browser

Calling up a web page

WARNING Risk of distraction from information systems and communications equipment

If you operate information and communication equipment integrated in the vehicle when driving, you will be distracted from the traffic situation. This could also cause you to lose control of the vehicle.

- Only operate this equipment when the traffic situation permits.
- If you cannot be sure of this, stop the vehicle whilst paying attention to road and traffic conditions and operate the equipment with the vehicle stationary.

You must observe the legal requirements for the country in which you are currently driving when operating the multimedia system.

Multimedia system:

Mercedes me & Apps

Browser

Calling up a new web page

- Select URL.
- Entering a web address
- Select ok .

The function is country-dependent.

Websites cannot be shown while the vehicle is in motion.

Calling up a website from the browser history

- To call up the previous or next page from the history: select ← or →.

Web browser overview

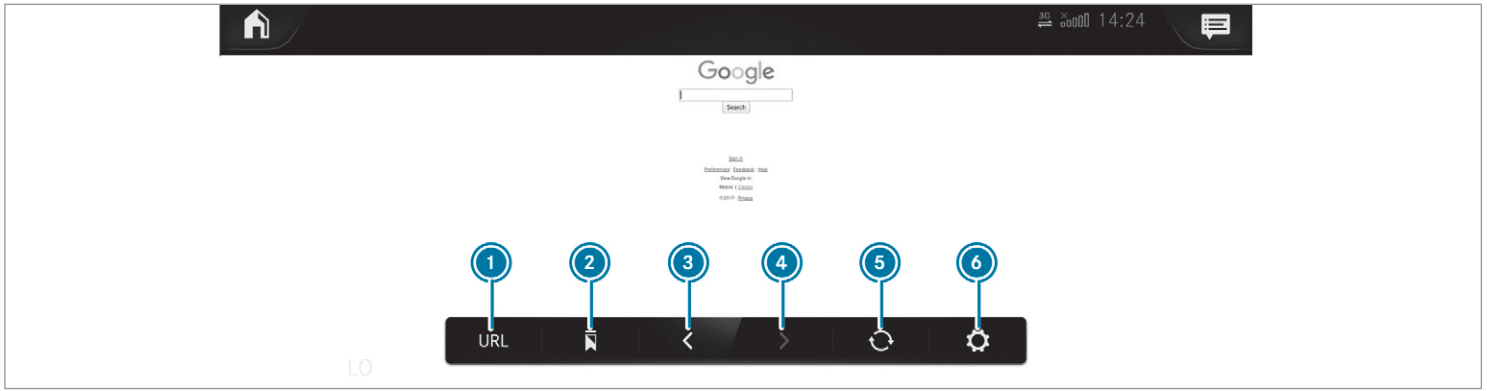

1. URL entry
2. Bookmarks
3. Web page, back
4. Web page, forwards
5. To refresh/stop
6. Options

Calling up web browser options

Multimedia system:

→ Mercedes me & Apps ▸▸ Browser ▸▸

The following functions are available:

- Bookmarks
- Options with the settings:
  - Browser settings
  - Delete browser data

▶ Select an option.

▶ Change the settings.

Calling up the web browser settings
Multimedia system:
→ ⌂ ▸▸ Mercedes me & Apps
▸▸ 🌐 Browser ▸▸ ⚙ ▸▸ Browser settings
The following functions are available:
- Block popups
- Enable Javascript
- Enable cookies

▶ **To switch a function on:** activate the display button.
▶ **To switch a function off:** deactivate the display button.

Deleting Internet history
Multimedia system:
→ ⌂ ▸▸ Mercedes me & Apps
▸▸ 🌐 Browser ▸▸ ⚙
▸▸ Delete browser data
The following options are available:
- All
- Cache
- Cookies
- History
- Entered URLs
- Form data

▶ Select an option.
▶ Select Yes.

Managing bookmarks
Multimedia system:
→ ⌂ ▸▸ Mercedes me & Apps
▸▸ 🌐 Browser
▶ Select ☆.

Selecting a bookmark
▶ Select an entry.

Creating a bookmark
▶ Select Add current site to bookmarks.
The bookmark is created.

Editing a bookmark
▶ Select › after a bookmark.
▶ Select Edit.
▶ Enter the name.
▶ Select OK.

Deleting a bookmark
▶ Select › after a bookmark.
▶ Select Delete.
▶ Select Yes.

Closing the browser
Multimedia system:
→ ⌂ ▸▸ Mercedes me & Apps
▸▸ 🌐 Browser
▶ Select ⌂.

TuneIn radio

Calling up TuneIn radio
Requirements:
- A Mercedes me account is available.
- The vehicle is connected with the Mercedes me account.
- The TuneIn radio service is activated in the Mercedes me portal.
- The data volume is available.

Depending on the country, data volume may need to be purchased.

- A fast Internet connection for data transmission free of interference.

ⓘ New data volumes can be purchased in the Mercedes me portal

ⓘ The functions and services are country-dependent. For more information, consult a Mercedes-Benz service centre.

Multimedia system:

→ ⌂ ▸▸ Radio

▶ Select TuneIn radio.
The TuneIn menu appears. The last station set starts playing.

ⓘ The connection quality depends on the local mobile phone reception.

Overview of TuneIn radio

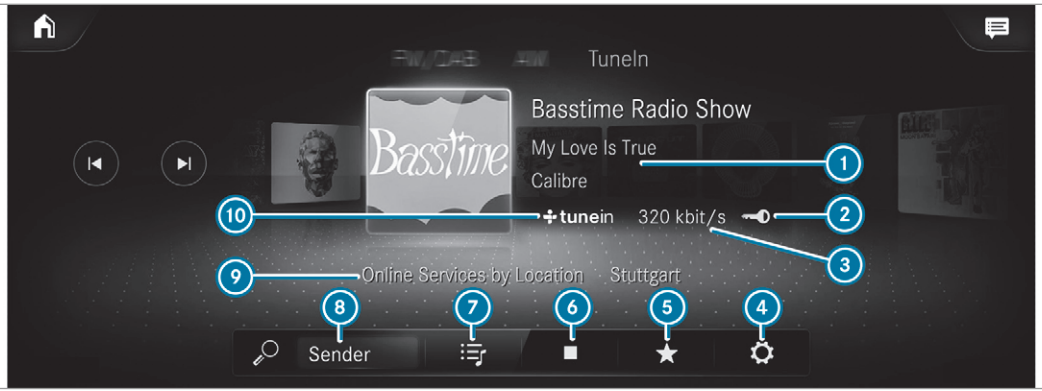

1. Additional information on the current station
2. Display (if connected to private user account)
3. Data transfer rate
4. Options
5. Favourites
6. To start/end
7. To browse
8. Search
9. Selected category
10. Internet Radio provider

Selecting and connecting to a TuneIn radio station

Multimedia system:

↳ Home ▸▸ Radio ▸▸ TuneIn radio

- Select the TuneIn radio symbol.
- Select a category.

▶ Select a station.
The connection is established automatically.

or

▶ Select the search field.
▶ Enter a station name.

ⓘ A relatively large volume of data can be transmitted when using TuneIn radio.

Saving/deleting a TuneIn radio station as a favourite

Multimedia system:

↳ ⌂ ⏩ Radio ⏩ TuneIn radio

▶ Select a station.
▶ Select ★.
The list of saved favourite stations appears.
▶ Select Add to favourites.

or

▶ Create an account for the online provider (TuneIn radio) and then log in on the multimedia system.
Your favourites are imported to the multimedia system.

Deleting favourites

▶ Select a station.
▶ Select ★.
▶ Select Delete favourite.

Setting the TuneIn radio options

Multimedia system:

↳ ⌂ ⏩ Radio ⏩ TuneIn radio ⏩ ⚙ ⏩ TuneIn radio

The following options are available:

- Select stream: select the stream quality.
- Login to TuneIn account: log in to your TuneIn user account.
- Log out of account: log out of your TuneIn user account.

▶ Select an option.

Showing the station list for the last category selected

Multimedia system:

↳ ⌂ ⏩ Radio ⏩ TuneIn radio

▶ Press the cover of the current station.
Depending on how the station was selected, a station list is shown.

Media

Information about media mode

Information about supported formats and data storage media

⚠ **WARNING** Risk of distraction when handling data storage media

If you handle a data storage medium while driving, your attention is diverted from the traffic conditions. This could also cause you to lose control of the vehicle.

▶ Only handle a data storage medium when the vehicle is stationary.

The multimedia system supports the following formats and data media:

Permissible file systems	FAT32, exFAT, NTFS
Permissible data carriers	USB devices, iPod®/iPhone®, MTP devices, Bluetooth® audio equipment
Supported audio formats	MP3, WMA, AAC, WAV, FLAC, ALAC
Supported video formats	MPEG, AVI, DivX, MKV, MP4, M4V, WMV

ⓘ Observe the following notes:

- The multimedia system supports a total of up to 50,000 files.
- Data storage media up to 2 TB are supported (32-bit address space).
- Due to the large variety of available music and video files regarding encoders, sampling rates and data transfer rates, playback cannot be guaranteed.
- Due to the wide range of USB devices available on the market, playback cannot be guaranteed for all USB devices.
- Videos up to FullHD (1920x1080) are supported.
- Copy-protected music and video files or DRM (Digital Rights Management) encrypted files cannot be played back.
- MP3 players must support Media Transfer Protocol (MTP).

Information on copyright protection and trademarks

Audio files which you create yourself (e.g. copies of data storage media you make yourself) are generally subject to copyright protection. In many countries, reproductions are not permitted without the prior consent of the copyright holder, even for private use. Make sure that you know about the applicable copyright regulations and that you comply with these.



Manufactured under licence from Dolby Laboratories. Dolby, Dolby Audio and the double-D symbol are trademarks of Dolby Laboratories.



Gracenote, the Gracenote logo and logotype, "Powered by Gracenote", MusicID and Playlist Plus are either registered trademarks or trademarks of Gracenote, Inc. in the United States and/or other countries.



TIDAL and TIDAL logo are registered trademark of Aspiro AB in the European Union and other countries.

Overview of the media menu

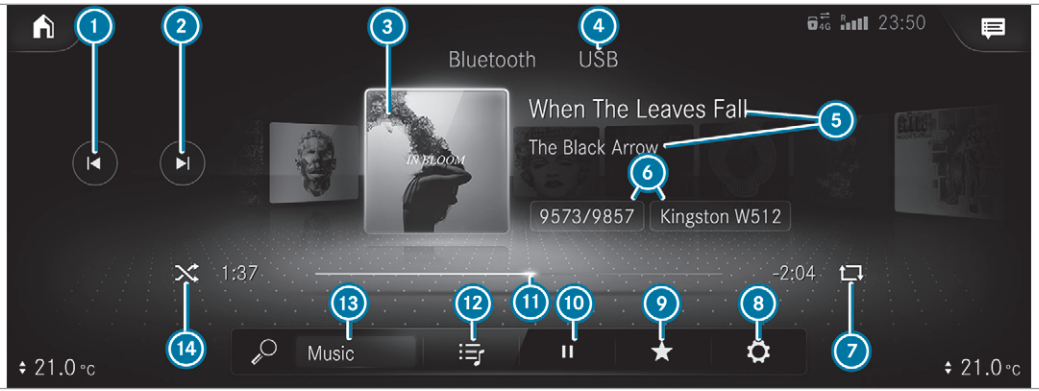

1. Previous track or fast rewind
2. Next track or fast forward
3. Album cover
4. Active media source
5. Track and artist
6. Current track number/track in playback list and active data storage medium
7. Repeat
8. Settings
9. Additional options
10. Controls playback
11. Timeline
12. Categories
13. Music search
14. Random playback

Connecting the data storage medium to the multimedia system

Connecting USB devices

NOTE Damage caused by high temperatures

High temperatures can damage USB devices.

▶ Remove the USB device after use and take it out of the vehicle.

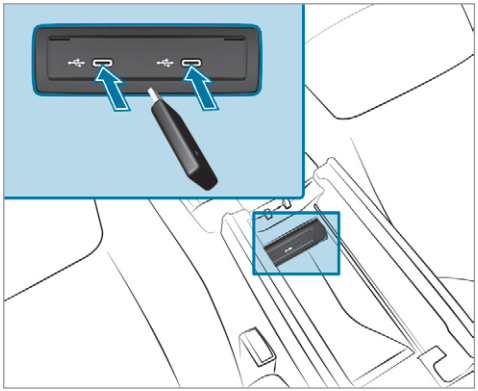

The multimedia connection unit is found in the stowage compartment under the armrest and has two type C USB ports. Depending on the vehicle's equipment, additional USB ports can be found in the stowage compartment of the centre console or rear folding compartment.

▶ Connect the USB device to the USB port.

ⓘ USB hubs cannot be connected with the multimedia system.

ⓘ When connecting several Apple® devices simultaneously, pay attention to the order in which the devices are connected. The multimedia system only connects with the device that is connected first. Additional Apple® devices that are connected at the same time are only supplied with power.

Searching for and authorising a Bluetooth® audio device

Requirements:

- Bluetooth® is activated on the multimedia system and audio equipment.
- The audio equipment supports the Bluetooth® audio profiles A2DP and AVRCP.
- The audio equipment is "visible" for other devices.

Multimedia system:

→ ⌂ » Media » Bluetooth » ᛒ

Authorising a new Bluetooth® audio device

- Select Connect new device.
  Detected equipment is displayed in the device list.
- Select an audio device.
  Authorisation starts. A code is displayed on the multimedia system and on the mobile phone.
- If the codes are identical, confirm on the audio equipment.
- Select Only as Bluetooth audio device.
  The Bluetooth® audio equipment is connected with the multimedia system.

Connecting previously authorised Bluetooth® audio equipment

- Select a Bluetooth® audio device from the list.
  The connection is established.

Starting media playback

Requirements:

- A data storage medium is connected to the multimedia system.

Multimedia system:

→ ⌂ » Media

- Select USB or Bluetooth as the media source.

Controlling media playback

Multimedia system:

→ ⌂ » Media

- **To pause playback:** select ⏸.
- **To continue playback:** select ▶.
- **To repeat a track:** select ↻.
  For the repeat function there are the following settings:
  - **Select once:** the active playlist is repeated.
  - **Select twice:** the current track is repeated.
  - **Select three times:** the repeat function is deactivated.
- **To play back tracks in random order:** select ⤮.
- **To wind a track forwards or backwards:** tap on the desired point on the timeline.
- **To select the next track:** select ⏭.
- **To select the previous track:** select ⏮.
- **To scroll through tracks quickly:** press and hold ⏮ or ⏭.
- **To show the current track list:** select the track image shown.

Additional options for setting media playback

Multimedia system:

→ ⌂ ›› Media

Calling up additional options

▶ Select ★.
The additional options are shown.

The following options are available:

- Play similar tracks
  Select during playback of a track in order to create a playlist with similar tracks.
- Surprise mix
  A playlist with randomly selected tracks is created.
- Add to favourite songs
  The current track is added to the favourite songs.
- Delete from favourite songs
  The current track is removed from the favourite songs.

▶ Select an option.

Music online

Calling up music online
Requirements:

- A Mercedes me account is available.
- The vehicle is connected with the Mercedes me account.
- The online music service is activated in the Mercedes me portal.
- There is an account for the music streaming service.
- A subscription for the music streaming service has been obtained.
- The data volume is available.
  Depending on the country, data volume may need to be purchased.
- A fast Internet connection for data transmission free of interference.

ⓘ New data volumes can be purchased via the Mercedes me portal.

ⓘ The functions and services are country-dependent. For more information, consult a Mercedes-Benz service centre.

Multimedia system:

→ ⌂ ›› Media

▶ Select Online music.
With Online music you can listen to music via a streaming service.

ⓘ The online music menu is only shown if the online music service is activated in the Mercedes me portal and an account for the music streaming service is connected. The services in the Mercedes me portal have to be activated seperately for each vehicle.

Music playback can be controlled with the Touch Control, the touchscreen, the touchpad or using the media application.

Searching for music in online music
Multimedia system:

→ ⌂ ›› Media ›› Online music

Searching for categories in online music
The media content of the streaming provider can be scanned through in the category search. The

available categories depend on the streaming provider.

- Select [≡♪]. The list of available categories appears.
- Select a category.

Keyword search in online music

You can look for content using the keyword search with free text input.

- Select [🔍]. A keyboard for character entry appears.
- Enter the term searched for.

ⓘ The search begins from the first three characters entered. The more characters entered the more concrete the search results become.

- Select the desired entry from the result list. If the selected result is an album, song or a playback list then playback is started. If the selected result is a new category then this is opened in the search.

Configuring online music options

Multimedia system:

→ [⌂] » Media » Online music

- During media playback, press [★] in the Media menu. Three options appear:
  - Add the song to your own favourites
  - Add the song to a playback list
  - The Title Radio option
- Select one of the three options.

ⓘ If Title Radio is selected, a playback list with similar music tracks is created. The available options depend on what is offered by the provider of the streaming service.

Media search

Notes about the search function in categories

Under [≡♪] you can search through all available media files. There are several categories available for selection. The categories shown depend on the connected device and data format.

Available categories with Bluetooth® audio:

- Current tracklist

  The folders and categories of the connected device are shown.

Available categories with audio files:

- Current tracklist
- Playlists
- Folder
- Albums
- Artists
- Tracks
- Favourite songs
- Frequently played
- Most recently added
- Mood (→ page 446)
- Music genres
- Year
- Composers

- Select by cover
- Podcasts (Apple® devices)
- Audiobooks (Apple® devices)

Available categories with video files:

- Folder
- Videos

ⓘ The categories are available as soon as the entire media content has been read in and analysed.

Starting a search in categories

Multimedia system:

→ ⌂ ▸▸ Media ▸▸ ♫

▶ Select a category.

▶ Select 🔍 and enter a search term.

Sorting results shown or playing back all media found

▶ Select •••.

▶ **To play back all results found in the category:** select Play all.
If, for example, the Albums category is active, all albums found by the desired artist will be played back.

▶ **To sort results alphabetically:** select Sort from A-Z.

▶ **To sort results in reverse alphabetical order:** select Sort from Z-A.

ⓘ The available options depend on the selected category and the connected device.

Using the keyword search

Multimedia system:

→ ⌂ ▸▸ Media

You can look for content using the keyword search with free text input.

▶ Select 🔍.
A keyboard for character entry appears.

▶ Enter the term searched for.

ⓘ The search begins with the first character entered. The more characters entered the more concrete the search results become.

▶ Select the desired entry from the result list. If the selected result is an album, song or a playback list then playback is started. If the selected result is a new category then this is opened in the search.

Searching for a track according to mood

Multimedia system:

→ ⌂ ▸▸ Media ▸▸ ♫

By searching in categories, you can find music tracks suitable for a mood.

▶ Select Mood.
A grid with the following moods appears:
- Positive
- Calm
- Dark
- Energetic

▶ Pull the controller to the desired position.
The system searches for tracks that are suitable for the mood entered.

Making video settings

Multimedia system:

→ ⌂ » Media » ⚙ » General

- Select Video settings.
- Select an aspect ratio.

Setting full screen

- Select ◢.

Radio

Switching on the radio

Multimedia system:

→ ⌂ » Radio

- Alternatively: press the RADIO MEDIA button.
  The radio display appears. You will hear the last station played on the last frequency band selected.

Radio overview



1. Active frequency band
2. Station name or set frequency
3. Artist, title, album and radio text
4. Options
5. Full screen/DAB slideshow
6. Mute function
7. Station list
8. Search

Setting the frequency band

Multimedia system:

→ ⌂ ▸▸ Radio

▶ Select a frequency band.

Selecting a radio station

Multimedia system:

→ ⌂ ▸▸ Radio

▶ Swipe to the left or right on the control element.

Calling up the radio station list

Multimedia system:

→ ⌂ » Radio

- Select ☰.
  The station list appears.
- Select a station.

Searching for radio stations using station names or frequency entry

Multimedia system:

→ ⌂ » Radio

- Select 🔍.
- Enter a station name or frequency.
- Select a station.

Storing radio stations

Multimedia system:

→ ⌂ » Radio

- Select a radio station.

Memory slots are available in station presets

- Select ⊕.

or

- Press and hold on the radio station.

Replacing an entry in the station presets

- Press and hold on an entry in the station presets.
- Select Yes.

Editing station presets

Multimedia system:

→ ⌂ » Radio

Moving stations

- Press and hold a stored station.
- Select Move.
- Move the station to the new position.

Deleting stations

- Press and hold a station.
- Select Delete.

Replacing a station

- Press and hold a station.
- Select Replace radio station.

Calling up a slide show (FM/DAB radio mode)

Multimedia system:

→ ⌂ » Radio

The slide show displays additional information provided by the station as an image. This can include logos, album covers, music tracks, programmes, news or service information, for example.

- Select ▣.

Activating/deactivating the frequency fix function

Multimedia system:

→ ⌂ » Radio » ⚙ » General

- Switch Frequency fix on or off.
  If the function is activated, the set frequency is kept even if the reception is poor.

Activating/deactivating traffic announcements

Multimedia system:

↳ ⌂ ⏩ Radio ⏩ ⚙ ⏩ General

▶ Switch Traffic announcements (TA) on or off.

Setting the traffic information service volume increase

Multimedia system:

↳ ⌂ ⏩ Settings ⏩ Audio

▶ Select Navigation and traffic announcements.

▶ Select Traffic announc. vol. increase.

▶ Set a level between 0 and 10.

▶ Accept the value with ⟨.

Displaying radio text

Multimedia system:

↳ ⌂ ⏩ Radio ⏩ ⚙ ⏩ General

▶ Switch Radio text information on or off.

Sound

Tone settings

Information about the sound system

The sound system has a total output of 100 W and is equipped with six speakers. It is available for all functions in the radio and media modes.

Calling up the sound menu

Multimedia system:

↳ ⌂ ⏩ Media ⏩ ⚙ ⏩ Sound

The following functions are available:

- Equaliser
- Balance and Fader
- Volume

▶ Select a function.

Adjusting treble, mid-range and bass settings

Multimedia system:

↳ ⌂ ⏩ Media ⏩ ⚙ ⏩ Sound ⏩ Equaliser

▶ Set TREBLE, MID or BASS.

Activating/deactivating automatic volume adjustment

Multimedia system:

↳ ⌂ ⏩ Media ⏩ ⚙ ⏩ Sound ⏩ Volume

Automatic volume adjustment compensates for differing volumes when changing between audio sources and within an audio source.

▶ Switch Automatic adjustment on or off.

Adjusting the balance/fader

Multimedia system:

↳ ⌂ ⏩ Media ⏩ ⚙ ⏩ Sound ⏩ Balance and Fader

Adjusting the balance

▶ Move the volume distribution between the right and left sides of the vehicle in the grid shown.
The volume is distributed between the speakers on the left and right sides in the vehicle.

Adjusting the fader

▶ Move the volume distribution between the front and rear of the vehicle in the grid shown.
The volume is distributed between the speakers in the front and rear of the vehicle.

Burmester® surround sound system

Information about the Burmester® surround sound system
The Burmester® surround sound system has a total output of 590 W and is equipped with 12 speakers. It is available for all functions in the radio and media modes.

Calling up the sound menu in the Burmester® surround sound system
Multimedia system:
↳ ⌂ ›› Media ›› ⚙ ›› Burmester
The following functions are available:

- Equaliser
- Balance and Fader
- Sound focus
- Sound profiles
- Volume

▶ Select a function.

Adjusting the treble, mid and bass settings on the Burmester® surround sound system
Multimedia system:
↳ ⌂ ›› Media ›› ⚙ ›› Burmester ›› Equaliser

▶ Set TREBLE, MID or BASS.

Activating/deactivating volume adjustment in the Burmester® surround sound system
Multimedia system:
↳ ⌂ ›› Media ›› ⚙ ›› Burmester ›› Volume
Automatic volume adjustment compensates for differing volumes when changing between audio sources and within an audio source.

▶ Switch Automatic adjustment on or off.

Adjusting the balance/fader in the Burmester® surround sound system
Multimedia system:
↳ ⌂ ›› Media ›› ⚙ ›› Burmester ›› Balance and Fader

Adjusting the balance

▶ Move the volume distribution between the right and left sides of the vehicle in the grid shown.
The volume is distributed between the speakers on the left and right sides in the vehicle.

Adjusting the fader

▶ Move the volume distribution between the front and rear of the vehicle in the grid shown.
The volume is distributed between the speakers in the front and rear of the vehicle.

Selecting a sound profile in the Burmester® surround sound system
Multimedia system:
→ ⌂ ⏩ Media ⏩ ⚙ ⏩ Burmester ⏩ Sound profiles
The following profiles are available:
- Pure
- Surround

▶ Select a sound profile.

Adjusting the sound focus in the Burmester® surround sound system
Multimedia system:
→ ⌂ ⏩ Media ⏩ ⚙ ⏩ Burmester ⏩ Sound focus
▶ Select a position for the sound focus or All seats.

Advanced sound system

Information about the Advanced sound system
The Advanced sound system has a total output of 225 W and is equipped with ten speakers. It is available for all functions in the radio and media modes.

Calling up the sound menu in the Advanced sound system
Multimedia system:
→ ⌂ ⏩ Media ⏩ ⚙ ⏩ Sound
The following functions are available:
- Equaliser
- Balance and Fader
- Volume

▶ Select a function.

Adjusting treble, mid-range and bass settings in the Advanced sound system
Multimedia system:
→ ⌂ ⏩ Media ⏩ ⚙ ⏩ Sound ⏩ Equaliser
▶ Set TREBLE, MID or BASS.

Switching volume adjustment in the Advanced sound system on/off
Multimedia system:
→ ⌂ ⏩ Media ⏩ ⚙ ⏩ Sound ⏩ Volume
Automatic volume adjustment compensates for differing volumes when changing between audio sources and within an audio source.
▶ Switch Automatic adjustment on or off.

Setting the balance/fader in the Advanced sound system

Multimedia system:

→ ⌂ » Media » ☼ » Sound » Balance and Fader

Adjusting the balance

- Move the volume distribution between the right and left sides of the vehicle in the grid shown.
  The volume is distributed between the speakers on the left and right sides in the vehicle.

Adjusting the fader

- Move the volume distribution between the front and rear of the vehicle in the grid shown.
  The volume is distributed between the speakers in the front and rear of the vehicle.

ASSYST PLUS service interval display

Function of the ASSYST PLUS service interval display

The ASSYST PLUS service interval display on the instrument display provides information on the remaining time or distance before the next service due date.

You can hide this service display using the back button on the left-hand side of the steering wheel.

Depending on how the vehicle is used, the ASSYST PLUS service interval display may shorten the service interval, e.g. in the following cases:

- mainly short-distance driving
- when the engine is often left idling for long periods
- in the event of frequent cold start phases
- **vehicles with a diesel particulate filter:** in the event of frequently interrupted regeneration of the diesel particulate filter

Mercedes-Benz recommends avoiding such operating conditions.

You can obtain information concerning the servicing of your vehicle from a qualified specialist workshop, e.g. a Mercedes-Benz Service Centre.

Displaying the service due date

On-board computer:

Service ⏩ ASSYST PLUS

The next service due date is displayed.

▶ **To exit the display:** press the back button on the left-hand side of the steering wheel.

Be sure to also pay attention to the following related topic:

- Operating the on-board computer (→ page 269).

Information on regular maintenance work

NOTE Premature wear through failure to observe service due dates

Service work which is not carried out at the right time or incompletely can lead to increased wear and damage to the vehicle.

▶ Always observe the prescribed service intervals.

▶ Always have the prescribed service work carried out at a qualified specialist workshop.

Special service requirements

The prescribed service interval is based on normal operation of the vehicle. Maintenance work will need to be performed more often if the vehicle is operated under arduous conditions or increased loads.

The ASSYST PLUS service interval display is only an aid. The driver of the vehicle bears responsibility as regards to whether maintenance work needs to be performed more often than speci-

fied based on the actual operating conditions and/or loads.

Examples of arduous operating conditions:

- regular city driving with frequent intermediate stops
- mainly short-distance driving
- frequent operation in mountainous terrain or on poor road surfaces
- when the engine is often left idling for long periods
- operation in particularly dusty conditions and/or if air-recirculation mode is frequently used

In these or similar operating conditions, have the interior air filter, engine air cleaner, engine oil and oil filter etc. changed more frequently. The tyres must be checked more frequently if the vehicle is operated under increased loads. Further information can be obtained at a qualified specialist workshop.

Battery disconnection periods

The ASSYST PLUS service interval display can only calculate the service due date when the battery is connected.

▶ Note down the service due date displayed on the instrument display before disconnecting the battery (→ page 454).

Engine compartment

Active bonnet (pedestrian protection)

Operation of the active bonnet (pedestrian protection)

In certain accident situations, the risk of injury to pedestrians can be reduced by the actuation of the active bonnet. The rear area of the engine bonnet is raised by approximately 70 mm.

For the drive to the workshop, reset the triggered active bonnet yourself. After the active bonnet has been triggered, pedestrian protection may be limited.

A qualified specialist workshop must re-instate the full functionality of the active bonnet.

The active bonnet is not available in all countries.

Resetting the active bonnet

⚠ **WARNING** Risk of burns from hot component parts in the engine compartment

Certain components in the engine compartment can be very hot, e.g. the engine, the radiator and parts of the exhaust system.

▶ Allow the engine to cool down and only touch component parts described in the following.

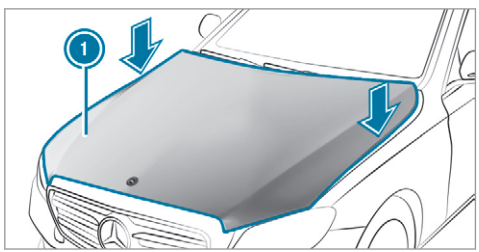

- With your hand flat, push down active bonnet (1) in the area around the hinges on both sides (arrows).
  In doing so, the actuator is depressurised and you may hear a hissing sound.
  The engine bonnet must engage in position.
- If active bonnet (1) can be raised slightly at the rear in the area of the hinges, repeat the step until it engages correctly.

Opening/closing the bonnet

WARNING Risk of accident due to driving with the engine bonnet unlocked

An unlocked engine bonnet may open up when the vehicle is in motion and block your view.

- Never unlock the engine bonnet when driving.
- Before every trip, ensure that the engine bonnet is locked.

WARNING Risk of accident and injury when opening and closing the engine bonnet

When opening or closing the engine bonnet, it may suddenly drop into the end position.

There is a risk of injury for anyone in the engine bonnet's range of movement.

- Only open or close the engine bonnet when there are no persons in the engine bonnet's range of movement.

WARNING Danger of burns when opening the bonnet

If you open the engine bonnet when the engine has overheated or during a fire in the engine compartment, you could come into contact with hot gases or other escaping operating fluids.

- Before opening the bonnet, allow the engine to cool down.
- In the event of a fire in the engine compartment, keep the engine bonnet closed and call the fire service.

WARNING Risk of injury due to moving parts

Certain components in the engine compartment may continue to move or suddenly move again even after the ignition has been switched off, e.g. the cooler fan.

Make sure of the following before performing tasks in the engine compartment:

- Switch the ignition off.
- Never touch the danger zone surrounding moving component parts, e.g. the rotation area of the fan.
- Remove jewellery and watches.
- Keep items of clothing and hair away from moving parts.

WARNING Risk of injury from touching component parts under voltage

The ignition system and the fuel injection system work under high voltage. If you touch component parts which are under voltage, you could receive an electric shock.

- Never touch components of the ignition system or the fuel injection system when the ignition is switched on.

WARNING Risk of burns from hot component parts in the engine compartment

Certain components in the engine compartment can be very hot, e.g. the engine, the radiator and parts of the exhaust system.

- Allow the engine to cool down and only touch component parts described in the following.

WARNING Risk of injury from using the windscreen wipers while the engine bonnet is open

When the engine bonnet is open, and the windscreen wipers are set in motion, you can be trapped by the wiper linkage.

- Always switch off the windscreen wipers and ignition before opening the engine bonnet.

Plug-in hybrid: be sure to observe the notes in the Supplement. Otherwise, you may fail to recognise dangers.

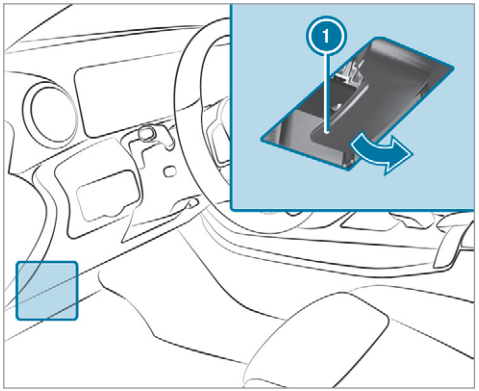

- **To open:** pull lever (1) to release the bonnet.

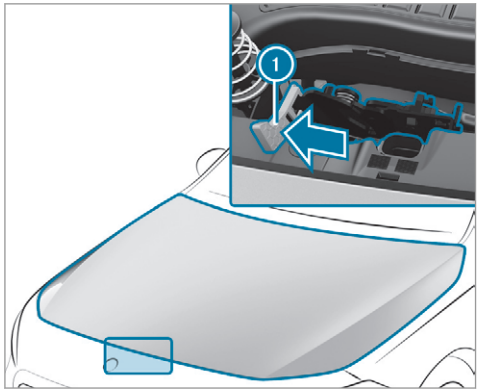

▶ Push yellow handle (1) on the bonnet catch to the left as far as it will go (palm downwards). Lift the bonnet until it is automatically raised by the pneumatic strut.
▶ **To close:** lower the bonnet and let it fall from a height of approximately 20 cm.
▶ If the bonnet can still be lifted slightly, open the bonnet again and close it with a little force until it engages correctly.

Engine oil

Checking the engine oil level using the on-board computer
Requirements:

- The engine has warmed up.
- The vehicle is parked on a level surface.
- The engine is running at idle speed.

The engine oil level is determined during driving. Determining the engine oil level can take up to 30 minutes with a normal driving style and even longer with an active driving style.

On-board computer:

→ Service ▸▸ Engine oil level

You will see one of the following messages on the multifunction display:

- Engine oil level Measuring now: measurement of the oil level is not yet possible.

▶ Repeat the request after a maximum of 30 minutes driving.

- Engine oil level OK and the bar display for indicating the oil level on the multifunction display is green and is between "min" and "max": the oil level is correct.
- Engine oil level Add 1,0 l and the bar display for indicating the oil level on the multifunction display is orange and is below "min":

▶ Add 1 l of engine oil.

- Reduce engine oil level and the bar display for indicating the oil level on the multifunction display is orange and is above "max":

▶ Drain off any excess engine oil that has been added. To do so, consult a qualified specialist workshop.

- For engine oil level turn on ignition:

▶ Switch on the ignition to check the engine oil level.

- Engine oil level System inoperative: sensor faulty or not inserted.

▶ Consult a qualified specialist workshop.

- Engine oil level System currently unavail.:

▶ Close the bonnet.

Topping up engine oil

WARNING Risk of burns from hot component parts in the engine compartment

Certain components in the engine compartment can be very hot, e.g. the engine, the radiator and parts of the exhaust system.

- Allow the engine to cool down and only touch component parts described in the following.

WARNING Risk of fire and injury from engine oil

If engine oil comes into contact with hot component parts in the engine compartment, it may ignite.

- Make sure that no engine oil is spilled next to the filler opening.
- Allow the engine to cool off and thoroughly clean the engine oil from component parts before starting the vehicle.

NOTE Engine damage caused by an incorrect oil filter, incorrect oil or additives

- Do not use engine oils or oil filters which do not correspond to the specifications explicitly prescribed for the service intervals.
- Do not alter the engine oil or oil filter in order to achieve longer change intervals than prescribed.
- Do not use additives.
- Follow the instructions in the service interval display regarding the oil change.

NOTE Damage caused by topping up too much engine oil

Too much engine oil can damage the engine or the catalytic converter.

- Have excess engine oil removed at a qualified specialist workshop.

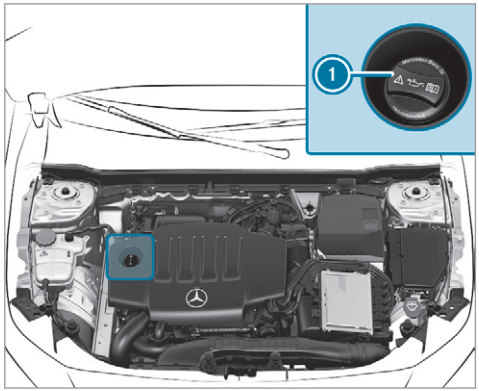

- Turn cap (1) anti-clockwise and remove it.
- Top up the engine oil.
- Replace cap (1) and turn it clockwise as far as it will go.
- Check the oil level again (→ page 458).

Checking the coolant level

WARNING Risk of burns from hot component parts in the engine compartment

Certain components in the engine compartment can be very hot, e.g. the engine, the radiator and parts of the exhaust system.

- Allow the engine to cool down and only touch component parts described in the following.

WARNING Risk of scalding from hot coolant

The engine cooling system is pressurised, particularly when the engine is warm. If you open the cap, you could be scalded by hot coolant spraying out.

- Let the engine cool down before opening the cap.
- When opening the cap, wear protective gloves and safety glasses.
- Open the cap slowly to release pressure.

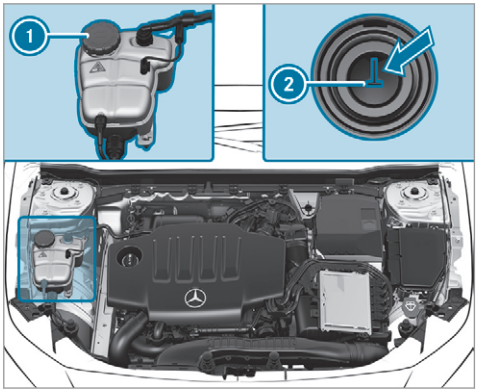

- Park the vehicle on a level surface.
- Check the coolant temperature display in the instrument cluster.
  The coolant temperature must be below 70 °C.
- Slowly turn cap (1) anti-clockwise to relieve overpressure.
- Continue turning cap (1) anti-clockwise and remove it.

The coolant level is correct in the following cases:

- if the engine is cold, the coolant is up to marker bar (2).
- if the engine is warm, the coolant is up to 1.5 cm over the marker bar (2).

- If necessary, top up with coolant that has been approved for Mercedes-Benz.
- Further information on coolant (→ page 531).

Topping up the windscreen washer system

WARNING Risk of burns from hot component parts in the engine compartment

Certain components in the engine compartment can be very hot, e.g. the engine, the radiator and parts of the exhaust system.

- Allow the engine to cool down and only touch component parts described in the following.

⚠ WARNING Danger of burns when opening the bonnet

If you open the engine bonnet when the engine has overheated or during a fire in the engine compartment, you could come into contact with hot gases or other escaping operating fluids.

- Before opening the bonnet, allow the engine to cool down.
- In the event of a fire in the engine compartment, keep the engine bonnet closed and call the fire service.

⚠ WARNING - Risk of fire and injury due to windscreen washer concentrate

Windscreen washer concentrate is highly flammable. It could ignite if it comes into contact with hot engine component parts or the exhaust system.

- Make sure that no windscreen washer concentrate spills out next to the filler opening.

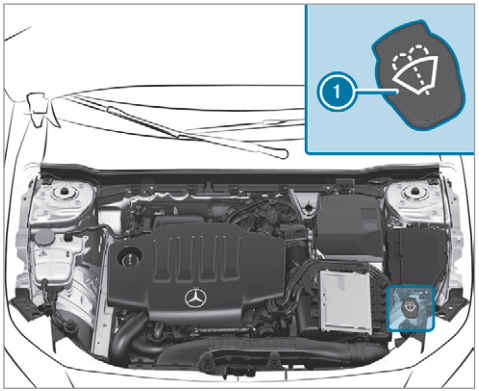

- Remove the cap (1) by the tab.
- Top up the washer fluid.

Keeping the air-water duct free

- Keep the area between the bonnet and the windscreen free of deposits, e.g. ice, snow and leaves.

Cleaning and care

Information on washing the vehicle in a car wash

⚠ WARNING Risk of an accident due to reduced braking power after washing the vehicle

Braking efficiency is reduced after washing the vehicle.

- After the vehicle has been washed, brake carefully while paying attention to the traffic conditions until braking power has been fully restored.

NOTE Damage due to unsuitable car wash

- ▶ Before driving into a car wash make sure that the car wash is suitable for the vehicle dimensions.
- ▶ Ensure there is sufficient ground clearance between the underbody and the guide rails of the car wash.
- ▶ Ensure that the clearance width of the car wash, in particular the width of the guide rails, is sufficient.

To avoid damage to your vehicle when using a car wash, ensure the following beforehand:

- Active Distance Assist DISTRONIC and the HOLD function are deactivated.
- the 360° Camera or the reversing camera is switched off.
- the side windows and sliding sunroof are completely closed.
- the blower for the ventilation/heating is switched off.
- the windscreen wiper switch is in position 0.
- the key is at a minimum distance of 3 m away from the vehicle, otherwise the tailgate could open unintentionally.
- in car washes with a conveyor system: neutral N is engaged.

ⓘ In car washes with a conveyor system: if you would like to leave the vehicle while it is being washed, make sure the key is located in the vehicle. The park position P is otherwise automatically engaged.

ⓘ If, after the car wash, you remove the wax from the windscreen and wiper rubbers, this will prevent smearing and reduce wiper noise.

Information on using a high-pressure cleaner

WARNING Risk of an accident when using high-pressure cleaners with circular jet nozzles

The water jet of a circular jet nozzle (dirt grinder) can cause externally invisible damage to the tyres or chassis parts.

Components damaged in this way may unexpectedly fail.

- ▶ Do not use high-pressure cleaners with circular jet nozzles to clean the vehicle.
- ▶ Have damaged tyres or chassis parts replaced immediately.

To avoid damage to your vehicle, observe the following when using a high-pressure cleaner:

- keep the key at least 3 m away from the vehicle. Otherwise the tailgate could open unintentionally.
- maintain a distance of at least 30 cm to the vehicle.

- **vehicles with decorative foil:** parts of your vehicle are covered with a decorative foil. Maintain a distance of at least 70 cm between the foil-covered parts of the vehicle and the nozzle of the high-pressure cleaner. Move the high-pressure cleaner nozzle around whilst cleaning. The water temperature of the high-pressure cleaner must not exceed 60 °C.
- observe the information on the correct distance in the equipment manufacturer's operating instructions.
- do not point the nozzle of the high-pressure cleaner directly at sensitive parts such as tyres, slits, electrical components, batteries, light bulbs and ventilation slots.

Washing the vehicle by hand

Observe the legal requirements, e.g. in a number of countries, washing by hand is only permitted in specially designated wash bays.

▶ Use a mild cleaning agent, e.g. car shampoo.

▶ Wash the vehicle with lukewarm water using a soft car sponge. When doing so, do not expose the vehicle to direct sunlight.

▶ Carefully hose the vehicle off with water and dry using a chamois. Take care not to point the water jet directly towards the air inlet grille below the bonnet.

Notes on paintwork/matt finish paintwork care

Observe the following information:

	Cleaning and care	Avoiding paintwork damage
Paintwork	• Insect remains: soak with insect remover and rinse off the treated areas afterwards. • Bird droppings: soak with water and rinse off afterwards. • Tree resin, oils, fuels and greases: remove by rubbing gently with a cloth soaked in petroleum ether or lighter fluid. • Coolant and brake fluid: remove with a damp cloth and clean water. • Tar stains: use tar remover. • Wax: use silicone remover.	• Do not attach stickers, films or similar materials. • Remove dirt immediately, where possible.

	Cleaning and care	Avoiding paintwork damage
Matt finish	Only use care products approved for Mercedes-Benz.	• Do not polish the vehicle and light-alloy wheels. • Only use car washes that correspond to the latest engineering standards. • Do not use car wash programmes with a final hot wax treatment. • Do not use paint cleaners, buffing or polishing products, gloss preservers, e.g. wax. • Always have paintwork repairs carried out at a qualified specialist workshop.

Notes on cleaning decorative foils

Observe the notes on matt finish care in the chapter "Notes on paintwork/matt finish paintwork care" (→ page 464). They also apply to matt decorative foils.

Observe the following information:

Cleaning	Avoiding damage to the decorative foil
• For cleaning, use plenty of water and a mild cleaning agent without additives or abrasive substances, e.g. a car shampoo approved for Mercedes-Benz. • Remove dirt immediately, where possible, whilst avoiding rubbing too hard. There is otherwise a risk of damaging the decorative foil irreparably. • If there is dirt on the finish or if the decorative foil is dull: use the Paint Cleaner recommended and approved for Mercedes-Benz. • Insect remains: soak with insect remover and rinse off the treated areas afterwards. • Bird droppings: soak with water and rinse off afterwards. • To prevent water stains, dry a foil-wrapped vehicle with a soft, absorbent cloth after every car wash.	• The service life and colouring of decorative foils are impaired by: - sunlight - temperature, e.g. hot air blower - weather conditions - stone chippings and dirt - chemical cleaning agents - oily products • Do not use polish on matt decorative foil. Polishing will have the effect of shining the foil-wrapped surface. • Do not treat matt or structured decorative foils with wax. Permanent stains may occur.

Scratches, corrosive deposits, areas affected by corrosion and damage caused by incorrect care cannot always be completely repaired. In such cases, visit a qualified specialist workshop.

You can obtain more information on care and cleaning products from the manufacturer.

In the case of foil-wrapped surfaces, optical differences may occur between the surfaces that were not protected by a decorative foil after removing a decorative foil.

ⓘ Have work or repairs to decorative foils carried out at a qualified specialist workshop, e.g. in a Mercedes-Benz Service Centre.

Notes on care of car parts

⚠ WARNING Risk of entrapment if the windscreen wipers are switched on while the windscreen is being cleaned

If the windscreen wipers are set in motion while you are cleaning the windscreen or wiper blades, you can be trapped by the wiper arm.

- Always switch off the windscreen wipers and the ignition before cleaning the windscreen or wiper blades.

⚠ WARNING Risk of burns from the tailpipe and tailpipe trims

The exhaust tailpipe and tailpipe trims can become very hot. If you come into contact with these parts of the vehicle, you could burn yourself.

- Always be particularly careful around the tailpipe and the tailpipe trims and supervise children especially closely in this area.
- Allow vehicle parts to cool down before touching them.

Observe the following information:

	Notes on cleaning and care	Avoiding vehicle damage
Wheels/rims	Use water and acid-free wheel cleaners.	• Do not use acidic wheel cleaners to remove brake dust. This could damage wheel bolts and brake components. • To avoid corrosion of the brake discs and brakepads, drive the vehicle for a few minutes after cleaning before parking it. The brake discs and brakepads warm up and dry out.
Windows	Clean windows inside and outside with a damp cloth and with a cleaning agent recommended for Mercedes-Benz.	Do not use dry cloths or abrasive or solvent-based cleaning agents to clean the inside of windows.
Wiper blades	Fold out the wiper blades and clean them using a damp cloth.	Do not clean the wiper blades too often.

	Notes on cleaning and care	Avoiding vehicle damage
Exterior lighting	Clean the lenses with a wet sponge and mild cleaning agent, e.g. car shampoo.	Only use cleaning agents or cleaning cloths that are suitable for plastic lenses.
Sensors	Clean the sensors in the front and rear bumper and in the radiator grille with a soft cloth and car shampoo.	When using a high-pressure cleaner, maintain a minimum distance of 30 cm.
Reversing camera and **360° Camera**	• Open the camera cover with the multimedia system (→ page 243) . • Use clean water and a soft cloth to clean the camera lens.	Do not use a high-pressure cleaner.
Tailpipes	Clean with a cleaning agent recommended for Mercedes-Benz, especially in the winter and after washing the vehicle.	Do not use acidic cleaning agents.
Trailer hitch	• Remove traces of rust on the ball, e.g. with a wire brush. • Remove dirt with a lint-free cloth. • After cleaning, oil or grease the ball head lightly. • Observe the notes on care in the trailer hitch manufacturer's operating instructions.	Do not clean the ball neck with a high-pressure cleaner or solvent.

Notes on care of the interior

WARNING Risk of injury from plastic parts breaking off after the use of solvent-based care products

Care and cleaning products containing solvents can cause surfaces in the cockpit to become porous.

When the airbags are deployed, plastic parts may break away.

- Do not use any care or cleaning products containing solvents to clean the cockpit.

WARNING Risk of injury or death from bleached seat belts

Bleaching or dyeing seat belts can severely weaken them.

This can, for example, cause seat belts to tear or fail in an accident.

- Never bleach or dye seat belts.

Observe the following information:

	Cleaning and care	Avoiding vehicle damage
Seat belts	Clean with lukewarm and soapy water.	• Do not use chemical cleaning agents. • Do not dry seat belts by heating them to over 80 °C or exposing them to direct sunlight.
Display	Clean the surface carefully with a microfibre cloth and a suitable display care product (TFT/LCD).	• Switch off the display and let it cool down. • Do not use any other agents.
Plastic trim	• Clean with a damp microfibre cloth. • For heavy soiling: use a care product recommended for Mercedes-Benz.	• Do not attach stickers, films or similar materials. • Do not allow cosmetics, insect repellent or sun cream to come in contact with the plastic trim.

	Cleaning and care	Avoiding vehicle damage
Real wood/trim elements	• Clean with a microfibre cloth. • Black piano-lacquer look: clean with a damp cloth and soapy water. • For heavy soiling: use a care product recommended for Mercedes-Benz.	Do not use solvent-based cleaning agents, polishes or waxes.
Roof lining	Clean with a brush or dry shampoo.	
Carpet	Use a carpet and textile cleaning agent recommended for Mercedes-Benz.	
Genuine leather seat covers	• Clean with a damp cloth and then wipe with a dry cloth. • Leather care: use a leather care agent that has been recommended for Mercedes-Benz.	• Do not allow the leather to become too damp. • Do not use a microfibre cloth.
DINAMICA seat covers	Clean with a damp cloth.	Do not use a microfibre cloth.
Imitation leather seat covers	Clean with a damp cloth and 1% soapy water.	Do not use a microfibre cloth.
Cloth seat covers	Clean with a damp microfibre cloth and 1% soapy water and allow to dry.	

Emergency

Removing the safety vest

The safety vests are located in the safety vest compartments in the driver's and front passenger door stowage compartments.

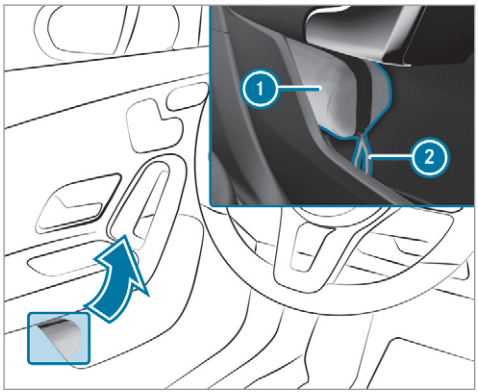

▶ **To remove:** pull out safety vest bag (1) by loop (2).

▶ Open safety vest bag (1) and pull out the safety vest.

ⓘ There are also safety vest compartments in the rear door stowage compartments in which safety vests can be stored.

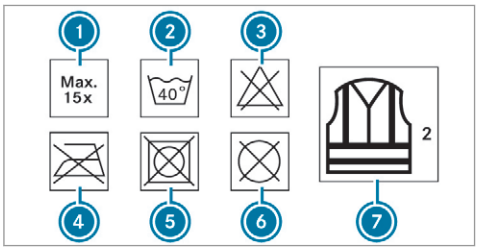

(1) Maximum number of washes
(2) Maximum wash temperature
(3) Do not bleach
(4) Do not iron
(5) Do not tumble dry
(6) Do not dry clean
(7) Class 2 safety vest

The requirements defined by the legal standard are only fulfilled if the safety vest is the correct size and is fully closed.

The safety vest must be replaced in the following situations:

- the reflective strips are damaged or dirty
- the maximum permissible number of washes is exceeded
- the fluorescence has faded

Warning triangle

Removing the warning triangle

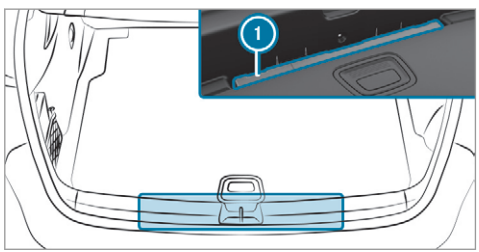

▶ Remove warning triangle 1.

Setting up the warning triangle

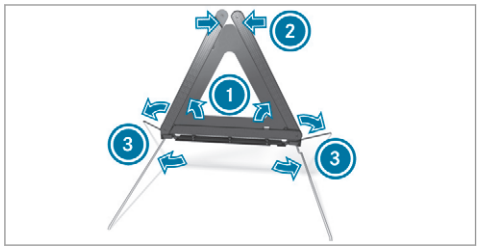

▶ Fold side reflectors 1 upwards to form a triangle and attach at the top using upper press-stud 2.

▶ Fold legs 3 down and out to the side.

First-aid kit (soft-sided) overview

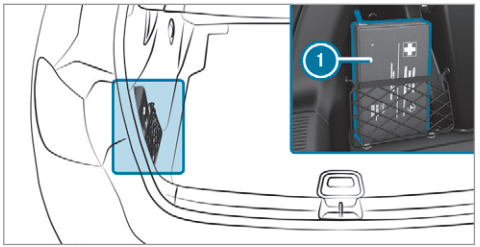

First-aid kit (soft sided) 1 is in the load compartment in the left-hand stowage net.

ⓘ Depending on the vehicle's equipment, the first-aid kit (soft-sided) is in the recess in the side trim.

Removing the fire extinguisher

⚠ **WARNING** Risk of accident due to an incorrectly secured fire extinguisher in the driver's footwell

A fire extinguisher in the driver's footwell may impede pedal travel or block a depressed pedal.

This jeopardises the operating and road safety of the vehicle.

Moreover, the fire extinguisher can be thrown about in the driver's footwell and injure the driver or other vehicle occupants.

▶ Always store and secure the fire extinguisher in the bracket.

▶ Do not remove the fire extinguisher while driving.

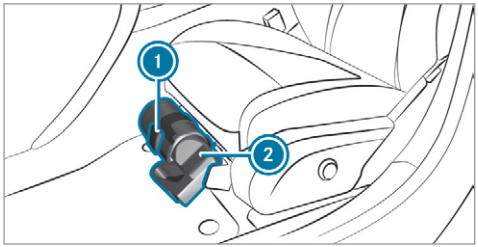

- **Left-hand drive vehicle:** pull tab (1) upwards.
- Remove fire extinguisher (2).

Flat tyre

Notes on flat tyres

WARNING Risk of accident due to a flat tyre

A flat tyre severely affects the driving characteristics as well as the steering and braking of the vehicle.

Tyres without run-flat characteristics:

- Do not drive on with a flat tyre.
- Change the flat tyre immediately with an emergency spare wheel or spare wheel. Alternatively, consult a qualified specialist workshop.

Tyres with run-flat characteristics:

- Observe the information and warning notes on MOExtended tyres (run-flat tyres).

In the event of a flat tyre, the following options are available depending on your vehicle's equipment:

- **Vehicles with MOExtended tyres:** it is possible to continue the journey for a short period of time. Make sure you observe the notes on MOExtended tyres (run-flat tyres) (→ page 473).
- **Vehicles with a TIREFIT kit:** you can repair the tyre so that it is possible to continue the journey for a short period of time. To do this, use the TIREFIT kit (→ page 475).
- **Vehicles with Mercedes me connect:** you can make a call for breakdown assistance via the overhead control panel in the case of a breakdown (→ page 421).
- **All vehicles:** change the wheel (→ page 508).

ⓘ The emergency spare wheel is only available in certain countries.

Notes on MOExtended tyres (run-flat tyres)

WARNING Risk of accident when driving in emergency mode

When driving in emergency mode, the handling characteristics are impaired. e.g. when cornering, when accelerating strongly and when braking.

- Do not exceed the permissible maximum speed.
- Avoid any abrupt steering and driving maneuvers as well as driving over obstacles (curbs, pot holes, off-road).

This applies, in particular, to a loaded vehicle.

▶ Stop driving in the emergency mode if you notice:

- banging noise
- vehicle vibration
- smoke which smells like rubber
- continuous ESP® intervention
- cracks in tire side walls

▶ After driving in emergency mode have the rims checked by a qualified specialist workshop with regard to their further use.

▶ The defective tire must be replaced in every case.

With MOExtended tyres (run-flat tyres), you can continue to drive your vehicle even if there is a total loss of pressure in one or more tyres. However, the tyre affected must not show any clearly visible damage.

You can recognise MOExtended tyres by the MOExtended marking which appears on the side wall of the tyre.

Vehicles with tyre pressure loss warning system: MOExtended tyres may only be used in conjunction with an activated tyre pressure loss warning system.

Vehicles with tyre pressure monitoring system: MOExtended tyres may only be used in conjunction with an activated tyre pressure monitoring system.

If a pressure loss warning message appears in the multifunction display, proceed as follows:

- Check the tyre for damage.
- If driving on, observe the following notes.

Driving distance possible in emergency mode after the pressure loss warning:

Load condition	Driving distance possible in emergency mode
Partially laden	80 km
Fully laden	30 km

The driving distance possible in emergency mode may vary depending on the driving style. Observe the maximum permissible speed of 80 km/h.

If a tyre has gone flat and cannot be replaced with an MOExtended tyre, you can use a standard tyre as a temporary measure.

TIREFIT kit storage location

The TIREFIT kit is located under the load compartment floor.

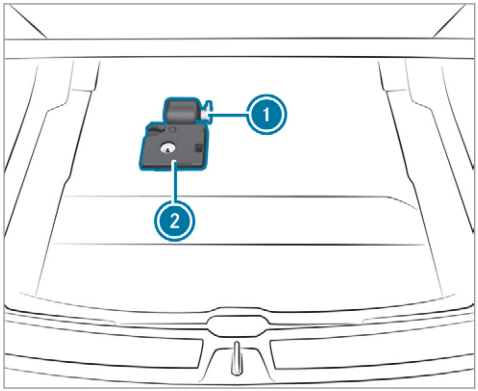

1 Tyre sealant bottle
2 Tyre inflation compressor

ⓘ You can find information on the power category (LK) and/or electrical data on the back of the tyre inflation compressor:

- LK2 – 12 V/15 A, 180 W, 0.8 kg

At a distance of approximately 1 m to the tyre inflation compressor and approximately 1.6 m above the ground, the following sound pressure levels apply:

- Emission sound pressure level L_{PA} 83 dB (A)
- Sound power level L_{WA} 91 dB (A)

The tyre inflation compressor is maintenance-free. If there is a malfunction, please contact a qualified specialist workshop.

Using the TIREFIT kit

Requirements:

- Tyre sealant bottle and tyre inflation compressor (→ page 474).
- TIREFIT sticker
- Gloves (depending on the vehicle equipment)

You can use TIREFIT tyre sealant to seal perforation damage of up to 4 mm, particularly those in the tyre contact surface. You can use TIREFIT in outside temperatures down to -20 °C.

⚠ WARNING Risk of accident when using tyre sealant

In the following situations in particular, the tyre sealant is unable to provide sufficient breakdown assistance, as it is unable to seal the tyre properly:

- there are cuts or punctures in the tyre larger than those previously mentioned.
- the wheel rim is damaged.
- you have driven at very low tyre pressures or on a flat tyre.

▶ Do not drive on.
▶ Consult a qualified specialist workshop.

⚠ WARNING Risk of injury and poisoning from tyre sealant

Tyre sealant is hazardous to health and causes irritation. Do not allow it to come into contact with your skin, eyes or clothing, and do not swallow it. Do not inhale any vapours. Keep the tyre sealant away from children.

Observe the following if you come into contact with the tyre sealant:

- Rinse off the tyre sealant from your skin using water immediately.
- If tyre sealant gets into your eyes, thoroughly rinse them using clean water immediately.
- If tyre sealant has been swallowed, thoroughly rinse out your mouth immediately and drink plenty of water. Do not induce vomiting and seek medical attention immediately.
- Change out of clothing which has come into contact with tyre sealant immediately.
- If an allergic reaction occurs, seek medical attention immediately.

! **NOTE** Overheating due to the tyre inflation compressor running too long

- Do not run the tyre inflation compressor for longer than ten minutes without interruption.

Comply with the manufacturer's safety notes on the sticker on the tyre inflation compressor.

Have the tyre sealant bottle replaced in a qualified specialist workshop every five years.

- Do not remove any foreign objects which have entered the tyre.

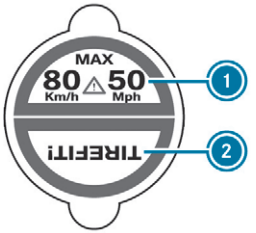

- Affix part (1) of the TIREFIT sticker to the instrument cluster within the driver's field of vision.
- Affix part (2) of the TIREFIT sticker near the valve on the wheel with the defective tyre.

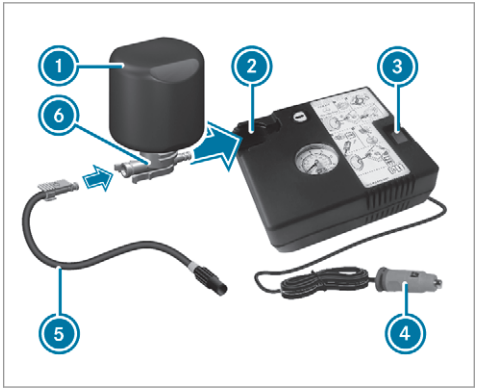

- Pull plug (4) with the cable and hose (5) out of the tyre inflation compressor housing.
- Push the plug of hose (5) into flange (6) of tyre sealant bottle (1) until the plug engages.
- Place tyre sealant bottle (1) head downwards into recess (2) of the tyre inflation compressor.

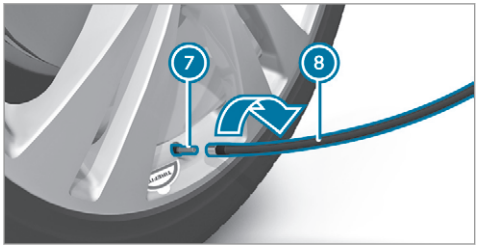

- Remove the valve cap from valve (7) on the faulty tyre.
- Screw filling hose (8) onto valve (7).
- Insert plug (4) into a 12 V socket in your vehicle.
- Switch on the ignition.
- Press on and off switch (3) on the tyre inflation compressor.
  The tyre inflation compressor is switched on. The tyre is inflated. First, tyre sealant is pumped into the tyre. The pressure may briefly rise to approximately 500 kPa (5 bar/73 psi).

Do not switch off the tyre inflation compressor during this phase!

- Let the tyre inflation compressor run for a maximum of ten minutes.
  The tyre should then have attained a tyre pressure of at least 200 kPa (2.0 bar/29 psi).

If tyre sealant leaks out, make sure you clean the affected area as quickly as possible. It is preferable to use clean water.

If you get tyre sealant on your clothing, have it cleaned as soon as possible with perchloroethylene.

If, after ten minutes, a tyre pressure of 200 kPa (2.0 bar/29 psi) has not been attained:

- Switch off the tyre inflation compressor.
- Unscrew the filling hose from the valve of the defective tyre.

Please note that tyre sealant may leak out when unscrewing the filling hose.

- Drive forwards or reverse very slowly for approximately 10 m.
- Pump up the tyre again.
  After a maximum of ten minutes the tyre pressure must be at least 200 kPa (2.0 bar/29 psi).

⚠ **WARNING** Risk of accident due to the specified tyre pressure not being achieved

If the specified tyre pressure is not achieved after the specified time, the tyre is too badly damaged. The tyre sealant cannot repair the tyre in this instance.

Damaged tyres and a tyre pressure that is too low can significantly impair braking and handling characteristics.

- Do not drive on.
- Consult a qualified specialist workshop.

If, after ten minutes, a tyre pressure of 200 kPa (2.0 bar/29 psi) has been attained:

- Switch off the tyre inflation compressor.

- Unscrew the filling hose from the valve of the defective tyre.

WARNING Risk of accident from driving with sealed tyres

A tyre temporarily sealed with tyre sealant impairs driving characteristics and is not suitable for higher speeds.

- Adapt your driving style accordingly and drive carefully.
- Do not exceed the maximum speed limit with a tyre that has been repaired using tyre sealant.

- Observe the maximum permissible speed for a tyre sealed with tyre sealant 80 km/h.
- Affix the upper section of the TIREFIT sticker to the instrument cluster in a location where it will be easily seen by the driver.

NOTE Staining from leaking tyre sealant

After use, excess tyre sealant may leak out from the filling hose.

- Therefore, place the filling hose in the plastic bag that contained the TIREFIT kit.

ENVIRONMENTAL NOTE Environmental pollution caused by environmentally irresponsible disposal

Tyre sealant contains pollutants.

- Have the tyre sealant bottle disposed of professionally, e.g. at a Mercedes-Benz Service Centre.

- Stow the tyre sealant bottle, the tyre inflation compressor and the warning triangle.
- Pull away immediately.
- Stop driving after approximately ten minutes and check the tyre pressure using the tyre inflation compressor.
  The tyre pressure must now be at least 130 kPa (1.3 bar/19 psi).

WARNING Risk of accident due to the specified tyre pressure not being achieved

If the specified tyre pressure is not achieved after a brief drive, the tyre is too badly damaged. The tyre sealant cannot repair the tyre in this instance.

Damaged tyres and a tyre pressure that is too low can significantly impair braking and handling characteristics.

- Do not drive on.
- Consult a qualified specialist workshop.

Countries that have Mercedes-Benz Service24h: you will find a sticker with the telephone number, e.g. on the B-pillar on the driver's side.

- Correct the tyre pressure if it is still at least 130 kPa (1.3 bar/19 psi). See the tyre pressure table on the fuel filler flap for values.
- **To increase the tyre pressure:** switch on the tyre inflation compressor.

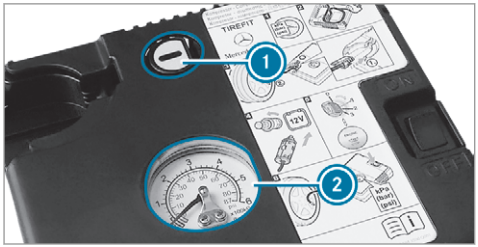

- **To reduce the tyre pressure:** press pressure release button (1) next to manometer (2).
- When the tyre pressure is correct, unscrew the filling hose from the valve of the sealed tyre.
- Screw the valve cap onto the valve of the sealed tyre.
- Pull the tyre sealant bottle out of the tyre inflation compressor.
  The filling hose stays on the tyre sealant bottle.
- Drive to the nearest qualified specialist workshop and have the tyre, tyre sealant bottle and filling hose replaced there.

Battery (vehicle)

Notes on the 12 V battery

Plug-in hybrid: make sure that you read the separate Owner's Manual. You could otherwise fail to recognise dangers, e.g. due to high voltage.

⚠ **WARNING** Risk of an accident due to work carried out incorrectly on the battery

Work carried out incorrectly on the battery can, for example, lead to a short circuit. This can lead to function restrictions in safety-relevant systems, e.g. the lighting system, ABS (anti-lock braking system) or ESP® (Electronic Stability Program). The operating safety of your vehicle may be restricted.

You could lose control of the vehicle in the following situations:

- when braking
- in the event of abrupt steering manoeuvres and/or when the vehicle's speed is not adapted to the road conditions

- In the event of a short circuit or a similar incident, contact a qualified specialist workshop immediately.
- Do not continue driving.
- Always have work on the battery carried out at a qualified specialist workshop.

- Further information on ABS (→ page 202)
- Further information on ESP® (→ page 202)

For safety reasons, Mercedes-Benz recommends that you only use batteries which have been tested and approved for your vehicle by Mercedes-Benz. These batteries provide increased impact protection to prevent vehicle occupants from suffering acid burns should the battery be damaged in the event of an accident.

WARNING Risk of explosion due to electrostatic charge

Electrostatic charge can cause sparks which may ignite the highly flammable gas mixture in the battery.

- To discharge any electrostatic charge that may have built up, touch the metal vehicle body before handling the battery.

The highly flammable gas mixture is created while the battery is charging and during starting assistance.

WARNING Danger of chemical burns from the battery acid

Battery acid is caustic.

- Avoid contact with the skin, eyes or clothing.
- Do not lean over the battery.
- Do not inhale battery gases.
- Keep children away from the battery.
- Immediately rinse battery acid off thoroughly with plenty of clean water and seek medical attention immediately.

ENVIRONMENTAL NOTE Environmental damage due to improper disposal of batteries



Batteries contain pollutants. It is illegal to dispose of them with the household rubbish.

- 

  Dispose of batteries in an environmentally responsible manner. Take discharged batteries to a qualified specialist workshop or to a collection point for used batteries.

If you have to disconnect the 12 V battery, contact a qualified specialist workshop.

Comply with safety notes and take protective measures when handling batteries.



Risk of explosion.



Fire, naked flames and smoking are prohibited when handling the battery. Avoid creating sparks.



Electrolyte or battery acid is corrosive. Avoid contact with the skin, eyes or clothing. Wear suitable protective clothing, in particular gloves, an apron and a face mask. Immediately rinse electrolyte or acid splashes off with clean water. Consult a doctor if necessary.



Wear safety glasses.



Keep children away.



Observe this Owner's Manual.

If you do not intend to use the vehicle over an extended period of time:

- activate standby mode, or
- connect the battery to a battery charger approved by Mercedes-Benz, or
- consult a qualified specialist workshop to disconnect the battery

Notes on starting assistance and on charging the 12 V battery

When charging the battery and during starting assistance, always use the jump-start connection point in the engine compartment.

NOTE Damaging the battery through overvoltage

When using a battery charger without a maximum charging voltage, the battery or the vehicle electronics may be damaged.

- Only use battery chargers with a maximum charging voltage of 14.8 V.

WARNING Risk of explosion from hydrogen gas igniting

A battery generates hydrogen gas during the charging process. If there is a short circuit or sparks start to form, there is a danger of the hydrogen gas igniting.

- Make sure that the positive terminal of the connected battery does not come into contact with vehicle parts.
- Never place metal objects or tools on a battery.
- When connecting and disconnecting the battery, you must observe the described order for the battery clamps.
- When giving starting assistance, always make sure that you only connect battery terminals with identical polarity.
- During starting assistance, you must observe the described order for connecting and disconnecting the jump lead.
- Do not connect or disconnect the battery clamps while the engine is running.

WARNING Risk of explosion during charging process and starting assistance

During the charging process and starting assistance, the battery may release an explosive gas mixture.

- Avoid fire, naked flames, creating sparks and smoking.
- Make sure that there is sufficient ventilation during the charging process and during starting assistance.
- Do not lean over a battery.

WARNING Risk of explosion from a frozen battery

A discharged battery may freeze at temperatures slightly above or below freezing point.

During starting assistance or battery charging, battery gas can be released.

- Always allow a battery to thaw before charging it or performing starting assistance.

If the indicator/warning lamps in the instrument cluster do not light up at low temperatures, it is very likely that the discharged battery has frozen. In this case you may neither jump-start the vehicle nor charge the battery.

The service life of a battery that has been thawed may be dramatically shortened. The starting characteristics may be impaired, especially at low temperatures.

It is recommended that you have a thawed battery checked at a qualified specialist workshop.

Plug-in hybrid: observe the notes in the Supplement. Otherwise, you may fail to recognise dangers.

NOTE Damage caused by numerous or extended attempts to start the engine

Numerous or extended attempts to start the engine may damage the catalytic converter due to non-combusted fuel.

- Avoid numerous and extended attempts to start the engine.

Observe the following points during starting assistance and when charging the battery:

- Only use undamaged jump lead/charging cables with a sufficient cross-section and insulated terminal clamps.
- Non-insulated parts of the terminal clamps must not come into contact with other metal parts while the jump lead/charging cable is connected to the battery/jump-start connection point.
- The jump lead/charging cable must not come into contact with any parts which may move when the engine is running.
- Always make sure that neither you nor the battery is electrostatically charged.
- Keep away from fire and naked flames.
- Do not lean over the battery.

Observe the additional following points when charging the battery:

- Only use battery chargers tested and approved for Mercedes-Benz.
- Read the battery charger's operating instructions before charging the battery.

Observe the additional following points during starting assistance:

- For starting assistance, only use batteries with a nominal voltage of 12 V.
- The vehicles must not touch.
- **Petrol engine:** only accept starting assistance if the engine and exhaust system are cold.

Starting assistance and charging the 12 V battery

Requirements:

Plug-in hybrid: observe the notes in the Supplement. Otherwise, you may fail to recognise dangers.

- The vehicle is secured with the electric parking brake.
- **Automatic transmission:** the transmission is in position P.
- **Manual transmission:** the transmission is in neutral.
- The ignition and all electrical consumers are switched off.
- The bonnet is open.

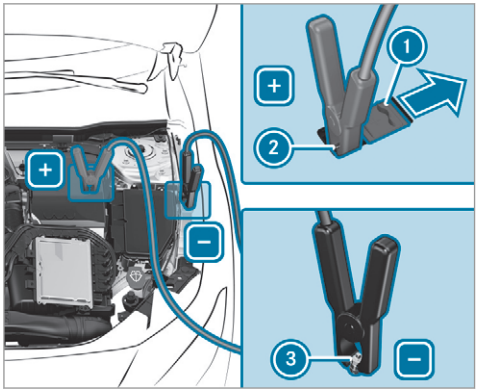

- Slide cover 1 of positive clamp 2 on the jump-starting connection point in the direction of the arrow.
- Connect positive clamp 2 on your vehicle to the positive pole of the donor battery using the jump lead/charging cable. Always begin with positive clamp 2 on your own vehicle first.
- **During starting assistance:** start the engine of the donor vehicle and run at idle speed.
- Connect the negative pole of the donor battery and earth point 3 of your own vehicle by using the jump lead/charging cable. Begin with the donor battery first.
- **During starting assistance:** start the engine of your own vehicle.
- **During the charging process:** start the charging process.
- **During starting assistance:** let the engines run for several minutes.
- **During starting assistance:** before disconnecting the jump lead, switch on an electrical consumer in your own vehicle, e.g. the rear window heater or lighting.

When the starting assistance/charging process is complete:

- First, remove the jump lead/charging cable from earth point 3 and the negative pole of the donor battery, then from positive clamp 2 and the positive pole of the donor bat-

tery. Begin each time with the contacts on your own vehicle first.

▶ After removing the jump lead/charging cable, close cover (1) of positive clamp (2).

Further information can be obtained at a qualified specialist workshop.

Replacing the 12 V battery

▶ Observe the notes on the 12 V battery (→ page 479).

Mercedes-Benz recommends that you have the 12 V battery replaced at a qualified specialist workshop, e.g. at a Mercedes-Benz Service Centre.

Observe the following notes if you want to replace the battery yourself:

- Always replace a faulty battery with a battery which meets the specific vehicle requirements.

  The vehicle is equipped with an AGM technology battery (Absorbent Glass Mat). Full vehicle functionality is only guaranteed with an AGM battery. For safety reasons, Mercedes-Benz recommends that you only use batteries which have been tested and approved for your vehicle by Mercedes-Benz.
- Carry over detachable parts, such as vent hoses, elbow fittings or terminal covers from the battery being replaced.
- Make sure that the vent hose is always connected to the original opening on the side of the battery.

  Fit any existing or supplied cell caps.

  Otherwise, gases or battery acid could escape.
- Make sure that detachable parts are reconnected in the same way.

Tow-starting or towing away

Permitted towing methods

Plug-in hybrid: be sure to observe the notes in the Supplement. Otherwise, you may fail to recognise dangers.

Mercedes-Benz recommends transporting your vehicle in the case of a breakdown, rather than towing it away.

For towing, use a tow rope or tow bar with both axles on the ground. Do not use tow bar systems.

⚠ WARNING Risk of accident when towing with steering wheel lock

You will no longer be able to steer the vehicle if the steering wheel lock is engaged.

▶ Always switch on the ignition when towing the vehicle with a tow cable or a tow bar.

! NOTE Damage to the vehicle due to towing away incorrectly

▶ Observe the instructions and notes on towing away.

Permitted towing methods

Vehicle equipment/towing method	 Both axles on the ground	 Front axle raised	 Rear axle raised
Vehicles with manual transmission	Yes, maximum 50 km at 50 km/h	Yes, maximum 50 km at 50 km/h	Yes, maximum 50 km at 50 km/h
Vehicles with automatic transmission	Yes, maximum 50 km at 50 km/h	Yes, maximum 50 km at 50 km/h	Yes, maximum 50 km at 50 km/h
4MATIC vehicles	Yes, maximum 50 km at 50 km/h	No	No

Towing with a raised axle: towing should be performed by a towing company.

Towing the vehicle with both axles on the ground

- ▶ Observe the notes on the permitted towing methods (⟶ page 484).
- ▶ Make sure that the battery is connected and charged.

Observe the following points when the battery is discharged:

- the engine cannot be started
- the electric parking brake cannot be released or applied
- **vehicles with automatic transmission:** the automatic transmission cannot be shifted to position N or P.

ⓘ **Vehicles with automatic transmission:** if the automatic transmission cannot be shifted to position N, or the multifunction display in the instrument cluster does not show anything, have the vehicle transported away (⟶ page 487). A towing vehicle with lifting equipment is required for vehicle transportation.

NOTE Damage due to towing away at excessively high speeds or over long distances

The drivetrain could be damaged when towing at excessively high speeds or over long distances.

- A towing speed of 50 km/h must not be exceeded.
- A towing distance of 50 km must not be exceeded.

WARNING Risk of accident when towing a vehicle which is too heavy

If the vehicle being tow-started or towed away is heavier than the permissible gross mass, the following situations can occur:

- the towing eye may become detached.
- the car/trailer combination may swerve or even overturn.

- If another vehicle is tow-started or towed away, its weight must not exceed the permissible gross mass of your own vehicle.

If a vehicle must be tow-started or towed away, its permissible gross weight must not exceed the permissible gross weight of the towing vehicle.

- Information on the permissible gross weight of the vehicle can be found on the vehicle identification plate (→ page 521).
- **Vehicles with automatic transmission:** do not open the driver's door or front passenger door, otherwise the automatic transmission automatically shifts to position P.
- Fit the towing eye (→ page 489).
- Fasten the tow bar.

NOTE Damage due to incorrect connection of the tow bar

- Only connect the tow rope or tow bar to the towing eyes.

- Deactivate the automatic locking mechanism (→ page 86).
- Do not activate the HOLD function.
- Deactivate tow-away protection (→ page 100).
- Deactivate Active Brake Assist (→ page 212).
- **Vehicles with automatic transmission:** shift the automatic transmission to position N.
- **Vehicles with manual transmission:** shift to neutral N.
- Release the electric parking brake.
- Switch on the ignition, otherwise the steering wheel locking may engage.

WARNING Risk of accident due to limited safety-related functions during the towing process

Safety-related functions are limited or no longer available in the following situations:

- the ignition is switched off.
- the brake system or power steering system is malfunctioning.

- the energy supply or the on-board electrical system is malfunctioning.

When your vehicle is then towed away, significantly more effort may be required to steer and brake than is normally required.

- Use a tow bar.
- Make sure that the steering wheel can move freely, before towing the vehicle away.

! NOTE Damage due to excessive tractive power

If you pull away sharply, the tractive power may be too high and the vehicles could be damaged.

- Pull away slowly and smoothly.

Loading the vehicle for transport

- Observe the notes on towing away (→ page 485).
- Connect the tow bar to the towing eye in order to load the vehicle.

ⓘ You can also attach the tow bar to the trailer hitch.

- **Vehicles with automatic transmission:** shift the automatic transmission to position N.

ⓘ **Vehicles with automatic transmission:** the automatic transmission may be locked in position P in the event of damage to the electrical system. To shift to N, provide the on-board electrical system with power (→ page 483).

- **Vehicles with manual transmission:** shift to neutral.
- Load the vehicle onto the transporter.
- **Vehicles with automatic transmission:** shift the automatic transmission to position P.
- **Vehicles with manual transmission:** engage first or reverse gear.
- Use the electric parking brake to secure the vehicle against rolling away.
- Only secure the vehicle by the wheels.

Vehicles with ADS PLUS (Adaptive Damping System PLUS)

⚠ WARNING Risk of an accident when transporting vehicles with Adaptive Damping System PLUS

The reduced damping forces on the vehicle being transported can cause the vehicle/trailer combination to start to swing.

As a result, when transporting vehicles with the Adaptive Damping System PLUS, the vehicle/trailer combination may start to skid. Consequently, you could lose control of your vehicle.

- When transporting, ensure that:
  - the vehicle has been loaded onto the transporter correctly
  - the vehicle is secured at all four wheels with suitable tensioning straps

- the maximum permissible speed of 60 km/h is not exceeded when transporting

! **NOTE** Damage to the vehicle from securing it incorrectly

- After loading, the vehicle must be secured on all four wheels. Otherwise, the vehicle could be damaged.
- A minimum distance of 20 cm upwards and 10 cm downwards must be kept to the transport platform.

▶ Secure the vehicle on all four wheels after loading.

4MATIC vehicles/vehicles with automatic transmission

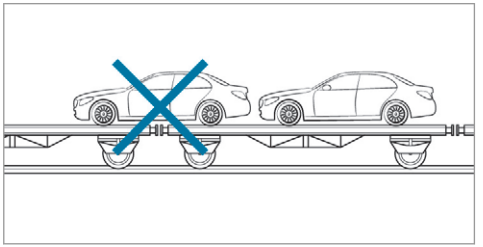

▶ Make sure that the front and rear axles come to rest on the same transportation vehicle.

! **NOTE** Damage to the drivetrain due to incorrect positioning

- Do not position the vehicle above the connection point of the transport vehicle.

Towing eye storage location

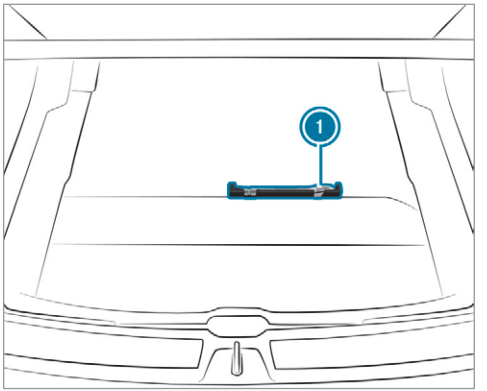

Towing eye (1) is under the load compartment floor.

Installing the towing eye

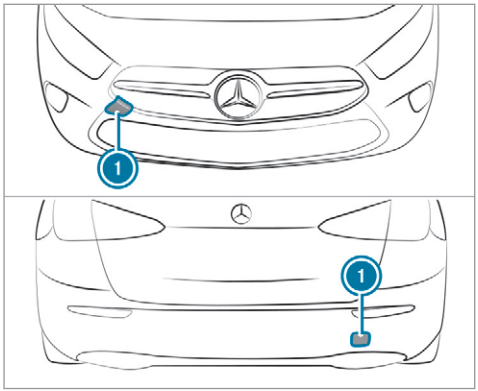

- Press the mark on cover (1) inwards and remove.
- Screw in the towing eye clockwise as far as it will go and tighten.

Vehicles with a trailer hitch: vehicles with a trailer hitch do not have a rear bracket for the towing eye. Fasten the tow bar to the trailer hitch.

ⓘ Make sure that cover (1) engages in the bumper when you remove the towing eye.

! NOTE Damage to the vehicle due to incorrect use of the towing eye

When a towing eye is used to recover a vehicle, the vehicle may be damaged in the process.

- Only use the towing eye to tow away or tow start the vehicle.

Tow starting the vehicle (emergency engine start)

Vehicles with automatic transmission

! NOTE Damage to the automatic transmission due to tow-starting

The automatic transmission may be damaged in the process of tow-starting vehicles with automatic transmission.

- Vehicles with automatic transmission must not be tow-started.

- Vehicles with automatic transmission must not be tow-started.

Vehicles with manual transmission

- Observe the notes on towing away (→ page 485).
- If necessary, allow the engine and exhaust system to cool down.
- Switch the ignition on.
- Engage second gear.
- Release the electric parking brake.
- Tow-start the vehicle while the clutch pedal is fully depressed.
- Slowly release the clutch pedal.
- Immediately shift to neutral if the engine starts.
- Pull over and stop the vehicle, paying attention to road and traffic conditions.
- Remove the tow bar.

- ▶ Remove the towing eye.
- ▶ Have the vehicle checked at a qualified specialist workshop.

Electrical fuses

Notes on electrical fuses

⚠ WARNING Risk of accident and injury due to overloaded lines

If you manipulate or bridge a faulty fuse or if you replace it with a fuse with a higher amperage, the electric line could be overloaded.

This could result in a fire.

- ▶ Always replace faulty fuses with specified new fuses containing the correct amperage.

! NOTE Damage due to incorrect fuses

Electrical components or systems may be damaged by incorrect fuses, or their functionality may be significantly impaired.

- ▶ Only use fuses that have been approved by Mercedes-Benz and which have the correct fuse rating.

Blown fuses must be replaced with fuses of the same rating, which you can recognise by the colour and fuse rating. The fuse ratings and further information to be observed can be found in the fuse assignment diagram.

Fuse assignment diagram: on the fuse box in the engine compartment (→ page 490).

! NOTE Damage or malfunctions caused by moisture

Moisture may cause damage to the electrical system or cause it to malfunction.

- ▶ When the fuse box is open, make sure that no moisture can enter the fuse box.
- ▶ When closing the fuse box, make sure that the seal of the lid is positioned correctly on the fuse box.

If the newly inserted fuse also blows, have the cause traced and rectified at a qualified specialist workshop.

Ensure the following before replacing a fuse:

- The vehicle is secured against rolling away.
- All electrical consumers are switched off.
- The ignition is switched off.

The electrical fuses are located in various fuse boxes:

- Fuse box in the engine compartment on the left-hand side of the vehicle, when viewed in the direction of travel (→ page 490)
- Fuse box in the front passenger footwell (→ page 491)
- Fuse box in the centre of the load compartment (→ page 492)

Opening and closing the fuse box in the engine compartment

Requirements:

- A dry cloth and a screwdriver are available.

Observe the notes on electrical fuses (→ page 490).

Opening

WARNING Risk of injury from using the windscreen wipers while the engine bonnet is open

When the engine bonnet is open, and the windscreen wipers are set in motion, you can be trapped by the wiper linkage.

- Always switch off the windscreen wipers and ignition before opening the engine bonnet.

- Open the bonnet.

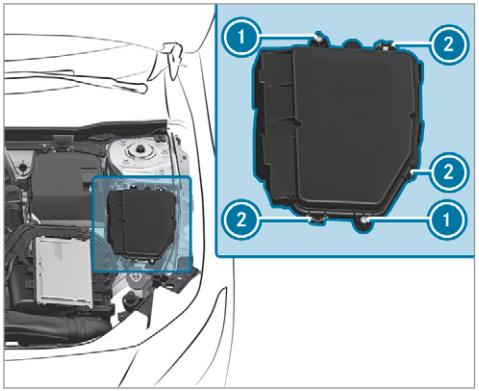

- Remove any existing moisture from the fuse box using a dry cloth.
- Loosen screws (1).
- Press clamps (2) and lift the fuse box lid up and out.

The fuse allocation chart is in a recess on the side of the fuse box.

Closing

- Check whether the seal is positioned correctly in the lid.
- Place the lid on the fuse box.
- Make sure that clamps (2) engage.
- Tighten screws (1).
- Close the bonnet.

Opening and closing the fuse box in the front passenger footwell

Observe the notes on electrical fuses (→ page 490).

Opening

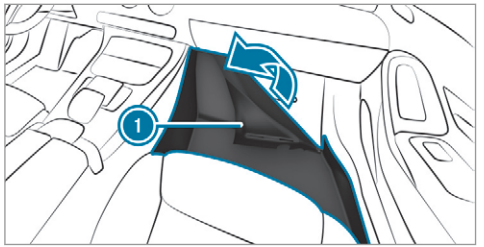

▶ Lift carpet (1) in the direction of the arrow.

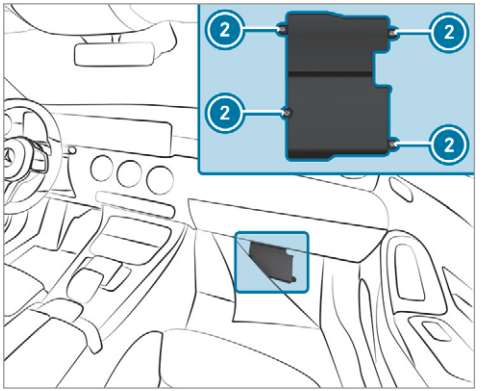

▶ Loosen screws (2) and remove the fuse box lid from the top.

Closing

▶ Place the lid on the fuse box.

▶ Tighten screws (2).

▶ Fold back the carpet.

Opening and closing the fuse box in the load compartment

Observe the notes on electrical fuses (→ page 490).

▶ Open the load compartment floor (→ page 121).

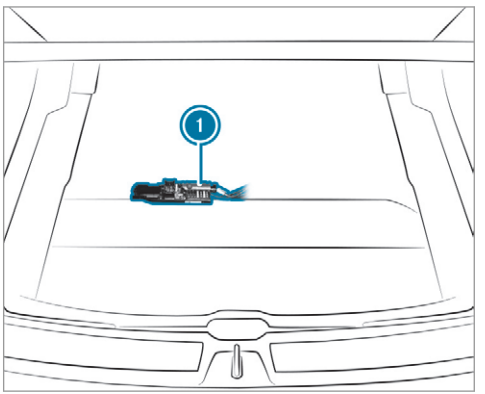

Fuse box (1) is located underneath the load compartment floor.

Notes on noise or unusual handling characteristics

While driving, pay attention to vibrations, noises and unusual handling characteristics, e.g. pulling to one side. This may indicate that the wheels or tyres are damaged. If you suspect that a tyre is defective, reduce your speed immediately. Stop the vehicle as soon as possible to check the wheels and tyres for damage. Hidden tyre damage could also be causing the unusual handling characteristics. If you find no signs of damage, have the tyres and wheels checked at a qualified specialist workshop.

Notes on regularly inspecting wheels and tyres

⚠ **WARNING** Risk of accident from damaged tyres

Damaged tyres can cause tyre pressure loss.

As a result, you could lose control of your vehicle.

▶ Check the tyres regularly for signs of damage and replace any damaged tyres immediately.

⚠ **WARNING** Risk of aquaplaning due to insufficient tyre tread

Insufficient tyre tread will result in reduced tyre grip. The tyre tread is no longer able to dissipate water.

This means that in heavy rain or slush the risk of aquaplaning is increased, in particular where speed is not adapted to suit the conditions.

If the tyre pressure is too high or too low, tyres may exhibit different levels of wear at different locations on the tyre tread.

▶ Thus, you should regularly check the tread depth and the condition of the tread across the entire width of all tyres.

Minimum tread depth for:

- Summer tyres: 3 mm
- M+S tyres: 4 mm

▶ For safety reasons, replace the tyres before the legally prescribed limit for the minimum tread depth is reached.

Carry out the following checks on all wheels regularly, at least once a month or as required, e.g. prior to a long journey or driving off-road:

- Check the tyre pressure (→ page 494).
- Visually inspect wheels and tyres for damage.
- Check the valve caps.

  The valves must be protected against moisture and dirt by the valve caps approved especially for your vehicle by Mercedes-Benz.
- Visual check of the tyre tread depth and the tyre contact surface across the entire width.

  The minimum tread depth for summer tyres is 3 mm and for winter tyres 4 mm.

Notes on snow chains

WARNING Risk of accident due to incorrect snow chain fitting

If you fit snow chains to the rear wheels, the snow chains may grind against the vehicle body or chassis components.

This could cause damage to the vehicle or the tyres.

- Never fit snow chains to the rear wheels.
- Always fit snow chains to the front wheels in pairs.

NOTE Damage to components of the vehicle body or chassis due to fitted snow chains

If you fit snow chains to the front wheels of 4MATIC vehicles, you may damage components of the vehicle body or chassis.

- Only fit snow chains to the rear wheels of 4MATIC vehicles.

NOTE Damage to the wheel trim from fitted snow chains

If snow chains are fitted to steel wheels, the wheel trims can be damaged.

- Remove the wheel trims of steel wheels before fitting snow chains.

Observe the following notes when using snow chains:

- Snow chains are only permissible for certain wheel/tyre combinations. You can obtain information about this from a Mercedes-Benz Service Centre.
- For safety reasons, only use snow chains that have been specifically approved for your vehicle by Mercedes-Benz, or snow chains with the same quality standard.
- If snow chains are fitted, the maximum permissible speed is 50 km/h.
- **Vehicles with Active Parking Assist:** do not use Active Parking Assist when snow chains are fitted.

You can permanently limit the maximum vehicle speed for driving with winter tyres (→ page 216).

You can deactivate ESP® to pull away (→ page 205). This allows the wheels to spin, achieving an increased driving force.

Tyre pressure

Notes on tyre pressure

WARNING Risk of accident due to insufficient or excessive tyre pressure

Underinflated or overinflated tyres pose the following risks:

- The tyres may burst, especially as the load and vehicle speed increase.
- The tyres may wear excessively and/or unevenly, which may greatly impair tyre traction.
- The driving characteristics, as well as steering and braking, may be greatly impaired.

▶ Comply with the recommended tyre pressure and check the tyre pressure of all tyres including the spare wheel regularly:

- at least once a month
- when the load changes
- before embarking on a longer journey
- if operating conditions change, e.g. off-road driving

▶ Adjust the tyre pressure as necessary.

Tyre pressure which is too high or too low can:

- Shorten the service life of the tyres.
- Cause increased tyre damage.
- Adversely affect driving characteristics and thus driving safety, e.g. due to aquaplaning.

⚠ **WARNING** Risk of accident from repeated tyre pressure drop

If the tyre pressure drops repeatedly, the wheel, valve or tyre may be damaged.

Insufficient tyre pressure can cause the tyres to burst.

▶ Inspect the tyre for signs of foreign objects.

▶ Check whether the wheel or valve has a leak.

▶ If you are unable to rectify the damage, contact a qualified specialist workshop.

Information on the recommended tyre pressure for the vehicle's factory-fitted tyres can be found on the tyre pressure table on the inside of the fuel filler flap (→ page 495).

Use a suitable pressure gauge to check the tyre pressure. The outer appearance of a tyre does not permit any reliable conclusion about the tyre pressure.

Vehicles with a tyre pressure monitoring system: you can also check the tyre pressure using the on-board computer.

Only correct tyre pressures when the tyres are cold. Conditions for cold tyres:

- The vehicle has been parked with the tyres out of direct sunlight for at least three hours.
- The vehicle has travelled less than 1.6 km.

A rise in the tyre temperature of 10 °C increases the tyre pressure by approx. 10 kPa (0.1 bar/1.5 psi). Take this into account when checking the tyre pressure of warm tyres.

Trailer operation notes
Always inflate the rear axle tyres to the recommended tyre pressures on the tyre pressure table for increased load.

Tyre pressure table

The tyre pressure table is on the inside of the fuel filler flap.

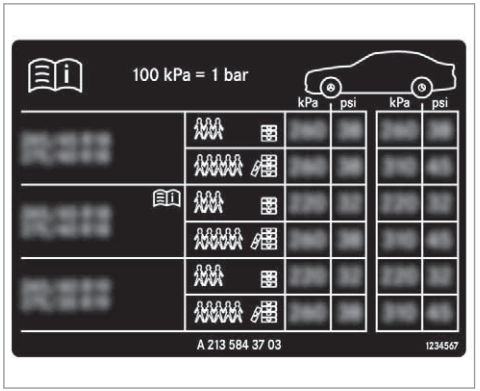

The tyre pressure table shows the recommended tyre pressure for all tyres approved for this vehicle. The recommended tyre pressures apply for cold tyres under various operating conditions, i.e. loading and/or speed of the vehicle.

If one or more tyre sizes precede a tyre pressure, the tyre pressure information following is only valid for those tyre sizes.

If the preceding tyre sizes are complemented by the symbol, the tyre pressure information following shows alternative tyre pressures. These tyre pressures may improve your vehicle's ride comfort. Fuel consumption may then increase slightly.

The load conditions "partially laden" and "fully laden" are defined in the table for different numbers of passengers and amounts of luggage. The actual number of seats may differ from this.

Be sure to also observe the following further related subjects:

- Notes on tyre pressure (→ page 494)

Tyre pressure monitoring system

Function of the tyre pressure monitoring system

The system checks the tyre pressure and the tyre temperature of the tyres fitted to the vehicle by means of a tyre pressure sensor.

New tyre pressure sensors, e.g. in winter tyres, are automatically taught-in during the first journey they are used.

The tyre pressure and the tyre temperature appear in the multifunction display (→ page 497).

If there is a substantial pressure loss or if the tyre temperature is excessive, you will be warned in the following ways:

- via display messages (→ page 583)
- via the warning lamp in the instrument cluster (→ page 607)

The tyre pressure monitoring system is only an aid. It is the driver's responsibility to set the tyre pressure to the recommended cold tyre pressure suitable for the operating situation. Set the tyre pressure for cold tyres using a tyre pressure gauge. Note that the correct tyre pressure for the current operating situation must first be taught-in to the tyre pressure monitoring system.

In most cases, the tyre pressure monitoring system will automatically update the new reference values after you have changed the tyre pressure. You can, however, also update the reference values by restarting the tyre pressure monitoring system manually (→ page 497).

System limits

The system may be impaired or may not function in the following situations:

- the tyre pressure has been set incorrectly
- there is a sudden pressure loss caused, for example, by a foreign object penetrating the tyre
- there is a malfunction caused by another radio signal source

Be sure to also pay attention to the following related topic:

- notes on tyre pressure (→ page 494)

Checking the tyre pressure with the tyre pressure monitoring system
Requirements:

- The ignition is switched on.

On-board computer:

Service ▸▸ Tyres

One of the following displays appears:

- Current tyre pressure and tyre temperature of the individual wheels:

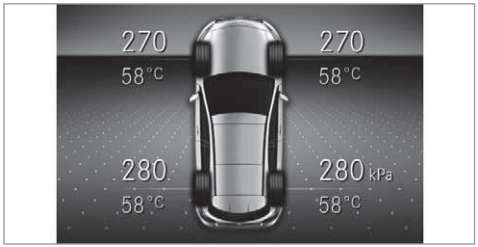

- Tyre pressures will be displayed after a few minutes of driving
- Tyre pressure monitor active: the teach-in process of the system is not yet complete. The tyre pressures are already being monitored.

▶ Compare the tyre pressure with the recommended tyre pressure for the current operating condition (→ page 495). Observe the notes on tyre temperature (→ page 494).

ⓘ The values displayed in the multifunction display may deviate from those of the tyre pressure gauge as they refer to sea level. At high altitudes, the tyre pressure values indicated by a pressure gauge are higher than those shown by the on-board computer. In this case, do not reduce the tyre pressure.

Make sure to observe the following further related subject:

- Notes on tyre pressure (→ page 494)

Restarting the tyre pressure monitoring system
Requirements:

- The recommended tyre pressure is correctly set for the respective operating status on each of the four wheels (→ page 494).

Restart the tyre pressure monitoring system in the following situations:

- The tyre pressure has changed.
- The wheels or tyres have been changed or newly fitted.

On-board computer:

→ Service ▸▸ Tyres

- Swipe downwards on Touch Control on the left-hand side of the steering wheel.
  The Use current pressures as new reference values? message is shown in the multifunction display.
- To begin restart, press Touch Control on the left-hand side of the steering wheel.
  The Tyre press. monitor restarted message is shown in the multifunction display.

  Current warning messages are deleted and the yellow (!) warning lamp goes out.

  After you have been driving for a few minutes, the system checks whether the current tyre pressures are within the specified range. The current tyre pressures are then accepted as reference values and monitored.

Make sure to observe the following further related subject:

- Notes on tyre pressure (→ page 494)

Radio-equipment approval of the tyre pressure monitoring system

Radio equipment approval numbers

Country	Radio equipment approval number
Argentina	CNC COMISIÓN NACIONAL DE COMUNICACIONES CNC ID: H-20027
Australia	
Brazil	ANATEL MODELO: TSSRE4A ANATEL: 05181-17-06643 Este equipamento opera em caráter secundário, isto é, não tem direito à proteção contrainterferência prejudicial, mesmo de estações do mesmo tipo e não pode causar interferência a sistemas operando em caráter primário.

Country	Radio equipment approval number
European Union	CE Hiermit erklärt Huf Hülsbeck & Fürst GmbH & Co. KG, dass der Funkanlagentyp TSSRE4A & TSSSG4G6 der Richtlinie 2014/53/EU entspricht. Der vollständige Text der EU-Konformitätserklärung ist unter der folgenden Internetadresse verfügbar: http://www.huf-group.com/eudoc Frequenzband: 433,92 MHz Abgestrahlte maximale Sendeleistung: <10 mW Hersteller: Huf Electronics Bretten GmbH Gewerbestr. 40 75015 Bretten Germany
Indonesia	52166/SDPPI/2017 3533
Israel	A. The use of this product does not need a wireless operation license. B. The product does not include an RF disturbance protection, and should not disturb other licensed products. C. It is forbidden to replace the antenna or to make any change in this product.
Jordan	Kingdom of Jordan Type approval for Tyre Pressure Sensor and ECU Manufacturer: Huf Electronics Bretten GmbH Model: TSSRE4A Type Approval Number: TRC/LPD/2017/421 Model: TSSSG4G6 Type Approval Number: TRC/LPD/2017/422
Malaysia	MCMC CIDF17000184 Model: TSSRE4A & TSSSG4G6 RAQP/57A/0817/S(17-2424)

Country	Radio equipment approval number
Morocco	AGREE PAR L'ANRT MAROC Modele: TSSRE4A Numero d'agrement: MR 14320 ANRT 2017 Date d'agrement: 07/07/2017 Modele: TSSSG4G6 Numero d'agrement: MR 14319 ANRT 2017 Date d'agrement: 07/07/2017
Mexico	Model: TSSRE4A IFETEL: RLVHUTS17-0806
Moldova	1024
Oman	TRA R/4516/17 D100428

Country	Radio equipment approval number
Philip-pines	NTC Type Approved No: ESD-1715393C
Russia	
Serbia	И 005 17
Singapore	Complies with IDA Standards DA103787

Country	Radio equipment approval number
South Africa	TA-2017/1393 TA-2017/1391

Country	Radio equipment approval number
Taiwan	 CCAO17LP0380T4 CCAO17LP0390T7 經型式認證合格之低功率射頻電機,非經許可,公司、商號或使用者均 不得擅自變更頻率、加大功率或變更原設計之特性及功能。低功率射 頻電機之使用不得影響飛航安全及干擾合法通信;經發現有干擾現象 時,應立即停用,並改善至無干擾時方得繼續使用。前項合法通信,指依
	電信法規定作業之無線電通信。低功率射頻電機須忍受合法通信或工 業、科學及醫療用電波輻射性電機設備之干擾。 According to “Administrative Regulations on Low Power Radio Waves Radiated Devices”. Without permission granted by the DGT, any company, enterprise, or user is not allowed to change frequency, enhance transmitting power or alter original characteristic as well as performance to a approved low power radio-frequency devices. The low power radio-frequency devices shall not influence aircraft security and interfere legal communications; If found, the user shall cease operating immediately until no interference is achieved. The said legal communications means radio communications is operated in compliance with the Telecommunications Act. The low power radio-frequency devices must be susceptible with the interference from legal communications or ISM radio wave radiated devices.
Thailand	This telecommunication equipment conforms to NTC technical requirement.
Ukraine	 Model: TSSRE4A & TSSSG4G6 UA.TR.109.0109-17

Country	Radio equipment approval number
United Arab Emirates (UAE)	TRA Registered No: ER57806/17 Dealer No: DA36976/14 TRA Registered No: ER57807/17 Dealer No: DA36976/14
Vietnam	 Huf Hülsbeck & Fürst GmbH & Co. KG Model: TSSRE4A No: C0112200717AF04A2

Tyre pressure loss warning system

Function of the tyre pressure loss warning system

The tyre pressure loss warning system warns the driver by means of display messages when there is a severe tyre pressure loss.

After a change in tyre pressure, a wheel rotation or a tyre change, or if you have refitted wheels or tyres, the tyre pressure loss warning system has to be restarted (→ page 502).

The tyre pressure loss warning system does not replace the need to regularly check the tyre pressures.

System limitations

The system may be impaired or may not function particularly in the following situations:

- incorrectly set tyre pressure
- sudden pressure loss caused, for example, by a foreign object penetrating the tyre
- steady pressure loss in several tyres

The system has a restricted or delayed function particularly in the following situations:

- poor ground conditions, e.g. snow or gravel
- driving with snow chains
- when adopting a very sporty driving style with high cornering speeds or sudden acceleration
- driving with a very heavy or large trailer
- driving with a high load

Be sure to also observe the following further related subjects:

- Notes on tyre pressure (→ page 494)
- Display messages about the tyres (→ page 583)

Restarting the tyre pressure loss warning system

Requirements:

- The recommended tyre pressure is correctly set for the respective operating status on each of the four wheels (→ page 494).

Restart the tyre pressure loss warning system in the following situations:

- The tyre pressure has changed.
- The wheels or tyres have been changed or newly fitted.

On-board computer:

Service ▸▸ Tyres

▶ Swipe downwards on Touch Control on the left-hand side of the steering wheel.
The Run Flat Indicator activeRestart message is shown in the multifunction display.

Restart the tyre pressure loss warning system in the following situations:

- The tyre pressure has changed.
- The wheels or tyres have been changed or newly fitted.

▶ To begin restart, press Touch Control on the left-hand side of the steering wheel.
The Tyre pressure now OK? message is shown in the multifunction display.

▶ Select Yes.

▶ To confirm restart, press Touch Control on the left-hand side of the steering wheel.
The Run Flat Indicator restarted message is shown in the multifunction display.

After you have driven for a few minutes, the tyre pressure loss warning system monitors the set tyre pressures of all the tyres.

Be sure to also observe the following further related subjects:

- Notes on tyre pressure (→ page 494)

Wheel change

Notes on selecting, fitting and replacing tyres

Mercedes-AMG vehicles: observe the notes in the Supplement. Otherwise, you may fail to recognise dangers.

You can ask for information regarding permitted wheel/tyre combinations at a Mercedes-Benz Service Centre.

⚠ WARNING Risk of accident due to incorrect dimensions of wheels and tyres

If wheels and tyres of the wrong size are used, the wheel brakes or wheel suspension components may become damaged.

▶ Always replace wheels and tyres with those that fulfil the specifications of the original part.

When replacing wheels, make sure to fit the correct:

- Designation
- Type

When replacing tyres, make sure to fit the correct:

- Designation
- Manufacturer
- Type

WARNING Risk of injury through exceeding the specified tyre load-bearing capacity or the permissible speed rating

Exceeding the specified tyre load-bearing capacity or the permissible speed rating may lead to tyre damage and to the tyres bursting.

- Therefore, only use tyre types and sizes approved for your vehicle model.
- Observe the tyre load-bearing capacity rating and speed rating required for your vehicle.

NOTE Vehicle and tyre damage through tyre types and sizes that have not been approved

For safety reasons, only use tyres, wheels and accessories which have been specially approved by Mercedes-Benz for your vehicle.

These tyres are specially adapted to the control systems, such as ABS, ESP® and 4MATIC, and marked as follows:

- MO = Mercedes-Benz Original
- MOE = Mercedes-Benz Original Extended (run-flat tyres only for certain wheels)
- MO1 = Mercedes-Benz Original (only certain AMG tyres)

Certain characteristics, such as handling, vehicle noise emissions, fuel consumption, etc. may otherwise be adversely affected. Furthermore, other tyre sizes could result in the tyres rubbing against the body and axle components when loaded. This could result in damage to the tyre or the vehicle.

Only use tyres, wheels and accessories that have been checked and recommended by Mercedes-Benz.

NOTE Risk to driving safety from retreaded tyres

Retreaded tyres are neither tested nor recommended by Mercedes-Benz, since previous damage cannot always be detected on retreaded tyres.

For this reason driving safety cannot be guaranteed.

- Do not use used tyres if you have no information about their previous usage.

NOTE Possible damage to wheels or tyres when driving over obstacles

Large wheels have a lower tyre section width. The lower the tyre section width, the greater is the risk of damage to wheels or tyres when driving over obstacles.

- Avoid obstacles or drive particularly carefully.

NOTE Damage to electronic component parts from the use of tyre-fitting tools

Vehicles with a tyre pressure monitoring system: electronic component parts are located in the wheel. Tyre-fitting tools should not be applied in the area of the valve.

The tools could damage the electronic component parts.

- Have the tyres changed at a qualified specialist workshop only.

NOTE Damage to summer tyres at low ambient temperatures

At low ambient temperatures, tears could form when driving with summer tyres, causing permanent damage to the tyre.

- At temperatures below 7 °C, use M+S tyres.

Accessory parts that are not approved for your vehicle by Mercedes-Benz or are not being used correctly can impair the operating safety.

Before purchasing and using non-approved accessories, visit a qualified specialist workshop and enquire about:

- Suitability
- Legal stipulations
- Factory recommendations

WARNING Risk of accident with high performance tyres

The special tyre tread in combination with the optimised tyre compound, means that the risk of skidding or hydroplaning on wet roads is increased.

In addition, the tyre grip is greatly reduced at a low outside temperature and tyre running temperature.

- Switch on the ESP® and adapt your driving style accordingly.
- Use M+S tyres at outside temperatures of less than 50 °F.

Observe the following when selecting, fitting and replacing tyres:

- Country-specific requirements for tyre approval that define a specific tyre type for your vehicle.

  Furthermore, the use of certain tyre types in certain regions and areas of operation can be highly beneficial.
- Only use tyres and wheels of the same type (summer tyres, winter tyres, MOExtended tyres) and the same make.
- Only fit wheels of the same size on one axle (left and right).

  It is only permissible to fit a different wheel size in the event of a flat tyre in order to drive to the specialist workshop.
- Only fit tyres of the correct size onto the wheels.
- Do not make any modifications to the brake system, the wheels or the tyres.

  The use of shims or brake dust shields is not permitted and may invalidate the vehicle's general operating permit.

- **Vehicles with a tyre pressure monitoring system:** all fitted wheels must be equipped with functioning sensors for the tyre pressure monitoring system.
- At temperatures below 7 °C, use winter tyres or all-season tyres marked M+S for all wheels.

  Winter tyres bearing the snowflake symbol in addition to the M+S marking provide the best possible grip in wintry road conditions.
- For M+S tyres, only use tyres with the same tread.
- Observe the maximum permissible speed for the M+S tyres fitted.

  If this is below the vehicle's maximum speed, this must be indicated by an appropriate label in the driver's field of vision.
- Run in new tyres at moderate speeds for the first 100 km.
- Replace the tyres after six years at the latest, regardless of wear.
- **When replacing with tyres that do not feature run-flat characteristics:** vehicles with MOExtended tyres are not equipped with a TIREFIT kit at the factory. Equip the vehicle with a TIREFIT kit after replacing with tyres that do not feature run-flat characteristics, e.g. winter tyres.

ⓘ You can permanently limit the maximum vehicle speed for driving with winter tyres (→ page 216).

For more information on wheels and tyres, contact a qualified specialist workshop.

Be sure to also observe the following further related subjects:

- Notes on tyre pressure (→ page 494)
- Tyre pressure table (→ page 495)
- Notes on the emergency spare wheel (→ page 513)

Notes on interchanging wheels

⚠ WARNING Risk of injury through different wheel sizes

Interchanging the front and rear wheels if the wheels or tyres have different dimensions may severely impair the driving characteristics.

The disk brakes or wheel suspension components may also be damaged.

▶ Rotate front and rear wheels only if the wheels and tyres are of the same dimensions.

Interchanging the front and rear wheels if the wheels or tyres have different dimensions can render the general operating permit invalid.

The wear patterns on the front and rear wheels differ:

- Front wheels wear more on the shoulder of the tyre
- Rear wheels wear more in the centre of the tyre

Do not drive with tyres that have too little tread depth. This significantly reduces traction on wet roads (aquaplaning).

On vehicles with the same front and rear wheel size, you can interchange the wheels every 5,000 to 10,000 km, depending on the wear. Ensure the direction of rotation is maintained for the wheels.

Observe the instructions and safety notes on "Changing a wheel" when doing so (→ page 508).

Notes on storing wheels

When storing wheels, observe the following notes:

- After removing wheels, store them in a cool, dry and preferably dark place.
- Protect the tyres from contact with oil, grease or fuel.

Overview of the tyre-change tool kit

Apart from some country-specific variants, vehicles are not equipped with a tyre-change tool kit. For more information on which tyre-changing tool kits are required and approved for performing a wheel change on your vehicle, consult a qualified specialist workshop.

You require the following tools, for instance, to change a wheel:

- Jack
- Chock
- Wheel wrench
- Centring pin

ⓘ The jack weighs approximately 3.4 kg. The maximum load capacity of the jack can be found on the sticker affixed to the jack. The jack is maintenance-free. If there is a malfunction, please contact a qualified specialist workshop.

The tyre-change tool kit is located in tool bag ① in the load compartment.

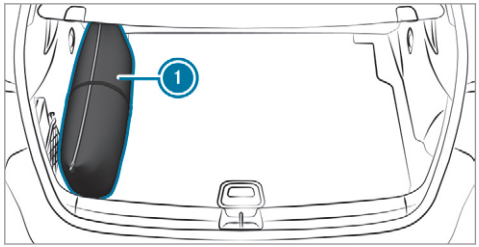

Tool bag contains:

- Jack
- Gloves
- Wheel wrench
- Centring pin
- Folding chock
- Ratchet for jack

Setting up the folding chock

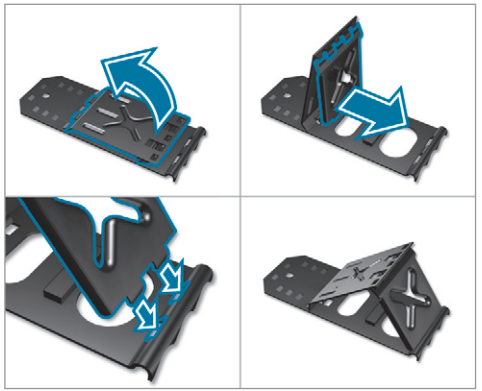

Preparing the vehicle for a wheel change

Requirements:

- The required tyre-change tool kit is available. If your vehicle is not equipped with the tyre-change tool kit, consult a qualified specialist workshop to find out about suitable tools.
- The vehicle is not on a slope.
- The vehicle is on solid, non-slippery and level ground.

▶ Apply the electric parking brake manually.

▶ Move the front wheels to the straight-ahead position.

▶ **Vehicles with manual transmission:** engage first or reverse gear.

▶ **Vehicles with automatic transmission:** shift into position P.

▶ Switch off the engine.

▶ Make sure that the engine cannot be started.

▶ Place chocks or other suitable items under the front and rear of the wheel that is diagonally opposite the wheel you wish to change.

▶ Remove the hub caps if necessary (→ page 508).

▶ Raise the vehicle (→ page 509).

Removing and fitting hub caps

Requirements:

- The vehicle is prepared for a wheel change (→ page 508).

Vehicles with steel wheels

The wheel trim covers the wheel bolts. Before unscrewing the wheel bolts, remove the wheel trim.

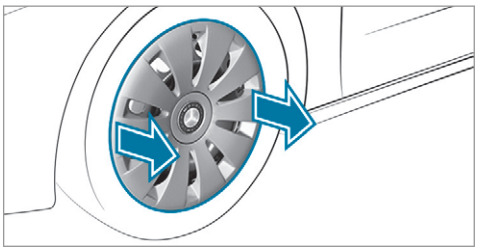

▶ **To remove:** using both hands, carefully reach into two wheel trim openings and remove the wheel trim.

Plastic hub cap

▶ **To remove:** turn the centre cover of the hub cap anti-clockwise and remove the hub cap.

- **To fit:** make sure that the centre cover of the hub cap is turned anti-clockwise.
- Position the hub cap and turn the centre cover clockwise until the hub cap engages physically and audibly.

Aluminium hub cap

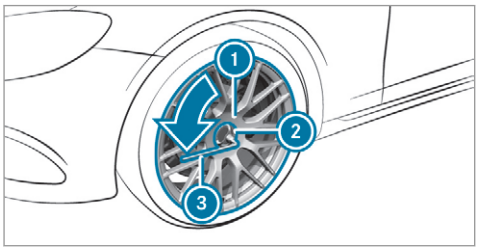

- **To remove:** position socket (2) on hub cap (1).

ⓘ The socket can be found in the tyre-change tool kit.

- Position wheel spanner (3) on socket (2).
- Using wheel spanner (3), turn hub cap (1) anti-clockwise and remove it.
- **To fit:** position hub cap (1) and turn until it is completely flush with the wheel.
- Position socket (2) on hub cap (1).
- Attach wheel spanner (3) to socket (2) and tighten the hub cap clockwise.
  Specified tightening torque: 25 Nm.

Raising the vehicle when changing a wheel

Requirements:

- There are no persons in the vehicle.
- The vehicle has been prepared for a wheel change (→ page 508).
- The hub caps have been removed (→ page 508).

Important notes on using the jack:

- Use only a vehicle-specific jack that has been approved by Mercedes-Benz to raise the vehicle.
- The jack is only designed for raising and holding the vehicle for a short time while a wheel is being changed and not for maintenance work under the vehicle.
- The jack must be placed on a firm, flat and non-slip surface. If necessary, use a large, flat, load-bearing, non-slip underlay.
- The foot of the jack must be positioned vertically under the jack support point.

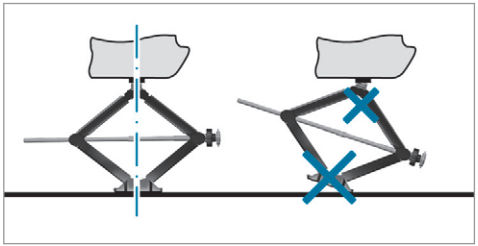

Rules of conduct when the vehicle is raised:

- Never place your hands or feet under the vehicle.
- Never lie under the vehicle.
- Do not start the engine and do not release the electric parking brake.

- Do not open or close any doors or the tailgate.

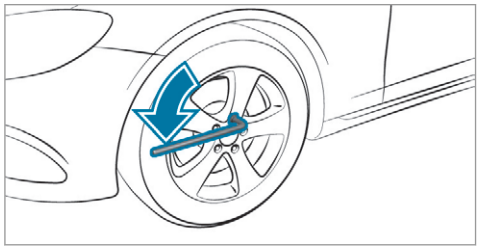

▶ Using the wheel wrench, loosen the wheel bolts on the wheel you wish to change by about one full turn. Do not unscrew the bolts completely.

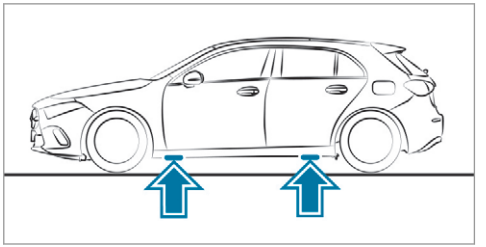

Position of jack support points

⚠ WARNING Risk of injury from incorrect positioning of the jack

If you do not position the jack correctly at the appropriate jacking point of the vehicle, the jack could tip with the vehicle raised.

▶ Only position the jack at the appropriate jacking point of the vehicle. The base of the jack must be positioned vertically under the jacking point of the vehicle.

! NOTE Vehicle damage from the jack

If you do not position the jack correctly at the appropriate jack support point of the vehicle, the jack could tip over with the vehicle raised.

▶ The jack is designed exclusively for jacking up the vehicle at the jack support points.

▶ Take the ratchet out of the tyre-change tool kit and place it on the hexagon nut of the jack so that the letters "AUF" are visible.

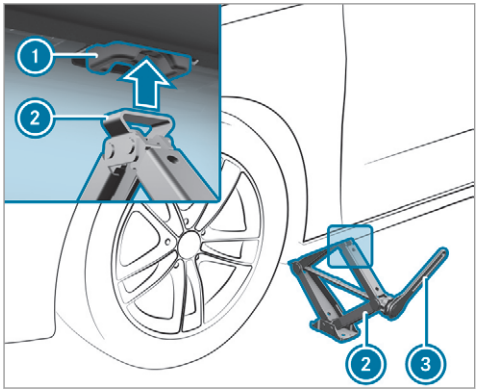

- Position jack (2) at jack support point (1).

(i) If there is a total loss of pressure in a tyre, it may be possible that the jack cannot be positioned at jack support point (1). In this case, unload the vehicle.

- Turn ratchet (3) clockwise until jack (2) sits completely on jack support point (1) and the base of the jack lies evenly on the ground.
- Turn ratchet (3) until the tyre is raised a maximum of 3 cm from the ground.
- Loosen and remove the wheel (→ page 511).

Removing a wheel

Requirements:

- The vehicle is raised (→ page 509).

When changing a wheel, avoid applying any force to the brake discs, since this could impair the level of comfort when braking.

! **NOTE** Damage to threading from dirt on wheel bolts

- Do not place wheel bolts in sand or on a dirty surface.

- Unscrew the uppermost wheel bolt completely.

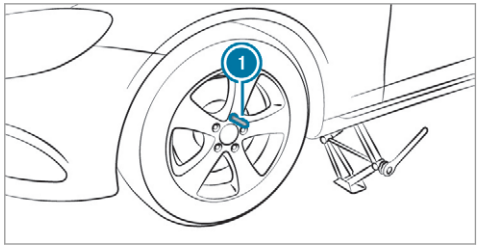

- Screw centring pin (1) into the thread instead of the wheel bolt.
- Unscrew the remaining wheel bolts completely.
- Remove the wheel and, if necessary, store it in the load compartment.
- Notes on removing an emergency spare wheel (→ page 513).
- Fit the new wheel (→ page 511).

Fitting a new wheel

Requirements:

- The wheel is removed (→ page 511).

WARNING Risk of accident from losing a wheel

Oiled, greased or damaged wheel bolt/wheel nut threads or wheel hub/wheel mounting bolt threads can cause the wheel bolts/wheel nuts to come loose.

As a result, you could lose a wheel while driving.

- Never oil or grease the threads.
- In the event of damage to the threads, contact a qualified specialist workshop immediately.
- Have the damaged wheel bolts or damaged hub threads replaced.
- Do not continue driving.

- Observe the information on the choice of tyres (→ page 503).

For tyres with a specified direction of rotation, an arrow on the side wall of the tyre indicates the correct direction of rotation. Observe the direction of rotation when fitting.

- Slide the wheel to be mounted onto the centring pin and push it on.
- Notes on fitting an emergency spare wheel (→ page 513).

WARNING Risk of injury from tightening wheel bolts and nuts

If you tighten the wheel bolts or wheel nuts when the vehicle is raised, the jack could tip.

- Only tighten wheel bolts or wheel nuts when the vehicle is on the ground.

- Be sure to observe the instructions and safety notes on "Changing a wheel" (→ page 503).
- For safety reasons, only use wheel bolts which have been approved by Mercedes-Benz and for the wheel in question.
- Tighten the wheel bolts evenly in a diagonal pattern in the order indicated until they are finger-tight.
- Unscrew the centring pin.
- Tighten the last wheel bolt until it is finger-tight.
- Lower the vehicle (→ page 512).

Lowering the vehicle after a wheel change

Requirements:

- The new wheel has been fitted (→ page 511).

NOTE Damage to the emergency spare wheel when lowering the vehicle

Lowering the vehicle without previously inflating the emergency collapsible spare wheel can damage its rim.

- Inflate the emergency collapsible spare wheel using the tyre inflation compressor before lowering the vehicle.

- Place the ratchet onto the hexagon nut of the jack so that the letters "AB" are visible.
- **To lower the vehicle:** turn the ratchet of the jack anti-clockwise.

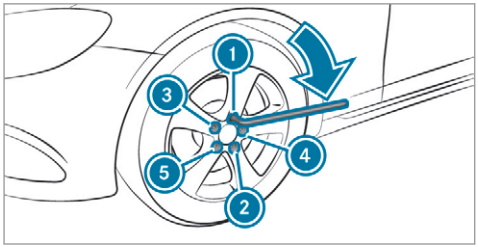

- Tighten the wheel bolts evenly in a diagonal pattern in the order indicated (1) to (5) with a maximum of 80 Nm.
- Tighten the wheel bolts evenly in a diagonal pattern in the order indicated (1) to (5) to the specified tightening torque of 130 Nm.

⚠ WARNING Risk of injury through incorrect tightening torque

The wheels could come loose if the wheel bolts or wheel nuts are not tightened to the prescribed tightening torque.

- Make sure the wheel bolts or wheel nuts are tightened to the prescribed tightening torque.
- If you are not sure, do not move the vehicle. Consult a qualified specialist workshop and have the tightening torque checked immediately.

- Check the tyre pressure of the newly mounted wheel and adjust accordingly.
- **Vehicles with tyre pressure loss warning system:** restart the tyre pressure loss warning system (→ page 502).
  Exception: the new wheel is an emergency spare wheel.
- **Vehicles with a tyre pressure monitoring system:** restart the tyre pressure monitoring system (→ page 497).
  Exception: the new wheel is an emergency spare wheel.

Make sure to observe the following further related subject:

- Notes on tyre pressure (→ page 494)

Emergency spare wheel

Notes on the emergency spare wheel

⚠ WARNING Risk of accident caused by incorrect wheel and tyre dimensions

The wheel or tyre size and the tyre type of the emergency spare wheel or spare wheel and the wheel to be replaced may differ. Mounting an emergency spare wheel/spare wheel may severely impair the driving characteristics.

To prevent hazardous situations:

- Adapt your driving style accordingly and drive carefully.
- Never fit more than one emergency spare wheel or spare wheel that differs in size.
- Only use an emergency spare wheel or spare wheel of a different size briefly.
- Do not switch off ESP®.
- Have the emergency spare wheel or spare wheel of a different size replaced

at the nearest qualified specialist workshop. The new wheel must have the correct dimensions.

Observe the following notes on removing an emergency spare wheel:

- Before stowing the emergency spare wheel, make sure there is no air left in the tyre.

  If necessary, allow the air to escape.
- **To release air from the tyre:** remove the valve cap of the tyre.
- Press down the metal insert in the valve using a pointed object, e.g. a pen.
- Screw the valve cap onto the valve.
- Stow the deflated emergency spare wheel in the emergency spare wheel bag in the luggage compartment (→ page 514).

Observe the following notes on fitting an emergency spare wheel:

- Fit the emergency spare wheel when it is deflated (→ page 511).
- Inflate the emergency spare wheel after fitting it (→ page 515).

The maximum permissible speed with an emergency spare wheel fitted is 80 km/h.

Do not fit the emergency spare wheel with snow chains.

Replace the emergency spare wheel after six years at the latest, regardless of wear.

ⓘ **Vehicles with a tyre pressure loss warning system:** if an emergency spare wheel is fitted the tyre pressure loss warning system cannot function reliably. Only restart the system again when the emergency spare wheel has been replaced with a new wheel.
Vehicles with a tyre pressure monitoring system: if an emergency spare wheel is fitted the tyre pressure monitoring system cannot function reliably. For a few minutes after an emergency spare wheel is fitted, the system may still display the tyre pressure of the removed wheel. Only restart the system again when the emergency spare wheel has been replaced with a new wheel.

Be sure to also observe the following further related subjects:

- Notes on tyre pressure (→ page 494)
- Tyre pressure table (→ page 495)

Removing the emergency spare wheel

The deflated emergency spare wheel is secured in the emergency spare wheel bag in the load compartment.

▶ Observe the information on mounting tyres (→ page 503).
▶ Open the tailgate.
▶ Detach the securing straps.
▶ Unhook the retaining spring hooks of the securing straps from the brackets.
▶ Remove the emergency spare wheel bag with the emergency spare wheel.
▶ Open the emergency spare wheel bag and remove the emergency spare wheel.

Inflating the emergency spare wheel

NOTE Overheating due to the tyre inflation compressor running too long

▶ Do not run the tyre inflation compressor for longer than ten minutes without interruption.

Requirements:

- Comply with the manufacturer's safety notes on the sticker of the emergency spare wheel and on the tyre inflation compressor.
- Remove the tyre inflation compressor from the stowage space under the luggage compartment floor (→ page 474).

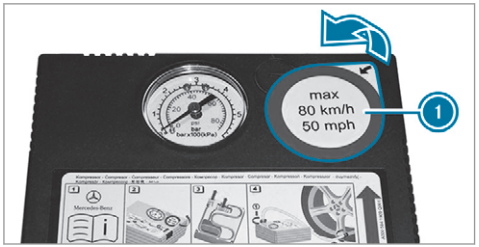

▶ Remove sticker 1 from the tyre inflation compressor housing and affix it to the instrument cluster within the driver's field of vision.

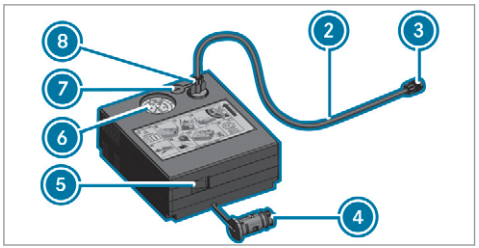

▶ Pull filler hose 2 and plug 4 out of the tyre inflation compressor housing.

▶ Insert plug 8 of filler hose 2 in the socket on the tyre inflation compressor and then turn it until plug 8 engages.

▶ Unscrew the cap from the valve on the emergency spare wheel.

▶ Screw union nut 3 of filler hose 2 onto the valve.

▶ Make sure on and off switch 5 of the tyre inflation compressor is set to **0**.

▶ Insert plug 4 in a socket in your vehicle.

- Cigarette lighter socket: (→ page 127)
- 12 V socket: (→ page 128)
- Observe the notes on the cigarette lighter: (→ page 127)
- Observe the notes on sockets: (→ page 128)

▶ Turn the key to position 1 in the ignition lock.

- Press on and off switch (5) on the tyre inflation compressor to **I**.
  The tyre inflation compressor is switched on. The tyre is inflated. The tyre pressure is shown on manometer (6).
- Pump the tyre to the specified tyre pressure. The specified tyre pressure is stated on the label of the emergency spare wheel.
- When the specified tyre pressure has been reached, press on and off switch (5) on the tyre inflation compressor to **0**.
  The tyre inflation compressor is switched off.
- Turn the key to position 0 in the ignition lock.
- If the tyre pressure is higher than the specified pressure, press pressure release valve button (7) until the correct tyre pressure has been reached.
- Unscrew union nut (3) of filler hose (2) from the valve.
- Screw the valve cap of the emergency spare wheel onto the valve again.
- Stow filler hose (2) and plug (4) in the lower section of the compressor housing.
- Stow the tyre inflation compressor in the vehicle.

Collapsible spare wheel

Notes on the collapsible spare wheel

⚠ **WARNING** Risk of accident caused by incorrect wheel and tyre dimensions

The wheel or tyre size and the tyre type of the emergency spare wheel or spare wheel and the wheel to be replaced may differ. Mounting an emergency spare wheel/spare wheel may severely impair the driving characteristics.

To prevent hazardous situations:

- Adapt your driving style accordingly and drive carefully.
- Never fit more than one emergency spare wheel or spare wheel that differs in size.
- Only use an emergency spare wheel or spare wheel of a different size briefly.
- Do not switch off ESP®.
- Have the emergency spare wheel or spare wheel of a different size replaced at the nearest qualified specialist workshop. The new wheel must have the correct dimensions.

The collapsible spare wheel is only available in certain countries.

The collapsible spare wheel is an emergency spare wheel which is only suitable for use for a limited period of time and in a restricted manner in the event of a flat tyre (e.g. until the nearest workshop).

The tyre sidewalls are folded when in transport mode. Before use, the collapsible spare wheel has to be inflated with the accompanying compressor.

Check the tyre pressure of the collapsible spare wheel once fitted. Correct the pressure as necessary.

The maximum permissible speed with a collapsible spare wheel fitted is 80 km/h.

Do not fit snow chains with the collapsible spare wheel.

Replace the collapsible spare wheel after six years at the latest, regardless of wear.

ⓘ **Vehicles with a tyre pressure loss warning system:** if a collapsible spare wheel is fitted, the tyre pressure loss warning system cannot function reliably. Only restart the system again when the collapsible spare wheel has been replaced with a new wheel.
Vehicles with a tyre pressure monitoring system: if a collapsible spare wheel is fitted the tyre pressure monitoring system cannot function reliably. For a few minutes after an emergency spare wheel is fitted, the system may still display the tyre pressure of the removed wheel. Only restart the system again when the collapsible spare wheel has been replaced with a new wheel.

Be sure to also observe the following further related subjects:

- Notes on tyre pressure (⟶ page 494)
- Tyre pressure table (⟶ page 495)

Removing the collapsible spare wheel

The collapsible spare wheel is secured in the collapsible spare wheel bag in the load compartment.

- ▶ Observe the information on mounting tyres (⟶ page 503).
- ▶ Open the load compartment.
- ▶ Detach the securing straps.
- ▶ Unhook the retaining spring hooks of the securing straps from the brackets.
- ▶ Remove the collapsible spare wheel bag together with the collapsible spare wheel.
- ▶ Open the collapsible spare wheel bag and remove the collapsible spare wheel.

Inflating the collapsible spare wheel

Requirements:

- Mount the collapsible spare wheel as described (⟶ page 511).
- Remove the tyre inflation compressor from the stowage space under the luggage compartment floor (⟶ page 474).

! NOTE Damage to the collapsible spare wheel when lowering the vehicle

Lowering the vehicle without previously inflating the collapsible spare wheel can damage its rim.

- ▶ Inflate the collapsible spare wheel using the tyre inflation compressor before lowering the vehicle.

! NOTE Overheating due to the tyre inflation compressor running too long

- ▶ Do not run the tyre inflation compressor for longer than ten minutes without interruption.

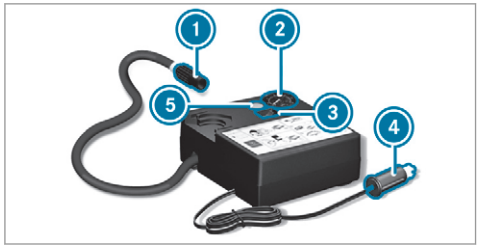

- Pull connector (4) and the hose out of the housing.
- Unscrew the cap from the valve on the collapsible spare wheel.
- Screw union nut (1) of the hose onto the valve.
  Make sure on and off switch (3) of the tyre inflation compressor is set to **0**.
- Insert plug (4) into the cigarette lighter socket (→ page 127) or into a 12 V socket (→ page 128) in your vehicle.
- Switch on the power supply (→ page 164).
- Press on and off switch (3) on the tyre inflation compressor to **I**.
  The tyre inflation compressor is switched on. The tyre is inflated. The tyre pressure is shown on manometer (2).
- Pump the tyre to the specified tyre pressure. The specified tyre pressure is printed on the yellow label of the collapsible spare wheel.
- When the specified tyre pressure has been reached, press on and off switch (3) on the tyre inflation compressor to **0**.
- If the tyre pressure is higher than the specified pressure, press pressure release valve button (5) until the correct tyre pressure has been reached.

Notes on technical data

Mercedes-AMG vehicles: be sure to observe the notes in the Supplement. Otherwise, you may fail to recognise dangers.

Plug-in hybrid: be sure to observe the notes in the Supplement. Otherwise, you may fail to recognise dangers.

The technical data was determined in accordance with EU Directives. The data stated only applies to vehicles with standard equipment. You can obtain further information from a Mercedes-Benz Service Centre.

Only for certain countries: you can find vehicle-specific vehicle data in the EC-Certificate of Conformity (CERTIFICATE OF CONFORMITY). These documents are delivered with your vehicle.

On-board electronics

Notes on tampering with the engine electronics

NOTE Premature wear through improper maintenance

Improper maintenance may cause vehicle components to wear more quickly and the vehicle's operating permit may be invalidated.

- Always have work on the engine electronics and related components carried out at a qualified specialist workshop.

Two-way radios

Notes on fitting two-way radios

WARNING Risk of accident due to improper work on two-way radios

The electromagnetic radiation from two-way radios can interfere with the on-board electronics if RF transmitters are manipulated or retrofitted incorrectly.

This could jeopardise the operating safety of the vehicle.

- You should have all work on electrical and electronic components carried out at a qualified specialist workshop.

WARNING Risk of accident from incorrect operation of two-way radios

If you operate two-way radios incorrectly in the vehicle, the electromagnetic radiation could interfere with the on-board electronics, e.g.:

- if the two-way radio is not connected to an exterior aerial
- if the exterior aerial is not correctly mounted or is not of low reflection

This could jeopardise the operating safety of the vehicle.

- Have the low-reflection exterior aerial fitted at a qualified specialist workshop.

- When operating two-way radios in the vehicle, always connect them to the low-reflection exterior aerial.

! NOTE Invalidation of the operating permit due to failure to comply with the instructions for installation and use

The operating permit may be invalidated if the instructions for installation and use of two-way radios are not observed.

- Only use approved frequency bands.
- Observe the maximum permissible output power in these frequency bands.
- Only use approved aerial positions.

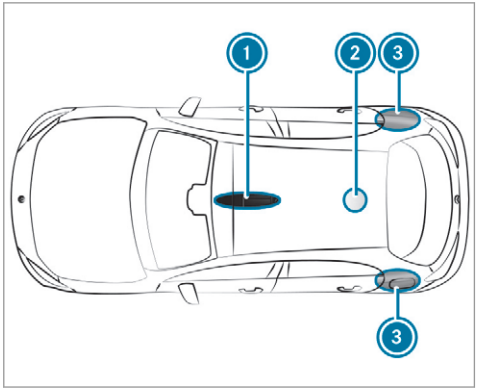

1. Front roof area
2. Rear roof area
3. Rear wings

On vehicles with a panoramic sliding sunroof, fitting an aerial to the front or rear roof area is not permitted.

On the rear wings, it is recommended that you fit the aerial on the side of the vehicle closest to the centre of the road.

Use Technical Specification ISO/TS 21609 (Road Vehicles – "EMCs for installation of aftermarket radio frequency transmitting equipment") when retrofitting two-way radios. Comply with the legal requirements for detachable parts.

If your vehicle has fittings for two-way radio equipment, use the power supply and aerial connectors provided in the pre-installation. Be sure to observe the manufacturer's supplements when fitting.

Two-way radio transmission output

The maximum transmission output (PEAK) at the base of the aerial must not exceed the values in the following table.

Frequency band and maximum transmission output

Frequency band	Maximum transmission output
Short wave 3 - 54 MHz	100 W
4 m frequency band 74 - 88 MHz	30 W
2 m frequency band 144 - 174 MHz	50 W
Trunked radio system/Tetra 380 - 460 MHz	10 W
70 cm frequency band 420 - 450 MHz	35 W
Two-way radio (2G/3G/4G)	10 W

The following can be used in the vehicle without restrictions:

- two-way radios with a maximum transmission output of up to 100 mW
- RF transmitters with transmitter frequencies in the 380 - 410 MHz frequency band and a maximum transmission output of up to 2 W (trunked radio system/Tetra)
- mobile phones (2G/3G/4G)

There are no restrictions when positioning the aerial on the outside of the vehicle for some wavebands.

This applies to the following wavebands:

- trunked radio system/Tetra
- 70 cm frequency band
- 2G/3G/4G

Vehicle identification plate, VIN and engine number overview

Vehicle identification plate

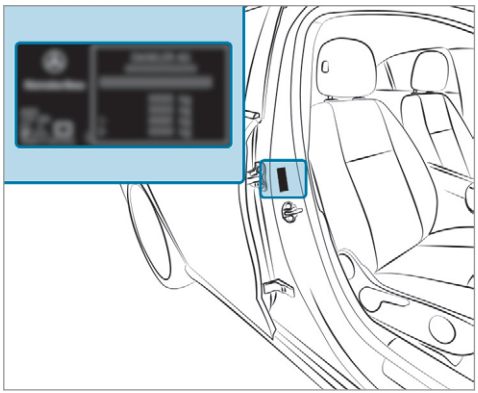

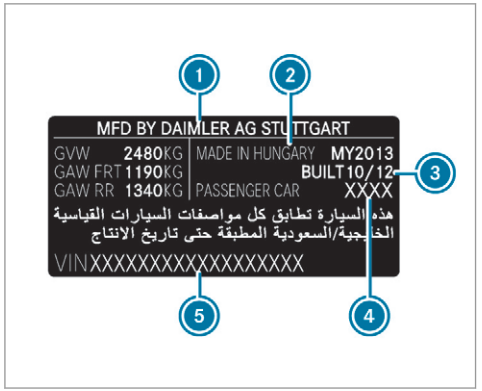

Vehicle identification plate (example: Kuwait)

1. Vehicle manufacturer
2. Place of manufacture
3. Manufacturing date
4. Vehicle model
5. VIN

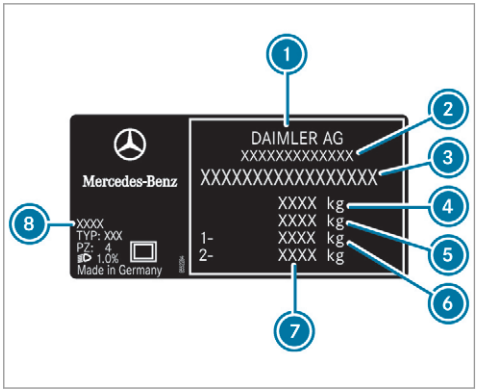

Vehicle identification plate (example: all other countries)

1. Vehicle manufacturer
2. EU general operating permit number (only for certain countries)
3. VIN (vehicle identification number)
4. Maximum permissible gross vehicle weight (kg)
5. Maximum permissible gross weight of vehicle combination (kg) (only for specific countries)
6. Maximum permissible front axle load (kg)
7. Maximum permissible rear axle load (kg)
8. Paint code

ⓘ The data shown in the illustration is example data.

VIN and engine number

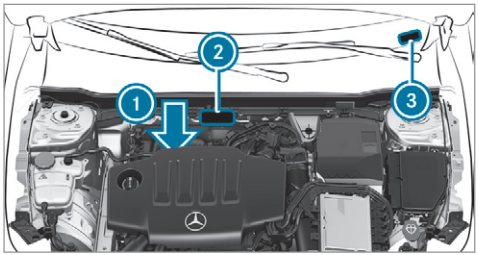

1. Engine number stamped into the crankcase
2. VIN (vehicle identification number) stamped into the crossmember
3. VIN (vehicle identification number) as a label at the lower edge of the windscreen

The VIN as a label at the lower edge of windscreen 3 is only available in some countries. Further information can be obtained at a qualified specialist workshop.

Operating fluids

Notes on operating fluids

Mercedes-AMG vehicles: be sure to observe the notes in the Supplement. Otherwise, you may fail to recognise dangers.

⚠ **WARNING** Risk of injury from operating fluids harmful to your health

Operating fluids may be poisonous and harmful to your health.

- ▶ Observe the text on the original containers when using, storing or disposing of operating fluids.
- ▶ Always store operating fluids sealed in their original containers.
- ▶ Always keep children away from operating fluids.

ENVIRONMENTAL NOTE Environmental pollution caused by environmentally irresponsible disposal

- ▶ Dispose of operating fluids in an environmentally responsible manner.

Operating fluids include the following:

- fuels
- DeNOx agent AdBlue® for exhaust gas aftertreatment
- lubricants
- coolant
- brake fluid
- windscreen washer fluid
- climate control system refrigerant

Only use products approved by Mercedes-Benz. Damage caused by the use of products that have not been approved is not covered by the Mercedes-Benz warranty or goodwill gestures.

You can identify operating fluids approved by Mercedes-Benz by the following inscriptions on the container:

- MB-Freigabe (e.g. MB-Freigabe 229.51)
- MB-Approval (e.g. MB-Approval 229.51)

Further information on approved operating fluids is available at the following locations:

- in the Mercedes-Benz Specifications for Operating Fluids by entering the designation
  - at https://bevo.mercedes-benz.com
  - in the Mercedes-Benz BeVo app
- at a qualified specialist workshop

⚠ WARNING Risk of fire or explosion from fuel

Fuels are highly flammable.

- ▶ Fire, naked flames, smoking and creation of sparks must be avoided.
- ▶ Switch off the ignition and, if available, the stationary heater, before and while refuelling the vehicle.

⚠ WARNING Risk of injury from fuels

Fuels are poisonous and hazardous to your health.

- ▶ Do not swallow fuel or let it come into contact with skin, eyes or clothing.
- ▶ Do not inhale fuel vapour.
- ▶ Keep children away from fuel.
- ▶ Keep doors and windows closed during the refuelling process.

If you or other people come into contact with fuel, observe the following:

- ▶ Immediately rinse fuel off your skin with soap and water.
- ▶ If fuel comes into contact with your eyes, immediately rinse them thoroughly with clean water. Seek medical attention immediately.
- ▶ If you swallow fuel, seek medical attention immediately. Do not induce vomiting.
- ▶ Change immediately out of clothing that has come into contact with fuel.

Fuel

Information on fuel grades for vehicles with petrol engines

Observe the notes on operating fluids (→ page 523).

! NOTE Damage caused by the wrong fuel

Even small amounts of the wrong fuel could result in damage to the fuel system, the engine and the emission control system.

- ▶ Only refuel using unleaded, sulphur-free fuel that conforms to European EN 228, or an equivalent specification.

Fuel of this specification may contain up to 10% ethanol by volume. Your vehicle is suitable for use with E10 fuel.

Never refuel with one of the following fuels:

- diesel
- regular petrol with an octane number lower than 91 RON
- petrol with more than 10 vol.% ethanol e.g. E15, E20, E85, E100
- petrol with more than 3% methanol by volume, e.g. M15, M30
- petrol with additives containing metal

If you have accidentally refuelled with the wrong fuel:

▶ do not switch the ignition on.

▶ Consult a qualified specialist workshop.

The following compatibility indications for fuel apply to your vehicle:



① For petrol with maximum 5% ethanol by volume

② For petrol with maximum 10% ethanol by volume

According to European standard EN 16942 you can find the compatibility indications at the following locations:

- on the vehicle on the information label on the fuel filler flap (→ page 185).
- on the fuel pump or pump nozzle suitable for your vehicle throughout Europe.

If the available fuel is not sufficiently low in sulphur, this can produce unpleasant odours.

The recommended octane number for your vehicle can also be found on the information label in the fuel filler flap (→ page 185).

As a temporary measure, if the recommended fuel is not available, you may also use regular unleaded petrol with at least 91 RON. This may reduce engine output and increase fuel consumption.

Never refuel using petrol with an even lower RON.

Further information on fuel can be obtained at a filling station or a qualified specialist workshop.

Information on additives in petrol

Observe the notes on operating fluids (→ page 523).

! NOTE Damage from use of unsuitable additives

Even small amounts of the wrong additive may lead to malfunctions occurring.

▶ Only add cleaning additives recommended by Mercedes-Benz to the fuel.

Mercedes-Benz recommends that you use fuel brands that have additives.

In some countries, the fuel available may not have sufficient additives. Residue could build up in the fuel injection system as a result. In this case, in consultation with a Mercedes-Benz service centre, the fuel may be mixed with the cleaning additive recommended by Mercedes-Benz. Be sure to observe the notes and mixing ratios specified on the container.

Information on fuel grades for vehicles with a diesel engine

General notes

Observe the notes on operating fluids (→ page 523).

⚠ WARNING Risk of fire from fuel mixture

If you mix diesel fuel with petrol, the flash point of the fuel mixture is lower than that of pure diesel fuel.

While the engine is running, component parts in the exhaust system may overheat without warning.

- ▶ Never refuel using petrol in diesel engines.
- ▶ Never mix petrol with diesel fuel.

! NOTE Damage caused by the wrong fuel

Even small amounts of the wrong fuel could result in damage to the fuel system, the engine and the emission control system.

- ▶ Only refuel using sulphur-free diesel fuel that conforms to European standard EN 590, or an equivalent specification.
  In countries without sulphur-free diesel fuel, refuel using only low-sulphur diesel fuel with a sulphur content less than 50 ppm.

Never refuel with one of the following fuels:

- petrol
- marine diesel
- heating oil
- pure bio-diesel fuel or vegetable oil
- paraffin or kerosene

If you have accidentally refuelled with the wrong fuel:

- ▶ Do not switch the ignition on.
- ▶ Consult a qualified specialist workshop.

The following compatibility indication for fuel applies to your vehicle:

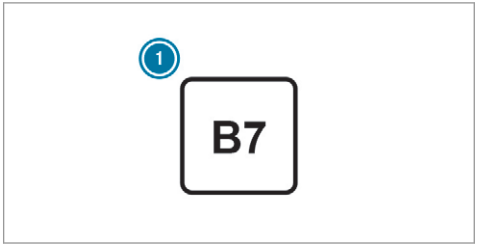

① For diesel fuel with a maximum of 7% by volume bio-diesel (fatty acid methyl ester)

According to European standard EN 16942 you can find the compatibility indications at the following locations:

- on the information label on the fuel filler flap (→ page 185)
- on the fuel pump or pump nozzle suitable for your vehicle throughout Europe

Information on low outside temperatures
Refuel your vehicle with as much winter diesel fuel as possible at the beginning of winter.

Before changing over to winter diesel fuel, the fuel tank should be empty, if possible. When first refuelling with winter diesel fuel, only refuel using a small amount, e.g. to reserve level. The fuel tank can be filled as usual when next refuelling.

Further information on fuel can be obtained at a filling station or a qualified specialist workshop.

Tank content and fuel reserve
The total capacity of the fuel tank may vary, depending on the vehicle equipment.

Capacity

Model	Total capacity
A 220 d A 220 d 4MATIC A 250	43.0 litres or 51.0 litres
A 220 4MATIC A 250 4MATIC	51.0 litres
All other models	43.0 litres
Model	**of which reserve fuel**
All models	5.0 litres

AdBlue®

Notes on AdBlue®
Observe the notes on operating fluids (→ page 523).

AdBlue® is a water-soluble fluid for the NOx exhaust gas aftertreatment of diesel engines.

It may be improper or punishable in some countries to operate a vehicle that uses no AdBlue® or one that does not comply with the specifications of these operating instructions.

NOTE Malfunctions due to the dilution of AdBlue® or the use of additive-enhanced AdBlue®

The function of the NOx exhaust gas aftertreatment can be impaired by the use of unsuitable denoxification agents.

- Only use AdBlue® in accordance with ISO 22241.
- Do not dilute AdBlue® with water.
- Do not use additive-enhanced AdBlue®.

NOTE Damage and malfunctions due to impurities in AdBlue®

Consequences of impurities in AdBlue®:

- increased emission values
- damage to the catalytic converter

- NOx exhaust gas aftertreatment malfunctions

▶ Avoid impurities in AdBlue®.

AdBlue® residues crystallise after a period of time, and contaminate the surfaces with which they come into contact. Clean the dirty surfaces with water as soon as possible.

When you open the AdBlue® tank, small amounts of ammonia vapour may escape. Do not inhale any ammonia vapours that may be released. Only fill the AdBlue® tank in well-ventilated areas.

AdBlue® filling capacity and consumption

Total capacity of AdBlue® tank

Model	Total capacity
All models	23.8 litres

AdBlue® consumption

The average AdBlue® consumption is between 1% and 5% of fuel consumption. Like fuel consumption, AdBlue® consumption is highly dependent upon driving style and operating conditions. For this reason, your vehicle's actual consumption figures under day-to-day operating conditions may differ from the consumption figures calculated. The frequency at which you will have to top up AdBlue® will also vary. Have the AdBlue® supply checked at a qualified specialist workshop before making journeys outside of Europe. Before a longer stay outside of Europe, consult a qualified specialist workshop.

AdBlue® range and fill level

The AdBlue® fill level and range can be displayed via the on-board computer. The AdBlue® range shown depends strongly on the driving style and operating conditions. The actual range can therefore deviate from the range currently displayed in the on-board computer. The information supplied in the Owner's Manual regarding the reserve quantity at the first display warning and on the minimum top-up quantity when the tank is empty is also to be understood as guide values.

Display the AdBlue® range and level (→ page 273).

Engine oil

Notes on engine oil

Observe the notes on operating fluids (→ page 523).



! **NOTE** Engine damage caused by an incorrect oil filter, incorrect oil or additives

▶ Do not use engine oils or oil filters which do not correspond to the specifi-

cations explicitly prescribed for the service intervals.

- ▶ Do not alter the engine oil or oil filter in order to achieve longer change intervals than prescribed.
- ▶ Do not use additives.
- ▶ Have the engine oil renewed at regular intervals.

Mercedes-Benz recommends that you have the oil change carried out at a qualified specialist workshop.

Only Mercedes-Benz approved engine oils may be used in Mercedes-Benz engines.

Further information on engine oil and oil filters is available at the following locations:

- in the Mercedes-Benz Specifications for Operating Fluids by entering the designation
  - at https://bevo.mercedes-benz.com
  - in the Mercedes-Benz BeVo app
- at a qualified specialist workshop

Petrol engines: for certain countries, different engine oils can be used in conjunction with reduced maintenance intervals.

ⓘ Further information on different engine oils can be obtained at a qualified specialist workshop.

Quality and capacity of engine oil

MB-Freigabe or MB-Approval

Petrol engines	Engine oil specifications
All models	229.51, 229.52, 229.61 229.71*

MB-Freigabe or MB-Approval

Diesel engines	Engine oil specifications
A 160 d A 180 d	226.51, 229.31, 229.51, 229.52, 229.61 229.71*
All other models	228.51, 229.31, 229.51, 229.52, 229.61 229.71*

* recommended for lowest possible fuel consumption (lowest SAE viscosity class in each case; observe possible restrictions of the approved SAE viscosity classes)

To achieve the lowest possible fuel consumption, it is recommended to use the engine oil specifications marked in the table for the lowest SAE viscosity class. Possible restrictions of the approved SAE viscosity classes must be observed.

ⓘ If the engine oils listed in the table are not available, you may add a maximum of 1.0 litre of the following engine oils once only.

Engine oils for one-time filling only in exceptional cases:

- **petrol engines:** MB-Freigabe or MB-Approval 229.31 or ACEA C3
- **diesel engines:** ACEA C3

The following values refer to an oil change, including the oil filter.

Replacement amount

Model	Replacement amount
A 160 A 180 A 200	5.1 litres
A 200 d A 200 d 4MATIC A 220 d A 220 d 4MATIC	6.8 litres
All other models	5.5 litres

Notes on brake fluid

Observe the notes on operating fluids (→ page 523).

⚠ WARNING Risk of an accident due to vapour pockets forming in the brake system

The brake fluid constantly absorbs moisture from the air. This lowers the boiling point of the brake fluid. If the boiling point is too low, vapour pockets may form in the brake system when the brakes are applied hard.

This impairs the braking effect.

▶ Have the brake fluid renewed at the specified intervals.

Have the brake fluid regularly replaced at a qualified specialist workshop.
Only use brake fluid approved by Mercedes-Benz according to MB-Freigabe or MB-Approval 331.0.

You can obtain further information on brake fluid in the following places:

- in the Mercedes-Benz Specifications for Operating Fluids
  - at https://bevo.mercedes-benz.com
  - in the Mercedes-Benz BeVo app
- at a qualified specialist workshop

Coolant

Notes on coolant

Observe the notes on operating fluids (→ page 523).

⚠ WARNING Risk of fire- and injury from antifreeze

If antifreeze comes into contact with hot component parts in the engine compartment, it may ignite.

- ▶ Allow the engine to cool down before you top up the antifreeze.
- ▶ Make sure that no antifreeze spills out next to the filler opening.
- ▶ Thoroughly clean the antifreeze from component parts before starting the vehicle.

! NOTE Damage caused by incorrect coolant

- ▶ Only add coolant that has been premixed with the required antifreeze protection.

Information on coolant is available at the following locations:

- in the Mercedes-Benz Specifications for Operating Fluids 310.1
  - at https://bevo.mercedes-benz.com
  - in the Mercedes-Benz BeVo App
- at a qualified specialist workshop

! NOTE Overheating at high outside temperatures

If an inappropriate coolant is used, the engine cooling system is not sufficiently protected against overheating and corrosion at high outside temperatures.

- ▶ Always use coolant approved by Mercedes-Benz.
- ▶ Observe the instructions in the Mercedes-Benz Specifications for Operating Fluids310.1 .

Have the coolant regularly replaced at a qualified specialist workshop.

The proportion of corrosion inhibitor/antifreeze concentrate in the engine cooling system should be:

- a minimum of 50% (antifreeze protection down to approximately -37 °C)
- a maximum of 55% (antifreeze protection down to -45 °C)

Notes on windscreen washer fluid

Observe the notes on operating fluids (→ page 523).

⚠ WARNING - Risk of fire and injury due to windscreen washer concentrate

Windscreen washer concentrate is highly flammable. It could ignite if it comes into

contact with hot engine component parts or the exhaust system.

- Make sure that no windscreen washer concentrate spills out next to the filler opening.

! NOTE Damage to the exterior lighting due to unsuitable windscreen washer fluid

Unsuitable windscreen washer fluids may damage the plastic surface of the exterior lighting.

- Only use windscreen washer fluids which are also suitable for use on plastic surfaces, e.g. MB SummerFit or MB WinterFit.

! NOTE Blocked spray nozzles caused by mixing windscreen washer fluids

- Do not mix MB SummerFit and MB WinterFit with other windscreen washer fluids.

Do not use distilled or de-ionised water as the fill level sensor may be triggered erroneously.

Recommended windscreen washer fluid:

- Above freezing point: e.g. MB SummerFit
- Below freezing point: e.g. MB WinterFit

For the correct mixing ratio, refer to the information on the antifreeze container.

Mix the washer fluid with the windscreen washer fluid all year round.

Vehicle data

Vehicle dimensions

The heights specified may vary as a result of the following factors:

- tyres
- load
- condition of the suspension
- optional equipment

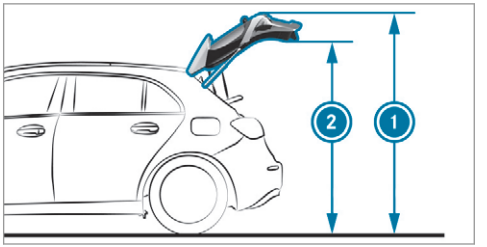

Height when opened and headroom

Model	1 Height when opened	2 Headroom
A 220 d 4MATIC	2017 mm	1871 mm
A 200 d 4MATIC	2012 mm	1866 mm

Model	① Height when opened	② Headroom
A 220 d A 220 4MATIC A 250 A 250 4MATIC	2002 mm	1856 mm
All other models	1997 mm	1851 mm

Vehicle dimensions

All models	
Vehicle length	4419 mm
Vehicle width including outside mirrors	1992 mm
Vehicle width excluding outside mirrors	1796 mm
Wheelbase	2729 mm

Vehicle height

Model	
A 220 d 4MATIC	1460 mm
A 200 d 4MATIC	1455 mm
A 220 d A 220 4MATIC A 250 A 250 4MATIC	1445 mm
All other models	1440 mm

Weights and loads

Please observe the following notes for the specified vehicle data:

- Items of optional equipment increase the unladen weight and reduce the payload.
- Vehicle-specific weight information can be found on the vehicle identification plate (→ page 521).

Roof load

All models	
Maximum roof load	75 kg

Trailer hitch

General notes on the trailer hitch

Modifications to the engine cooling system may be necessary, depending on the vehicle model. The retrofitting of a trailer hitch is only permissible if a towing capacity is specified in your vehicle documents.

Further information can be obtained at a qualified specialist workshop.

Mounting dimensions of the trailer hitch

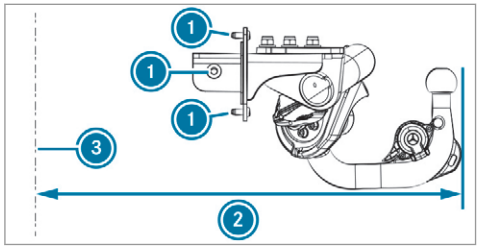

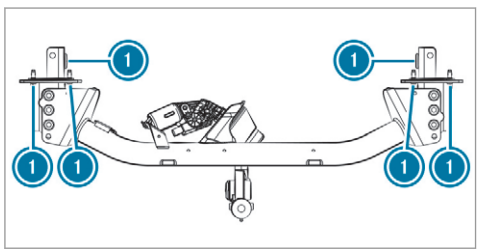

1 Fastening points
2 Overhang dimension
3 Rear axle centre line

The overhang dimension and fastening points are valid for a trailer hitch installed at the factory.

Model	2 Overhang dimension
All models	888 mm

Towing capacity

The tongue weight is not included in the towing capacity.

Towing capacity, braked (at a minimum start-off gradeability of 8%)

Model	Towing capacity, braked
A 160 A 160 d	1500 kg
A 180 A 180 d	1600 kg
A 200 d 4MATIC A 220 4MATIC A 220 d 4MATIC A 250 4MATIC	2000 kg
All other models	1800 kg

Towing capacity, braked (at a minimum start-off gradeability of 12%)

Model	Towing capacity, braked
A 160 A 160 d	1300 kg
A 180 A 180 d	1400 kg

Model	Towing capacity, braked
A 200 d 4MATIC A 220 4MATIC A 220 d 4MATIC A 250 4MATIC	1800 kg
All other models	1600 kg

Towing capacity, unbraked

Model	Towing capacity, unbraked
A 160 A 180 (manual transmission) A 200 (manual transmission)	675 kg
A 160 d A 180 d	710 kg
A 180 (automatic transmission)	680 kg
A 200 (automatic transmission)	685 kg
A 180 d (automatic transmission)	720 kg
A 250	725 kg
A 200 d	745 kg
All other models	750 kg

Maximum tongue weight

NOTE Damage caused by the trailer coming loose

If the tongue weight used is too low, the trailer may come loose.

- The tongue weight must not be below 50 kg.
- Use a tongue weight that is as close as possible to the maximum permissible tongue weight.

Maximum tongue weight

Model	
All models	80 kg

Permissible rear axle load (trailer operation)

Axle load

Model	Axle load
A 160	980 kg
A 180 (manual transmission) A 200 (manual transmission)	995 kg

Model	Axle load
A 180 d (automatic transmission)	1000 kg
A 160 d A 180 d (manual transmission)	1005 kg
A 200 d A 220 d	1015 kg
A 200 d 4MATIC	1065 kg
A 220 4MATIC	1025 kg
A 220 d 4MATIC	1050 kg
A 250 4MATIC	1030 kg
All other models	990 kg

Display messages

Introduction

Notes on display messages

Display messages appear on the multifunction display.

Display messages with graphic symbols are simplified in the Owner's Manual and may differ from the symbols on the multifunction display. The multifunction display shows high-priority display messages in red. Certain display messages are accompanied by a warning tone.

Please act in accordance with the display messages and follow the additional notes in the Owner's Manual.

For some display messages, a symbol will also be shown:

- ⓘ Further information
- × Hide display message

You can select the desired symbol by swiping left or right on the left-hand Touch Control. Press the ⓘ symbol to show further information on the multifunction display. Press the × symbol to hide the display message.

You can hide low-priority display messages by pressing the button or the left-hand Touch Control. The display messages will then be stored in the message memory.

Rectify the cause of a display message as quickly as possible.

High-priority display messages cannot be hidden. The multifunction display shows these display messages continuously until the cause of the display message has been rectified.

Calling up stored display messages

On-board computer:

Service ▸▸ 1 message

If there are no display messages, No messages will appear on the multifunction display.

- Scroll through the display messages by swiping upwards or downwards on the left-hand Touch Control.
- **To exit the message memory:** press the button.

Occupant safety

Display messages	Possible causes/consequences and ▶ Solutions
 Restraint sys. malfunction Consult workshop	* The restraint system is malfunctioning (→ page 37). **⚠ WARNING** Risk of injury due to malfunctions in the restraint system If the restraint system is malfunctioning, restraint system components may be triggered unintentionally or may not deploy as intended during an accident. This may affect the seat belt tensioner or airbag, for example. ▶ Have the restraint system checked and repaired immediately at a qualified specialist workshop. Recognition of a restraint system fault: • The restraint system warning lamp does not light up when the ignition is switched on. • The restraint system warning lamp lights up continuously or repeatedly during a journey. ▶ Consult a qualified specialist workshop immediately.
 Front left malfunction Consult workshop (example)	* The corresponding restraint system is malfunctioning (→ page 37). **⚠ WARNING** Risk of injury due to malfunctions in the restraint system If the restraint system is malfunctioning, restraint system components may be triggered unintentionally or may not deploy as intended during an accident. This may affect the seat belt tensioner or airbag, for example. ▶ Have the restraint system checked and repaired immediately at a qualified specialist workshop.

Display messages	Possible causes/consequences and ▶ Solutions
	Recognition of a restraint system fault: • The restraint system warning lamp does not light up when the ignition is switched on. • The restraint system warning lamp lights up continuously or repeatedly during a journey. ▶ Consult a qualified specialist workshop immediately.
 Left windowbag malfunction Consult workshop (example)	* The corresponding window airbag is malfunctioning (→ page 37). **⚠ WARNING** Risk of injury or fatal injury due to a malfunction in the window airbag The window airbag might be triggered unintentionally or might not be triggered at all in the event of an accident with high deceleration. ▶ Have the window airbag checked and repaired immediately at a qualified specialist workshop. ▶ Consult a qualified specialist workshop immediately.
Front-passenger airbag disabled See Owner's Manual	* The front passenger airbag has been disabled even though an adult or a person with an adult stature is on the front passenger seat. If additional forces are applied to the seat, the weight the system detects may be too low. **⚠ WARNING** - Risk of injury or even fatal injury when the front passenger airbag is disabled If the front passenger airbag is disabled, It will not be deployed in the event of an accident and cannot perform its intended protective function.

Display messages	Possible causes/consequences and ▶ Solutions
	A person in the front passenger seat could then, for example, come into contact with the vehicle interior, especially if the person is sitting too close to the dashboard. ▶ Be aware of the status of the front passenger airbag both before and during the journey. ▶ Stop the vehicle immediately in accordance with the traffic conditions. ▶ Check the status of the automatic front passenger airbag actuation (⟶ page 48). ▶ If necessary, consult a qualified specialist workshop immediately.
Front-passenger airbag enabled See Owner's Manual	* The front passenger airbag is enabled while the vehicle is in motion: • even when a child, a small adult or an object weighing less than the system weight threshold is located on the front passenger seat • even when the front passenger seat is not occupied The system may detect objects or forces that are adding to the weight applied to the seat. ⚠ **WARNING** Risk of injury or fatal injury if a child restraint system is used while the front passenger front airbag is enabled If you secure a child in a child restraint system on the front passenger seat and the front passenger airbag is enabled, the front passenger airbag can deploy in the event of an accident. The child could be struck by the airbag. ▶ Ensure, both before and during the journey, that the status of the front passenger airbag is correct.

Display messages	Possible causes/consequences and ▶ Solutions
	NEVER use a rearward facing child restraint on a seat protected by an ACTIVE AIRBAG in front of it, DEATH or SERIOUS INJURY to the CHILD can occur. ▶ Stop the vehicle immediately in accordance with the traffic conditions. ▶ Check the status of the automatic front passenger airbag actuation (→ page 48). ▶ If necessary, consult a qualified specialist workshop immediately.
PRE-SAFE inoperative See Owner's Manual	* The PRE-SAFE® functions are malfunctioning. ▶ Consult a qualified specialist workshop.

Key

Display messages	Possible causes/consequences and ▶ Solutions
 Replace key See Owner's Manual	* **Vehicles with a digital vehicle key :** only a few or no authorisations remain for starting the engine. ▶ Make sure that the internet connection is not restricted by certain mobile phone settings. ▶ Open Mercedes me connect https://www.mercedes.me and call up the Digital Vehicle Key service. ▶ Deactivate the service first and then activate it again. ▶ If the display message still appears, contact the Mercedes-Benz Customer Assistance Center (CAC). * **Vehicles with a digital vehicle key sticker:** only a few or no authorisations remain for starting the engine.

Display messages	Possible causes/consequences and ▶ Solutions
	▶ Order a new digital vehicle key sticker from a Mercedes-Benz Service Centre or at https://www.mercedes-benz.com/connect.
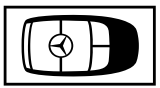 Replace key	* The key needs to be replaced. ▶ Consult a qualified specialist workshop.
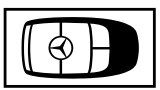 Change key batteries	* The key battery is discharged. ▶ Replace the battery (→ page 80).
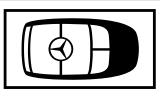 Key not detected (white display message)	* The key is currently undetected. ▶ Change the location of the key in the vehicle. ▶ If the key is still not recognised, place it in the slot for starting with the key (→ page 167).

Display messages	Possible causes/consequences and ▶ Solutions
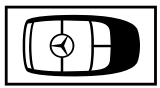 Key not detected (red display message)	* The key cannot be detected and may no longer be in the vehicle. The key is no longer in the vehicle and you switch off the engine: • You can no longer start the engine. • You cannot centrally lock the vehicle. ▶ Ensure that the key is in the vehicle. If the key detection function has a malfunction due to a strong radio signal source: ▶ Stop the vehicle immediately in accordance with the traffic conditions. ▶ Place the key in the slot for starting the engine with the key (→ page 167).
Place the key in the marked space See Owner's Manual	* Key detection is malfunctioning. ▶ Change the location of the key in the vehicle. ▶ Place the key in the slot for starting the engine with the key (→ page 167).

Lights

Display messages	Possible causes/consequences and ▶ Solutions
 Left dipped beam (example)	* The corresponding light source is defective. ▶ Drive on carefully. ▶ Consult a qualified specialist workshop immediately. or ▶ Check whether you are permitted to replace the light source yourself (→ page 144). ⓘ LED light bulbs: the display message for the corresponding lamp appears only when all the light-emitting diodes in the lamp are faulty.
 Malfunction See Owner's Manual	* The exterior lighting is malfunctioning. ▶ Consult a qualified specialist workshop. * **Vehicles with a trailer hitch:** a fuse may have blown. ▶ Stop the vehicle in accordance with the traffic conditions. ▶ Check the fuses and replace them if necessary (→ page 490).
 Automatic driving lights inoperative	* The light sensor is malfunctioning. ▶ Consult a qualified specialist workshop.

Display messages	Possible causes/consequences and ▶ Solutions
 Active Light System inoperative	* The active headlamps are malfunctioning. ▶ Consult a qualified specialist workshop.
 Switch on headlamps	* You are driving without low-beam headlamps. ▶ Turn the light switch to the ≡D or AUTO position.
 Switch off lights	* You are leaving the vehicle and the lights are still switched on. ▶ Turn the light switch to the AUTO position.
 Intelligent Light System inoperative	* The Intelligent Light System is faulty. The lighting system continues to function properly without the functions of the Intelligent Light System. ▶ Consult a qualified specialist workshop.

Display messages	Possible causes/consequences and ▶ Solutions
Adaptive Highbeam Assist currently unavailable See Owner's Manual	* Adaptive Highbeam Assist is temporarily unavailable. The system limits have been reached (⟶ page 139). ▶ Drive on. Once the cause of the problem is no longer present, the system will be available again. The Adaptive Highbeam Assist available again display message will appear.
Adaptive Highbeam Assist inoperative	* Adaptive Highbeam Assist is malfunctioning. ▶ Consult a qualified specialist workshop.
Adaptive Highbeam Assist Plus currently unavailable See Owner's Manual	* Adaptive Highbeam Assist Plus is temporarily unavailable. The system limits have been reached (⟶ page 140). ▶ Drive on. Once the cause of the problem is no longer present, the system will be available again. The Adaptive Highbeam Assist Plus available again display message will appear.
Adaptive Highbeam Assist Plus inoperative	* Adaptive Highbeam Assist Plus is malfunctioning. ▶ Consult a qualified specialist workshop.
Hazard warning lamps malfunctioning	* The hazard warning lamp switch is malfunctioning. ▶ Consult a qualified specialist workshop.

Climate control

Display messages	Possible causes/consequences and ▶ Solutions
 inoperative See Owner's Man.	* The stationary heater is temporarily malfunctioning. ▶ When the vehicle is stationary on a level surface and the engine has cooled down, make up to four attempts to switch on the stationary heater, waiting several minutes between each attempt. ▶ If the stationary heater does not switch on, consult a qualified specialist workshop.
 inoperative Battery low	* The on-board electrical system voltage is too low. The stationary heater has switched itself off. ▶ Drive an extended distance until the battery has reached a sufficient charge level again.
 inoperative Refuel vehicle	* There is too little fuel in the fuel tank. The stationary heater cannot be switched on. ▶ Refuel the vehicle.

Vehicle

Display messages	Possible causes/consequences and ▶ Solutions
 Vehicle is operational Switch off ignition before exiting	* You are leaving the vehicle when it is in a ready-to-drive state. ▶ When you leave the vehicle, switch off the ignition, secure the vehicle against rolling away and take the key with you. ▶ If you do not leave the vehicle, switch off the electrical consumers, e.g. the seat heating. Otherwise, the 12 V battery may discharge and it will then be possible to start the vehicle only with the aid of a second battery (starting assistance).
 Check trailer hitch lock (white display message)	* The trailer hitch is not operational during a journey with a trailer. ▶ Stop the vehicle immediately in accordance with the traffic conditions and switch off the engine. ▶ Uncouple the trailer and secure it against rolling away. ▶ To initiate a new swivel movement, press and hold the button on the tailgate until the ball neck engages beneath the bumper (→ page 261). ▶ When the display message disappears, couple up the trailer and drive on. ⚠ **WARNING** Risk of an accident if the ball neck is not locked If the ball neck is not in the locked position, the trailer may come loose. ▶ Pull over and stop the vehicle safely as soon as possible, paying attention to road and traffic conditions. Do not continue driving under any circumstances. ▶ Uncouple the trailer and secure it against rolling away.

Display messages	Possible causes/consequences and ▶ Solutions
	▶ Initiate a new swivelling procedure and do not re-couple the trailer until the display message disappears. If the display message does not disappear, the trailer hitch is malfunctioning and the ball neck is not locked. ▶ Do not couple up the trailer. Drive on without the trailer. Note the reduced ground clearance due to the unlocked ball neck. ▶ Consult a qualified specialist workshop. * The trailer hitch will not be operational when the vehicle is stationary. ▶ Uncouple the coupled trailer and secure it against rolling away. ▶ **If the ball neck is retracted:** to initiate a new swivel movement, press and hold the button on the tailgate until the ball neck engages vertically in the locked position and then engages beneath the bumper (→ page 261). ▶ **If the ball neck is extended:** press and hold the button on the tailgate until the ball neck engages beneath the bumper. If the display message does not disappear, the trailer hitch is malfunctioning and the ball neck is not locked. ▶ Do not couple up the trailer. Drive on without the trailer. Note the reduced ground clearance due to the unlocked ball neck. ▶ Consult a qualified specialist workshop.

Display messages	Possible causes/consequences and ▶ Solutions
 Operation only possible in transmission position N	* **Vehicles with manual transmission:** you attempted to swivel the ball neck and the transmission is not in neutral N. ▶ Shift the transmission to neutral N.
 Steering malfunction Increased physical effort See Owner's Manual	* The power steering assistance is malfunctioning. **⚠ WARNING** Risk of an accident due to altered steering characteristics If the power assistance of the steering fails partially or completely, you will need to use more force to steer. ▶ If safe steering is possible, drive on carefully. ▶ Visit or consult a qualified specialist workshop immediately. ▶ If safe steering is possible, drive on carefully. ▶ Visit or consult a qualified specialist workshop immediately.
 Steering malfunction Stop immediately See Owner's Manual	* The steering is malfunctioning. Steering capability is significantly impaired. **⚠ WARNING** Risk of accident if steering capability is impaired If the steering does not function as intended, the vehicle's operating safety is jeopardised.

Display messages	Possible causes/consequences and ▶ Solutions
	▶ Pull over and stop the vehicle safely as soon as possible, paying attention to road and traffic conditions. Do not continue driving under any circumstances. ▶ Consult a qualified specialist workshop. ▶ Stop the vehicle immediately in accordance with the traffic conditions. Do not continue driving. ▶ Consult a qualified specialist workshop.
 Steering malfunction See Owner's Manual	* The electric steering lock is malfunctioning. The steering may be locked by the electric steering lock. ⚠ **WARNING** Risk of accident if steering capability is impaired If the steering does not function as intended, the vehicle's operating safety is jeopardised. ▶ Pull over and stop the vehicle safely as soon as possible, paying attention to road and traffic conditions. Do not continue driving under any circumstances. ▶ Consult a qualified specialist workshop. ▶ Stop the vehicle immediately in accordance with the traffic conditions. Do not continue driving. ▶ Consult a qualified specialist workshop.

Display messages	Possible causes/consequences and ▶ Solutions
 Before starting the engine, turn the steering wheel.	* The electric steering lock could not unlock the steering. ▶ Switch the ignition off. ▶ To unlock the steering, move the steering wheel slightly to the left and right. ▶ Switch the ignition back on.
Active bonnet malfunction See Owner's Manual	* The active bonnet (pedestrian protection) is malfunctioning or inoperative after having already been triggered. ▶ Consult a qualified specialist workshop.
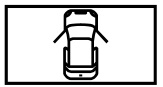	* At least one door is open. ▶ Close all doors.
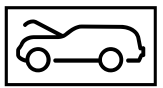	* The bonnet is open. **⚠ WARNING** Risk of accident due to driving with the engine bonnet unlocked An unlocked engine bonnet may open up when the vehicle is in motion and block your view. ▶ Never unlock the engine bonnet when driving. ▶ Before every trip, ensure that the engine bonnet is locked. ▶ Stop the vehicle immediately, paying attention to road and traffic conditions. ▶ Close the bonnet.

Display messages	Possible causes/consequences and ▶ Solutions
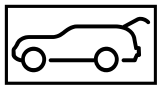	* The tailgate is open. **⚠ DANGER** Risk of exhaust gas poisoning Combustion engines emit poisonous exhaust gases such as carbon monoxide. Exhaust gases can enter the vehicle interior if the tailgate is open when the engine is running, especially if the vehicle is in motion. ▶ Always switch off the engine before opening the tailgate. ▶ Never drive with the tailgate open. ▶ Close the tailgate.
Anti-theft alarm system Malfunction	* The anti-theft alarm system is malfunctioning. ▶ Consult a qualified specialist workshop.
 Top up washer fluid	* The washer fluid level in the washer fluid reservoir has dropped below the minimum. ▶ Top up the washer fluid (→ page 460).

Engine

Display messages	Possible causes/consequences and ▶ Solutions
 Top up coolant See Owner's Manual	* The coolant level is too low. **! NOTE** Engine damage due to insufficient coolant ▶ Avoid long journeys with insufficient coolant. ▶ Add coolant (→ page 460). ▶ Have the engine cooling system checked at a qualified specialist workshop.
 Coolant Stop vehicle Switch engine off	* The coolant is too hot. ▶ Stop the vehicle immediately in accordance with the traffic conditions and switch off the engine. **⚠ WARNING** Danger of burns when opening the bonnet If you open the engine bonnet when the engine has overheated or during a fire in the engine compartment, you could come into contact with hot gases or other escaping operating fluids. ▶ Before opening the bonnet, allow the engine to cool down. ▶ In the event of a fire in the engine compartment, keep the engine bonnet closed and call the fire service. ▶ Wait until the engine has cooled down. ▶ Make sure that the air supply to the radiator is not impaired.

Display messages	Possible causes/consequences and ▶ Solutions
	▶ Avoiding high loads on the engine, drive to the nearest qualified specialist workshop. In doing so, ensure that the coolant temperature display remains below 120 °C.
	* The fan motor is defective. ▶ Avoiding high loads on the engine, drive to the nearest qualified specialist workshop. In doing so, ensure that the coolant temperature display remains below 120 °C.
To switch off the engine, press the Start/Stop button for at least 3 seconds or 3 times.	* You have pressed the start/stop button while driving. ▶ Information about switching off the engine while driving (→ page 165).
 Reserve fuel level	* The fuel supply has dropped into the reserve range. ▶ Refuel.
 Clean the fuel filter	* **Vehicles with diesel engines:** the fuel filter is dirty or the water in the fuel filter needs to be drained. ▶ Consult a qualified specialist workshop.

Display messages	Possible causes/consequences and ▶ Solutions
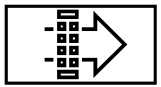 Replace air cleaner	* **Vehicles with diesel engines:** the engine air filter is dirty and must be replaced. ▶ Consult a qualified specialist workshop.
Drive system Malfunction Visit workshop	* The drive system is malfunctioning. ▶ Consult a qualified specialist workshop.
Drive system Malfunction Stop Switch engine off	* The drive system is malfunctioning. ▶ Stop the vehicle immediately in accordance with the traffic conditions and switch off the engine. ▶ Consult a qualified specialist workshop.

Transmission

Display messages	Possible causes/consequences and ▶ Solutions
Apply brake to deselect Park (P) position	* You have attempted to shift the transmission out of park position P and into another transmission position. ▶ Depress the brake pedal. ▶ Select transmission position D, R or neutral N.

Display messages	Possible causes/consequences and ▶ Solutions
To shift out of P or N, depress brake and start engine	* You have attempted to shift the transmission out of park position P or neutral N and into another transmission position. ▶ Depress the brake pedal. ▶ Change the transmission position. ▶ Start the engine.
Only select Park (P) when vehicle is stationary	* Park position P can be engaged only when the vehicle is stationary. ▶ To stop, depress the brake pedal. ▶ Shift the transmission to park position P while the vehicle is stationary.
Apply brake to select R	* You have attempted to select transmission position R. ▶ Depress the brake pedal. ▶ Select transmission position R.
Risk of vehicle rolling Driver door open and transmission not in P	* The driver's door is not fully closed and transmission position D, R or neutral N is selected. ▶ Select park position P when switching off the vehicle.
N permanently active Risk of vehicle rolling	* While the vehicle is rolling or while you are driving, neutral N has been engaged. ▶ To stop, depress the brake pedal. ▶ Shift the transmission to park position P while the vehicle is stationary. ▶ To continue driving, select transmission position D or R.

Display messages	Possible causes/consequences and ▶ Solutions
Without changing gear, consult workshop	* The transmission is malfunctioning. The transmission position can no longer be changed. ▶ When transmission position D is selected, consult a qualified specialist workshop and do not change the transmission position. ▶ For all other transmission positions, park the vehicle safely. ▶ Consult a qualified specialist workshop.
Reversing not poss. Consult workshop	* The transmission is malfunctioning. The transmission position R cannot be selected. ▶ Consult a qualified specialist workshop.
Transmission Malfunction Stop	* The transmission is malfunctioning. The transmission shifts to neutral N automatically. ▶ Stop the vehicle immediately in accordance with the traffic conditions. ▶ Depress the brake pedal. ▶ Engage park position P. ▶ Consult a qualified specialist workshop.
Auxiliary battery malfunction	* The auxiliary battery for the transmission is no longer being charged. ▶ Consult a qualified specialist workshop. ▶ Until then, always select park position P manually before you switch off the engine. ▶ Before leaving the vehicle, apply the electric parking brake.
Transmission Malfunction	* The transmission is malfunctioning. The cause could be an overheated clutch or blocked gears. ▶ Let the transmission cool down.

Display messages	Possible causes/consequences and ▶ Solutions
	▶ If the display message still appears following a restart, consult a qualified specialist workshop.
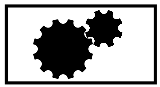 Trans. oil overheated Drive on with care	* The transmission is overheating. When the display message is active, start-up and driving characteristics may be temporarily impaired. ▶ Drive at low engine speeds. ▶ Avoid sporty driving. ▶ Before pulling away on uphill gradients, let the transmission cool down until the display message disappears.
Parking lock inoperative Apply the parking brake	* The transmission is malfunctioning. The park position P cannot be selected. ▶ Park the vehicle safely. ▶ Use the electric parking brake to secure the vehicle against rolling away.
Teaching in transmission Operate selector lever Brake for XX seconds Risk of vehicle rolling	* The transmission is being taught in. There is a risk of the vehicle rolling. ▶ Depress and hold the brake pedal until the teach-in process has been completed. The electric parking brake is also applied automatically during the teach-in process. ▶ Switch on the ignition. ▶ Select park position P, transmission position R or neutral N.
Risk of vehicle rolling away Apply parking brake See Owner's Manual	* The transmission position cannot be reliably identified. ▶ Use the electric parking brake to secure the vehicle against rolling away.

Display messages	Possible causes/consequences and ▶ Solutions
Teaching in transmission complete	* The transmission's teach-in process is complete. All transmission positions can be selected again.
Transmission Malfunction Visit workshop	* The transmission is malfunctioning. Consult a qualified specialist workshop.
Depress clutch fully to start engine	* You have attempted to start the engine without depressing the clutch pedal. ▶ Depress the clutch pedal and then start the engine. * The engine has stalled while the vehicle was pulling away, e.g. because the clutch pedal was released too quickly. ▶ Depress the clutch pedal again. The engine will start automatically. ▶ Slowly release the clutch pedal to pull away.
Clutch overheated Avoid pulling away for XX:XX mins	* The clutch is under considerable load and is overheating. Avoid frequent pulling away and driving at walking pace over longer distances. ▶ Stop the vehicle, paying attention to road and traffic conditions, and leave the engine running. The clutch will cool more quickly when the engine is running. or ▶ If possible, continue driving at a steady speed and remove your foot from the clutch pedal. Do not ride the clutch. The clutch will cool while the vehicle is in motion. When the clutch has cooled down, the display message will disappear.

Brakes

Display messages	Possible causes/consequences and ▶ Solutions
 Parking brake See Owner's Manual	* The yellow (P) indicator lamp is lit. The electric parking brake is malfunctioning. **To apply:** ▶ Switch the ignition off and switch it back on. ▶ Apply the electric parking brake manually (→ page 199). If it is not possible to apply the electric parking brake: ▶ Consult a qualified specialist workshop. ▶ Where necessary, also secure the parked vehicle against rolling away. * The yellow (P) indicator lamp and the red (P) indicator lamp are lit. The electric parking brake is malfunctioning. **To release:** ▶ Switch the ignition off and switch it back on. ▶ Release the electric parking brake manually (→ page 199). or ▶ Release the electric parking brake automatically (→ page 198). If it is still not possible to release the electric parking brake: ▶ Do not continue driving. Consult a qualified specialist workshop.

Display messages	Possible causes/consequences and ▶ Solutions
	* The yellow (P) indicator lamp is lit and the red (P) indicator lamp is flashing. The electric parking brake is malfunctioning. The electric parking brake could not be applied or released. ▶ Switch the ignition off and switch it back on. **To apply:** ▶ Release and then apply the electric parking brake manually (→ page 199). **To release:** ▶ Apply and then release the electric parking brake manually. If it is not possible to apply the electric parking brake or the red (P) indicator lamp continues to flash: ▶ Do not continue driving. Consult a qualified specialist workshop. ▶ Where necessary, also secure the parked vehicle against rolling away. * The yellow (P) indicator lamp is lit and the red (P) indicator lamp flashes for approximately ten seconds after the electric parking brake has been applied or released. It then remains lit or goes out. The electric parking brake is malfunctioning. **If the battery charge level is too low:** ▶ Charge the battery. **To apply:**

Display messages	Possible causes/consequences and ▶ Solutions
	▶ Switch the ignition off. The electric parking brake will be applied automatically. If the electric parking brake is not to be applied, e.g. at an automatic car wash or when the vehicle is being towed, leave the ignition switched on. This does not include having the vehicle towed with the rear axle raised. If the electric parking brake is not applied automatically: ▶ Switch the ignition off and switch it back on. ▶ Release and then apply the electric parking brake manually (→ page 199). If it is still not possible to apply the electric parking brake: ▶ Consult a qualified specialist workshop. ▶ Where necessary, also secure the parked vehicle against rolling away. **To release:** ▶ If the conditions for automatic release are fulfilled and the electric parking brake is not released automatically, release the electric parking brake manually (→ page 199). If it is still not possible to release the electric parking brake: ▶ Do not continue driving. Consult a qualified specialist workshop.

Display messages	Possible causes/consequences and ▶ Solutions
 Release parking brake	* The red Ⓟ indicator lamp is flashing. The electric parking brake is applied while you are driving: • A condition for automatic release of the electric parking brake has not been fulfilled (→ page 198). • You are performing emergency braking using the electric parking brake (→ page 199). ▶ Check the conditions for automatic release of the electric parking brake. ▶ Release the electric parking brake manually.
 Turn on the ignition to release the parking brake	* The red Ⓟ indicator lamp is lit. You have attempted to release the electric parking brake with the ignition switched off. ▶ Switch on the ignition.
Risk of vehicle rolling away Parking brake not applied See Owner's Manual	* **Vehicles with manual transmission:** the electric parking brake has not been applied and you open the driver's door. ▶ Apply the electric parking brake.
 Brake immediately	* **Vehicles with manual transmission:** a malfunction has occurred while the HOLD function was activated. A tone may also sound at regular intervals. If you attempt to lock the vehicle, the tone will become louder. You cannot start the engine.

Display messages	Possible causes/consequences and ▶ Solutions
	▶ Immediately depress the brake pedal firmly until the display message disappears. You can restart the engine.
 Check brake fluid level	* There is insufficient brake fluid in the brake fluid reservoir. ⚠ **WARNING** Risk of an accident due to low brake fluid level If the brake fluid level is too low, the braking effect and the braking characteristics may be impaired. ▶ Stop the vehicle as soon as possible, paying attention to road and traffic conditions. Do not continue driving. ▶ Consult a qualified specialist workshop. ▶ Do not top up the brake fluid. ▶ Stop the vehicle immediately in accordance with the traffic conditions. Do not continue driving. ▶ Do not top up the brake fluid. ▶ Consult a qualified specialist workshop.
 Check brake pads See Owner's Manual	* The brakepads have reached the wear limit. ⚠ **WARNING** Risk of accident due to restricted braking power When the brake pads have reached their wear limit, the braking power may be restricted. ▶ Drive on carefully.

Display messages	Possible causes/consequences and ▶ Solutions
	▶ Have the brake system checked immediately at a qualified specialist workshop. ▶ Consult a qualified specialist workshop.

Driving systems

Display messages	Possible causes/consequences and ▶ Solutions
 ATTENTION ASSIST inoperative	* ATTENTION ASSIST is malfunctioning. ▶ Consult a qualified specialist workshop.
 ATTENTION ASSIST: Take a break!	* ATTENTION ASSIST has detected fatigue or an increasing lack of concentration on the part of the driver (→ page 250). ▶ If necessary, take a break.

Display messages	Possible causes/consequences and ▶ Solutions
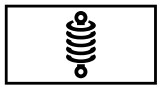 Fault Drive at max. 80 km/h	* The adjustable damping is malfunctioning. The vehicle's handling characteristics may be affected. ▶ Do not drive at speeds greater than 80 km/h. ▶ Consult a qualified specialist workshop.
Active Steering Assist currently unavailable See Owner's Manual	* Active Steering Assist is temporarily unavailable. The ambient conditions are outside the system limits (→ page 223). ▶ Drive on. As soon as the ambient conditions are within the system limits, the system will become available again. ▶ If necessary, clean the windscreen in the camera's field of vision. ▶ Check the tyre pressure if necessary.
Active Steering Assist inoperative	* Active Steering Assist is malfunctioning. Active Distance Assist DISTRONIC remains available. ▶ Consult a qualified specialist workshop.
	* Active Steering Assist has reached the system limits(→ page 223). You have not steered independently for a considerable period of time. ▶ Take over the steering and drive on in accordance with the traffic conditions.
Beginning emergency stop	* Your hands are not on the steering wheel. An emergency stop is initiated (→ page 226). ▶ Put your hands back on the steering wheel.

Display messages	Possible causes/consequences and ▶ Solutions
	You can cancel the deceleration at any time by performing one of the following actions: • steering • braking or accelerating • pressing a steering-wheel button • operating Touch Control • deactivating Active Distance Assist DISTRONIC
Active Steering Assist currently unavailable due to multiple emergency stops	* Active Steering Assist is temporarily unavailable due to multiple emergency stops. ▶ Take over the steering and stop in accordance with the traffic conditions. ▶ Switch the ignition off and switch it back on. Active Steering Assist is available once more.
Active Lane Keeping Assist currently unavailable See Owner's Manual	* Active Lane Keeping Assist is temporarily unavailable. The ambient conditions are outside the system limits (→ page 258). ▶ Drive on. As soon as the ambient conditions are within the system limits, the system will become available again.
Active Lane Keeping Assist inoperative	* Active Lane Keeping Assist is malfunctioning. ▶ Consult a qualified specialist workshop.

Display messages	Possible causes/consequences and ▶ Solutions
Blind Spot Assist currently unavailable See Owner's Manual	* Blind Spot Assist is temporarily unavailable. The system limits have been reached (→ page 255). ▶ Drive on. Once the cause of the problem is no longer present, the system will be available again. or ▶ If the display message does not disappear, stop the vehicle in accordance with the traffic conditions and restart the engine.
Blind Spot Assist inoperative	* Blind Spot Assist is malfunctioning. ▶ Consult a qualified specialist workshop.
Blind Spot Assist not available when towing a trailer See Owner's Manual	* When you establish the electrical connection to the trailer, Blind Spot Assist is unavailable. ▶ Press the left-hand Touch Control and acknowledge the display message.
Active Blind Spot Assist currently unavailable See Owner's Manual	* Active Blind Spot Assist is temporarily unavailable. The system limits have been reached (→ page 255). ▶ Drive on. Once the cause of the problem is no longer present, the system will be available again. or ▶ If the display message does not disappear, stop the vehicle in accordance with the traffic conditions and restart the engine.

Display messages	Possible causes/consequences and ▶ Solutions
Active Blind Spot Assist inoperative	* Active Blind Spot Assist is malfunctioning. ▶ Consult a qualified specialist workshop.
Active Blind Spot Assist not available when towing a trailer See Owner's Manual	* When you establish the electrical connection to the trailer, Active Blind Spot Assist is unavailable. ▶ Press the left-hand Touch Control and acknowledge the display message.
Active Parking Assist and PARKTRONIC inoperative See Owner's Manual	* Active Parking Assist and Parking Assist PARKTRONIC are malfunctioning. ▶ Stop the vehicle in accordance with the traffic conditions and restart the engine. ▶ If the display message continues to be displayed, consult a qualified specialist workshop.
Traffic Sign Assist currently unavailable See Owner's Manual	* Traffic Sign Assist is temporarily unavailable. ▶ Drive on. Once the cause of the problem is no longer present, the system will be available again.
Traffic Sign Assist inoperative	* Traffic Sign Assist is malfunctioning. ▶ Stop the vehicle in accordance with the traffic conditions and restart the engine. ▶ If the display message continues to be displayed, consult a qualified specialist workshop.
Speed Limit Assist currently unavailable See Owner's Manual	* Speed Limit Assist is temporarily unavailable. ▶ Drive on. Once the cause of the problem is no longer present, the system will be available again.

Display messages	Possible causes/consequences and ▶ Solutions
Speed Limit Assist inoperative	* Speed Limit Assist is malfunctioning. ▶ Consult a qualified specialist workshop.
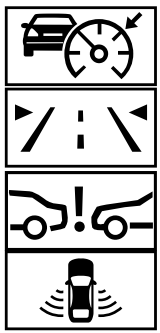 Currently unavailable Radar sensors dirty	* The radar sensor system is malfunctioning. Possible causes: • dirt on the sensors • heavy rain or snow • extended country driving without other traffic, e.g. in the desert Driving systems and driving safety systems may be malfunctioning or temporarily unavailable. Once the cause of the problem is no longer present, the driving systems and driving safety systems will be available again. If the display message does not disappear: ▶ Stop the vehicle in accordance with the traffic conditions. ▶ Clean all sensors (→ page 467). ▶ Restart the engine.

Display messages	Possible causes/consequences and ▶ Solutions
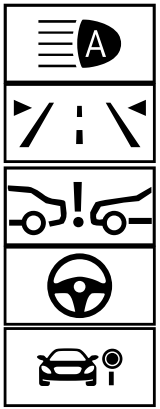 Currently unavailable Camera view restricted	* The camera view is restricted. Possible causes: • dirt on the windscreen in the camera's field of vision • heavy rain, snow or fog • mist on the windscreen in front of the camera ⓘ Mist detected on the windscreen will be automatically removed with the aid of a built-in heater within approximately 12 minutes. Driving systems and driving safety systems may be malfunctioning or temporarily unavailable. Once the cause of the problem is no longer present, the driving systems and driving safety systems will be available again. If the display message does not disappear: ▶ Stop the vehicle in accordance with the traffic conditions. ▶ Clean the windscreen if necessary.
 Off	* The HOLD function is deactivated because the vehicle is slipping or a condition for activation is not fulfilled. ▶ Reactivate the HOLD function later or check the activation conditions for the HOLD function (→ page 229).

Display messages	Possible causes/consequences and ▶ Solutions
 --- km/h	* Active Distance Assist DISTRONIC cannot be activated as not all activation conditions are fulfilled. ▶ Comply with the activation conditions of Active Distance Assist DISTRONIC (→ page 218).
 suspended	* If you depress the accelerator pedal beyond the Active Distance Assist DISTRONIC setting, the system will be put into passive mode (→ page 227).
 Off	* Active Distance Assist DISTRONIC was deactivated. If a warning tone also sounds, Active Distance Assist DISTRONIC has deactivated automatically (→ page 218).
Active Distance Assist currently unavailable See Owner's Manual	* Active Distance Assist DISTRONIC is temporarily unavailable. The ambient conditions are outside the system limits (→ page 216). ▶ Drive on. As soon as the ambient conditions are within the system limits, the system will become available again.
Active Distance Assist inoperative	* Active Distance Assist DISTRONIC is malfunctioning. Other driving systems and driving safety systems may also be malfunctioning.

Display messages	Possible causes/consequences and ▶ Solutions
	▶ Consult a qualified specialist workshop.
Active Distance Assist available again	* Active Distance Assist DISTRONIC is operational again and can be activated (→ page 218).
 --- km/h	* Cruise control cannot be activated as not all activation conditions are fulfilled. ▶ Observe the activation conditions for cruise control (→ page 214).
Cruise control inoperative	* Cruise control is malfunctioning. ▶ Consult a qualified specialist workshop.
Cruise control and Limiter inoperative	* Cruise control and the limiter are malfunctioning. ▶ Consult a qualified specialist workshop.
Cruise control off	* Cruise control has been deactivated. If there is an additional warning tone, cruise control has been deactivated automatically (→ page 212).
Limiter passive	* If you depress the accelerator pedal beyond the pressure point (kickdown), the limiter is switched to passive mode (→ page 214).

Display messages	Possible causes/consequences and ▶ Solutions
LIM - - - km/h	* The limiter cannot be activated as not all activation conditions have been fulfilled. ▶ Observe the activation conditions of the limiter (→ page 214).
Limiter inoperative	* The limiter is malfunctioning. ▶ Consult a qualified specialist workshop.
Speed limit (winter tyres) XXX km/h	* You have reached the stored maximum permissible speed for winter tyres. It is not possible to exceed this speed.
120 km/h! Maximum speed exceeded	* You have exceeded the maximum permissible speed (for certain countries only). ▶ Drive more slowly.

Driving safety systems

Display messages	Possible causes/consequences and ▶ Solutions
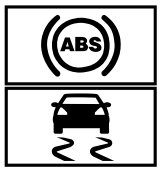 currently unavailable See Owner's Manual	* ABS and ESP® are temporarily unavailable. Other driving systems and driving safety systems may also be temporarily unavailable. The brake system will continue to operate normally. Braking distance may increase in an emergency braking situation. **⚠ WARNING** Risk of skidding if ABS and ESP® are malfunctioning If ABS and ESP® are malfunctioning, the wheels could lock when braking and ESP® cannot carry out vehicle stabilisation. The steering capability and braking characteristics are thus severely impaired. The braking distance may increase in an emergency braking situation. In addition, other driving safety systems are switched off. ▶ Drive on carefully. ▶ Have ABS and ESP® checked immediately at a qualified specialist workshop. ▶ Drive carefully on a suitable stretch of road, making slight steering movements at a speed above 30 km/h. ▶ If the display message does not disappear, consult a qualified specialist workshop immediately. Drive carefully.

Display messages	Possible causes/consequences and ▶ Solutions
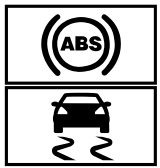 inoperative See Owner's Manual	* ABS and ESP® are malfunctioning. Other driving systems and driving safety systems may also be malfunctioning. The brake system will continue to operate normally. Braking distance may increase in an emergency braking situation. ⚠ **WARNING** Risk of skidding if ABS and ESP® are malfunctioning If ABS and ESP® are malfunctioning, the wheels could lock when braking and ESP® cannot carry out vehicle stabilisation. The steering capability and braking characteristics are thus severely impaired. The braking distance may increase in an emergency braking situation. In addition, other driving safety systems are switched off. ▶ Drive on carefully. ▶ Have ABS and ESP® checked immediately at a qualified specialist workshop. ▶ Drive on carefully. ▶ Consult a qualified specialist workshop immediately.
 currently unavailable See Owner's Manual	* ESP® is temporarily unavailable. Other driving systems and driving safety systems may also be malfunctioning.

Display messages	Possible causes/consequences and ▶ Solutions
	⚠ WARNING Risk of skidding if ESP® is malfunctioning If ESP® is malfunctioning, ESP® cannot carry out vehicle stabilisation. In addition, other driving safety systems are switched off. ▶ Drive on carefully. ▶ Have ESP® checked at a qualified specialist workshop. ▶ Drive carefully on a suitable stretch of road, making slight steering movements at a speed above 30 km/h. ▶ If the display message does not disappear, consult a qualified specialist workshop immediately. Drive carefully.
 inoperative See Owner's Manual	* ESP® is malfunctioning. Other driving systems and driving safety systems may also be malfunctioning. The brake system will continue to operate normally. Braking distance may increase in an emergency braking situation. **⚠ WARNING** Risk of skidding if ESP® is malfunctioning If ESP® is malfunctioning, ESP® cannot carry out vehicle stabilisation. In addition, other driving safety systems are switched off. ▶ Drive on carefully. ▶ Have ESP® checked at a qualified specialist workshop.

Display messages	Possible causes/consequences and ▶ Solutions
	▶ Drive on carefully. ▶ Consult a qualified specialist workshop immediately.
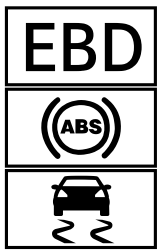 inoperative See Owner's Manual	* EBD, ABS and ESP® are malfunctioning. Other driving systems and driving safety systems may also be malfunctioning. **⚠ WARNING** Risk of skidding if EBD, ABS and ESP® are malfunctioning If EBD, ABS and ESP® are malfunctioning, the wheels can lock when braking and ESP® cannot carry out vehicle stabilisation. The steering capability and braking characteristics are thus severely impaired. The braking distance may increase in an emergency braking situation. In addition, other driving safety systems are switched off. ▶ Drive on carefully. ▶ Have the brake system checked immediately at a qualified specialist workshop. ▶ Drive on carefully. ▶ Consult a qualified specialist workshop immediately.
Active Brake Assist Functions currently limited See Owner's Manual	* **Vehicles with the Driving Assistance Package:** Active Brake Assist with cross-traffic function, Evasive Steering Assist or PRE-SAFE® PLUS are temporarily unavailable or only partially available. **Vehicles without the Driving Assistance Package:** Active Brake Assist is temporarily unavailable or only partially available.

Display messages	Possible causes/consequences and ▶ Solutions
	The ambient conditions are outside the system limits (→ page 206). ▶ Drive on. As soon as the ambient conditions are within the system limits, the system will become available again. ▶ If the display message does not disappear, stop the vehicle in accordance with the traffic conditions and restart the engine.
Active Brake Assist Functions limited See Owner's Manual	* **Vehicles with Driving Assistance Package:** Active Brake Assist with cross-traffic function, Evasive Steering Assist or PRE-SAFE® PLUS is malfunctioning. **Vehicles without Driving Assistance Package:** Active Brake Assist is malfunctioning. ▶ Consult a qualified specialist workshop.

Mercedes me connect

Display messages	Possible causes/consequences and ▶ Solutions
Mercedes me connect Services limited See Owner's Manual	* Service limited. At least one of the main functions of the Mercedes me connect system is malfunctioning. ▶ Observe the notes on the diagnostics connection (→ page 30). ▶ Consult a qualified specialist workshop.

Display messages	Possible causes/consequences and ▶ Solutions
 Inoperative	* At least one of the main functions of the Mercedes me connect system or of the SOS emergency call system is malfunctioning. ▶ Consult a qualified specialist workshop.

Battery

Display messages	Possible causes/consequences and ▶ Solutions
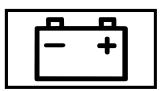 12 V battery See Owner's Manual	* The engine is off and the charge level is too low. ▶ Switch off electrical consumers that are not required. To charge the battery: ▶ Leave the engine running for a few minutes, or drive an extended distance. * If the message appears while the engine is running, this indicates an on-board electrical system malfunction. ▶ Consult a qualified specialist workshop.
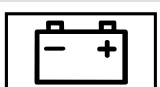 See Owner's Manual	* The battery is not being charged. **NOTE** Possible engine damage if you continue driving ▶ Do not continue driving under any circumstances.

Display messages	Possible causes/consequences and ▶ Solutions
	▶ Consult a qualified specialist workshop. ▶ Stop the vehicle immediately, paying attention to road and traffic conditions, and switch off the engine. ▶ Consult a qualified specialist workshop.
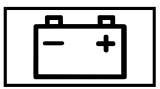 Stop vehicle See Owner's Manual	* The battery is no longer being charged and the charge level is too low. **! NOTE** Possible engine damage if you continue driving ▶ Do not continue driving under any circumstances. ▶ Consult a qualified specialist workshop. ▶ Stop the vehicle immediately in accordance with the traffic conditions. Do not continue driving. ▶ Switch off the engine. ▶ Consult a qualified specialist workshop.
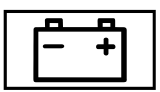 Stop vehicle Leave engine running	* The battery charge level is too low. ▶ Stop the vehicle immediately in accordance with the traffic conditions. Do not continue driving. ▶ Leave the engine running. ▶ Wait until the display message disappears before pulling away. ▶ **If the display message does not disappear:** consult a qualified specialist workshop.

Tyre pressure monitor

Display messages	Possible causes/consequences and ▶ Solutions
Tyre press. monitor currently unavailable	* There is interference from a powerful radio signal source. As a result, no signals from the tyre pressure sensors are being received. The tyre pressure monitor is temporarily unavailable. ▶ Drive on. The tyre pressure monitor will restart automatically as soon as the cause has been rectified.
Tyre press. monitor inoperative	* The tyre pressure monitor is malfunctioning. ⚠ **WARNING** There is a risk of an accident if the tyre pressure monitoring system is malfunctioning If the tyre pressure monitoring system is malfunctioning, it is not able to issue a warning if there is pressure loss in one or more of the tyres. Tyres with insufficient tyre pressure may, for example, affect the vehicle's handling characteristics, steering and braking. - ▶ Have the tyre pressure monitoring system checked at a qualified specialist workshop. ▶ Consult a qualified specialist workshop.
Tyre press. monitor inoperative No wheel sensors	* The wheels fitted do not have suitable tyre pressure sensors. The tyre pressure monitor is deactivated. ▶ Fit wheels with suitable tyre pressure sensors.

Display messages	Possible causes/consequences and ▶ Solutions
 Wheel sensor(s) missing	* There is no signal from the tyre pressure sensor of one or more wheels. No pressure value is displayed for the affected tyre. ▶ Have the faulty tyre pressure sensor replaced at a qualified specialist workshop.
 Check tyre(s)	* The tyre pressure in one or more tyres has dropped significantly. The wheel position is displayed. ⚠ **WARNING** Risk of an accident due to insufficient tyre pressure Tyres with insufficient tyre pressure pose the following risks: • The tyres may burst, especially as the load and vehicle speed increase. • The tyres may wear excessively and/or unevenly, which may greatly impair tyre traction. • - The driving characteristics, steering and braking may be greatly impaired. You could then lose control of the vehicle. ▶ Observe the recommended tyre pressures. ▶ Adjust the tyre pressure if necessary. ▶ Stop the vehicle in accordance with the traffic conditions. ▶ Check the tyre pressure (→ page 494) and the tyres.

Display messages	Possible causes/consequences and ▶ Solutions
 Rectify tyre pressure	* The tyre pressure is too low in at least one of the tyres, or the difference in tyre pressure between the individual wheels is too great. ▶ Check the tyre pressure and add air, if necessary. ▶ When the tyre pressure is correct, restart the tyre pressure monitor (→ page 497).
 Warning tyre defect	* The tyre pressure in one or more tyres has dropped suddenly. The wheel position is displayed. ⚠ **WARNING** Risk of an accident from driving with a flat tyre Flat tyres are dangerous in the following ways: • The tyres can overheat and cause a fire. • - The driving characteristics, steering and braking may be greatly impaired. You could then lose control of the vehicle. ▶ Do not drive with a flat tyre. ▶ Observe the notes on flat tyres. Notes on flat tyres (→ page 473). ▶ Stop the vehicle in accordance with the traffic conditions. ▶ Check the tyres.
Tyre(s) overheated	* At least one tyre is overheating. The affected tyres are displayed in red. At temperatures close to the limit value, the tyres are displayed in yellow.

Display messages	Possible causes/consequences and ▶ Solutions
	▶ Drive more slowly.
Reduce speed	* At least one tyre is overheating. The affected tyres are displayed in red. At temperatures close to the limit value, the tyres are displayed in yellow. **⚠ WARNING** Risk of an accident from driving with overheated tyres Overheated tyres may burst, particularly at high speeds. ▶ Reduce speed so that the tyres cool down. ▶ Reduce speed so that the tyres cool down.

Tyre pressure loss warning system

Display messages	Possible causes/consequences and ▶ Solutions
Tyre pressure Check tyres	* The tyre pressure loss warning system has detected a significant loss of pressure. **⚠ WARNING** Risk of an accident due to insufficient tyre pressure Tyres with insufficient tyre pressure pose the following risks: • The tyres may burst, especially as the load and vehicle speed increase. • The tyres may wear excessively and/or unevenly, which may greatly impair tyre traction.

Display messages	Possible causes/consequences and ▶ Solutions
	• - The driving characteristics, steering and braking may be greatly impaired. You could then lose control of the vehicle. ▶ Observe the recommended tyre pressures. ▶ Adjust the tyre pressure if necessary. ▶ Stop the vehicle in accordance with the traffic conditions. ▶ Check the tyre pressure (→ page 494) and the tyres. ▶ When the tyre pressure is correct, restart the tyre pressure loss warning system (→ page 502).
Check tyre pressures then restart Run Flat Indicator	* The tyre pressure loss warning system generated a display message and has not been restarted since. ▶ When the tyre pressure is correct, restart the tyre pressure loss warning system (→ page 502).
Run Flat Indicator inoperative	* The tyre pressure loss warning system is malfunctioning. ▶ Consult a qualified specialist workshop.

Exhaust gas aftertreatment

Display messages	Possible causes/consequences and ▶ Solutions
 Refill AdBlue See Owner's Manual	* The AdBlue® level has fallen below the reserve range. ▶ Add at least 5 l of AdBlue® (→ page 189).
 Top up AdBlue Emergency op. in XXX miles See Owner's Manual	* The low AdBlue® level will lead to limited performance after the remaining distance displayed has been driven. ▶ Add at least 5 l of AdBlue® (→ page 189).
 XX,X l Top up AdBlue Emer. op.: max. XXX km/h Start not poss. in XXX km	* The low AdBlue® level will lead to limited performance from the speed displayed. After the remaining distance displayed has been covered, it will no longer be possible to start the engine. ▶ Add at least the amount of AdBlue® displayed (→ page 189).

Display messages	Possible causes/consequences and ▶ Solutions
 XX,X l Top up AdBlue Switch on ignition, wait 60 sec. or eng. start not poss.	* The AdBlue® tank is empty. You can no longer start the engine. ▶ Add at least the amount of AdBlue® displayed (⟶ page 189). ▶ Switch on the ignition and wait for around 60 seconds. ▶ Start the engine.
 AdBlue system fault See Owner's Manual	* The AdBlue® system is malfunctioning. ▶ Consult a qualified specialist workshop immediately.
 AdBlue system fault Emergency op. in XXX miles See Owner's Manual	* The AdBlue® system is malfunctioning. Performance will be reduced once the remaining distance displayed has been covered. ▶ Consult a qualified specialist workshop immediately.

Display messages	Possible causes/consequences and ▶ Solutions
 AdBlue system fault Emer. op.: max. XXX km/h Start not poss. in XXX km	* Power restriction due to the AdBlue® system fault. After the distance displayed has been covered, it will no longer be possible to start the engine. ▶ Consult a qualified specialist workshop immediately.
 AdBlue system fault Engine start not possible	* The AdBlue® system is malfunctioning. You can no longer start the engine. ▶ Consult a qualified specialist workshop immediately.

Engine oil

Display messages	Possible causes/consequences and ▶ Solutions
 Add 1 litre engine oil when next refuelling	* Display message only for certain engines: The engine oil level has dropped to the minimum level. **! NOTE** Engine damage caused by driving with insufficient engine oil ▶ Avoid long journeys with insufficient engine oil. ▶ When next refuelling, add 1 litre of engine oil (→ page 459). Notes on engine oil (→ page 528).
 Engine oil level Reduce oil level	* Display message only for certain engines: The engine oil level is too high. **! NOTE** Engine damage caused by driving with excess engine oil ▶ Avoid long journeys with excess engine oil. ▶ Consult a qualified specialist workshop immediately and have the engine oil level reduced.

Display messages	Possible causes/consequences and ▶ Solutions
 Engine oil level Stop vehicle Switch engine off	* Display message only for certain engines: The engine oil level is too low. **! NOTE** Engine damage caused by driving with insufficient engine oil ▶ Avoid long journeys with insufficient engine oil. ▶ Stop the vehicle immediately in accordance with the traffic conditions. Do not continue driving. ▶ Switch off the engine. ▶ Add 1 l of engine oil (→ page 459). ▶ Check the engine oil level. Notes on engine oil (→ page 528).
 Engine oil pressure Stop Switch off engine	* Display message only for certain engines: The oil pressure is too low. **! NOTE** Engine damage caused by driving with insufficient oil pressure ▶ Avoid driving with insufficient oil pressure. ▶ Stop the vehicle immediately in accordance with the traffic conditions. Do not continue driving. ▶ Consult a qualified specialist workshop.

Display messages	Possible causes/consequences and ▶ Solutions
 Engine oil level cannot be measured	* The electrical connection to the oil level sensor has been interrupted or the oil level sensor is faulty. ▶ Consult a qualified specialist workshop.

Warning and indicator lamps

Overview of indicator and warning lamps

Some systems will perform a self-test when the ignition is switched on. Some indicator and warning lamps may briefly light up or flash. This behaviour is non-critical. These indicator and warning lamps indicate a malfunction only if they light up or flash after the engine has been started or during a journey.

Instrument display (standard)



Widescreen cockpit instrument display

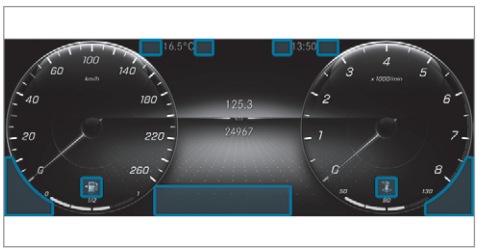

Depending on the display setting, the positions of the indicator lamps on the instrument display may differ from the example shown.

Indicator and warning lamps:

 Low beam (→ page 134)

 Standing lights (→ page 134)

 High beam (→ page 136)

 Turn signal light (→ page 136)

 Rear fog light (→ page 134)

 Restraint system (→ page 595)

 Seat belt not fastened (→ page 595)

 Brakes (yellow) (→ page 601)

 Brakes (red) (→ page 601)

 Electric parking brake (yellow) (→ page 601)

 Electric parking brake (red) (→ page 601)

 ABS malfunction (→ page 604)

 ESP® (→ page 604)

 ESP® OFF (→ page 604)

 Distance warning (→ page 603)

 Electric power steering malfunction (→ page 596)

 Engine diagnosis (→ page 598)

 Preglow

 Electrical fault (→ page 598)

 Fuel reserve with fuel filler cap location indicator (→ page 598)

 **Vehicles with a widescreen cockpit:** coolant too hot or cold (→ page 598)

 Tyre pressure monitor (→ page 607)

 Trailer hitch not operational (→ page 596)

Occupant safety

Warning/indicator lamp	Possible causes/consequences and ▶ Solutions
 Restraint system warning lamp	The red restraint system warning lamp is lit while the engine is running. *The restraint system is malfunctioning (→ page 37). ⚠ **WARNING** Risk of injury due to malfunctions in the restraint system If the restraint system is malfunctioning, restraint system components may be triggered unintentionally or may not deploy as intended during an accident. This may affect the seat belt tensioner or airbag, for example. ▶ Have the restraint system checked and repaired immediately at a qualified specialist workshop. ▶ Drive on carefully. ▶ Note the messages on the multifunction display. ▶ Consult a qualified specialist workshop immediately.
 Seat belt warning lamp flashes	The red seat belt warning lamp flashes and an intermittent warning tone sounds. * The driver or front passenger has not fastened their seat belt while the vehicle is in motion. ▶ Fasten your seat belt(→ page 41). * There are objects on the front passenger seat. ▶ Remove the objects from the front passenger seat.

Warning/indicator lamp	Possible causes/consequences and ▶ Solutions
 Seat belt warning lamp lights up	The red seat belt warning lamp will light up once the engine has started. In addition, a warning tone may sound. *The seat belt warning lamp reminds the driver and front passenger to fasten their seat belts. ▶ Fasten your seat belt (→ page 41). If you have placed objects on the front passenger seat, the seat belt warning lamp may remain lit.

Vehicle

Warning/indicator lamp	Possible causes/consequences and ▶ Solutions
 Trailer tow hitch warning lamp	The red trailer tow hitch warning lamp is on. *The trailer tow hitch is not operational or is swivelling. ⚠ **WARNING** Risk of an accident if the ball neck is not locked If the ball neck is not in the locked position, the trailer may come loose. ▶ Pull over and stop the vehicle safely as soon as possible, paying attention to road and traffic conditions. Do not continue driving under any circumstances. ▶ Uncouple the trailer and secure it against rolling away. ▶ Initiate a new swivelling procedure and do not re-couple the trailer until the display message disappears.

Warning/indicator lamp	Possible causes/consequences and ▶ Solutions
	▶ Note the messages on the multifunction display. If the trailer hitch is swivelling: ▶ Wait until the ball coupling has reached the operational position.
 Warning lamp for electric power steering	The red electric power steering warning lamp is lit while the engine is running. *The power assistance or the steering itself is malfunctioning. ⚠ **WARNING** Risk of accident if steering capability is impaired If the steering does not function as intended, the vehicle's operating safety is jeopardised. ▶ Pull over and stop the vehicle safely as soon as possible, paying attention to road and traffic conditions. Do not continue driving under any circumstances. ▶ Consult a qualified specialist workshop. ▶ Note the messages on the multifunction display.

Engine

Warning/indicator lamp	Possible causes/consequences and ▶ Solutions
 Coolant warning lamp	The red coolant warning lamp is lit while the engine is running. *Possible causes: • The temperature sensor is malfunctioning • Coolant level too low • The air supply to the radiator is obstructed • The radiator fan is faulty If there is an additional warning tone, the coolant temperature has exceeded 120 °C. **⚠ WARNING** Danger of burns when opening the bonnet If you open the engine bonnet when the engine has overheated or during a fire in the engine compartment, you could come into contact with hot gases or other escaping operating fluids. ▶ Before opening the bonnet, allow the engine to cool down. ▶ In the event of a fire in the engine compartment, keep the engine bonnet closed and call the fire service. ▶ Stop the vehicle immediately in accordance with the traffic conditions and switch off the engine. Do not continue driving. ▶ Note the messages on the multifunction display. If the coolant temperature display is at the lower end of the temperature scale:

Warning/indicator lamp	Possible causes/consequences and ▶ Solutions
	▶ Consult a qualified specialist workshop. or ▶ Exit the vehicle and keep a safe distance from it until the engine has cooled down. ▶ Check the coolant level (→ page 460). ▶ Make sure that the air supply to the radiator is not impaired. ▶ Avoiding high loads on the engine, drive to the nearest qualified specialist workshop. In doing so, ensure that the coolant temperature display remains below 120 °C.
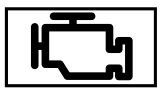 Engine diagnosis warning lamp	The yellow engine diagnostics warning lamp is lit while the engine is running. *A malfunction has occurred in the engine, the exhaust system or the fuel system. The emissions limit value may have been exceeded and the engine may be running in emergency operation mode. ▶ Have the vehicle checked as soon as possible at a qualified specialist workshop. ***Vehicles with a diesel engine:** the fuel tank may have been run dry. ▶ Start the engine three to four times after refuelling. If the yellow engine diagnosis warning lamp goes out, emergency operation mode is cancelled. The vehicle need not be checked.

Warning/indicator lamp	Possible causes/consequences and ▶ Solutions
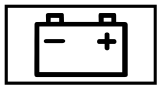 Electrical fault warning lamp	The red electrical fault warning lamp is lit. * There is a fault in the electrics. ▶ Observe the messages on the multifunction display.
 Fuel reserve warning lamp	The yellow fuel reserve warning lamp lights up while the engine is running. * The fuel supply has dropped into the reserve range. ▶ Refuel.

Brakes

Warning/indicator lamp	Possible causes/consequences and ▶ Solutions
 Red indicator lamp, electric parking brake applied  Yellow electric parking brake indicator lamp is malfunctioning	The red electric parking brake indicator lamp flashes or is lit. The yellow indicator lamp is also lit if the electric parking brake malfunctions. * ▶ Observe the messages on the multifunction display.
 Brake system warning lamp (yellow)	The yellow brake system warning lamp is lit while the engine is running. * ⚠ **WARNING** Risk of an accident due to a brake system malfunction If the brake system is malfunctioning, braking characteristics may be impaired. ▶ Drive on carefully. ▶ Have the brake system checked immediately at a qualified specialist workshop. ▶ Adjust your speed and continue to drive carefully, leaving a suitable distance to the vehicle in front.

Warning/indicator lamp	Possible causes/consequences and ▶ Solutions
	▶ If the multifunction display shows a display message, please observe it. ▶ Consult a qualified specialist workshop.
 Brake system warning lamp (red)	The red brake system warning lamp is lit while the engine is running. *Possible causes: • The brake force boosting is malfunctioning and the braking characteristics may be affected. • There is insufficient brake fluid in the brake fluid reservoir. **⚠ WARNING** Risk of accident and injury if brake force boosting is malfunctioning If brake force boosting is malfunctioning, increased brake pedal force may be necessary for braking. The braking characteristics may be impaired. The braking distance can increase in emergency braking situations. ▶ Stop in a safe location immediately. Do not continue driving! ▶ Consult a qualified specialist workshop. **⚠ WARNING** Risk of an accident due to low brake fluid level If the brake fluid level is too low, the braking effect and the braking characteristics may be impaired. ▶ Stop the vehicle as soon as possible, paying attention to road and traffic conditions. Do not continue driving. ▶ Consult a qualified specialist workshop. ▶ Do not top up the brake fluid.

Warning/indicator lamp	Possible causes/consequences and ▶ Solutions
	▶ Stop the vehicle immediately in accordance with the traffic conditions. Do not continue driving. ▶ Note the messages on the multifunction display. ▶ Consult a qualified specialist workshop.

Driving systems

Warning/indicator lamp	Possible causes/consequences and ▶ Solutions
 Warning lamp for distance warning function	The red distance warning lamp lights up while the vehicle is in motion. * The distance to the vehicle in front is too small for the speed selected. If there is an additional warning tone, you are approaching an obstacle at too high a speed. ▶ Be prepared to brake immediately. ▶ Increase the distance. Function of Active Brake Assist (→ page 206).

Driving safety systems

Warning/indicator lamp	Possible causes/consequences and ▶ Solutions
 ABS warning lamp	The yellow ABS warning lamp is lit while the engine is running. *ABS is malfunctioning. If there is an additional warning tone, EBD is malfunctioning. Other driving systems and driving safety systems may also be malfunctioning. **⚠ WARNING** There is a risk of skidding if EBD or ABS is malfunctioning If EBD or ABS is malfunctioning, the wheels may lock when braking. The steering capability and braking characteristics are thus severely impaired. Braking distance may increase in an emergency braking situation. In addition, other driving safety systems are switched off. ▶ Drive on carefully. ▶ Have the brake system checked immediately at a qualified specialist workshop. ▶ Drive on carefully. ▶ Note the messages on the multifunction display. ▶ Consult a qualified specialist workshop.

Warning/indicator lamp	Possible causes/consequences and ▶ Solutions
 ESP® warning lamp flashes	The yellow ESP® warning lamp flashes while the vehicle is in motion. * One or more wheels has reached its grip limit (→ page 202). ▶ Adapt your driving style to suit the road and weather conditions.
 ESP® warning lamp lights up	The yellow ESP® warning lamp is lit while the engine is running. *ESP® is malfunctioning. Other driving systems and driving safety systems may also be malfunctioning. ⚠ **WARNING** Risk of skidding if ESP® is malfunctioning If ESP® is malfunctioning, ESP® cannot carry out vehicle stabilisation. In addition, other driving safety systems are switched off. ▶ Drive on carefully. ▶ Have ESP® checked at a qualified specialist workshop. ▶ Drive on carefully. ▶ Note the messages on the multifunction display. ▶ Consult a qualified specialist workshop.

Warning/indicator lamp	Possible causes/consequences and ▶ Solutions
 ESP® OFF warning lamp	The yellow ESP® OFF warning lamp is lit while the engine is running. *ESP® is deactivated. **⚠ WARNING** Risk of skidding when driving with ESP® deactivated If ESP® is deactivated, ESP® cannot carry out vehicle stabilisation. The availability of further driving safety systems is also limited. ▶ Drive on carefully. ▶ Only deactivate ESP® for as long as the situation requires. If ESP® cannot be activated, ESP® is malfunctioning. ▶ Have ESP® checked immediately at a qualified specialist workshop. ▶ Observe the notes on deactivating ESP® (→ page 202).

Tyre pressure monitor

Warning/indicator lamp	Possible causes/consequences and ▶ Solutions
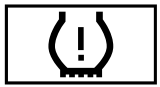 Tyre pressure monitoring system warning lamp flashes	The yellow tyre pressure monitoring system warning lamp (pressure loss/malfunction) flashes for approximately one minute and then remains lit. *The tyre pressure monitoring system is faulty. ⚠ **WARNING** There is a risk of an accident if the tyre pressure monitoring system is malfunctioning If the tyre pressure monitoring system is malfunctioning, it is not able to issue a warning if there is pressure loss in one or more of the tyres. Tyres with insufficient tyre pressure may, for example, affect the vehicle's handling characteristics, steering and braking. - ▶ Have the tyre pressure monitoring system checked at a qualified specialist workshop. ▶ Consult a qualified specialist workshop.
 Tyre pressure monitoring system warning lamp lights up	The yellow tyre pressure monitoring system warning lamp (pressure loss/malfunction) is lit. *The tyre pressure monitoring system has detected tyre pressure loss in at least one of the tyres. ⚠ **WARNING** Risk of an accident due to insufficient tyre pressure Tyres with insufficient tyre pressure pose the following risks: • The tyres may burst, especially as the load and vehicle speed increase.

Warning/indicator lamp	Possible causes/consequences and ▶ Solutions
	• The tyres may wear excessively and/or unevenly, which may greatly impair tyre traction. • - The driving characteristics, steering and braking may be greatly impaired. You could then lose control of the vehicle. ▶ Observe the recommended tyre pressures. ▶ Adjust the tyre pressure if necessary. ▶ Stop the vehicle, paying attention to road and traffic conditions. ▶ Check the tyre pressure and the tyres.

1, 2, 3 ...

4MATIC 184
Function 184
12 V battery
see Battery (vehicle)
12 V socket
see Socket (12 V)
115 V socket
see Socket (115 V)
230 V socket
see Socket (230 V)
360° Camera 240
Care 467
Function 240
Opening the camera cover (reversing camera) 243
Selecting a view 243
Switching automatic operation on/off (reversing camera) 243

A

A/C function
Activating/deactivating (multimedia system) 156
Switching on/off (control panel) 155
ABS (Anti-lock Braking System) 202
Acceleration
see Kickdown
Access data
Setting (Bluetooth®) 430
Accident and breakdown management
Mercedes me connect 424
Acoustic locking verification signal
Activating/deactivating 79
Activating/deactivating automatic volume adjustment
Burmester® surround sound system 451
Active Blind Spot Assist 255
Activating/deactivating 258
Brake application 257
Function 255
System limitations 255
Trailer operation 257
Active bonnet (pedestrian protection) .. 455
Operation 455
Resetting 455
Active Brake Assist
Function/notes 206
Setting 212
Active Distance Assist DISTRONIC 216
Active Emergency Stop Assist 226
Active Lane Change Assist 225
Calling up a speed 218
Displays in the instrument display 227
Function 216
Increasing/decreasing speed 218
Requirements: 218
Route-based speed adaptation 221
Selecting 218
Steering wheel buttons 218
Storing a speed 218
Switching off/deactivating 218
Switching on/activating 218
System limitations 216
Active Emergency Stop Assist 226
Active headlamps 137

Active Lane Change Assist 225
Activating/deactivating 226
Function 225
Active Lane Keeping Assist 258
Activating/deactivating 260
Activating/deactivating the warning 261
Function 258
Setting the sensitivity 261
System limits 258
Trailer operation 258
Active Parking Assist 243
Cross Traffic Alert 249
Drive Away Assist 248
Exiting a parking space 247
Function 243
Manoeuvring assistance 249
Parking 245
System limitations 243
Active Service System PLUS
see ASSYST PLUS
Active Speed Limit Assist 220
Display 220
Function 220
Active Steering Assist 223
Activating/deactivating 224
Active Emergency Stop Assist 226
Active Lane Change Assist 225
Displays in the instrument display 227
Function 223
System limitations 223
Adaptive brake lights 212
Adaptive cruise control
see Active Distance Assist DISTRONIC
Adaptive functions, MULTIBEAM LED
see Intelligent Light System
Adaptive Highbeam Assist
Function 139
Switching on/off 140
Adaptive Highbeam Assist Plus
Function 140
Switching on/off 141
AdBlue® 527
Additives 527
Capacity 528
Fill level 273
Notes 188
Purity 527
Range 273
Topping up 189
Additional door lock 82
Additives 528
AdBlue® 527
Engine oil 528
Fuel 525
Additives (AdBlue®)
see AdBlue®
Additives (engine oil)
see Additives
Additives (fuel)
see Fuel
Address book
see Contacts
Adjusting the balance/fader
Advanced sound system 453
Burmester® surround sound system 451
Adjusting the bass, mid-range and treble
Burmester® surround sound system 451
Adjusting the headlamp range 135

Adjusting the mid-range, treble and bass
Burmester® surround sound system 451
Adjusting the sound focus
Burmester® surround sound system ... 452
Adjusting treble, mid-range and bass settings
Advanced sound system 452
Burmester® surround sound system 451
Advanced sound system
Adjusting the balance/fader 453
Adjusting treble, mid-range and bass settings 452
Calling up the sound menu 452
Information 452
Switching volume adjustment on/off 452
After-sales service centre
see ASSYST PLUS
Air conditioning menu
Calling up 156
Air conditioning system
see Climate control
Air distribution
Setting 154
Setting (multimedia system) 156
Air inlet
see Air-water duct
Air pressure
see Tyre pressure
Air vents 162
Adjusting (front) 162
Adjusting (rear) 163
Air vents
see Air vents
Air-recirculation mode 157
Air-water duct 461
Keeping free 461
Airbag 43
Activation 37
Front airbag (driver, front passenger) 43
Installation locations 43
Knee airbag 43
Overview 43
PASSENGER AIR BAG indicator lamp 48
Protection 44
Reduced protection 45
Side impact airbag 43
Window airbag 43
Airflow
Setting 154
Alarm system
see ATA (anti-theft alarm system)
All-wheel drive
see 4MATIC
Alternative route
see Route
Ambient lighting
Setting (multimedia system) 142
Android Auto 418
Connecting a mobile phone 419
Control using the application buttons 420
Ending 420
Information 419
Overview 418
Sound settings 420
Transferred vehicle data 420

Animals
Pets in the vehicle 76
Anti-lock braking system
see ABS (Anti-lock Braking System)
Anti-skid chains
see Snow chains
Anti-theft alarm system
see ATA (anti-theft alarm system)
Anti-theft protection
Additional door lock 82
Immobiliser 99
Anti-theft protection
see ATA (anti-theft alarm system)
Anticipatory occupant protection
see PRE-SAFE® (anticipatory occupant protection)
see PRE-SAFE® PLUS (anticipatory occupant protection plus)
Apple CarPlay® 417
Connecting an iPhone® 417
Control using the application buttons .. 418
Ending 418
Notes 417
Overview 417
Sound settings 418
Transferred vehicle data 420
Ashtray
Using 127
Assistance
Menu (on-board computer) 274
Assistance systems
see Driving safety system
ASSYST PLUS 454
Battery disconnection periods 455
Displaying the service due date 454
Function/notes 454
Regular maintenance work 454
Special service requirements 454
ATA (anti-theft alarm system) 99
Deactivating the alarm 99
Function 99
Function of interior protection 100
Priming/deactivating interior protection 101
Priming/deactivating tow-away protection 100
Tow-away protection function 100
ATTENTION ASSIST 250, 251
Function 250
Setting 251
System limitations 250
Attention assistant
see ATTENTION ASSIST
Augmented reality
see Route guidance with augmented reality
Authorised workshop
see Qualified specialist workshop
Automatic distance control
see Active Distance Assist DISTRONIC
Automatic driving lights 135
Automatic engine start (ECO start/stop function) 172
Automatic engine stop (ECO start/stop function) 172
Automatic front passenger front airbag deactivation system
see Automatic front passenger front airbag shutoff

Automatic front passenger front airbag shutoff 46, 48
Function of the automatic front passenger front airbag deactivation system 46
PASSENGER AIR BAG indicator lamp 48
Automatic mirror folding function
Activating/deactivating 153
Automatic transmission
DIRECT SELECT lever 178
Drive program display 175
Drive programs 174
DYNAMIC SELECT switch 174
Engaging drive position 180
Engaging neutral 180
Engaging park position 180
Engaging reverse gear 180
Kickdown 182
Manual gear changing 181
Steering wheel gearshift paddles 181
Transmission position display 178
Transmission positions 178
Automatic transmission (problem)
see Transmission (problem)
Axle load
Permissible 521
Trailer operation 535

B

Bag hook 120
Ball neck
Folding out/in 261
BAS (Brake Assist System) 202
Battery
Charging (Remote Online) 168
Key 80
Remote control (stationary heater) 161
Battery
see Battery (vehicle)
Battery (vehicle) 484
Charging 483
Charging (Remote Online) 168
Notes 479
Notes (starting assistance and charging) 481
Replacing 484
Starting assistance 483
Belt
see Seat belt
Bicycle rack
Trailer operation 264
Blind Spot Assist 255
Activating/deactivating 258
Function 255
System limitations 255
Blower
see Climate control
BlueTEC
see AdBlue®
Bluetooth® 338
Information 338
Setting up an Internet connection 430
Switching on/off 338
Bonnet
Resetting (active bonnet) 455
Boot lid
see Tailgate
Brake Assist System
see BAS (Brake Assist System)

Brake fluid
Notes 530
Brake force distribution
EBD (Electronic Brake force Distribution) 206
Brakes
ABS (Anti-lock Braking System) 202
Active Brake Assist 206
Adaptive brake lights 212
BAS (Brake Assist System) 202
Driving tips 170
EBD (Electronic Brake force Distribution) 206
HOLD function 229
Limited braking effect (salt-treated roads) 170
New/replaced brakepads/brake discs 169
Running-in notes 169
Braking assistance
see BAS (Brake Assist System)
Breakdown
Overview of the help functions 18
Tow-starting 489
Towing away 485
Transporting the vehicle 487
Wheel change 508
Breakdown
see Flat tyre
Burmester® surround sound system 451
Adjusting the balance/fader 451
Adjusting the sound focus 452
Adjusting treble, mid-range and bass settings 451
Automatic volume adjustment 451
Calling up the sound menu 451
Information 451
Selecting the sound profile 452
Buttons
Steering wheel 268

C

Call list
Deleting 409
Making a call 409
Overview 408
Selecting options 409
Selecting options for suggestions 409
Calling up the sound menu
Advanced sound system 452
Burmester® surround sound system 451
Calls 404
Accepting 404
Activating functions during a call 404
Calls with several participants 404
Declining 404
Ending a call 404
Incoming call during an existing call 405
Making 404
Mercedes me 421
Camera
see 360° Camera
see Reversing camera
Car key
see Key
Car wash
see Care
Car wash (care) 461
Car-to-X-Communication
Displaying hazard warnings 381
Overview 380
Sending hazard warnings 381

Care 469
Air-water duct 461
Car wash 461
Carpet 469
Decorative foil 465
Display 469
Exterior lighting 467
High-pressure cleaner 462
Matt finish 464
Paintwork 464
Plastic trim 469
Real wood/trim elements 469
Reversing camera 467
Reversing camera/360° Camera 467
Roof lining 469
Seat belt 469
Seat cover 469
Sensors 467
Tailpipes 467
Trailer hitch 467
Washing by hand 463
Wheels/rims 467
Windows 467
Wiper blades 467
Carpet (Care) 469
Changing bulbs 143
Dipped beam 145
Fitting/removing cover (front wheel arch) 145
Main beam 145
Notes 143
Overview 144
Reversing lights 146
Turn signal lights (rear) 146
Changing gears 181
Manually 181
Changing hub caps 508
Changing the lights
Driving abroad (symmetrical low beam) 134
Charging
Battery (vehicle) 483
USB port 130
Child safety lock
Rear door 75
Rear side windows 76
Child seat
Approval categories 59
Attaching (notes) 58
Basic instructions 52
Front passenger seat (notes) 73
Front passenger seat (without automatic airbag shutoff) 72
ISOFIX/i-Size (fitting) 65
Notes on risks and dangers 53
Recommended child restraint systems 56
Seats suitable for belt-secured child restraint systems 69
Seats suitable for i-Size child restraint systems 64
Seats suitable for ISOFIX child restraint systems 61
Securing on the front passenger seat 74
Securing on the rear seat 71
Top Tether 67
Children
Avoiding dangers in the vehicle 53
Basic instructions 52
Chock 507
Storage location 507
Chock
see Chock

Cigarette lighter
Front centre console ... 127
City lighting ... 138
Cleaning
see Care
Climate control ... 154
Activating/deactivating the A/C function (control panel) ... 155
Activating/deactivating the A/C function (multimedia system) ... 156
Activating/deactivating the synchronisation function (control panel) ... 157
Activating/deactivating the synchronisation function (multimedia system) ... 157
Air distribution settings ... 156
Air-recirculation mode ... 157
Automatic control ... 156
Calling up the air conditioning menu ... 156
Defrosting the windscreen ... 154
Demisting windows ... 157
Front air vents ... 162
Note ... 154
Rear air vents ... 163
Residual heat ... 157
Sets the airflow ... 154
Setting (multimedia system) ... 156
Setting the air distribution ... 154
Setting the temperature ... 154
Stationary heater/ventilation ... 157
Switching on/off ... 155
Switching the rear window heater on/off ... 154
THERMATIC control panel ... 154
THERMOTRONIC control panel ... 154
Ventilating the vehicle (convenience opening) ... 91
Coat hook ... 120
Coat hook on the tailgate ... 120
Cockpit ... 6
Overview ... 6
Coffee cup symbol
see ATTENTION ASSIST
Collapsible spare wheel ... 516
Inflating ... 517
Notes ... 516
Removing ... 517
Combination switch ... 136
Compass ... 390
Computer
see On-board computer
Connection status
Displaying ... 432
Overview ... 432
Connectivity
Switching transmission of the vehicle position on/off ... 338
Contacts ... 405
Calling up ... 406
Deleting ... 407
Deleting favourites ... 408
Downloading (from mobile phone) ... 405
Importing ... 407
Importing (overview) ... 406
Information ... 405
Making a call ... 407
Name format ... 406
Options ... 407
Saving as a favourite ... 408
Selecting options for suggestions ... 407
Storing ... 407
Convenience closing ... 92

Convenience opening 91
Coolant (engine)
Check level 460
Notes 531
Cooling
see Climate control
Copyright 35
Cornering light 138
Cross Traffic Alert 249
Crosswind Assist
Function/notes 205
Cruise control 212
Activating 214
Buttons 214
Calling up a speed 214
Deactivating 214
Function 212
Requirements 214
Selecting 214
Setting a speed 214
Storing a speed 214
System limitations 212
Cup holder 123, 125
Fitting/removing (centre console) 123, 125
Rear 126

D

Damage detection (parked vehicle) 199
Damping adjustment 231
Dash cam
Starting/ending a video recording 395
Dashboard
see Cockpit
Dashboard lighting
see Instrument lighting
Dashcam
Configuring the settings 396
Deleting a video recording 396
Notes 394
Selecting a USB device 394
Data acquisition
Vehicle 32
Data import/export 342
Function/notes 342
Importing/exporting 342
Data storage
Electronic control units 32
Online services 34
Vehicle 32
Date
Setting the time and date automatically 337
Deactivating the alarm (ATA) 99
Dealership
see Qualified specialist workshop
Declaration of conformity
Electromagnetic compatibility 25
Jack 29
TIREFIT kit 30
Wireless vehicle components 25, 29
Decorative foil (cleaning instructions) 465
DeNOx agent
see AdBlue®
Designs
Menu (on-board computer) 270

Destination 375
Editing intermediate destinations 365
Editing the previous destinations 376
External 376
Quick-access to destination information 373
Saving (current vehicle position) 375
Saving as global favourite 376
Destination entry 353
Entering 3 word addresses 358
Entering a POI or address 353
Entering an intermediate destination .. 365
Entering geo-coordinates 358
Notes 353
Selecting a contact 358
Selecting a POI 356
Selecting a received destination 360
Selecting from favourites 360
Selecting from the map 359
Selecting previous destinations 356
Detecting inattentiveness
see ATTENTION ASSIST
Diagnostics connection 30
Diesel
Low outside temperatures 526
Notes 526
Digital Owner's Manual 20
Digital speedometer 274
Digital Vehicle Key sticker
Locking the vehicle 84
Starting the vehicle 166
Unlocking the vehicle 84
Dinghy towing
see Tow-bar system
Dipped beam
Changing bulbs 145
DIRECT SELECT lever 178
Engaging drive position 180
Engaging neutral 180
Engaging park position 180
Engaging park position automatically .. 180
Engaging reverse gear 180
Function 178
Display (Care) 469
Display (multimedia system) 306
Home screen 304
Operating 306
Setting acoustic operating feedback ... 307
Settings 336
Display (on-board computer)
Displays on the multifunction display .. 272
Display content
Displaying 271
Display message 537
Calling up (on-board computer) 537
Notes 537
Display messages
--- km/h 574
--- km/h 573
LIM --- km/h 575
12 V battery See Owner's Manual 581
Active Light System inoperative 545
AdBlue system fault Emer. op.: max. XXX km/h Start not poss. in XXX km 590

AdBlue system fault Emergency op. in XXX miles See Owner's Manual 589
AdBlue system fault Engine start not possible 590
AdBlue system fault See Owner's Manual 589
Add 1 litre engine oil when next refuelling 591
ATTENTION ASSIST inoperative 566
ATTENTION ASSIST: Take a break! 566
Automatic driving lights inoperative 544
Before starting the engine, turn the steering wheel. 552
Brake immediately 564
Change key batteries 542
Check brake fluid level 565
Check brake pads See Owner's Manual 565
Check trailer hitch lock (white display message) 548
Check tyre(s) 584
Clean the fuel filter 555
Coolant Stop vehicle Switch engine off 554
Currently unavailable Camera view restricted 572
Currently unavailable Radar sensors dirty 571
currently unavailable See Owner's Manual 576
currently unavailable See Owner's Manual 577
Engine oil level cannot be measured 593
Engine oil level Reduce oil level .. 591
Engine oil level Stop vehicle Switch engine off 592
Engine oil pressure Stop Switch off engine 592
Fault Drive at max. 80 km/h 567
Front left malfunction Consult workshop (example) 538
inoperative Battery low 547
inoperative Refuel vehicle 547
inoperative See Owner's Man. 547
inoperative See Owner's Manual 577
inoperative See Owner's Manual 578
EBD inoperative See Owner's Manual 579
SOS Inoperative 581
Intelligent Light System inoperative 545

 Key not detected (red display message) 543
 Key not detected (white display message) 542
 Left dipped beam (example) 544
 Left windowbag malfunction Consult workshop (example) 539
 Malfunction See Owner's Manual 544
 Maximum speed exceeded 575
 Off 573
 Off 572
 Operation only possible in transmission position N 550
 Parking brake See Owner's Manual 561
 Rectify tyre pressure 585
 Refill AdBlue See Owner's Manual 588
 Release parking brake 564
 Replace air cleaner 556
 Replace key See Owner's Manual 541
 Replace key 542
 Reserve fuel level 555
 Restraint sys. malfunction Consult workshop 538
 See Owner's Manual 581
 Steering malfunction Increased physical effort See Owner's Manual 550
 Steering malfunction See Owner's Manual 551
 Steering malfunction Stop immediately See Owner's Manual 550
 Stop vehicle Leave engine running 582
 Stop vehicle See Owner's Manual 582
 suspended 573
 Switch off lights 545
 Switch on headlamps 545
 Top up AdBlue Emergency op. in XXX miles See Owner's Manual 588
 Top up coolant See Owner's Manual 554
 Top up washer fluid 553
 Trans. oil overheated Drive on with care 559
 Turn on the ignition to release the parking brake 564
 588
 Vehicle is operational Switch off ignition before exiting 548
 Warning tyre defect 585
 Wheel sensor(s) missing 584
 XX,X l Top up AdBlue Switch on ignition, wait 60 sec. or eng. start not poss. 589
Active Blind Spot Assist currently unavailable See Owner's Manual 569

Active Blind Spot Assist inoperative 570
Active Blind Spot Assist not available when towing a trailer See Owner's Manual 570
Active bonnet malfunction See Owner's Manual 552
Active Brake Assist Functions currently limited See Owner's Manual 579
Active Brake Assist Functions limited See Owner's Manual 580
Active Distance Assist available again 574
Active Distance Assist currently unavailable See Owner's Manual 573
Active Distance Assist inoperative 573
Active Lane Keeping Assist currently unavailable See Owner's Manual 568
Active Lane Keeping Assist inoperative 568
Active Parking Assist and PARKTRONIC inoperative See Owner's Manual 570
Active Steering Assist currently unavailable due to multiple emergency stops 568
Active Steering Assist currently unavailable See Owner's Manual 567
Active Steering Assist inoperative 567
Adaptive Highbeam Assist currently unavailable See Owner's Manual 546
Adaptive Highbeam Assist inoperative 546
Adaptive Highbeam Assist Plus currently unavailable See Owner's Manual 546
Adaptive Highbeam Assist Plus inoperative 546
Anti-theft alarm system Malfunction ... 553
Apply brake to deselect Park (P) position 556
Apply brake to select R 557
Auxiliary battery malfunction 558
Beginning emergency stop 567
Blind Spot Assist currently unavailable See Owner's Manual 569
Blind Spot Assist inoperative 569
Blind Spot Assist not available when towing a trailer See Owner's Manual ... 569
Check tyre pressures then restart Run Flat Indicator 587
Clutch overheated Avoid pulling away for XX:XX mins 560
Cruise control and Limiter inoperative 574
Cruise control inoperative 574
Cruise control off 574
Depress clutch fully to start engine 560

Drive system Malfunction Stop Switch engine off 556
Drive system Malfunction Visit workshop 556
Front-passenger airbag disabled See Owner's Manual 539
Front-passenger airbag enabled See Owner's Manual 540
Hazard warning lamps malfunctioning 546
Limiter inoperative 575
Limiter passive 574
Mercedes me connect Services limited See Owner's Manual 580
N permanently active Risk of vehicle rolling 557
Only select Park (P) when vehicle is stationary 557
Parking lock inoperative Apply the parking brake 559
Place the key in the marked space See Owner's Manual 543
PRE-SAFE inoperative See Owner's Manual 541
Reduce speed 586
Reversing not poss. Consult workshop 558
Risk of vehicle rolling away Apply parking brake See Owner's Manual 559
Risk of vehicle rolling away Parking brake not applied See Owner's Manual 564
Risk of vehicle rolling Driver door open and transmission not in P 557
Run Flat Indicator inoperative 587
Speed limit (winter tyres) XXX km/h ... 575
Speed Limit Assist currently unavailable See Owner's Manual 570
Speed Limit Assist inoperative 571
Teaching in transmission complete 560
Teaching in transmission Operate selector lever Brake for XX seconds Risk of vehicle rolling 559
To shift out of P or N, depress brake and start engine 557
To switch off the engine, press the Start/Stop button for at least 3 seconds or 3 times. 555
Traffic Sign Assist currently unavailable See Owner's Manual 570
Traffic Sign Assist inoperative 570
Transmission Malfunction 558
Transmission Malfunction Stop 558
Transmission Malfunction Visit workshop 560
Tyre press. monitor currently unavailable 583
Tyre press. monitor inoperative 583
Tyre press. monitor inoperative No wheel sensors 583

Tyre pressure Check tyres 586
Tyre(s) overheated 585
Without changing gear, consult workshop 558

Display on the windscreen
see Head-up display

Distance control
see Active Distance Assist DISTRONIC

Distance recorder
see Trip distance

DISTRONIC
see Active Distance Assist DISTRONIC

Door
Additional door lock 82
Child safety lock (rear door) 75
Locking (emergency key) 87
Opening (from the inside) 83
Unlocking (emergency key) 87
Unlocking (from the inside) 83

Door control panel 16

Drawbar
see Tow-bar system

Drinks holder
see Cup holder

Drive Away Assist 248

Drive position
Engaging 180

Drive program display 175

Drive programs
see DYNAMIC SELECT

Driver's seat
see Seat

Driving abroad
Symmetrical low beam 134

Driving lights
see Automatic driving lights

Driving safety system 201
ABS (Anti-lock Braking System) 202
Active Brake Assist 206
Adaptive brake lights 212
BAS (Brake Assist System) 202
EBD (Electronic Brake force Distribution) 206
ESP® Crosswind Assist 205
ESP® trailer stabilisation 205
Overview 201
Radar and ultrasonic sensors 201
Responsibility 201
STEER CONTROL 206

Driving system
Suspension with adaptive damping adjustment 231

Driving system
see 360° Camera
see Active Blind Spot Assist
see Active Distance Assist DISTRONIC
see Active Emergency Stop Assist
see Active Lane Change Assist
see Active Lane Keeping Assist
see Active Parking Assist
see Active Speed Limit Assist
see Active Steering Assist
see ATTENTION ASSIST
see Blind Spot Assist
see Cruise control
see Driving safety system
see HOLD function
see Limiter
see Parking Assist PARKTRONIC
see Reversing camera

see Speed Limit Assist
see Start-off assist
see Traffic Sign Assist

Driving tips
Driving abroad (symmetrical low beam) ... 134
General driving tips ... 170
Running-in notes ... 169

Drowsiness detection
see ATTENTION ASSIST

Dynamic handling control system
see ESP® (Electronic Stability Program)

DYNAMIC SELECT ... 174
Configuring drive program I ... 176
Displaying engine data ... 176
Displaying vehicle data ... 176
Drive program display ... 175
Drive programs ... 174
Function ... 174
Operating (DYNAMIC SELECT switch) ... 175
Selecting the drive program ... 175

DYNAMIC SELECT switch
Damping adjustment ... 231

E

E-mails
see In-Car Office

E10 ... 524

Easy entry feature
Function/notes ... 109
Setting ... 110

Easy exit feature
Function/notes ... 109
Setting ... 110

EBD (Electronic Brake force Distribution)
Function/notes ... 206

ECO display
Function ... 174
Resetting ... 275

ECO start/stop function ... 172
Automatic engine start ... 172
Automatic engine stop ... 172
Operation ... 172
Switching off/on ... 173

Electric parking brake ... 197
Applying automatically ... 197
Applying or releasing manually ... 199
Emergency braking ... 199
Releasing automatically ... 198

Electrical fuses
see Fuses

Electromagnetic compatibility
Declaration of conformity ... 25

Electronic Stability Program
see ESP® (Electronic Stability Program)

Emergency
Fire extinguisher ... 472
First-aid kit (soft sided) ... 472
Overview of the help functions ... 18
Removing the warning triangle ... 471
Safety vest ... 471
Setting up the warning triangle ... 472

Emergency braking ... 199

Emergency braking
see BAS (Brake Assist System)

Emergency call system
see Mercedes-Benz emergency call system

Emergency engine start ... 489

Emergency key
Inserting/removing ... 80
Locking a door ... 87
Unlocking a door ... 87
Unlocking the tailgate ... 89
Emergency operation mode
Starting the vehicle ... 167
Emergency spare wheel ... 513
Inflating ... 515
Notes ... 513
Removing ... 514
ENERGIZING Coach
Calling up ... 350
Function ... 349
ENERGIZING COMFORT ... 345
Overview of programmes ... 347
Starting the programme ... 348
ENERGIZING seat kinetics
Setting ... 345
ENERGIZING seat kinetics
see ENERGIZING COMFORT
Engine
ECO start/stop function ... 172
Engine number ... 521
Starting (Digital Vehicle Key sticker) ... 166
Starting (emergency operation mode) ... 167
Starting (mobile phone) ... 166
Starting (Remote Online) ... 168
Starting (start/stop button) ... 165
Starting assistance ... 483
Switching off (start/stop button) ... 191
Engine bonnet
Function (active bonnet) ... 455
Opening/closing ... 456
Engine data
Displaying ... 176
Engine electronics
Notes ... 519
Engine number ... 521
Engine oil ... 459
Additives ... 528
Capacity ... 529
Checking the oil level using the on-board computer ... 458
MB-Freigabe or MB-Approval ... 529
Quality ... 529
Topping up ... 459
Entering characters ... 329
Function/notes ... 329
On the touchpad ... 330
On the touchscreen (media display) ... 333
Setting the keyboard ... 336
ERA-GLONASS test mode
Starting/ending ... 428
ESC (Electronic Stability Control)
see ESP® (Electronic Stability Program)
ESP®
Crosswind Assist ... 205
Trailer stabilisation ... 205
ESP® (Electronic Stability Program) ... 202
Activating/deactivating ... 205
Function/notes ... 202
EU general operating permit number ... 521
Exterior lighting
Care ... 467
Exterior lighting
see Lights

F

Fatigue detection
see ATTENTION ASSIST

Fault message
see Display message

Favourites
Adding ... 323
Adding a destination ... 360
Calling up ... 323
Deleting ... 324
Home address ... 360
Moving ... 324
Overview ... 323
Renaming ... 324
Work address ... 360

Fill level
AdBlue® ... 273

Filling station search
Starting automatic search ... 367
Switching automatic search on/off ... 367

Fire extinguisher ... 472

First-aid kit (soft sided) ... 472

Flat towing
see Tow-bar system

Flat tyre ... 473
MOExtended tyres ... 473
Notes ... 473
TIREFIT kit ... 475
Wheel change ... 508

Floor mats ... 133

Foil covering
Radar and ultrasonic sensors ... 201

Free software ... 35

Frequencies
Mobile phone ... 520
Two-way radio ... 520

Frequency band
Dialling (on-board computer) ... 277

Front airbag (driver, front passenger) ... 43

Front passenger seat
see Load compartment
see Seat

Front wheel arch ... 145
Fitting/removing the cover ... 145

Front wheel arch cover
Fitting/removing ... 145

Fuel ... 525
Additives ... 525
Diesel ... 526
E10 ... 524
Fuel reserve ... 527
Low outside temperatures ... 526
Petrol ... 524
Quality (diesel) ... 526
Quality (petrol) ... 524
Refuelling ... 185
Sulphur content ... 524
Tank content ... 527

Fuel consumption
On-board computer ... 274

Fuel consumption indicator
Calling up ... 176

Function seat
see Door control panel

Fuses ... 490
Before replacing a fuse ... 490
Fuse assignment diagram ... 490
Fuse box in the engine compartment ... 490

Fuse box in the front passenger footwell ... 491
Fuse box in the load compartment ... 492
Notes ... 490

G

Garage door opener
Clearing the memory ... 195
Opening or closing the door ... 194
Programming buttons ... 192
Radio equipment approval numbers ... 195
Resolving problems ... 194
Synchronising the rolling code ... 193
Gearshift recommendation ... 178, 182
General operating permit number (EU) ... 521
Genuine parts ... 23
Glide mode ... 182
Global search
Function ... 327
Overview ... 327

H

Handbrake
see Electric parking brake
Handling characteristics (unusual) ... 493
Hazard warning lights ... 137
Head restraint
Front (adjusting mechanically) ... 104
Rear (adjusting) ... 105
Rear (fitting/removing) ... 105
Head-up display ... 279
Adjusting display elements (on-board computer) ... 279
Adjusting the brightness (on-board computer) ... 279
Function ... 280
Menu (on-board computer) ... 279
Operating the memory function ... 110
Setting the position (on-board computer) ... 279
Switching on/off ... 281
Headlamp flasher ... 136
Heating
see Climate control
High beam
Adaptive Highbeam Assist ... 139
Adaptive Highbeam Assist Plus ... 140
Switching on/off ... 136
High-pressure cleaner (care) ... 462
Hill Start Assist ... 228
HOLD function ... 229
Function/notes ... 229
Switching on/off ... 229
Home screen (media display)
Overview ... 304
Hotspot
Setting up (Wi-Fi) ... 340

I

i-Size child seat securing system
Fitting ... 65
Seats suitable for attaching ... 64
Identification plate
Engine ... 521
Vehicle ... 521
Ignition
Switching on (Start/Stop button) ... 164

Ignition key
see Key
Immobiliser ... 99
Implied warranty
Vehicle ... 32
In-Car Office ... 412, 413
Answering e-mail ... 414
Calling up ... 412
Features ... 412
Forwarding e-mail ... 414
Managing e-mails ... 413
Marking a task as completed ... 413
Noting an incoming call ... 413
Selecting functions (calendar entry) ... 412
Selecting functions (Tasks & Calls) ... 413
Writing e-mail ... 413
Increase in traffic information volume
Setting ... 450
Indicator lamps
see Warning/indicator lamps
Individual drive program
Configuring ... 176
Selecting ... 175
Inspection
see ASSYST PLUS
Instrument cluster
see Instrument display
Instrument display ... 267
Adjusting the lighting ... 273
Function/notes ... 267
Instrument cluster ... 10
Warning/indicator lamps ... 593
Instrument lighting ... 273
Intelligent Light System ... 137
Active headlamps ... 137
Adaptive Highbeam Assist ... 139
Adaptive Highbeam Assist Plus ... 140
City lighting ... 138
Cornering light ... 138
Motorway mode ... 138
Overview ... 137
Switching on/off ... 138
Interior lighting ... 142
Ambient lighting ... 142
Reading light ... 142
Setting ... 142
Switch-off delay time ... 143
Interior protection
Function ... 100
Priming/deactivating ... 101
Intermediate destination
Calculating a route with intermediate destinations ... 366
Entering ... 365
Modifying ... 365
Starting an automatic filling station search ... 367
Starting the automatic service station search ... 368
Internet
Calling up a web page ... 433
Closing the browser ... 435
Deleting a bookmark ... 435
Deleting history ... 435
Managing bookmarks ... 435
Internet connection
Cancelling permission (mobile phone) ... 431
Communication module function ... 429
Connection status ... 432
Displaying the connection status ... 432
Establishing ... 431

Establishing automatically 431
Information 429
Mobile phone details 431
Restrictions 429
Setting access data (Bluetooth®) 430
Setting automatic disconnection 432
Setting up (Bluetooth®) 430
Setting up (Wi-Fi) 430

iPhone®
see Apple CarPlay®
see Mercedes-Benz Link

ISOFIX child seat securing system
Fitting 65
Seats suitable for attaching 61

J

Jack
Declaration of conformity 29
Storage location 507

Jump-start connection 483
General notes 481

K

Key 78
Acoustic locking verification signal 79
Battery 80
Emergency key 80
Energy consumption 80
Features 78
Key ring attachment 80
Overview 78
Problem 82
Unlocking setting 79

Key functions
Deactivating 80

KEYLESS-GO
Locking the vehicle 85
Problem 86
Unlocking setting 79
Unlocking the vehicle 85

Kickdown 182
Using 182

Knee airbag 43

L

Lamp
see Interior lighting

Lamps (instrument display)
see Warning/indicator lamps

Lane detection (automatic)
see Active Lane Keeping Assist

Lane Keeping Assist
see Active Lane Keeping Assist

Language 341
Notes 341
Setting 341

LED light
see Intelligent Light System

Light switch
Overview 134

Lighting
see Interior lighting
see Lights

Lights 134
Active headlamps 137
Adaptive Highbeam Assist 139
Adaptive Highbeam Assist Plus 140

Adjusting the instrument lighting 273
Automatic driving lights 135
Changing bulbs 143
City lighting 138
Combination switch 136
Cornering light 138
Driving abroad (symmetrical low beam) 134
Hazard warning lights 137
Headlamp flasher 136
Headlamp range 135
High beam 136
Intelligent Light System 137
Light switch 134
Low beam 134
Motorway mode 138
Parking lights 134
Rear fog light 134
Responsibility for lighting systems 134
Setting the exterior lighting switch-off delay time 141
Standing lights 134
Switching the surround lighting on/off 142
Turn signal lights 136

Limiter 213
Activating 214
Buttons 214
Calling up a speed 214
Deactivating 214
Function 213
Passive mode 213
Permanent setting 216
Requirements 214
Selecting 214
Setting a speed 214
Storing a speed 214
System limitations 213

Limiting speed
see Limiter

LINGUATRONIC 283
Audible help functions 285
Improving speech quality 286
Language setting 284
Media player voice commands 295
Message voice commands 297
Multifunction steering wheel (operating) 283
Navigation voice commands 288
Notes on the voice commands 286
Online voice control 286
Operable functions 284
Operating safety 282
Radio voice commands 293
Setting (multimedia system) 285
Switch voice commands 287
Telephone voice controls 292
Text message voice commands 297
Vehicle voice commands 299
Voice prompting 283

Live Traffic Information
Displaying the traffic map 378
Displaying traffic incidents 379
Extending a subscription 378
Provider information 378
Registering on Mercedes me 378
Showing local area messages 380
Switching the traffic information display on 380

Load compartment 114
Expanding 114

Load compartment cover
Removing/fitting 117

Load compartment floor
Opening/closing ... 121
Loading ... 119
Bag hook ... 120
Coat hook ... 120
Notes ... 112
Roof rack ... 122
Stowage space underneath the load compartment floor ... 121
Tie-down eyes ... 119
Loading guidelines ... 112
Loads
Securing ... 112
Locking/unlocking
Activating/deactivating the automatic locking feature ... 86
Additional door lock ... 82
Digital Vehicle Key sticker ... 84
Emergency key ... 87
KEYLESS-GO ... 85
Mobile phone ... 84
Opening the tailgate ... 88
Smartphone ... 84
Unlocking/opening the doors from the inside ... 83
Low beam
Switching on/off ... 134
Symmetrical low beam ... 134
Lubricant additives
see Additives
Luggage
Securing ... 112
Lumbar support
see Lumbar support (4-way)
Lumbar support (4-way) ... 104

M

Main beam
Changing bulbs ... 145
Maintenance
see ASSYST PLUS
Malfunction
Parking Assist PARKTRONIC ... 233
Restraint system ... 37
Manual transmission
Operating the gearshift lever ... 177
Map ... 378, 384
Avoiding an area ... 387
Avoiding an area (overview) ... 387
Changing an area ... 388
Deleting an area ... 388
Displaying Qibla ... 390
Displaying the compass ... 390
Displaying the map version ... 387
Displaying the next intersecting street ... 387
Displaying the range ... 390
Displaying the satellite map ... 390
Displaying the traffic map ... 378
Displaying weather information ... 391
Map data ... 389
Moving ... 384
Selecting POI symbols ... 385
Selecting text information ... 386
Selecting the map orientation ... 385
Setting the map scale ... 384
Setting the map scale automatically ... 390
Showing in the multifunction display of the instrument cluster ... 391
Switching motorway information on/off ... 387
Updating ... 388

Massage programmes
Resetting the settings 106
Massage programs
Selecting the front seats 106
Massage settings
Resetting 106
Matt finish (cleaning instructions) 464
Maximum gross vehicle weight 521
Maximum speed
see Limiter
MBUX Interior Assistant (multimedia system) 310
Notes 309
Operating a function with the favourites pose 313
Operating functions through proximity of the hand 311
Overview 310
Selecting settings 315
Switching the reading light for the driver and front passenger on/off 314
Switching the search light for the driver on/off 314
Mecca 390
Media
Menu (on-board computer) 278
Media display
Notes 303
Media mode
Adding a favourite song 444
Connecting Bluetooth® audio equipment 442
Connecting USB devices 442
Controlling media playback 443
Copyright and trademarks 439
Making video settings 447
Notes about the search function in categories 445
Overview of the media menu 441
Playing back similar music tracks 444
Removing a favourite song 444
Searching for a music track according to mood 446
Starting a search in categories 446
Starting media playback 443
Supported format and data storage media 438
Surprise mix 444
Using the keyword search 446
Media playback
Operating (on-board computer) 278
Media source
Selecting (on-board computer) 278
Memory function
Head-up display – Calling up stored settings 110
Head-up display – Storing settings 110
Operating 110
Outside mirrors – Calling up stored settings 110
Outside mirrors – Storing settings 110
Seat – Calling up stored settings 110
Seat – Storing settings 110
Menu (on-board computer)
Assistance 274
Designs 270
Head-up display 279
Media 278
Navigation 276
Overview 269
Radio 277
Service 273

Telephone 278
Trip 274

Mercedes me app
Calling up services 425
Calling up your user account 425
Deleting the connection to the user account 425
Information 424

Mercedes me calls
Arranging a service appointment 422
Calling the Mercedes-Benz Customer Centre 422
Consenting to data transfer 422
Information 421
Making a call via the overhead control panel 421
Transferred data 423

Mercedes me connect
Accident and breakdown management 424
Information 423
Transferred data 424

Mercedes-AMG vehicles
Notes 164

Mercedes-Benz emergency call system 425
Automatic emergency call 426
Information 425
Information on data transfer 428
Manual emergency call 427
Overview 426
Self-diagnosis (Russia) 428
Starting/ending ERA-GLONASS test mode 428

Mercedes-Benz Link 415
Connecting 416
Ending 416
Note 416
Overview 415
Sound settings 416

Mercedes-Benz service centre
see Qualified specialist workshop

Message (multifunction display)
see Display message

Message memory 537

Messages 409
Calling a message sender 411
Composing 410
Configuring the displayed text messages 410
Deleting 412
Forwarding 411
Overview 409
Reading 410
Replying 410
Sending 410
Using a number/URL 411
Using templates 411
Voice commands (LINGUATRONIC) 297

Mirrors
see Outside mirrors

Mobile phone
Cancelling permission for Internet connection 431
Damage detection (parked vehicle) 199
Frequencies 520
Locking the vehicle 84
Starting the vehicle 166
Transmission output (maximum) 520
Unlocking the vehicle 84
Wireless charging 132
see Apple CarPlay®

Mobile phone
see Android Auto
see Mercedes-Benz Link
see Telephone
Mobile phone voice recognition
Starting 404
Stopping 404
Model series
see Vehicle identification plate
MOExtended tyres 473
Motorway mode 138
MULTIBEAM LED
see Intelligent Light System
Multifunction display
Overview of the displays 272
Multifunction steering wheel
Overview of buttons 268
Multifunction steering wheel
see Steering wheel
Multimedia system
Activating/deactivating standby mode 200
Adjusting the volume 329
Central control elements 305
Configuring display settings 336
Configuring drive program I 176
ENERGIZING COMFORT programme (overview) 347
ENERGIZING seat kinetics 345
Favourites 323
Main functions 315
MBUX Interior Assistant (notes) 309
Overview 302
Restoring the factory settings 345
Standby mode function 200
Starting the ENERGIZING COMFORT programme 348
Switching the sound on/off 328
Multimedia system
see Display (multimedia system)
see Entering characters
see MBUX Interior Assistant (multimedia system)
see Notifications Centre
see Profile
see Suggestions
see Themes
see Touch Control
see Touchpad
Music online
Calling up 444
Configuring options 445
Search function 444

N

Navigation
Menu (on-board computer) 276
Overview 352
Showing/hiding the menu 351
Switching on 351
Updating the map data 388
Voice commands (LINGUATRONIC) 288
Navigation
see Destination
see Destination entry
see Map
see Parking service
see Route
see Route guidance
see Traffic information
Navigation announcements
Activating/deactivating 373

Adjusting the volume 374
Repeating 374
Switching audio fadeout on/off 374
Navigation messages
On-board computer 276
Near Field Communication (NFC) 402
Connecting the mobile phone to the multimedia system 402
General information 402
Locking the vehicle (digital vehicle key sticker) 84
Locking the vehicle (mobile phone) 84
Starting the vehicle (Digital Vehicle Key sticker) 166
Starting the vehicle (mobile phone) 166
Switching mobile phones 402
Unlocking the vehicle (digital vehicle key sticker) 84
Unlocking the vehicle (mobile phone) 84
Using a mobile phone 402
Neutral
Engaging 180
NFC
see Near Field Communication (NFC)
Non-operational time
Activating/deactivating standby mode 200
Standby mode function 200
Notifications Centre 325
Calling up a notification 326
Editing a notification 326
Global search (overview) 327
Notification types 325
Overview 325
Selecting actions for a notification 326
Using the global search 327

O

Occupant safety
Pets in the vehicle 76
Occupant safety
see Airbag
see Automatic front passenger front airbag shutoff
see PRE-SAFE® (anticipatory occupant protection)
see PRE-SAFE® PLUS (anticipatory occupant protection plus)
see Restraint system
see Seat belt
Odometer
see Total distance
Oil
see Engine oil
On-board computer 269
Assistance menu 274
Displaying the service due date 454
Head-up display menu 279
Media menu 278
Menu designs 270
Menu overview 269
Multifunction display 272
Navigation menu 276
Operate 269
Radio menu 277
Service menu 273
Telephone menu 278
Trip menu 274
On-board diagnostics interface
see Diagnostics connection
On-board electronics
Engine electronics 519

Notes 519
Two-way radios 519

Online services
Data storage 34

Online services
see In-Car Office

Open-source software 35

Operating fluids
AdBlue® 527
Additives (fuel) 525
Brake fluid 530
Coolant (engine) 531
Engine oil 528
Fuel (diesel) 526
Fuel (petrol) 524
Notes 523
Windscreen washer fluid 531

Operating safety
Declaration of conformity (electromagnetic compatibility) 25
Declaration of conformity (jack) 29
Declaration of conformity (TIREFIT kit) .. 30
Declaration of conformity (wireless vehicle components) 25, 29
Information 24

Operating system
see On-board computer

Outside mirrors 150, 151
Anti-dazzle mode (automatic) 151
Automatic mirror folding function 153
Folding in/out 150
Operating the memory function 110
Parking position 152
Setting 150

Overhead control panel
Overview 14

Owner's Manual
Vehicle equipment 24

Owner's Manual (digital) 20

P

Paint code 521

Paintwork (cleaning instructions) 464

Panoramic sliding sunroof
see Sliding sunroof

Park position
Inserting 180
Selecting automatically 180

Parking
see Electric parking brake

Parking aid
see Parking Assist PARKTRONIC

Parking Assist PARKTRONIC 231
Activating 235
Adjusting warning tones 236
Deactivating 235
Function 231
Problems 233
Side impact protection 234
System limitations 231

Parking assistance systems
see Active Parking Assist

Parking brake
see Electric parking brake

Parking lights 134

Parking options
see Parking service

Parking position
Outside mirrors 152

Storing the position of the passenger outside mirror using reverse gear 152
Parking service 392
Notes 392
Paying parking charges 393
Selecting parking options 392
Showing a parking option on the map 393
Parking up 200
PARKTRONIC
Malfunction 233
Partitioning net
Attaching 118
PASSENGER AIR BAG status display
see Automatic front passenger front airbag shutoff
Pedestrian protection
see Active bonnet (pedestrian protection)
Permissible axle load 521
Permitted towing methods 484
Petrol 524
Pets in the vehicle 76
Phone book
see Contacts
PIN protection
Switching on/off 342
Plastic trim (Care) 469
POI
Quick access 373
Selecting 356
POI symbols
Selecting 385
Power supply
Switching on (Start/Stop button) 164
Power windows
see Side windows
PRE-SAFE® (anticipatory occupant protection) 50
Function 50
PRE-SAFE® Sound 50
Reversing measures 51
PRE-SAFE® PLUS (anticipatory occupant protection plus) 51
Function 51
Reversing measures 51
Preventative occupant protection system
see PRE-SAFE® (anticipatory occupant protection)
Previous destinations
Selecting 356
Profile 316
Creating a new profile 317
Maximum number of profiles 316
Notes 316
Overview 316
Selecting a profile 318
Selecting profile options 318
Showing the profile selection when entering 319
Synchronising 318
Programs
see DYNAMIC SELECT
Protection against collision
see Drive Away Assist
Protection of the environment
Notes 22
Take-back of end-of-life vehicles 22

Q

Qibla 390

QR code
Rescue card 32

Qualified specialist workshop 31

R

Radar and ultrasonic sensors
Damage 201

Radio
Activating 447
Activating/deactivating radio text 450
Activating/deactivating traffic announcements 450
Calling up a slide show 449
Calling up the station list 449
Deleting channels 449
Direct frequency entry 449
Displaying information 450
Displaying radio text 450
Editing station presets 449
Frequency fix 449
Menu (on-board computer) 277
Moving stations 449
Overview 448
Searching for stations 449
Setting a channel 448
Setting station tracking 449
Setting the frequency band 448
Setting the traffic information service volume increase 450
Storing radio stations 449
Voice commands (LINGUATRONIC) 293

Radio stations
Dialling (on-board computer) 277

Rain closing function
Sliding sunroof 96

Rain-closing feature
Side windows 91

Range
AdBlue® 273
Displaying 274

REACH regulation 32

Reading light
Switching on/off using poses 314

Reading light
see Interior lighting

Real wood (Care) 469

Rear door (child safety lock) 75

Rear fog light
Switching on/off 135

Rear seat
see Seat

Rear seat belt
Status display 42

Rear seat belt status display 42

Rear window
Changing the wiper blade 149

Rear window heater 154

Rear window wipers
Activating/deactivating 147

Rear-view mirror
see Outside mirrors

Recycling
see Take-back of end-of-life vehicles

Reducing agent
see AdBlue®

Refuelling
Refuelling the vehicle 185

Topping up AdBlue® ... 189
Registration
Vehicle ... 31
Remote control (stationary heater/ventilation)
Displays ... 160
Problems ... 162
Replacing the battery ... 161
Setting ... 159
Remote Online
Charging the battery ... 168
Cooling or heating the vehicle interior ... 168
Starting the vehicle ... 168
Replacing a bulb
see Changing bulbs
Rescue card ... 32
Reserve
Fuel ... 527
Reset function (multimedia system) ... 345
Residual heat ... 157
Restoring (factory settings)
see Reset function (multimedia system)
Restraint system ... 36
Basic instructions for children ... 52
Function in an accident ... 37
Functionality ... 37
Malfunction ... 37
Protection ... 36
Reduced protection ... 36
Self-test ... 37
Warning lamp ... 37
Reverse gear
Inserting ... 180
Reversing camera ... 236
Care ... 467
Function ... 236
Opening the camera cover (360° Camera) ... 243
Switching automatic operation on/off (360° Camera) ... 243
Reversing lights (changing bulbs) ... 146
Rims (Care) ... 467
Roll away protection
see HOLD function
Roof lining (care) ... 469
Roof load ... 533
Roof rack
Attaching ... 122
Loading ... 122
Route ... 361, 366
Accepting a detour recommendation after a prompt ... 363
Activating a commuter route ... 367
Alternative route (quick-access) ... 373
Calculating ... 361
Displaying destination information ... 365
Displaying the route list ... 366
Editing a stored route ... 369
External ... 376
Planning ... 365
Recording a route ... 368
Saving a recorded route ... 369
Selecting a type ... 362
Selecting an alternative route ... 366
Selecting notifications ... 364
Selecting options ... 363
Showing a stored route on the map ... 368
Starting a saved route ... 368
Starting the automatic service station search ... 368

Switching the automatic filling station search on/off ... 367
With intermediate destinations ... 366

Route guidance ... 369
Cancelling ... 374
Changing direction ... 370
Destination reached ... 373
From an off-road location ... 375
Lane recommendations ... 371
Motorway information ... 372
Notes ... 369
Off-road ... 375
To an off-road destination ... 375

Route guidance with augmented reality ... 382
Activating ... 383
Displaying street names and house numbers ... 383
Overview ... 382
Switching on display of traffic lights ... 383

Route-based speed adaptation
Displays in the instrument display ... 227
Function ... 221

Route-based speed adjustment
Setting ... 222

Run-flat characteristics
MOExtended tyres ... 473

Running-in notes ... 169

S

Safety systems
see Driving safety system

Safety vest ... 471

Satellite map ... 390

Search light
Switching on/off using poses ... 314

Seat ... 102, 114
4-way lumbar support ... 104
Adjusting (electrically) ... 103
Adjusting (Seat Comfort) ... 103
Adjusting the seat backrest angle (rear) ... 117
Backrest (rear) locking ... 116
Configuring the settings ... 106
Correct driver's seat position ... 102
ENERGIZING seat kinetics ... 345
Folding the backrest (front passenger seat) forwards ... 114
Folding the backrest (rear) back ... 116
Folding the backrest (rear) forwards ... 114
Operating the memory function ... 110
Resetting the settings ... 106
Setting options ... 16

Seat belt ... 38, 42
Activating/deactivating seat belt adjustment ... 42
Care ... 469
Fastening ... 41
Protection ... 38
Rear seat belt status display ... 42
Reduced protection ... 39
Releasing ... 42
Seat belt adjustment (function) ... 42
Warning lamp ... 42

Seat belt adjustment
Activating/deactivating ... 42
Function ... 42

Seat belt tensioners
Activation ... 37

Seat belt warning
see Seat belt
Seat cover (Care) 469
Seat heater
Activating/deactivating 106
Seat kinetics
Setting 345
Seat kinetics
see ENERGIZING COMFORT
Seat ventilation
Switching on/off 107
Second telephone
Connecting 401
Selecting a gear
see Changing gears
Selecting the sound profile
Burmester® surround sound system ... 452
Selector lever
see DIRECT SELECT lever
Self-test
Automatic front passenger front air-bag shutoff 48
Sensors (Care) 467
Service
Menu (on-board computer) 273
Service
see ASSYST PLUS
Service centre
see Qualified specialist workshop
Service interval display
see ASSYST PLUS
Service station search
Starting automatic search 368
Setting a speed
see Cruise control
Setting the date format 337
Setting the distance unit 341
Setting the map scale
see Map
Shift paddles
see Steering wheel gearshift paddles
Shifting gears
Gearshift recommendation 178, 182
Short messages
see Messages
Side impact airbag 43
Side impact protection 234
Side windows 90
Automatic function 91
Child safety lock in the rear 76
Closing 90
Closing using the key 92
Convenience closing 92
Convenience opening 91
Opening 90
Opening with the key 91
Problem 92
Rain-closing feature 91
Sliding sunroof 94
Automatic functions 96
Closing 94
Closing using the key 92
Opening 94
Opening with the key 91
Problem 97
Rain closing function 96

Smartphone
Locking the vehicle 84
Unlocking the vehicle 84
Smartphone
see Android Auto
see Apple CarPlay®
see Mercedes-Benz Link
see Telephone
Snow chains 494
Socket (12 V) 128
Front centre console 128
Load compartment 130
Socket (115 V) 128
Rear 128
Socket (230 V) 129
Rear 129
Software update 343
Information 343
Performing 344
System updates 344
Sound
PRE-SAFE® Sound 50
Wheels and tyres 493
Sound
see Burmester® surround sound system
see Tone settings
Sound settings
Adjusting the balance/fader 450
Adjusting treble, mid-range and bass settings 450
Automatic volume adjustment 450
Spare wheel
see Collapsible spare wheel
see Emergency spare wheel
Speech dialogue system
see LINGUATRONIC
Speed Limit Assist 251
Function/notes 251
Setting 253
System limitations 251
Speed limitation for winter tyres
Setting 216
Speedometer
Digital 274
Standby mode
Activating/deactivating 200
Function 200
Standing lights 134
Start-off assist 230
Activating 230
Function 230
Start/stop button
Parking the vehicle 191
Starting the vehicle 165
Switching on the power supply or ignition 164
Start/stop function
see ECO start/stop function
Starting assistance
see Jump-start connection
Starting the engine
see Vehicle
Starting-off aid
see Hill Start Assist
Station
Deleting 449
Direct frequency entry 449
Frequency fix 449
Moving 449

Searching ... 449
Setting ... 448
Storing ... 449
Station list
Calling up ... 449
Station presets
Modifying ... 449
Station tracking
Setting ... 449
Stationary heater/ventilation
Displays (remote control) ... 160
Problems (remote control) ... 162
Replacing the battery (remote control) ... 161
Setting (multimedia system) ... 159
Setting (remote control) ... 159
Switching on/off (control panel) ... 158
STEER CONTROL
Function/notes ... 206
Steering wheel ... 268
Adjusting (manually) ... 108
Buttons ... 268
Steering wheel heater ... 109
Steering wheel gearshift paddles ... 181
Steering wheel heater
Switching on/off ... 109
Stowage areas
see Loading
see Stowage compartment
Stowage compartment ... 113
Armrest ... 113
Centre console ... 113
Door ... 113
Glove box ... 113
Stowage compartment in the glove compartment
Opening ... 113
Stowage compartments
see Loading
see Stowage compartment
Stowage space underneath the load compartment floor ... 121
Suggestions ... 321
Calling up ... 322
Configuring ... 322
Deleting ... 323
Overview ... 321
Renaming ... 323
Sulphur content ... 524
Sun visor
Operating ... 153
Surround lighting
Switching on/off ... 142
Surround View
see 360° Camera
Suspension
Adaptive damping adjustment ... 231
Damping characteristics ... 231
SVHC (substances of very high concern) ... 32
Switch-off delay time
Exterior ... 141
Interior ... 143
Switching volume adjustment on/off
Advanced sound system ... 452
Synchronisation function
Activating/deactivating (multimedia system) ... 157
Switching on/off (control panel) ... 157

System settings
Activating/deactivating PIN protection ... 342
Reset function (multimedia system) ... 345
Setting the distance unit ... 341
Setting the time and date automatically ... 337
Setting the time zone ... 337
Setting the time/date format ... 337
Switching transmission of the vehicle position on/off ... 338

System settings
see Bluetooth®
see Data import/export
see Language
see Software update
see Wi-Fi

T

Tailgate ... 88
Closing ... 89
Opening ... 88
Opening dimensions ... 532
Unlocking (emergency key) ... 89

Tailpipes (Care) ... 467

Take-back of end-of-life vehicles ... 22
Protection of the environment ... 22

Tank content
AdBlue® ... 528
Fuel ... 527
Reserve (fuel) ... 527

Technical data
Axle load (trailer operation) ... 535
Fastening points (trailer hitch) ... 534
Information ... 519
Mounting dimensions (trailer hitch) ... 534
Notes (trailer hitch) ... 533
Overhang dimension (trailer hitch) ... 534
Tongue weight ... 535
Towing capacity (trailer operation) ... 534
Vehicle identification plate ... 521

Telephone ... 278, 399
Activating functions during a call ... 404
Calls with several participants ... 404
Changing a function ... 401
Connecting a mobile phone (Near Field Communication (NFC)) ... 402
Connecting a mobile phone (Passkey) ... 400
Connecting a mobile phone (Secure Simple Pairing) ... 400
Disconnecting a mobile phone ... 402
Importing contacts ... 407
Importing contacts (overview) ... 406
Incoming call during an existing call ... 405
Information ... 400
Interchanging mobile phones ... 401
Locking the vehicle (mobile phone) ... 84
Menu (on-board computer) ... 278
Mobile phone voice recognition ... 404
Notes ... 397
Operating modes ... 400
Reception and transmission volume ... 403
Replacing mobile phones ... 401
Setting the ringtone ... 403
Starting the vehicle (mobile phone) ... 166
Switching mobile phones (Near Field Communication (NFC)) ... 402
Telephone menu overview ... 399
Telephone operation ... 404
Unlocking the vehicle (mobile phone) ... 84
Using Near Field Communication (NFC) ... 402

Voice commands (LINGUATRONIC) 292
Wireless charging (mobile phone) 132
Telephone number
Dialling (on-board computer) 278
Telephone operation
see Calls
Telephony operating modes
Bluetooth® Telephony 400
Temperature 154
Text messages
Voice commands (LINGUATRONIC) 297
Text messages
see Messages
Themes 319
Calling up 320
Deleting 321
Fastening 320
Modifying 321
Moving 321
Overview 319
Through-loading feature
see Load compartment
see Seat
Tie-down eyes 119
Time
Manual time setting 337
Setting the time and date automatically 337
Setting the time zone 337
Setting the time/date format 337
TIREFIT kit 474
Declaration of conformity 30
Storage location 474
Using 475
Tone settings 450
Calling up the sound menu 450
Information 450
Tongue weight 535
Tool
see Vehicle tool kit
Top Tether 67
Total distance 274
Displaying 274
Touch Control 305
On-board computer 269
Operating 305
Setting acoustic operating feedback ... 306
Setting the sensitivity 306
Touchpad 307
Activating/deactivating haptic operating feedback 309
Operating 307
Reading the handwriting recognition aloud 308
Selecting a station and track 309
Setting acoustic operating feedback ... 309
Setting the sensitivity 308
Touchscreen (media display)
Entering characters 333
Operating 306
Setting acoustic operating feedback ... 307
Tow-away protection
Function 100
Priming/deactivating 100
Tow-bar system 266
Tow-starting 489
Towing away 485
Towing eye
Installing 489

Storage location 488
Towing methods 484
Traffic announcements
Activating/deactivating 450
Traffic information 377
Car-to-X-Communication 380
Displaying the traffic map 378
Displaying traffic incidents 379
Extending a Live Traffic Information subscription 378
Live Traffic Information 378
Overview 377
Registering Live Traffic Information 378
Switching on the display 380
Traffic map
see Map
Traffic Sign Assist 253
Function/notes 253
Setting 255
System limitations 253
Trailer hitch
Axle load 535
Bicycle rack 264
Care 467
Coupling up/uncoupling a trailer 263
Fastening points 534
Folding the ball neck out/in 261
General notes 533
Mounting dimensions 534
Notes 261
Overhang dimension 534
Socket 263
Tongue weight 535
Towing capacity 534
Trailer operation
Active Blind Spot Assist 257
Active Lane Keeping Assist 258
Bicycle rack 264
Coupling up/uncoupling a trailer 263
Folding the ball neck out/in 261
Notes 261
Socket 263
Trailer stabilisation
Function/notes 205
Transferred vehicle data
Android Auto 420
Apple CarPlay® 420
Transmission (problem) 184
Transmission position display 178
Transporting
Vehicle 487
Trim element (Care) 469
Trip
Menu (on-board computer) 274
Trip computer
Displaying 274
Resetting 275
Trip distance 274
Displaying 274
Resetting 275
Trip meter
see Trip distance
TuneIn
Calling up 435
Calling up the station list (category last selected) 438
Deleting stations 438
Logging out 438
Overview 437
Registering 438
Saving stations 438

Selecting and connecting to a station ... 437
Selecting stream ... 438
Setting options ... 438
Terms of use ... 438

Turn signal indicator
see Turn signal lights

Turn signal lights ... 136
Changing bulbs (rear) ... 146
Switching on/off ... 136

Two-way radios
Frequencies ... 520
Notes on installation ... 519
Transmission output (maximum) ... 520

Tyre inflation compressor
see TIREFIT kit

Tyre pressure ... 495
Checking (tyre pressure monitoring system) ... 497
Notes ... 494
Restarting the tyre pressure loss warning system ... 502
Restarting the tyre pressure monitoring system ... 497
TIREFIT kit ... 475
Tyre pressure loss warning system (function) ... 502
Tyre pressure monitoring system (function) ... 496
Tyre pressure table ... 495

Tyre pressure loss warning system
Function ... 502
Restarting ... 502

Tyre pressure monitor ... 498
Function ... 496

Tyre pressure monitoring system
Checking the tyre pressure ... 497
Checking the tyre temperature ... 497
Restarting ... 497

Tyre pressure table ... 495

Tyre temperature
Checking (tyre pressure monitoring system) ... 497
Tyre pressure monitoring system (function) ... 496

Tyre tread ... 493

Tyre-change tool kit
Overview ... 507

Tyres
Changing hub caps ... 508
Checking ... 493
Checking the tyre pressure (tyre pressure monitoring system) ... 497
Fitting ... 511
Flat tyre ... 473
Interchanging ... 506
MOExtended tyres ... 473
Noise ... 493
Notes on fitting ... 503
Removing ... 511
Replacing ... 503, 508
Restarting the tyre pressure loss warning system ... 502
Restarting the tyre pressure monitoring system ... 497
Selection ... 503
Snow chains ... 494
Storing ... 507
TIREFIT kit ... 475
Tyre pressure (Notes) ... 494

Tyre pressure loss warning system (function) 502
Tyre pressure monitoring system (function) 496
Tyre pressure table 495
Unusual handling characteristics 493

U

Units of measurement
Setting 341
Unlocking setting 79
USB port 130
User profile
see Profile

V

Vehicle 167
Activating/deactivating standby mode 200
Additional door lock 82
Correct use 31
Damage detection (parking) 199
Data acquisition 32
Data storage 32
Diagnostics connection 30
Equipment 24
Implied warranty 32
Locking (automatically) 86
Locking (digital vehicle key sticker) 84
Locking (from the inside) 83
Locking (KEYLESS-GO) 85
Locking (mobile phone) 84
Locking/unlocking (emergency key) 87
Lowering 512
Parking up 200
QR code rescue card 32
Qualified specialist workshop 31
Raising 509
REACH regulation 32
Registration 31
Standby mode function 200
Starting (Digital Vehicle Key sticker) 166
Starting (emergency operation mode) 167
Starting (mobile phone) 166
Starting (Remote Online) 168
Starting (start/stop button) 165
Switching off (start/stop button) 191
Towing 266
Unlocking (digital vehicle key sticker) 84
Unlocking (from the inside) 83
Unlocking (KEYLESS-GO) 85
Unlocking (mobile phone) 84
Ventilating (convenience opening) 91
Voice commands (LINGUATRONIC) 299
Vehicle data
Displaying (DYNAMIC SELECT) 176
Roof load 533
Transferring to Android Auto 420
Transferring to Apple CarPlay® 420
Vehicle height 532
Vehicle length 532
Vehicle width 532
Wheelbase 532
Vehicle dimensions 532
Vehicle identification number
see VIN
Vehicle identification plate 521
EU general operating permit number 521
Paint code 521
Permissible axle load 521
Permissible gross mass 521
VIN 521

Vehicle interior
Cooling or heating (Remote Online) 168
Vehicle key
see Key
Vehicle maintenance
see ASSYST PLUS
Vehicle position
Switching transmission on/off 338
Vehicle tool kit 474
TIREFIT kit 474
Towing eye 488
Ventilating
Convenience opening 91
Ventilation
see Climate control
Vents
see Air vents
VIN 521
Engine compartment 521
Identification plate 521
Windscreen 521
Vision
Demisting windows 157
Voice control system
see LINGUATRONIC

W

Warning lamps
see Warning/indicator lamps
Warning system
see ATA (anti-theft alarm system)
Warning triangle
Removing 471
Setting up 472
Warning/indicator lamp
ABS warning lamp 604
Brake system warning lamp (red) 602
Brake system warning lamp (yellow) 601
Coolant warning lamp 598
Electrical fault warning lamp 600
Engine diagnosis warning lamp .. 599
ESP® OFF warning lamp 606
ESP® warning lamp flashes 605
ESP® warning lamp lights up 605
Fuel reserve warning lamp 600
Red indicator lamp, electric parking brake applied 601
Restraint system warning lamp .. 595
Seat belt warning lamp flashes .. 595
Seat belt warning lamp lights up 596
Trailer tow hitch warning lamp ... 596
Tyre pressure monitoring system warning lamp flashes 607
Tyre pressure monitoring system warning lamp lights up 607
Warning lamp for distance warning function 603
Warning lamp for electric power steering 597
Yellow electric parking brake indicator lamp is malfunctioning 601

Warning/indicator lamps 593
Overview 593
PASSENGER AIR BAG 48
Warranty 32
Washer fluid
see Windscreen washer fluid
Washing by hand (care) 463
Water tank
see Air-water duct
Weather information 391
Web browser
Calling up a web page 433
Calling up options 434
Calling up the settings 435
Deleting a bookmark 435
Deleting Internet history 435
Ending 435
Managing bookmarks 435
Overview 434
Website
Calling up 433
Wheel change
Fitting a new wheel 511
Lowering the vehicle 512
Preparation 508
Raising the vehicle 509
Removing a wheel 511
Removing/fitting hub caps 508
Wheel change
see Emergency spare wheel
Wheel rotation 506
Wheels
Care 467
Changing hub caps 508
Checking 493
Checking the tyre pressure (tyre pressure monitoring system) 497
Fitting 511
Flat tyre 473
Interchanging 506
MOExtended tyres 473
Noise 493
Notes on fitting 503
Removing 511
Replacing 503, 508
Restarting the tyre pressure loss warning system 502
Restarting the tyre pressure monitoring system 497
Selection 503
Snow chains 494
Storing 507
TIREFIT kit 475
Tyre pressure (Notes) 494
Tyre pressure loss warning system (function) 502
Tyre pressure monitoring system (function) 496
Tyre pressure table 495
Unusual handling characteristics 493
Wi-Fi 338
Overview 338
Setting 339
Setting up a hotspot 340
Setting up an Internet connection 430
Widescreen cockpit instrument display
Instrument cluster 12
Window airbag 43
Windows
see Side windows

Windows (Care) 467
Windscreen 154
Defrosting 154
Windscreen
see Windscreen
see Windshield
Windscreen washer fluid 531
Notes 531
Windscreen washer system
Topping up 460
Windscreen wipers
Changing the wiper blades 147
Switching on/off 146
Windshield 147
Changing the wiper blades 147
Wing
see Front wheel arch
Winter operation
Snow chains 494
Winter tyres
Setting the permanent speed limitation 216
Wiper blades
Care 467
Replacing 147
Wireless charging
Function/notes 131
Mobile phone 132
Wireless vehicle components
Declaration of conformity 25, 29
Workshop
see Qualified specialist workshop

Publication details

Internet
Further information about Mercedes-Benz vehicles and about Daimler AG can be found on the following websites:

https://www.mercedes-benz.com

https://www.daimler.com

Documentation team
You are welcome to forward any queries or suggestions you may have regarding this Owner's Manual to the technical documentation team at the following address:

Daimler AG, HPC: CAC, Customer Service,
70546 Stuttgart, Germany

©Daimler AG: not to be reprinted, translated or otherwise reproduced, in whole or in part, without written permission from Daimler AG.

Vehicle manufacturer
Daimler AG

Mercedesstrasse 137

70327 Stuttgart

Germany

As at 03.11.19



Digital – in the vehicle

Familiarise yourself with the contents of the Owner's Manual directly via the vehicle's multimedia system (menu item "Vehicle information"). Start with the quick guide or broaden your knowledge with practical tips.



Vehicle document wallet

Here you can find comprehensive information about operating your vehicle and about services and guarantees in printed form.



Digital – on the Internet

You can find the Owner's Manual on the Mercedes-Benz homepage.



Digital – as an App

The Mercedes-Benz Guides App is available free-of-charge in familiar App stores.

1775847506Z102

Order no. P177 0360 02 Part no. 177 584 75 06 Z102
Edition ÄJ2019-2a

Apple® iOS

Android™