V-Class

Owner's Manual +

Mercedes-Benz

F447 0092 02

Did you know?

In order to meet all needs, your operator's manual is available to you in various formats.
In addition to this PDF, the following options are open to you:

Digital in the vehicle
Discover the Operating Instructions in the multimedia system under Settings. Begin with Quick Start and discover useful tips.

Digital on the Internet
You can access the Operating Instructions on the Mercedes-Benz homepage https://om.mb4.me/WebOMs

Vehicle document wallet in the vehicle
Here you can find information on operation, service work and the warranty for your vehicle in printed form.

Digital as an app
The Mercedes-Benz Guides app is available free of charge in the customary app stores.

Apple® iOS

Android™

Front passenger airbag warning

Observe the chapter "Children in the vehicle".

WARNING
Risk of injury or fatal injuries if the front passenger airbag is enabled

If the front passenger airbag is enabled, a child on the front passenger seat may be struck by the front passenger airbag during an accident.

► NEVER use a rearward facing child restraint system on a seat protected by an ACTIVE AIRBAG in front of it, DEATH or SERIOUS INJURY to the CHILD can occur.

Welcome to the world of Mercedes-Benz

Before you first drive off, read these Operating Instructions carefully and familiarise yourself with your vehicle. For your own safety and a longer operating lifespan, follow the instructions and warning notices in these Operating Instructions. Disregarding them may lead to damage to the vehicle or injury to people.

THE EQUIPMENT FEATURES OR PRODUCT DESIGNATIONS OF YOUR VEHICLE MAY DIFFER FROM THE CONTENT DESCRIBED IN THE OPERATING INSTRUCTIONS. THE OPERATING INSTRUCTIONS DESCRIBE THE FOLLOWING CONTENT:

- The models and the standard and special equipment available at the time of these Operating Instructions going to press.
- The models and the standard and special equipment only available in certain countries.
- The models and the standard and special equipment which will only become available at a later date.

Please note that your vehicle may not be equipped with all features described. This also applies for systems and functions relevant to safety. Your vehicle may therefore differ, in individual cases, from that shown in the descriptions and illustrations.

MERCEDES-BENZ KEEPS ADVANCING ITS VEHICLES CONSTANTLY AND THEREFORE RESERVES THE RIGHT TO INTRODUCE CHANGES IN THE FOLLOWING AREAS:

- Design
- Equipment
- Technical features

The latest and complete information about your vehicle and the description of any subsequently uploaded functions are contained in the Digital Operating Instructions in the multimedia system.

The illustrations in these Operating Instructions show a left-hand drive vehicle. On right-hand drive vehicles, the layout of vehicle components and control elements differs accordingly.

The original purchase agreement for your vehicle includes a list of the equipment features in your vehicle at the time of delivery.

THE FOLLOWING DOCUMENTS ARE COMPONENTS OF THE VEHICLE:

- Digital Operating Instructions in the multimedia system
- Printed Operating Instructions
- Service booklet
- Equipment-dependent supplements
- Supplementary documents

Always keep these documents in the vehicle. Ensure that all documents are in the vehicle or passed on when the vehicle is sold or loaned out.

For questions concerning equipment and operation, please contact a Mercedes-Benz service centre.

F447 0092 02

Disclaimer
The following online version of the Owner's Manual describes all models, standard and special equipment of your vehicle. Country-specific differences in the language variants are possible. Note that your vehicle may not be fitted with all functions described. This is also the case for systems and functions relevant to safety.

Please contact your authorised Mercedes-Benz dealer in order to receive a printed Owner's Manual for other vehicle models and vehicle model years. The online Owner's Manual represents the respective current version. Any deviations from your concrete vehicle many not be taken into account, as Mercedes-Benz constantly adapts its vehicles to the latest state of the art, and makes changes to the design and equipment.

Please also read the printed Owner's Manual, supplementary documents and the digital Owner's Manual in the vehicle.

COPYRIGHT
All Rights Reserved. All texts, images and graphics are subject to copyright law and other laws protecting intellectual property. They may not be copied or changed for any commercial use or for the purpose of being passed on nor used on other websites.

F447 0092 02

Contents

This interactive PDF works like a website – tap or click a button to jump straight to where you want to go.
You can return here at any time via the navigation bar at the top left.

Symbols
Quick start and Tips
At a glance
Digital Owner's Manual
General notes
Occupant safety
Children in the vehicle
Opening and closing
Seats and stowage
Light and vision
Climate control
Driving and parking
Driver display
MBUX Voice Assistant
Mercedes-Benz Support calls and Digital Extras
MBUX multimedia system
Transporting
Maintenance and care
Breakdown assistance
Wheels and tyres
Technical data

Display messages and warning and indicator lamps

Index

Symbols

This interactive PDF works like a website – tap or click a button to jump straight to where you want to go.
You can return here at any time via the navigation bar at the top left.

In these Operating Instructions, you will find the following symbols:

WARNING
Danger due to not observing the warning notices

Warning notices draw your attention to hazards that may endanger your health or life, or the health or life of others.

▶ Observe the warning notices.

ENVIRONMENTAL NOTE
Environmental damage due to failure to observe environmental notes

Environmental notes include information on environmentally responsible behaviour or environmentally responsible disposal.

▶ Observe environmental notes.

NOTE
Damage to property due to failure to observe notes on material damage

Notes on material damage inform you of risks which may lead to your vehicle being damaged.

▶ Observe notes on material damage.

These symbols indicate useful instructions or further information that could be helpful to you.

▶	Instructions
(→ page)	Further information on a topic
Display	Messages on the display
⟶	Highest menu level to be selected in the multimedia/audio system
▶▶	Corresponding submenus to be selected in the multimedia/audio system
*	Indicates a cause

Quick start and Tips

This interactive PDF works like a website – tap or click a button to jump straight to where you want to go.
You can return here at any time via the navigation bar at the top left.

Seats and outside mirrors
Children in the vehicle
MULTIBEAM LED
Radio
Wi-Fi hotspot
Connecting a mobile phone
MBUX Voice Assistant
Driving Assistance Package
Parking Package
Navigation destination entry
New features on the multimedia system
At the filling station
Holiday preparations
Luggage and loading
Ice and snow
Help in the event of a breakdown
Expert tips

Seats and outside mirrors

Adjusting the seats

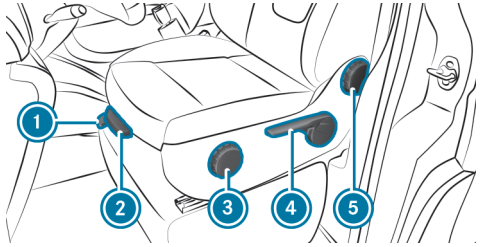

1. Seat fore-and-aft position
2. Seat cushion length
3. Seat cushion inclination
4. Seat height
5. Seat backrest inclination

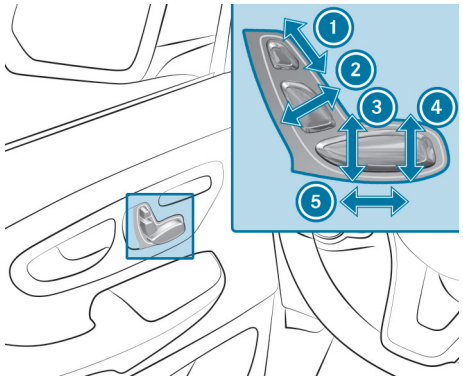

1. Head restraint height
2. Seat backrest inclination
3. Seat height
4. Seat cushion inclination
5. Seat fore-and-aft position

Children in the vehicle

Children in the vehicle

- Always observe these when children are in the vehicle (→ page 154)
- Important warning notices (→ page 155)
- Recommended child restraint systems (→ page 162).
- Approval categories for child restraint systems (→ page 161)
- Suitability of seats for attaching ISOFIX child restraint systems (→ page 166).
  - Suitability of seats for attaching i-Size child restraint systems .
  - Fitting an ISOFIX or i-Size child restraint system on the front passenger and rear seats (→ page 171).
- Attaching a Top Tether belt (→ page 172).
- Suitability of seats for attaching belt-secured child restraint systems (→ page 168).
  - Notes on vehicles without automatic front passenger airbag shutoff (→ page 160)
  - Notes on rear-facing and front-facing child restraint systems on the front passenger seat (→ page 158)
  - Securing the child restraint system with the seat belt (→ page 173)
- Automatic front passenger airbag shutoff (→ page 158)
- Activating or deactivating child safety locks for sliding doors (→ page 174).
- Activating or deactivating child safety locks for hinged windows .

MULTIBEAM LED

Adaptive functions, MULTIBEAM LED

With this system, the headlamps adapt to the weather and the situation on the road. It also provides enhanced functions for improved illumination of the road.

THE SYSTEM COMPRISES THE FOLLOWING ADAPTIVE FUNCTIONS:

- Active light function (→ page 294)
- Cornering light (→ page 294)
- Motorway mode (→ page 294)
- Enhanced fog light function (→ page 295)
- Bad weather light (→ page 295)
- City lighting (→ page 295)
- Topographical compensation (→ page 295)

► **Activating/deactivating MULTIBEAM LED:**
  - Briefly press [⌂] on the multimedia system display.
  - Select Settings .
  - Select Lights .
  - Select MULTIBEAM LED .
  - Activate or deactivate Dynamic low beam.

Radio

Operating Radio

▶ **To switch to radio:**
- Briefly press [⌂] in the multimedia system display.
- Tap on [ ].

▶ **To set the frequency band:**
- Briefly press [⌂] on the multimedia system display.
- Tap on [ ].
- Select a frequency band or a favourite.

▶ **To set a radio station:**
- Briefly press [⌂] on the multimedia system display.
- Tap on [ ].
- Swipe to the left or right on the control element or select a radio station.

▶ **To call up the radio station list:**
- Briefly press [⌂] on the multimedia system display.
- Tap on [ ].
- Select [ ].

▶ **To search for radio stations using station names or frequency entry:**
- Briefly press [⌂] on the multimedia system display.
- Tap on [ ].
- Select [ ].
- Enter a station name or frequency.
- Select a station.

▶ **To store radio stations:**
- Briefly press [⌂] on the multimedia system display.
- Tap on [ ].
- Select [☆].

▶ **To set the traffic information service volume increase:**
- Briefly press [⌂] on the multimedia system display.
- Tap on [⚙].
- Select System.
- Select Audio.
- Select Navigation & traffic announcements.
- Set a value for Traffic announc. vol. increase.

Wi-Fi hotspot

Setting up a Wi-Fi hotspot

GENERALLY, TWO TYPES OF WI-FI CONNECTION ARE AVAILABLE:

- Using the multimedia system as a Wi-Fi hotspot

  The multimedia system serves as a Wi-Fi hotspot for mobile communication devices such as a smartphone or tablet PC.

  The data volume of the vehicle or an already connected tethering device is used for the data connection.

  Data volume must be purchased for a fee via the Mercedes-Benz Portal.

  The use of the vehicle data tariff by external devices is not available in all countries.
- Using a mobile communication device as a Wi-Fi hotspot (tethering)

  An external Wi-Fi hotspot is accessed for the Internet connection of the multimedia system.

  The data tariff of the mobile communication device via Data package is used for the data connection.

OPTIONS FOR SETTING UP A CONNECTION:

- QR code

  The connection is set up by scanning the QR code shown on the multimedia system.
- NFC

  The connection is set up by placing the mobile communication device in the NFC interface of the vehicle.
- Security key

  The connection is established by entering the security key displayed on the multimedia system.

Connecting a mobile phone

Connecting a mobile phone

▶ **Activating Bluetooth®:**

- Make sure that the mobile phone Bluetooth® is switched on.
- Tap on [⌂] the central display or media display.
- Select Settings.
- Select System.
- Select Internet and Bluetooth.
- Activate Bluetooth®.

▶ **Searching for a mobile phone:**

- Tap on [⌂] the central display or media display.
- Select Phone.
- Select [⚙].
- Select Devices.
- Select Devices.
- Select Connect new device.

▶ **Authorising a mobile phone:**

- Select a mobile phone.

A code is displayed in the multimedia system and on the mobile phone.

▶ If the codes match, confirm the code on the mobile phone.

MBUX Voice Assistant

Operating the MBUX Voice Assistant

YOU CAN USE THE MBUX VOICE ASSISTANT TO OPERATE THE FOLLOWING FUNCTIONS DEPENDING ON THE VEHICLE EQUIPMENT:

- Telephone
- Text message and e-mail
- Navigation
- Radio and media
- Vehicle functions
- Online functions

EXAMPLES OF POSSIBLE VOICE COMMANDS:

- To operate the phone: Call my father.
- To manage e-mails: Show me my new e-mails.
- To operate the navigation: Search for an Asian restaurant, but not Japanese, in South London.
- To operate the radio: Which station am I currently listening to?
- To operate media: Play a similar track.
- To operate climate control: My feet are cold.
- To operate vehicle functions: Open the window.
- To call up the weather: Will it be sunny tomorrow?
- To ask a general knowledge question: Who painted the picture "The Scream"?

Driving Assistance Package

Functions of the Driving Assistance Package

The Driving Assistance Package contains various functions that assist you when driving. For this purpose, your vehicle uses cameras and radar sensors to monitor the area in front of, behind or alongside the vehicle.

The following functions are included in the Driving Assistance Package, depending on country-specific availability:

- Active Distance Assist DISTRONIC (→ page 409)
- Active Speed Limit Assist (→ page 416)
- Route-based speed adaptation (→ page 417)
- Active Brake Assist (→ page 396)
- Active Steering Assist (country-dependent) (→ page 421)
- Active Emergency Stop Assist (→ page 423)
- Blind Spot Assist with exit warning (→ page 433)
- Active Lane Keeping Assist (→ page 434)

Parking Package

Functions of the Parking Package

Depending on country-specific availability, your vehicle may be equipped with various functions to assist you with parking and manoeuvring. For this purpose, your vehicle uses cameras and ultrasonic sensors to monitor the vehicle surroundings.

Depending on the respective vehicle equipment, the following systems and functions are included with your Parking Package:

- **Reversing camera:** monitors the area behind the vehicle and shows the area in the media display (→ page 437).
- **360° camera:** a system comprising four cameras which cover the immediate vehicle surroundings and show them in the media display (→ page 439).
- **Parking Assist PARKTRONIC:** an electronic parking assistance system which monitors the area surrounding your vehicle and the distance to obstacles in the vicinity using ultrasound (→ page 445).
- **Active Parking Assist:** an electronic parking assistance system which assists you when parking in or exiting a parking space by changing gear, accelerating, braking and steering the vehicle (→ page 448).
- **Trailer Manoeuvring Assist:** Trailer Manoeuvring Assist assists you when reversing with a trailer. The reversing camera monitors the articulation angle between the vehicle and the trailer and adjusts it to a specified value. Trailer Manoeuvring Assist also limits your speed (→ page 458).

Navigation destination entry

Navigation destination entry

► Briefly press [⌂] in the multimedia system display.

► Select Navigation.

► Select [🔍].

SELECT THE FOLLOWING OPTIONS FOR DESTINATION ENTRY:

- Enter a POI, an address or a three-word address from what3words in the input line.

  Online search results for POIs (if available) may contain additional information, for example opening times and ratings. The information is provided by an online map service.

  You can find further information about three-word addresses at: http://what3words.com
- Select a destination suggestion.

  Requirements:

  The Navigation option is switched on in the user settings for Suggestions.

  The multimedia system has gathered sufficient data in order to show destination suggestions.
- Select Previous destinations.

  Select a previous destination.

  You can save the destination as a favourite .
- Select POIs.

  Select a POI category, e.g. [P] or enter a POI name or POI category in the input line.

  If search results are displayed, limit them with Filter, for example by search position or the desired travel time.
- Select Contacts.

  Requirements:

  A mobile phone is connected to the multimedia system and contacts have been downloaded.

  The contact contains a navigable address.
- Enter the geocoordinates as latitude and longitude in the input line.

  Example 1: 47°58'11"N 7°57'25"E (degrees, minutes, seconds and compass direction)

  Example 2: 47.969722 7.956944 (decimal degrees)
- Select a destination on the map .
- Select Favourites.

  Requirements:

  The destinations have been saved as favourites.
- Select Received destinations.

  Requirements:

  To receive external destinations there must be an internet connection.

  The destinations have been sent to the vehicle.

New features on the multimedia system

Information about the telephone menu

1. Bluetooth® device name of the currently connected mobile phone/the mobile phones
2. Bluetooth® device name of the other currently connected mobile phone/of the mobile phone
3. Signal strength of the mobile phone network
4. Battery status of the connected mobile phone
5. Options
6. Messages
7. Calls up my devices
8. Numerical pad
9. Starts contact search

TELEPHONE MENU OVERVIEW

Via the telephone menu you can use the functions in connection with your mobile phone.

THE FOLLOWING FUNCTIONS CAN BE USED:

- Call lists
- Contacts
- Messages
- Device manager

USING CALL LISTS

If your mobile phone supports the PBAP Bluetooth® profile, the call lists from the mobile phone are displayed in the multimedia system.

THE FOLLOWING FUNCTIONS ARE AVAILABLE:

- Making calls from the call list
- Opening contacts on the call list

MESSAGES

In the message menu you can receive text messages and create and send them with the help of the MBUX Voice Assistant. In addition, you can conveniently use the read-aloud function during the journey.

DEVICE MANAGER

In the device manager, you can connect your mobile phone with the multimedia system.

You have the option of using your mobile phone alone in single telephone mode or together with another mobile phone in two phone mode.

USING CONTACTS
If you permit the multimedia system to access the contacts in your mobile phone, you can use these in the vehicle. You can store up to 8,000 contacts.

THE FOLLOWING OPTIONS ARE AVAILABLE TO YOU VIA THE CONTACTS MENU:

- Making telephone calls (calling a contact)
- Navigating
- Composing messages with the help of the MBUX Voice Assistant
- Additional options

The contacts from your mobile phone can be downloaded automatically or manually.

CONDUCTING A CALL
When conducting a call, additional functions are available apart from making, accepting or rejecting a call. For example, you can switch between calls, conduct a call with several participants or conference calls.

It is also possible to accept or reject waiting calls. If you receive a call while already in a call, a message is displayed.

DURING A CALL YOU CAN ACTIVATE THE FOLLOWING FUNCTIONS:

- Microphone off
- Fade in the numerical pad to send DTMF tones
- Add a call
- Hands-free mode to transfer the call to the front or rear passenger compartment
- Privacy mode to transfer the call to the telephone or headphones

Information about navigation

DIGITAL MAP AND USER-SPECIFIC APPLICATIONS

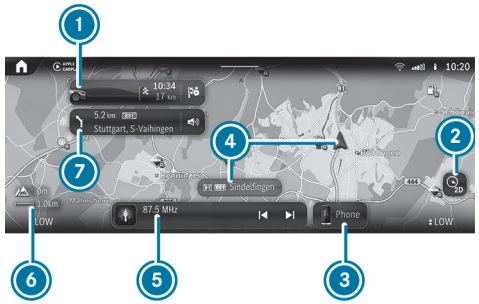

1. Navigation module (reduced view)
   Route guidance active:
   The navigation module shows the information relevant to the route in the zoomed-out view, e.g. the destination or a traffic delay
   [⊗] Ends the current route guidance
   Tapping opens the navigation module and displays the route overview
2. Sets map orientation [⊘] and map type
3. Calls up the telephone menu
4. Current vehicle position (vehicle symbol or arrow)
5. Calls up entertainment applications
6. Elevation and map scale
7. Navigation window shows the next driving manoeuvre (zoomed out view) or the route monitor (zoomed in view)
   Route guidance active: route monitor shows, e.g. route sections, upcoming driving manoeuvres with lane recommendations, destination, traffic delays, 3D images at motorway exits, online content

NAVIGATION MODULE (EXPANDED VIEW)

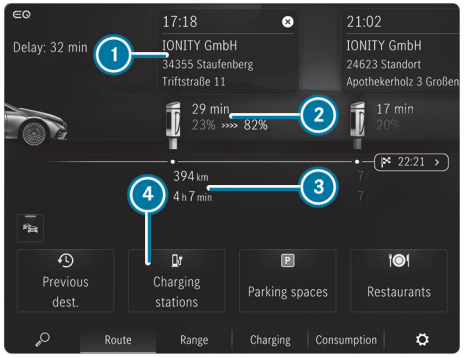

1. Arrival time at charging stop, type of charging station
2. Charging stop shows the charging time recommended by the Navigation with Electric Intelligence as well as states of charge on arrival and onward journey for an optimal travel time
3. Distance from current vehicle position and remaining driving time
4. Searches for an additional charging station

The navigation system offers many options for destination entry, route planning and route guidance. The traffic situation is taken into account during route guidance. When using route guidance with augmented reality, additional information can be shown in a camera image before a turning manoeuvre. Services and apps help you reach the destination quickly, safely and in comfort.

You start the destination entry with [ ] or in the home screen using the [ ] quick-access beneath the application. You can enter the POI, address or contact as the destination on-board or search online using a map service. Or you select a previous destination. The destination can be stored here as a favourite or be saved as an address for home and work. If the Allow destination suggestions option is active, destination suggestions are available. These are determined based on your driving habits and offer a convenient selection of destinations. If external destinations and routes are received from apps or services, these are also available.

A destination can be shared by scanning it using the displayed QR code.

THE FOLLOWING OPTIONS ARE AVAILABLE FOR ROUTE PLANNING, FOR EXAMPLE:

- Route options:
  e.g. avoid or use toll roads, tunnels, unpaved roads or areas
- Intermediate destinations
- Alternative routes
- Commuter route
- Automatic service station search

You can record and save routes then select or share them with a USB device.

Lane recommendations are shown during route guidance on multi-lane roads. When driving on a motorway, service facilities on the route ahead can be shown and used for route guidance.

The Live Traffic Information service takes the current traffic situation into account. The map can show the current traffic flow, incidents or warning messages, e.g. the tail end of a traffic jam in a dangerous position.

Hazardous situations on public roads are detected automatically by the vehicle via Car-to-X-Communication or these can be reported by the driver. The early warning makes it possible to adapt your driving characteristics in good time. Broken-down vehicles, accidents, weather hazards or a deployed hazard warning light are shown on the map.

The map shows map data from the database or content from an online map service. In small map scales, buildings are shown as realistic images.

Weather information and data from other services can be integrated in the map. Multi-storey car parks with the corresponding equipment deliver data about the current occupancy and parking fees, for example. The online map update service makes possible the updating of the map data.

The options offered vary depending on the country, vehicle equipment and available services.

Information on radio

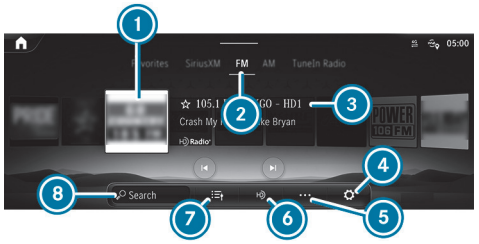

1. Preview picture
2. Active frequency band
3. Station name or set frequency
4. Settings
5. Options
6. Switches HD Radio™ on/off
7. Station list
8. Search

Using the radio menu you can play a multitude of radio stations and use the Internet Radio TuneIn. Search for your preferred stations and save these as favourites or in station lists.

> ⓘ The function of TuneIn Internet radio is country-dependent.

Radio text: this function shows you the station name, the track and the artist for the song currently playing, for example.

Information on media

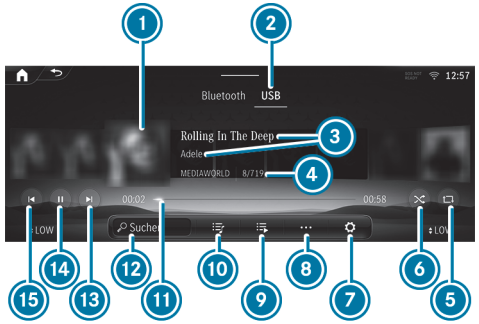

1. Album cover
2. Active media source
3. Track and artist
4. Active data storage medium and current track number/track in playback list
5. Repeat
6. Random playback
7. Settings
8. Additional options
9. Additional categories
10. Playlists and categories
11. Timeline
12. Media search
13. Next track or fast forward

⑭ Controls playback
⑮ Previous track or fast rewind

Using the Media application, you can set and use the audio and video recording functions of your multimedia system. You can listen to music or look at videos, for example.

USB: Using the USBmenu, you can play back your own audio or video data from a data storage medium connected by USB.

Bluetooth®: using the Bluetooth menu, you can connect a Bluetooth® audio device with the multimedia system and play back the available tracks on the audio device. Connecting the device can be conveniently handled in the device manager, so you can complete all settings with just a few clicks.

Online music: the Online music menu allows you to access music streaming services.

Information about smartphone integration

Using the Smartphone Integration menu, various applications are available that can bring the functions of your mobile phone to the multimedia system display. Operation can by carried out via the touchscreen or voice control, for example.

Only one mobile phone at a time can be connected via Smartphone Integration to the multimedia system. Also for use with two phone mode with smartphone integration, only one additional mobile phone can be connected using Bluetooth® with the multimedia system.

Use Android Auto for mobile phones with the Android operating system and use Apple CarPlay® with your iPhone®. The full functionality of Android Auto and Apple CarPlay® is only possible with an Internet connection.

Information about vehicle info

Using the Info menu you can have important information about your vehicle shown. This gives you an overview of, for example, vehicle data or current consumption values at a glance. In addition, you can call up the Digital Owner's Manual via the Owner's Manual menu item (→ page 98).

VEHICLE DATA

THE FOLLOWING DATA WILL BE SHOWN, FOR EXAMPLE:

- Activity of the acceleration and brake pedal
- Activity of the suspension strut
- Wheel angle
- G-forces for the linear and lateral acceleration.

CONSUMPTION VALUES

Depending on your driving style, this display shows you the current and average consumption of the vehicle. Together with the displays of vehicle data, you can adapt your driving style to be as efficient and economical as possible.

Information on MB Apps/Digital Extras

VARIOUS SERVICES AND ONLINE FUNCTIONS ARE AVAILABLE VIA THE MB APPS MENU:

- Managing Digital Extras
- Using the dashcam
- Using the web browser to surf the Internet

You require a Mercedes me ID user account, and have to connect your vehicle with the user account, in order to be able to use offers and services.

ⓘ If the Mercedes-Benz App is available on a mobile phone, the vehicle link can be made via the displayed QR code.

Please not that the available features are country-dependent.

Information on settings

In Settings you can set the basic configuration for your multimedia system and the vehicle. You have access to all functions in this menu, from switching the driver assistance systems on and off to display and language settings.

THE SETTINGS ARE STRUCTURED IN THE FOLLOWING MENUS:

- Assistance
- Vehicle
- Lights
- System

ASSISTANCE MENU
With the Assistance menu you have direct access to the driver assistance systems which are installed in your vehicle and can either switch these on or off, or configure them according to your wishes.

VEHICLE MENU
HERE YOU CAN ACTIVATE THE FOLLOWING FUNCTIONS, FOR EXAMPLE:

- Automatic folding in of the outside mirrors when parking the vehicle
- Automatic adjustment of the seat and steering wheel, for comfortable entry and exit from the vehicle
- Automatic activation of the 360° camera when selecting reverse gear

LIGHTS MENU
All the light settings can be made in the Lights menu. You can activate or deactivate the Intelligent Light System here, set the duration for which your vehicle should remain lit after parking or unlocking, or switch the function off.

SYSTEM MENU
All important settings for the multimedia system can be made in the System menu.

YOU CAN CARRY OUT THE FOLLOWING SETTINGS, FOR EXAMPLE:

- Setting the system language
- The configuration of Wi-Fi and Bluetooth®
- Setting of time and date

At the filling station

Refuelling the vehicle

WARNING
Risk of fire or explosion from fuel

Fuels are highly flammable.

- Fire, naked flames, smoking and creating sparks must be avoided.
- Before refuelling, switch off the vehicle and, if fitted, the stationary heater and keep switched off during filling.

WARNING
Risk of injury from fuels

Fuels are poisonous and hazardous to your health.

- Do not swallow fuel or let it come into contact with skin, eyes or clothing.
- Do not inhale fuel vapour.
- Keep children away from fuel.
- Keep doors and windows closed during the refuelling process.

If you or other people come into contact with fuel, observe the following:

- Immediately rinse fuel off your skin with soap and water.
- If fuel comes into contact with your eyes, immediately rinse them thoroughly with clean water. Seek medical attention immediately.
- If you swallow fuel, seek medical attention immediately. Do not induce vomiting.
- Change immediately out of clothing that has come into contact with fuel.

WARNING
Risk of fire and explosion due to electrostatic charge

Electrostatic charge can ignite fuel vapour.

- ► Before you open the fuel filler cap or take hold of the pump nozzle, touch the metallic vehicle body.
- ► To avoid creating another electrostatic charge, do not get into the vehicle again during the refuelling process.

WARNING
Risk of fire from fuel mixture

Vehicles with a diesel engine:

If you mix diesel fuel with petrol, the flash point of the fuel mixture is lower than that of pure diesel fuel.

While the vehicle is running, component parts in the exhaust system may overheat without warning.

- ► Never refuel using petrol.
- ► Never mix petrol with diesel fuel.

NOTE
Do not use diesel to refuel vehicles with a petrol engine

IF YOU HAVE ACCIDENTALLY REFUELLED WITH THE WRONG FUEL:

- Do not switch on the vehicle. Otherwise fuel can enter the engine.
  Even small amounts of the wrong fuel could result in damage to the fuel system and the engine. The repair costs are high.

- ► Consult a qualified specialist workshop.
- ► Have the fuel tank and fuel lines drained completely.

NOTE
Do not refuel diesel-engined vehicles with petrol

IF YOU HAVE ACCIDENTALLY REFUELLED WITH THE WRONG FUEL:

- Do not switch on the vehicle. Otherwise fuel can enter the engine.
  Even small amounts of the wrong fuel could result in damage to the fuel system and the engine. The repair costs are high.

- ► Consult a qualified specialist workshop.
- ► Have the fuel tank and fuel lines drained completely.

NOTE
Damage to the fuel system caused by overfilled fuel tanks

- ► Only fill the fuel tank until the pump nozzle switches off.

Requirements:

- The vehicle is unlocked and switched off.
- The auxiliary heating is switched off.
- The front left-hand door is open.

ⓘ Do not get back into the vehicle during the refuelling process. You might build up an electrostatic charge again.

Observe the notes on operating fluids (⟶ page 744).

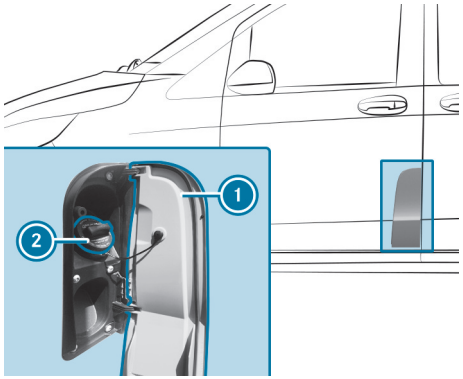

▶ Open fuel filler flap ①.

▶ Turn fuel filler cap ② anti-clockwise and remove it.

▶ Close all vehicle doors to prevent fuel vapours from entering the vehicle interior.

▶ Slide the filler neck of the pump nozzle fully into the tank, hook in place and refuel.

▶ Fill the fuel tank only until the pump nozzle switches off.

▶ Replace the fuel filler cap ② and turn it clockwise.
You will hear a click when the fuel filler cap is closed fully.

▶ Open the front left-hand door.

▶ Close the fuel filler flap ①.

ⓘ **Vehicles with a diesel engine and incorrect fuelling protector against refuelling with petrol:** the filler neck is designed for refuelling at diesel filling pumps for passenger vehicles.

ⓘ **Vehicles with a diesel engine without an incorrect fuelling protector:** refuelling preferred at diesel filling pumps for passenger vehicles. However, you can also refuel at a diesel filling pump for trucks.

ⓘ If the fuel tank has been run completely dry, top up with at least 5 l of fuel. Switch on the vehicle three to four times before starting the vehicle.

Topping up AdBlue®

NOTE
Engine damage due to AdBlue® being in the fuel

- ▶ AdBlue® must not be used to fill the fuel tank.
- ▶ Only use AdBlue® to fill the AdBlue® tank.
- ▶ Do not overfill the AdBlue® tank.

NOTE
Contamination of the vehicle interior due to AdBlue® leakage

- ▶ After topping up, carefully close the AdBlue® refill container.
- ▶ Avoid carrying AdBlue® refill containers permanently in the vehicle.

NOTE
Overfilling the AdBlue® tank due to the vehicle standing at an angle

The AdBlue® tank can only be filled as intended when the vehicle is parked on a level surface. This way, variations in the filling amount are avoided.

When filling the reservoir when the vehicle is standing at an angle, there is a risk of overfilling. This may damage exhaust gas aftertreatment components.

- ▶ Park the vehicle on a level surface to fill the AdBlue® tank.

Requirements:

- The auxiliary heating is switched off.
- The vehicle is switched off.
- The left front door is open.

THE FOLLOWING MESSAGES THAT APPEAR IN SUCCESSION ON THE DRIVER DISPLAY INDICATE THAT YOU NEED TO REFILL THE ADBLUE® CONTAINER:

- Refill AdBlue See Owner’s Manual

  The AdBlue® container level has dropped to the reserve level.
- Top up AdBlue Emergency op. in XXX km See Owner's Manual

  The low AdBlue® level will result in limited performance once the remaining distance displayed has been driven. Top up AdBlue® as soon as possible.
- Top up AdBlue Perf. reduced: XXX km/h No start in XXX km

The vehicle speed is restricted to the speed displayed. You will only be able to drive the vehicle for the distance shown. Subsequently, it will no longer be possible to start the vehicle.

- Refill AdBlue Engine start not possible

  The vehicle can no longer be started.

TOP-UP QUANTITY:

With a prompt on the driver display	min. 8 l
Without a prompt on the driver display	min. 2 l

You can also have the AdBlue® fill level and the AdBlue® range displayed (→ page 379).

OPENING THE ADBLUE® FUEL FILLER CAP

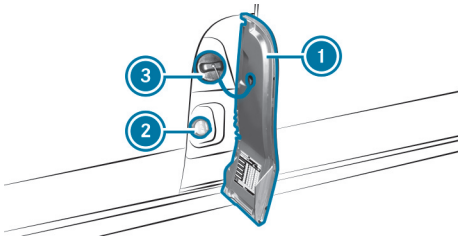

- Open fuel filler flap (1).
- Close all vehicle doors to prevent ammonia vapours from entering the vehicle interior.
- Turn blue AdBlue® fuel filler cap (2) anti-clockwise and remove it.

  Fuel filler cap (3) for the fuel remains closed.

REFUELLING WITH A REFILL CANISTER

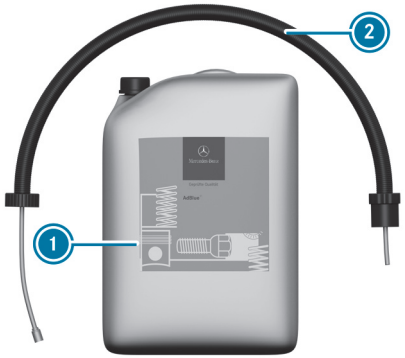

Example

- Unscrew the cap on AdBlue® refill canister (1).
- Screw disposable hose (2) onto the opening of AdBlue® refill canister (1) until finger tight.
- Screw disposable hose (2) onto the filler neck of the vehicle until hand-tight.
- Lift up and tip AdBlue® refill canister (1).

  The filling process stops when the AdBlue® container is completely full.

  AdBlue® refill canister (1) can be removed when it has been only partially emptied.

ⓘ Avoid carrying AdBlue® refill containers permanently in the vehicle.

- First unscrew disposable hose (2) from the vehicle's filler neck, then from AdBlue® refill canister (1).

CLOSING THE ADBLUE® FUEL FILLER CAP

- After filling the AdBlue® container, place the AdBlue® fuel filler cap on the filler neck and tighten it by turning it clockwise.
- Turn the AdBlue® fuel filler cap until the lettering is horizontal and can be read.

  The filler neck is only locked correctly when this is the case.
- Open the front left-hand door first, and then close the fuel filler flap.
- Switch on the vehicle.

  The message in the driver display Refill AdBlue See Owner's Manual must go out after approximately 20 seconds. If the message continues to be displayed, you must add more AdBlue®.

Topping up the windscreen washer system

WARNING
Risk of burns when opening the bonnet

IF YOU OPEN THE BONNET IN THE EVENT OF AN OVERHEATED ENGINE OR FIRE IN THE ENGINE COMPARTMENT, THE FOLLOWING SITUATIONS MAY OCCUR:

- You may come into contact with hot gases.
- You may come into contact with other escaping hot operating fluids.

- Before opening the bonnet, allow the engine to cool down.
- In the event of a fire in the engine compartment, keep the bonnet closed and call the fire service.

WARNING
Risk of injury due to moving parts

Components in the engine compartment can continue to run or start unexpectedly even when the ignition is switched off.

Observe the following before performing tasks in the engine compartment:

- Switch off the ignition.
- Never touch the danger zone surrounding moving components, e.g. the rotation area of the fan.
- Remove jewellery and watches.
- Keep items of clothing and hair away from moving parts.

WARNING
Risk of fire and injury from windscreen washer concentrate

Windscreen washer concentrate is highly flammable.

- Avoid fire, naked flames, smoking and the creation of sparks when using windscreen washer concentrate.

WARNING
Risk of burns from hot component parts in the engine compartment

Certain component parts in the engine compartment can be very hot, e.g. the engine, the cooler and parts of the exhaust system.

- Allow the engine to cool down and only touch component parts described in the following.

NOTE
Damage to the exterior lighting due to unsuitable windscreen washer fluid

Unsuitable windscreen washer fluids may damage the plastic surface of the exterior lighting.

- Only use windscreen washer fluids that are also suitable for use on plastic surfaces, e.g. MB SummerFit or MB WinterFit.

TOPPING UP THE WASHER FLUID

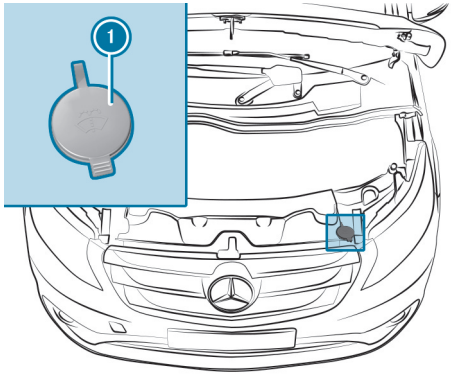

Washer fluid reservoir (example)

- Observe the notes on windscreen washer fluid (⟶ page 56).
- Pull cap (1) upwards by the tab.
- Top up the washer fluid.
- Push cap (1) onto the filler opening until it audibly engages.

Replacing the windscreen wiper blades (WET WIPER SYSTEM)

WARNING
Risk of becoming trapped if the windscreen wipers are switched on while wiper blades are being replaced

If the windscreen wipers begin to move while you are changing the wiper blades, you can be trapped by the wiper arm.

- Always switch off the windscreen wipers and vehicle before changing the wiper blades.

WARNING
Risk of injury from using the windscreen wipers when the bonnet is open

If the windscreen wipers start moving when the bonnet is open, you could be trapped by the wiper linkage.

- Always switch off the windscreen wipers and vehicle before opening the engine bonnet.

REMOVING THE WIPER BLADES

- Fold the wiper arms away from the windscreen.

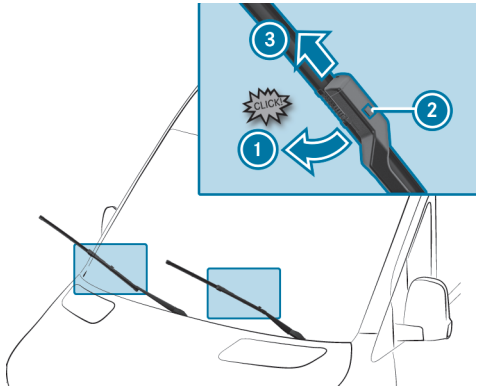

- Hold the wiper arm with one hand. With the other hand, turn the wiper blade in the direction indicated by the arrow 1 beyond the point of resistance.
  The wiper blade engages in the replacement position with a click.
- Press the release button 2, pull the wiper blade in the direction indicated by the arrow 3 and remove.

FITTING THE WIPER BLADES

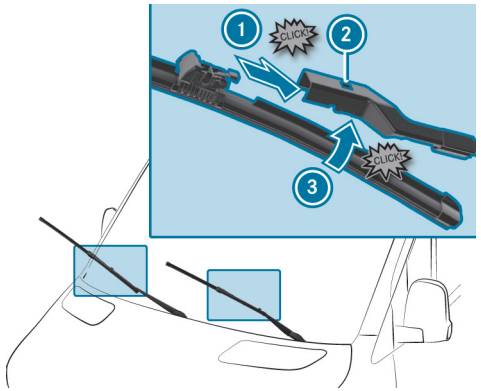

- Push the new wiper blade onto the wiper arm in the direction indicated by the arrow 1 until the release button in the recess 2 engages.
- Rotate the wiper blade toward 3 the wiper arm until it engages.
  The wiper blade engages with an audible click.
- Fold the wiper arm back onto the windscreen.

ⓘ Check the condition of the wiper blades regularly and replace them in the event of visible damage or ongoing smearing.

MAINTENANCE DISPLAY

There is a service indicator at the tip of the newly mounted wiper blades.

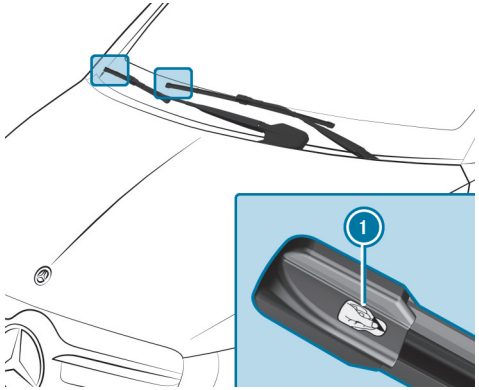

- Remove the protective film 1 from the service indicator.

When the colour of the service indicator changes from black to yellow, replace the wiper blades.

Replacing the windscreen wiper blades

WARNING
Risk of becoming trapped if the windscreen wipers are switched on while wiper blades are being replaced

If the windscreen wipers begin to move while you are changing the wiper blades, you can be trapped by the wiper arm.

- Always switch off the windscreen wipers and vehicle before changing the wiper blades.

NOTE
Damage to the windscreen or rear window when you replace the wiper blade

If a wiper arm is folded back onto the windscreen or rear window and no wiper blade is fitted, the window may be damaged by the force of the impact.

- Never fold a wiper arm back onto the windscreen or rear window without a wiper blade fitted. Hold the wiper arm firmly when a wiper blade is being replaced.

NOTE
Damage to bonnet or windscreen wipers when opening the bonnet

If the windscreen wipers have been folded back from the windscreen when the bonnet is opened, the windscreen wipers or the bonnet may be damaged.

- Ensure that the windscreen wipers have not been folded back from the windscreen.

REMOVING THE WIPER BLADES

- Fold the wiper arms away from the windscreen.

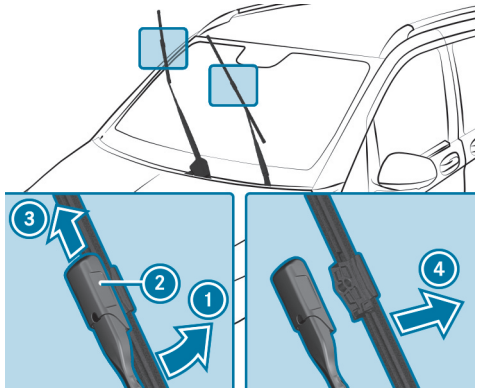

- Hold the wiper arm with one hand. With the other hand, turn the wiper blade away from the wiper arm in the direction indicated by the arrow 1 as far as it will go.
- Slide the catch 2 away from the wiper arm in the direction indicated by the arrow 3 until it engages in the removal position.

- Remove the wiper blade from the wiper arm in the direction indicated by the arrow 4.

FITTING THE WIPER BLADES

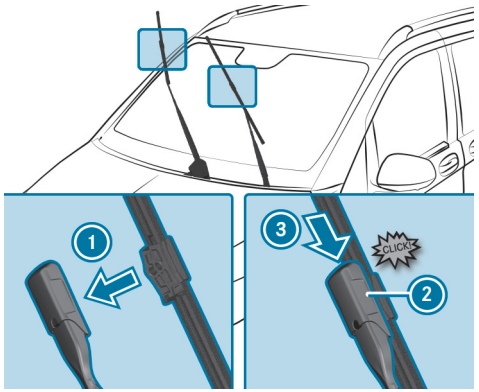

- Insert the new wiper blade into the wiper arm in the direction indicated by the arrow 1.
- Slide the catch 2 in the direction indicated by the arrow 3 until it engages in the locking position.
- Ensure that the wiper blade is seated correctly.
- Fold the wiper arms back onto the windscreen.

MAINTENANCE DISPLAY

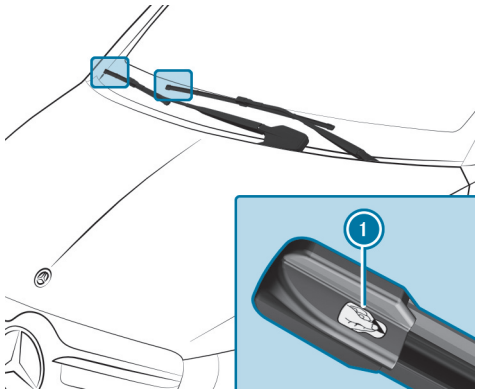

- Remove the protective film 1 from the maintenance displays on the tips of the newly fitted wiper blades.

If the colour of the maintenance display changes from black to yellow, the wiper blades should be replaced.

> ⓘ The time it takes for the colour to change varies depending on the usage conditions.

Checking the engine oil level with the on-board computer

Requirements:

- The vehicle is level during the measuring process.
- The bonnet is closed.

- Depending on the driving profile, the oil level can be displayed only after a driving time of up to 30 minutes and only when the vehicle is switched on.

On-board computer:

Service ▶▶ Engine oil level:

ONE OF THE FOLLOWING MESSAGES APPEARS ON THE DRIVER DISPLAY:

▶ Engine oil level Measuring now...: measurement of the oil level is not yet possible. Repeat the query after driving for a maximum of 30 minutes.

▶ Engine oil level OK and the bar indicating the oil level on the driver display is green and is between "min" and "max": the oil level is correct.

▶ Engine oil level Drive until engine is warm: warm up the engine to operating temperature.

▶ Engine oil level Correct measurement only if vehicle is on level ground: park the vehicle on a level surface.

▶ Engine oil level Top up 1,0 l and the bar indicating the oil level on the driver display is orange and lies below "MIN": add 1 l of engine oil.

▶ Reduce engine oil level and the bar indicating the oil level on the driver display is orange and lies above "MAX": drain off excess engine oil. Consult a qualified specialist workshop.

▶ For engine oil level, switch on vehicle: switch on the vehicle.

▶ Engine oil level System currently unavailable:
- Close the bonnet.
- **The message is persisting:** the sensor is defective or not connected. Consult a qualified specialist workshop.

ⓘ **Vehicles with cold oil level displays:** the oil level will automatically be displayed on the driver display after the vehicle has been non-operational for an extended period. If it is not possible to measure the engine oil level, a message to that effect will appear.

ⓘ The result of the electronic measurement always takes precedence over other measurements.

Notes on washing the vehicle in an automatic car wash

⚠ **WARNING**
Risk of an accident due to reduced braking power after washing the vehicle

Braking efficiency is reduced after washing the vehicle.

▶ After the vehicle has been washed, brake carefully while paying attention to the traffic conditions until braking power has been fully restored.

NOTE
Damage to the vehicle due to automatic braking

WHEN THE FOLLOWING FUNCTIONS ARE ACTIVATED, THE VEHICLE BRAKES AUTOMATICALLY IN CERTAIN SITUATIONS:

- Active Brake Assist
- Active Distance Assist DISTRONIC
- HOLD function

To avoid damage to the vehicle, deactivate these systems in the following or similar situations:

- ▶ when towing
- ▶ in a car wash

NOTE
Damage due to unsuitable car wash

- ▶ Before driving into a car wash make sure that the car wash is suitable for the vehicle dimensions.
- ▶ Ensure there is sufficient ground clearance between the underbody and the guide rails of the car wash.
- ▶ Ensure that the clearance width of the car wash, in particular the width of the guide rails, is sufficient.

TO AVOID DAMAGE TO YOUR VEHICLE, OBSERVE THE FOLLOWING BEFORE USING AN AUTOMATIC CAR WASH:

- Active Brake Assist is deactivated.
- Active Distance Assist DISTRONIC is deactivated.
- The HOLD function is switched off.
- The side windows and roof are completely closed.
- The outside mirrors are folded in and any additional antenna is removed.
- The climate control blower is switched off.
- The windscreen wiper switch is in position 0.

If the vehicle is very dirty, wash off excess dirt before cleaning the vehicle in an automatic car wash.

AFTER LEAVING THE CAR WASH, PAY ATTENTION TO THE FOLLOWING:

- The outside mirrors are fully folded out again and any additional antenna is mounted again.
- Remove wax residues on the windscreen and wiper rubbers to prevent smearing and reduce wiper noise.

Remove wax residues from the camera lens in vehicles with a reversing camera (→ page 653).

Holiday preparations

Notes on adjusting the lights when driving abroad

VEHICLES WITH HALOGEN HEADLAMPS:
It is not necessary to convert the headlamps. The statutory requirements of the countries in which traffic drives on the opposite side of the road to the country in which the vehicle is registered are also met without changing over.

VEHICLES WITH MULTIBEAM LED:
The headlights will automatically be adjusted when you cross the border into countries in which traffic does not drive on the same side of the road.

IN THE FOLLOWING CASES, CHECK THE HEADLAMP SETTING AND CHANGE IT MANUALLY IF NECESSARY:

- If the Low beam setting (left/right-side traffic) Manual adjustment only display message is displayed.
- If the Check low beam setting (left/right-side traffic) display message is displayed.

ⓘ Only if the headlamps are properly adjusted will oncoming traffic not be dazzled.

Notes on regularly inspecting wheels and tyres

⚠ **WARNING**
Risk of injury due to damaged tyres

Damaged tyres can cause tyre pressure loss.

► Check the tyres regularly for signs of damage and replace any damaged tyres immediately.

Check the wheels and tyres of your vehicle for damage regularly, i.e. at least every two weeks, as well as after driving off-road or on rough roads. Damaged wheels can lead to a loss of tyre pressure.

LOOK OUT FOR THE FOLLOWING TYPES OF DAMAGE, FOREXAMPLE:

- cuts in the tyres
- punctures in the tyres
- tears in the tyres
- bulges on tyres
- deformation or severe corrosion on wheels

WARNING
Risk of aquaplaning due to insufficient tyre tread

Insufficient tyre tread will result in reduced tyre grip. There is a risk of an accident.

On a wet road surface the risk of aquaplaning is increased, in particular where speed is not adapted to suit the conditions.

► Check the tread depth and the condition of the tyre contact surface across the entire width of all tyres on a regular basis.

MINIMUM TREAD DEPTH FOR

- Summer tyres: 3 mm
- M+S tyres: 4 mm

► For safety reasons, replace the tyres before the legally-prescribed limit for the minimum tread depth is reached.

► Replace the tyres immediately if the legally-prescribed limit for the minimum tread depth is reached.

CONDUCT THE FOLLOWING CHECKS REGULARLY ON ALL WHEELS, AT LEAST ONCE A MONTH OR AS REQUIRED, E.G.BEFORE A LONG JOURNEY OR WHEN DRIVING OFF-ROAD:

- check the tyre pressure (⟶ page 693)
- check the valve caps
  Valves must be protected from moisture and dirt with valve caps specifically approved by Mercedes-Benz for your vehicle.
- Visually inspect the tread depth and the tyre tread across the whole tyre width
  The minimum tyre tread depth for summer tyres is 3 mm and for winter tyres 4 mm.

Removing the safety vest

The safety vest is located in the door stowage compartment in the driver's door.

► Remove the safety vest out of the door stowage compartment.

ⓘ Safety vests can also be stored in the door stowage compartment of the front passenger door. Observe the legal requirements of the individual countries.

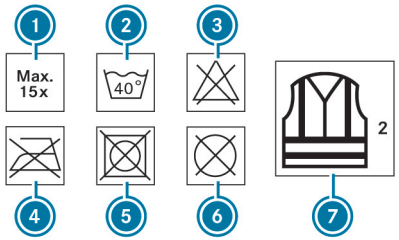

1. Maximum number of washes
2. Maximum wash temperature
3. Do not bleach
4. Do not iron
5. Do not tumble dry
6. Do not dry-clean
7. Class 2 safety vest

The requirements defined by the legal standard are only fulfilled if the safety vest is the correct size and is fully closed.

REPLACE THE SAFETY VEST IN THE FOLLOWING CASES:

- The reflective strips are damaged or dirty
- The maximum permissible number of washes is exceeded
- The fluorescence property decreases, e.g. due to permanent exposure to sunlight.

DISPOSE OF THE SAFETY VEST IN AN ENVIRONMENTALLY FRIENDLY WAY:

- Please contact your local waste disposal company.

Removing the warning triangle

The warning triangle is located in the storage compartment in the driver's door.

► Take the warning triangle out of the storage compartment.

Removing the first-aid kit (soft sided)

The first-aid kit (soft sided) is located in the storage compartment in the front passenger door.

► Remove the first-aid kit (soft sided) from the storage compartment.

Overview of updating the map data

As the content of a digital road map has a short life, outdated data may have a negative effect on all navigation functions. For the best MBUX navigation experience, you should install all of the map updates offered by Mercedes-Benz.

THE FOLLOWING OPTIONS ARE AVAILABLE FOR THE UPDATE OF MAP DATA:

- Online map update
- Updates via the Mercedes-Benz Portal
- Update at a Mercedes-Benz service centre
  Additional costs can be incurred in this process.

ONLINE MAP UPDATE
REQUIREMENTS:

- Digital Extras are available.
- You have a Mercedes me ID.
- The vehicle is linked to your Mercedes me ID and you have accepted the terms of use for the Digital Extra.
  Further information can be found at: https://www.mercedes.me
- The Online Map Update is available for your region.
- The Online Map Update has been activated.

ⓘ The Online Map Update is only available in certain countries.

Installation takes place in the background as an automatic map update.

The MBUX multimedia system installs all of the available map updates for the regions in which the vehicle is located or is moved.

The online map update is activated at the latest after the next time the vehicle is switched on.

UPDATES VIA THE MERCEDES-BENZ PORTAL
The map data for several regions can also be updated manually. Log in with your Mercedes me ID at: https://www.mercedes-benz.de/

Follow the menu path My Mercedes me ID > My vehicles > Selection of car > Online Map Update. Select the regions to be downloaded to a storage medium.

After the map data has been copied, connect the storage medium with your vehicle. Select the notification with information about a new version of the map data and start the installation. After the MBUX multimedia system has been restarted, the updated map data is used.

Entering a POI or address

Requirements

- **For the online search:**
  - There is an Internet connection.
  - Digital Extras are available.
  - You have created a Mercedes me ID.
  - The vehicle is linked to the Mercedes me ID and you have accepted the terms of use.
  - Further information can be found at: https://www.mercedes.me
  - The Digital Extra is available and has been activated.

ⓘ If Online Search is not available, the search is performed using the data of the digital map.

Multimedia system:

Navigation

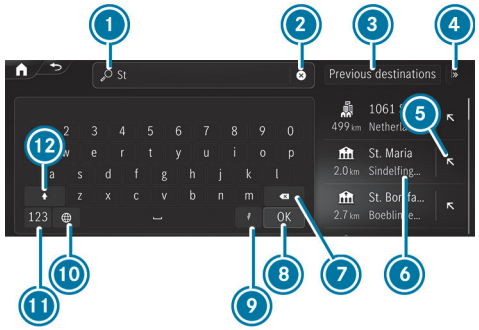

Example: entering a POI or address

1. Input line with current input
2. Deletes an entry
3. Selects previous destinations
4. Displays and selects additional destination searches
5. Adopts the search result in the input line and continues the search
6. Search result
7. Deletes the last character entered
8. Hides the keypad
9. Activates voice input
10. Sets the written language
11. Switches to digits and special characters
12. Switches to upper-case or lower-case letters

▶ Enter the destination. The entries can be made in any order.
The search results are displayed in a list.

ⓘ Online search results for POIs may contain additional information, for example opening times and ratings. The information is provided by an online map service.
This online function is not available in all countries.

THE FOLLOWING ENTRIES CAN BE MADE, FOR EXAMPLE IN ①:

- Town, street, house number or street, town
- Postcode
- POI name or POI category, e.g. Restaurants
- Town, POI name
- Contact name
- Geo-coordinates (⟶ page 549)

▶ Hide the keyboard with OK.

▶ Select the destination in the list.
The following menu shows the selected destination with the address information and a corresponding map section.
The menu enables the route to be calculated.

Searching for radio stations using station names or frequency entry

Multimedia system:

⟶ ⌂ ▶▶ Radio

▶ Select 🔍.

▶ Enter a station name or frequency.

▶ Select a station.

Luggage and loading

Notes on carrier systems

WARNING
Risk of accident due to exceeding the maximum roof load

The vehicle centre of gravity and the usual driving characteristics as well as the steering and braking characteristics alter.

If you exceed the maximum roof load, the driving characteristics, as well as steering and braking, will be greatly impaired.

- Never exceed the maximum roof load and adjust your driving style.

You can find information on the maximum roof load under "Technical data" in the printed Owner's Manual.

NOTE
Damage due to exceeding the maximum permissible roof load

If the weight of the roof luggage, including the roof luggage rack, exceeds the maximum permissible roof load, this can cause damage to the vehicle.

- Do not exceed the maximum permissible roof load.
- Arrange the supporting feet of the roof luggage rack at an even distance from each other.
- Install the basic carrier bars for rail in front of and behind the mid-section support.

NOTE
Damage to the threaded holes of the roof luggage rack due to an excessively high tightening torque

An excessively high tightening torque or an insufficient screw-in depth can cause damage to the thread of the roof luggage rack's threaded holes.

- Tighten the screws to a maximum torque of 10 Nm.
- Comply with the minimum screw penetration of four revolutions in the thread.
- To avoid damage to the vehicle, use roof and rear luggage racks that have been tested and approved for Mercedes-Benz.

NOTE
Vehicle damage due to failure to observe the maximum permissible clearance height

If the vehicle height exceeds the maximum permissible clearance height, the roof and other vehicle parts may be damaged.

- Please observe the indicated maximum clearance height.
- If the vehicle exceeds the permissible clearance height, do not drive in.
- Take the modified vehicle height in the case of roof superstructures or other carrier systems into account.

NOTE
The operating permit may be invalidated due to the illegal installation of trailer hitches

The installation – including retrofitting – of a non-folding or non-removable trailer hitch that even partially conceals the license plate or the lighting system is prohibited.

- Observe the applicable legal regulations for the installation of trailer hitches.

You can install a roof luggage rack on the roof and, for example, a rear bicycle rack on the tailgate.

Install the cover caps of the securing thread after removing the roof luggage rack.

If you have installed a rear bicycle rack on the tailgate, the additional weight will restrict the assistance offered by the pneumatic springs when you open the tailgate. You will then need more force to open the tailgate. At outside temperatures below freezing point, you should provide additional support for the tailgate after opening it in order to prevent it from lowering unintentionally.

Overview of lashing points

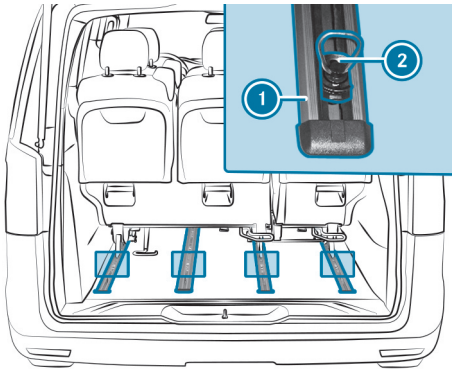

Example: variable lashing points in the guide rails

1. Guide rails
2. Tie-down eye

Do not attempt to modify or repair the lashing points, tie-down eyes or lashing materials. Read the information on qualified specialist workshops (→ page 117).

Fitting and removing tie-down eyes

WARNING
Risk of injury due to incorrectly installed tie-down eyes

If the tie-down eyes are not correctly installed, they can slip or tear out.

This may cause objects, luggage or the load to slip, tip over or be thrown about the vehicle interior, striking vehicle occupants.

- Make sure that the tie-down eyes are correctly installed and do not move.

- Observe the notes on the loading guidelines and on securing loads (→ page 619).

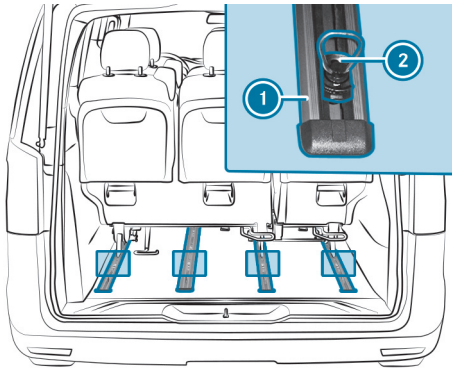

Example: guide rails

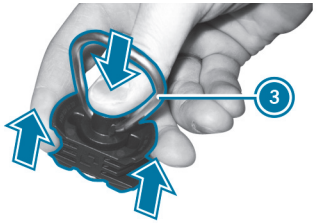

Tie-down eyes for guide rails

FITTING

- Turn metal retaining ring ③ so that it is parallel to longitudinal axis of tie-down eye ② as illustrated.

  The locking pin can only be pushed down sufficiently and allow the tie-down eye to be fitted, moved or removed, if the metal retaining ring is parallel to the longitudinal axis of the tie-down eye.

- Hold tie-down eye ② between your forefinger and middle finger as illustrated, and place your thumb through metal retaining ring ③ and on the central pressure point.

- Use your thumb to push the locking pin down as far as it will go.

- Push tie-down eye ② near the load using the notches on guide rail ①, and move it approximately 12 mm.

- Remove your thumb from the pressure point and slide tie-down eye ② until it engages.

- Turn metal retaining ring ③ so that it is perpendicular to the longitudinal axis of tie-down eye ②.

  The locking pin cannot be pushed down far if the metal retaining ring is perpendicular to the longitudinal axis of the tie-down eye. This prevents the tie-down eye from being released unintentionally, e.g. if the tie-down eye is stepped on

- Check that tie-down eye ② is seated correctly.

  The tie-down eye cannot be moved.

REMOVING

- Turn metal retaining ring ③ so that it is parallel to the longitudinal axis of tie-down eye ②.

- Grip tie-down eye ② as described above under fitting and use your thumb to push the locking pin down as far as it will go.

- Slide tie-down eye ② and pull it up and out through the notch of guide rail ①.

Removing/fitting a load protection net

WARNING
Risk of injury or death due to objects being poorly secured

The load protection net alone cannot restrain or secure heavy objects, luggage or heavy loads.

You could be hit by an unsecured load during sudden changes in direction, braking or in the event of an accident.

- Always stow objects in such a way that they cannot be thrown about the vehicle.

- Secure objects, luggage or loads against slipping or tipping over, e.g. by using lashing material, even when you are using the load protection net.

WARNING
Risk of injury due to sitting behind a load protection net

Vehicle occupants can be pressed against the load protection net. There is a risk of injury!

- Never allow vehicle occupants to sit behind the load protection net.

The load protection net partitions the load compartment. It protects vehicle occupants from light objects and/or luggage slipping or falling over.

You can install the load protection net at an angle behind the front seats or behind the 2nd seat row.

- Observe the notes on securing loads (→ page 624).

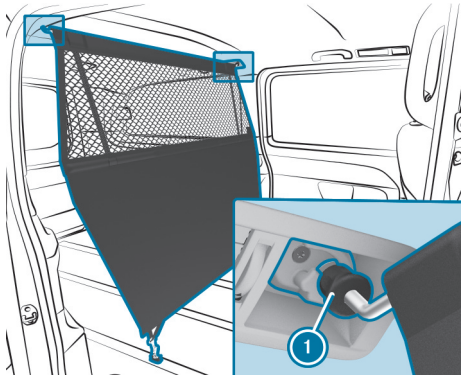

Upper retainer

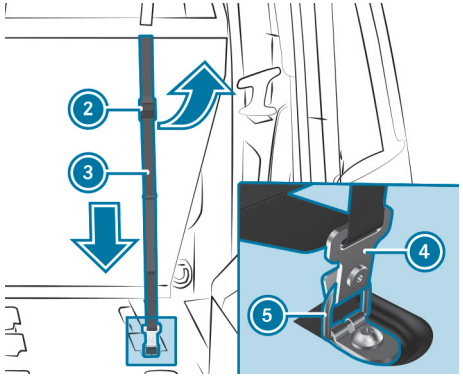

Floor anchorage (example: secured tie-down eye)

INSTALLING

- Remove the luggage compartment partition if necessary (→ page 50).
- Clip the load protection net into upper retainers 1 in such a way that tensioning straps 3 face the rear of the vehicle.
- Fit tie-down eyes 5 into the guide rails close to the rear seat legs (→ page 47). Position them at least 5 cm from the seat legs to allow subsequent movement of the rear seat.
- Check that tie-down eyes 5 are seated correctly.
  The tie-down eyes 5 should not move.
- Clip the hooks 4 on the tensioning straps 3 into the tie-down eyes 5.
- Fold the tensioning element 2 up.
- Pull the loose end of the tensioning straps 3 down in the direction of the arrow until tensioning straps 3 are tight.

- Fold tensioning element ② down to achieve the final tension on the straps.
- If necessary, fit the luggage compartment partition (→ page 50).
- After travelling a short distance, check that the load protection net is taut, and retighten it if necessary.

REMOVING

- Remove the luggage compartment partition if necessary (→ page 50).
- Fold the tensioning element ② up.
  Tensioning straps ③ are slack.
- Unclip hooks ④ of tensioning straps ③ from tie-down eyes ⑤ at the bottom.
- Unclip the load protection net from upper retainers ①.
- If necessary, remove tie-down eyes ⑤ (→ page 47).
- If necessary, fit the luggage compartment partition (→ page 50).
- Roll up the load protection net and fasten it, still rolled up, using the Velcro fasteners.

ADJUSTING THE FRONT SEAT WITH THE LOAD PROTECTION NET FITTED

- Fold tensioning element ② on straps ③ upwards.
  The load protection net slackens.
- Correctly adjust the front seat.
- Re-tension the load protection net.

Using the luggage compartment partition

WARNING
Risk of injury from unsecured objects in the vehicle

When objects are unsecured or inadequately secured, they can slip, tip over or be thrown about, striking vehicle occupants.

THIS ALSO APPLIES TO:

- luggage or loads
- seats which have been removed and are being transported in the vehicle in an exceptional case

There is a risk of injury, particularly in the event of braking manoeuvres or abrupt changes in direction.

- Always stow objects in such a way that they cannot be tossed about.
- Before travelling, secure objects, luggage or load to prevent them slipping or tipping over.
- When a seat is removed, keep it preferably outside the vehicle.

WARNING
Risk of accident or injury when the luggage compartment partition is not locked in position

The luggage compartment partition can come loose when driving and be thrown about the vehicle interior.

- Fit the luggage compartment partition as described.
- After fitting the luggage compartment partition, always make sure that the luggage compartment partition is locked and folded down.

NOTE
Damage to the luggage compartment partition due to heavy loads

If the luggage compartment partition is loaded with too much weight, the fixture points and the luggage compartment partition may be damaged.

- Do not load more than 50 kg on the luggage compartment partition.

The luggage compartment partition is only secured correctly when both levers are locked.

- Comply with the loading guidelines (→ page 619).

OPENING THE STOWAGE COMPARTMENTS

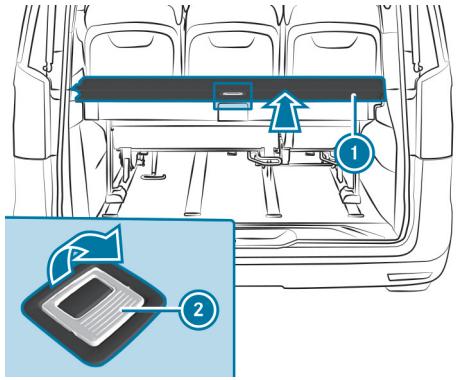

- Pull handle (2) in the direction of the arrow.
  Cover (1) folds upwards in the middle.
- Slide cover (1) to the stop in the direction of the arrow.

CLOSING THE STOWAGE COMPARTMENTS

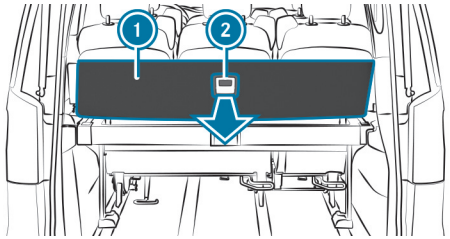

- Pull cover (1) on handle (2) in the direction of the arrow.
- Push cover (1) down in the middle until it is fully closed.

FOLDING UP THE LUGGAGE COMPARTMENT PARTITION TO AN ANGLE OF 70-°

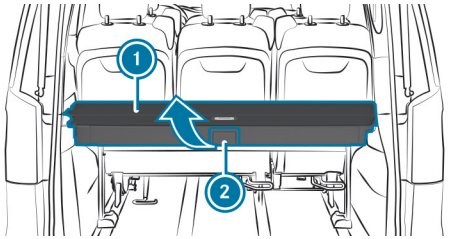

- Pull handle ② in the direction of the arrow.
  Luggage compartment partition ① is released.
- Fold up luggage compartment partition ①.

Make sure that luggage compartment partition ① is always folded down when the vehicle is moving.

FOLDING DOWN THE LUGGAGE COMPARTMENT PARTITION

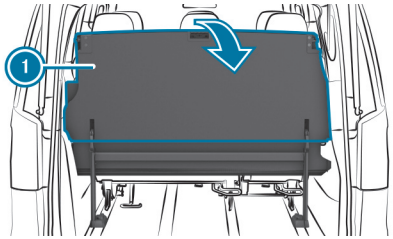

- Fold down luggage compartment partition ① until it engages.
  Luggage compartment partition ① is locked.

REMOVING THE LUGGAGE COMPARTMENT PARTITION

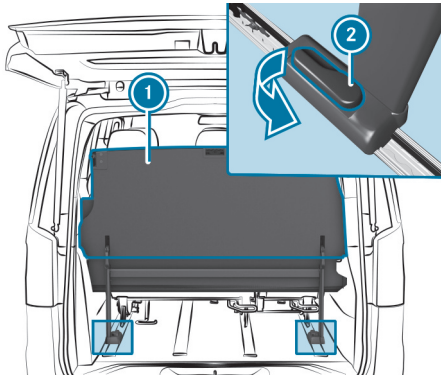

- Fold up luggage compartment partition ①.
- Swing levers ② inwards.
  Luggage compartment partition ① is released.
- Remove luggage compartment partition ①.

FITTING THE LUGGAGE COMPARTMENT PARTITION

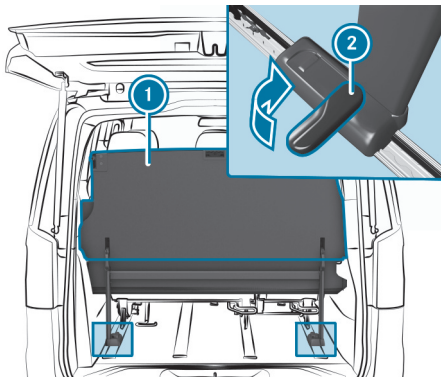

If possible, fit luggage compartment partition ① with the help of another person.

- Place luggage compartment partition (1) into the vehicle at an angle.
- Rotate luggage compartment partition (1) in the vehicle and insert it into the guide rails.

The guide rails have triangular markings at the place to be inserted which must be at the same height as levers (2).

- Swing levers (2) outwards.
  Luggage compartment partition (1) is locked.
- Fold luggage compartment partition (1) down.

Ice and snow

Notes on regularly inspecting wheels and tyres

WARNING
Risk of injury due to damaged tyres

Damaged tyres can cause tyre pressure loss.

► Check the tyres regularly for signs of damage and replace any damaged tyres immediately.

Check the wheels and tyres of your vehicle for damage regularly, i.e. at least every two weeks, as well as after driving off-road or on rough roads. Damaged wheels can lead to a loss of tyre pressure.

LOOK OUT FOR THE FOLLOWING TYPES OF DAMAGE, FOREXAMPLE:

- cuts in the tyres
- punctures in the tyres
- tears in the tyres
- bulges on tyres
- deformation or severe corrosion on wheels

WARNING
Risk of aquaplaning due to insufficient tyre tread

Insufficient tyre tread will result in reduced tyre grip. There is a risk of an accident.

On a wet road surface the risk of aquaplaning is increased, in particular where speed is not adapted to suit the conditions.

► Check the tread depth and the condition of the tyre contact surface across the entire width of all tyres on a regular basis.

MINIMUM TREAD DEPTH FOR

- Summer tyres: 3 mm
- M+S tyres: 4 mm

► For safety reasons, replace the tyres before the legally-prescribed limit for the minimum tread depth is reached.

► Replace the tyres immediately if the legally-prescribed limit for the minimum tread depth is reached.

CONDUCT THE FOLLOWING CHECKS REGULARLY ON ALL WHEELS, AT LEAST ONCE A MONTH OR AS REQUIRED, E.G.BEFORE A LONG JOURNEY OR WHEN DRIVING OFF-ROAD:

- check the tyre pressure (→ page 693)

- check the valve caps

  Valves must be protected from moisture and dirt with valve caps specifically approved by Mercedes-Benz for your vehicle.
- Visually inspect the tread depth and the tyre tread across the whole tyre width

  The minimum tyre tread depth for summer tyres is 3 mm and for winter tyres 4 mm.

Setting the speed limitation for winter tyres

Multimedia system:

Settings ▶▶ Vehicle ▶▶ Winter tyre limit

▶ Select a speed or deactivate the function.

Notes on snow chains

Vehicles with rear wheel drive or all-wheel drive

WARNING
Risk of accident due to incorrectly fitted snow chains

If you have fitted snow chains to the front wheels, they may drag against the vehicle body or chassis components.

▶ Never fit snow chains to the front wheels.

▶ Only fit snow chains on the rear wheels in pairs.

NOTE
Damage to the body or suspension parts due to mounted snow chains

If you fit snow chains to the front wheels of four-wheel drive 4x4 vehicles, you may damage body or suspension parts.

▶ For all-wheel drive 4x4 vehicles, fit snow chains on the rear wheels only.

WARNING
Risk of accident due to snow chains breaking

If you drive too fast with snow chains, they can break, injure other persons, and damage the vehicle.

▶ Observe the maximum permissible speed for operation with snow chains.

NOTE
Damage to the wheel trim from fitted snow chains

If snow chains are fitted to steel wheels, the wheel trims can be damaged.

▶ Remove the wheel trims of steel wheels before fitting snow chains.

OBSERVE THE FOLLOWING NOTES WHEN USING SNOW CHAINS:

- Snow chains are only permissible for certain wheel/tyre combinations. You can obtain information on this matter at a qualified specialist workshop.
- For safety reasons, only use snow chains that have been specifically approved for your vehicle by Mercedes-Benz, or snow chains with the same quality standard.
- The snow chains must be retightened after driving approximately 1 km. This is the only way to ensure the snow chains are optimally fitted with clearance to adjacent components.
- Use snow chains only when the road surface is completely snow-covered. Remove the snow chains as soon as possible when you come to a road that is not snow-covered.
- Local regulations may restrict the use of snow chains. Observe the applicable regulations before fitting snow chains.
- If snow chains are fitted, the maximum permissible speed is 50 km/h.
- **Vehicles with Active Parking Assist:** do not use Active Parking Assist when snow chains are fitted.

ⓘ You can deactivate ESP® to start off (⟶ page 396). This allows the wheels to spin, achieving an increased propulsive force.

Notes on windscreen washer fluid

Observe the notes on operating fluids (⟶ page 744).

WARNING
- Risk of fire and injury due to windscreen washer concentrate

Windscreen washer concentrate is highly flammable. It could ignite if it comes into contact with hot engine component parts or the exhaust system.

► Make sure that no windscreen washer concentrate spills out next to the filler opening.

NOTE
Damage to the exterior lighting due to unsuitable windscreen washer fluid

Unsuitable windscreen washer fluids may damage the plastic surface of the exterior lighting.

► Only use windscreen washer fluids which are also suitable for use on plastic surfaces, e.g. MB SummerFit or MB WinterFit.

NOTE
Blocked spray nozzles caused by mixing windscreen washer fluids

► Do not mix MB SummerFit and MB WinterFit with other windscreen washer fluids.

Do not use distilled or de-ionised water. Otherwise, the fill level sensor may be actuated erroneously.

RECOMMENDED WINDSCREEN WASHER FLUID:

- above freezing point: e.g. MB SummerFit

- below freezing point: e.g. MB WinterFit

For the correct mixing ratio, refer to the information on the anti-freeze container.

Mix the washer fluid with windscreen washer fluid all year round.

Topping up the windscreen washer system

WARNING
Risk of burns when opening the bonnet

IF YOU OPEN THE BONNET IN THE EVENT OF AN OVERHEATED ENGINE OR FIRE IN THE ENGINE COMPARTMENT, THE FOLLOWING SITUATIONS MAY OCCUR:

- You may come into contact with hot gases.
- You may come into contact with other escaping hot operating fluids.

► Before opening the bonnet, allow the engine to cool down.

► In the event of a fire in the engine compartment, keep the bonnet closed and call the fire service.

WARNING
Risk of injury due to moving parts

Components in the engine compartment can continue to run or start unexpectedly even when the ignition is switched off.

Observe the following before performing tasks in the engine compartment:

► Switch off the ignition.

► Never touch the danger zone surrounding moving components, e.g. the rotation area of the fan.

► Remove jewellery and watches.

► Keep items of clothing and hair away from moving parts.

WARNING
Risk of fire and injury from windscreen washer concentrate

Windscreen washer concentrate is highly flammable.

► Avoid fire, naked flames, smoking and the creation of sparks when using windscreen washer concentrate.

WARNING
Risk of burns from hot component parts in the engine compartment

Certain component parts in the engine compartment can be very hot, e.g. the engine, the cooler and parts of the exhaust system.

- Allow the engine to cool down and only touch component parts described in the following.

NOTE
Damage to the exterior lighting due to unsuitable windscreen washer fluid

Unsuitable windscreen washer fluids may damage the plastic surface of the exterior lighting.

- Only use windscreen washer fluids that are also suitable for use on plastic surfaces, e.g. MB SummerFit or MB WinterFit.

TOPPING UP THE WASHER FLUID

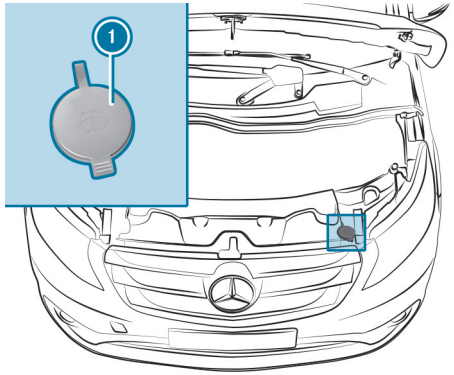

Washer fluid reservoir (example)

- Observe the notes on windscreen washer fluid (→ page 56).
- Pull cap (1) upwards by the tab.
- Top up the washer fluid.
- Push cap (1) onto the filler opening until it audibly engages.

Replacing the windscreen wiper blades

WARNING
Risk of becoming trapped if the windscreen wipers are switched on while wiper blades are being replaced

If the windscreen wipers begin to move while you are changing the wiper blades, you can be trapped by the wiper arm.

- Always switch off the windscreen wipers and vehicle before changing the wiper blades.

NOTE
Damage to the windscreen or rear window when you replace the wiper blade

If a wiper arm is folded back onto the windscreen or rear window and no wiper blade is fitted, the window may be damaged by the force of the impact.

- Never fold a wiper arm back onto the windscreen or rear window without a wiper blade fitted. Hold the wiper arm firmly when a wiper blade is being replaced.

NOTE
Damage to bonnet or windscreen wipers when opening the bonnet

If the windscreen wipers have been folded back from the windscreen when the bonnet is opened, the windscreen wipers or the bonnet may be damaged.

- Ensure that the windscreen wipers have not been folded back from the windscreen.

REMOVING THE WIPER BLADES

- Fold the wiper arms away from the windscreen.

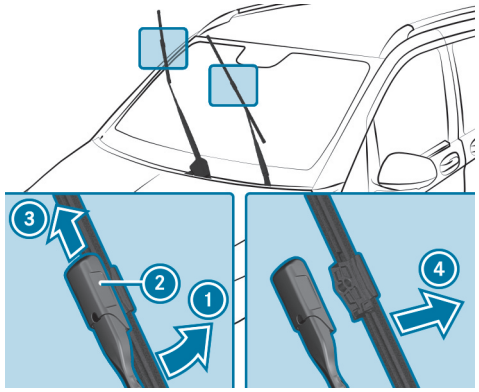

- Hold the wiper arm with one hand. With the other hand, turn the wiper blade away from the wiper arm in the direction indicated by the arrow 1 as far as it will go.
- Slide the catch 2 away from the wiper arm in the direction indicated by the arrow 3 until it engages in the removal position.

- Remove the wiper blade from the wiper arm in the direction indicated by the arrow 4.

FITTING THE WIPER BLADES

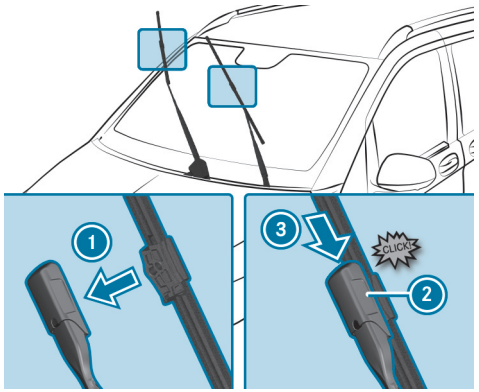

- Insert the new wiper blade into the wiper arm in the direction indicated by the arrow 1.
- Slide the catch 2 in the direction indicated by the arrow 3 until it engages in the locking position.
- Ensure that the wiper blade is seated correctly.
- Fold the wiper arms back onto the windscreen.

MAINTENANCE DISPLAY

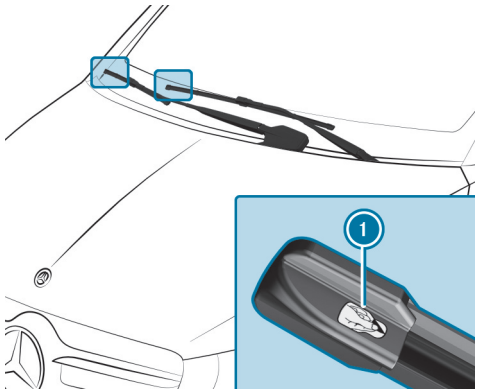

- Remove the protective film 1 from the maintenance displays on the tips of the newly fitted wiper blades.

If the colour of the maintenance display changes from black to yellow, the wiper blades should be replaced.

> ⓘ The time it takes for the colour to change varies depending on the usage conditions.

Switching the hot-water auxiliary heater on/off via the operating unit

DANGER
Risk of fatal injury due to poisonous exhaust gases

If the tailpipe is blocked or sufficient ventilation is not possible, poisonous exhaust gases such as carbon monoxide may enter the vehicle. This is the case in enclosed spaces or if the vehicle gets stuck in snow, for example.

- ► Always switch the stationary heater off in enclosed spaces without an air extraction system, e.g. in garages.
- ► Keep the tailpipe and the area around the vehicle free from snow when the engine or the stationary heater is running.
- ► Open a window on the side of the vehicle facing away from the wind to ensure an adequate supply of fresh air.

WARNING
Risk of fire due to hot stationary heater components and exhaust gases

Flammable materials such as leaves, grass or twigs may ignite.

- ► When the stationary heater is switched on, make sure that:
  - hot vehicle parts do not come into contact with flammable materials.
  - the exhaust gas can flow out of the stationary heater exhaust pipe unhindered.
  - the exhaust gas does not come into contact with flammable materials.

NOTE
Battery discharge caused by stationary heater or stationary ventilation operation

Operating the stationary heater or stationary ventilation drains the battery.

- ► After heating or ventilating the vehicle twice, drive for a longer period of time.

Requirements

- The fuel tank is filled above the reserve level.

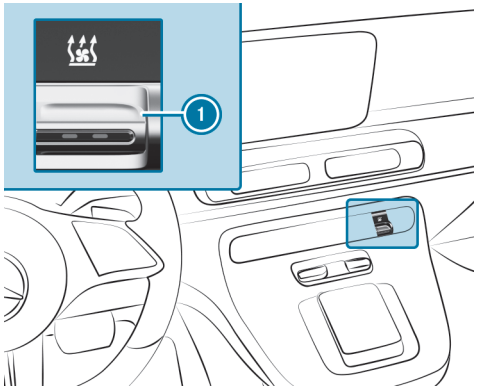

- Set the desired temperature (→ page 325).

  If the temperature is not altered before the auxiliary heating is switched on, the last temperature setting will be adopted.

- **To switch on:** press button 1.

  The red or blue indicator lamp on button 1 will light up.

THE COLOURS OF THE INDICATOR LAMP HAVE THE FOLLOWING MEANINGS:

- **Blue:** the stationary ventilation is switched on.
- **Red:** the stationary heater is switched on.
- **Yellow:** a departure time is preselected.

- **To switch off:** press button 1 again.

The stationary heater/ventilation will switch off automatically after a maximum of 50 minutes.

Switching the switch clock on (auxiliary warm-air heater)

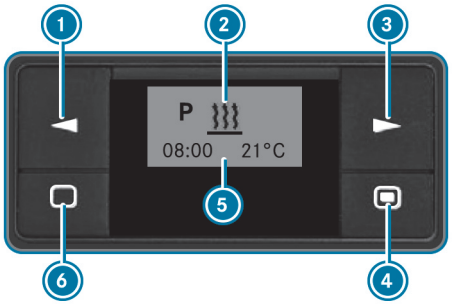

- Press button 6 .

ⓘ The switch clock will switch to standby mode after ten seconds. The display will go off.

Help in the event of a breakdown

Switching the hazard warning light system on/off

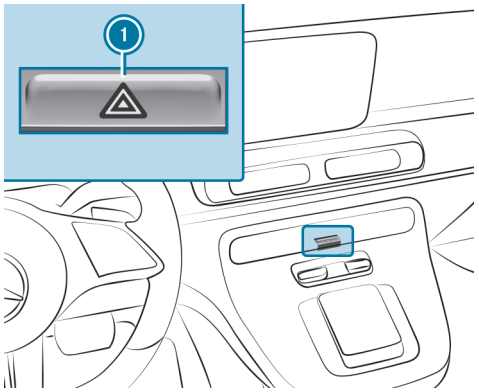

► Press button ①.

THE HAZARD WARNING LIGHT SYSTEM WILL SWITCH ON AUTOMATICALLY IN THE FOLLOWING SITUATIONS:

- The airbag is deployed
- The vehicle is braked heavily from a speed of more than 70 km/h to a standstill.

When pulling away again, the hazard warning lights switch off automatically at approx. 10 km/h. You can also switch off the hazard warning light system using button ①.

When the turn signal indicator is activated, the hazard warning lights will be interrupted.

Removing the fire extinguisher

WARNING
Risk of accident due to an incorrectly secured fire extinguisher in the driver's footwell

A fire extinguisher may impede pedal travel or block a depressed pedal.

This jeopardises the operating and road safety of the vehicle.

The fire extinguisher can be flung around and injure the driver or other vehicle occupants.

► Always store and secure the fire extinguisher in the bracket.

► Do not remove the fire extinguisher while driving.

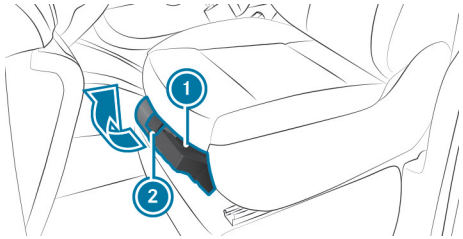

- Open the clasp on the holder ②.
- Remove the fire extinguisher ① from its holder.

For vehicles with a swivelling front seat, the holder containing the fire extinguisher is located at the side of the seat box.

Please read the instructions on the fire extinguisher carefully and familiarise yourself its operation. Have the fire extinguisher refilled after each use and checked every one or two years. The fire extinguisher may otherwise fail in an emergency.

Observe the legal requirements of the country in which you are currently driving.

Removing the safety vest

The safety vest is located in the door stowage compartment in the driver's door.

- Remove the safety vest out of the door stowage compartment.

ⓘ Safety vests can also be stored in the door stowage compartment of the front passenger door. Observe the legal requirements of the individual countries.

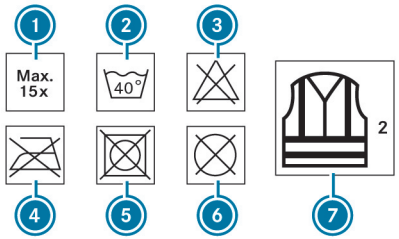

① Maximum number of washes
② Maximum wash temperature
③ Do not bleach
④ Do not iron
⑤ Do not tumble dry
⑥ Do not dry-clean
⑦ Class 2 safety vest

The requirements defined by the legal standard are only fulfilled if the safety vest is the correct size and is fully closed.

REPLACE THE SAFETY VEST IN THE FOLLOWING CASES:

- The reflective strips are damaged or dirty
- The maximum permissible number of washes is exceeded
- The fluorescence property decreases, e.g. due to permanent exposure to sunlight.

DISPOSE OF THE SAFETY VEST IN AN ENVIRONMENTALLY FRIENDLY WAY:

- Please contact your local waste disposal company.

Removing the warning triangle

The warning triangle is located in the storage compartment in the driver's door.

- Take the warning triangle out of the storage compartment.

Removing the first-aid kit (soft sided)

The first-aid kit (soft sided) is located in the storage compartment in the front passenger door.

- Remove the first-aid kit (soft sided) from the storage compartment.

QR codes for rescue card

The QR code stickers are affixed to the B-pillars on the driver's side and front passenger side. In the event of an accident, emergency services can use the QR code to quickly determine the corresponding rescue card for your vehicle. The current rescue card contains the most important information pertaining to your vehicle (e.g.routing of the electric lines) in a compact format.

Additional information can be obtained at: https://rk.mb-qr.com/de/

Starting assistance and charging the 12-V-battery

PREPARE STARTING ASSISTANCE/CHARGING PROCESS

- Apply the parking brake.
- Shift the transmission to position P .
- Switch off the vehicle and all electrical consumers.
- Open the bonnet(⟶ page 639).

CONNECTING AND DISCONNECTING THE JUMP LEAD

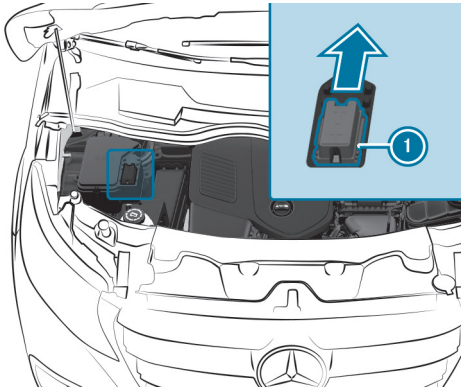

Example: jump-start connection point

- Slide the contact protection (1) of the jump-start connection point in the direction of the arrow.
  Positive terminal (5) of the jump-start connection point is visible.

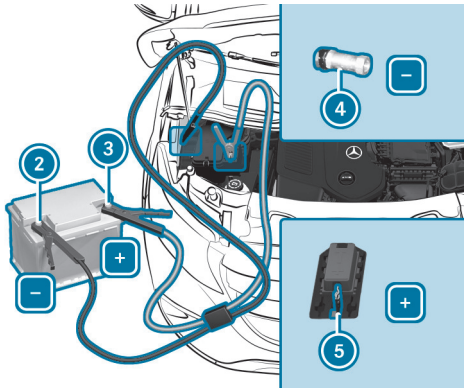

Terminal connection diagram

- Remove the cover from positive terminal ③ of the donor battery.
- Connect the positive terminal clamp of the jump lead to positive terminal ③ of the donor battery, and then to positive terminal ⑤ of the jump-start connection point.
- Connect the negative terminal clamp of the jump lead to negative terminal ② of the donor battery, and then to earth contact ④ of your own vehicle.
- Start the engine of the donor vehicle and run it at idle speed.
- Start the vehicle and let the engine run for a while.
- Before disconnecting the jump leads, switch on an electrical consumer in your own vehicle, e.g. the rear window heater or the lighting.
- Disconnect the negative terminal clamp of the jump lead from earth contact ④ and then from negative terminal ② of the donor battery.
- Disconnect the positive terminal clamp of the jump lead from positive terminal ⑤ on the jump-start connection point, and then from positive terminal ③ of the donor battery.

  Contact protection cover ① is automatically returned forwards to its original position by the spring force and the jump-start connection point is sealed.
- Position the cover on positive terminal ③ of the donor battery.
- Have the battery checked at a qualified specialist workshop.

CHARGING THE 12 -V- BATTERY

NOTE
Damage to the electronics due to unapproved chargers

If you charge an installed battery with a charger not approved for Mercedes-Benz, the on-board electronics can be damaged.

- Only use a charger approved for Mercedes-Benz which permits charging in the installed condition.
- Only charge the battery via the jump-start connection point.

A battery charger specially adapted for Mercedes-Benz vehicles and tested and approved for Mercedes-Benz is available as an accessory.

You can obtain further information from a Mercedes-Benz service centre. Read the Owner's Manual for your charger before charging the battery.

Recharge the battery more frequently if you use the vehicle mainly for short trips and/or drive at low outside temperatures.

- Connect the battery charger to the positive terminal and earth contact in the same order as when connecting the donor battery in the starting assistance procedure.

ⓘ If a battery is not installed and not in use, you should charge it every three months. This helps to counteract self-discharge and prevent damage to the battery.

Notes on electrical fuses

WARNING
Risk of accident and injury due to overloaded lines

If you manipulate or bridge a faulty fuse or if you replace it with a fuse with a higher amperage, the electric line could be overloaded.

This could result in a fire.

- Always replace faulty fuses with specified new fuses containing the correct amperage.

If the new fuse which has been inserted also blows, have the cause traced and rectified at a qualified specialist workshop.

The fuse allocation chart and the information on the fuses can be found in the "Fuse allocation chart" Supplement.

Notes on flat tyres

WARNING
Risk of accident due to a flat tyre

A flat tyre strongly impairs the vehicle's driving characteristics, as well as its steering and braking characteristics.

- Do not drive with a flat tyre.
- Replace the flat tyre with the spare wheel. Alternatively, consult a qualified specialist workshop.

You will find a sticker with the Mercedes-Benz Service24h telephone number on the B-pillar on the driver's side, for example.

IN THE EVENT OF A FLAT TYRE THE FOLLOWING POSSIBLE SOLUTIONS ARE AVAILABLE, DEPENDING ON YOUR VEHICLE'S EQUIPMENT:

- **Vehicles with Mercedes-Benz Support:** you can make a call for breakdown assistance via the overhead control panel in the case of a breakdown (→ page 498).
- **Vehicles with an emergency spare wheel or spare wheel:** change the wheel (→ page 700).

Towing the vehicle with both axles on the ground

- Observe the notes on permissible towing methods (→ page 676).
- Make sure that the battery is connected and charged.

A DISCHARGED BATTERY HAS THE FOLLOWING CONSEQUENCES:

- The vehicle cannot be switched on.
- It is not possible to release or apply the parking brake.
- It is not possible to shift the transmission to position N or P.

IN THE FOLLOWING CASES, ONLY TRANSPORT OF THE VEHICLE IS PERMISSIBLE:

- The transmission cannot be shifted to position N.
- If the driver display is down.

A towing vehicle with lifting equipment is required for vehicle transport (→ page 679).

NOTE
Damage due to towing away at excessively high speeds or over long distances

The drivetrain could be damaged when towing at excessively high speeds or over long distances.

- A towing speed of 50 km/h must not be exceeded.
- A towing distance of 50 km must not be exceeded.

WARNING
Risk of accident when towing a vehicle which is too heavy

IF THE VEHICLE TO BE TOW-STARTED OR TOWED AWAY IS HEAVIER THAN THE PERMISSIBLE GROSS MASS OF YOUR VEHICLE, THE FOLLOWING SITUATIONS CAN OCCUR:

- the towing eye may become detached.
- the vehicle/trailer combination may swerve or overturn.

- Before tow-starting or towing away, check if the vehicle to be tow-started or towed away exceeds the permissible gross mass.

- Information on the vehicle's gross mass vehicle rating can be found on the vehicle identification plate (→ page 743).
- Fit the towing eye (→ page 680).
- Secure the towing device.

NOTE
Damage due to incorrect connection of the tow bar or improper use of the towing device

- Only connect the tow rope or tow bar to the towing eyes or the trailer tow hitch.
- Do not use the towing eyes to recover a vehicle.

- Switch on the vehicle.
- Deactivate automatic locking (→ page 185).
- Do not activate the HOLD function.
- Deactivate Active Brake Assist (→ page 400).
- Shift the transmission to position N (→ page 364).
- Do not open the driver's door or front passenger's door; the automatic transmission may otherwise automatically shift to position P.
- Release the parking brake (→ page 387).

WARNING
Risk of accident due to limited safety-related functions during the towing process

SAFETY-RELATED FUNCTIONS ARE LIMITED OR NO LONGER AVAILABLE IN THE FOLLOWING SITUATIONS:

- the vehicle is switched off.
- the brake system or power steering system is malfunctioning.
- the energy supply or the on-board electrical system is malfunctioning.

When your vehicle is towed away, significantly more effort may be required to steer and brake than is normally required.

► Use a tow bar.

► Make sure that the steering wheel can move freely before towing the vehicle away.

NOTE
Damage due to excessive tractive power

If you pull away sharply, the tractive power may be too high and the vehicles could be damaged.

► Pull away slowly and smoothly.

Expert tips

Additional button functions

CONVENIENCE OPENING OR CLOSING WITH THE RECIRCULATION BUTTON

> ⚠ **WARNING**
> Risk of entrapment due to not paying attention during convenience closing
>
> When the convenience closing feature is operating, parts of the body could become trapped in the closing area of the side window and the sliding sunroof.
>
> ► When the convenience closing feature is operating, monitor the entire closing process and make sure that no body parts are in the closing area.

> ⚠ **WARNING**
> Risk of entrapment when opening a side window
>
> When opening a side window, parts of the body could be drawn in or become trapped between the side window and window frame.
>
> ► When opening, make sure that nobody is touching the side window.
>
> ► Release the button immediately if somebody becomes trapped.

► **Convenience closing:** press the button until the side windows close automatically.

The original position of the side windows is stored. Air-recirculation mode is activated.

► **To interrupt convenience closing:** release the button.

► **To continue convenience closing:** press and hold the button again.

► **Convenience opening:** press the button until the side windows open automatically.

The side windows open automatically until they have reached their previously saved position. Air-recirculation mode will be deactivated.

► **To interrupt convenience opening:** release the button.

- **To continue convenience opening:** press the button again and hold pressed.

SWITCHING TRAFFIC ANNOUNCEMENTS ON/OFF
Multimedia system:
Radio General
- Activate or deactivate Traffic announcements.

Driving tips

VEHICLE CONDITIONS FOR AUTOMATIC ENGINE STOP OR START

CONDITIONS FOR AUTOMATIC ENGINE STOP:

- The ECO start/stop function is switched on.
- The brake system does not require a running engine.
- The outside temperature is within the range that is suitable for the system.
- The atmospheric air pressure is within the range that is suitable for the system.
- The engine is at normal operating temperature.
- Engine diagnostics are not active.
- The engine speed is within the range that is suitable for the system.
- The transmission oil temperature is within the range that is suitable for the system.
- The temperature in the vehicle interior is within the set range.
- The fuel tank is sufficiently filled.
- The system detects that there is no moisture on the windscreen when the air conditioning system is switched on.
- The state of charge and the voltage of the battery are sufficient.
- The battery temperature is within the range that is suitable for the system.
- The system does not detect a steep gradient.
- The bonnet is closed.

CONDITIONS FOR AUTOMATIC ENGINE START:

- The vehicle is moving.
- The brake system requires a running engine.
- The outside temperature has exceeded the range that is suitable for the system.
- The atmospheric air pressure has exceeded the range that is suitable for the system.
- Engine diagnostics require a running engine.
- The transmission oil temperature has exceeded the range that is suitable for the system.
- The temperature in the vehicle interior deviates from the set range.
- The system detects moisture on the windscreen when the air conditioning system is switched on.
- The state of charge of the battery is too low.
- The battery temperature has exceeded the range that is suitable for the system.

Good to know

REDUCING THE ENERGY CONSUMPTION OF THE KEY

DEACTIVATE KEY FUNCTION
If you do not use the vehicle or a key for an extended period of time, you can also deactivate the function of the key to reduce the energy consumption of the key.

- Press and hold the key button 🔒.
- With the key button 🔒 pressed, immediately press key button 🔓 twice in quick succession.
  The indicator lamp of the key lights up once briefly and then again for a longer period.

ACTIVATE KEY FUNCTION

- Press any button on the key.

> ⓘ When the key is located in the storage compartment for starting in emergency operation mode, the key function is activated automatically (⟶ page 351).

OVERVIEW OF THE MERCEDES-BENZ EMERGENCY CALL SYSTEM

The Mercedes-Benz emergency call system can help to decisively reduce the time between an accident and the arrival of emergency services at the site of the accident. It helps locate an accident site in places that are difficult to access.

The emergency call can be triggered automatically (⟶ page 664).

You also have the option of triggering the emergency call manually (⟶ page 665). Only make emergency calls if you or others are in need of rescue. Do not make an emergency call in the event of a breakdown or a similar situation.

MESSAGE IN THE MEDIA DISPLAY:

SOS NOT READY: the vehicle is not switched on or the emergency call system is malfunctioning.

This does not necessarily indicate a total failure of the emergency call system. Emergency calls can still be transmitted.

The display refers only to the vehicle and does not take account of the availability of mobile phone networks and the Mercedes-Benz emergency call centre.

The functional readiness of the emergency call system on the vehicle can be seen when the SOS NOT READY display disappears once the vehicle is switched on.

During an active emergency call, SOS appears in the display.

You can find more information on the regional availability of the Mercedes-Benz emergency call system at: https://www.mercedes-benz-mobile.com/extra/ecall/

> ⓘ If there is a malfunction of the emergency call system, the speakers, microphone, airbag or the SOS button, for example, are faulty.
>
> **YOU CAN RECOGNISE A FAULT IN THE EMERGENCY CALL SYSTEM BY THE FOLLOWING DISPLAYS:**
>
> - The red SOS NOT READY message appears in the display of the instrument cluster or in the media display.
> - The SOS button lights up red continuously.

At a glance

This interactive PDF works like a website – tap or click a button to jump straight to where you want to go.
You can return here at any time via the navigation bar at the top left.

Cockpit
Indicator and warning lamps
Centre console
Overhead control panel
Door operating unit
Emergencies and breakdowns

Cockpit

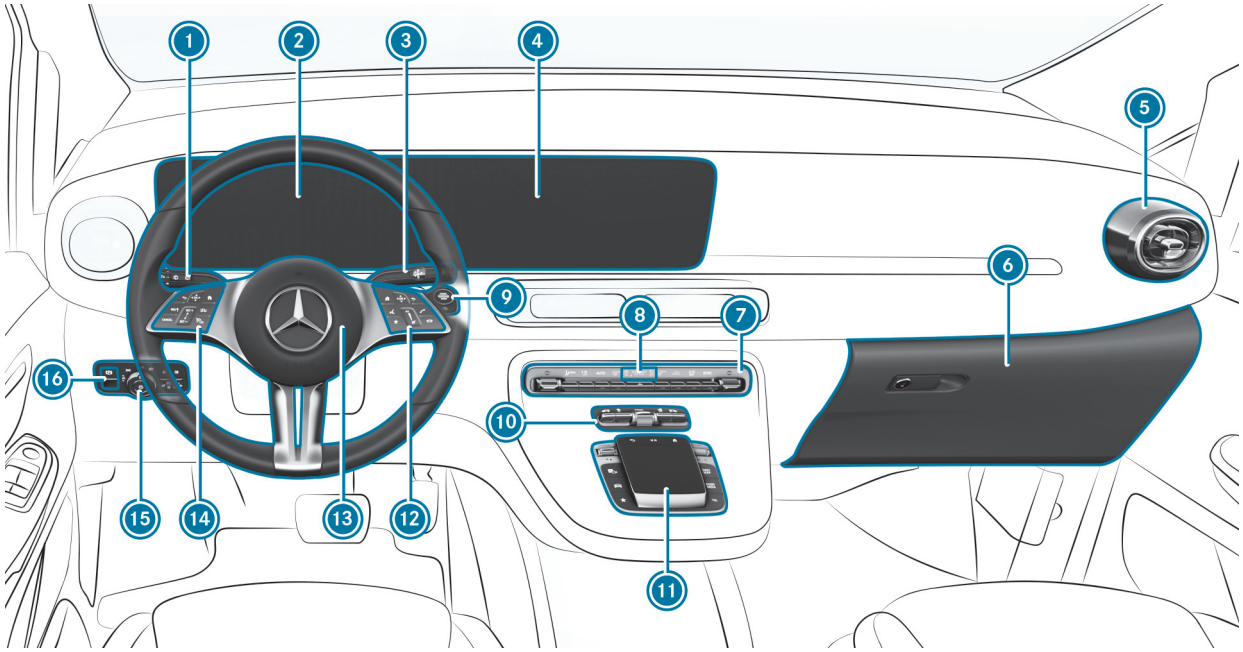

1 Combination switch
2 Driver display
3 DIRECT SELECT lever (automatic transmission)
4 Media display
5 Air vents
6 Glove compartment
7 Air conditioning control panel
8 PASSENGER AIR BAG indicator lamps
9 Start/stop button
10 Switch panel
11 Touchpad
12 Control panel for multimedia system
13 Steering wheel
Adjusts the steering wheel
Steering wheel gearshift paddles (automatic transmission)
14 Control panel:
Driver display
Cruise control or variable limiter
Active Distance Assist DISTRONIC
15 Light switch
16 Parking brake

Indicator and warning lamps

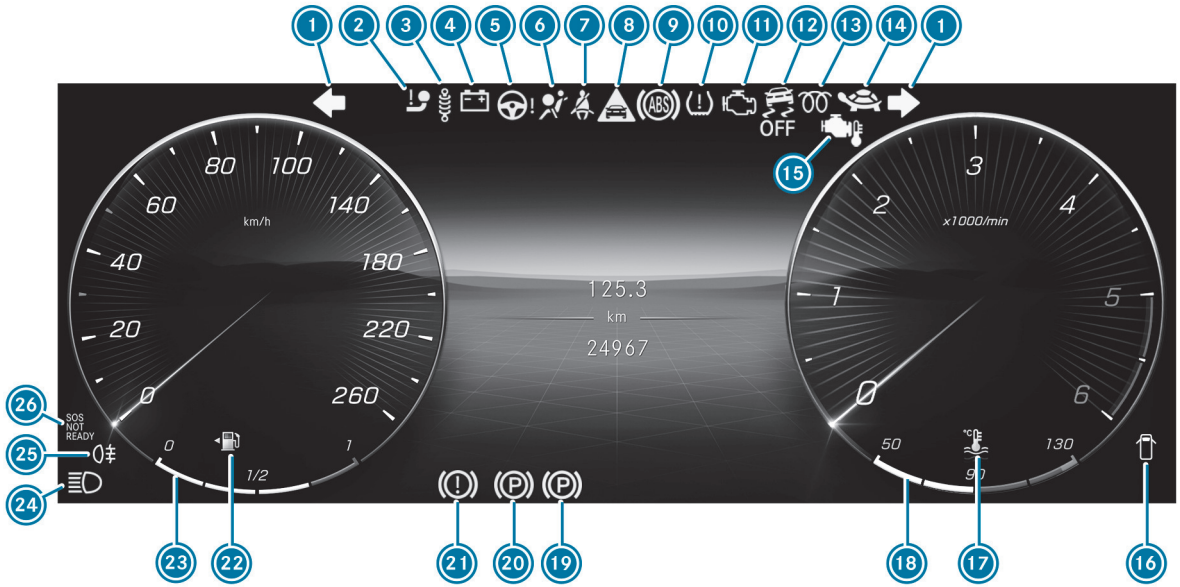

Vehicles with diesel engine (example)

1. Turn signal light
2. Trailer hitch
3. Suspension (red)
   Suspension (yellow)
4. Electrical fault
5. Power steering (red)
6. Restraint system
7. Seat belt
8. Distance warning
9. ABS
10. Tyre pressure monitoring system
11. Engine diagnostics
12. ESP® OFF
    ESP®
13. Diesel engine: preglow
14. Reduced power
15. Engine operating temperature
16. Door open
17. Coolant temperature
18. Coolant temperature display
19. Electric parking brake (yellow)
20. Electric parking brake (red)
21. Brakes (red)
22. Reserve fuel with fuel filler flap location indicator
23. Fuel level
24. Side lights
    Low beam
    High beam
25. Rear fog light
26. Mercedes-Benz emergency call system

For more information on indicator lamps, see the "Overview of status indicators on the driver display" section

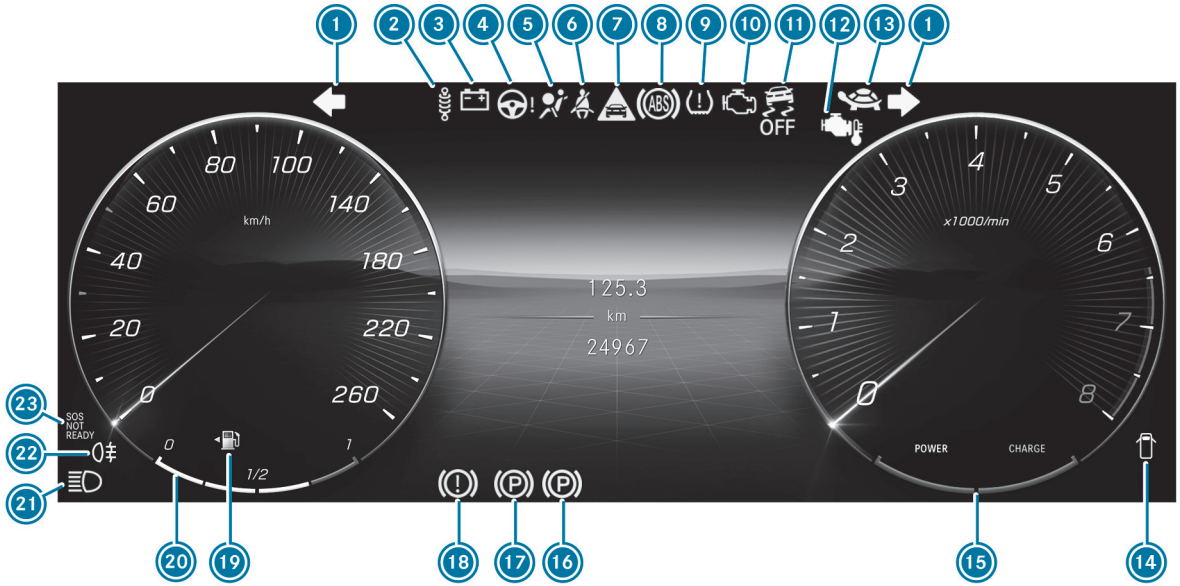

Vehicles with petrol engine (example)

1. Turn signal light
2. Suspension (red)
   Suspension (yellow)
3. Electrical fault
4. Power steering (red)
5. Restraint system
6. Seat belt
7. Distance warning
8. ABS
9. Tyre pressure monitoring system
10. Engine diagnostics
11. ESP® OFF
    ESP®
12. Engine operating temperature
13. Reduced power
14. Door open
15. Power/Charge display
16. Electric parking brake (yellow)
17. Electric parking brake (red)
18. Brakes (red)
19. Reserve fuel with fuel filler flap location indicator
20. Fuel level
21. Side lights
    Low beam
    High beam
22. Rear fog light
23. Mercedes-Benz emergency call system

For more information on indicator lamps, see the "Overview of status indicators on the driver display" section

Centre console

Centre console, middle section

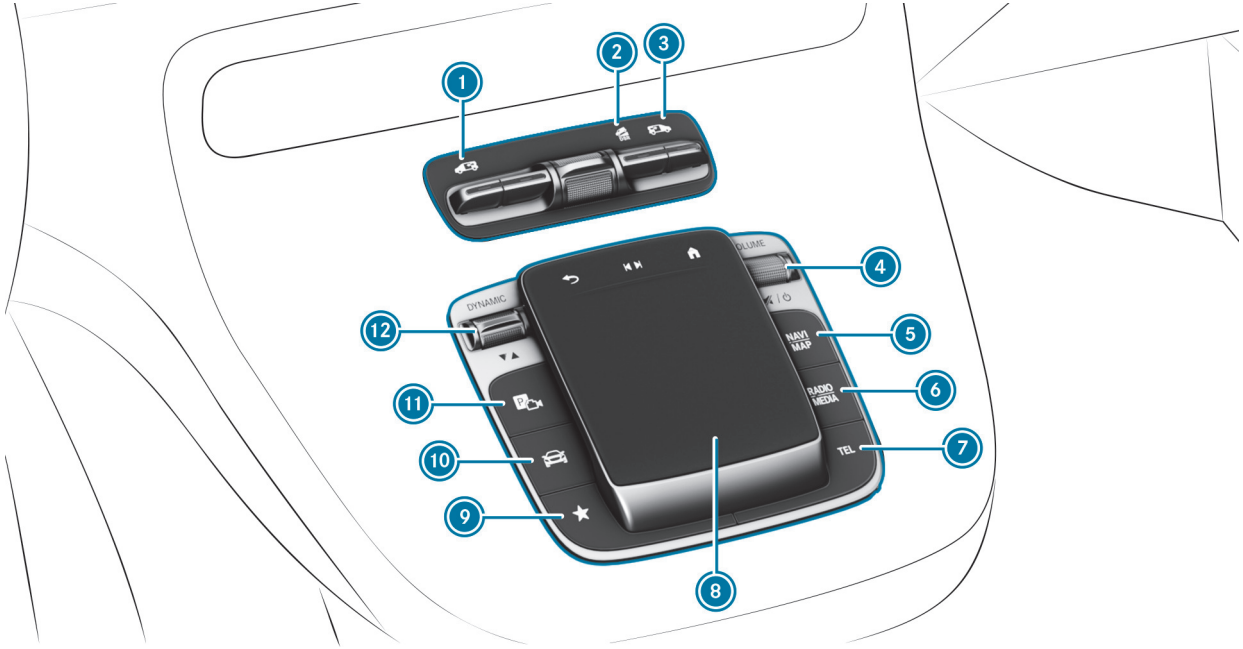

Vehicle with automatic transmission (example)

1. Opens and closes the electric sliding door on the left side of the vehicle
2. DSR (Downhill Speed Regulation)
3. Opens and closes the electric sliding door on the right side of the vehicle
4. Switches the multimedia system on/off
   Adjusts and mutes the volume
5. Calls up navigation
6. Calls up radio or media
7. Calls up the telephone
8. Touchpad
9. Calls up favourites
10. Calls up vehicle functions
11. Active Parking Assist
12. DYNAMIC SELECT switch

Centre console, lower section

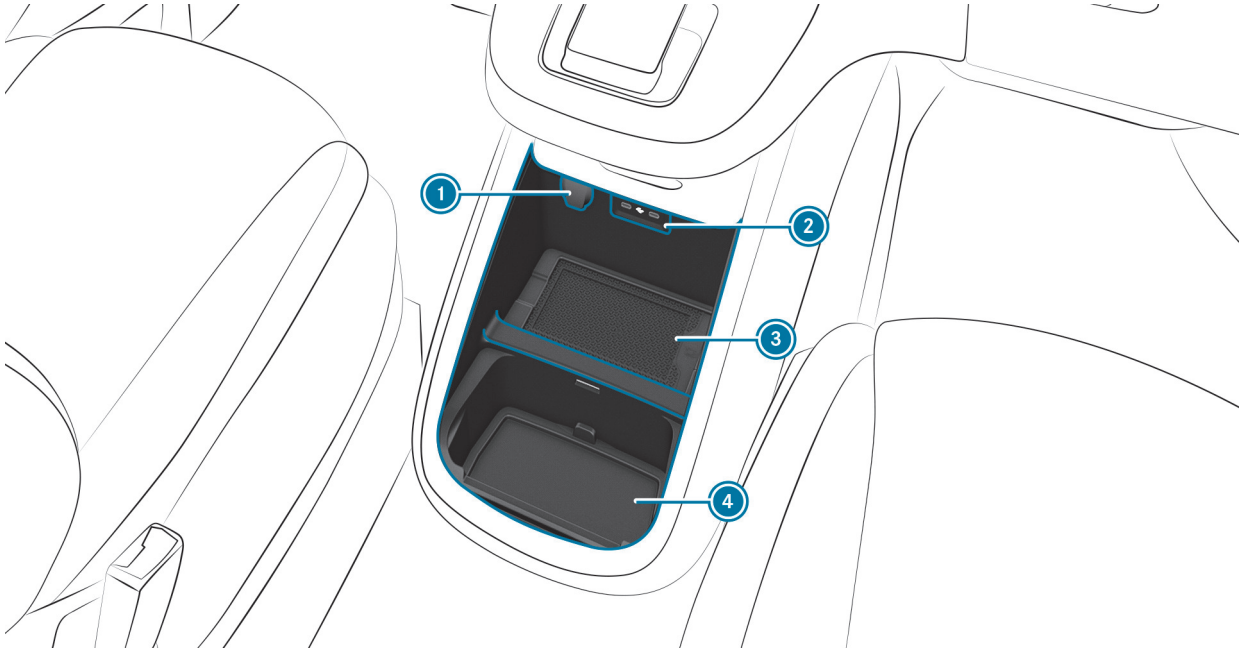

Storage compartment with cover

1 12 V socket
Cigarette lighter
2 Media Interface with USB-C ports
3 Wireless charging mobile phone
Stowage space
4 Stowage space

Centre console between the driver's and front passenger seats

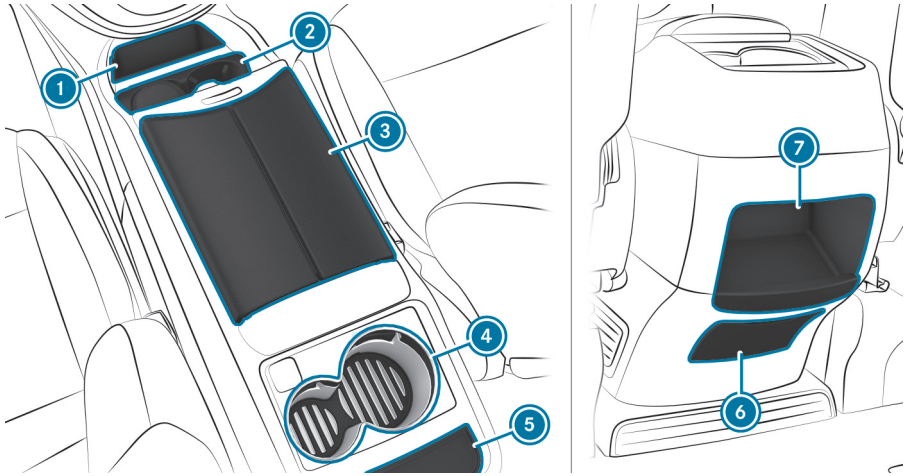

1 Stowage compartment

2 Cup holder

3 Stowage compartment

Media Interface with two USB ports and an SD card slot

4 Temperature-controlled cup holder

5 Stowage compartment

6 Cigarette lighter

Ashtray

12 V socket

7 Stowage compartment

Overhead control panel

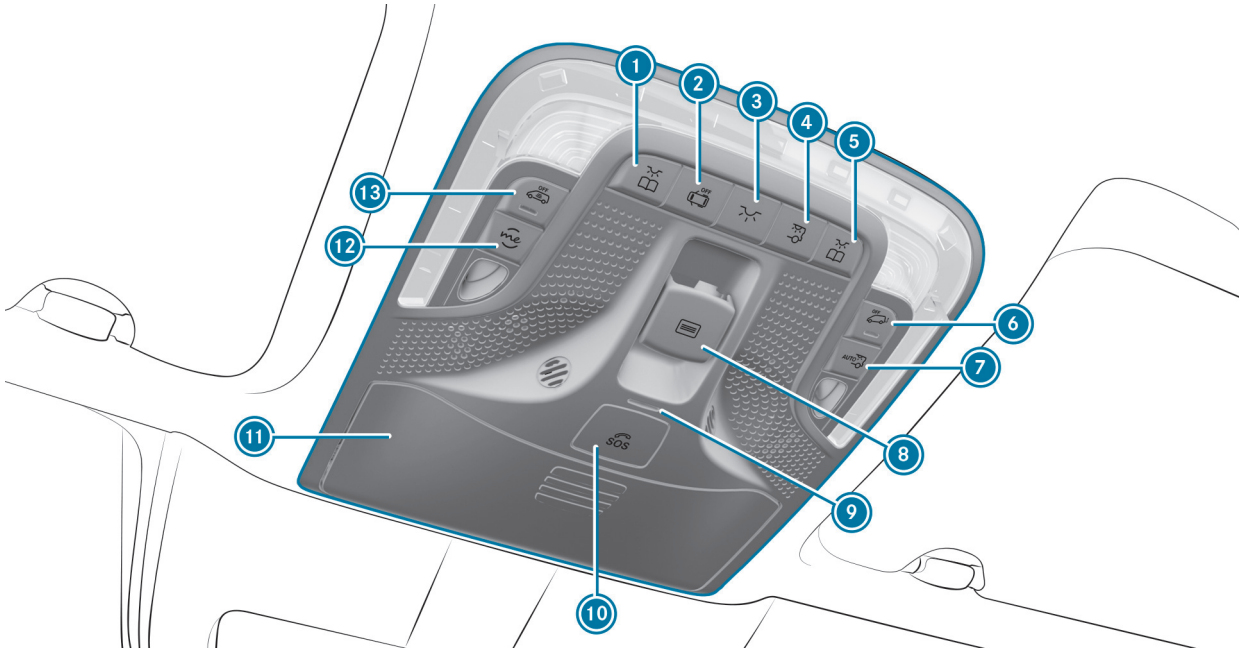

1. Switches the left-hand reading lamp on/off
2. Switches automatic interior lighting control on/off
3. Switches the front interior lighting on/off
4. Switches the rear/load compartment lighting on/off
5. Switches the right-hand reading lamp on/off
6. Deactivates tow-away protection
7. Switches automatic night lighting in the rear or the load compartment on/off
8. Opens/closes the panorama sliding sunroof

Opens/closes the roller sunblinds

9. ATA indicator lamp
10. SOS button
11. Glasses compartment
12. me button for Mercedes-Benz Support calls
13. Deactivates interior protection

Door operating unit

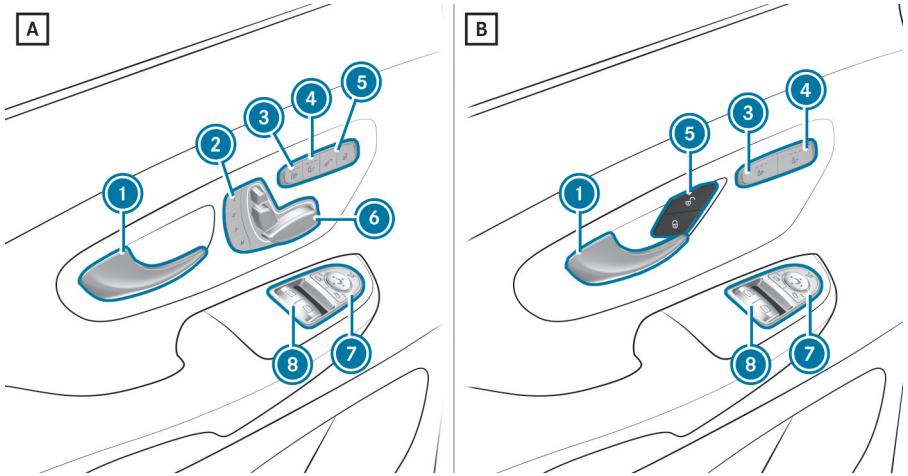

A Vehicles with electrically adjustable front seats

B Vehicles with manually adjustable front seats

1 Opens the door >

2 M 1 2 3 Saves the seat and outside mirror adjustment >

3 Seat heating >

4 Seat ventilation >

5 Unlocks/locks the vehicle >

6 Adjusts the seat electrically >

7 Adjusts and extends/retracts the outside mirrors electrically >

8 Opens/closes the front side windows >

Emergencies and breakdowns

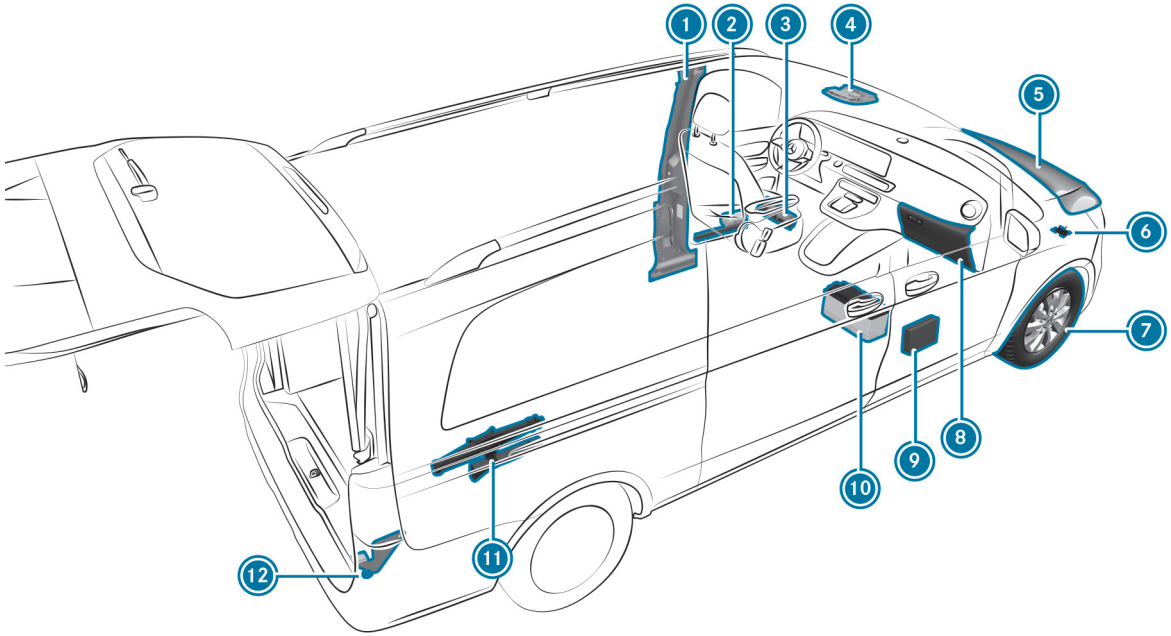

1. B-pillar with:
   - QR code for accessing the rescue card
2. Storage compartment for:
   - Safety vest
   - Warning triangle
3. Fire extinguisher
4. Overhead control panel:
   - me button for Mercedes-Benz Support call
   - SOS button
5. Check and top up operating fluids
6. Towing or tow-starting
7. Flat tyre
8. Customer literature in the glove box
9. First-aid kit (soft sided)
10. Starting assistance
11. Vehicle tool kit and jack
12. Towing or tow-starting

Back to Contents

Digital Owner's Manual

This interactive PDF works like a website – tap or click a button to jump straight to where you want to go.
You can return here at any time via the navigation bar at the top left.

Calling up the Digital Owner's Manual

Calling up the Digital Owner's Manual

Multimedia system:

Settings ▶▶ Info ▶▶ Open Digital Owner's Manual

The Digital Owner's Manual describes the functions and operation of the vehicle and the multimedia system.

▶ Select one of the following menu items in the Digital Owner's Manual:

- Quick start: find the first steps towards adjusting your seat (driver's side).
- Tips: information to prepare you for certain everyday situations with your vehicle.
- Messages: obtain additional information regarding messages on the driver display.
- Language: select the language for the Digital Owner's Manual here.

Find quick answers to queries regarding operation of the vehicle by entering keywords pertaining to any function in the Search entry field.

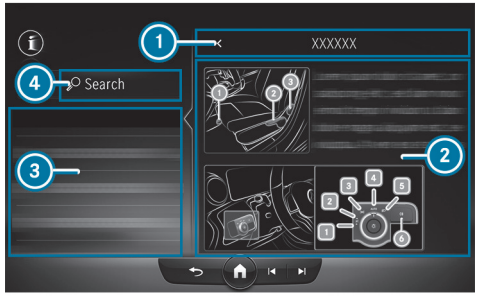

1. Back
2. Contents section
3. Menu
4. Search

Some sections in the Digital Operator's Manual, suchas warning notes, can be expanded and collapsed.

Additional methods of calling up the Digital Owner's Manual:

Driver display: call-up of concise information regarding display messages on the driver display. Show the concise information by pressing ⓘ in the media display.

MBUX Voice Assistant: call-up via the voice control system

Global search: call up search results for contents of the Digital Owner's Manual on the Home Screen

The Digital Owner's Manual is deactivated for safety reasons while driving.

General notes

This interactive PDF works like a website – tap or click a button to jump straight to where you want to go.
You can return here at any time via the navigation bar at the top left.

Environmental protection
Take-back of end-of-life vehicles
Mercedes-Benz GenuineParts
Information about attachments, add-on equipment, installations and conversions
Operating safety
Fitting the licence plate onto the front licence plate bracket
Declarations of conformity and notes on driving in different countries
Diagnostics connection
Notes on changes to the engine output
Qualified specialist workshop
Vehicle registration
Correct use of the vehicle
REACH Regulation
Notes for persons with electronic medical aids
Implied warranty
QR codes for rescue card
Data storage
Copyright

Environmental protection

ENVIRONMENTAL NOTICE
Environmental damage due to operating conditions and personal driving style

The pollutant emissions of the vehicle are directly related to the vehicle's operation.

Operate the vehicle in an environmentally responsible manner to make a contribution to environmental protection. To do this, observe the following recommendations on operating conditions and your personal driving style.

Operating conditions:

- Make sure that the tyre pressures are always correct.
- Do not carry any unnecessary ballast (e.g. a roof rack which is no longer needed).
- Observe the service intervals.
  A regularly serviced vehicle contributes to environmental protection.
- Always have maintenance work carried out at a qualified specialist workshop.

Personal driving style:

- Do not depress the accelerator pedal when starting the engine.
- Do not let the vehicle warm up while stationary.
- Drive carefully and maintain a sufficient distance to other vehicles.
- Avoid frequent, sudden acceleration and braking.
- Shift gears in good time and use each gear only up to ⅔ of the maximum engine speed.
- Switch off vehicle during traffic-related waiting times, e.g. use ECO start/stop function.
- Drive in a fuel-saving manner. Observe the ECO display for a fuel-saving driving style.

Take-back of end-of-life vehicles

EU COUNTRIES ONLY:
Mercedes-Benz will take back your end-of-life vehicle for environment-friendly disposal in accordance with the European Union (EU) End-Of-Life Vehicles Directive.

A network of vehicle take-back points and dismantlers has been established for you to return your vehicle. You can leave it at any of these points free of charge. This makes an important contribution to closing the recycling circle and conserving resources.

For further information about the recycling and disposal of end-of-life vehicles, and the take-back conditions, please visit the national Mercedes-Benz website for your country.

Mercedes-Benz GenuineParts

ENVIRONMENTAL NOTE
Environmental damage caused by not using recycled reconditioned components

Mercedes-Benz AG offers recycled reconditioned components and parts with the same quality as new parts. The same entitlement from the implied warranty is valid as for new parts.

► Recycled reconditioned components and parts from Mercedes-Benz AG.

NOTE
Impairment of the operating efficiency of the restraint systems due to the installation of accessory parts or due to repairs or welding

AIRBAGS AND SEAT BELT TENSIONERS AS WELL AS CONTROL UNITS AND SENSORS FOR THE RESTRAINT SYSTEMS MAY BE INSTALLED IN THE FOLLOWING AREAS OF YOUR VEHICLE:

- Doors
- Door pillars
- Sill
- Seats
- Cockpit
- Driver display
- Centre console

► Do not install accessory parts such as audio systems in these areas.

► Do not carry out repairs or welding.

► Have accessories retrofitted at a qualified specialist workshop.

If you use parts, tyres, wheels or safety-relevant accessories that have not been approved by Mercedes-Benz, the operating safety of the vehicle may be jeopardised. Safety-critical systems such as the brake system may malfunc-

tion. Use only Mercedes-Benz GenuineParts or parts of equal quality. Use only tyres, wheels and accessory parts that are approved for your vehicle model.

Mercedes-Benz tests original parts, conversion parts and accessory parts that have been approved for your vehicle model for reliability, safety and suitability. Despite ongoing market research, Mercedes-Benz is unable to assess other parts. Mercedes-Benz accepts no responsibility for the use of such parts in Mercedes-Benz vehicles, even if they have been approved officially or independently by a testing centre.

Certain parts are officially approved for installation or modification only if they comply with legal requirements. All Mercedes-Benz GenuineParts meet the registration requirements. The use of non-approved parts may invalidate the vehicle's general operating permit.

THIS IS THE CASE IN THE FOLLOWING SITUATIONS:

- The vehicle type changes from that stated in the general operating permit.
- Other road users could be endangered.
- The exhaust gas or noise levels are adversely affected.

Always specify the vehicle identification number (VIN) and engine number when ordering Mercedes-Benz GenuineParts (→ page 743).

Information about attachments, add-on equipment, installations and conversions

NOTES ON BODY/EQUIPMENT MOUNTING DIRECTIVES
For safety reasons, have add-on equipment produced and fitted in accordance with the valid Mercedes-Benz body/equipment mounting directives. These body/equipment mounting directives ensure that the chassis and add-on equipment form one unit and that the greatest possible level of operational and driving safety is achieved.

Both vehicle manufacturers and body manufacturers must always ensure that the products they manufacture come into circulation only in a safe state and do not pose any risks to people. Otherwise, there may be consequences under civil, criminal or public law. All manufacturers are responsible for the products that they have manufactured. Manufacturers of attachments, add-on equipment, installations and conversions must guarantee compliance with Directive 2001/95/EC on general product safety.

The body manufacturer must also ensure compliance with standards concerning operational reliability (in accordance with ISO 26262) and cyber security (in accordance with ISO 21434 and UN R155).

MERCEDES-BENZ RECOMMENDS THE FOLLOWING PROCEDURE FOR SAFETY REASONS:

- Do not make any other changes to the vehicle.
- Obtain approval from Mercedes-Benz in the event of deviations from the approved body/equipment mounting directives.

Acceptance tests performed by public test bodies or official approvals do not rule out safety risks.

Observe the information about genuine Mercedes-Benz parts (⟶ page 103).

You will find the Mercedes-Benz body/equipment mounting directives online on the https://bb-portal.mercedes-benz-vans.com

ⓘ You can obtain further information at a qualified specialist workshop.

ⓘ You can find further information on requesting a check for compatibility with the basic vehicle in the body/equipment mounting directives.

⚠ **WARNING**
Risk of accident and injury in the event of improper conversions or changes to the vehicle

Conversions or changes to the vehicle can prevent systems or components from functioning properly and/or jeopardise the vehicle's operational safety.

► Always have conversions or changes to the vehicle carried out at a qualified workshop.

NOTES ON THE RADIATOR

Even seemingly minor changes to the vehicle, such as attaching a radiator grille in winter, are not permitted. Do not cover the radiator. Do not use any thermal mats, insect protection covers etc.

Otherwise, the values of the vehicle's diagnostic system will be distorted. In some countries, the recording of engine diagnostics data is prescribed by law and must be verifiable and correct at all times.

Operating safety

WARNING
Risk of accident due to malfunctions or system failures

If you do not have the prescribed service/maintenance work or any required repairs carried out, this could result in malfunctions or system failures.

- Always have the prescribed service- and maintenance work or any required repairs carried out in a qualified workshop.

WARNING
Risk of accident or injury due to improper modifications to electronic components

Modifications to electronic components, their software or wiring can impair their functionality and/or the functionality of other networked components or safety-relevant systems.

This can endanger the vehicle's operating safety.

- You must not tamper with wiring, electronic components, or their software.
- Always have work on electrical and electronic devices carried out at a qualified specialist workshop.

If you make any changes to the on-board electronics, the operating permit will be rendered invalid.

Please observe the "On-board electronics" section in the "Technical data".

WARNING
Risk of fire due to flammable material coming into contact with hot parts of the exhaust system

If combustible materials, e.g. leaves, grass or twigs, come into contact with hot parts of the exhaust system, they may ignite.

- When driving off-road or on unpaved surfaces, check the underside of the vehicle at regular intervals.
- In particular, remove any trapped parts of plants or other flammable material.
- If damage should occur, immediately inform a qualified specialist workshop.

NOTICE
Damage to the vehicle due to driving too fast and due to impacts to the underbody or suspension components

IN THE FOLLOWING SITUATIONS IN PARTICULAR, THERE IS A RISK OF DAMAGE TO THE VEHICLE:

- The vehicle makes contact with the ground, e.g. on a high kerb or unpaved road.
- The vehicle is driven too fast over an obstacle, e.g. a kerb, speed bump or pothole.
- A heavy object strikes the underbody or suspension components.

In situations such as these, damage to the body, underbody, suspension components, wheels or tyres may not be visible. Components damaged in this way can unexpectedly fail or, in the case of an accident, may no longer absorb the impact force as intended.

If the underbody panelling is damaged, flammable materials, such as leaves, grass or twigs may accumulate between the underbody and the underbody panelling. If these materials come into contact with hot components of the exhaust system, they may ignite.

► Have the vehicle checked and repaired immediately at a qualified specialist workshop.

or

► If driving safety is impaired while continuing your journey, pull over and stop the vehicle immediately, with due attention to road and traffic conditions, and contact a qualified specialist workshop.

VEHICLES WITH 48 V ON-BOARD ELECTRICAL SYSTEM

DANGER
Risk of fatal injury by touching damaged high-voltage components

Vehicles with a 48 V on-board electrical system contain individual high-voltage components. These high-voltage components are under high voltage.

If you modify component parts of these high-voltage components or touch damaged component parts, you may be electrocuted.

High voltage components may be damaged in an accident, although the damage may not be visible.

► Never perform modifications to component parts of high-voltage components.

► Never touch damaged component parts of high-voltage components.

► Never touch component parts of high-voltage components after an accident.

Vehicles with a 48 V on-board electrical system have high-voltage components. These components are marked with a high-voltage label:

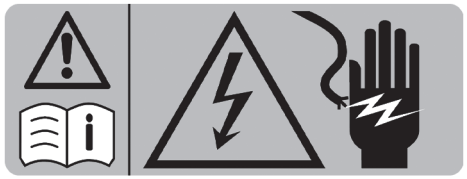

Example

Any work on high-voltage components must only be carried out in a qualified specialist workshop.

Fitting the licence plate onto the front licence plate bracket

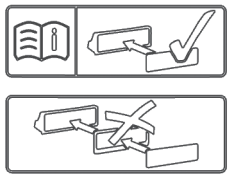

NOTE
Malfunctions and system failures due to incorrect assembly of the licence plate on the front licence plate holder

If the licence plate is incorrectly assembled on the front licence plate holder, sensors, cameras or driving and safety systems may malfunction or fail.

Observe the following points when assembling the licence plate on the front licence plate holder:

- Assemble the licence plate directly on the licence plate holder without advertising media or other holders.
- Mount the licence plate so that it does not protrude from the bottom or side of the licence plate adapter.

Declarations of conformity and notes on driving in different countries

Electromagnetic compatibility

The electromagnetic compatibility of the vehicle components has been checked and certified according to the currently valid version of Regulation UN-R 10.

Country-specific information for regulatory radio components

NOTES ON MODIFICATIONS TO RADIO COMPONENTS
Modifications to radio components may result in the operating permit for the relevant radio components being invalidated. The manufacturer of a radio component will not be held responsible for any such modifications.

NOTES REGARDING THE CROSSING OF NATIONAL BORDERS
You must observe the radio regulatory provisions for the country in which you are currently driving when operating the vehicle.

WIRELESS VEHICLE COMPONENTS
Only for EU and EFTA countries and countries that recognise the EU manufacturer's declaration of conformity:

CE

The following information is valid for all wireless components in the vehicle as well as the information systems and communication devices integrated in the vehicle:

The manufacturers of the wireless components ensure that all wireless components installed in the vehicle conform to Directive 2014/53/EU. The full texts of the EU declarations of conformity are available at the following web address:

https://certificates-of-conformity.corpinter.net/en

Further information is available from any Mercedes-Benz service centre.

ISRAEL ONLY:
It is prohibited to make any change to a vehicle-installed radio component that could affect the wireless specifications of the device, including software changes, replacement of the original antenna, or adding the option to connect the device to an external antenna, without first obtaining approval from the Communica-tions Ministry, because of concern about wireless interference.

UNITED KINGDOM ONLY:

UK CA

The following information is valid for all wireless components in the vehicle as well as the information systems and communication devices integrated in the vehicle:

The manufacturers of the radio components declare that all radio equipment installed in the vehicle is in compliance with the relevant statutory requirements. The full texts of the declarations of conformity are available at the following web address:

https://certificates-of-conformity.corpinter.net/en

BRAZIL ONLY:

ANATEL

Note on the two-way radio system in the vehicle:

This system is not subject to protection against harmful interference and must not cause interference in properly approved systems.

JAMAICA ONLY:
All wireless vehicle components have received type approval from the SMA.

FOR COUNTRIES OF THE EURASIAN ECONOMIC UNION ONLY:

The manufacturers of the wireless components installed in the vehicle hereby declare that all wireless components installed in the vehicle conform to the technical regulations for two-way radios. You can obtain further information from any Mercedes-Benz Service Centre.

UKRAINE ONLY:

The manufacturers of the wireless components installed in the vehicle hereby declare that all wireless components installed in the vehicle conform to the technical regulations for two-way radios. Further information is available from any Mercedes-Benz service centre.

Battery

FOR EU COUNTRIES AND COUNTRIES THAT RECOGNISE THE EU MANUFACTURER'S DECLARATION OF CONFORMITY:

For all 48 V and high-voltage vehicle batteries, once the applicable requirements under regulation (EU) 2023/1542 come into effect, the required information will be available at the following web address:

https://certificates-of-conformity.corpinter.net/en

Jack

ONLY FOR EU AND EFTA COUNTRIES AND COUNTRIES THAT RECOGNISE THE EU MANUFACTURER'S DECLARATION OF CONFORMITY:

The following information applies for the jack:

The manufacturer of the jack guarantees that the jack complies with the guideline 2006/42/EC. A complete text of the EU Declaration of Conformity can be obtained by visiting the following website:

https://certificates-of-conformity.corpinter.net/en

You can obtain further information from any Mercedes-Benz service centre.

UNITED KINGDOM ONLY:

The following information applies for the jack:

The manufacturer of the jack guarantees that the jack complies with the Supply of Machinery (Safety) Regulations 2008 . A complete text of the UKCA Declaration of Conformity can be obtained by visiting the following website:

https://certificates-of-conformity.corpinter.net/en

Diagnostics connection

The diagnostics connection is a technical interface in the vehicle. It is used, forexample, during repair and maintenance work or for issuing readouts of vehicle data in a specialist workshop. Diagnostic devices should therefore be connected only in a qualified specialist workshop.

WARNING
Risk of accident as a result of connecting devices to the diagnostics connection

If you connect devices to the vehicle's diagnostics connection, functioning of vehicle systems and operational safety can become impaired.

- It is recommended for safety reasons that only products which have been approved by a Mercedes-Benz service centre be used and connected.

WARNING
Risk of accident due to objects in the driver's footwell

Objects in the driver's footwell may impede pedal travel or block a depressed pedal.

This will jeopardise the operating and road safety of the vehicle.

- Stow all objects in the vehicle securely so that they cannot get into the driver's footwell.
- Make sure that there is always sufficient clearance for the pedals.
- Always fit the floor mats securely and as prescribed.
- Do not use loose floor mats and do not place floor mats on top of one another.

NOTE
Battery discharging from using devices connected to the diagnostics connection

Using devices at the diagnostics connection drains the battery.

- Check the charge level of the battery.
- If the charge level is low, charge the battery, e.g. by driving a considerable distance.

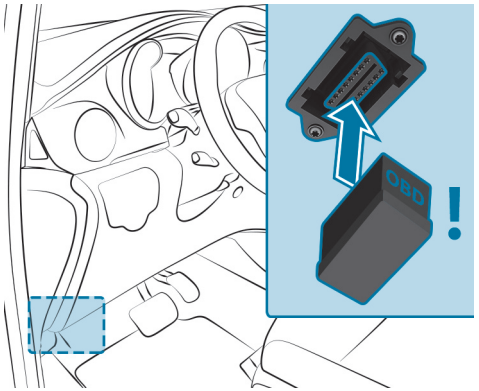

THE CONNECTION AND USE OF ANOTHER DEVICE ON THE DIAGNOSTICS CONNECTION CAN HAVE THE FOLLOWING EFFECTS:

- Malfunctions in the vehicle system
- Permanent damage to vehicle components

Please refer to the warranty terms and conditions regarding this.

In addition, connecting equipment to the diagnostics connection may lead to emissions monitoring information being reset, forexample. This may lead to the vehicle failing to meet the requirements of the next emissions inspection during the main inspection.

Notes on changes to the engine output

OUTPUT INCREASES MAY:

- Change the emission values.
- Lead to malfunctions.
- Result in consequential damage.

The operating safety of the vehicle is not guaranteed in all situations.

IF THE VEHICLE'S ENGINE OUTPUT IS INCREASED:

- The tyres, suspension, brake system and engine cooling system must be adapted to the increased engine output.
- The vehicle must be recertified.
- Report changes in output to the accident insurance body.

This will otherwise lead to the invalidation of the vehicle's general operating permit and its insurance coverage.

If you sell the vehicle, inform the buyer of any alterations to the vehicle's engine output. Otherwise, this may constitute a punishable offence under national law.

Qualified specialist workshop

A qualified specialist workshop has the necessary special skills, tools and qualifications to correctly carry out any necessary work on your vehicle. This particularly applies to safety-critical work.

ALWAYS HAVE THE FOLLOWING WORK ON THE VEHICLE CARRIED OUT AT A QUALIFIED SPECIALIST WORKSHOP:

- Safety-critical work
- Service- and maintenance work
- Repair work
- Modifications as well as installations- and conversions
- Work on electronic components
- **Vehicles with 48 V on-board electrical system:** work on the high-voltage component of the 48 V on-board electrical system

Mercedes-Benz recommends that you use a Mercedes-Benz service centre for this purpose.

Vehicle registration

Mercedes-Benz may ask its service centres to carry out technical inspections on certain vehicles. The quality or safety of the vehicles is improved as a result of the inspection.

Mercedes-Benz can only inform you about vehicle checks if it has your registration data.

IN THE FOLLOWING CASES, YOUR VEHICLE MAY NOT BE REGISTERED TO YOU YET:

- you did not purchase your vehicle at an authorised specialist dealer.
- your vehicle has not yet been inspected at a Mercedes-Benz service centre.

It is advisable to register your vehicle with a Mercedes-Benz service centre.

Inform Mercedes-Benz as soon as possible about any change in address or vehicle ownership. You can do this at a Mercedes-Benz service centre, for example.

Correct use of the vehicle

If you remove warning stickers, you or others may fail to recognise the dangers. Leave warning stickers in position.

OBSERVE THE FOLLOWING INFORMATION IN PARTICULAR WHEN OPERATING THE VEHICLE:

- Safety notes in these operating instructions
- Technical data for the vehicle
- Traffic rules and -regulations of the country in which you are currently located
- Laws pertaining to motor vehicles and safety standards of the country in which you are currently located
- Radio regulations of the country in which you are currently located

WARNING
Risk of fire and accident when transporting substances which are hazardous to health or react aggressively

Gases and fluids can even escape from containers which are fully closed.

This can adversely affect your concentration during the journey and your health. Electronic component parts may also experience malfunctions, short circuits or system failures.

► Do not stow or transport any substances which are hazardous to health and/or aggressively reactive in the vehicle interior.

SUBSTANCES THAT CONSTITUTE A HEALTH HAZARD OR REACT AGGRESSIVELY INCLUDE, FOR EXAMPLE:

- Solvents
- Fuel
- Oil and grease
- Cleaning agents
- Acid

REACH Regulation

EU and EFTA countries only:

The REACH Regulation (Regulation (EC) No. 1907/2006, Article 33) stipulates a duty to supply information about substances of very high concern (SVHCs).

Mercedes-Benz AG acts to the best of its knowledge to prevent these SVHCs from being used and to enable customers to safely handle these substances. According to supplier information and internal product information, there are SVHCs known to Mercedes-Benz AG that are found in individual components of this vehicle in quantities of over 0.1 percent by weight.

FURTHER INFORMATION CAN BE OBTAINED AT THE FOLLOWING ADDRESSES:

- https://reach.mercedes-benz.com/de/home/
- https://reach.mercedes-benz.com/en/home/

Notes for persons with electronic medical aids

Despite meticulous development of their vehicle systems, -Mercedes-Benz AG cannot completely rule out the interaction of vehicle systems with electronic medical aids, suchas cardiac pacemakers.

In addition, there are components built into the vehicle that can generate magnetic fields on a par with permanent magnets, regardless of the operating status of your vehicle. These fields can be found, for example, in the area around the multimedia and sound systems, as well as in the seating area, depending on the respective vehicle equipment.

IT IS THEREFORE POSSIBLE FOR THE FOLLOWING TO OCCUR IN ISOLATED CASES, DEPENDING ON THE AIDS USED:

- medical aids malfunctioning
- adverse health effects

Observe the notes and warnings of the manufacturer of the medical aids; if in doubt, contact the device manufacturer and/or your doctor. If there is continuing uncertainty concerning the possibility of medical aids malfunctioning,-Mercedes-Benz AG recommends using only few electrical vehicle systems and/or maintaining a distance from the components.

ONLY HAVE REPAIRS AND MAINTENANCE WORK IN CLOSE PROXIMITY TO THE FOLLOWING COMPONENTS CARRIED OUT BY A QUALIFIED SPECIALIST WORKSHOP:

- vehicle components carrying live voltage
- transmission aerials
- multimedia system and sound system

If you have any queries or suggestions, consult a qualified specialist workshop.

Implied warranty

NOTE
Damage to the vehicle arising from violation of this Owner's Manual.

Damage to the vehicle can arise from violation of this Owner's Manual.

Such damage is not covered by either the Limited Warranty or the new or used-vehicle warranty.

► Observe the instructions in this Owner's Manual on proper operation of your vehicle as well as regarding possible vehicle damage.

QR codes for rescue card

The QR code stickers are affixed to the B-pillars on the driver's side and front passenger side. In the event of an accident, emergency services can use the QR code to quickly determine the corresponding rescue card for your vehicle. The current rescue card contains the most important information pertaining to your vehicle (e.g.routing of the electric lines) in a compact format.

Additional information can be obtained at: https://rk.mb-qr.com/de/

Data storage

Data processing in the vehicle

ELECTRONIC CONTROL UNITS
Electronic control units are fitted in your vehicle. Control units process data they receive from vehicle sensors, forexample, generate themselves or exchange between themselves. Some control units are required for the safe operation of your vehicle. For example, some assist you when driving, suchas driver assistance systems, while others enable convenience or infotainment functions.

The following provides you with general information regarding data processing in the vehicle. Additional information regarding which data in your vehicle are collected, saved and transmitted to third parties and for what purpose can be found in the information directly related to the functional characteristics in question in their respective Owner's Manual. This information is available online and digitally, depending on the vehicle's equipment.

PERSONAL DATA
A unique vehicle identification number identifies every vehicle. Depending on the country, this vehicle identification number can be used by, forexample, governmental authorities to determine the owner's identity. There are other possibilities for using data collected from the vehicle to identify the owner or driver, suchas the licence plate number.

Therefore, data generated or processed by control units may be attributable to a person or, under certain conditions, become attributable to a person. Depending on which vehicle data are available, it may be possible to make inferences about, forexample, your driving behaviour, location, route or use patterns.

LEGAL REQUIREMENTS REGARDING THE DISCLOSURE OF DATA
If legally required to do so, manufacturers are, in individual cases, legally obliged to provide governmental entities, upon request and to the extent required, data stored by the manufacturer. Forexample, this may be the case during the investigation of a criminal offence.

Governmental entities are themselves authorised to read out data from the vehicle in individual cases and within the applicable legal framework. In the case of an accident, information that can help with an investigation can be taken from the airbag control unit, forexample.

OPERATIONAL DATA IN THE VEHICLE
This is data regarding the vehicle's operation, which control units have processed.

THIS INCLUDES THE FOLLOWING DATA, FOREXAMPLE:

- Vehicle status information suchas the speed, longitudinal acceleration, lateral acceleration, number of wheel revolutions or the fastened seat belts display
- Ambient conditions, suchas temperature, rain sensor or distance sensor

Generally, these are volatile data and will not be stored beyond the period of operation but will only be processed within the vehicle itself. Control units, forexample, vehicle keys, often contain data memories. Their use permits the temporary or permanent documentation of technical information about the vehicle's operating state, component loads, maintenance requirements and technical events or faults.

DEPENDING ON THE TECHNICAL EQUIPMENT, THE FOLLOWING DATA ARE STORED:

- Operating status of system components, suchas fill levels, tyre pressure or battery status
- Malfunctions or faults in important system components, suchas lights or brakes
- System reactions in special driving situations, suchas an airbag deployment or the intervention of stability control systems
- information on events leading to vehicle damage

In certain cases, storing data that would have otherwise been temporary may be required. This may be the case if the vehicle has detected a malfunction, forexample.

If you use services suchas repair services and maintenance work, stored operational data and the vehicle identification number can be read out and used. They can be read out by service network employees, suchas workshops and manufacturers or third parties, suchas breakdown services. The same is true in the case of warranty claims and quality assurance measures.

In general, the readout is performed via the legally prescribed port for the diagnostics connection in the vehicle. The selected operating data document the vehicle's or individual components' technical conditions, help with fault diagnosis, compliance with warranty obligations and quality improvement. To that end, these data, particularly information about component loads, technical events, malfunctions and other faults, may be transmitted along with the vehicle identification number to the manufacturer. Furthermore, the manufacturer is subject to product liability. For this reason, the manufacturer also uses operational data from the vehicle, forexample, for recalls. These data can also be used to examine the customer's warranty and guarantee claims.

Fault memories in the vehicle can be reset by a service outlet or at your request as part of repair or maintenance work.

CONVENIENCE AND INFOTAINMENT FUNCTIONS

You can store the vehicle's convenience and individual settings and change or reset them at any time.

DEPENDING ON THE VEHICLE EQUIPMENT, THIS INCLUDES THE FOLLOWING SETTINGS, FOREXAMPLE:

- Seat and steering wheel positions
- Suspension and climate control settings
- Individual settings, suchas interior lighting

Depending on the selected equipment, you can import data into vehicle infotainment functions yourself.

DEPENDING ON THE VEHICLE EQUIPMENT, THIS INCLUDES THE FOLLOWING DATA, FOREXAMPLE:

- Multimedia data, suchas music, films or photos for playback in an integrated multimedia system
- address book data for use in connection with an integrated hands-free system or an integrated navigation system
- entered navigation destinations
- data about the use of Internet services

These data for convenience and infotainment functions may be saved locally in the vehicle or on a device connected to the vehicle, suchas a smartphone, USB flash drive or MP3 player. If you have entered these data yourself, you can delete them at any time.

These data are transmitted only from the vehicle to third parties at your request. This applies, particularly when you use online services per your selected settings.

SMARTPHONE INTEGRATION (E.G. ANDROID AUTO OR APPLE CARPLAY®)
If your vehicle is accordingly equipped, you can connect your smartphone or another mobile end device to the vehicle. You can then control them by employing the control elements integrated into the vehicle. Images and audio from the smartphone can be output via the multimedia system. Certain information is simultaneously transferred to your smartphone. Depending on the type of integration, thisincludes position data, day/night mode and other general vehicle statuses. For more information, please consult the Owner's Manual for the vehicle or the infotainment system.

This integration allows the use of selected smartphone apps, suchas navigation or music player apps. There is no further interaction between the smartphone and the vehicle; in particular, vehicle data is not directly accessible. The type of additional data processing is determined by the provider of the app being used. The settings you can make, if any, depend on the specific app and your smartphone's operating system.

Online services

WIRELESS NETWORK CONNECTION
If your vehicle has a wireless network connection, data can be exchanged between your vehicle and other systems. The wireless network connection is made possible by the vehicle's own transmitter and receiver or by a mobile end device that you have brought into the vehicle, forexample, a smartphone. Online functions can be used via this wireless network connection. This includes online services and applications/apps provided to you by the manufacturer or by other providers.

MANUFACTURER'S OWN SERVICES
Regarding the manufacturer's online services, the individual functions are described by the manufacturer in a suitable place, forexample, in the Owner's Manual or on the manufacturer's website, where the relevant data protection information is also given. Personal identification data may be used to provide online services. Data is exchanged via a secure connection, e.g. the manufacturer's designated IT systems. Any personal data which are collected, processed and used, other than for the provision of services, is done so exclusively on the basis of legal permission. This is the case, forexample, for a legally prescribed emergency call system, a contractual agreement or when consent has been given.

You can have services and functions, some of which are subject to a fee, activated or deactivated. This excludes legally prescribed functions and services, suchas an emergency call system.

SERVICES OF THIRD PARTIES
If you use online services from other providers (third parties), these services are the responsibility of the provider in question and subject to that provider's data protection conditions and terms of use. As a general rule, the manufacturer has no influence on the content exchanged.

For this reason, when services are provided by third parties, please ask the service provider in question for information about the type, extent and purpose of the collection and use of personal data.

ONBOARD LOGIC UNIT (OLU)
The Onboard Logic Unit (OLU) is available to commercial customers.

It contains control units, including aerials for connection via wireless networks, that permit the exchange of data between your vehicle and other systems. The control units can be used in conjunction with service provided by a third party. Under certaincircumstances, these services may alter the basic configuration of the vehicle and could affect the performance of certain vehicle functions.

For further information about specific services, read the Owner's Manual of the third-party provider. For further information about the Onboard Logic Unit, consult a Mercedes-Benz Service Centre.

If you, yourself, do not own and are not responsible for the vehicle, you may notknow the current status of the Onboard Logic Unit. For further information

concerning the services which are currently active, including any data which may be being processed as defined by the GDPR, please contact the person responsible for the vehicle.

Data protection rights

Depending on your country or the equipment and range of functions of your vehicle as well as the services you use and the services on offer, you are entitled to different data protection rights. Further information on data protection and your data protection rights can either be found on the manufacturer's website or you will receive this information as part of the various services and service offers. There, you will also find the contact information for the manufacturer and its data protection officer.

At a workshop, forexample, with the support of a specialist and possibly for a fee, you can have data read out which is stored only locally in the vehicle.

Copyright

Information on licences for free and open-source software used in your vehicle is available along with updates online at:

https://www.mercedes-benz.com/opensource

Occupant safety

This interactive PDF works like a website – tap or click a button to jump straight to where you want to go.
You can return here at any time via the navigation bar at the top left.

Brief overview of most important points

Information on the automatic functions of the restraint system

Purpose and function of the restraint system

Seat belts

Airbags

Brief overview of most important points

Basic information

IN PARTICULAR ENSURE THE FOLLOWING CONDITIONS TO ENABLE THE COMPONENTS OF THE RESTRAINT SYSTEM TO UNFOLD THEIR PROTECTIVE POTENTIAL:

- Sit correctly (⟶ page 131).
- Fasten the seat belt correctly (⟶ page 132).
  - Function of the seat belt warning lamp (⟶ page 135).
  - Function of the rear seat belt status display (⟶ page 135).
- The restraint system warning lamp has not gone out after the self-test (⟶ page 135).
- The indicator lamps PASSENGER AIR BAG display the correct status of the front passenger airbag (⟶ page 137).

FOR CLEAR UNDERSTANDING
The chapter "Occupant safety" includes information on equipment, functions and behaviours that contribute directly to safety of vehicle occupants.

THE INFORMATION IS STRUCTURED AS FOLLOWS:

- **The most important information in brief:** this chapter provides an overview of the relationship between the restraint system and the correct behaviour of all vehicle occupants.
- **Specific information:** further sections in the chapter "Occupant safety" provide specific information on the equipment and functions of the restraint system.
- **Keyword search:** you can also find specific topics using the search field in the Digital Operating Instructions.

INFORMATION ON THE FOLLOWING SUBJECTS, AMONG OTHERS, IS NOT PROVIDED IN THE CHAPTER "OCCUPANT SAFETY":

- Children in the vehicle (⟶ page 153)
- Driving and driving safety systems (⟶ page 391)
- Stowage areas (⟶ page 619)

DEFINING GENERIC TERMS CLEARLY

IN THESE OPERATING INSTRUCTIONS, THE FOLLOWING GENERIC TERMS ARE USED:

- **Occupant safety:** comprises the following interacting factors which help to keep loads and consequences on the vehicle occupants as low as possible following an accident.
  - the protective effect of the vehicle structure
  - the components of the restraint system and their correct handling
  - correct and risk-minimising behaviour of vehicle occupants

  For the safety of all vehicle occupants, always follow the instructions and warnings in these operating instructions. If necessary, also inform passengers of these.
- **Restraint system:** comprises those components which help prevent vehicle occupants from potentially coming into contact with parts of the

vehicle interior. The seat belts and airbags, for example, are components of the restraint system.

- **Child restraint system:** you can find all information on this subject in the chapter "Children in the vehicle" (→ page 153).

BE DILIGENT
For the components of the restraint system to provide the intended level of protection, it is essential that you are seated correctly and that the seat belt is correctly secured.

Carelessness regarding the seating position and putting on the seat belt may have serious consequences. Be diligent and make sure that all vehicle occupants are sitting correctly and have fastened their seat belts properly before starting every journey (→ page 131).

Information on the correct seat position

The seat position must be correct in order for the components of the restraint system to provide the intended level of protection.

The seat position influences both the protection provided by the seat belt and the additional protection provided by the airbag.

A correct seat position in which the seat is nearly perfectly upright and a correctly fastened seat belt reduce the risks posed by the airbag when it is deployed.

WARNING
Risk of injury- or death due to an incorrect seat position

If you deviate from the correct seat position, the airbag cannot provide its intended protective function.

Each vehicle occupant must make sure of the following.

- ► Put the seat in the correct position.
- ► Fasten seat belts correctly.
- ► Observe the following information.

IN ORDER FOR THE RESTRAINT SYSTEM TO PROVIDE THE INTENDED LEVEL OF PROTECTION, OBSERVE THE FOLLOWING INFORMATION:

- Before starting your journey, adjust your seat correctly (→ page 216).

  When doing so, make sure you are able to fasten your seat belt correctly. The shoulder belt strap must be routed forward from the seat belt outlet over the centre of your shoulder.
- Keep your distance from the airbags, especially the front airbags. Set the driver's seat and front passenger seat as far back as possible while making sure the seat belt is fastened correctly.
- If persons are sitting on the rear seats, vehicle occupants should maintain a sufficient distance to the parts of the vehicle interior in front of them.
- Make sure there are no people, animals or objects between the vehicle occupants and an airbag.
- If you are the driver, observe the following information on the correct position of the driver's seat (→ page 216).

  Only hold the steering wheel by the steering wheel rim. This allows the driver's airbag to fully deploy.

During pregnancy in particular, it is important to ensure the greatest possible distance from the steering wheel due to the change in the mother's stature and the unborn child.

- Assume a nearly upright sitting posture, with your buttocks positioned as far back as possible in the gap between the seat cushion and the seat backrest.

  Your back must rest as flatly and as firmly as possible against the seat backrest.
- While driving, do not lean forward and do not lean against the door or side window. You may otherwise be in the deployment area of the airbags.
- Sit with your feet resting on the floor, if possible. Your thighs are slightly supported by the seat cushion.

  Do not put your feet on the cockpit, for example. Your feet may otherwise be in the deployment area of the airbag.
- Fasten the seat belt correctly (⟶ page 132).

Notes on wearing the seat belt correctly

Always fasten your seat belt correctly before starting a journey. Only a seat belt which is worn correctly can provide the intended level of protection.

> ⚠ **WARNING**
> Risk of injury or death due to incorrectly fastened seat belt
>
> If the seat belt is not worn correctly, it cannot perform its intended protective function.
>
> In addition, an incorrectly fastened seat belt can also cause injuries, for example, in the event of an accident or when braking or changing direction suddenly.
>
> ► Always ensure that all vehicle occupants have their seat belts fastened correctly and are sitting properly.

> ⚠ **WARNING**
> Risk of injury or death when additional restraint systems are not used for persons with a smaller stature
>
> Persons under 1.50 m tall cannot wear the seat belt correctly without a suitable additional restraint system.
>
> ► Always secure persons under 1.50 m tall in a suitable restraint system.

Observe the following information on the correct seat position and posture (⟶ page 131).

EACH VEHICLE OCCUPANT MUST OBSERVE THE FOLLOWING NOTES IN PARTICULAR:

- The seat belt must not be twisted.
- The shoulder belt strap must be routed forward from the seat belt outlet over the centre of your shoulder.

- The shoulder belt strap should neither touch your neck nor be routed under your arm or behind your back.
- The lap belt must be routed as low down across the hips as possible.

  In addition, push the lap belt down as far as possible across your hips and pull tight with the shoulder belt strap. Never route the lap belt across your abdomen.
- After being tightened, the shoulder belt strap and lap belt must fit snugly against the body.
- Particularly during pregnancy, the instructions for wearing the seat belt correctly must be followed diligently due to the change in the mother's stature and the unborn child (⟶ page 133).
- Avoid wearing bulky clothing, e.g. a winter coat.
- Never route the seat belt across sharp, pointed, abrasive or fragile objects.
- Only one person should use each seat belt at any one time.
- Never secure objects with a seat belt if the seat belt is being used by one of the vehicle's occupants.

  Also ensure that no objects, e.g. cushions, are ever placed between a person and the seat.

If you are driving with a child in the vehicle, observe the information in the chapter "Children in the vehicle" (⟶ page 153).

Observe the instructions for loading the vehicle when securing objects, luggage or loads (⟶ page 619).

Wearing a seat belt during pregnancy

BE DILIGENT

OBSERVE THE FOLLOWING INSTRUCTIONS DILIGENTLY, PARTICULARLY WHEN PREGNANT DUE TO THE CHANGE IN STATURE AND THE UNBORN CHILD:

- Correct seat position and posture
- Wear the seat belt correctly

The correct seat position with a nearly upright sitting posture and a correctly fastened seat belt reduce the risks for the mother and unborn child in the event of an accident.

Particularly when pregnant maintain as large a distance as possible between your stomach and the steering wheel due to the change in your stature and the unborn child.

If you cannot ensure sufficient distance from the steering wheel for safe operation of the vehicle, another person should drive the vehicle.

ⓘ Mercedes-Benz recommends that you seek professional advice, e.g. from a doctor, regarding the possible risks of driving a vehicle when pregnant.

WEARING A SEAT BELT

WHEN PREGNANT OBSERVE THE FOLLOWING INSTRUCTIONS IN PARTICULAR:

- Push the lap belt down as far as possible across your hips and pull it tight with the shoulder belt strap. Never route the lap belt across your stomach when pregnant.
- The shoulder strap should run along the side of your stomach when pregnant.
- Never place objects such as cushions between a person and the seat belt.

Fastening and adjusting seat belts

If the seat belt is pulled quickly or sharply, the seat belt retractor locks. The seat belt strap cannot be pulled out any further.

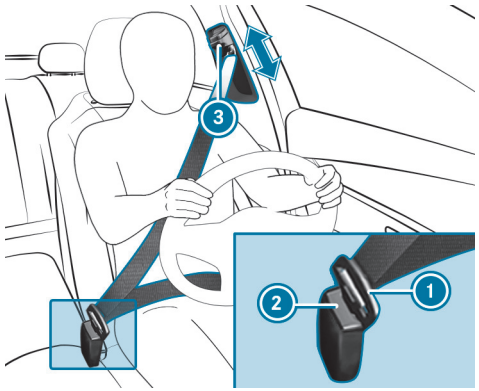

- Always engage seat belt tongue (1) of the seat belt into seat belt buckle (2) of the corresponding seat.
- **To adjust the seat belt height:** press button (3) on the seat belt outlet and slide the seat belt outlet to the desired position.
- **To engage the seat belt outlet:** release button (3) and ensure that the seat belt outlet engages.

> **NOTE**
> Deployment of components of the restraint system when the front passenger seat is unoccupied and a seat belt is buckled
>
> When the front passenger seat is unoccupied and the seat belt tongue of the seat belt is engaged in the seat belt buckle, components of the restraint system may deploy unnecessarily on the front passenger side, e.g. the seat belt tensioner.
>
> - Only buckle the seat belts as intended.

Function of the restraint system warning lamp

When the vehicle is switched on, a self-test is performed, during which the restraint system warning lamp lights up. It goes out no later than a few seconds after the vehicle is started. The components of the restraint system are then functional.

A MALFUNCTION HAS OCCURRED IN THE RESTRAINT SYSTEM IN THE FOLLOWING CASES:

- The restraint system warning lamp does not light up or lights up continuously when the vehicle is switched on.
- The restraint system warning lamp lights up continuously or repeatedly during a journey.

If components of the restraint system have been deployed, the restraint system warning lamp lights up continuously.

> ⚠ **WARNING**
> Risk of injury due to malfunctions in the restraint system
>
> Components in the restraint system may be activated unintentionally or not deploy as intended in an accident.
>
> ► Have the restraint system checked and repaired immediately at a qualified specialist workshop.

Mercedes-Benz recommends that you have the vehicle towed to a qualified specialist workshop.

Function of the seat belt warning lamp

The seat belt warning lamp in the driver display is a reminder that all vehicle occupants must wear their seat belts correctly.

A warning tone may also sound.

The seat belt warning goes out when the driver and front passenger fasten their seat belts.

Only for certain countries: regardless of whether the driver's and front passenger's seat belts are already fastened, the seat belt warning lamp lights up for six seconds every time the vehicle is switched on. After the vehicle is started, it goes out as soon as the driver's and the front passenger's seat belts have been fastened.

Function of the rear seat belt status display

The rear seat belt status display is only available for certain countries.

Ensure, both before and during the journey, that all vehicle occupants have their seat belts fastened correctly and are sitting properly.

Before starting the journey, ensure that the rear seating shown in the driver display corresponds to the rear seating installed in the vehicle. Only then can the safety-relevant systems of the rear seats function as intended, e.g. the seat belt tensioners.

WARNING
Risk of injury due to non-recognised rear seat

If an installed rear seat is not displayed or is not correctly displayed in the rear seat belt status indicator, the components of the restraint system may not function as intended in an accident.

- If the rear seating displayed does not correspond to the rear seating installed in the vehicle, no longer use the seats in 2nd and 3rd seat row.
- Have the vehicle checked immediately at a qualified specialist workshop.

In the driver display the rear seating is always shown in the direction of travel, even if rear seats are installed against the direction of travel. The installation position of the rear seat is relevant. Removed or non-recognised seats are not displayed.

If there is a discrepancy between the rear seating shown in the driver display and the rear seating installed in the vehicle, ensure that the rear seat is installed correctly (⟶ page 251).

Observe the display messages on the rear seating in the driver display (⟶ page 765).

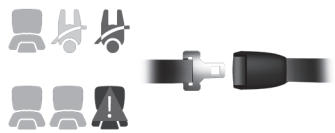

Status display on the driver display (example)

The colour of the symbol is intended to help you quickly identify the status of the rear seat belt.

The rear seat belt status display is a reminder that all vehicle occupants in the rear must wear their seat belts correctly.

If one of the rear seats is occupied when the vehicle is switched on and the seat belt tongue of the rear seat belt is not engaged in the seat belt buckle of the corresponding seat, the rear seat belt status display will appear.

POSSIBLE COLOUR OF THE SYMBOL:

- Grey: the rear seat is unoccupied.
- Green: the seat belt tongue of a rear seat belt is engaged in the seat belt buckle of the indicated seat.
- Red: the person in the rear seat has not fastened their seatbelt.

If a vehicle occupant unfastens a seat belt in the rear while the vehicle is motion, the rear seat belt status display appears again.

A warning tone may also sound.

MALFUNCTION IN THE REAR SEATING
In the rear seat belt status display the ⚠ symbol is shown. There is a malfunction.

In case of a malfunction of one of the seats in the 2nd or 3rd seat row, no longer use the seats in the 2nd and 3rd seat row.

Please also note the information on the display messages, in particular on the rear seating (→ page 765).

Check the correct installation (→ page 251) and the electrical connectors (→ page 238) of all rear seats.

Have the vehicle checked and repaired immediately at a qualified specialist workshop.

Function of the PASSENGER AIR BAG indicator lamps (front passenger airbag)

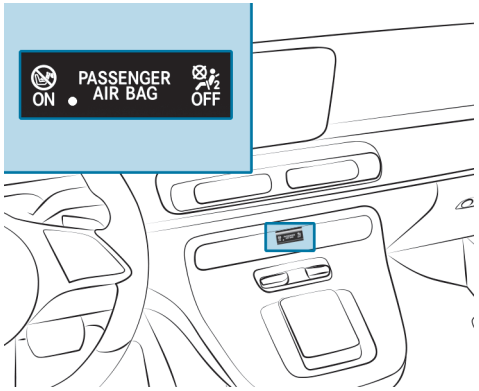

Vehicles without automatic front passenger airbag deactivation have a special sticker affixed to the side of the cockpit on the front passenger side (→ page 157). The PASSENGER AIR BAG ON and OFF indicator lamps have no function in this case and are not an indication of the automatic front passenger airbag deactivation.

On vehicles with automatic front passenger airbag deactivation, the PASSENGER AIR BAG indicator lamps show the status of the front passenger airbag.

If the front passenger seat is occupied or a child restraint system is fitted on the front passenger seat, you must ensure both before and during the journey that the status of the front passenger airbag is correct for the current situation.

> ⚠ **WARNING**
> Risk of potentially fatal injuries due to objects trapped under the front passenger seat
>
> Objects trapped under the front passenger seat may interfere with the function of the automatic front passenger airbag shutoff or damage the system.
>
> ► Do not stow any objects under the front passenger seat.
>
> ► When the front passenger seat is occupied, ensure that no objects have become trapped beneath the front passenger seat.

Self-test: if the vehicle is switched on, both the PASSENGER AIR BAG ON and OFF indicator lamps light up simultaneously for several seconds.

AFTER THE SELF-TEST YOU CAN DETERMINE THE STATUS OF THE FRONT PASSENGER AIRBAG AS FOLLOWS:

- **Front passenger airbag switched off:** PASSENGER AIR BAG OFF lit up steadily.
  The front passenger airbag will not be deployed in the event of an accident. If PASSENGER AIR BAG OFF lights up, no-one may use the front passenger seat.

If a rear-facing child restraint system is fitted on the front passenger seat, PASSENGER AIR BAG OFF must be lit up steadily.

- **Front passenger airbag switched on:** PASSENGER AIR BAG ON lights up for up to 60 seconds. Both indicator lamps PASSENGER AIR BAG ON and OFF are then off.

  The front passenger airbag may deploy during an accident. In this status of the front passenger airbag, a rear-facing child restraint system must not be fitted on the front passenger seat.

ⓘ If you are driving with a child in the vehicle, observe the information in the chapter "Children in the vehicle" (→ page 153).

⚠ **WARNING**
Risk of injury or death due to a disabled front passenger airbag

The front passenger airbag is disabled when the PASSENGER AIR BAG OFF indicator lamp is lit.

A person in the front passenger seat could then, for example, come into contact with the vehicle interior, especially if the person is sitting too close to the cockpit.

IF THE FRONT PASSENGER SEAT IS OCCUPIED, ALWAYS ENSURE THAT:

- the classification of the person in the front passenger seat is correct and the front passenger airbag is enabled or disabled in accordance with the person in the front passenger seat.
- the front passenger seat has been moved as far back as possible.
- the person is seated correctly.

▶ Both before and during the journey, ensure that the status of the front passenger airbag is correct.

MALFUNCTION OF THE AUTOMATIC FRONT PASSENGER AIRBAG DEACTIVATION

The PASSENGER AIR BAG OFF indicator lamp and the restraint system warning lamp light up simultaneously.

In this case no-one may use the front passenger seat and no child restraint system may be fitted on the front passenger seat.

Have the automatic front passenger airbag deactivation checked and repaired immediately at a qualified specialist workshop.

Switch front passenger airbag on or off

The automatic front passenger airbag shutoff can switch the front passenger airbag on or off depending on the situation.

This happens automatically via classification of the person or the child restraint system on the front passenger seat.

You cannot switch the front passenger airbag on or off manually.

Information on the child restraint system

When fitting a child restraint system, observe the notes in "Children in the vehicle" (⟶ page 153).

NOTES ON THE CHILD RESTRAINT SYSTEM ON THE FRONT PASSENGER SEAT

WARNING
Risk of injury or fatal injuries if the front passenger airbag is enabled

If the front passenger airbag is enabled, a child on the front passenger seat may be struck by the front passenger airbag during an accident.

- NEVER use a rearward facing child restraint system on a seat protected by an ACTIVE AIRBAG in front of it, DEATH or SERIOUS INJURY to the CHILD can occur.

Also pay particular attention to the notes on rearward-facing or forward-facing child restraint systems on the front passenger seat (⟶ page 158).

Information on the automatic functions of the restraint system

Function of automatic front passenger airbag deactivation

A PERSON ON THE FRONT PASSENGER SEAT MUST OBSERVE THE FOLLOWING INFORMATION:

- Sit correctly (→ page 131).
- Fasten the seat belt correctly (→ page 132).

The automatic front passenger airbag deactivation can switch the front passenger airbag on or off depending on the situation.

ALSO OBSERVE THE FOLLOWING NOTES:

- Status of the front passenger airbag, see "Function of the indicator lamps PASSENGER AIR BAG" (→ page 137)
- When fitting a child restraint system to the front passenger seat, observe the vehicle-specific information (→ page 158).

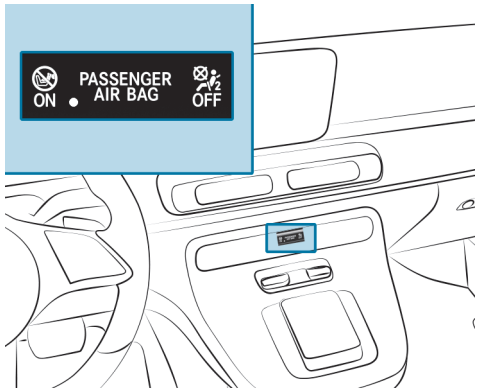

STATUS OF THE FRONT PASSENGER AIRBAG DEPENDING ON THE SEAT OCCUPANCY:

- **Front passenger airbag switched off:** PASSENGER AIR BAG OFF lit up steadily.

  The front passenger airbag will not be deployed in the event of an accident. If PASSENGER AIR BAG OFF lights up, no-one may use the front passenger seat.
- **Front passenger airbag switched on:** PASSENGER AIR BAG ON lights up for up to 60 seconds. Both indicator lamps PASSENGER AIR BAG ON and OFF are then off.

  The front passenger airbag may deploy during an accident. Observe the information on the correct seat position (→ page 131).

  In this status of the front passenger airbag, a rear-facing child restraint system must not be fitted on the front passenger seat.

SYSTEM LIMITS

THE FRONT PASSENGER AIRBAG MAY BE DISABLED BY MISTAKE, E.G. IN THE FOLLOWING SITUATIONS:

- The front passenger transfers their weight by supporting themselves on a vehicle armrest.
- The front passenger sits in such a way that their weight is not transferred to the seat surface.

NOTE
Deployment of components of the restraint system when the front passenger seat is unoccupied

IN AN ACCIDENT, THE COMPONENTS OF THE RESTRAINT SYSTEM MAY DEPLOY UNNECESSARILY ON THE FRONT PASSENGER SIDE IF:

- There are heavy objects on the front passenger seat.
- The seat belt tongue is engaged in the seat belt buckle of the front passenger seat and the front passenger seat is unoccupied.

► Stow objects in a suitable place.

► Only one person should use each seat belt at any one time.

Function of PRE-SAFE® (anticipatory occupant protection)

PRE-SAFE® can detect certain hazardous situations and take pre-emptive measures to protect the vehicle occupants.

PRE-SAFE® CAN IMPLEMENT THE FOLLOWING MEASURES INDEPENDENTLY OF EACH OTHER:

- Tightening the seat belts on the driver's seat and front passenger seat.
- Closing the side windows.
- **Vehicles with a sliding sunroof:** closing the sliding sunroof.
- **Vehicles with memory function:** adjusting the front passenger seat to a more favourable seat position.
- **PRE-SAFE® Sound:** Can activate your hearing's own protection mechanism through a brief noise signal when the multimedia system is switched on.

NOTE
Damage caused by objects in the footwell or behind the seat

The automatic adjustment of the seat position may result in damage to the seat and/or the object.

► Stow objects in a suitable place.

Reversing the PRE-SAFE® system measures

If an accident did not occur, the pre-emptive measures that were taken are reversed.

You will need to make certain adjustments yourself.

► If the seat belt pre-tensioning is not reduced, move the seat backrest back slightly.
The locking mechanism releases.

Seat belt adjustment function

Vehicles with PRE-SAFE®: after a front seat belt has been fastened, the automatic seat belt adjustment may apply a certain tightening force by gently pulling it taut from the shoulder. Do not hold onto the seat belt while it is adjusting.

Activating or deactivating the seat belt adjustment using the multimedia system (→ page 142)

Activating or deactivating the seat belt adjustment using the multimedia system

Multimedia system:

Settings ▶▶ Vehicle ▶▶ Occupant protection

▶ Activate or deactivate Seat belt adjustment.

Overview of the automatic measures after an accident

DEPENDING ON THE TYPE AND SEVERITY OF THE ACCIDENT, AND DEPENDING ON THE VEHICLE'S EQUIPMENT, THE FOLLOWING MEASURES CAN BE IMPLEMENTED, FOR EXAMPLE:

- automatic braking (post-collision brake)
- activating the hazard warning lights
- triggering an automatic emergency call (→ page 72)
- switching off the engine

  To restart the vehicle, switch the vehicle off and on again (→ page 349). Depending on the type and severity of the accident, it may possible that the vehicle can no longer be started.
- switching off the fuel supply
- unlocking the vehicle doors
- lowering the front side windows
- switching on the interior lighting

Function of the post-collision brake after an accident

Depending on the accident situation, the post-collision brake can minimise the severity of a further collision or even avoid it.

If an accident is detected, the post-collision brake can implement automatic braking. When the vehicle has come to a standstill, the electric parking brake is automatically applied.

AUTOMATIC BRAKING CAN BE CANCELLED USING ONE OF THE FOLLOWING ACTIONS:

- braking more strongly than automatic braking
- fully depressing the accelerator pedal with force

Purpose and function of the restraint system

Overview of deployment situations (restraint system)

MAKE SURE THAT THE FOLLOWING PREREQUISITES IN PARTICULAR HAVE BEEN MET, SO THAT THE COMPONENTS OF THE RESTRAINT SYSTEM ARE ABLE TO PROVIDE THE INTENDED LEVEL OF PROTECTION:

- Sit correctly (⟶ page 131).
- Fasten the seat belt correctly (⟶ page 132).
  - Function of the seat belt warning lamp (⟶ page 135).
  - Function of the rear seat belt status display (⟶ page 135).
- The restraint system warning lamp is not on after the self-test (⟶ page 135).
- The indicator lamps PASSENGER AIR BAG display the correct status of the front passenger airbag (⟶ page 137).

DEPENDING ON THE DETECTED DEPLOYMENT SITUATION, THE COMPONENTS OF THE RESTRAINT SYSTEM CAN BE ACTIVATED OR DEPLOYED INDEPENDENTLY OF ONE ANOTHER:

- Seat belt tensioner: frontal impact, rear impact, side impact[1], overturning[1], rollover[1]
- Driver's airbag, front passenger airbag: frontal impact
- Side airbag: side impact
- Centre airbag: side impact
- Window airbag: side impact, overturning, rollover, frontal impact

[1] Only when the vehicle is fitted with a side airbag or window airbag.

The installation location of an airbag is identified by the AIRBAG symbol (⟶ page 151).

Observe the information on the function of the restraint system (⟶ page 143).

Information on how the restraint system works

How the restraint system functions depends on the severity of the impact detected and the apparent type of accident.

For more information about types of accidents, see "Overview of deployment situations" (⟶ page 143).

The activation thresholds for the components of the restraint system are determined based on the evaluation of the sensor values measured at various points in the vehicle. This process is anticipatory in nature. The triggering/deployment of the components of the restraint system must take place in good time at the start of the collision.

Factors which can only be seen and measured after a collision has occurred do not play a decisive role in the deployment of an airbag, nor do they provide an indication of airbag deployment.

The vehicle may be deformed significantly without an airbag being deployed. This is the case if only parts which are relatively easily deformed are affected and the rate of vehicle deceleration is not high. Conversely, an airbag may be deployed even though the vehicle suffers only minor deformation. If very rigid vehicle parts, such as longitudinal members, are hit, the vehicle deceleration may be high enough for this to happen.

Depending on the apparent type of accident and the detected deployment situation, seat belt tensioners and/or airbags supplement the protection offered by a correctly worn seat belt.

When enabled, an airbag can provide additional protection for the respective vehicle occupant.

POSSIBLE PROTECTION PER AIRBAG:

- Driver's airbag, front passenger airbag: head and thorax
- Window airbag: head
- Centre airbag: head and thorax
- Side airbag: thorax and pelvis

However, no system available today can completely eliminate injuries and fatalities in every accident situation. In particular, the seat belt and airbag generally do not protect against objects penetrating the vehicle from the outside. It is also not possible to completely rule out the risk of injury caused by the airbag deploying.

Mercedes-Benz recommends that you have the vehicle towed to a qualified specialist workshop after an accident. Take this into account, particularly if a seat belt tensioner was triggered or an airbag deployed.

IF THE SEAT BELT TENSIONERS ARE TRIGGERED OR AN AIRBAG IS DEPLOYED, YOU WILL HEAR A BANG, AND A SMALL AMOUNT OF POWDER MAY ALSO BE RELEASED:

- The bang will not generally affect your hearing.
- In general, the powder released is not hazardous to health but may cause short-term breathing difficulties to persons suffering from asthma or other pulmonary conditions.

  Provided it is safe to do so, leave the vehicle immediately or open the window in order to prevent breathing difficulties.

Information on the limited protection provided by the restraint system

RISK DUE TO THE INCORRECT BEHAVIOUR OF VEHICLE OCCUPANTS

EVERY VEHICLE OCCUPANT MUST MAKE SURE OF THE FOLLOWING IN PARTICULAR:

- They observe the information on the correct seat position (→ page 131).
- There are no heavy, pointed, sharp-edged or fragile objects in the pockets of their clothing. Stow such objects in a suitable place.

WARNING
Risk of injury or death due to incorrect seat position

The seat belt will not offer the intended level of protection if you have not moved the seat backrest to an almost vertical position.

In particular, you may slip under the seatbelt and injure yourself.

- Adjust the seat properly before beginning your journey.
- Always ensure that the seat backrest is in an almost vertical position and that the shoulder section of your seat belt is routed across the centre of your shoulder.

WARNING
Risk of injury or death due to unsuitable seats with seat-integrated seat belts

If an installed rear seat is not approved for your vehicle, the restraint system components may not function as intended in the event of an accident. This may be the case, for example, when installing a seat from another vehicle.

- Install only rear seats that were delivered with the vehicle from the factory or which have been approved for your vehicle by Mercedes-Benz.

The electrical connector of the rear seats must be inserted into the floor socket provided for this purpose.
(→ page 238)Check the correct installation and the electrical connectors of all rear seats.

RISK DUE TO OBJECTS IN THE VEHICLE INTERIOR

EVERY VEHICLE OCCUPANT MUST MAKE SURE OF THE FOLLOWING IN PARTICULAR:

- They observe the information on the correct seat position (→ page 131).
- There are no objects between the seat, door and door pillar (B-pillar).
- There are no hard objects, e.g. coat hangers, hanging on the grab handles or coat hooks.
- There are no heavy, pointed, sharp-edged or fragile objects in the pockets of their clothing. Stow such objects in a suitable place.

To secure objects, luggage or cargo, follow the instructions for loading the vehicle (→ page 619).

WARNING
Risk of injury or death due to blocked seat belt buckle or seat belt anchorage

Objects next to the front seat that block the seat belt buckle or the moving seat belt anchorage on the front seat impair the function of the seat belt tensioners.

- Before starting the journey, make sure that there are no objects around the seat belt buckle or between the front seat and door.

WARNING
Risk of injury from objects in the deployment area of an airbag

Objects in the deployment area of an airbag can hinder or prevent the correct deployment of the airbag.

The airbag may then deploy in an uncontrolled manner and may even cause additional injuries to the vehicle occupants by deploying. This may be the case in particular if the airbag is integrated into the seat.

- ► Always stow and secure objects correctly.
- ► Before commencing your journey, make sure that no objects are stowed in the deployment area of an airbag.

The installation location of an airbag is identified by the AIRBAG symbol (⟶ page 151).

OBSERVE THE FOLLOWING NOTES:

- Notes on loading the vehicle (⟶ page 619)
- Information on the centre airbag in the driver's seat backrest (⟶ page 151)

RISK DUE TO FITTING ACCESSORIES
Do not attach accessories such as mobile navigation devices, mobile phones or cup holders within the deployment area of an airbag, e.g. by the cockpit, by the door, by the side window or by the side trim.

In addition, no connecting cables, tensioning straps or retaining straps must be routed or attached to the vehicle within the deployment area of an airbag. Always comply with the accessory manufacturer's installation instructions and, in particular, the notes on suitable places for installation.

WARNING
Risk of injury or death due to unsuitable protective covers

Due to unsuitable protective covers, the airbags cannot protect vehicle occupants as they are designed to do.

- ► You should only use protective covers that have been approved for the corresponding seat by Mercedes-Benz.

In addition, the function of the automatic front passenger airbag shutoff could be restricted due to an unsuitable protective cover. If the front passenger seat is occupied, ensure that the PASSENGER AIR BAG indicator lamps display the correct status of the front passenger airbag (⟶ page 137).

RISK DUE TO PETS IN THE VEHICLE INTERIOR

WARNING
Risk of accident and injury due to animals left unsecured or unattended in the vehicle

If you leave animals in the vehicle unattended or unsecured, they could press buttons or switches, for instance.

AN ANIMAL MAY:

- activate vehicle equipment and become trapped, for example
- switch systems on or off and endanger other road users

Unsecured animals may be thrown about the vehicle in the event of an accident, or sudden steering and braking manoeuvres, and injure vehicle occupants.

► Never leave animals unattended in the vehicle.

► Always correctly secure animals while driving, e.g. using a suitable animal carrier.

RISK DUE TO MODIFICATION, DAMAGE OR WEAR TO THE COMPONENTS OF THE RESTRAINT SYSTEM

WARNING
Risk of injury or death due to modifications to the restraint system

Vehicle occupants may no longer be protected as intended if alterations are made to the restraint system.

► Never alter the parts of the restraint system.

► Never tamper with the wiring or any electronic component parts or their software.

If it is necessary to adjust the vehicle to accommodate a person with physical disabilities, contact a qualified specialist workshop.

Mercedes-Benz recommends that you only use driving aids which have been approved specifically for your vehicle by Mercedes-Benz.

WARNING
Risk of injury or death due to damaged or modified seat belt system

THE SEAT BELT SYSTEM CANNOT PROVIDE PROTECTION IN THE FOLLOWING SITUATIONS:

- the seat belt is damaged, has been modified, is extremely dirty, bleached or dyed
- the seat belt buckle is damaged or extremely dirty
- modifications have been made to the seat belt tensioner, seat belt anchorage or seat belt retractor

Seat belts may sustain non-visible damage in an accident, for example, due to glass splinters.

Modified or damaged seat belts could tear or fail in the event of an accident, for example.

Modified seat belt tensioners could accidentally trigger or fail to function as intended.

► Never modify the seat belt system, for example the seat belt, seat belt buckle, seat belt tensioner, seat belt anchorage and seat belt retractor.

► Make sure the seat belts are undamaged, not worn and clean.

► Always have the seat belt system checked immediately after an accident at a qualified specialist workshop.

Mercedes-Benz recommends that you use seat belts which have been approved for your vehicle by Mercedes-Benz.

WARNING
Risk of injury due to modifications to the cover of an airbag

If you modify the cover of an airbag or affix objects such as stickers to it, the airbag can no longer function as intended.

► Never modify the cover of an airbag.

► Do not attach any objects to the cover.

The installation location of an airbag is identified by the AIRBAG symbol (⟶ page 151).

WARNING
Risk of injury due to malfunctioning sensors in the door

The function of the airbags can be impaired due to modifications or incorrect work performed on the doors or door trim, or if the doors are damaged.

► Never modify the doors or parts of the doors.

► Always have work on the doors or door trim carried out at a qualified specialist workshop.

RISK DUE TO COMPONENTS OF THE RESTRAINT SYSTEM WHICH HAVE ALREADY BEEN DEPLOYED
Mercedes-Benz recommends that you have the vehicle towed to a qualified specialist workshop after an accident.

WARNING
Risk of burns from hot airbag components

The airbag parts are hot after an airbag has been deployed.

- Do not touch the airbag parts.
- Have a deployed airbag replaced at a qualified specialist workshop as soon as possible.

WARNING
Risk of injury due to deployed airbag

A deployed airbag no longer offers any protection.

- Have the vehicle towed to a qualified specialist workshop in order to have the deployed airbag replaced.

Have deployed airbags replaced immediately.

WARNING
Risk of injury or death from deployed pyrotechnic seat belt tensioners

Pyrotechnic seat belt tensioners that have been deployed are no longer operational and are unable to perform their intended protective function.

- Therefore, have deployed pyrotechnic seat belt tensioners immediately replaced at a qualified specialist workshop.

Seat belts

Releasing the seat belts

- Press the release button in the seat belt buckle and guide the seat belt back with the seat belt tongue.

NOTE
Damage caused by trapping the seat belt

If an unused seat belt is not fully retracted, it may become trapped in the door or in the seat mechanism.

- Always ensure that an unused seat belt is fully retracted.

Airbags

Overview of airbags

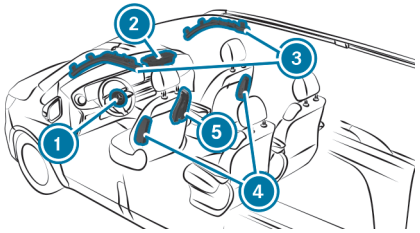

Example: vehicles with window airbag above front door

1. Driver's airbag
2. Front passenger airbag
3. Window airbag
4. Side airbag
5. Centre airbag

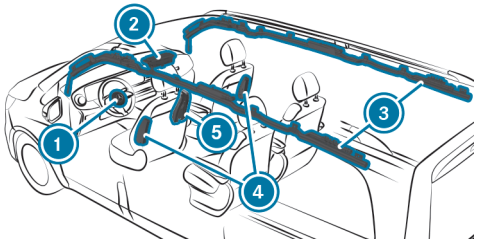

Example: vehicles with window airbag for all rows of seats

1. Driver's airbag
2. Front passenger airbag
3. Window airbag
4. Side airbag
5. Centre airbag

The installation location of an airbag is identified by the AIRBAG symbol.

Observe the information in "Overview of deployment situations" (→ page 143).

Information on the centre airbag in the driver's seat backrest

When triggered, the centre airbag deploys between the front seats. Do not stow any objects in the deployment area of the centre airbag.

Observe the notes on loading the vehicle (→ page 619).

Children in the vehicle

This interactive PDF works like a website – tap or click a button to jump straight to where you want to go.
You can return here at any time via the navigation bar at the top left.

Brief overview of most important points
Important safety notes
Suitable child restraint systems for the transport of children
Suitable seats for attaching child restraint systems
Securing the child restraint system
Child safety locks
Passive occupant presence reminder

Brief overview of most important points

Safely carrying children in the vehicle

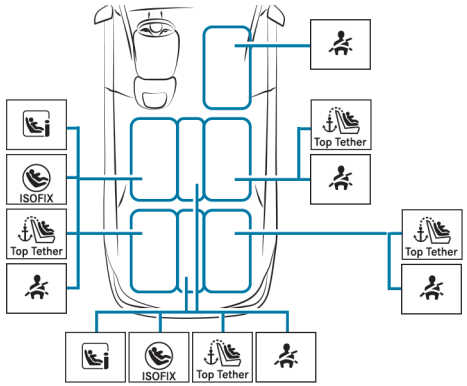

ALWAYS OBSERVE THE FOLLOWING WHEN CARRYING CHILDREN:

- Never leave children unattended in the vehicle (→ page 155).
- Properly secure children less than 1.50 m in height or under 12 years of age in the appropriate seat (s. illustration) with a suitable and approved child restraint system (→ page 161), and secure infants in a rear-facing child restraint system.
- Observe the child restraint system manufacturer's installation instructions.

REAR SEATS AND REAR BENCH SEAT
PREFERRED ATTACHMENT SYSTEM:

ISOFIX/LATCH child seat anchor (→ page 166)

or i-Size mounting bracket (→ page 171)

and also attach Top Tether if available (→ page 172).

ALTERNATIVE ATTACHMENT SYSTEM:

Seat belt on vehicle seat (→ page 173)

The following child restraint systems in the Universal category are approved: U, UF, i-U, IUF. Please see the other alternatives for use (→ page 168).

FRONT PASSENGER SEAT
ATTACHMENT SYSTEM:

Seat belt on vehicle seat (→ page 173)

The following child restraint systems within the Universal category are approved: U(*), UF. Please see the other alternatives for use (→ page 168).

(*) rear-facing child restraint systems only in combination with automatic air-bag shutoff

Important safety notes

Basic information

BE DILIGENT
Bear in mind that negligence when securing a child in the child restraint system can have serious consequences. Always be diligent and secure a child carefully before each journey.

Infants and children must never travel sitting on the lap of a vehicle occupant.

TO IMPROVE PROTECTION FOR CHILDREN UNDER 12 YEARS OF AGE OR LESS THAN 1.50 M IN HEIGHT, MERCEDES-BENZ RECOMMENDS THAT YOU MAKE SURE YOU OBSERVE THE FOLLOWING INFORMATION:

- Always secure the child in a child restraint system suitable for this Mercedes-Benz vehicle.
- The child restraint system must be appropriate to the age, weight and size of the child.
- The vehicle seat must be suitable for the child restraint system to be fitted:
  - ISOFIX/LATCH mounting bracket (⟶ page 166)
  - i-Size mounting bracket
  - Securing with the seat belt of the vehicle seat (⟶ page 168)

Accident statistics show that children secured on the rear seats are generally safer than children secured on the front seats. For this reason, Mercedes-Benz strongly advises that you fit a child restraint system to a rear seat if there are rear seats.

THE GENERIC TERM CHILD RESTRAINT SYSTEM

THE GENERIC TERM CHILD RESTRAINT SYSTEM IS USED IN THESE OPERATING INSTRUCTIONS. A CHILD RESTRAINT SYSTEM CAN BE E.G.:

- an infant carrier
- a rear-facing child seat
- a front-facing child seat
- a child booster seat – Mercedes-Benz recommends using a child booster seat **with** a seat backrest and seat belt guide.

OBSERVE LAWS AND REGULATIONS
Always observe the legal requirements when using a child restraint system in the vehicle.

Make sure that the child restraint system is approved in accordance with the valid test specifications and guidelines. You can obtain further information at a qualified specialist workshop. Mercedes-Benz recommends that you use a Mercedes-Benz Service Centre for this purpose.

ATTACHMENT SYSTEMS FOR CHILD RESTRAINT SYSTEMS IN THE VEHICLE

ONLY USE THE FOLLOWING ATTACHMENT SYSTEMS FOR CHILD RESTRAINT SYSTEMS:

- the ISOFIX/LATCH or i-Size mounting bracket
- the seat belt system of the vehicle
- the Top Tether anchorages

Easy attachment to the ISOFIX/LATCH or i-Size mounting bracket on the vehicle can reduce the risk of fitting the child restraint system incorrectly.

When securing a child with the integrated seat belt of the ISOFIX/LATCH or i-Size child restraint system, always comply with the permissible gross weight for the child and child restraint system (⟶ page 171).

Important warning notices

ALWAYS SECURE A CHILD RESTRAINT SYSTEM CORRECTLY

> ⚠ **WARNING**
> Risk of injury or death due to incorrect installation of the child restraint system
>
> The child can then not be protected or restrained as intended.
>
> ► Be sure to comply with the manufacturer's installation instructions for the child restraint system and its correct use.
>
> ► Make sure that the entire base of the child restraint system always rests on the sitting surface of the seat.
>
> ► Never place objects (e.g. cushions) under or behind the child restraint system.
>
> ► Use child restraint systems only with the original cover designed for them.
>
> ► Always replace damaged covers with genuine covers.

- Always observe the vehicle-specific information.
  - Fitting an ISOFIX or i-Size child restraint system on the rear seat (⟶ page 171).
  - Securing the child restraint system with the seat belt (⟶ page 173).
- Observe the warning labels in the vehicle interior and on the child restraint system.

> ⚠ **WARNING**
> Risk of injury or death due to unsecured child restraint systems in the vehicle
>
> If the child restraint system is incorrectly fitted or not secured, it can become detached.
>
> The child cannot then be protected or restrained as intended.
>
> The unused child restraint system can be become detached and strike vehicle occupants.
>
> ► Always comply with the manufacturer's installation instructions for the child restraint system and its correct use.
>
> ► Always fit child restraint systems correctly, even if they are transported unused in the vehicle.

DO NOT MODIFY THE CHILD RESTRAINT SYSTEM

WARNING
Risk of injury due to modifications to the child restraint system

The child restraint system can no longer function properly. This poses an increased risk of injury.

- Never modify a child restraint system.
- Only affix accessories which have been specially approved for this child restraint system by the child restraint system's manufacturer.

ONLY USE CHILD RESTRAINT SYSTEMS WHICH ARE IN PROPER WORKING CONDITION

WARNING
Risk of injury or death caused by the use of damaged child restraint systems

Child restraint systems or their retaining systems that have been subjected to stress in an accident may not be able to perform their intended protective function.

It may be the case that the child cannot be properly restrained.

- Always immediately replace child restraint systems that have been damaged or involved in an accident.
- Have the securing systems for the child restraint systems checked at a qualified specialist workshop before installing a child restraint system again.

AVOID DIRECT SUNLIGHT

WARNING
Risk of burns when the child seat is exposed to direct sunlight

If the child restraint system is exposed to direct sunlight or heat, parts could heat up.

Children could suffer burns from these parts, particularly on metallic parts of the child restraint system.

- Always make sure that the child restraint system is not exposed to direct sunlight.
- Protect the child restraint system with a blanket, for example.
- If the child restraint system has been exposed to direct sunlight, allow it to cool before securing a child into it.
- Never leave children unattended in the vehicle.

OBSERVE WHEN STOPPING OR PARKING

WARNING
Risk of fatalities due to exposure to extreme heat- or cold in the vehicle

If persons – and in particular children – are exposed to solar radiation, or the effects of heat or cold for prolonged periods of time, there is a risk of sustaining injuries or even fatalities!

- Never leave people – especially children – unattended in the vehicle.

WARNING
Accident– and risk of injury with unsupervised children in the vehicle

IF YOU LEAVE CHILDREN UNATTENDED IN THE VEHICLE, THEY CAN IN PARTICULAR

- Open doors and thereby endanger other persons or road users.
- get out of the car and are hit by traffic.
- Operate vehicle equipment and become trapped, forexample.

IN ADDITION, THE CHILDREN COULD ALSO SET THE VEHICLE IN MOTION, FOR EXAMPLEBY:

- releasing the parking brake.
- change the gearbox setting.
- start the vehicle.

▶ Never leave children unattended in the vehicle.

▶ When leaving the vehicle, always take the SmartKey with you and lock the vehicle.

▶ Keep the key out of reach of children.

Overview of warning stickers in the vehicle

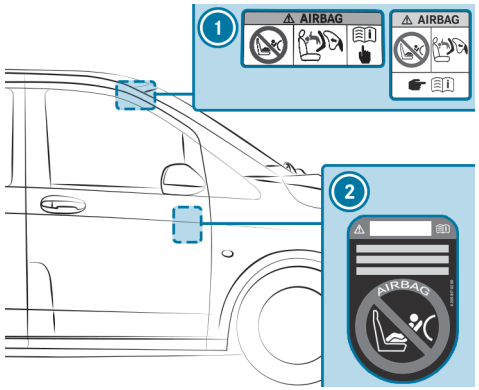

1. Front passenger airbag warning (on the front passenger sun visor) (⟶ page 158)
2. Vehicles without automatic front passenger airbag shutoff (visible when front passenger door is open) (⟶ page 160)

Notes on rear-facing and front-facing child restraint systems on the front passenger seat

WARNING
Risk of injury or death when using a child restraint system while the co-driver airbag is enabled

If you secure a child in a child restraint system on the co-driver seat and the PASSENGER AIR BAG OFF indicator lamp is off, the co-driver airbag can deploy in the event of an accident.

The child could be struck by the airbag.

► Always ensure that the co-driver airbag is disabled. The PASSENGER AIR BAG OFF indicator lamp must be lit.

NEVER use a rearward facing child restraint on a seat protected by an ENABLED AIRBAG in front of it, DEATH or SERIOUS INJURY to the CHILD may occur.

Observe the specific instructions for the rear-facing and front-facing child restraint systems (→ page 170).

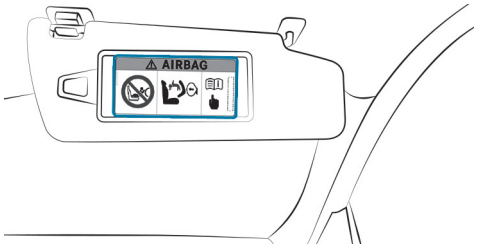

Warning notice on the front passenger sun visor

ALWAYS OBSERVE THE STATUS OF THE FRONT PASSENGER AIRBAG ON THE PASSENGER AIR BAG OFF INDICATOR LAMP

- If it is absolutely necessary to fit a child restraint system on the front passenger seat, always observe the information on automatic front passenger airbag shutoff (→ page 139).
- When using a rear-facing child restraint system on the front passenger seat, the front passenger airbag must always be disabled. It is only disabled if the PASSENGER AIR BAG OFF indicator lamp is continuously lit (→ page 137).
- If the PASSENGER AIR BAG OFF indicator lamp is off, the front passenger airbag is enabled. The front passenger airbag may deploy during an accident.

Information on the automatic front passenger airbag shutoff

If the co-driver seat is occupied, ensure, both before and during the journey, that the status of the front passenger airbag is correct for the current situation.

WARNING
Risk of injury or death due to objects between the seat surface and the child restraint system

Objects between the seat surface and the child restraint system could affect the function of the automatic co-driver airbag shutoff.

- Do not place any objects between the seat surface and the child restraint system.
- Make sure that the entire base of the child restraint system is always resting on the seat surface of the co-driver seat.
- The backrest of the forward-facing child restraint system must, as far as possible, be resting on the seat backrest of the co-driver seat.
- It is essential to comply with the child restraint system manufacturer's installation instructions.

When fitting a child restraint system to the co-driver seat, observe the vehicle-specific information (⟶ page 158).

REAR-FACING CHILD RESTRAINT SYSTEM ON THE CO-DRIVER SEAT
If a rear-facing child restraint system is mounted on the co-driver seat, the front passenger airbag must be switched off. The indicator lamp PASSENGER AIR BAG OFF must light up constantly (⟶ page 137).

WARNING
Risk of injury or death from using a rearward-facing child restraint system when the front passenger airbag is enabled

If you secure a child in a rearward-facing child restraint system on the co-driver seat and the PASSENGER AIR BAG OFF indicator lamp is off, the front passenger airbag can deploy in the event of an accident.

The airbag could hit the child.

- Always make sure the front passenger airbag is disabled. The PASSENGER AIR BAG OFF indicator lamp must be lit.
- NEVER use a rearward-facing child restraint system on a seat with an ENABLED FRONT AIRBAG. This can result in the DEATH or SERIOUS INJURY of the CHILD.

Depending on the child restraint system and the physique of the child, the front passenger airbag is switched on. Indicator lamp PASSENGER AIR BAG OFF does not light up.
The front passenger airbag may deploy during an accident. In this status of the front passenger airbag, a rear-facing child restraint system must not be fitted on the co-driver seat.
Instead, fit the rear-facing child restraint system on a suitable rear seat.

FRONT-FACING CHILD RESTRAINT SYSTEM ON THE CO-DRIVER SEAT
If a front-facing child restraint system is fitted on the co-driver seat, the front passenger airbag may be switched on or off. The status of the front passenger airbag depends on the child restraint system and the physique of the child.

The PASSENGER AIR BAG OFF indicator lamp is either lit up all the time or it does not light up (⟶ page 137). Always observe the following information.

WARNING
Risk of injury or death due to incorrect positioning of the child restraint system

IF YOU SECURE A CHILD IN A FORWARD-FACING CHILD RESTRAINT SYSTEM ON THE CO-DRIVER SEAT AND YOU POSITION THE CO-DRIVER SEAT TOO CLOSE TO THE DASHBOARD, IN THE EVENT OF AN ACCIDENT, THE CHILD COULD:

- come into contact with the vehicle's interior if the PASSENGER AIR BAG OFF indicator lamp is lit, for example
- be struck by the airbag if the PASSENGER AIR BAG OFF indicator lamp is off

▶ Always move the co-driver seat as far back as possible. In doing so, always make sure that the shoulder belt strap is correctly routed from the seat belt outlet of the vehicle to the shoulder belt guide on the child restraint system. The shoulder belt strap must be routed forwards and downwards from the seat belt outlet. If necessary, adjust the seat belt outlet and the co-driver seat accordingly.

▶ Always comply with the child restraint system manufacturer's installation instructions.

Notes on vehicles without automatic front passenger airbag shutoff

Vehicles without automatic front passenger airbag shutoff have a special sticker affixed to the side of the cockpit on the front passenger side (⟶ page 157).

BE SURE TO OBSERVE THE FOLLOWING NOTES:

- Never fit a rear-facing child restraint system on the front passenger seat.
- Always fit a rear-facing child restraint system on a suitable rear seat
- Notes on rear-facing and front-facing child restraint systems on the front passenger seat (⟶ page 158)

Suitable child restraint systems for the transport of children

Information on the advantage of a rear-facing child restraint system

Only transport a baby in a suitable rear-facing child restraint system. It is also preferable to transport a small child in a suitable rear-facing child restraint system. In this case, the child sits in the opposite direction to the direction of travel and faces to the rear.

Babies and small children have comparatively weak neck muscles in relation to the size and weight of their head. The risk of injury to the cervical spine during an accident can be reduced in a rear-facing child restraint system.

Approval categories for child restraint systems

ONLY USE APPROVED CHILD RESTRAINT SYSTEMS

ONLY CHILD RESTRAINT SYSTEMS WITH THE FOLLOWING UNECE STANDARDS ARE APPROVED FOR USE IN THE VEHICLE:

- UN-R44
- UN-R129 (i-Size child restraint systems)

IDENTIFICATION ON THE CHILD RESTRAINT SYSTEM

Information pertaining to the approval category, weight category and approval number, forexample, is provided on the approval label on the child restraint system.

This may include additional information suchas the ISOFIX size category, depending on the approval category of the child restraint system.

Approval categories under UN-R44

Example of an approval label

- **Universal:** child restraint systems in the "Universal" category are approved for installation in vehicles. They can be used in seats marked U, UF or IUF, according to the overviews of the suitability of seats for securing child restraint systems.

  The IUF label refers to ISOFIX/LATCH child restraint systems in the "Universal" category. These child restraint systems must also be secured using a top tether or support points.
- **Semi-Universal:** child restraint systems in the "Semi-Universal" category may only be used if the vehicle and vehicle seat are listed in the child restraint system manufacturer's vehicle model list.

- **Vehicle-specific:** child restraint systems in the "Vehicle-specific" category may only be used if the vehicle and vehicle seat are listed in the child restraint system manufacturer's vehicle model list.

APPROVAL CATEGORY UNDER UN-R129

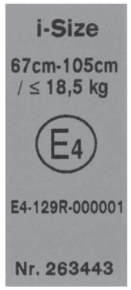

Example of an approval label

- **i-Size:** child restraint systems in the "i-Size" category are approved for installation in vehicles with i-Size mounting brackets. They can be used on seats marked with i-U according to the overviews of the suitability of seats for securing child restraint systems.

  The i-U label refers to i-Size child restraint systems in the "Universal" category. These child restraint systems must also be secured using a top tether or support points.

PLEASE ENSURE SUITABILITY OF THE VEHICLE SEATS

DEPENDING ON THE APPROVAL CATEGORY, THERE ARE FORWARD-FACING AND/OR REARWARD-FACING CHILD RESTRAINT SYSTEMS. THEIR USE MAY BE RESTRICTED FOR CERTAIN VEHICLE SEATS.

- Suitability of seats for attaching ISOFIX/LATCH child restraint systems (⟶ page 166)
- Suitability of seats for attaching i-Size child restraint systems (⟶ page 167).
- Suitability of seats for attaching belt-secured child restraint systems (⟶ page 168)

Overview of recommended child restraint systems

ⓘ Further information on the correct child restraint system can be obtained at a qualified specialist workshop. Mercedes-Benz recommends that you use a Mercedes-Benz Service Centre for this purpose.

SECURING WITH ISOFIX

WEIGHT CATEGORY 0+ (UP TO 13 KG AND UP TO APPROX. 15 MONTHS)

Type[1]	BABY SAFE plus (including base)
Size categories	E
Approval	E1 04 301 146
Order number[2]	B6 6 86 8224
1 Manufacturer: Britax Römer	2 With colour code 9H95

WEIGHT CATEGORY I (9 TO 18 KG AND FROM APPROXIMATELY 9 MONTHS TO 4 YEARS)

Type[1]	DUO plus
Size categories	B1
Approval	E1 04 301 133
Order number[2]	A 000 970 43 02
1 Manufacturer: Britax Römer	2 With colour code 9H95

SECURING WITH I-SIZE (R129 CHILD RESTRAINT SYSTEMS)

WEIGHT UP TO 13 KG, HEIGHT FROM 40 TO 83 CM, AND AGED UP TO APPROXIMATELY 15 MONTHS

Type[1]	Baby Safe 3 i-Size
Size categories	R2
Approval	E1*129R03/04*0060*02
Order number	A 000 970 68 02
Order number FlexBase iSense	A 000 970 73 02
1 Manufacturer: Britax Römer	

WEIGHT UP TO 18 KG, HEIGHT FROM 61 TO 105 CM, AND AGED 3 MONTHS TO 4 YEARS

Type[1]	Dualfix 3 i-Size
Size categories	F2X/R2
Approval	E1*129R03/04*0060*02
Order number	A000 970 93 02
Order number FlexBase iSense	A000 970 73 02
1 Manufacturer: Britax Römer	

WEIGHT 15 TO 36 KG, SIZE 100 TO 150 CM AND AGE FROM APPROX. 3.5 TO 12 YEARS (KIDFIX M I-SIZE)

Type[1]	KIDFIX M i-Size
Size categories	B2
Approval	E1*129R03/04*0061*02
Order number	A 000 970 89 02
1 Manufacturer: Britax Römer	

WEIGHT 15 TO 36 KG, SIZE 100 TO 150 CM AND AGE FROM APPROX. 3.5 TO 12 YEARS (AMG KIDFIX M I-SIZE)

Type[1]	AMG KIDFIX M i-Size
Size categories	B2
Approval	E1*129R03/04*0061*02
Order number	A 000 970 91 02
1 Manufacturer: Britax Römer	

SECURING WITH THE SEAT BELT ON THE VEHICLE SEAT

WEIGHT CATEGORY 0 (UP TO 10 KG AND APPROXIMATELY 6 MONTHS) AND WEIGHT CATEGORY 0+ (UP TO 13 KG AND APPROXIMATELY 15 MONTHS)

Type[1]	BABY SAFE plus II
Approval	E1 04 301 146
Order number[2]	A 000 970 38 02
1 Manufacturer: Britax Römer	2 With colour code 9H95

R129 CHILD RESTRAINT SYSTEMS (WEIGHT UP TO 13 KG, SIZE 40 TO 83 CM AND AGE FROM BIRTH TO APPROX. 15 MONTHS)

Type[1]	Baby Safe 3 i-Size
Size categories	R2
Approval	E1*129R03/04*0060*02
Order number	A 000 970 68 02
1 Manufacturer: Britax Römer	

WEIGHT CATEGORY I (9 TO 18 KG AND FROM APPROXIMATELY 9 MONTHS TO 4 YEARS)

Type[1]	DUO plus
Approval	E1 04 301 133
Order number[2]	A 000 970 43 02
1 Manufacturer: Britax Römer	2 With colour code 9H95

WEIGHT CATEGORY II/III (15 TO 36 KG AND FROM APPROX. 3 TO 12 YEARS) (KIDFIX XP)

Type[1]	KIDFIX XP
Approval	E1 04 301 304
Order number[2]	A 000 970 49 02
1 Manufacturer: Britax Römer	2 With colour code 9H95

WEIGHT CATEGORY II/III (15 TO 36 KG AND FROM APPROX. 3 TO 12 YEARS) (AMG KIDFIX XP)

Type[1]	AMG KIDFIX XP
Approval	E1 04 301 304
Order number[2]	A 000 970 33 02
1 Manufacturer: Britax Römer	2 With colour code 9H95

R129 CHILD RESTRAINT SYSTEMS (WEIGHT 15 TO 36 KG, SIZE 100 TO 150 CM AND AGE FROM APPROX. 3.5 TO 12 YEARS) (KIDFIX M I-SIZE)

Type[1]	KIDFIX M i-Size
Size categories	B2
Approval	E1*129R03/04*0061*02
Order number	A 000 970 89 02
1 Manufacturer: Britax Römer	

R129 CHILD RESTRAINT SYSTEMS (WEIGHT 15 TO 36 KG, SIZE 100 TO 150 CM AND AGE FROM APPROX. 3.5 TO 12 YEARS) (AMG KIDFIX M I-SIZE)

Type[1]	AMG KIDFIX M i-Size
Size categories	B2
Approval	E1*129R03/04*0061*02
Order number	A 000 970 91 02

1 Manufacturer: Britax Römer

Suitable seats for attaching child restraint systems

Overview of the suitability of the seats for attaching ISOFIX/LATCH child restraint systems

ISOFIX IS A STANDARDISED SECURING SYSTEM FOR SPECIAL CHILD RESTRAINT SYSTEMS:

The symbol indicates seats suitable for attaching an ISOFIX/LATCH child restraint system in accordance with UN R44 (→ page 161).

ISOFIX/LATCH child restraint systems can also be installed on seats with i-Size markings (→ page 167).

Attach only ISOFIX/LATCH child restraint systems that are approved in accordance with UN R44 as per the following ISOFIX tables.

CARRY COT

Size class – Equipment	Rear seat
F – ISO/L1	X
G – ISO/L2	X

X Not suitable for an ISOFIX/LATCH child restraint system in this weight category and/or size class.

WEIGHT CATEGORY 0 (UP TO 10 KG AND UP TO APPROX. 6 MONTHS)

Size class – Equipment	Rear seat/rear bench seat
E – ISO/R1	IL[1, 2]

IL Suitable for ISOFIX/LATCH child restraint systems according to the table in "Overview of recommended child restraint systems", or if the vehicle and the seat are listed in the child restraint system manufacturer's vehicle model list.

1 The seat must be installed in the direction of travel.

2 It is only permissible to use a seat in the second rear seat row if the maximum distance between the two rear seat rows is set. To this end, the seat in the second rear seat row must be fitted in the rearmost permissible position and the seat in the first rear seat row directly in front must be fitted in the foremost permissible position. If you use the centre seat in the second rear seat row, all seats in the first rear seat row must be fitted in the foremost permissible position.

WEIGHT CATEGORY 0+ (UP TO 13 KG AND UP TO APPROX. 15 MONTHS)

Size class – Equipment	Rear seat/rear bench seat
E – ISO/R1	IL[1, 2]
D – ISO/R2	IL[1, 2]

Size class – Equipment	Rear seat/rear bench seat
C – ISO/R3	IL[1, 2, 3]

IL Suitable for ISOFIX/LATCH child restraint systems according to the table in "Overview of recommended child restraint systems", or if the vehicle and the seat are listed in the child restraint system manufacturer's vehicle model list.

1 The seat must be installed in the direction of travel.

2 It is only permissible to use a seat in the second rear seat row if the maximum distance between the two rear seat rows is set. To this end, the seat in the second rear seat row must be fitted in the rearmost permissible position and the seat in the first rear seat row directly in front must be fitted in the foremost permissible position. If you use the centre seat in the second rear seat row, all seats in the first rear seat row must be fitted in the foremost permissible position.

3 Only on the first rear seat row

WEIGHT CATEGORY I (9 TO 18 KG AND APPROX. 9 MONTHS TO 4 YEARS)

Size class – Equipment	Rear seat/rear bench seat
D – ISO/R2	IL[1, 2]
C – ISO/R3	IL[1, 2, 3]
B – ISO/F2	IUF
B1 – ISO/F2X	IUF

Size class – Equipment	Rear seat/rear bench seat
A – ISO/F3	IUF

IL Suitable for ISOFIX/LATCH child restraint systems according to the table in "Overview of recommended child restraint systems", or if the vehicle and the seat are listed in the child restraint system manufacturer's vehicle model list.

IUF Suitable for forward-facing ISOFIX/LATCH child restraint systems of the "Universal" category in this weight category.

1 The seat must be installed in the direction of travel.

2 It is only permissible to use a seat in the second rear seat row if the maximum distance between the two rear seat rows is set. To this end, the seat in the second rear seat row must be fitted in the rearmost permissible position and the seat in the first rear seat row directly in front must be fitted in the foremost permissible position. If you use the centre seat in the second rear seat row, all seats in the first rear seat row must be fitted in the foremost permissible position.

3 Only on the first rear seat row

Overview of suitability of the seats for attaching i-Size child restraint systems

I-SIZE IS A STANDARDISED SECURING SYSTEM FOR SPECIALLY DESIGNED CHILD RESTRAINT SYSTEMS.

i-Size child restraint systems can be attached to a seat with the i-Size marking (→ page 161).

Child restraint systems that are approved in accordance with the following i-Size table may be attached.

LEGEND FOR THE FOLLOWING I-SIZE TABLES

X	Not suitable for an i-Size child restraint system in the "Universal" category.
i-U	Suitable for forward-facing and rearward-facing i-Size child restraint systems in the "Universal" category.

REAR SEAT/REAR BENCH SEAT (2ND AND 3RD SEAT ROWS)

i-Size child restraint systems (ISO/R1, ISO/R2, ISO/R2X, ISO/R3, ISO/F2, ISO/F2X, ISO/F3, ISO/B2, ISO/B3)	i-U

FRONT PASSENGER SEAT

i-Size child restraint systems (ISO/R1, ISO/R2, ISO/R2X, ISO/R3, ISO/F2, ISO/F2X, ISO/F3, ISO/B2, ISO/B3)	X

Overview of the suitability of seats for attaching belt-secured child restraint systems

Suitability of seats for fastening belt-secured child restraint systems:

REAR SEATS

Weight category 0: up to 10 kg	
Rear seat	U[1]
Rear bench seat	U[1], L[1]
Weight category 0+: up to 13 kg	
Rear seat	U[1]
Rear bench seat	U[1], L[1]
Weight category I: 9 to 18 kg	
Rear seat	U[1], L[1]
Rear bench seat	U[1], L[1]
Weight category II: 15 to 25 kg	
Rear seat	U[1], UF, L
Rear bench seat	U[1], UF, L
Weight category III: 22 to 36 kg	
Rear seat	U, L
Rear bench seat	U, L

U Suitable for child restraint systems of the "Universal" category in this weight category.

L Suitable for semi-universal child restraint systems according to the table in "Recommended child restraint systems", or if the vehicle and the seat are listed in the child restraint system manufacturer's vehicle model list.

UF Suitable for front-facing child restraint systems of the "Universal" category in this weight category.

1 The seat must be installed in the direction of travel.

NOTES ON CHILD RESTRAINT SYSTEMS ON THE FRONT PASSENGER SEAT

- If it is absolutely necessary for you to fit a child restraint system to the front passenger seat, be sure to observe the information on child restraint systems on the front passenger seat (→ page 158).
- Observe the specific instructions for the rear-facing and front-facing child restraint systems. If the front passenger seat is occupied, ensure, both before and during the journey, that the status of the front passenger airbag is correct for the current situation (→ page 137).

FRONT PASSENGER SEAT/FRONT PASSENGER BENCH SEAT

Weight category 0: up to 10 kg	
Front passenger airbag enabled	X
Front passenger airbag disabled[1]	U[2], L
Weight category 0+: up to 13 kg	
Front passenger airbag enabled	X
Front passenger airbag disabled[1]	U[2], L
Weight category I: 9 to 18 kg	
Front passenger airbag enabled	UF[2], L
Front passenger airbag disabled[1]	U[2], L
Weight category II: 15 to 25 kg	
Front passenger airbag enabled	UF[2], L
Front passenger airbag disabled[1]	U[2], L
Weight category III: 22 to 36 kg	
Front passenger airbag enabled	UF[2], L
Front passenger airbag disabled[1]	U[2], L

X Not suitable for children in this weight category.

U Suitable for child restraint systems of the "Universal" category in this weight category.

UF Suitable for front-facing child restraint systems of the "Universal" category in this weight category.

L Suitable for semi-universal child restraint systems according to the table in "Recommended child restraint systems", or if the vehicle and the seat are listed in the child restraint system manufacturer's vehicle model list.

1 The vehicle is equipped with automatic front passenger airbag shutoff. The PASSENGER AIR BAG OFF indicator lamp must be on.

2 In combination with a long seat belt buckle (police seat) not suitable for child restraint systems.

Securing the child restraint system

Adjusting the seat correctly

WHEN INSTALLING A CHILD RESTRAINT SYSTEM ON THE LEFT OR RIGHT-HAND REAR SEAT, ALWAYS OBSERVE THE FOLLOWING:

- Make sure that the child's feet do not touch the front seat. If necessary, move the front seat slightly forward.

If the head restraint of the child restraint system cannot be fully extended when it is installed in the vehicle, this will result in restrictions on the maximum size setting for certain child restraint systems. Observe the child restraint system manufacturer's installation instructions.

> ⓘ Contact with the roof when the head restraint is fully extended and locked in place will not result in any restrictions on use.

ALSO OBSERVE THE FOLLOWING WHEN FITTING AN ISO-FIX/LATCH OR I-SIZE CHILD RESTRAINT SYSTEM:

- **When using a rear-facing child restraint system on a rear seat:** adjust the front seat in such a way as to ensure that it is not touching the child restraint system.
- **When using a front-facing child restraint system with integrated child seat belt:** adjust the head restraint of the respective seat so that it cannot push the child restraint system forward. If necessary, the respective head restraint can be removed. In addition, the seat backrest of the child restraint system must lie as flat as possible against the backrest of the vehicle seat. After the child restraint system has been removed, immediately replace the vehicle head restraint and adjust correctly.
- The child restraint system must not be put under strain between the roof and the seat surface and/or be fitted facing the wrong direction. Where possible, adjust the seat cushion inclination accordingly.
- Adjust the vehicle head restraints so that the child restraint system is not put under strain by the head restraint.

WHEN INSTALLING A BELT-SECURED CHILD RESTRAINT SYSTEM, ALSO OBSERVE:

- **When using a rear-facing child restraint system on a rear seat:** adjust the front seat in such a way as to ensure that it is not touching the child restraint system.
- **When using a front-facing child restraint system with integrated child seat belt:** adjust the head restraint of the respective seat so that it cannot push the child restraint system forward. If necessary, the respective head restraint can be removed. In addition, the seat backrest of the child restraint system must lie as flat as possible against the backrest of the vehicle seat. After the child restraint system has been removed, immediately replace the vehicle head restraint and adjust correctly.
- Ensure that the seat backrest of front-facing child restraint system is lying as flat as possible against the backrest of the rear seat.

- The child restraint system must not be put under strain between the roof and the seat surface and/or be fitted facing the wrong direction. Where possible, adjust the seat cushion inclination accordingly.
- Adjust the vehicle head restraints so that the child restraint system is not put under strain by the head restraint.
- Make sure that the child's feet do not touch the front seat. If necessary, move the front seat slightly forward.

DEPENDING ON THE VEHICLE EQUIPMENT, ALWAYS OBSERVE THE FOLLOWING WHEN INSTALLING A BELT-SECURED CHILD RESTRAINT SYSTEM ON THE FRONT PASSENGER SEAT:

- Observe the notes on rear-facing and front-facing child restraint systems on the front passenger seat (→ page 158).
- **When using a front-facing child restraint system with integrated child seat belt:** remove the head restraint from the respective seat, if possible. After the child restraint system has been removed, immediately replace the head restraint and adjust correctly.
- Ensure that the seat backrest of front-facing child restraint system is lying as flat as possible against the backrest of the front passenger seat.
- The child restraint system must not be put under strain between the roof and the seat surface and/or be fitted facing the wrong direction.
- Adjust the vehicle head restraints so that the child restraint system is not put under strain by the head restraint.
- Never place objects (e.g. cushions) under or behind the child restraint system.
- Set the front passenger seat as far back as possible and move the seat into the highest position possible. Always make sure that the shoulder belt strap is correctly routed from the seat belt outlet of the vehicle to the shoulder belt guide on the child restraint system. The shoulder belt strap must be routed forwards from the seat belt outlet and, where possible, downwards to the child restraint system.
- Fully retract the seat cushion length adjustment.
- Set the seat cushion inclination in such a way that the front edge of the seat cushion is in the highest position and the rear edge of the seat cushion is in the lowest position.
- Set the seat backrest to the most vertical position possible.

Fitting an ISOFIX/LATCH or i-Size child restraint system

WARNING
Risk of injury or death if the permissible gross mass of the child and child restraint system together is exceeded.

Too much load may be placed on the ISOFIX or i-Size child restraint systems and the child may not be restrained correctly in the event of an accident, for example.

- If the child is secured in an ISOFIX or i-Size child restraint system with integrated seat belts, the total mass of the child and child restraint system must not exceed 33 kg.

ALWAYS COMPLY WITH THE INFORMATION ABOUT THE MASS OF THE CHILD RESTRAINT SYSTEM:

- in the manufacturer's installation and operating instructions for the child restraint system used

- on a label on the child restraint system, if present

Check regularly that the permissible gross mass of the child plus the child restraint system is not exceeded.

WHEN YOU INSTALL A CHILD RESTRAINT SYSTEM, OBSERVE THE FOLLOWING:

☑ Always observe the correct use and suitability of the seats for attaching a child restraint system.

ISOFIX/LATCH mounting bracket (→ page 166)

or

i-Size mounting bracket (→ page 167)

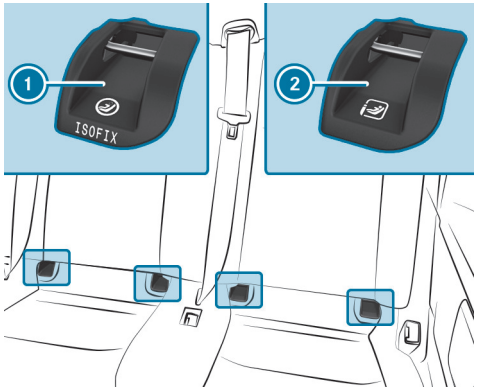

1 ISOFIX mounting bracket
2 i-Size mounting bracket

► Before every journey, do not fail to make sure that the ISOFIX/LATCH child restraint system or the i-Size child restraint system is engaged correctly in both mounting brackets in the vehicle.

NOTE
Damage to the seat belt for the centre seat during installation of the child restraint system

► Make sure that the seat belt is not trapped.

► Attach the ISOFIX or i-Size child restraint system to both mounting brackets in the vehicle.

Securing Top Tether

NOTE
Damage to the single rear seat when you use the EASY ENTRY easy entry and exit feature and a child restraint system secured using Top Tether

If a child restraint system is secured using Top Tether and the EASY ENTRY easy entry and exit feature is used, the single rear seat may be damaged.

► Before you use the EASY ENTRY easy entry and exit feature, unhook the Top Tether hook from the anchorage.

If the child restraint system is equipped with a Top Tether belt:

The risk of injury can be reduced by Top Tether. The Top Tether belt enables an additional connection between the child restraint system attached with ISOFIX or i-Size and the vehicle.

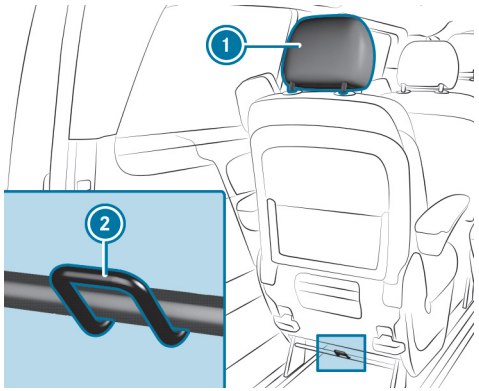

Example

Top Tether anchorage ② is on the lower part of the rear seat on the cross strut between the seats or bench seat legs.

- If necessary, move head restraint ① upwards.
- Install the ISOFIX or i-Size child restraint system with Top Tether. Comply with the child restraint system manufacturer's installation instructions.

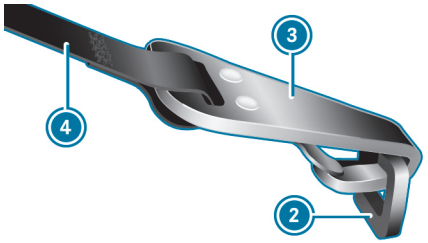

- Guide Top Tether belt ④ under head restraint ① between the two head restraint bars.
- Hook Top Tether hook ③ into Top Tether anchorage ② without twisting.
- Tension Top Tether belt ④. Comply with the child restraint system manufacturer's installation instructions.
- If necessary, slide head restraint ① downwards. Make sure that you do not interfere with the correct routing of Top Tether belt ④.

Fastening the child restraint system with the seat belt

- For a child restraint system in the "Universal" or "Semi-Universal" category, make sure that the system has been approved for the vehicle seat.
- Install the child restraint system.

  The entire base of the child restraint system must always rest on the sitting surface of the seat.
- Always make sure that the shoulder belt strap is correctly routed from the seat belt outlet of the vehicle to the shoulder belt guide on the child restraint system.

  The shoulder belt strap must be routed forwards from the seat belt outlet and, where possible, downwards to the child restraint system.
- If necessary, adjust the seat belt outlet and the front passenger seat as appropriate.

Child safety locks

Activating or deactivating child safety locks for the sliding doors

WARNING
Accident– and risk of injury with unsupervised children in the vehicle

IF YOU LEAVE CHILDREN UNATTENDED IN THE VEHICLE, THEY CAN IN PARTICULAR

- Open doors and thereby endanger other persons or road users.
- get out of the car and are hit by traffic.
- Operate vehicle equipment and become trapped, forexample.

IN ADDITION, THE CHILDREN COULD ALSO SET THE VEHICLE IN MOTION, FOR EXAMPLEBY:

- releasing the parking brake.
- change the gearbox setting.
- start the vehicle.

► Never leave children unattended in the vehicle.

► When leaving the vehicle, always take the SmartKey with you and lock the vehicle.

► Keep the key out of reach of children.

WARNING
Risk of fatalities due to exposure to extreme heat- or cold in the vehicle

If persons – and in particular children – are exposed to solar radiation, or the effects of heat or cold for prolonged periods of time, there is a risk of sustaining injuries or even fatalities!

► Never leave people – especially children – unattended in the vehicle.

WARNING
Risk of accident and injury due to children left unattended in the vehicle

IF CHILDREN ARE TRAVELLING IN THE VEHICLE, THEY COULD, IN PARTICULAR:

- open doors, thereby endangering other persons or road users
- get out and be struck by oncoming traffic
- operate vehicle equipment and become trapped, for example

► Always activate the child safety locks installed if children are travelling in the vehicle.

► Never leave children unattended in the vehicle.

► When leaving the vehicle, always take the key with you and lock the vehicle.

THE FOLLOWING DOORS FEATURE CHILD SAFETY LOCKS:

- Sliding doors

The child safety locks on the doors secure each door separately. The doors can no longer be opened from the inside (except the electric sliding door). The door can be opened from the outside when the vehicle is unlocked.

Only the sliding door control elements in the rear passenger compartment are deactivated if the electric sliding door is secured. The electric sliding door can be opened any time using the button in the centre console.

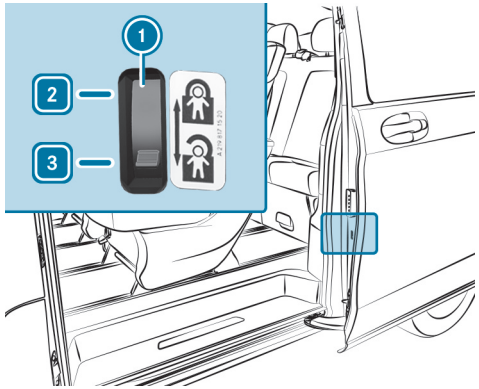

► Slide the child safety lock latch (1) into position [2] (secure) or [3] (unlock).

► Ensure that the child safety locks are working properly.

Passive occupant presence reminder

Passive occupant presence reminder function

The occupant presence reminder can help point out any forgotten children in the rear of the vehicle. It activates automatically if it can be assumed that small children could get in or out of the vehicle if a rear door is opened for a longer period of time before or while the vehicle is switched on.

When the vehicle is switched off after a journey of three minutes or longer, the Do not leave persons or animals in the vehicle message appears on the driver display if the system was automatically activated beforehand.

THE SYSTEM DEACTIVATES AUTOMATICALLY IN THE FOLLOWING SITUATIONS:

- When the rear door is opened after a journey.
- Two minutes after the end of the journey.
- When the vehicle is locked from the outside.

You can switch the function off permanently in the multimedia system (⟶ page 176). When the system is deactivated, the indicator lamp lights up on the driver display.

Switching the passive occupant presence reminder on or off in the multimedia system

Multimedia system:

Settings ▶▶ Vehicle ▶▶ Occupant protection

▶ Activate or deactivate the function.

Opening and closing

This interactive PDF works like a website – tap or click a button to jump straight to where you want to go.
You can return here at any time via the navigation bar at the top left.

Key
Doors
Sliding door
Electric sliding door
Tailgate
Side window
Panorama sliding sunroof
Anti-theft prevention

Key

Notes on the key's radio connections

DANGER
Risk of fatal injury to persons with medical devices due to electromagnetic radiation when using the start/stop button

Persons with medical devices, e.g. pacemakers or defibrillators:

There is a radio connection between the key and the vehicle.

The function of a medical device can be impaired.

► Before operating the vehicle, consult your doctor or the manufacturer of the medical device about any possible effects from such systems.

DETECTION RANGE OF KEYLESS-START FUNCTION ANTENNA

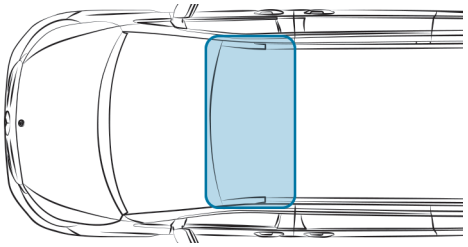

Overview of key functions

WARNING
Accident– and risk of injury with unsupervised children in the vehicle

IF YOU LEAVE CHILDREN UNATTENDED IN THE VEHICLE, THEY CAN IN PARTICULAR

- Open doors and thereby endanger other persons or road users.
- get out of the car and are hit by traffic.
- Operate vehicle equipment and become trapped, forexample.

IN ADDITION, THE CHILDREN COULD ALSO SET THE VEHICLE IN MOTION, FOR EXAMPLEBY:

- releasing the parking brake.
- change the gearbox setting.
- start the vehicle.

► Never leave children unattended in the vehicle.

► When leaving the vehicle, always take the SmartKey with you and lock the vehicle.

► Keep the key out of reach of children.

NOTE
Damage to the key caused by magnetic fields
► Keep the key away from strong magnetic fields.

ⓘ The key may vary from the one shown in the diagram, depending on the vehicle equipment.

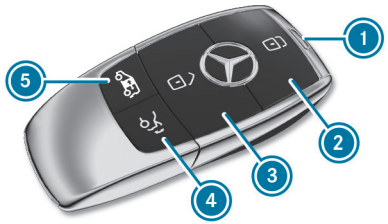

Key (example)

1. Indicator lamp
2. To lock the vehicle centrally
3. To unlock the vehicle centrally or only the driver's door
4. To unlock, and open or close the EASY-PACK tailgate, or unlock separately from the rear window being opened, or unlock the EASY-PACK tailgate and sliding doors
5. To unlock the EASY-PACK tailgate and sliding doors, or to unlock and open/close the electric sliding door

ⓘ If the indicator lamp 1 does not light up after pressing the 🔓 or 🔒 button, the battery charge level is low or possibly empty. Replace the battery as soon as possible.

Replace the key battery (⟶ page 181).

THE KEY'S FACTORY SETTING ENABLES YOU TO CENTRALLY LOCK AND UNLOCK THE FOLLOWING COMPONENTS:

- Front doors
- Sliding doors
- Tailgate

If the vehicle is not opened within approximately 40 seconds after unlocking, it locks again. Anti-theft protection is primed again.

Do not keep the key together with electronic devices or metal objects. This can impair the key's functionality.

Activating/deactivating the acoustic locking verification signal

Multimedia system:

⟶ 🏠 ▶▶ Settings ▶▶ Vehicle ▶▶ Open/close

► Switch the Acoustic lock on or off.

ⓘ **Please observe:**
The selected setting for the acoustic locking verification signal must comply with the applicable national road traffic rules. In some countries, including Germany, using the acoustic locking verification signal is prohibited by traffic laws (under §16 Para. 1 and §30 Para. 1 of the German national road traffic regulations). The driver of the vehicle must comply with these regulations. In countries where use of the function is prohibited, this function is not activated in the vehicle and must not be activated.

Changing the unlocking settings

THE KEY HAS THE FOLLOWING ADJUSTABLE UNLOCKING FUNCTIONS:

- unlocking the vehicle centrally
- unlocking the driver's door

► **To switch between settings:** press the [🔓] and [🔒] buttons simultaneously for approximately six seconds until the indicator lamp flashes twice.

► **To unlock the vehicle centrally when the unlocking function is selected for the driver's door:** press the [🔓] button a second time.

Reducing the energy consumption of the key

DEACTIVATE KEY FUNCTION

If you do not use the vehicle or a key for an extended period of time, you can also deactivate the function of the key to reduce the energy consumption of the key.

► Press and hold the key button [🔒].

► With the key button [🔒] pressed, immediately press key button [🔓] twice in quick succession.

The indicator lamp of the key lights up once briefly and then again for a longer period.

ACTIVATE KEY FUNCTION

► Press any button on the key.

ⓘ When the key is located in the storage compartment for starting in emergency operation mode, the key function is activated automatically (→ page 351).

Removing and inserting the emergency key

REMOVING THE EMERGENCY KEY

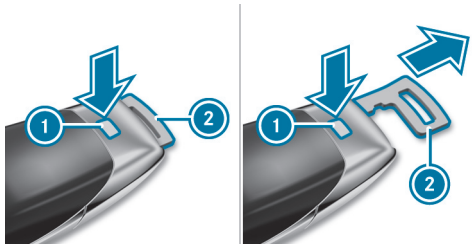

► Press release knob ①.

Emergency key ② is pushed out slightly.

► Pull out emergency key ② until it engages in the intermediate position.

ⓘ Depending on the vehicle's equipment, the intermediate position is not available.

► Press release knob ① again and fully remove emergency key ②.

INSERTING THE EMERGENCY KEY

► Press release knob ①.

► Insert emergency key ② to the intermediate position or fully until it engages.

You can use the intermediate position of the emergency key ② to attach the key to a key ring.

The anti-theft alarm system (ATA) is triggered when you unlock and open the vehicle using the emergency key ② (→ page 211).

Replacing the key battery

DANGER
Risk of fatal injury due to swallowing batteries

Batteries contain toxic and corrosive substances. If batteries are swallowed or otherwise enter the body, severe internal burns can occur within two hours.

There is a risk of fatal injury!

- Keep the batteries out of the reach of children.
- If the lid and/or the battery compartment do not close securely, stop using the key and keep it away from children.
- If batteries are swallowed or otherwise enter the body, seek immediate medical attention.

ENVIRONMENTAL NOTE
Environmental damage due to improper disposal of batteries

Batteries contain pollutants. It is illegal to dispose of them with the household rubbish.

- Dispose of batteries in an environmentally responsible manner. Take discharged batteries to a qualified specialist workshop or to a collection point for used batteries.

Requirements:

- You need a CR 2032 lithium cell battery (3 V).

Mercedes-Benz recommends that you have the battery replaced at a qualified specialist workshop.

- Remove the emergency key (→ page 180).

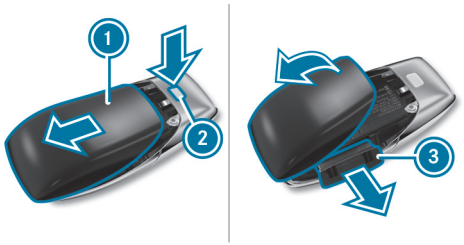

- Press the release knob ② down fully and slide the cover ① in the direction of the arrow.
- Open the cover ① in the direction of the arrow and remove.

- Remove the battery compartment ③ and remove the flat battery.
- Insert the new battery into the battery compartment ③. Ensure that the positive terminal marking on the battery matches up with that in the battery compartment.
- Insert the battery compartment ③.
- Re-attach the cover ① and slide closed so that it engages.
- Insert the emergency key again (→ page 180).

Rectifying problems with the key

YOU CAN NO LONGER LOCK OR UNLOCK THE VEHICLE.

POSSIBLE CAUSES:

- The key battery is weak or flat.

- Check the battery using the indicator lamp (→ page 178).
- Replace the key battery as required (→ page 181).
- Use the replacement key.
- Use the emergency key to lock and unlock the vehicle (→ page 186).
- Have the key checked at a qualified specialist workshop.

THERE IS INTERFERENCE FROM A POWERFUL RADIO SIGNAL SOURCE.

POSSIBLE CAUSES IF THE FUNCTION OF THE KEY IS IMPAIRED:

- high voltage power lines
- mobile phones
- electronic devices (notebooks, tablets)
- shielding due to metal objects or induction loops for electrical gate systems or automatic barriers

- Make sure that there is sufficient distance between the key and the potential source of interference.

YOU HAVE LOST A KEY.

- Have the key deactivated at a qualified specialist workshop.
- If necessary, have the mechanical locks replaced.

Doors

Unlocking and opening the door from inside

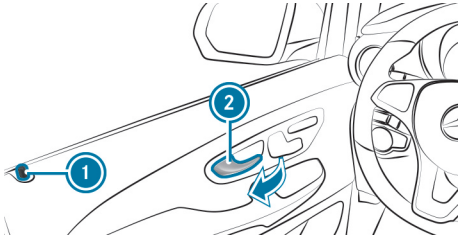

Door handle (example: driver's door)

► Pull the door handle (2).
Safety pin (1) pops up when the door is unlocked.

Centrally locking and unlocking the door from the inside

WARNING
Accident- and risk of injury with unsupervised children in the vehicle

IF YOU LEAVE CHILDREN UNATTENDED IN THE VEHICLE, THEY CAN IN PARTICULAR

- Open doors and thereby endanger other persons or road users.
- get out of the car and are hit by traffic.
- Operate vehicle equipment and become trapped, forexample.

IN ADDITION, THE CHILDREN COULD ALSO SET THE VEHICLE IN MOTION, FOR EXAMPLEBY:

- releasing the parking brake.
- change the gearbox setting.
- start the vehicle.

► Never leave children unattended in the vehicle.

► When leaving the vehicle, always take the SmartKey with you and lock the vehicle.

- Keep the key out of reach of children.

WARNING
Risk of fatalities due to exposure to extreme heat- or cold in the vehicle

If persons – and in particular children – are exposed to solar radiation, or the effects of heat or cold for prolonged periods of time, there is a risk of sustaining injuries or even fatalities!

- Never leave people – especially children – unattended in the vehicle.

You can use the central locking buttons to centrally lock and unlock the entire vehicle from the inside.

The central locking buttons are located in the driver's door.

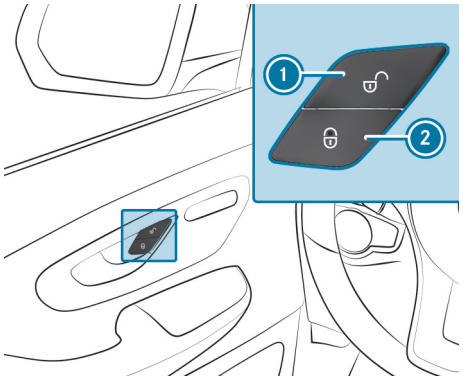

Central locking buttons (vehicles with manually adjustable front seats)

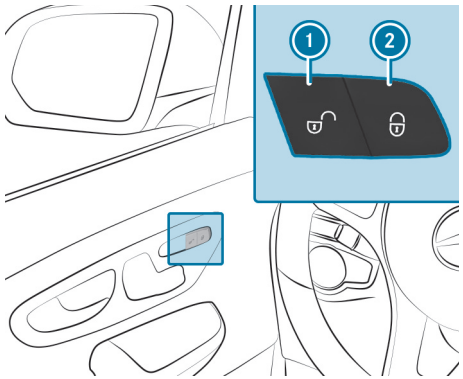

Central locking buttons (vehicles with electrically adjustable front seats)

- **To lock or unlock the entire vehicle:** press the button 1 (unlock) or 2 (lock) with the doors closed.

OBSERVE THE FOLLOWING SETTINGS WHEN LOCKING AND UNLOCKING FROM INSIDE:

- If the driver's door or front passenger door is open, the open door is not locked.

  All other doors and the tailgate are locked.
- If a sliding door or the tailgate is open, only the driver's door and front passenger doors are locked.
- You cannot unlock the vehicle centrally from the inside if the vehicle has been locked with the key.
- If the vehicle has been locked using the central locking button and a door is opened from the inside, only the door that has been opened is unlocked.
- If the vehicle has previously been locked with the key, opening a door from the inside will trigger the anti-theft alarm system. Switch off the alarm (→ page 211).

Activating/deactivating the automatic lock

Requirements

- The power supply or the vehicle has been switched on.
- The doors are closed.

When the automatic lock is activated and the vehicle is travelling at a speed above 15 km/h, the vehicle is locked automatically.

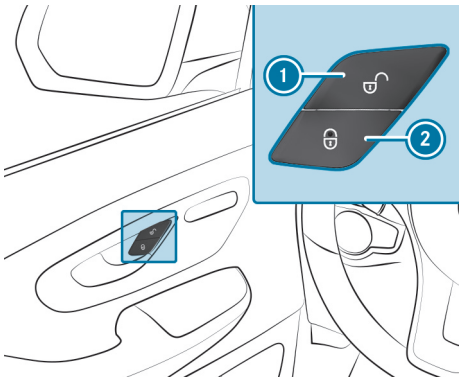

Central locking buttons (vehicles with manually adjustable front seats)

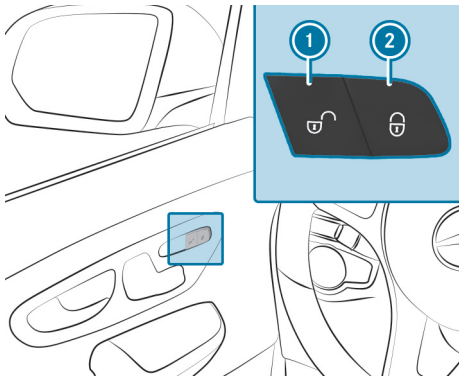

Central locking buttons (vehicles with electrically adjustable front seats)

If the vehicle is being tow-started, push-started or tested on a roller dynamometer, there is a risk of being locked out when the function is activated.

- **To activate:** press and hold button (2) until you hear an acoustic signal.
- **To deactivate:** press and hold button (1) until you hear an acoustic signal.

Activating or deactivating the automatic locking function via the multimedia system

Multimedia system:

Settings ▶▶ Vehicle ▶▶ Open/close

ⓘ The vehicle is locked automatically when the vehicle is switched on and the wheels are turning faster than walking pace.

- Activate or deactivate Automatic locking.

IN THE FOLLOWING SITUATIONS THERE IS A RISK OF BEING LOCKED OUT WHEN THE FUNCTION IS ACTIVATED:

- The vehicle is being towed or pushed.
- If the vehicle is being tested on a roller dynamometer.

Unlocking and locking the driver's door with the emergency key

ⓘ To lock the vehicle fully with the emergency key, press down the safety pins of the doors. Then lock the driver's door with the emergency key.

► **To unlock:** insert the emergency key fully into the driver's door lock and turn it anti-clockwise.

► **To lock:** insert the emergency key fully into the driver's door lock and turn it clockwise.

ⓘ **Right-hand drive vehicles:** turn the emergency key in the opposite direction for each case.

Sliding door

Opening/closing the sliding door from outside

WARNING
Risk of becoming trapped due to an open sliding door which is not engaged in place

On an incline, the sliding door can move by itself.

This can cause you or other people to become trapped.

- Always make sure that the open sliding door is engaged. To do so, open the sliding door to the stop.

NOTE
Damage to the sliding door due to incorrect use

Using the lower guide of the sliding door (carriage) as a step can result in damage to the trim and/or mechanical components of the sliding door.

- Do not use the lower guide of the sliding door (carriage) as a step.

OPENING

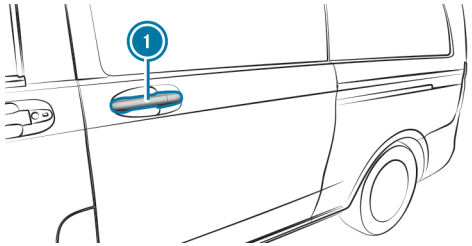

The sliding door is equipped with an active retainer which engages when the door is opened all the way to the end stop.

- Pull the door handle 1.
  The sliding door opens.
- Push back the sliding door using door handle 1 until it engages.
- Ensure that the sliding door is fully engaged by gently pulling on the door.

CLOSING

- Pull the door handle 1.
  The sliding door is released from its catch.
- Push the sliding door firmly forwards using door handle 1 and close it.

Opening/closing the sliding door from inside

WARNING
Risk of becoming trapped due to an open sliding door which is not engaged in place

On an incline, the sliding door can move by itself.

This can cause you or other people to become trapped.

- Always make sure that the open sliding door is engaged. To do so, open the sliding door to the stop.

WARNING
Risk of becoming trapped due to sliding door opening towards the rear

When you open the sliding door, the sliding door could hit other people as it moves towards the rear of the vehicle.

- Only open the sliding door when traffic conditions permit.

Requirements

- The child safety lock is deactivated.

OPENING

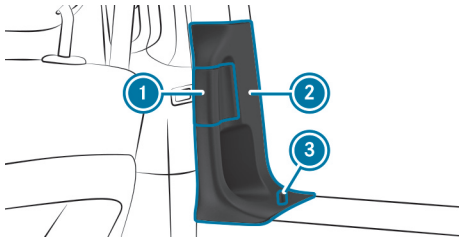

- Pull back rocker switch 1.
  The safety pin 3 pops up if the sliding door is locked. The sliding door unlocks and opens.
- Push back the sliding door using door handle 2 until it engages.
- Ensure that the sliding door is fully engaged by gently pulling on the door.

CLOSING

- Push rocker switch 1 forwards.
  The sliding door is released from its catch.
- Push the sliding door forwards using door handle 2 and close it.

Electric sliding door

Function of the electric sliding door

WARNING
Risk of becoming trapped due to sliding door opening towards the rear

When you open the sliding door, the sliding door could hit other people as it moves towards the rear of the vehicle.

► Only open the sliding door when traffic conditions permit.

NOTE
Damage to the sliding door due to incorrect use

Using the lower guide of the sliding door (carriage) as a step can result in damage to the trim and/or mechanical components of the sliding door.

► Do not use the lower guide of the sliding door (carriage) as a step.

You must reset the electric sliding door following a malfunction or a drop in voltage (⟶ page 193).

Your vehicle may feature electric sliding doors on the left and/or right-hand side.

YOU CAN OPEN AND CLOSE THE SLIDING DOOR WITH THE FOLLOWING CONTROL ELEMENTS:

- Sliding door buttons on the centre console
- Sliding door button on the door sill (B-pillar)
- Door handle (inside or outside)
- Key

AUTOMATIC BLOCKAGE DETECTION WITH SLIDING DOOR REVERSING FUNCTION
If a solid object blocks or restricts the sliding door during the automatic closing process, the sliding door opens again automatically. If the sliding door is obstructed during the opening process, it moves back a few centimetres in the opposite direction and stops.

The automatic blockage detection with reversing function serves solely as an aid. It is not a substitute for you having to pay attention when closing the electric sliding door.

If an obstacle is detected, the display shows a message, forexample Right electric sliding door Obstruction detected, and five warning tones sound.

ⓘ In unfavourable operating conditions, e.g. frost, ice or heavy soiling, press and hold the corresponding sliding door button. The electric sliding door moves with increased force. Please be aware that blockage detection is less sensitive in this case. To stop the movement, release the sliding door button.

WARNING
Risk of becoming trapped despite reversing function

THE REVERSING FEATURE DOES NOT REACT:

- to soft, light and thin objects, e.g. fingers
- over the last 8 mm of the closing movement

The reversing feature therefore cannot prevent someone being trapped in these situations.

► Make sure that no body parts are in the closing area.

IF SOMEONE BECOMES TRAPPED, TAKE THE FOLLOWING ACTIONS:

- press the button on the key or
- pull the exterior door handle or
- press the appropriate sliding door button in the centre console or
- press the button on the door sill or
- pull the rocker switch on the door handle

Opening and closing the electric sliding door from the inside

WARNING
Risk of becoming trapped due to sliding door opening towards the rear

When you open the sliding door, the sliding door could hit other people as it moves towards the rear of the vehicle.

► Only open the sliding door when traffic conditions permit.

OPENING

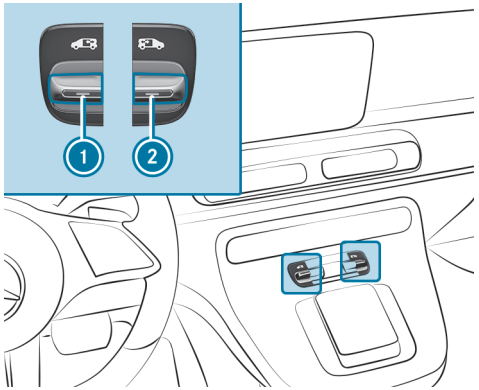

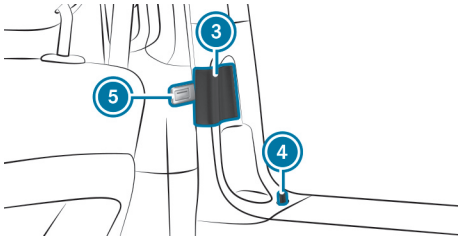

1 Sliding door button for the left sliding door
2 Sliding door button for the right sliding door
3 Rocker switch
4 Safety pin
5 Sliding door button in the door sill

If the child safety lock has not been activated, you can only open a sliding door with the sliding door button 5 on the door sill or with the rocker switch 3 on the door handle.

The sliding door is equipped with an active retainer which engages the door at the end stop when opened.

- Press the appropriate sliding door button 1 or 2 in the centre console briefly.

or

- Press the sliding door button 5 on the door sill.

or

- Briefly pull back the rocker switch 3.

  The safety pin 4 pops up if the sliding door is locked. The sliding door unlocks, automatic operation is started and the sliding door opens.

  If you use the sliding door button 1 or 2 in the centre console, you will hear two acoustic signals during the opening procedure.

  The indicator lamp in the corresponding sliding door button 1 or 2 in the centre console flashes for the duration of automatic operation.

  The indicator lamp in the corresponding sliding door button 1 or 2 in the centre console is lit whenever the sliding door opens. The display can also show the Sliding door open message depending on the vehicle's equipment.

CLOSING

- Press the appropriate sliding door button 1 or 2 in the centre console briefly.

or

- Press the sliding door button 5 on the door sill.

or

- Briefly push the rocker switch 3 forwards.

  The sliding door is released from its lock and automatic operation is started. The sliding door closes.

If you use the sliding door button ① or ② in the centre console, you will hear two acoustic signals during the closing procedure.

The indicator lamp in the corresponding sliding door button ① or ② in the centre console goes out whenever the sliding door is closed.

INTERRUPTING AUTOMATIC OPERATION

- Press the corresponding sliding door button ① or ② in the centre console again.

or

- Press the sliding door button ⑤ on the door sill again.

or

- Briefly pull back the rocker switch ③.

Opening/closing the electric sliding door with the key

ⓘ If the vehicle is fitted with two sliding doors, the button on the key can only open or close one of the two sliding doors(→ page 193).

- **To unlock:** briefly press the button on the key.
- **To open:** press and hold the button on the key for longer than 0.5 seconds.

  You will hear two acoustic signals and the sliding door will open automatically.
- **To close:** press and hold the button on the key for longer than 0.5 seconds.

  You will hear two acoustic signals and the sliding door will close automatically.
- **To interrupt automatic operation:** briefly press the button on the key.

  The sliding door stops moving.

Opening/closing the electric sliding door from the outside

NOTE

Damage to the sliding door due to incorrect use

Using the lower guide of the sliding door (carriage) as a step can result in damage to the trim and/or mechanical components of the sliding door.

- Do not use the lower guide of the sliding door (carriage) as a step.

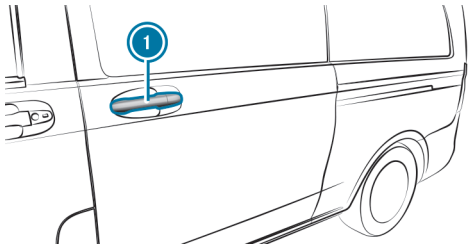

- **To open:** pull on the door handle ①.
  The sliding door opens. In addition, you will hear two acoustic signals.
- **To close:** pull on the door handle ①.
  The sliding door closes.
- **Interrupting automatic mode:** pull on the door handle ① again.

Programming the key switch for the sliding door

Requirements:

- The vehicle is equipped with two electric sliding doors.
- The sliding door to be programmed is open.
- The vehicle is switched on.

The button on the key can be programmed. Program the button to open the right or left sliding door.

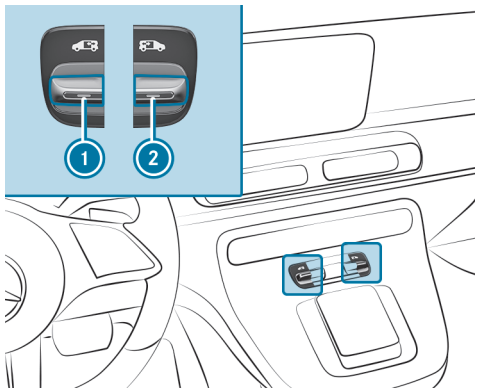

① Sliding door button for the left sliding door
② Sliding door button for the right sliding door

- Press and hold the sliding door button ① or ② in the centre console for the corresponding sliding door until the sliding door is closed and four acoustic signals have sounded.
  The message Left electric sliding door Key programmed/Right electric sliding door Key programmed appears in the display.

Resetting the electric sliding door

You must reset the electric sliding door if there has been a malfunction or a voltage drop.

- If the sliding door is open: close the sliding door by hand.
- Using the corresponding sliding button or on the centre console, open the sliding door at least 40 cm and then close the sliding door completely.

- When the sliding door is closed, open the sliding door completely using the corresponding sliding door button or on the centre console.

  The sliding door is reset.

Rectifying problems with the electric sliding door

THE ELECTRIC SLIDING DOOR IS LOCKED IN PLACE.
Unfavourable operating conditions, e.g. frost, ice or heavy soiling, may obstruct the function of the sliding door.

- Press and hold the sliding door button until the sliding door has opened or closed.

  The sliding door moves with increased force. Please be aware that blockage detection is less sensitive in such circumstances. To stop the movement, release the sliding door button.

- Remove the cause of the blockage at the earliest opportunity.

Tailgate

Opening and closing the tailgate

DANGER
Risk of poisoning from exhaust gases

Combustion engines emit poisonous exhaust gases, such as carbon monoxide. Exhaust gases can enter the vehicle interior if the tailgate is open when the engine is running, especially if the vehicle is in motion.

- Always switch off the engine before opening the tailgate.
- Never drive with the tailgate open.

NOTE
Damage to the tailgate caused by obstacles above the vehicle

The tailgate swings rearwards and upwards when it is opened.

- Make sure that there is sufficient space behind and above the tailgate.

You will find details of the tailgate opening dimensions in the printed Owner's Manual under "Technical data".

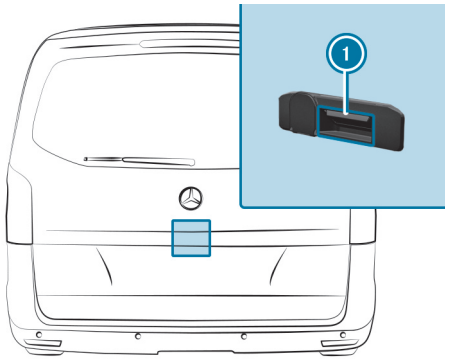

- **To open:** push the button (1) on the handle and raise the tailgate.

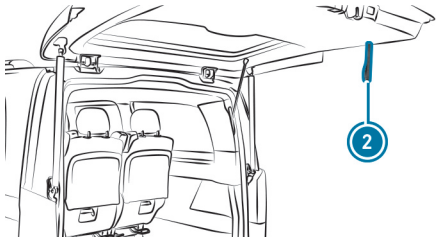

- **To close:** pull the tailgate downwards using the loop (2) and firmly close it from outside.

OPENING THE TAILGATE IN AN EMERGENCY

The tailgate cannot be opened if the battery voltage is low or if there is a drop in voltage.

In an emergency, you can open the tailgate using the unlocking catch for service purposes.

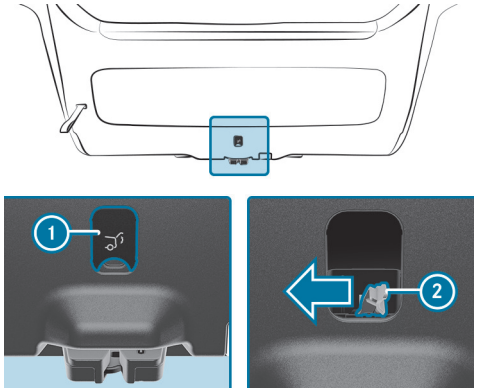

- Lever off the cover ① on the tailgate using a suitable tool, e.g. the screwdriver from the vehicle tool kit.
- Push the screwdriver into the opening and press the release lever ② in the direction indicated by the arrow until the tailgate unlocks and opens.
- Lift the tailgate upwards.

EASY-PACK tailgate

NOTES ON THE EASY-PACK TAILGATE

DANGER
Risk of poisoning from exhaust gases

Combustion engines emit poisonous exhaust gases, such as carbon monoxide. Exhaust gases can enter the vehicle interior if the tailgate is open when the engine is running, especially if the vehicle is in motion.

- Always switch off the engine before opening the tailgate.
- Never drive with the tailgate open.

NOTE
Damage to the tailgate caused by obstacles above the vehicle

The tailgate swings rearwards and upwards when it is opened.

- Make sure that there is sufficient space behind and above the tailgate.

You will find details of the tailgate opening dimensions in the printed Owner's Manual under "Technical data".

OBJECT RECOGNITION WITH REVERSING FUNCTION

The tailgate is equipped with automatic object recognition with reversing function. If a solid object blocks or restricts the tailgate during the automatic closing process, the tailgate opens again automatically. The automatic object recognition with reversing function serves solely as an aid. It is not a substitute for you having to pay attention when closing the tailgate.

WARNING
Risk of becoming trapped despite reversing function

THE REVERSING FUNCTION DOES NOT REACT:

- to soft, light and thin objects, e.g. fingers.
- over the last 8 mm of the closing path.

In these situations in particular, the reversing function cannot prevent someone being trapped.

► Make sure that no body parts are in the closing area.

IF SOMEONE GETS TRAPPED:

- Press the button on the key, or
- Press the closing button on the tailgate, or
- Pull the tailgate handle.

OPENING AND CLOSING THE EASY-PACK TAILGATE

DANGER
Risk of poisoning from exhaust gases

Combustion engines emit poisonous exhaust gases, such as carbon monoxide. Exhaust gases can enter the vehicle interior if the tailgate is open when the engine is running, especially if the vehicle is in motion.

► Always switch off the engine before opening the tailgate.

► Never drive with the tailgate open.

WARNING
Risk of becoming trapped despite reversing function

THE REVERSING FUNCTION DOES NOT REACT:

- to soft, light and thin objects, e.g. fingers.
- over the last 8 mm of the closing path.

In these situations in particular, the reversing function cannot prevent someone being trapped.

► Make sure that no body parts are in the closing area.

IF SOMEONE GETS TRAPPED:

- Press the button on the key, or
- Press the closing button on the tailgate, or
- Pull the tailgate handle.

NOTE
Damage to the tailgate caused by obstacles above the vehicle

The tailgate swings rearwards and upwards when it is opened.

► Make sure that there is sufficient space behind and above the tailgate.

Requirements:

- The rear window is closed.
- The tailgate is unlocked.
- There are no persons within the swinging range of the tailgate.

- The button on the key is programmed to open and close the tailgate (→ page 200).

TO OPEN

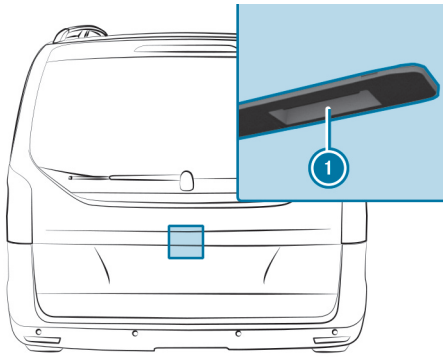

► Press the button 1 in the handle and step out of the swinging range of the tailgate.

or

► Briefly press and hold the button on the key.

Automatic operation is started. The tailgate opens and swings upwards.

In addition, two acoustic signals are sounded.

TO CLOSE

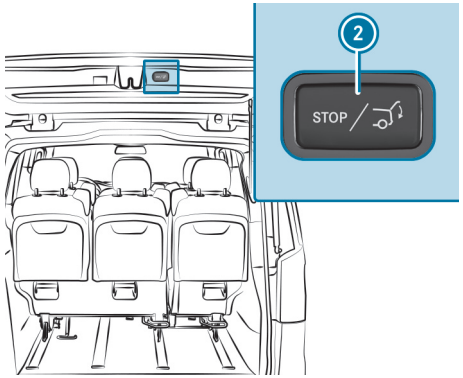

► Press the button 2 in the tailgate and step out of the swinging range of the tailgate.

or

► Briefly press and hold the button on the key.

Automatic operation is started and the tailgate closes.

During closing, the closing button 2 flashes and two acoustic signals are sounded.

INTERRUPTING AUTOMATIC OPERATION

► Press the button 1 in the handle again.

or

► Press the closing button 2 in the tailgate again.

or

► Briefly press and hold the button on the key again.

ADJUSTING THE OPENING ANGLE OF THE TAILGATE

SETTING THE END POSITION

You can set the opening angle of the tailgate by saving the desired position as the end position.

► Open the tailgate and stop automatic operation in the desired position.

or

► Open the tailgate and manually swing it into the desired position.
► Press and hold the closing button on the tailgate until the acoustic signal sounds once.

The current position of the tailgate will have been saved as the end position.

RESETTING TO THE MAXIMUM OPENING ANGLE

► Open the tailgate.

► Press and hold the closing button on the tailgate until the acoustic signal sounds twice.

The saved end position will have been deleted and the tailgate will open again to the maximum extent.

RESETTING THE TAILGATE

You must reset the tailgate if there has been a malfunction or a voltage drop.

► If the tailgate is open: close the tailgate by hand.

► Briefly press the button on the handle of the tailgate, step out of the swinging range of the tailgate and open the tailgate.

► When the tailgate is fully open, press the closing button in the tailgate and step out of the swinging range of the tailgate.

The tailgate closes. When the tailgate is fully closed, it is reset and operational.

ⓘ When the button on the key is programmed for operating the tailgate (→ page 200), you can also use the key to open and close the tailgate.

OPENING AND CLOSING THE REAR WINDOW

⚠ **DANGER**
Risk of poisoning from exhaust gases

Combustion engines emit poisonous exhaust gases, such as carbon monoxide. Exhaust gases can enter the vehicle interior if the rear window is open when the engine is running, especially if the vehicle is in motion.

► Always switch off the engine before opening the rear window.

► Never drive with the rear window open.

Requirements

- The vehicle or load compartment is unlocked and the tailgate is closed.
- **To open using the key:**
  - The vehicle is fitted with an EASY-Pack tailgate and the key button is programmed to unlock the rear window (→ page 200) or the vehicle is equipped with the Bunk Package.

TO OPEN

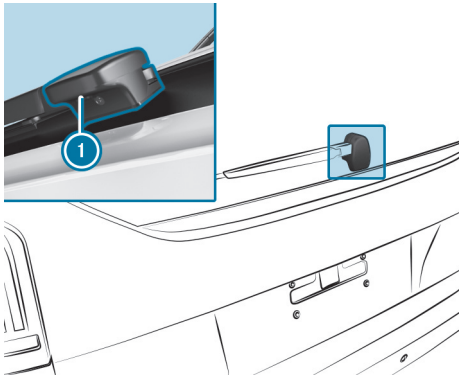

► Press the button on the key.

or

► Press button 1 on the handle on the rear window.
► Lift the rear window up using the handle.

TO CLOSE

► Swing the rear window down and push it closed.

PROGRAMMING THE KEY SWITCH FOR THE TAILGATE OR REAR WINDOW

Requirements

- The tailgate and the rear window are closed.
- The vehicle is switched on.

If your vehicle features the EASY-PACK tailgate, you can program the button on the key either to open and close the tailgate or to unlock the rear window.

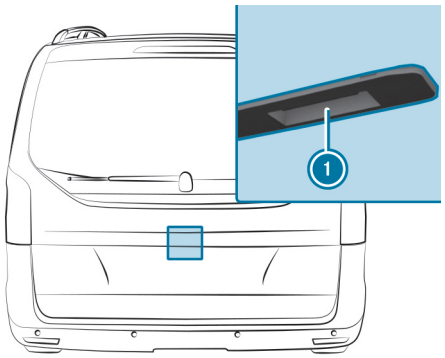

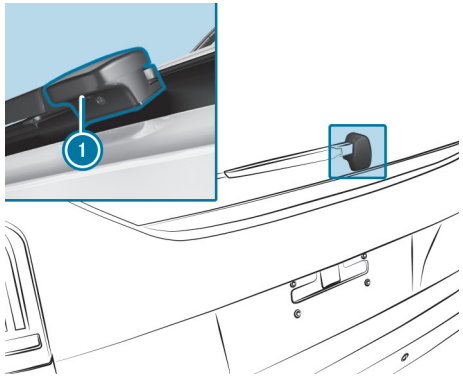

► Press the buttons 1 first in the handle of the rear window, then in the handle of the tailgate and hold both buttons 1 pressed for approximately five seconds.

After successfully changing the function, the vehicle turn signal lamps flash once.

► Check the function of the button on the key.

Side window

Opening and closing the side windows

WARNING
Risk of becoming trapped when opening a side window

When you open a side window, parts of the body could be drawn in or become trapped between the side window and window frame.

- When opening, make sure that nobody is touching the side window.
- If someone is trapped, release the button immediately or pull it in order to close the side window again.

WARNING
Risk of becoming trapped when closing a side window

When closing a side window, body parts could be trapped in the closing area in the process.

- When closing, make sure that no body parts are in the closing area.
- If someone is trapped, release the button immediately or press the button in order to reopen the side window.

WARNING
Risk of becoming trapped when children operate the side windows

Children could become trapped if they operate the side windows, particularly when unattended.

- Never leave children unattended in the vehicle.
- When leaving the vehicle, always take the key with you and lock the vehicle.

WARNING
Risk of fatalities due to exposure to extreme heat- or cold in the vehicle

If persons – and in particular children – are exposed to solar radiation, or the effects of heat or cold for prolonged periods of time, there is a risk of sustaining injuries or even fatalities!

- Never leave people – especially children – unattended in the vehicle.

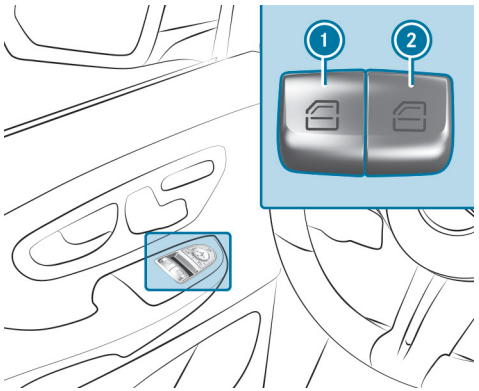

- **To open manually:** press and hold the button 1 or 2.
- **To close manually:** pull and hold the button 1 or 2.

The side windows can also be operated automatically.

- **To open completely:** briefly press the button 1 or 2 beyond the point of resistance.
  Automatic operation begins.
- **To close completely:** briefly pull the button 1 or 2 beyond the point of resistance.
  Automatic operation begins.
- **To interrupt automatic operation:** briefly press or pull the button 1 or 2 again.

You can still operate the side windows when the vehicle is parked. This function will remain available for around five minutes or until you open a front door.

AUTOMATIC REVERSING FUNCTION OF THE SIDE WINDOWS

If an object blocks a side window during the closing process, the side window will open again automatically. The automatic reversing function serves solely as an aid and is not a substitute for your attentiveness.

- Ensure that all body parts are clear of the closing area during the closing process.

WARNING
Risk of becoming trapped despite there being reversing protection on the side window

THE REVERSING FUNCTION WILL NOT REACT:

- to soft, light and thin objects, e.g. fingers
- over the last 4 mm of the closing path
- during resetting
- when the side window is closed again manually immediately after automatic reversing

The reversing function cannot prevent someone from becoming trapped in these situations.

- During the closing process, make sure that no body parts are in the closing area.
- If someone becomes trapped, press the button to open the side window again.

Convenience opening (ventilating the vehicle before starting a journey)

WARNING
Risk of entrapment when opening a side window

When opening a side window, parts of the body could be drawn in or become trapped between the side window and window frame.

- When opening, make sure that nobody is touching the side window.
- Release the button immediately if somebody becomes trapped.

You can ventilate the vehicle before you start driving. The "convenience opening" function can be operated using the key without switching on the vehicle. The key must be in the immediate vicinity of the vehicle.

- Press and hold the button on the key.
  THE FOLLOWING FUNCTIONS ARE PERFORMED:
  - the vehicle is unlocked
  - the side windows are opened
  - the panoramic sliding sunroof is opened
  - the seat ventilation for the driver's seat is switched on

If the roller sunblind of the panoramic sliding sunroof is closed, the roller sunblind is opened first.

- **To interrupt convenience opening:** release the button.
- **To continue convenience opening:** press the button again and hold pressed.

Convenience closing (closing the vehicle from outside)

WARNING
Risk of entrapment due to not paying attention during convenience closing

When the convenience closing feature is operating, parts of the body could become trapped in the closing area of the side window and the sliding sunroof.

- When the convenience closing feature is operating, monitor the entire closing process and make sure that no body parts are in the closing area.

Requirements:

- The key is near the vehicle.

- Press and hold the button on the key.
  THE FOLLOWING FUNCTIONS ARE PERFORMED:
  - the vehicle is locked
  - the side windows are closed
  - the panoramic sliding sunroof is closed

- **To interrupt convenience closing:** release the button.
- **To continue convenience closing:** press and hold the button again.

Resetting the side windows

The side windows must be readjusted after a malfunction or a voltage supply interruption.

- Switch on the power supply (→ page 348).
- Push both buttons on the power window and hold for approximately one second after the side window has closed.
- If the side windows remain closed when you release the buttons, they have been reset correctly. If this is not the case, repeat the steps described for the open side windows.

Rectifying problems with the side windows

WARNING
Risk of becoming trapped or fatally injured if reversing protection is not activated

If you close a side window again immediately after it has been blocked, the side window will close with increased or maximum force. The reversing function is then not active and body parts may become trapped.

- Make sure that no parts of the body are in the closing area.
- To stop the closing process, release the button or press the button again to reopen the side window.

YOU CANNOT OPEN OR CLOSE A SIDE WINDOW ALL THE WAY.

- Check to see if there are any objects in the window guide.
- Reset the side windows (→ page 204).

Panorama sliding sunroof

Notes on the panoramic sliding sunroof

In this section, the term "sliding sunroof" refers to the panoramic sliding sunroof.

WARNING
Risk of becoming trapped when the sliding sunroof is being opened and closed

Body parts may become trapped in the range of movement.

- During opening and closing, make sure that no body parts are in the range of movement.
- Release the button immediately if somebody becomes trapped.

or

- Briefly press the button in any direction during automatic operation.
  The opening or closing process will be stopped.

WARNING
Risk of children becoming trapped if they operate the sliding sunroof

Children could become trapped if they operate the sliding sunroof, particularly when unattended.

- Never leave children unattended in the vehicle.
- When leaving the vehicle, always lock the vehicle and take the key with you.

NOTE
Malfunction due to snow and ice

Snow and ice may cause the sliding sunroof to malfunction.

- Open the sliding sunroof only if it is free of snow and ice.

NOTE
Damage caused by protruding objects

Objects that protrude from the sliding sunroof may damage the seals.

- Do not allow anything to protrude from the sliding sunroof.

NOTE
Damage to on-board electronics caused by the ingress of water

Water may enter the vehicle interior when the sliding sunroof is being cleaned.

This may damage the on-board electronics.

► Clean the sliding sunroof only when it is closed.

When the sliding sunroof is open, resonance noise may also occur in addition to the usual airflow noises. This is caused by minor pressure fluctuations in the vehicle interior. To prevent or stop these noises, alter the position of the sliding sunroof or open a side window slightly.

SLIDING SUNROOF REVERSING FUNCTION
The sliding sunroof is equipped with an automatic reversing function. If a solid object prevents or hinders the closing process, the sliding sunroof will open again automatically. The automatic reversing function is only an aid and is not a substitute for paying attention when closing the sliding sunroof.

WARNING
Risk of becoming trapped even with the reversing feature active

IN PARTICULAR, THE REVERSING FUNCTION WILL NOT REACT:

- to soft, light and thin objects, e.g. fingers
- over the last 4 mm of the closing path
- during resetting
- when you close the sliding sunroof again manually immediately after automatic reversing

► During the closing process, make sure that no body parts are in the closing area.
► Release the button immediately if somebody becomes trapped.

or

► Press the button in any direction during the automatic closing process.
The closing process will be stopped.

Opening and closing the panorama sliding sunroof

Requirements

- The power supply is switched on.

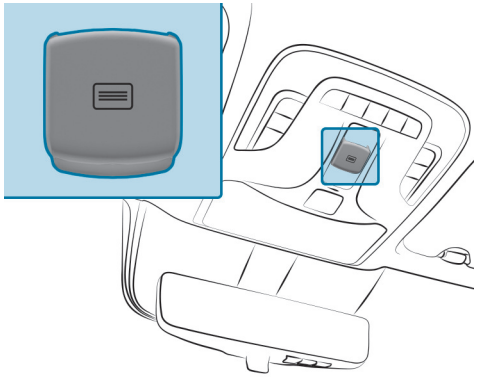

- **To raise (vent position):** press the button.
- **To open:** pull back the button.
- **To close and lower:** pull down the button.
- **To start automatic operation:** push or pull the button beyond the point of resistance and release it.
- **To stop automatic operation:** push or pull the button beyond the point of resistance and release it.

If you switch off the vehicle, you will still be able to operate the sliding sunroof. This function will remain available for a short time or until you open a front door.

WHEN THE POWER SUPPLY IS SWITCHED OFF, THE SLIDING SUNROOF WILL CLOSE AUTOMATICALLY IN THE FOLLOWING SITUATIONS:

- If it starts to rain
- In the event of extreme outside temperatures
- After six hours
- If there is a malfunction in the power supply

The sliding sunroof will remain raised at the rear to allow the vehicle interior to continue to be ventilated.

THE SLIDING SUNROOF WILL NOT CLOSE IN THE FOLLOWING SITUATIONS:

- If the sliding sunroof is raised at the rear.
- If the sliding sunroof is obstructed.
- If it is not raining on the field of the rain sensor on the windscreen because the vehicle is underneath a bridge, for example.

If the sliding sunroof closes via the rain closing function and is obstructed in the process, it will open again slightly. The rain closing function will then be disabled.

Opening and closing the roller sunblinds of the sliding sunroof

WARNING
Risk of becoming trapped when the roller sunblind is being opened and closed

Body parts may become trapped between the roller sunblind and frame or sliding roof.

- When opening or closing, make sure that no body parts are in the roller sunblind's range of movement.
- Release the button immediately if somebody becomes trapped.

or

- Briefly press the button in any direction during automatic operation.
  The opening or closing process will be stopped.

Requirements:

- The power supply is switched on.

REVERSING FUNCTION OF THE ROLLER SUNBLIND
You can open and close the roller sunblind only when the sliding sunroof is closed.

The roller sunblinds are fitted with an automatic reversing function. If a solid object prevents or hinders the closing process, the roller sunblind will open again automatically. The automatic reversing function is only an aid and is not a substitute for your attentiveness in the process of closing the roller sunblinds.

- When closing the roller sunblind, make sure that no body parts are in the range of movement.

WARNING
Risk of becoming trapped despite reversing function

IN PARTICULAR, THE REVERSING FUNCTION WILL NOT REACT:

- to soft, light and thin objects, e.g. fingers
- when you close the roller sunblind again manually immediately after automatic reversing

- When closing the roller sunblind, make sure that no body parts are in the range of movement.
- Release the button immediately if somebody becomes trapped.

or

- Press the button in any direction during the automatic closing process.
  The closing process will be stopped.

OPENING AND CLOSING ROLLER SUNBLINDS

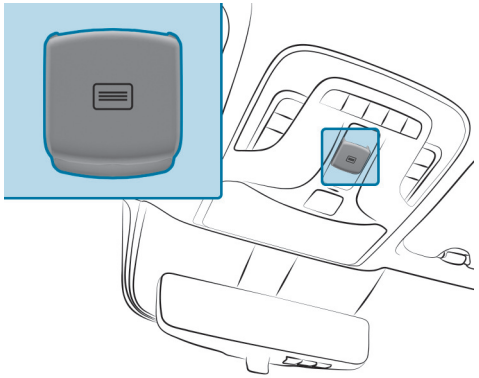

You can close the roller sunblinds only when the sliding sunroof is closed.

- **To open:** press the button.
  The roller sunblinds will open, and the sliding sunroof will then be raised into the vent position.

or

- Pull back the button.
  The roller sunblinds will open.
- **To close:** pull down the button.
  When the sliding sunroof is closed, the roller sunblinds will close.

If you push or pull the button beyond the point of resistance and release it, you will start automatic operation in the direction in question. You can stop automatic operation by pushing or pulling the button again.

OPENING AND CLOSING ROLLER SUNBLINDS FROM THE REAR

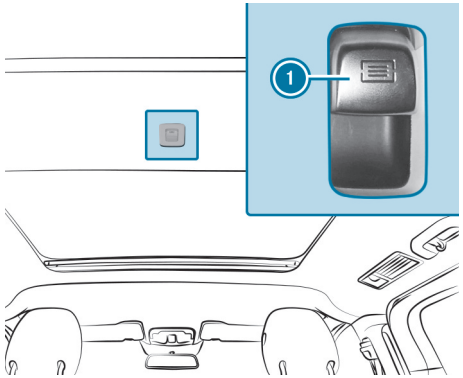

- Push or pull button 1 to the point of resistance and hold it until the roller sunblind or the sliding sunroof has reached the desired position.
- **Automatic operation:** push or pull button 1 beyond the point of resistance and release it.

With the sliding sunroof, a complete opening or closing process will always pass through "vent position", a fixed intermediate position. You will need to operate button 1 twice to execute a complete opening or closing process.

Rectifying problems with the sliding sunroof

WARNING
Risk of becoming trapped or fatal injuries when the sliding sunroof is closed again

If you close the sliding sunroof again immediately after it has been blocked or reset, the sliding sunroof will close with increased or maximum force.

There is a risk of becoming trapped or even of fatal injuries!

- Make sure that no parts of the body are in the closing area.
- Release the button immediately if somebody becomes trapped.

or

- Briefly press the button in any direction during the automatic closing process.
  The closing process will be stopped.

THE SLIDING SUNROOF CANNOT BE CLOSED AND YOU CANNOT DETECT THE CAUSE.
If the sliding sunroof is obstructed during closing and opens again slightly:

- Immediately after the sliding sunroof has been obstructed, pull the button down again to the point of resistance until the sliding sunroof is closed.
  The sliding sunroof will be closed with increased force.

If the sliding sunroof is obstructed again and opens again slightly:

- Immediately after the sliding sunroof has been obstructed, pull the button down again to the point of resistance until the sliding sunroof is closed.
  The sliding sunroof will be closed without the automatic reversing function.

Anti-theft prevention

Function of immobiliser

The immobiliser prevents your vehicle from being started without the correct key.

The immobiliser is automatically activated when the vehicle is switched off, and deactivated when the vehicle is switched on.

ATA (Anti-Theft Alarm system)

FUNCTION OF ATA (ANTI-THEFT ALARM SYSTEM)

IF THE ATA SYSTEM IS PRIMED, A VISUAL AND AUDIBLE ALARM IS TRIGGERED IN THE FOLLOWING SITUATIONS:

- when a door is opened
- when unlocking the vehicle with the emergency key
- when the bonnet is opened
- when the tailgate is opened
- vehicles with EASY-PACK tailgate: when opening the rear window
- when interior protection is triggered (⟶ page 213)
- when tow-away protection is triggered (⟶ page 212)

The alarm will not be deactivated, even if you immediately close the open door that has triggered it, forexample.

Cancelling a triggered alarm (⟶ page 211).

The ATA system is activated automatically approximately ten seconds after locking with the key.

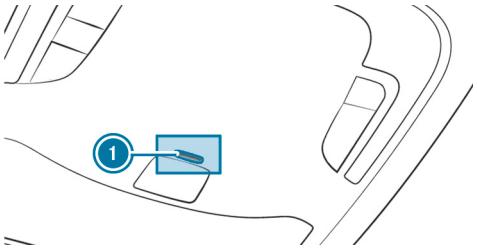

When the ATA system is primed, the indicator lamp (1) flashes in the overhead control panel.

ATA IS AUTOMATICALLY DEACTIVATED IN THE FOLLOWING SITUATIONS:

- after unlocking the vehicle with the key
- after pressing the start/stop button with the key inside the vehicle

PRIMING/DEACTIVATING THE ATA (ANTI-THEFT ALARM SYSTEM)

TO PRIME

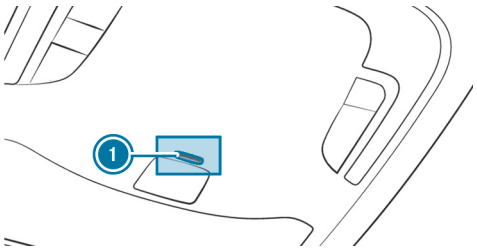

- Close all doors and the tailgate.

> Close the side windows and the panorama sliding sunroof or deactivate the interior protection (→ page 213) to prevent triggering of a false alarm.

- Lock the vehicle with the key. The indicator lamp (1) in the overhead control panel flashes.

TO SWITCH OFF

- Unlock the vehicle with the key. The indicator lamp (1) in the overhead control panel goes out.

> The vehicle locks again automatically if you do not open a door within 40 seconds after unlocking the vehicle.

TO CANCEL THE ALARM

- Press the button [ ], [ ] or [ ] on the key.

or

- Press the start/stop button with the key inside the vehicle.

Function of tow-away protection

When tow-away protection is primed, a visual and audible alarm is triggered if the vehicle's inclination changes. This may be the case, forexample, if the vehicle is lifted on one side.

Priming and deactivating tow-away protection

- **To activate:** lock the vehicle with the key.
  Tow-away protection is automatically primed after about 40 seconds:
- **To deactivate:** open the vehicle with the key.
  Tow-away protection is deactivated.

TOW-AWAY PROTECTION IS ACTIVATED IF THE FOLLOWING CONDITIONS ARE MET:

- The doors are closed.
- The tailgate is closed.

DEACTIVATING

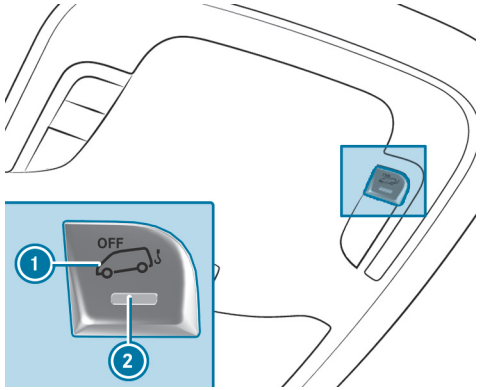

- Switch off the vehicle.
- Press the (1) button.
  When the button is released, the indicator lamp (2) in the button lights up for approximately three seconds.

- Lock the vehicle with the key.

  Tow-away protection is deactivated.

TOW-AWAY PROTECTION IS ACTIVATED AGAIN IN THE FOLLOWING CASES:

- The vehicle is unlocked again.
- A door is opened
- The vehicle is locked again.

DEACTIVATE TOW-AWAY PROTECTION WHEN LOCKING YOUR VEHICLE IN THE FOLLOWING SITUATIONS:

- when loading and/or transporting the vehicle on a ferry or car transporter, for example
- when parking the vehicle on a movable surface, suchas a split-level garage

Such objects may trigger false alarms.

Function of interior protection

A visual and acoustic alarm is triggered if the primed interior protection detects motion in the vehicle interior.

Depending on the respective equipment, the interior protection may be automatically deactivated temporarily if the stationary heater is switched on.

Priming and deactivating interior protection

TO PRIME

- Close the side windows.
- Ensure that no items (suchas mascots or clothes hangers) are hanging on the inside mirror or on the grab handles.

  False alarms will thus be prevented.
- Lock the vehicle with the key.

  The interior protection is primed after approximately 40 seconds.

THE INTERIOR PROTECTION IS ACTIVATED IF THE FOLLOWING CONDITIONS ARE MET:

- The doors are closed.
- The tailgate is closed.

TO SWITCH OFF

- Unlock the vehicle with the key.

  The interior protection automatically switches off.

TO DEACTIVATE

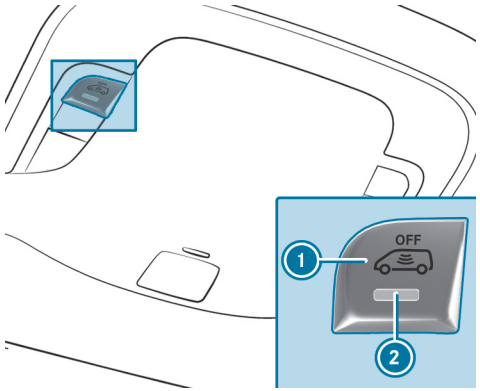

- Switch off the vehicle.
- Press the button ①.
  When the button is released, the indicator lamp ② in the button lights up for approximately three seconds.
- Lock the vehicle with the key.
  The interior protection is deactivated.

THE INTERIOR PROTECTION IS ACTIVATED AGAIN IN THE FOLLOWING CASES:

- The vehicle is unlocked again.
- A door is opened.
- The vehicle is locked again.

DEACTIVATE THE INTERIOR PROTECTION WHEN LOCKING YOUR VEHICLE IN THE FOLLOWING SITUATIONS:

- people or animals remain inside the vehicle
- if the side windows remain open
- when transporting the vehicle, forexample on a ferry or car transporter.

False alarms will thus be prevented.

Seats and stowage

This interactive PDF works like a website – tap or click a button to jump straight to where you want to go.
You can return here at any time via the navigation bar at the top left.

Notes on the correct driver's seat position
Notes on grab handles
Seats
Steering wheel
Stowage areas
Folding table
Folding the folding table in and out on the seat backrest
Information about the bottle holder
Cup holder
Ashtray and cigarette lighter
Sockets
Wirelessly charging the mobile phone and coupling with the exterior aerial
Notes on attaching the iPad®

Notes on the correct driver's seat position

WARNING
Risk of accident due to adjusting the vehicle settings while the vehicle is in motion

YOU COULD LOSE CONTROL OF THE VEHICLE IN THE FOLLOWING SITUATIONS IN PARTICULAR:

- if you adjust the driver's seat, the head restraint, the steering wheel or the mirror while the vehicle is in motion
- if you fasten your seat belt while the vehicle is in motion

▶ Before starting the vehicle: in particular, adjust the driver's seat, head restraint, steering wheel and mirror, and fasten your seat belt.

ENSURE THE FOLLOWING WHEN ADJUSTING STEERING WHEEL 1, SEAT BELT 2 AND DRIVER'S SEAT 3:

- You are sitting as far away from the driver's airbag as possible, taking the following points into consideration:
- You are sitting in an upright position.
- Your thighs are slightly supported by the seat cushion.
- Your legs are not fully extended and you can easily depress the pedals all the way.
- The back of your head is supported at eye level by the middle part of the head restraint.
- You can reach the steering wheel with your arms in a slightly bent position.
- You can move your legs freely.
- You can see all the indicators on the driver's display clearly
- You have a good overview of the traffic conditions.
- Your seat belt sits snugly against your body and passes across the centre of your shoulder and across your hips in the pelvic area.

Notes on grab handles

WARNING
Risk of injury due to excessive load on the grab handles

If you apply your full body weight to the grab handle or pull it abruptly, the grab handle may be damaged or come loose from its anchorage. This may result in injuries.

- Use the grab handles only to stabilise the seating position or to assist in getting in and out of the seat.

Seats

Adjusting the front seat manually

WARNING
Risk of accident due to adjusting the vehicle settings while the vehicle is in motion

YOU COULD LOSE CONTROL OF THE VEHICLE IN THE FOLLOWING SITUATIONS IN PARTICULAR:

- if you adjust the driver's seat, the head restraint, the steering wheel or the mirror while the vehicle is in motion
- if you fasten your seat belt while the vehicle is in motion

► Before starting the vehicle: in particular, adjust the driver's seat, head restraint, steering wheel and mirror, and fasten your seat belt.

WARNING
Risk of becoming clamped or sustaining an injury when adjusting or rotating a seat

When adjusting or rotating a seat, either yourself or a vehicle occupant could become clamped or sustain an injury, e.g. on the seat guide rail or on the swivel bracket of a seat.

► Ensure when adjusting or rotating a seat, that no body parts are within the seat's range of movement.

Observe the safety notes on "Airbags" and "Children in the vehicle".

WARNING
Risk of accident due to the driver's seat not being engaged

The driver's seat may move unexpectedly while driving.

This could cause you to lose control of the vehicle.

► Always make sure that the driver's seat is engaged before starting the vehicle.

WARNING
Risk of injury or death due to the front seat being positioned too close to the cockpit

The front airbags can also injure the occupants in the front of the vehicle.

- Always adjust the front seats so they are as far away as possible from the front airbags.
- In addition, observe the notes on correct seat adjustment.

WARNING
Risk of injury or death due to incorrect seat position

The seat belt will not offer the intended level of protection if you have not moved the seat backrest to an almost vertical position.

In particular, you may slip under the seatbelt and injure yourself.

- Adjust the seat properly before beginning your journey.
- Always ensure that the seat backrest is in an almost vertical position and that the shoulder section of your seat belt is routed across the centre of your shoulder.

WARNING
Risk of burns from hot amplifiers under the driver's seat

Vehicles with amplifiers under the driver's seat:

The amplifier can become hot during operation.

You could burn yourself if you touch the amplifier.

- Do not reach underneath the driver's seat.
- Adjust the driver's seat carefully.

WARNING
Risk of injury due to head restraints not being fitted or being adjusted incorrectly

If head restraints have not been installed or have not been adjusted correctly, there is an increased risk of injury in the head and neck area, e.g. in the event of an accident or when braking.

- Always drive with the head restraints fitted.
- Before driving off, make sure for every vehicle occupant that the centre of the head restraint supports the back of the head at about eye level.

Do not interchange the head restraints of the front and rear seats. Otherwise, you will not be able to adjust the heights and angles of the head restraints correctly.

Using the head restraint fore-and-aft adjustment, adjust the head restraint so that it is as close to the back of your head as possible.

NOTE
Damage to the seats and the seat heating due to fluids, pointed objects or insulating materials

To prevent damage to the seats and the seat heating, observe the following instructions:

- Do not spill any fluids onto the seats. If something does get spilt onto the seats, dry the seats as quickly as possible.
- Do not switch on the seat heating if the seat covers are wet or damp. Do not use the seat heating to dry the seats.
- Clean the seats as recommended; see the "Cleaning and care" section.
- Do not transport heavy loads on the seats. Do not place any sharp objects such as knives, nails or tools on the seats. If possible, use the seats only for people.
- When using the seat heating, do not cover the seats with insulating materials such as blankets, coats, bags, protective covers, child seats or booster seats.

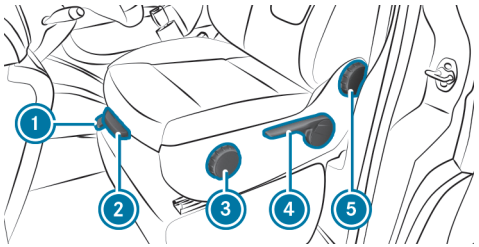

Adjusting the seat fore-and-aft position

- Pull the lever 1 upwards and slide the seat forwards or back until the desired position has been reached.
- Release the lever 1 and push the seat forwards or back until you hear the seat engage.

For rotating front seats, the lever in position 1 is used to release the rotating seat. The adjustment lever for the seat fore-and-aft position is in the form of a bar in front of the seat (→ page 222).

ADJUSTING THE SEAT HEIGHT

- Pull or push the lever 4 repeatedly until the desired seat height has been reached.

ADJUSTING THE SEAT BACKREST

- Turn the handwheel 5 forwards.
  The seat backrest will move to a vertical position.
- Turn the handwheel 5 backwards.
  The seat backrest will tilt back.

ADJUSTING THE SEAT CUSHION INCLINATION

- Turn the handwheel 3 forwards.
  The front of the seat cushion will tilt down.
- Turn the handwheel 3 backwards.
  The front of the seat cushion will tilt up.

ADJUSTING THE SEAT CUSHION LENGTH

- Pull the lever 2 upwards and slide the front part of the seat cushion forwards or backwards.

Adjusting the head restraint manually

WARNING
Risk of accident due to adjusting the vehicle settings while the vehicle is in motion

YOU COULD LOSE CONTROL OF THE VEHICLE IN THE FOLLOWING SITUATIONS IN PARTICULAR:

- if you adjust the driver's seat, the head restraint, the steering wheel or the mirror while the vehicle is in motion
- if you fasten your seat belt while the vehicle is in motion

▶ Before starting the vehicle: in particular, adjust the driver's seat, head restraint, steering wheel and mirror, and fasten your seat belt.

WARNING
Risk of injury due to head restraints not being fitted or being adjusted incorrectly

If head restraints have not been installed or have not been adjusted correctly, there is an increased risk of injury in the head and neck area, e.g. in the event of an accident or when braking.

▶ Always drive with the head restraints fitted.

▶ Before driving off, make sure for every vehicle occupant that the centre of the head restraint supports the back of the head at about eye level.

Do not interchange the head restraints of the front and rear seats. Otherwise, you will not be able to set the height and inclination of the head restraints to the correct position.

Adjust the head restraint fore-and-aft position so that it is as close as possible to the back of your head.

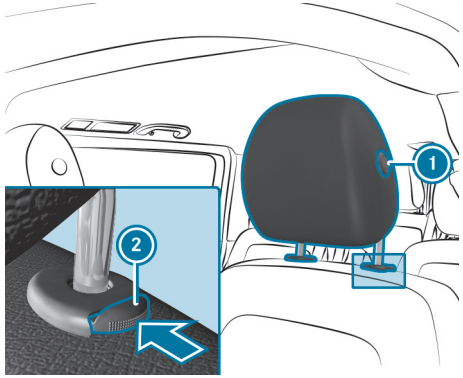

▶ **To raise:** pull the head restraint upwards into the desired position and ensure that it engages.

▶ **To lower:** press release knob ②, slide the head restraint downwards into the desired position and ensure that it engages.

▶ **To move forwards or backwards:** press release knob ① and pull the head restraint forwards or push it backwards until it engages in the desired position.

▶ **To remove:** press release knob ② and pull the head restraint up and out.

▶ **To fit:** press the head restraint with detent on the left-hand side when viewed in the direction of travel into the holes until it engages.

Rotating the front seats

WARNING
Risk of injury or fatal injuries if the driver's seat and front passenger seat are not engaged

In this situation, the restraint systems cannot perform their intended protective function.

► Engage the driver's seat and front passenger seat in the direction of travel before you start the vehicle.

WARNING
Risk of accident due to adjusting the vehicle settings while the vehicle is in motion

YOU COULD LOSE CONTROL OF THE VEHICLE IN THE FOLLOWING SITUATIONS IN PARTICULAR:

- if you adjust the driver's seat, the head restraint, the steering wheel or the mirror while the vehicle is in motion
- if you fasten your seat belt while the vehicle is in motion

► Before starting the vehicle: in particular, adjust the driver's seat, head restraint, steering wheel and mirror, and fasten your seat belt.

WARNING
Risk of becoming clamped or sustaining an injury when adjusting or rotating a seat

When adjusting or rotating a seat, either yourself or a vehicle occupant could become clamped or sustain an injury, e.g. on the seat guide rail or on the swivel bracket of a seat.

► Ensure when adjusting or rotating a seat, that no body parts are within the seat's range of movement.

NOTE
Damage to the seats due to colliding with adjacent car parts

When you rotate the seats, they may collide with adjacent car parts.

This can damage the seats.

► When you rotate the seats, make sure there is sufficient clearance.

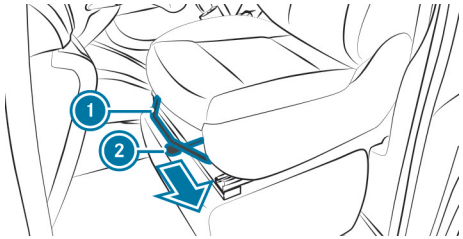

You can rotate the driver's and front passenger seats by 50° and 180°. The seats engage both in and opposite to the direction of travel as well as at 50° towards the exit.

- When you rotate the seat, open the respective front door to avoid a collision with the door trim.
- Adjust the steering wheel in such a way that there is sufficient clearance to rotate and adjust the driver's seat (→ page 265).
- Push lever ② in the direction of the arrow.
  The turning device will be unlocked.
- Rotate the seat in the desired direction.
- If there is a risk of collision with the centre console or the B-pillar, pull lever ① upwards and move the front seat forwards or backwards into the desired position. Then release lever ①.
- In the desired position, make sure that the seat has engaged in the direction of rotation and the longitudinal direction.

Adjusting the front seat electrically

WARNING
Risk of accident due to adjusting the vehicle settings while the vehicle is in motion

YOU COULD LOSE CONTROL OF THE VEHICLE IN THE FOLLOWING SITUATIONS IN PARTICULAR:

- if you adjust the driver's seat, the head restraint, the steering wheel or the mirror while the vehicle is in motion
- if you fasten your seat belt while the vehicle is in motion

- Before starting the vehicle: in particular, adjust the driver's seat, head restraint, steering wheel and mirror, and fasten your seat belt.

WARNING
Risk of becoming trapped if the seat is adjusted by children

Children could become trapped if they adjust the seats, particularly if they are unattended.

- When leaving the vehicle, always take the key with you and lock the vehicle.
- Never leave children unattended in the vehicle.

The seats can be adjusted when the vehicle is switched off and with a door open.

WARNING
Risk of becoming trapped if the seats are adjusted

When adjusting a seat, you may trap yourself or a vehicle occupant, e.g. on the seat guide rail.

- Make sure that no part of the body is within the seat's range of motion when adjusting a seat.

Observe the safety notes on "Airbags" and "Children in the vehicle".

WARNING
Risk of injury or death due to the front seat being positioned too close to the cockpit

The front airbags can also injure the occupants in the front of the vehicle.

- Always adjust the front seats so they are as far away as possible from the front airbags.
- In addition, observe the notes on correct seat adjustment.

WARNING
Risk of injury or death due to incorrect seat position

The seat belt will not offer the intended level of protection if you have not moved the seat backrest to an almost vertical position.

In particular, you may slip under the seatbelt and injure yourself.

- Adjust the seat properly before beginning your journey.
- Always ensure that the seat backrest is in an almost vertical position and that the shoulder section of your seat belt is routed across the centre of your shoulder.

WARNING
Risk of burns from hot amplifiers under the driver's seat

Vehicles with amplifiers under the driver's seat:

The amplifier can become hot during operation.

You could burn yourself if you touch the amplifier.

- Do not reach underneath the driver's seat.
- Adjust the driver's seat carefully.

WARNING
Risk of injury due to head restraints not being fitted or being adjusted incorrectly

If head restraints have not been installed or have not been adjusted correctly, there is an increased risk of injury in the head and neck area, e.g. in the event of an accident or when braking.

- Always drive with the head restraints fitted.
- Before driving off, make sure for every vehicle occupant that the centre of the head restraint supports the back of the head at about eye level.

Do not interchange the head restraints of the front and rear seats. Otherwise, you will not be able to set the height and inclination of the head restraints to the correct position.

Using the head restraint fore-and-aft adjustment, adjust the head restraint so that it is as close to the back of your head as possible.

NOTE
Damage to the seats and the seat heating due to fluids, pointed objects or insulating materials

To prevent damage to the seats and the seat heating, observe the following instructions:

- Do not spill any fluids onto the seats. If something does get spilt onto the seats, dry the seats as quickly as possible.
- Do not switch on the seat heating if the seat covers are wet or damp. Do not use the seat heating to dry the seats.
- Clean the seats as recommended; see the "Cleaning and care" section.
- Do not transport heavy loads on the seats. Do not place any sharp objects such as knives, nails or tools on the seats. If possible, use the seats only for people.
- When using the seat heating, do not cover the seats with insulating materials such as blankets, coats, bags, protective covers, child seats or booster seats.

Requirements

- The vehicle is switched on or the door is open.

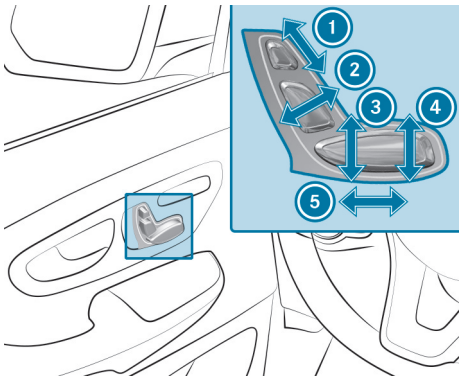

1. Head restraint height adjustment
2. Seat backrest inclination adjustment
3. Seat height adjustment
4. Seat cushion inclination adjustment
5. Seat fore-and-aft position adjustment

► Adjust the seat using buttons 1 to 5 on the door trim.

If you have already switched off the vehicle, you can still adjust the seats for about 30 seconds after unlocking the vehicle, e.g. to allow you to get out easily.

ⓘ **Vehicles with PRE-SAFE®:** if PRE-SAFE® intervenes, the front passenger seat will automatically be adjusted from a less favourable position into one that offers better protection. It will be possible to re-adjust the front passenger seat only once the hazardous situation is over. Information about the system can be found under "PRE-SAFE® System" (⟶ page 141).

ⓘ You can save the settings for the seat with the memory function (⟶ page 228).

Adjusting the head restraint electrically

⚠ **WARNING**
Risk of accident due to adjusting the vehicle settings while the vehicle is in motion

YOU COULD LOSE CONTROL OF THE VEHICLE IN THE FOLLOWING SITUATIONS IN PARTICULAR:

- if you adjust the driver's seat, the head restraint, the steering wheel or the mirror while the vehicle is in motion
- if you fasten your seat belt while the vehicle is in motion

► Before starting the vehicle: in particular, adjust the driver's seat, head restraint, steering wheel and mirror, and fasten your seat belt.

WARNING
Risk of injury due to head restraints not being fitted or being adjusted incorrectly

If head restraints have not been installed or have not been adjusted correctly, there is an increased risk of injury in the head and neck area, e.g. in the event of an accident or when braking.

- Always drive with the head restraints fitted.
- Before driving off, make sure for every vehicle occupant that the centre of the head restraint supports the back of the head at about eye level.

Adjust the mechanical head restraint fore-and-aft position so that it is as close as possible to the back of your head.

NOTE
Damage to the electrical head restraint when adjusted manually

If the height of the electrically adjustable head restraint is adjusted manually, this can damage the mechanism of the head restraint.

- Adjust the height of the electrically adjustable head restraints using the buttons in the door trim.

Requirements:

- The vehicle is switched on or the door is open.

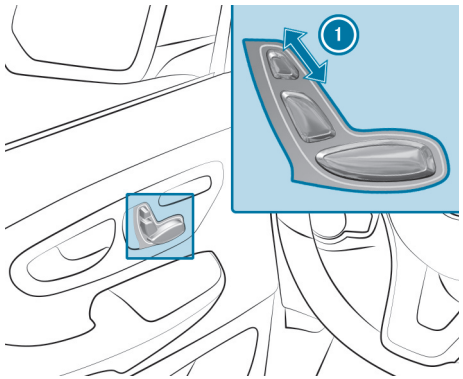

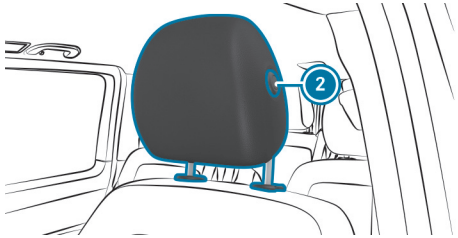

- **To adjust the height:** push button 1 up or down in the direction of the arrow.
- **To move forwards or backwards:** press release knob 2 and pull the head restraint forwards or push it backwards until it engages in the desired position.

If the vehicle is not switched on, you can adjust the head restraint height within 30 seconds of unlocking the vehicle.

Setting 4-way lumbar support

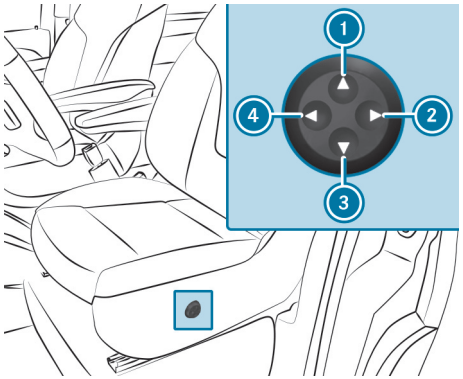

1. Higher
2. Softer
3. Lower
4. Firmer

- Use buttons 1 to 4 adjust the backrest contour individually to your spine.

Adjusting armrests

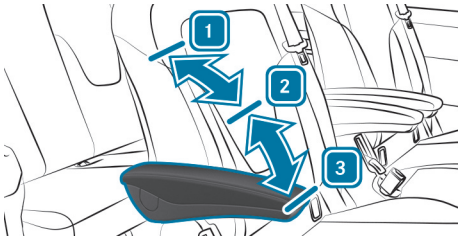

- Fold the armrest upwards more than 45° in position 2.
  The armrest will be unlocked.
- Fold the armrest forwards 3 as far as it will go.
- Slowly fold the armrest upwards into the required position.
- **To fold the armrest upwards:** if necessary, fold the armrest upwards more than 90° in position 1.

ⓘ Your vehicle may be equipped with armrests on the front seats and in the rear.

Operating the memory function

⚠ **WARNING**
Risk of an accident if the memory function is used while driving

If you use the memory function on the driver's side while driving, you could lose control of the vehicle as a result of the adjustments being made.

- Only use the memory function on the driver's side when the vehicle is stationary.

WARNING
Risk of entrapment when adjusting the seat with the memory function

When the memory function adjusts the seat, you and other vehicle occupants – particularly children – could become trapped.

- During the adjustment process of the memory function, make sure that no one has any body parts in the sweep of the seat.
- If somebody becomes trapped, immediately release the memory function position button.
  The adjustment process is stopped.

WARNING
Danger of entrapment when memory function is activated by children

When children activate the memory function, they can get trapped, especially if they are unsupervised.

- Never leave children unattended in the vehicle.
- When leaving the vehicle, always take the key with you and lock the vehicle.

The memory function can be used when the vehicle is switched off.

NOTE
Damage to the seat when moving it to a stored position

If the seat is moved from the reclined position to a stored seat position, it may collide with other vehicle parts.

This may damage the seat.

- Set the seat backrest upright to a stored position before driving.

STORING SEAT ADJUSTMENTS

Seat adjustments for up to three people can be stored and called up using the memory function.

THE FOLLOWING SETTINGS ARE STORED AS A SINGLE MEMORY PRESET:

- the seat position, seat backrest and head restraint position
- additionally, for the driver's side, the position of both outside mirrors

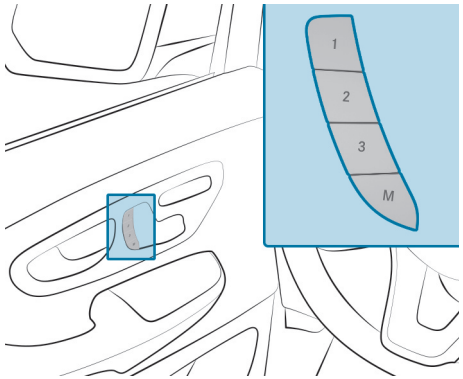

- Adjust the seat as desired.

- Adjust the outside mirrors as desired.
- Press the memory button M and then press the memory position button 1, 2 or 3 within three seconds.
  An acoustic signal sounds. The settings are stored.
- **To call up:** press and hold the preset position button 1, 2 or 3 until the seat and the outside mirrors are in the stored position.

Switching the seat heating on and off

WARNING
Risk of burns due to repeatedly switching on the seat heating

Repeatedly switching on the seat heating can cause the seat cushion and seat backrest padding to become very hot.

In particular, the health of persons with limited temperature sensitivity or a limited ability to react to high temperatures may be affected or they may even suffer burn-like injuries.

- Do not repeatedly switch on the seat heating.

To protect against overheating, the seat heating may be temporarily deactivated after it has been switched on repeatedly.

NOTICE
Risk of damage to the seats caused by objects or seat backrests folded forwards when the seat heating is switched on

If the seat heating is switched on, heat build-up may occur due to objects placed on the seat or if the seat backrest is folded forwards.

This may in turn cause damage to the seat surface.

- Do not switch on the seat heating when the seat backrest is folded forwards.
- Make sure that there are no objects (e.g. seat cushions or child seats) on the seats when the seat heating is switched on.

Requirements

- The power supply is switched on.

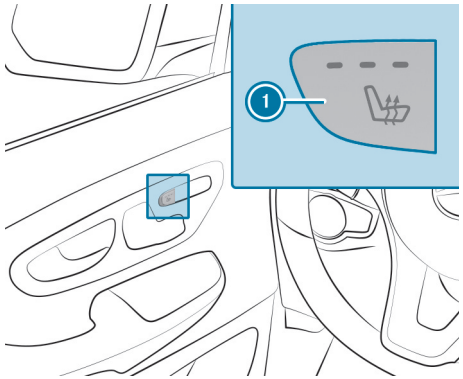

Front seat

- **To activate:** press the button (1).
  All indicator lamps on the button will light up.
- **To lower the level:** press the button (1) until the required heating level is reached.
  Depending on the heating level, one to three indicator lamps will light up.
- **To switch off:** press the button (1) until all indicator lamps are off.

ⓘ The seat heating will automatically switch down from the three heating levels after 8, 10 and 20 minutes until the seat heating is switched off.

Switching the seat ventilation on and off

Requirements

- The power supply is switched on.

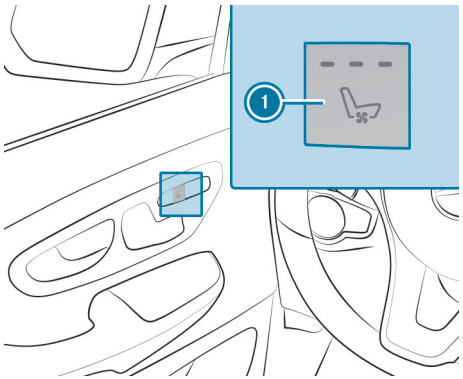

- Make sure that the air inlet grilles on the back of the seat backrest are not covered.
- **To switch on/increase the level:** press the button (1) repeatedly until the desired blower setting is set.
  Depending on the blower setting, one to three indicator lamps will light up.
- **To switch off/reduce the level:** press the button (1) repeatedly until the desired blower setting is set.
  If all indicator lamps are off, the seat ventilation is switched off.

ⓘ The convenience opening function automatically switches the seat ventilation for the driver's seat to the highest blower setting (⟶ page 70).

Notes on seat anchorage in the rear passenger compartment

YOUR VEHICLE MAY BE EQUIPPED WITH THE FOLLOWING SEATS AND BENCH SEATS IN THE REAR PASSENGER COMPARTMENT:

- Standard rear seat
- Luxury rear seat
- Comfort rear bench seat
- Seat/bunk combination

SEAT ANCHORAGE

WARNING
Risk of accident- and injury if the seat is not engaged

If a seat is not engaged, it may be thrown about while the vehicle is moving.

► Always make sure that all seats are engaged as described.

WARNING
Risk of accident and injury as a result of rear bench seat not being engaged

If the rear bench seat is not engaged, it may be flung around during travel.

► Always make sure that the rear bench seat is engaged as described.

In order to ensure that the seats can securely engage, keep the seat guide rails and anchorages in the vehicle floor free of dirt and foreign objects.

If the indicator tabs on the rear seat bases are not fully retracted into the seat base, the seat is not correctly engaged. Engage the seat again.

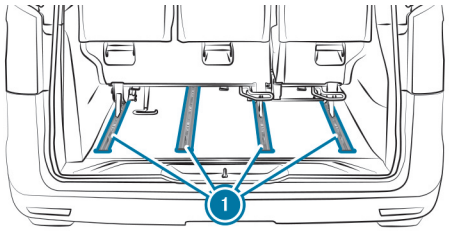

Example: seat rail system with quick-locking mechanism

GUIDE RAILS ① OF THE SEAT RAIL SYSTEM CAN BE USED FOR THE FOLLOWING PURPOSES:

- For mounting up to two rear seat rows
- For mounting both rear seat rows facing one another
- For mounting rear seats and rear bench seats
- For moving rear seats and rear bench seats

ⓘ When you remove a rear bench seat or a seat, the seat slider may slide into a guide rail. The seat sliders will then no longer be parallel in the guide rails. In this case, you will no longer be able to fit the respective seating. The seat sliders must be moved only using a special tool or at a qualified specialist workshop in order to prevent the risk of damage. The tool is available as a Mercedes-Benz accessory or as part of a seat/bunk combination.

Notes on seating variants

WARNING
Risk of injury due to incorrect installation of the rear bench seats

Incorrect installation of the rear bench seats means that the integrated safety precautions in the rear bench seats cannot protect as they are designed to do.

- Install the rear bench seats only as described.
- Use only rear bench seats approved for your vehicle.

WARNING
Risk of injury due to incorrect installation of the rear bench seat

If you do not install the rear seats as described, the safety precautions integrated in the rear seats will not be able to protect you as intended.

- Install the rear seats as described.
- Use only rear seats that are approved for your vehicle.

WARNING
Risk of injury or death due to unsuitable seats with seat-integrated seat belts

If an installed rear seat is not approved for your vehicle, the restraint system components may not function as intended in the event of an accident. This may be the case, for example, when installing a seat from another vehicle.

- Install only rear seats that were delivered with the vehicle from the factory or which have been approved for your vehicle by Mercedes-Benz.

The electrical connector of the rear seats must be inserted into the floor socket provided for this purpose.
(⟶ page 238)Check correct installation and the electrical connectors of all rear seats.

DEPENDING ON THE TYPE OF SEAT ANCHORAGE IN THE VEHICLE FLOOR, YOU CAN INSTALL THE FOLLOWING SEATING VARIANTS:

- Rear bench seats with two or three seats
- Single rear seats
- Seat/bunk combination with three seats

Depending on the respective vehicle equipment, you can fit the rear bench seats and the rear seats on the second and/or third seat rows.

The seating variants shown are permitted only if the conditions specified below for safe rear seating are met. Other seating variants are not permitted and may jeopardise occupant safety.

When only the individual seats are used, the rear seats can be installed facing in the direction of travel in all combinations and configurations.

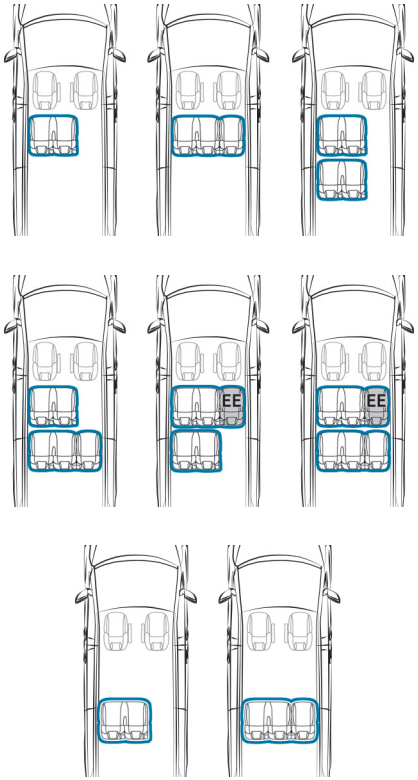

Seating variants facing in the direction of travel

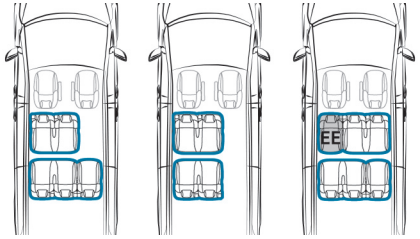

Seating variants for the rear bench seats in the face-to-face position

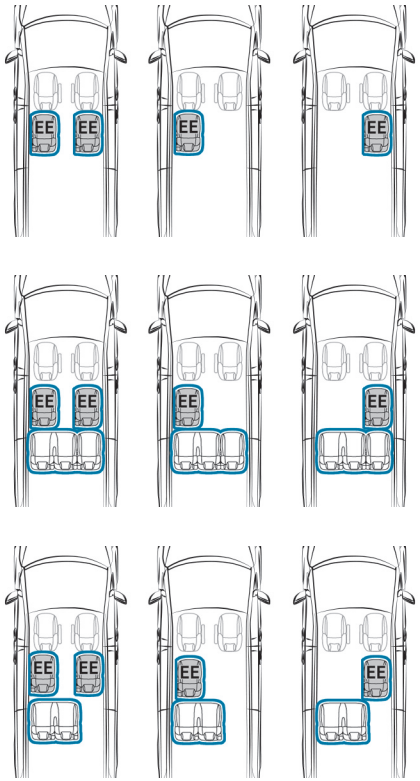

Seating variants for the rear seats and rear bench seats facing in the direction of travel

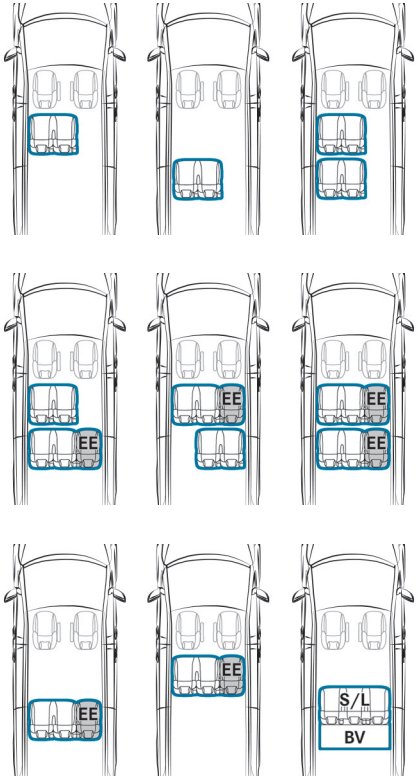

Seating variants for the rear bench seats facing in the direction of travel

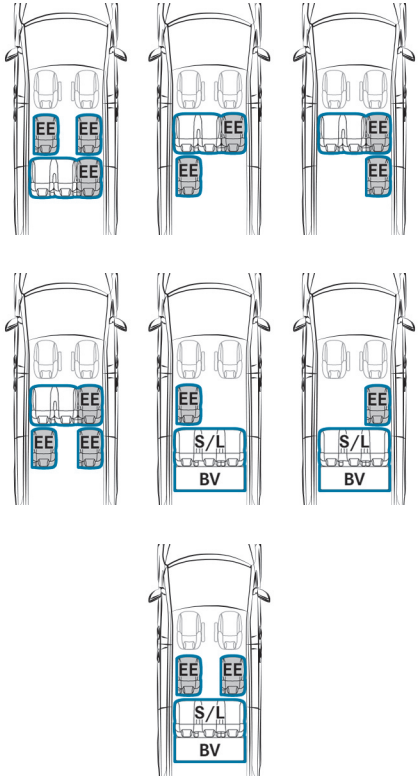

Seating variants for the rear seats and rear bench seats facing in the direction of travel, part 2

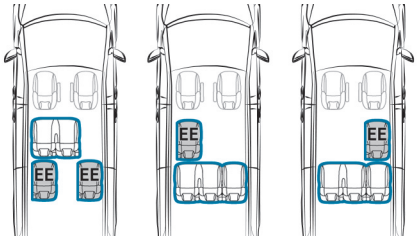

Seating variants for the rear seats and rear bench seats facing in the direction of travel, part 1

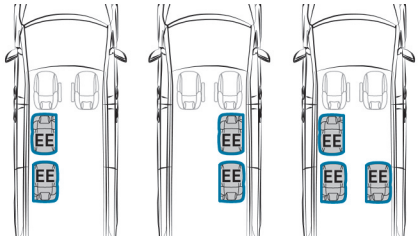

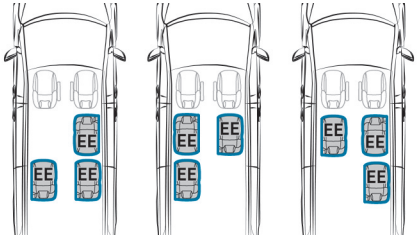

Seating variants in the face-to-face position, part 1

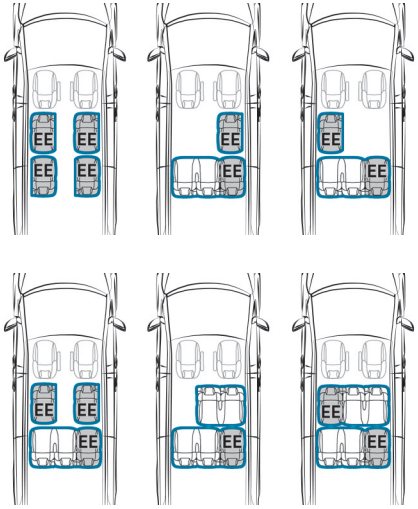

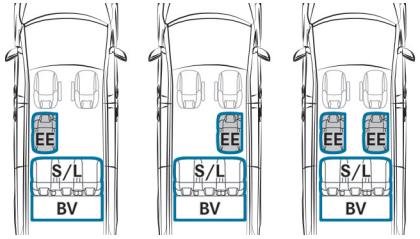

Seating variants in the face-to-face position, part 2

EE Easy entry and exit feature – EASY-ENTRY
S/L Seat/bunk combination
BV Bed extension

If a rear bench seat or a rear seat is marked with EE in the illustrations, a rear bench seat or a rear seat must be fitted with the EASY-ENTRY easy entry and exit feature in the position indicated.

If a rear bench seat is not marked, a rear bench seat can be fitted with or without the EASY-ENTRY feature in the position indicated.

PLEASE OBSERVE THE FOLLOWING CONDITIONS FOR SAFE REAR SEATING:

- Use only rear seats and rear bench seats approved for your vehicle.
- A rear seat or rear bench seat may be fitted facing the rear only if each seat has a seat opposite it – face-to-face position.
- Vehicles with a seat rail system in the vehicle floor:
  - You may install the seat/bunk combination (S/L) only in the third seat row.
  - The seat/bunk combination (S/L) may not be installed in combination with bench seats.
- Passengers may use the seats only if the rear seat and/or rear bench seat has engaged correctly (⟶ page 241).

Notes on rear seat monitoring and the rear seat restraint system

WARNING
Risk of injury due to malfunctions in the restraint system

Components in the restraint system may be activated unintentionally or not deploy as intended in an accident.

- Have the restraint system checked and repaired immediately at a qualified specialist workshop.

WARNING
Risk of injury due to malfunction of the rear seat monitoring system

If the restraint system of a rear seat is malfunctioning, the driver will be warned by a corresponding display message.

In the event of a malfunction of the rear seat monitoring system, the restraint system of another rear seat may also be malfunctioning.

- Check the correct installation and the electrical connectors of all rear seats.
- If the malfunction of the restraint system of a seat in the second or third seat row persists, do not use any seat in either seat row.
- Have the restraint system and the rear seat monitoring system checked and repaired immediately at a qualified specialist workshop.

If the restraint system of a rear seat is faulty, the driver display will show a corresponding display message (→ page 765).

WARNING
Risk of injury or death due to unsuitable seats with seat-integrated seat belts

If an installed rear seat is not approved for your vehicle, the restraint system components may not function as intended in the event of an accident. This may be the case, for example, when installing a seat from another vehicle.

- Install only rear seats that were delivered with the vehicle from the factory or which have been approved for your vehicle by Mercedes-Benz.

The electric connector coupling of the rear seats must be inserted into the floor socket provided for this purpose.

NOTE
Damage to the rear seat electrical system due to improper connection of the rear seats.

If the electrical connector is not plugged into the floor socket assigned to the respective rear seat, the cable, plug and floor socket may be damaged.

- Only use the floor socket that is located almost under the respective rear seat.
- Do not connect the cables in a diagonal pattern.
- Do not pull on the cable with force.

NOTES ON REAR SEAT MONITORING:

- The position of a rear seat installed in the vehicle is detected and monitored by the vehicle via a radio signal and the electrical connector in the floor socket.
- If the battery for the transmission of the radio monitoring system is low, a message will be shown on the driver display. Consult a qualified specialist workshop.
- Detected errors are shown on the driver display on the status display (⟶ page 135) and/or as a display message (⟶ page 765).

NOTES ON OPERATING THE ELECTRICAL CONNECTOR:

- When connecting the cable of a rear seat to the socket in the vehicle, use the floor socket located almost under the respective rear seat.

  If you fold the rear seats forwards, you will be able to access the floor socket on the third row of seats more easily.

  The cable must not be excessively stretched in the process.
- If you disconnect the cable of a rear seat from the socket in the vehicle, insert the plug into the parking socket provided for this purpose at the rear of the rear seat.
- Protect the electrical connector from external power sources. Otherwise, malfunctions may occur or the seat belt tensioner may be triggered.
- When loading the vehicle, take care not to damage the cables.

NOTES ON STORING REAR SEATING THAT HAS BEEN REMOVED:

- Do not store rear seats in the open air; ensure that they are protected from environmental influences (e.g. moisture).
- Store rear seats out of reach of animals, especially rodents.

DISPOSAL NOTES FOR SEAT BELT TENSIONERS WITH PYROTECHNICS:

- Contact a qualified specialist workshop for proper disposal/recycling of a rear seat that has been removed.

  It is not permissible to continue using a rear seat with seat belt tensioner for purposes other than those for which it is intended before the pyrotechnics have been defused.

Removing and inserting the rear seating electrical connector

⚠ **WARNING**
Risk of injury due to malfunction of the rear seat monitoring system

If the restraint system of a rear seat is malfunctioning, the driver will be warned by a corresponding display message.

In the event of a malfunction of the rear seat monitoring system, the restraint system of another rear seat may also be malfunctioning.

► Check the correct installation and the electrical connectors of all rear seats.

► If the malfunction of the restraint system of a seat in the second or third seat row persists, do not use any seat in either seat row.

► Have the restraint system and the rear seat monitoring system checked and repaired immediately at a qualified specialist workshop.

REMOVING

REQUIREMENTS

- The vehicle is switched off.

When removing and installing the rear seating, observe the routing of cables and their original installation positions. Otherwise, you may damage the cables and the rear seat monitoring may be impaired.

Have luxury rear seats removed and installed at a qualified specialist workshop.

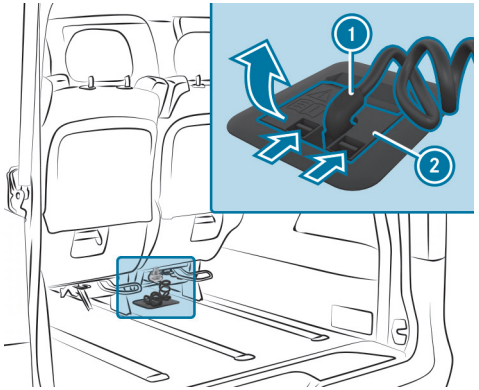

► Press flap locks 2 in the direction of the arrow and swing flap 2 upwards.
The plug 1 is pulled out automatically when the flap 2 opens.

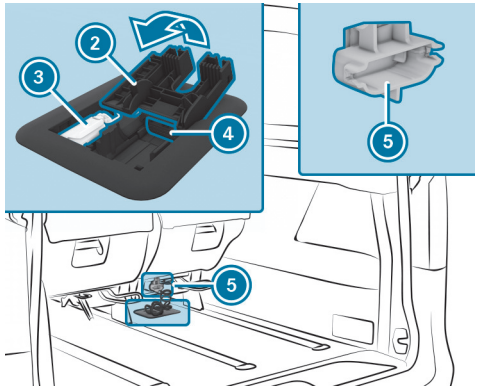

► Fit the white protective cap 3 onto the connection 4 in the floor socket.

► Swing flap 2 down and close it.

► Insert the plug 1 into the yellow park socket 5 on the rear seat.

INSTALLING

REQUIREMENTS

- The vehicle is switched off.
- The floor socket is open.
- Protective cap 3 is removed.

WARNING
Risk of injury or death due to unsuitable seats with seat-integrated seat belts

If an installed rear seat is not approved for your vehicle, the restraint system components may not function as intended in the event of an accident. This may be the case, for example, when installing a seat from another vehicle.

- Install only rear seats that were delivered with the vehicle from the factory or which have been approved for your vehicle by Mercedes-Benz.

The electric connector coupling of the rear seats must be inserted into the floor socket provided for this purpose.

- (⟶ page 237)Check the correct installation and the electrical connectors of all rear seats.

NOTE
Damage to the rear seat electrical system due to improper connection of the rear seats.

If the electrical connector is not plugged into the floor socket assigned to the respective rear seat, the cable, plug and floor socket may be damaged.

- Only use the floor socket that is located almost under the respective rear seat.
- Do not connect the cables in a diagonal pattern.
- Do not pull on the cable with force.

Your vehicle is equipped with a floor socket for the electrical connection of the rear seats for each installation position of the rear seats in the second and third seat rows on the left and right respectively.

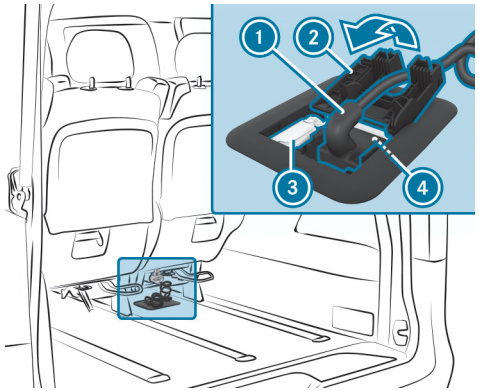

- Observe the notes on rear seat monitoring and the rear seat restraint system (⟶ page 237).
- Guide plug cable ① through the cutout of flap ②.
- Position plug ① in the floor box in front of outlet ④.
- Swing the flap ② downwards so that it audibly engages.
  Plug ① will be pushed into outlet ④ when flap ② is closed.
- Ensure that the flap ② is locked. In its locked position, the flap ② cannot be lifted without first pressing the locks.
- Switch on the vehicle and ensure that all rear seats installed in the vehicle are detected correctly (⟶ page 135).

Rear seat

USING THE EASY-ENTRY EASY ENTRY AND EXIT FEATURE (REAR SEAT)

WARNING
Risk of accident- and injury if the seat is not engaged

If a seat is not engaged, it may be thrown about while the vehicle is moving.

- Always make sure that all seats are engaged as described.

In order to ensure that the seats can securely engage, keep the seat guide rails and anchorages in the vehicle floor free of dirt and foreign objects.

If the indicator tabs on the rear seat anchorages are not fully retracted into the seat base, the seat is not correctly engaged. Engage the seat again.

WARNING
Risk of becoming trapped when adjusting the seats

When you adjust a seat, you may trap yourself or a vehicle occupant.

- When adjusting a seat, make sure that no one has any body parts in the sweep of the seat.

WARNING
Risk of becoming trapped if the seat is not engaged

The seat does not engage when folded forwards. The seat can fold backwards unexpectedly, e.g. when accelerating, braking or in the event of an abrupt change of direction or an accident.

People in the seat's sweep can become trapped.

- If a seat is folded forwards, always fold it back before driving off.
- Make sure that the seat is engaged.

If you fold the rear seat forwards, it will be easier for you to get in and out of the vehicle.

FOLDING THE REAR SEAT FORWARDS

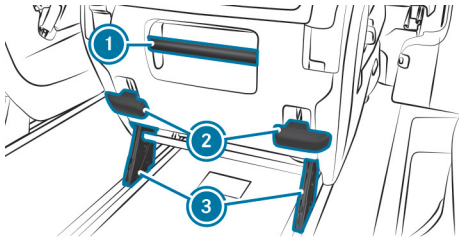

Standard rear seat

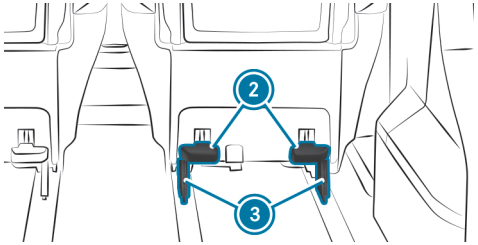

Luxury rear seat

1. Grab handle
2. EASY-ENTRY release handles
3. Indicator tabs on the rear seat anchorages

Use the grab handle to fold the standard rear seat forwards and backwards 1.

Hold the outside of the backrest to fold the luxury rear seat forwards and backwards.

- **Luxury rear seat:** make sure that the rear seat is in the upright position and the leg rest is fully folded under the sitting surface. .
- Pull one of two EASY-ENTRY release handles 2 upwards and fold the rear seat forwards.

FOLDING BACK THE REAR SEAT

- Fold the rear seat backwards.

OPERATING THE STANDARD REAR SEAT

ADJUSTING THE SEAT BACKREST

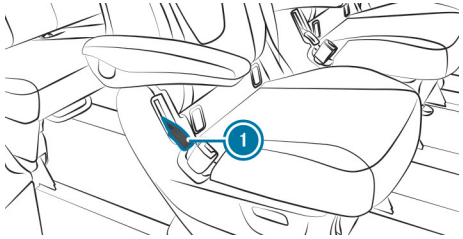

- Pull release handle 1 upwards and hold it in place.
- Move the seat backrest to the desired position.
- Let go of release handle 1 and move the seat backrest slightly.
  The seat backrest will engage in position.

FOLDING THE SEAT BACKRESTS TO THE TABLE POSITION

- Fold up the armrests (→ page 228).
- Pull release handle 1 upwards and fold the seat backrest forwards.

FOLDING THE REAR SEAT FORWARDS

WARNING
Risk of becoming trapped if the seat is not engaged

The seat does not engage when folded forwards. The seat can fold backwards unexpectedly, e.g. when accelerating, braking or in the event of an abrupt change of direction or an accident.

People in the seat's sweep can become trapped.

- If a seat is folded forwards, always fold it back before driving off.
- Make sure that the seat is engaged.

WARNING
Risk of accident- and injury if the seat is not engaged

If a seat is not engaged, it may be thrown about while the vehicle is moving.

- Always make sure that all seats are engaged as described.

In order to ensure that the seats can securely engage, keep the seat guide rails and anchorages in the vehicle floor free of dirt and foreign objects.

If the indicator tabs on the rear seat anchorages are not fully retracted into the seat base, the seat is not correctly engaged. Engage the seat again.

NOTE
Damage to the folding table or the armrest when the rear seats are folded forwards or backwards

If the folding table is not positioned all the way back when the rear seats are folded forwards or backwards, the folding table and/or the armrest of the rear seat may be damaged.

- Slide the folding table all the way back before folding the rear seats forwards or backwards.

NOTE
Damage to the cup holder by the rear seat

The cup holder may be damaged when the rear seat of the third seat row is folded forwards.

- Remove the cup holder before folding the seat forwards.

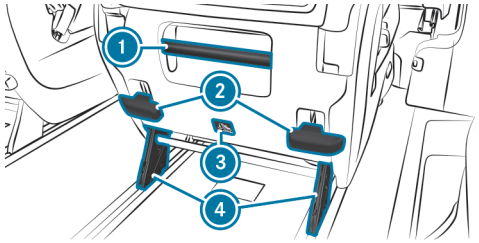

1. Grab handle
2. EASY-ENTRY release handles
3. Pictogram
4. Indicator tabs on the rear seat anchorages

Use the grab handle to fold the rear seat forwards and backwards (1).

ⓘ Pictogram ③ on the seat reminds you not to travel sitting behind a seat that has been folded forwards.

- Slide the folding table to its rearmost position (→ page 271).
- Remove the head restraint (→ page 221).
- Fold the seat backrest forwards into the table position.
- Pull one of release handles ② upwards.
- Fold the rear seat forwards.

FOLDING BACK THE REAR SEAT

- Pull the rear seat backwards.
- Install the head restraint and adjust it (→ page 221).

MOVING THE REAR SEAT

⚠ **WARNING**
Risk of injury due to moving the rear seat while the vehicle is in motion

If you move a rear seat while driving, the seat may move in an unexpected or jerking manner, forinstance when braking.

You could become trapped as well as thrown against parts of the vehicle or other vehicle occupants.

- Move a rear seat only when the vehicle is stationary.
- Make sure that the rear seat is engaged after it is moved.

⚠ **WARNING**
Risk of injury due to no protective effect from the window airbag

If you move the seat position outside the marked area, the window airbag can no longer provide optimum protection.

The protective effect of the window airbag is gradually reduced and may in some positions no longer be provided at all.

- Engage the rear seats or the rear bench seat on the guide rail within the marked area.

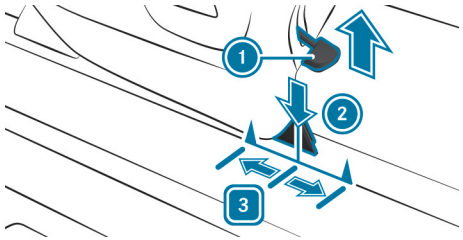

① Release handle
② Fore-and-aft setting marking
[3] Basic setting marking

Starting from the basic setting [3], the rear seats for passengers can be moved forwards or backwards by 5 cm. In doing so, make sure that passengers have sufficient legroom to reduce the risk of injury during braking.

- Pull release handle ① in the direction of the arrow and hold.
- Move the rear seat to the desired position.
- Let go of release handle ①.

► Move the rear seat forwards and backwards until all seat sliders engage correctly.

It should not be possible to move the rear seat.

OPERATING THE LUXURY REAR SEAT

WARNING
Risk of injury or death due to incorrect seat position

The seat belt will not offer the intended level of protection if you have not moved the seat backrest to an almost vertical position.

In particular, you may slip under the seatbelt and injure yourself.

► Adjust the seat properly before beginning your journey.

► Always ensure that the seat backrest is in an almost vertical position and that the shoulder section of your seat belt is routed across the centre of your shoulder.

WARNING
Risk of becoming trapped if the seat is adjusted by children

Children could become trapped if they adjust the seats, particularly if they are unattended.

► When leaving the vehicle, always take the key with you and lock the vehicle.

► Never leave children unattended in the vehicle.

NOTE
Damage to the leg rest due to overload

The leg rest can be damaged if it is loaded with more than 25 kg.

► Do not place more than 25 kg on the leg rest.

NOTE
Damage to the leg rest due to manual adjustment

The leg rest can be damaged if it is adjusted manually.

► Only adjust the leg rest electrically.

NOTE
Damage to the luxury rear seat due to incorrect position of the leg rest

If you turn the luxury rear seat's leg rest or set it in the longitudinal direction, the seat may be damaged.

► Only adjust the leg rest inclination as described in the following.

Requirements:

- The vehicle is switched on.

ADJUSTING THE LUXURY REAR SEAT

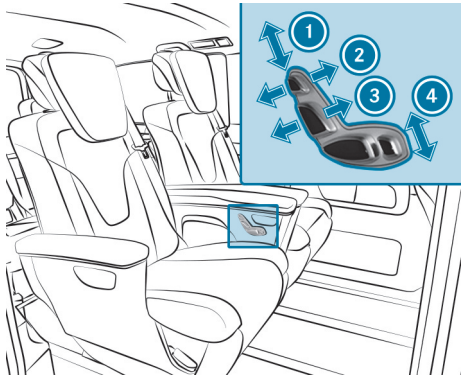

1. Head restraint height adjustment
2. Head restraint fore-and-aft adjustment
3. Seat backrest inclination adjustment
4. Leg rest inclination adjustment

► Adjust the rear seat with buttons 1 to 4.

ADJUSTING THE SIDE BOLSTERS ON THE FRONT SEATS

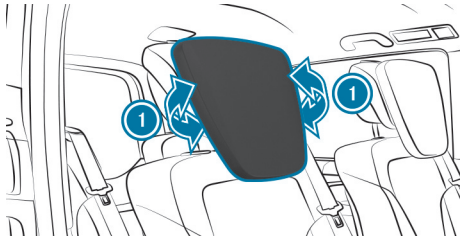

► Push or pull right-hand and left-hand side bolster 1 into the desired position.

ADJUSTING THE UPRIGHT POSITION OF THE LUXURY REAR SEAT

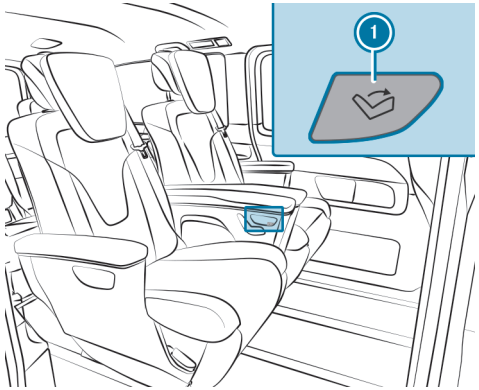

► Press button 1 until the rear seat is in the upright position and the leg rest is fully folded under the seat surface.

MEMORY FUNCTION

WARNING
Risk of entrapment when adjusting the seat with the memory function

When the memory function adjusts the seat, you and other vehicle occupants – particularly children – could become trapped.

► During the adjustment process of the memory function, make sure that no one has any body parts in the sweep of the seat.

► If somebody becomes trapped, immediately release the memory function position button.

The adjustment process is stopped.

WARNING
Danger of entrapment when memory function is activated by children

When children activate the memory function, they can get trapped, especially if they are unsupervised.

- Never leave children unattended in the vehicle.
- When leaving the vehicle, always take the key with you and lock the vehicle.

Seat adjustments for up to two people can be stored and called up using the memory function.

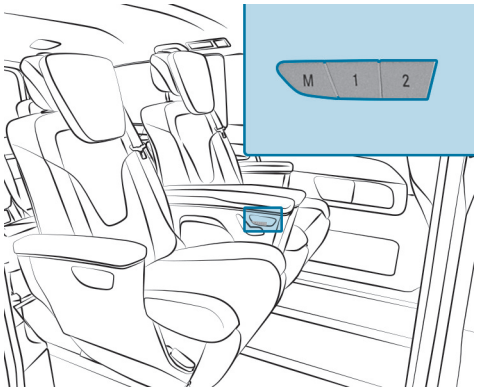

- Adjust the seat as desired.
- **To save:** press the M memory button and then press the 1 or 2 memory position switch within three seconds.
  A tone will sound. The settings are stored.
- **To call up:** press and hold the preset position button 1, or 2 until the rear seat is in the stored position.

SETTING THE RELAXATION FUNCTION

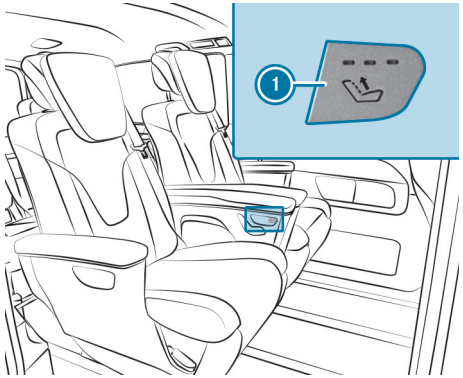

THE FOLLOWING MASSAGE PROGRAMMES ARE AVAILABLE:

- Classic Massage
- Relaxing Massage (lower back)
- Mobilising Massage

- **To switch on:** press button 1 repeatedly until the desired relaxation program has been set.
- **To switch off:** press button 1 until all indicator lamps are off.

MOVING THE LUXURY REAR SEAT

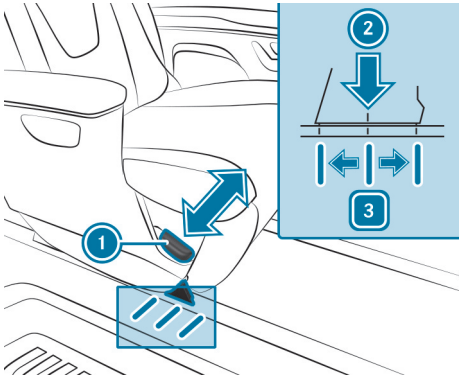

1 Release handle for seat fore-and-aft adjustment
2 Fore-and-aft setting marking
3 Basic setting marking

Starting from basic setting 3, you can move a rear seat for vehicle occupants forwards or backwards by 5 cm. In doing so, make sure that vehicle occupants have sufficient legroom to reduce the risk of injury during braking.

- Pull the release handle 1 in the direction indicated by the arrow.
- With the release handle pulled, slide the rear seat to the desired position.
- Let go of release handle 1.
- Slide the rear seat forwards and backwards until the carriage is correctly engaged on both sides.
  It should not be possible to move the seat.

MOVING THE LUXURY REAR SEAT FROM THE THIRD SEAT ROW

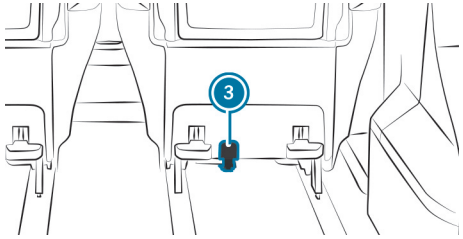

- Push lever 3 down.
- With lever 3 pushed down, move the rear seat to the desired position.
- Release lever 3.
- Slide the rear seat forwards and backwards until the carriage is correctly engaged on both sides.
  It should not be possible to move the seat.

USING USB PORTS IN THE ARMREST

REQUIREMENTS:

- The vehicle is switched on.

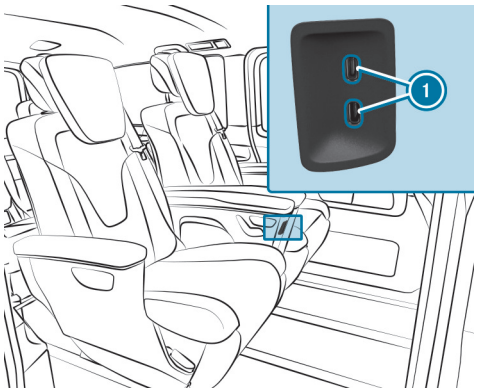

You can use USB ports ① in the front of the armrest to charge a USB device (e.g. mobile phone) using a suitable charging cable.

► Insert a suitable charging cable.

REMOVING AND INSTALLING THE FOOTREST FOR THE LUXURY REAR SEAT

REMOVING

► Pull release lever ③ beneath footrest ① in the direction of the arrow.

► Pull footrest ① upwards and out of the detent of guide rail ②.

INSTALLING

► Press footrest ① from above into the detent of guide rail ②.

► Push release lever ③ forward as far as it will go.

Footrest ① has been secured.

SWITCHING THE REAR SEAT HEATING ON/OFF

> ⚠ **WARNING**
> Risk of burns due to repeatedly switching on the seat heating
>
> Repeatedly switching on the seat heating can cause the seat cushion and seat backrest padding to become very hot.
>
> In particular, the health of persons with limited temperature sensitivity or a limited ability to react to high temperatures may be affected or they may even suffer burn-like injuries.
>
> ► Do not repeatedly switch on the seat heating.

To protect against overheating, the seat heating may be temporarily deactivated after it has been switched on repeatedly.

> ! **NOTE**
> Damage to the seats caused by objects or documents when the seat heater is switched on
>
> When the seat heater is switched on, overheating may occur due to objects or documents placed on the seats e.g. seat cushions or child seats. This could cause damage to the seat surface.
>
> ► Make sure that no objects or documents are on the seats when the seat heater is switched on.

Requirements:

- The vehicle is switched on.

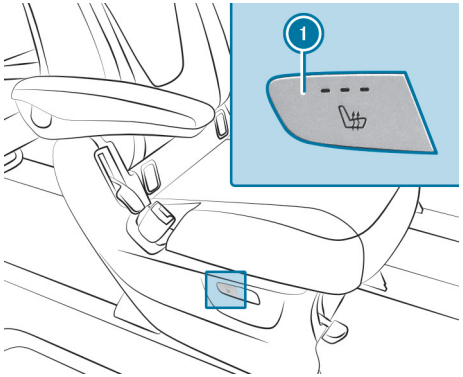

Comfort rear seat

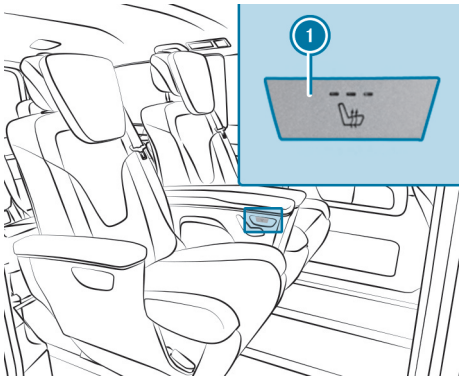

Luxury rear seat

- **To switch on:** press button 1.
  All indicator lamps on the button will light up.
- **To lower the level:** press button 1 until the required heating level is reached.
  Depending on the heating level, one to three indicator lamps will light up.
- **To switch off:** press button 1 until all indicator lamps are off.

> The seat heating will automatically switch down from the three heating levels after 8, 10 and 20 minutes until the seat heating is switched off.

SWITCHING THE REAR SEAT VENTILATION ON AND OFF

Requirements

- The vehicle is switched on.

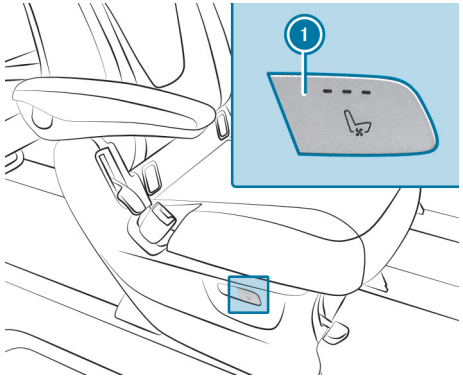

Comfort rear seat

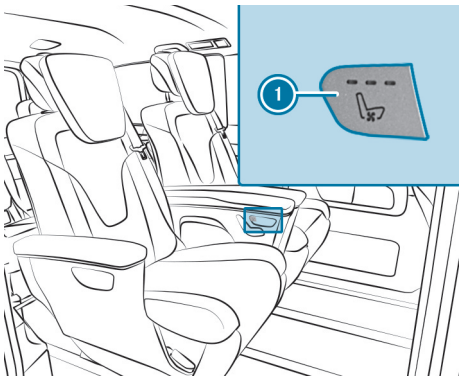

Luxury rear seat

- Make sure that the air inlet grilles on the back of the seat backrest are not covered.
- **To switch on/increase the level:** press button (1) repeatedly until the desired blower setting is set.
  Depending on the blower setting, one to three indicator lamps will light up.
- **To switch off/reduce the level:** press button (1) repeatedly until the desired blower setting is set.
  If all indicator lamps are off, the seat ventilation is switched off.

FITTING AND REMOVING THE REAR SEAT

WARNING
Risk of injury due to malfunction of the rear seat monitoring system

If the restraint system of a rear seat is malfunctioning, the driver will be warned by a corresponding display message.

In the event of a malfunction of the rear seat monitoring system, the restraint system of another rear seat may also be malfunctioning.

- Check the correct installation and the electrical connectors of all rear seats.
- If the malfunction of the restraint system of a seat in the second or third seat row persists, do not use any seat in either seat row.
- Have the restraint system and the rear seat monitoring system checked and repaired immediately at a qualified specialist workshop.

WARNING
Risk of accident- and injury if the seat is not engaged

If a seat is not engaged, it may be thrown about while the vehicle is moving.

- Always make sure that all seats are engaged as described.

To ensure that the rear seats can securely engage, keep the seat guide rails and anchorages in the vehicle floor free of dirt and foreign objects.

If the indicator tab of the seat anchorage is not fully retracted into the seat base, the seat is not correctly engaged. Engage the seat again.

> **WARNING**
> Risk of becoming trapped when adjusting the seats
>
> When you adjust a seat, you may trap yourself or a vehicle occupant.
>
> ▶ When adjusting a seat, make sure that no one has any body parts in the sweep of the seat.

REMOVING

When removing and fitting the rear seats, note the routing of the cables and their original installation positions. Otherwise, you may damage the cables and the rear seat monitoring may be impaired.

Have luxury rear seats removed and installed at a qualified specialist workshop.

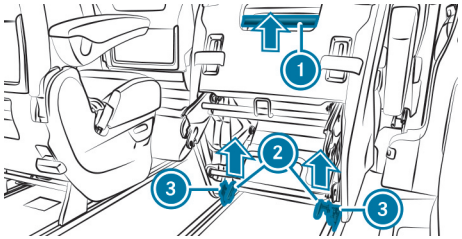

Rear seat folded forwards (example)

- ▶ Make sure that all seat sliders for fore-and-aft adjustment are engaged on both sides.
  It should not be possible to move the rear seat.
- ▶ Fold the seat forwards (→ page 242).
- ▶ Disconnect the electrical connector (→ page 238).
- ▶ Grasp the seat by grab handle ① and fold two release handles ② upwards.
- ▶ Move the folded seat towards the front and lift it out.

FITTING

- ▶ Hold the seat by grab handle ①.
- ▶ From above, guide the seat in a tilted position into front seat anchorages ③ and allow it to engage.
- ▶ Connect the electrical connector (→ page 238).
- ▶ Fold the seat back to the table or seat position and slide into the basic position (→ page 242).

Rear bench seat

USING THE EASY-ENTRY EASY ENTRY AND EXIT FEATURE (REAR BENCH SEAT)

> **WARNING**
> Risk of accident and injury as a result of rear bench seat not being engaged
>
> If the rear bench seat is not engaged, it may be flung around during travel.
>
> ▶ Always make sure that the rear bench seat is engaged as described.

In order to ensure that the seats can securely engage, keep the seat guide rails and anchorages in the vehicle floor free of dirt and foreign objects.

If the indicator tabs on the rear seat anchorages are not fully retracted into the seat base, the seat is not correctly engaged. Engage the seat again.

WARNING
Risk of becoming clamped when adjusting the rear bench seat

When adjusting a rear seat bench, either yourself or one of the occupants could become clamped, e.g. on the guide rail of the rear bench seat.

- Ensure that no body parts are within movement range of the rear bench seat when adjusting a rear bench seat.

WARNING
Risk of becoming trapped due to the rear bench seat not being engaged

The rear bench seat will not engage when folded forward. The rear bench seat may inadvertently fold back while the vehicle is accelerating, braking or changing direction suddenly or in the event of an accident, forexample.

People within the sweep of the rear bench seat may become trapped.

- Always fold back a rear bench seat that has been folded forward before you start driving.
- Ensure that the rear bench seat is engaged.

If you fold the EASY-ENTRY section of the rear bench seat forwards, it will be easier for you to get in and out of the vehicle.

To ensure that the rear bench seat can securely engage, keep the seat guide rails and anchorages in the vehicle floor free of dirt and foreign objects.

FOLDING THE EASY-ENTRY SECTION FORWARDS

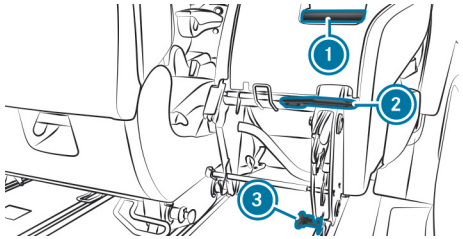

Comfort rear bench seat (example)

1. Grab handle
2. EASY-ENTRY release handle
3. Release handle for front seat legs

- Pull EASY-ENTRY release handle 2 upward and fold the EASY-ENTRY section forwards.
- **To fold back the EASY-ENTRY section:** fold the EASY-ENTRY section backwards.

REMOVING THE EASY-ENTRY SECTION

WARNING
Risk of injury due to malfunction of the rear seat monitoring system

If the restraint system of a rear seat is malfunctioning, the driver will be warned by a corresponding display message.

In the event of a malfunction of the rear seat monitoring system, the restraint system of another rear seat may also be malfunctioning.

- Check the correct installation and the electrical connectors of all rear seats.
- If the malfunction of the restraint system of a seat in the second or third seat row persists, do not use any seat in either seat row.
- Have the restraint system and the rear seat monitoring system checked and repaired immediately at a qualified specialist workshop.

Observe the routing of the cables when removing and installing the EASY-ENTRY part. Otherwise you may damage the cable and the rear seat monitoring may be impaired.

- Fold the seat backrest forward (comfort rear bench seat).
- Pull EASY-ENTRY release handle (2) upwards.
- Fold the EASY-ENTRY section forwards.
- Disconnect the electrical connector (→ page 238).
- Pull release handle (3) for the front seat legs upwards.
- Fold the EASY-ENTRY section further forwards and lift it up and out of the anchorage.

INSTALLING THE EASY-ENTRY SECTION

- Place the front seat leg of the EASY-ENTRY section on the seat anchorages and engage it.
- Connect the electrical connector (→ page 238).
- Fold the EASY-ENTRY section back.
- Fold the seat backrest back to the seat position (comfort rear bench seat).

OPERATING THE REAR BENCH SEAT

ADJUSTING THE SEAT BACKREST (COMFORT REAR BENCH SEAT)

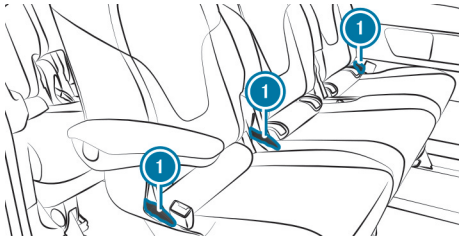

Only the seat backrests of a comfort rear bench seat can be adjusted.

- Pull release handle (1) upwards and hold it in place.
- Move the seat backrest to the desired position.
- Let go of release handle (1) and move the seat backrest slightly.
  The seat backrest will engage in position.

FOLDING THE REAR BENCH SEAT FORWARDS

WARNING
Risk of accident and injury as a result of rear bench seat not being engaged

If the rear bench seat is not engaged, it may be flung around during travel.

- Always make sure that the rear bench seat is engaged as described.

In order to ensure that the seats can securely engage, keep the seat guide rails and anchorages in the vehicle floor free of dirt and foreign objects.

If the indicator tabs on the rear seat anchorages are not fully retracted into the seat base, the seat is not correctly engaged. Engage the seat again.

WARNING
Risk of becoming trapped due to the rear bench seat not being engaged

The rear bench seat will not engage when folded forward. The rear bench seat may inadvertently fold back while the vehicle is accelerating, braking or changing direction suddenly or in the event of an accident, forexample.

People within the sweep of the rear bench seat may become trapped.

- Always fold back a rear bench seat that has been folded forward before you start driving.
- Ensure that the rear bench seat is engaged.

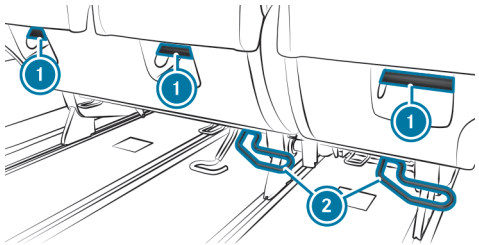

- Remove the head restraints (→ page 221).
- Comfort rear bench seat: fold the seat backrest forward.
- Pull release handles ② up.
- Grasp the rear bench seat by grab handles ① and fold the seat forwards.

FOLDING BACK THE REAR BENCH SEAT

- Hold the rear bench seat by grab handle ① and pull it backwards.
- Comfort rear bench seat: fold the seat backrest back.
- Install the head restraints and adjust them (→ page 221).

MOVING THE REAR BENCH SEAT

WARNING
Risk of becoming clamped when adjusting the rear bench seat

When adjusting a rear seat bench, either yourself or one of the occupants could become clamped, e.g. on the guide rail of the rear bench seat.

- Ensure that no body parts are within movement range of the rear bench seat when adjusting a rear bench seat.

WARNING
Risk of injury due to moving the rear bench seat while the vehicle is in motion

If you move the rear bench seat while driving, the seat may move in an unexpected or jerking manner, forinstance when braking.

You could become trapped as well as thrown against parts of the vehicle or other vehicle occupants.

- ► Only move the rear bench seat when the vehicle is stationary.
- ► Make sure that the rear bench seat is engaged after it is moved.

WARNING
Risk of injury due to no protective effect from the window airbag

If you move the seat position outside the marked area, the window airbag can no longer provide optimum protection.

The protective effect of the window airbag is gradually reduced and may in some positions no longer be provided at all.

- ► Engage the rear seats or the rear bench seat on the guide rail within the marked area.

WARNING
Risk of injury from the front seat being positioned too close to vehicle occupants

If you move the rear seats or the rear bench seat outside the markings on the guide rail, this could result in the passenger striking their head on the front seat.

- ► Maintain a minimum clearance of 5 cm between the knees of the respective vehicle occupants and the seat in front of them.

Requirements:

- The vehicle is equipped with a seat rail system in the vehicle floor.

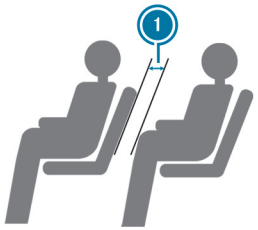

Maintain a minimum clearance of 5 cm (1) between the knees of the vehicle occupants and the seat in front of them.

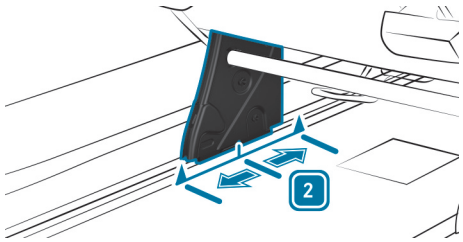

Starting from the basic setting 2, the rear bench seat for passengers can be moved forwards or backwards by 5 cm. In doing so, make sure that passengers have sufficient legroom to reduce the risk of injury during braking.

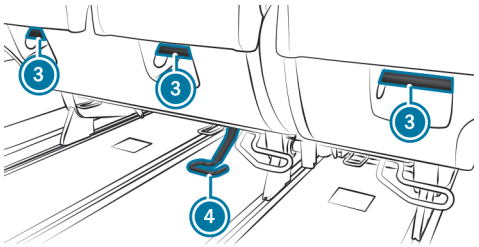

You can slide the rear bench seat only when it is unoccupied. If possible, slide the rear bench seat with the assistance of another person.

- Pull release handle 4 upwards.
- Move the rear bench seat to the desired position by grab handles 3.
- Let go of the release handle 4.
- Move the rear bench seat forwards and backwards until all seat sliders audibly engage.
  It should not be possible to move the rear bench seat.

INSTALLING AND REMOVING THE COMFORT REAR BENCH SEAT

WARNING
Risk of injury due to malfunction of the rear seat monitoring system

If the restraint system of a rear seat is malfunctioning, the driver will be warned by a corresponding display message.

In the event of a malfunction of the rear seat monitoring system, the restraint system of another rear seat may also be malfunctioning.

- Check the correct installation and the electrical connectors of all rear seats.
- If the malfunction of the restraint system of a seat in the second or third seat row persists, do not use any seat in either seat row.
- Have the restraint system and the rear seat monitoring system checked and repaired immediately at a qualified specialist workshop.

WARNING
Risk of accident and injury as a result of rear bench seat not being engaged

If the rear bench seat is not engaged, it may be flung around during travel.

- Always make sure that the rear bench seat is engaged as described.

In order to ensure that the seats can securely engage, keep the seat guide rails and anchorages in the vehicle floor free of dirt and foreign objects.

If the indicator tabs on the rear seat anchorages are not fully retracted into the seat base, the seat is not correctly engaged. Engage the seat again.

REMOVING THE REAR BENCH SEAT

When removing and installing the rear bench seat, observe the routing of cables and their original installation positions. Otherwise, you may damage the cables and the rear seat monitoring may be impaired.

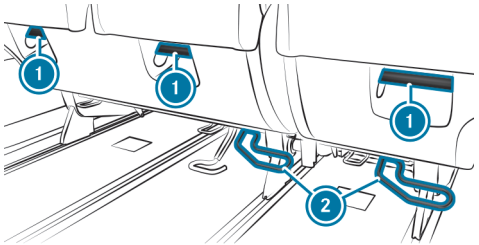

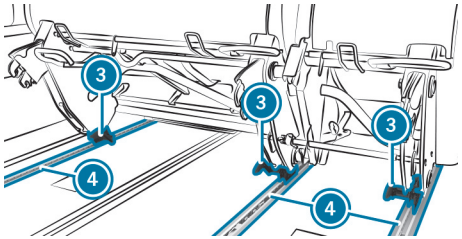

ⓘ In vehicles with a seat rail system, carry out the release, removal and installation of the rear bench seats at the marked basic position only (⟶ page 254).

- Ensure that all seat sliders for fore-and-aft adjustment are engaged.
  It should not be possible to move the rear bench seat.
- Pull release handles ② up.
- Grasp the rear bench seat by grab handles ① and fold the seat forwards.
- Disconnect the electrical connectors (⟶ page 238).
- Pull release handles ③ up.
- Hold the rear bench seat by grab handles ① and lift it out of seat anchorages ④.

ⓘ If the third seat row is to be removed or tilted, the seat or bench seat on the second seat row must first be tilted forwards to avoid damage to the seats.

INSTALLING THE REAR BENCH SEAT

- Grasp the rear bench seat by grab handles ①.
- Insert the rear bench seat at an angle into front seat anchorages ④ from above at the front and allow it to engage.
- Connect the electrical connectors (⟶ page 238).
- Pull the rear bench seat backwards by grab handles ①.

Seat/bunk combination

OPERATING THE SEAT/BUNK COMBINATION

WARNING
Risk of becoming clamped when adjusting the rear bench seat

When adjusting a rear seat bench, either yourself or one of the occupants could become clamped, e.g. on the guide rail of the rear bench seat.

- Ensure that no body parts are within movement range of the rear bench seat when adjusting a rear bench seat.

WARNING
Risk of injury due to moving the rear bench seat while the vehicle is in motion

If you move the rear bench seat while driving, the seat may move in an unexpected or jerking manner, forinstance when braking.

You could become trapped as well as thrown against parts of the vehicle or other vehicle occupants.

- Only move the rear bench seat when the vehicle is stationary.
- Make sure that the rear bench seat is engaged after it is moved.

WARNING
Risk of injury due to no protective effect from the window airbag

If you move the seat position outside the marked area, the window airbag can no longer provide optimum protection.

The protective effect of the window airbag is gradually reduced and may in some positions no longer be provided at all.

- Engage the seat-/-bunk combination on the guide rail within the marked area.

WARNING
Risk of injury due to positioning the seat-/-bunk combination outside the markings

If you move the seat-/-bunk combination outside the markings on the guide rail, this could result in the passenger striking their head on the seat.

- Maintain a minimum clearance of 5 cm between the knees of the respective vehicle occupants and the seats in front of them.

NOTE
Damage to the seat belt retractor due to pulling on the seat belts

The function of the seat belt retractor can be impaired by pulling on the seat belts to adjust the seat backrest.

- Always use the grab strap on the seat backrest of the middle seat to align the seat backrest.

NOTE
Damage to the seat/bunk combination when moving

If you grasp and push the seat/bunk combination by the stowage compartment plastic cover only, the cover may break off.

If the space in front of or behind the seat/bunk combination is not clear, objects may become trapped when displaced.

The seat/bunk combination, trim or the objects may become damaged.

- To move, use the loop between the seat backrest and sitting surface.
- When moving, make sure that the space in front of or behind the seat/bunk combination is clear.

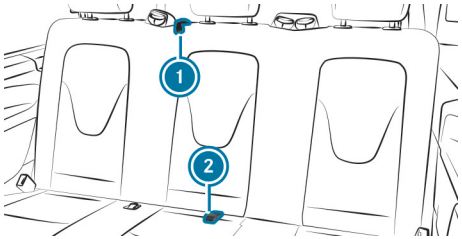

If you set the seat backrest of the seat/bunk combination to the horizontal position, this – together with the bed extension – will give you a full-length berth for two people.

Passengers may use the seats of the seat/bunk combination only when the seat backrest is upright. Only then will the seat belts provide the intended degree of protection.

- To adjust the seat/bunk combination, use only the retainer loop on seat backrest (1) or on seat surface (2).

MOVING THE SEAT/BUNK COMBINATION

You can move the seat/bunk combination only when it is unoccupied. Pull the seat/bunk combination forwards only by the retainer loop on the seat surface.

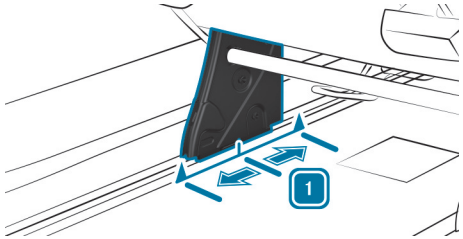

1 Basic setting

Starting from the basic setting 1, the seat/bunk combination for passengers can be moved forwards or backwards by 5 cm. In doing so, make sure that passengers have sufficient legroom to reduce the risk of injury during braking.

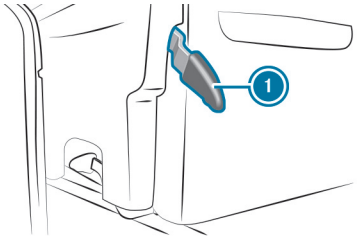

If the seat sliders on the front rear seat row are too far back in the guide rails, it will not be possible to move the seat/bunk combination forwards. In this case, use the handle for the seat sliders to move the seat sliders.

- Pull the release handle (1) upwards.

- Take hold of the retainer loop on the seat surface and move the seat/bunk combination.
- Let go of the release handle (1).
- Move the seat/bunk combination forwards and backwards until all seat sliders audibly engage.

  It should no longer be possible to move the seat/bunk combination.

USING THE BED EXTENSION

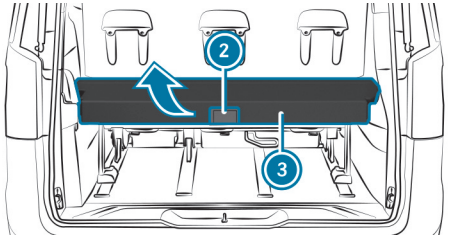

- **To fold up:** pull the release handle (2) back and move the bed extension (3) into an upright position.

  The bed extension will engage in an upright position.

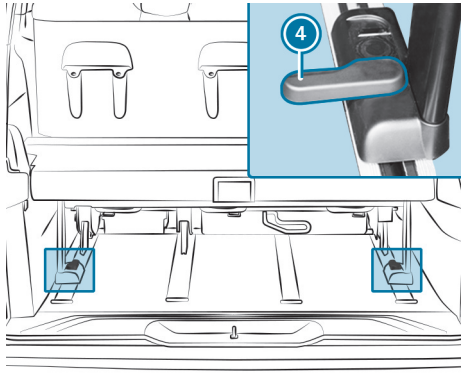

- **To remove:** fold up the bed extension (3) and swing the levers (4) inwards.

  The bed extension will now be loose and capable of being removed from the guide rails.
- **To install:** guide the bed extension (3) into the guide rails and the swing levers (4) forwards.

SETTING UP THE BERTH

> ⚠ **WARNING**
> Risk of injury or death if the berth is used while the vehicle is in motion
>
> Any vehicle occupant using a bed while the vehicle is in motion cannot be restrained properly.
>
> - Use the bed only when the vehicle is parked.

> ⚠ **WARNING**
> Risk of becoming trapped when the seat backrest is folded up and down
>
> When folding the seat backrest up or down, you could cause yourself or other vehicle occupants to become trapped.
>
> - Make sure that the range of movement of the seat backrest is clear and that no one is trapped.

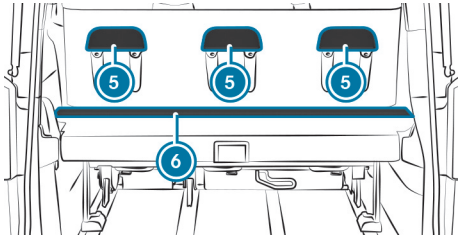

- Fold up the short section of the bed extension 6.

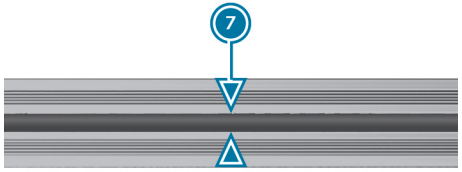

- Move the seat/bunk combination forwards to mark 7 on the guide rail.
- Remove the head restraints of the seat/bunk combination.
- Rotate the head restraints by 180° and insert them into brackets 5 on the rear side of the seat backrest.

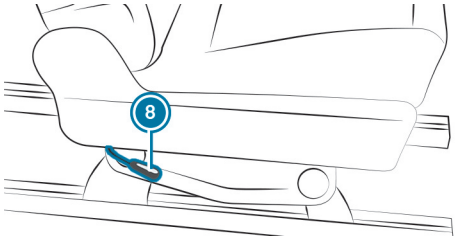

- Pull backrest release handle 8 up and adjust the seat backrest to a horizontal position.
- Fold down the short section of the bed extension 6.

FOLDING AWAY THE BERTH

- Perform the steps to set up the berth in reverse order.

After use, finish by moving the seat/bunk combination back to the basic setting and ensure that the seat backrest is in an upright position.

MOVING THE SEAT SLIDERS

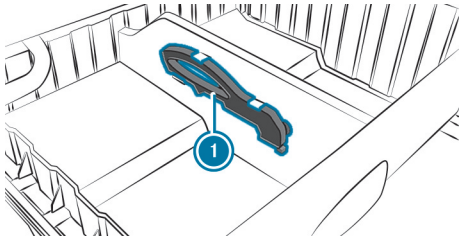

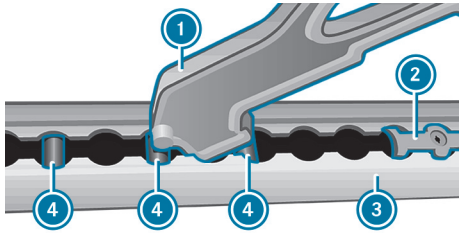

When you remove the seat/bunk combination, a rear bench seat or a seat, the seat slider may shift in a guide rail. The seat sliders will then no longer be parallel in the guide rails. In this case, you will no longer be able to fit the respective seating. The seat sliders must be moved using only the handle 1 for seat sliders or at a qualified specialist workshop in order to prevent the risk of damage.

In addition, you can use the end of the handle to open and close the locks on the sliders.

ⓘ The handle ① is in the stowage compartment of the seat/bunk combination (⟶ page 270).

- Place the tip of handle ① onto the middle bolt of the three bolts ④.
- Swing the handle ① downwards onto the seat slider ②.
- Press the seat slider ② into the guide rail ③ with the handle ①.
  The seat slider ② will be unlocked.
- Move the seat slider ② into the correct position and engage it.

INSTALLING AND REMOVING THE SEAT/BUNK COMBINATION

⚠ **WARNING**
Risk of injury due to malfunction of the rear seat monitoring system

If the restraint system of a rear seat is malfunctioning, the driver will be warned by a corresponding display message.

In the event of a malfunction of the rear seat monitoring system, the restraint system of another rear seat may also be malfunctioning.

- Check the correct installation and the electrical connectors of all rear seats.
- If the malfunction of the restraint system of a seat in the second or third seat row persists, do not use any seat in either seat row.
- Have the restraint system and the rear seat monitoring system checked and repaired immediately at a qualified specialist workshop.

⚠ **WARNING**
Risk of accident and injury as a result of rear bench seat not being engaged

If the rear bench seat is not engaged, it may be flung around during travel.

- Always make sure that the rear bench seat is engaged as described.

Keep the seat anchorages in the vehicle floor free of dirt and objects at all times to ensure that the rear bench seat engages securely.

If the indicator tabs on the seat anchorages are not fully retracted into the seat base, the seat is not correctly engaged. Engage the seat again.

REMOVING THE SEAT/BUNK COMBINATION

When removing and installing the rear bench seat, observe the routing of cables and their original installation positions. Otherwise, you may damage the cables and the rear seat monitoring may be impaired.

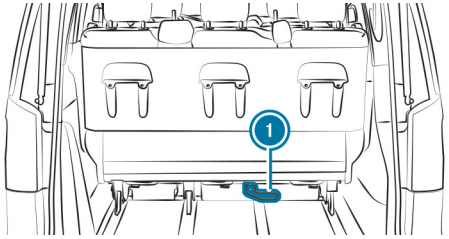

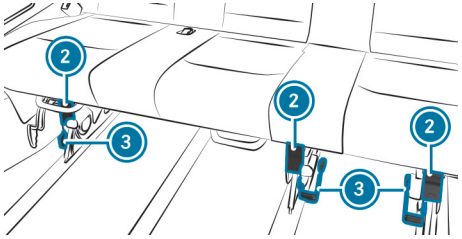

ⓘ In vehicles with a seat rail system, carry out the release, removal and installation of the rear bench seats at the marked basic position only (⟶ page 259).

- Fold release handle ① for rear seat anchorage up.
- Tilt the seat/bunk combination forwards using the upper edge of the seat backrest.
- Disconnect the electrical connectors (⟶ page 238).
- Pull release handle ③ for front seat legs up.
- Hold the seat/bunk combination by the lower edge of the seat cushion.
- Fold the seat/bunk combination forwards and lift it out of seat anchorages ②.

INSTALLING THE SEAT/BUNK COMBINATION

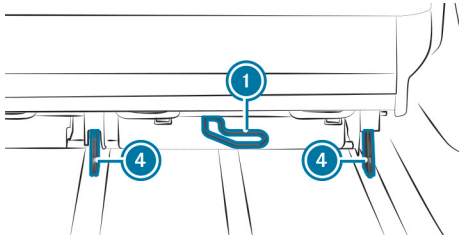

- Hold the seat/bunk combination by the lower edge of the seat cushion.
- Place the seat/bunk combination into front seat anchorages ② from above at the front and engage it.
- Connect the electrical connectors (⟶ page 238).
- Make sure that release handles ③ for the front seat legs are folded down in the direction of the floor of the vehicle.
- Fold the seat/bunk combination back into the seat position.
- Press release handle ① for rear seat anchorage downwards until indicator tabs ④ have fully retracted into the rear seat anchorages.

The rear seat legs of the rear bench seat are correctly engaged when the seat legs engage audibly and indicator tabs ④ on the seat legs are no longer visible and have fully retracted into the seat legs.

Steering wheel

Adjusting the steering wheel

WARNING
Risk of accident due to adjusting the vehicle settings while the vehicle is in motion

YOU COULD LOSE CONTROL OF THE VEHICLE IN THE FOLLOWING SITUATIONS IN PARTICULAR:

- if you adjust the driver's seat, the head restraint, the steering wheel or the mirror while the vehicle is in motion
- if you fasten your seat belt while the vehicle is in motion

▶ Before starting the vehicle: in particular, adjust the driver's seat, head restraint, steering wheel and mirror, and fasten your seat belt.

WARNING
Risk of accident due to unlocked steering wheel

The steering wheel may move unexpectedly if it is unlocked while the vehicle is in motion.

▶ Make sure that the steering wheel is locked before driving off.

▶ Never unlock the steering wheel when the vehicle is in motion.

WARNING
Risk of entrapment for children when adjusting the steering wheel

Children could injure themselves if they adjust the steering wheel.

▶ Never leave children unattended in the vehicle.

▶ When leaving the vehicle, always take the key with you and lock the vehicle.

TO UNLOCK

▶ Fold down the release lever ③ fully.
The steering column is unlocked.

▶ Adjust height ① and distance ② to the steering wheel.

TO LOCK

▶ Fold up the release lever ③ fully.

- Check and ensure that the steering column is locked by moving the steering wheel.

Switching the steering wheel heater on/off

Requirements

- The vehicle is switched on.

Depending on the vehicle version, the steering wheel heater can be switched on/off via a switch on the steering wheel.

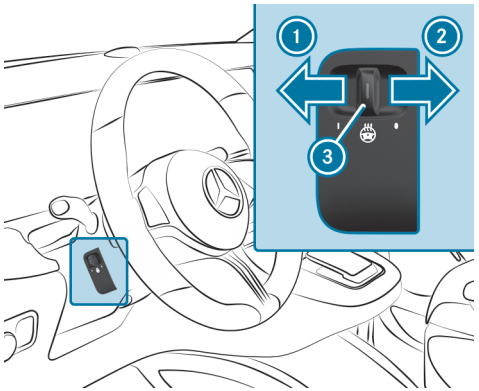

- **To switch on:** push the switch into position 1.
  The indicator lamp 3 will light up.
- **To switch off:** push the switch into position 2.
  The indicator lamp 3 will go out.

When you switch the vehicle off, the steering wheel heater is also switched off.

Stowage areas

Notes on stowage areas

WARNING
Risk of injury due to objects being stowed incorrectly

If objects in the vehicle interior are stowed incorrectly, they can slide or be thrown around and hit vehicle occupants. In addition, cup holders, open stowage spaces and mobile phone brackets cannot always retain all objects they contain.

There is a risk of injury, particularly in the event of sudden braking or a sudden change in direction.

- ► Always stow objects in such a way that they cannot be thrown around in such situations.
- ► Always make sure that objects do not protrude from stowage spaces, luggage nets or stowage nets.
- ► Close the lockable stowage spaces before starting a journey.
- ► Always stow and secure heavy, hard, pointed, sharp-edged, fragile or bulky objects in the boot.

Also observe the notes on loading guidelines (⟶ page 619).

Stowage spaces and stowage compartments

OPENING AND CLOSING THE STOWAGE COMPARTMENT IN THE CENTRE CONSOLE

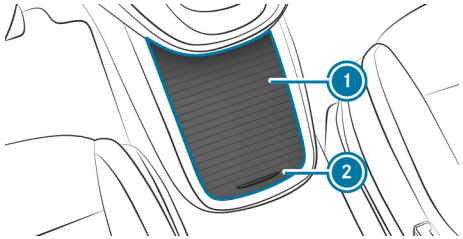

► Slide cover (1) of the centre console up or down using handle (2).

THE FOLLOWING CAN BE FOUND IN THE STOWAGE COMPARTMENT OF THE CENTRE CONSOLE DEPENDING ON THE VEHICLE'S EQUIPMENT:

- A 12 V socket (⟶ page 283) or the cigarette lighter (⟶ page 281)
- The Media Interface with two USB ports or with two USB ports and one SD card slot
- The mat for wireless charging of a mobile phone (⟶ page 284)
- The ashtray (⟶ page 280)
- A stowage compartment or a device installation frame for auxiliary equipment, e.g. a tachograph

OPENING AND CLOSING THE STOWAGE COMPARTMENT UNDER THE ARM-REST

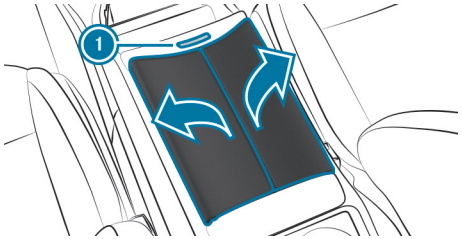

- **To open:** press button 1.
  The stowage compartment will open.
- **To close:** press to close the flaps of the stowage compartment in any order.

THE FOLLOWING CAN BE FOUND IN THE STOWAGE COMPARTMENT UNDER THE ARMREST DEPENDING ON THE VEHICLE'S EQUIPMENT:

- The Media Interface with two USB ports or with two USB ports and one SD card slot

OPENING AND CLOSING THE GLOVE COMPARTMENT

WARNING
Risk of injury due to objects being stowed incorrectly

If objects in the vehicle interior are stowed incorrectly, they can slide or be thrown around and hit vehicle occupants. In addition, cup holders, open stowage spaces and mobile phone brackets cannot always retain all objects they contain.

There is a risk of injury, particularly in the event of sudden braking or a sudden change in direction.

- Always stow objects in such a way that they cannot be thrown around in such situations.
- Always make sure that objects do not protrude from stowage spaces, luggage nets or stowage nets.
- Close the lockable stowage spaces before starting a journey.
- Always stow and secure heavy, hard, pointed, sharp-edged, fragile or bulky objects in the boot.

Observe the notes on loading the vehicle (→ page 619).

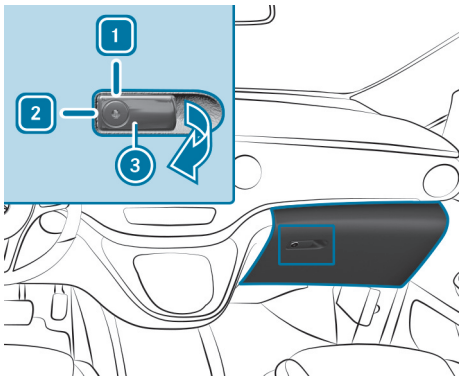

1 Unlocked
2 Locked
3 Glove compartment handle

- **To lock/unlock:** turn the emergency key a quarter turn anti-clockwise 2 (to lock) or clockwise 1 (to unlock).
- **To open:** pull glove compartment handle 3 in the direction of the arrow.
- **To close:** fold the glove compartment handle up and press on it until it engages.

OPENING THE GLASSES COMPARTMENT

WARNING
Risk of injury due to objects being stowed incorrectly

If objects in the vehicle interior are stowed incorrectly, they can slide or be thrown around and hit vehicle occupants. In addition, cup holders, open stowage spaces and mobile phone brackets cannot always retain all objects they contain.

There is a risk of injury, particularly in the event of sudden braking or a sudden change in direction.

- Always stow objects in such a way that they cannot be thrown around in such situations.
- Always make sure that objects do not protrude from stowage spaces, luggage nets or stowage nets.
- Close the lockable stowage spaces before starting a journey.
- Always stow and secure heavy, hard, pointed, sharp-edged, fragile or bulky objects in the boot.

Observe the notes on loading the vehicle (→ page 619).

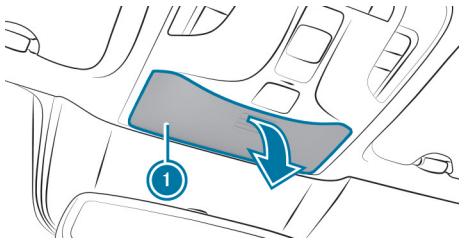

- Press on glasses compartment 1.

INSTALLING AND REMOVING STOWAGE COMPARTMENTS UNDERNEATH THE SEAT/BUNK COMBINATION

REMOVING

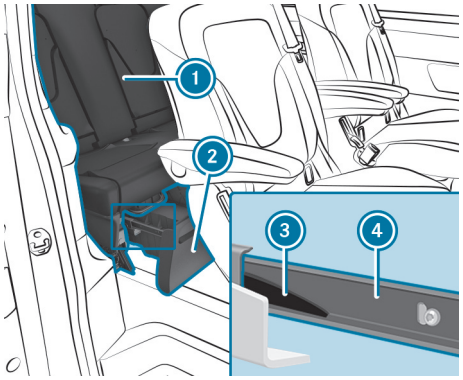

ⓘ The maximum load that can be placed in each stowage compartment is 13 kg.

- Slide seat/bunk combination ① as far back as possible (⟶ page 259).
- Pull stowage compartment ② out as far as it will go.
- Pull left-hand (when viewed in the direction of travel) plastic tongue ③ down and right-hand plastic tongue ③ up/ Pull out stowage compartment ② a little each time.

  The corresponding stop will be released.
- Pull out stowage compartment ②.

INSTALLING

- Slide seat/bunk combination ① as far back as possible (⟶ page 259).
- Slide stowage compartment ② into guide rails ④ underneath the seat/bunk combination.

  Plastic tongues ③ will engage automatically.

Folding table

Installing and removing the folding table

WARNING
Risk of injury from unsecured items in the vehicle

If objects, luggage or loads are not secured or not secured sufficiently, they could slip, tip over or be thrown around and thereby hit vehicle occupants.

There is a risk of injury, particularly in the event of sudden braking or a sudden change in direction.

- Always stow objects in such a way that they cannot be thrown around.
- Before the journey, secure objects, luggage or loads against slipping or tipping over.

WARNING
Risk of accident- and injury due to the folding table not being engaged

The folding table can come loose and be flung around while the vehicle is in motion.

- Install the folding table as described.
- Only move the folding table when the vehicle is stationary.
- Ensure that the folding table is correctly engaged.

NOTE
Damage to the folding table or the armrest when the rear seats are folded forwards or backwards

If the folding table is not positioned all the way back when the rear seats are folded forwards or backwards, the folding table and/or the armrest of the rear seat may be damaged.

- Slide the folding table all the way back before folding the rear seats forwards or backwards.

INSTALLING THE FOLDING TABLE

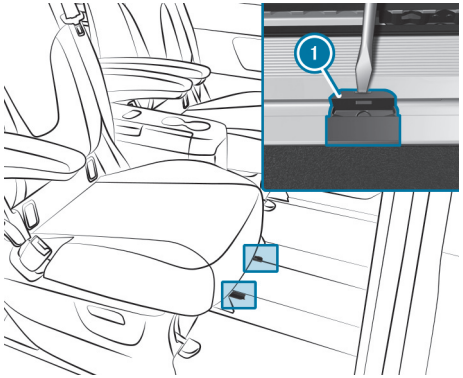

- Observe the notes on loading (⟶ page 619).
- Push the anterior rear seats back fully or, if necessary, remove them.
- Lift both covers ① out of the guide rails slightly using a suitable tool, e.g. a screwdriver.

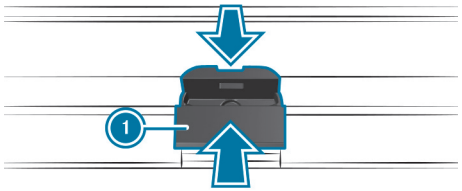

- Press both covers ① together slightly and remove them from guide rails .

  The openings in the rail for the middle slides on the underside of the folding table will be open.

- Rotate the folding table until the arrow on the underside of the folding table is pointing in the direction of travel.

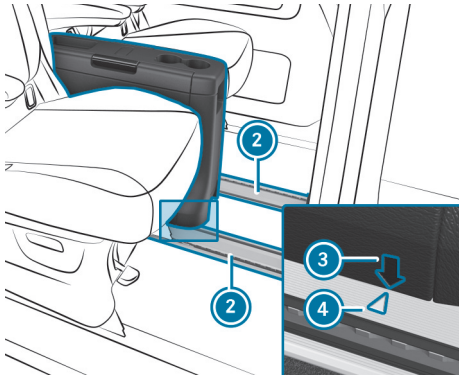

Installation position

- Insert the folding table into guide rails ② such that arrows ③ on the folding table point to both markings ④ on guide rails ②.

  The guides and slides on the underside of the folding table will fit into the guide rails.

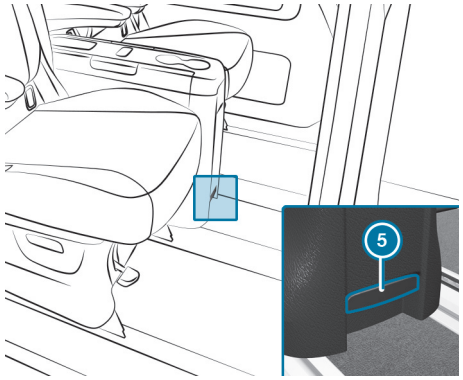

- Pull lever ⑤ on the front or rear side of the folding table upwards and push the folding table backwards.

Press both covers ① together slightly and engage them in the openings of the guide rails.

MOVING THE FOLDING TABLE

- Pull and hold lever ⑤ and move the folding table into the desired position.
- Release lever ⑤.
- Move the folding table until it automatically engages in the next possible position.
- After repositioning the table, ensure that the folding table is properly secured again.

REMOVING THE FOLDING TABLE

- Fold in the table panels and retract the table.
- Push the anterior rear seats back fully or, if necessary, remove them.
- Push the folding table back so that covers ① of the openings in the rail can be removed.
- Lift both covers ① out of the guide rails slightly using a suitable tool, e.g. a screwdriver.
- Press both covers ① together slightly and remove them from guide rails ②.

  The openings in the rail for the middle slides on the underside of the folding table will be open.
- Push the folding table forwards into the installation position.

  Arrows ③ on the folding table will point to both markings ④ on guide rails ②.
- Lift the folding table out of guide rails ②.
- Press both covers ① together slightly and engage them in the openings of guide rails ②.

Using the folding table

EXTENDING THE FOLDING TABLE

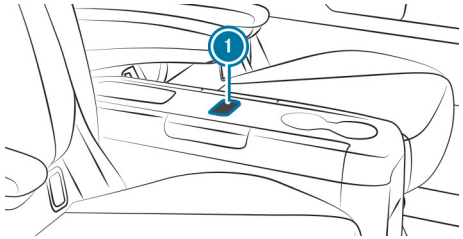

- Press button ① all the way down and release it.

  The folding table will move upwards and engage automatically.

RETRACTING THE FOLDING TABLE

- Press button ① all the way down and simultaneously press the centre section of the folding table downwards.
- Release button ① when the folding table is in its retracted position.

  The centre section of the folding table will engage automatically.

FOLDING THE TABLE PANEL IN AND OUT

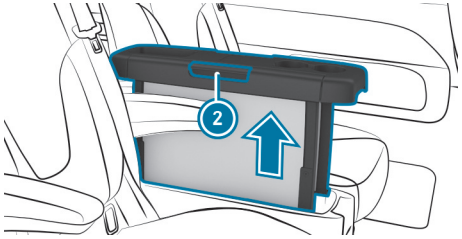

- **To fold out the table panel:** pull out the table panels upwards as far as they will go using handles (2) and swing them to the side until they engage.

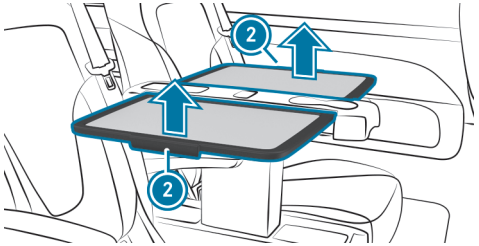

- **To fold in the table panel:** swing the table panels upwards using handles (2) and slide them vertically downwards into the table.

INSTALLING AND REMOVING THE INSERT

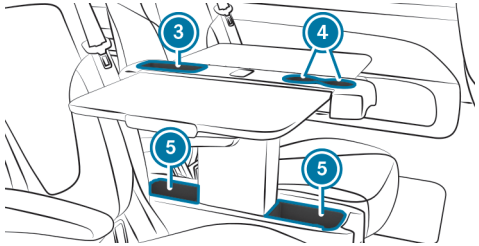

(3) Recess on the folding table
(4) Cup holder
(5) Inserts

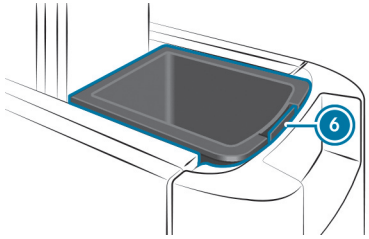

- **To remove:** press lug (6) and remove the insert.
- **To install:** put in the insert and press it down until it engages.

Folding the folding table in and out on the seat backrest

WARNING
Risk of injury when the folding table is folded out

Vehicle occupants may bump into the folding table and injure themselves.

- Use the folding table only when the vehicle is stationary.
- Stow the folding table before each journey.

FOLDING THE FOLDING TABLE OUT

Do not subject the folding table to a load greater than 2 kg.

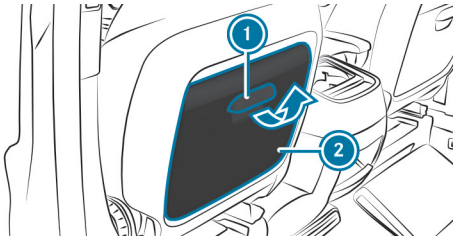

- Pull handle 1 on folding table 2 upwards.
  Folding table 2 has been unlocked.

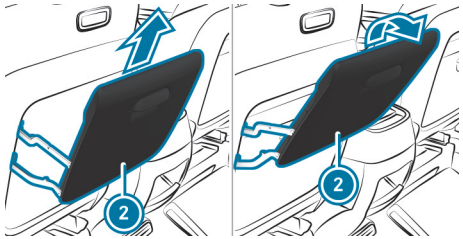

- Pull folding table 2 up with handle 1 and fold it out.

FOLDING THE FOLDING TABLE IN

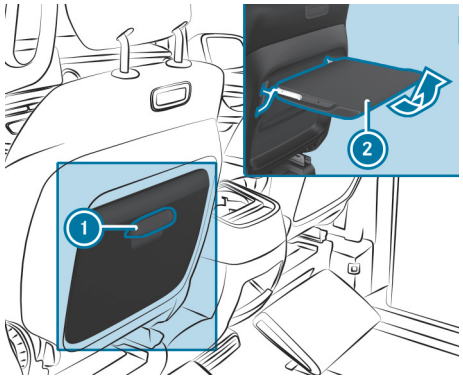

- Pull folding table 2 upwards by handle 1 and fold it in.
  Folding table 2 will lock into place.

Information about the bottle holder

The bottle holders are in front of the stowage compartments in the front doors.

There are additional bottle holders on the left and right in the rear compartment side trim.

Cup holder

Opening the cup holder on the luxury seat

WARNING
Risk of accident or injury if the cup holder is used while the vehicle is in motion

Cup and bottle holders cannot keep containers secure while the vehicle is in motion.

If you use a cup or bottle holder while the vehicle is in motion, the container may be flung around and liquids could be spilled. Vehicle occupants may come into contact with the liquid and if it is hot, they could be scalded. You could be distracted from traffic conditions and you may lose control of the vehicle.

- Use the cup and bottle holders only when the vehicle is stationary.
- Place only suitable containers in the cup and bottle holders.
- Close the containers, particularly if the liquid is hot.

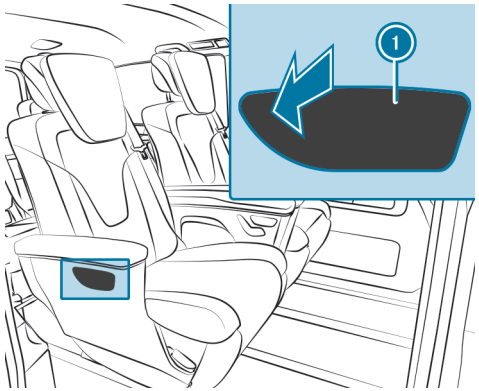

- **To open:** press cup holder 1.
  Cup holder 1 will fold out forwards.
- **To close:** fold cup holder 1 back in until it engages.

Inserting the cup holder in the rear passenger compartment

WARNING
Risk of accident or injury if the cup holder is used while the vehicle is in motion

Cup and bottle holders cannot keep containers secure while the vehicle is in motion.

If you use a cup or bottle holder while the vehicle is in motion, the container may be flung around and liquids could be spilled. Vehicle occupants may come into contact with the liquid and if it is hot, they could be scalded. You could be distracted from traffic conditions and you may lose control of the vehicle.

- Use the cup and bottle holders only when the vehicle is stationary.
- Place only suitable containers in the cup and bottle holders.
- Close the containers, particularly if the liquid is hot.

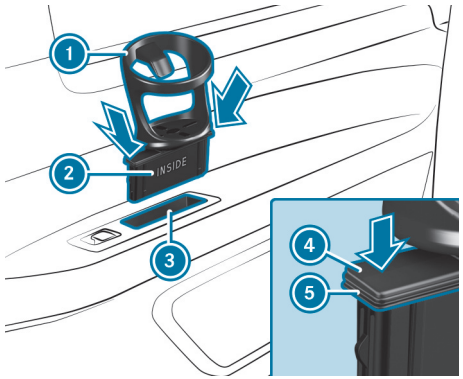

- Position cup holder 1 above stowage compartment 3 so that the lettering "INSIDE" on its base 2 faces towards the vehicle interior.
- Insert base 2 into stowage compartment 3 and press down on both sides.

The cup holder is correctly inserted when both sealing rings 5 are inserted in stowage compartment 3 and upper edge 4 of the base locks positively with stowage compartment 3.

- **To remove:** grasp the bottom of cup holder 1 from below and remove it by lifting its base 2 out vertically.

Switching the temperature-controlled cup holder on and off

WARNING
Risk of accident or injury if the cup holder is used while the vehicle is in motion

Cup and bottle holders cannot keep containers secure while the vehicle is in motion.

If you use a cup or bottle holder while the vehicle is in motion, the container may be flung around and liquids could be spilled. Vehicle occupants may come into contact with the liquid and if it is hot, they could be scalded. You could be distracted from traffic conditions and you may lose control of the vehicle.

- Use the cup and bottle holders only when the vehicle is stationary.
- Place only suitable containers in the cup and bottle holders.
- Close the containers, particularly if the liquid is hot.

Requirements

- The vehicle is switched on.

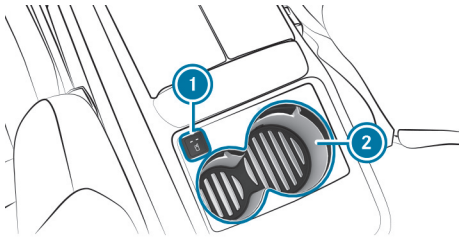

- **To switch on:** press the button 1 repeatedly until the blue (keep cool) or red (keep warm) indicator lamp on the button lights up.
- **To switch off:** press the button 1 repeatedly until the indicator lamp on the button goes out.

Clean the removable rubber mat only with clean, lukewarm water and the cup holder 2 only with a damp cloth.

Ashtray and cigarette lighter

Using ashtrays

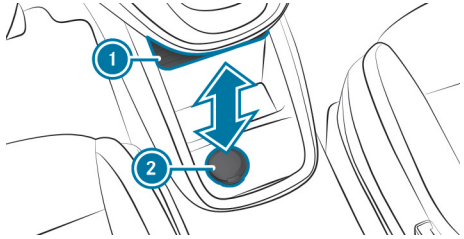

- Slide cover (1) of the centre console upwards (→ page 267).
- Insert the ashtray with cap (2) into a cup holder in the centre console with cover or into a cup holder in the rear passenger compartment.

Using the ashtray and cigarette lighter in the rear passenger compartment

WARNING
Risk of fire and injury from hot cigarette lighter

You can suffer burns if you touch the hot heating element or the hot socket of the cigarette lighter.

IN ADDITION, FLAMMABLE MATERIALS CAN CATCH FIRE IF:

- you drop the hot cigarette lighter.
- children e.g. hold the hot cigarette lighter to objects.

- Always hold the cigarette lighter by the knob.
- Always make sure that the cigarette lighter is out of the reach of children.
- Never leave children unattended in the vehicle.

Requirements:

- The vehicle is switched on.

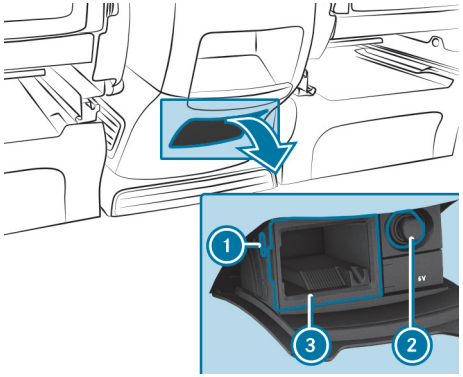

- Pull down the cover.
- **To use the cigarette lighter:** press cigarette lighter 2.
  The cigarette lighter will pop out when the heating element is red-hot.
- **To remove the ashtray:** press ribbing 1 and remove insert 3.
- **To insert the ashtray:** push in insert 3 from above and press it into the holder until it engages.

Using the cigarette lighter

WARNING
Risk of fire and injury from hot cigarette lighter

You can suffer burns if you touch the hot heating element or the hot socket of the cigarette lighter.

IN ADDITION, FLAMMABLE MATERIALS CAN CATCH FIRE IF:

- you drop the hot cigarette lighter.
- children e.g. hold the hot cigarette lighter to objects.

- Always hold the cigarette lighter by the knob.
- Always make sure that the cigarette lighter is out of the reach of children.
- Never leave children unattended in the vehicle.

Requirements

- The power supply is switched on.

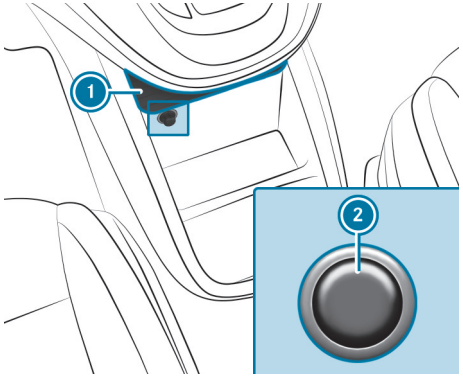

Cigarette lighter in the centre console (example: centre console with cover)

- Slide up cover 1 of the centre console (→ page 267).
- Push on the cigarette lighter 2.
  The cigarette lighter will pop out when the heating element is red-hot.

ⓘ You can use the cigarette lighter as a socket for accessories with a maximum current draw of 180 W (15 A) (→ page 283).

Sockets

Using the 12 V socket

Requirements:

- The power supply is switched on.
- Only devices with up to a maximum of 180 watts (15 A) are permissible.

YOUR VEHICLE MAY BE EQUIPPED WITH THE FOLLOWING 12 V SOCKETS:

- In the front centre console
- In the side trim in the rear passenger compartment
- In the side trim in the load compartment

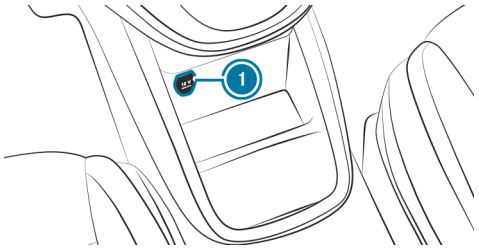

Example: 12 V socket

▶ Fold up cover (1) of the socket.

▶ Insert the plug of the device.

Overview of the USB ports

When the vehicle is switched on, you can charge a USB device, such as a mobile phone, at the USB ports using a suitable charging cable.

ⓘ Smartphone Integration: you can connect your phone to the multimedia system via a USB port marked with the symbol (⟶ page 610).

DEPENDING ON ITS EQUIPMENT, THE VEHICLE HAS THE FOLLOWING USB PORTS:

- in the stowage compartment in the centre console (⟶ page 267)
- in the stowage compartment under the armrest (⟶ page 268)
- in the front of the armrest on a luxury rear seat (⟶ page 245)
- at the front on the rear seats

Wirelessly charging the mobile phone and coupling with the exterior aerial

Notes on wirelessly charging the mobile phone

WARNING
Risk of injury due to objects being stowed incorrectly

If objects in the vehicle interior are stowed incorrectly, they may slide or be thrown around and hit vehicle occupants. In addition, cup holders, open stowage spaces and mobile phone receptacles will not always be able to retain all objects that they contain in the event of an accident.

There is a risk of injury, particularly in the event of sudden braking or a sudden change in direction.

- Always stow objects such that they cannot be thrown around in such situations.
- Always make sure that objects do not protrude from stowage spaces, luggage nets or stowage nets.
- Close the lockable stowage spaces before starting a journey.
- Always stow and secure heavy, hard, pointed, sharp-edged, fragile or bulky objects in the boot/load compartment.

Observe the notes on loading the vehicle (→ page 619).

WARNING
Risk of fire if objects are placed in the mobile phone tray while charging

There is a risk of fire if you place additional objects in the mobile phone tray while charging. This is particularly the case when metallic objects are involved.

- Do not place any objects, especially metal objects such as coins, in the mobile phone tray while charging.

NOTE
Damage to objects caused by placing them in the mobile phone stowage compartment

If objects are placed in the mobile phone stowage compartment, these may be damaged by electromagnetic fields.

- Do not place credit cards, storage media, ski passes or other objects sensitive to electromagnetic fields in the mobile phone stowage compartment.

NOTE
Damage to the mobile phone stowage compartment caused by liquids

If liquids enter the mobile phone stowage compartment, the compartment may be damaged.

► Ensure that no liquids enter the mobile phone stowage compartment.

Always observe the notes for persons with electronic medical aids (→ page 121).

- Depending on the vehicle equipment, the mobile phone is connected to the vehicle's exterior aerial via the charging module.
- The charging function and wireless coupling of the mobile phone with the vehicle's external aerial are only available when the vehicle is switched on.
- In some cases, it may not be possible to charge small mobile phones at every position of the mobile phone compartment.
- Large mobile phones that are not placed in the mobile phone compartment may not be able to be charged or paired with the vehicle's external aerial.
- The mobile phone can warm up during the charging process. This may also depend on the applications (apps) currently open in the background.
- To ensure more efficient charging and connection with the vehicle's exterior aerial, remove the protective cover from the mobile phone. Protective covers which are necessary for wireless charging are an exception.

Charging your mobile phone wirelessly in the cockpit

WARNING
Risk of injury due to objects being stowed incorrectly

If objects in the vehicle interior are stowed incorrectly, they can slide or be thrown around and hit vehicle occupants. In addition, cup holders, open stowage spaces and mobile phone brackets cannot always retain all objects they contain.

There is a risk of injury, particularly in the event of sudden braking or a sudden change in direction.

► Always stow objects so that they cannot be thrown around in such situations.

► Always make sure that objects do not protrude from stowage spaces, stowage nets or ruffled pockets.

► Close the lockable stowage spaces before starting a journey.

► Stow and secure objects that are heavy, hard, pointed, sharp-edged, fragile or too large in the load areas.

► Use suitable accessories and lashing material for securing loads.

Requirements:

- The mobile phone must be suitable for wireless charging.

ⓘ A list of compatible mobile phones can be found at: https://www.mercedes-benz-mobile.com/

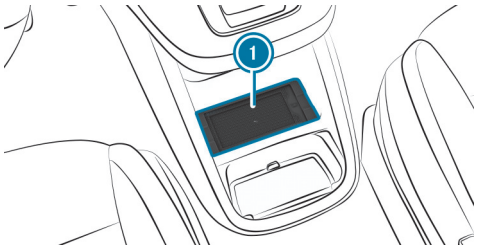

- Comply with the notes on loading the vehicle (⟶ page 619).
- Place the mobile phone on the mat ① as centrally as possible with the display facing upwards.

  When a message is shown in the multimedia system, the mobile phone is being charged.

  Any malfunctions detected when charging are shown in the media display.

ⓘ The mat can be removed for cleaning, e. g. using clean, lukewarm water.

RADIO EQUIPMENT APPROVAL NUMBERS FOR BRAZIL
This device works in secondary mode, which means that it has no protection against harmful interference, not even from stations of the same type, and must not cause any interference with systems which work in primary mode.

This product is approved in accordance with the procedures specified in directive 242/2000 by the Brazilian telecommunications agency ANATEL and corresponds to the valid technical requirements.

Further information is available on the ANATEL website. www.anatel.gov.br

- Further information on the declaration of conformity of radio-based vehicle components (⟶ page 111).

Wireless charging of a mobile phone on the luxury rear seat

⚠ **WARNING**
Risk of injury due to objects being stowed incorrectly

If objects in the vehicle interior are stowed incorrectly, they can slide or be thrown around and hit vehicle occupants. In addition, cup holders, open stowage spaces and mobile phone brackets cannot always retain all objects they contain.

There is a risk of injury, particularly in the event of sudden braking or a sudden change in direction.

- Always stow objects so that they cannot be thrown around in such situations.
- Always make sure that objects do not protrude from stowage spaces, stowage nets or ruffled pockets.
- Close the lockable stowage spaces before starting a journey.
- Stow and secure objects that are heavy, hard, pointed, sharp-edged, fragile or too large in the load areas.
- Use suitable accessories and lashing material for securing loads.

Requirements:

- The mobile phone is suitable for wireless charging.

- Comply with the notes on loading the vehicle (⟶ page 619).
- Place the mobile phone on mat 1 as centrally as possible with the display facing upwards.

ⓘ The mat can be removed for cleaning, e.g. using clean, lukewarm water.

Notes on attaching the iPad®

WARNING
Risk of injury from unsecured items in the vehicle

If objects, luggage or loads are not secured or not secured sufficiently, they could slip, tip over or be thrown around and thereby hit vehicle occupants.

There is a risk of injury, particularly in the event of sudden braking or a sudden change in direction.

- Always stow objects in such a way that they cannot be thrown around.
- Before the journey, secure objects, luggage or loads against slipping or tipping over.

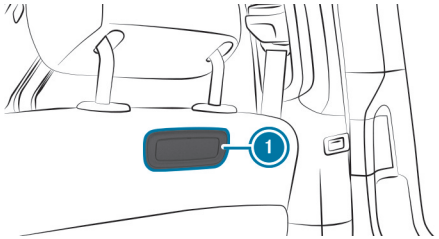

Your vehicle is equipped with iPad® attachment (1) on the driver's and front passenger seat backrests.

A mount, which has been tested and approved especially for Mercedes-Benz vehicles, is available as an accessory. Only this mount can unlock the attachment opening and allow the iPad® to be charged whilst it is installed.

iPad® attachment (1) may only be used for accessories up to 42 W (3.5 A).

Contact a Mercedes-Benz Service Centre for information and availability. Before using the mount, please read the Owner's Manual for the mount.

Also observe the notes on loading guidelines (→ page 619).

Only use accessories which have been tested and recommended by Mercedes-Benz.

Light and vision

This interactive PDF works like a website – tap or click a button to jump straight to where you want to go.
You can return here at any time via the navigation bar at the top left.

Exterior lighting
Interior lighting
Changing bulbs
Windscreen wipers
Mirrors
Operating sun visors

Exterior lighting

Notes on adjusting the lights when driving abroad

VEHICLES WITH HALOGEN HEADLAMPS:
It is not necessary to convert the headlamps. The statutory requirements of the countries in which traffic drives on the opposite side of the road to the country in which the vehicle is registered are also met without changing over.

VEHICLES WITH MULTIBEAM LED:
The headlights will automatically be adjusted when you cross the border into countries in which traffic does not drive on the same side of the road.

IN THE FOLLOWING CASES, CHECK THE HEADLAMP SETTING AND CHANGE IT MANUALLY IF NECESSARY:

- If the Low beam setting (left/right-side traffic) Manual adjustment only display message is displayed.
- If the Check low beam setting (left/right-side traffic) display message is displayed.

ⓘ Only if the headlamps are properly adjusted will oncoming traffic not be dazzled.

Information about lighting systems and your responsibility

The vehicle's various lighting systems are only aids. The vehicle driver is responsible for adjusting the vehicle's lighting to the prevailing light, visibility, statutory conditions and traffic conditions.

Light switch

OPERATING THE LIGHT SWITCH

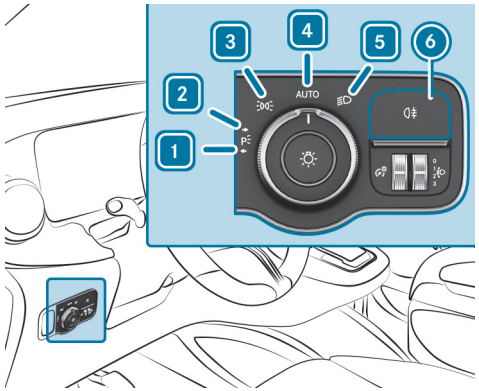

1 ←P≡ Left parking lights
2 P≡→ Right parking lights
3 ≡DOC Side lights and licence plate and instrument lighting
4 AUTO Automatic driving lights, controlled by the light sensor

5 Low beam or high beam
6 Rear fog light

If you hear a warning tone when exiting the vehicle, the lights may still be on.

► To switch off, turn the light switch to AUTO.

The exterior lighting (except side or parking lights) will switch off automatically if you open the driver's door while the vehicle is switched off.

SWITCHING ON THE DAYTIME RUNNING LIGHTS

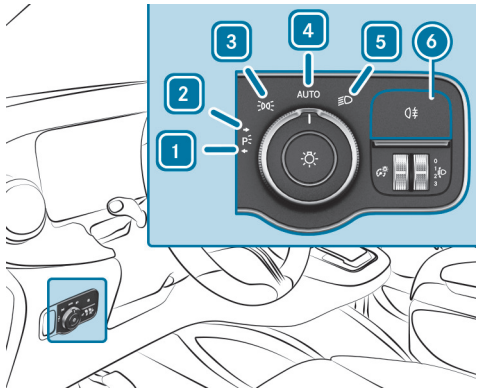

1 Left parking lights
2 Right parking lights
3 Side lights and licence plate and instrument lighting
4 AUTO Automatic driving lights, controlled by the light sensor
5 Low beam or high beam
6 Rear fog light

► Turn the light switch to AUTO.

AUTOMATIC DRIVING LIGHTS FUNCTION

When the vehicle is switched on, the standing lights, low beam and daytime running lights will be switched on automatically depending on the light conditions.

> ⚠ **WARNING**
> Risk of accident when the dipped beam is switched off in poor visibility
>
> When the light switch is set to AUTO, the dipped beam may not be switched on automatically if there is fog, snow or other causes of poor visibility such as spray.
>
> ► In such cases, turn the light switch to .

The automatic driving lights are only an aid. Responsibility for vehicle lighting rests with you.

SWITCHING THE REAR FOG LIGHT ON/OFF

Requirements:

- The light switch is in the or AUTO position.

► Press the button.

Comply with the country-specific regulations for using the rear fog light.

ADJUSTING THE HEADLAMP RANGE (HALOGEN HEADLAMPS)

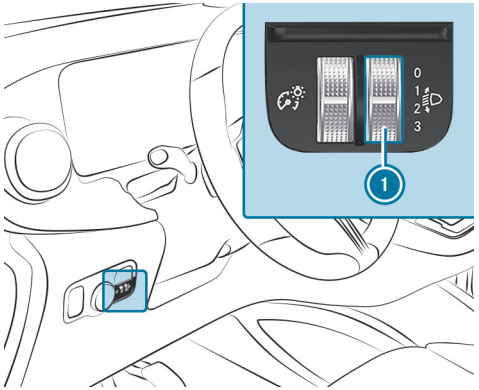

- Turn headlamp range adjuster (1) to the required position.
- If the vehicle is unladen, select position [0].

The illumination of the road should be 40 m to 100 m and the low beam must not dazzle oncoming traffic.

You can use the headlamp range adjuster to adjust the light cone of the headlamps to your vehicle's load condition. When the seats are occupied or the load compartment is loaded or unloaded, the light cone will change. This may cause visibility conditions to deteriorate and you could dazzle oncoming traffic.

Operating the combination light switch

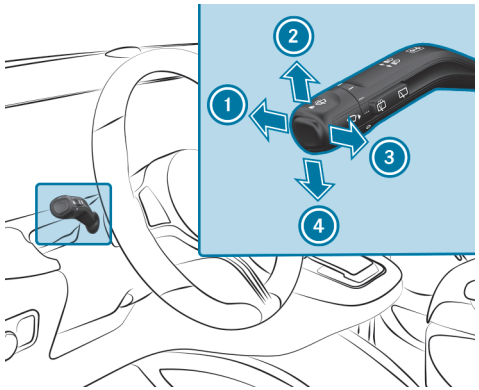

(1) High beam
(2) Right turn signal light
(3) Headlamp flashing
(4) Left turn signal light

- Use the combination switch to select the desired function.

SWITCHES ON HIGH BEAM

- Turn the light switch to the [≡D] or [AUTO] position.
- Push the combination switch in the direction indicated by the arrow (1).
  When high beam is activated, the indicator lamp for low beam [≡D] will be deactivated and replaced by the indicator lamp for high beam [≡D].

SWITCHING OFF HIGH BEAM

- Push the combination switch in the direction indicated by the arrow (1) or pull it in the direction indicated by the arrow (3).

HEADLAMP FLASHING

- Pull the combination switch in the direction indicated by the arrow (3).

TURN SIGNAL LIGHTS

- **To indicate briefly:** push the combination switch briefly to the point of resistance in the direction indicated by the arrow ② or ④.

  The corresponding turn signal light will flash three times.

- **To indicate permanently:** push the combination switch beyond the point of resistance in the direction indicated by the arrow ② or ④.

  When significant steering movements are made, the combination switch will automatically reset itself.

Switching the hazard warning light system on/off

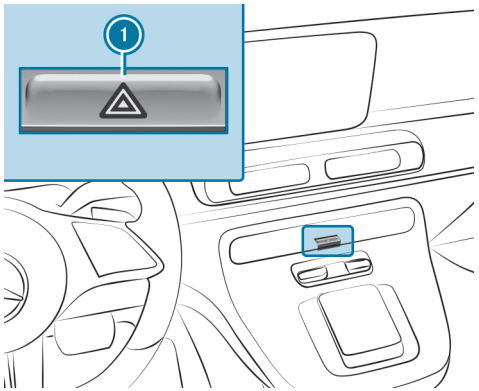

- Press button ①.

THE HAZARD WARNING LIGHT SYSTEM WILL SWITCH ON AUTOMATICALLY IN THE FOLLOWING SITUATIONS:

- The airbag is deployed
- The vehicle is braked heavily from a speed of more than 70 km/h to a standstill.

When pulling away again, the hazard warning lights switch off automatically at approx. 10 km/h. You can also switch off the hazard warning light system using button ①.

When the turn signal indicator is activated, the hazard warning lights will be interrupted.

Adaptive functions, MULTIBEAM LED

FUNCTION OF DYNAMIC LOW BEAM

The MULTIBEAM LED headlamps adapt to the weather and the situation on the road and provide advanced functions for improved illumination of the roadway.

THE SYSTEM COMPRISES THE FOLLOWING FUNCTIONS:

- Active light function (→ page 294)
- Cornering light (→ page 294)
- Motorway mode (→ page 294)
- Enhanced fog light function (→ page 295)
- Bad weather light (→ page 295)
- City lighting (→ page 295)

The system will be active only when it is dark.

ACTIVE LIGHT FUNCTION

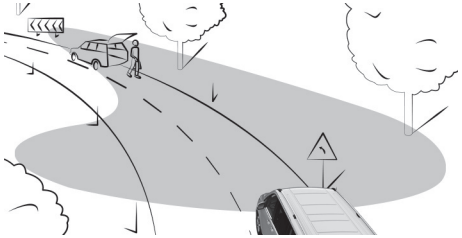

- The headlamps follow the steering movements.
- Relevant areas are better illuminated during a journey.

The functions will be active when low beam is switched on.

Depending on the vehicle's equipment, the course of the lane in which you are driving will also be evaluated and the active headlamps function will adjust the light in advance.

CORNERING LIGHT FUNCTION

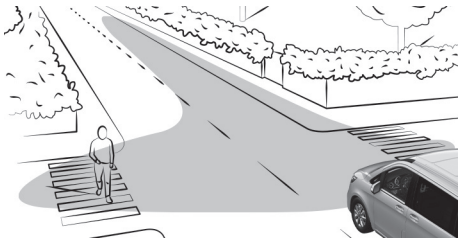

The cornering light improves the illumination of the carriageway over a wide angle in the turning direction, enabling better visibility on tight bends, for example. The cornering light will be activated only when low beam is switched on.

THE FUNCTION WILL BE ACTIVE IN THE FOLLOWING CASES:

- At speeds below 40 km/h when the turn signal light is switched on or the steering wheel is turned
- At speeds between 40 km/h and 70 km/h and when the steering wheel is turned

Roundabout and junction function: the cornering light will be activated on both sides based on an evaluation of the vehicle's current navigation position. It will remain active until after the vehicle has left the roundabout or junction.

MOTORWAY MODE FUNCTION

Motorway mode increases the range and brightness of the cone of light, enabling better visibility.

THE FUNCTION WILL BE ACTIVE IF A MOTORWAY JOURNEY IS DETECTED BY MEANS OF:

- the vehicle's speed
- the multifunction camera
- the navigation system

THE FUNCTION WILL NOT BE ACTIVE IN THE FOLLOWING CASES:

- At speeds below 80 km/h

ENHANCED FOG LIGHT FUNCTION
The enhanced fog light function reduces self-dazzling and improves the illumination of the edge of the carriageway.

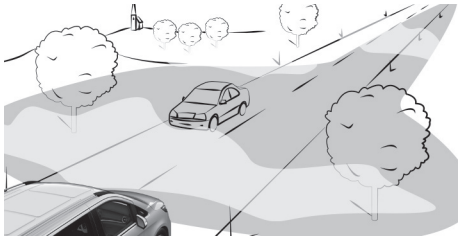

THE FUNCTION IS AUTOMATICALLY ACTIVATED UNDER THE FOLLOWING CONDITIONS:

- At speeds below 70 km/h and when the rear fog light is switched on.

THE FUNCTION IS AUTOMATICALLY DEACTIVATED UNDER THE FOLLOWING CONDITIONS:

- When speeds greater than 100 km/h are reached.
- When the rear fog light is switched off.

FUNCTION OF THE BAD WEATHER LIGHT
The bad weather light reduces reflections in rainy conditions by dimming individual LEDs in the headlamps. There will be less glare for the driver and other road users as a result.

CITY LIGHTING FUNCTION
City lighting improves the illumination of roadsides in urban areas using a broad distribution of light.

THE FUNCTION WILL BE ACTIVE IN THE FOLLOWING CASES:

- At low speeds
- In illuminated parts of urban areas

FUNCTION OF TOPOGRAPHICAL COMPENSATION
Based on available map data, the lighting system will respond pre-emptively to different road heights. This means that the headlamp range will remain virtually constant when you are driving uphill or downhill.

ⓘ Only vehicles with a multimedia system with navigation have this function.

ACTIVATING/DEACTIVATING DYNAMIC LOW BEAM

Requirements:

- The vehicle is switched on.

Multimedia system:
⟶ ⌂ ▸▸ Settings ▸▸ Lights ▸▸ MULTIBEAM LED
▸ Activate or deactivate Dynamic low beam.

Adaptive Highbeam Assist Plus

ADAPTIVE HIGHBEAM ASSIST PLUS FUNCTION

WARNING
Risk of accident despite Adaptive Highbeam Assist Plus

ADAPTIVE HIGHBEAM ASSIST PLUS DOES NOT REACT TO:

- road users without lights, e.g. pedestrians
- road users with poor lighting, e.g. cyclists
- road users whose lighting is obstructed, e.g. by a barrier

On very rare occasions, Adaptive Highbeam Assist Plus may fail to recognise other road users with their own lighting, or may recognise them too late.

In these, or in similar situations, the automatic high beam will not be deactivated or will be activated despite the presence of other road users.

► Always observe the road and traffic conditions carefully and switch off the high beam in good time.

Adaptive Highbeam Assist Plus cannot take into account road, weather or traffic conditions.

DETECTION MAY BE RESTRICTED IN THE FOLLOWING CASES:

- In poor visibility, e.g. fog, heavy rain or snow
- If there is dirt on the sensors or the sensors are obscured

Adaptive Highbeam Assist Plus is only an aid. You are responsible for ensuring correct vehicle lighting in accordance with the prevailing light, visibility and traffic conditions.

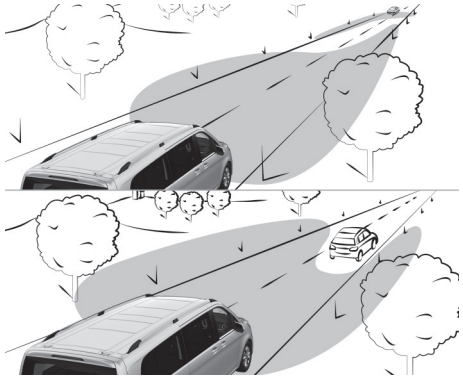

ADAPTIVE HIGHBEAM ASSIST PLUS SWITCHES AUTOMATICALLY BETWEEN THE FOLLOWING LIGHT TYPES:

- Low beam
- Partial high beam
- High beam
- ULTRA RANGE Highbeam

ULTRA RANGE Highbeam increases the brightness of the cone of light close to the legally permitted maximum.

Partial high beam does not include other road users in the high beam area. It does not dazzle them but enables full high-beam illumination for the driver apart from the excluded vehicles. Highly reflective signs are also illuminated with reduced brightness.

AT SPEEDS BELOW 25 KM/H OR WHEN THERE IS SUFFICIENT STREET LIGHTING:

- Partial high beam and high beam will be switched off automatically.

AT SPEEDS ABOVE 30 KM/H:

- If no other road users are detected, high beam will switch on automatically.
- If other road users are detected, partial high beam will be switched on automatically.

AT SPEEDS BELOW 40 KM/H:

- ULTRA RANGE Highbeam will switch off automatically.

AT SPEEDS ABOVE 50 KM/H:

- If no other road users are detected, the road is straight and it is not raining heavily, ULTRA RANGE Highbeam will be switched on automatically.
- If other road users are detected, ULTRA RANGE Highbeam will automatically switch off and partial high beam will switch on.
- If highly reflective signs are detected, ULTRA RANGE Highbeam will be switched off automatically.

ⓘ The system's optical sensor is located behind the windscreen near the overhead control panel.

SWITCHING ADAPTIVE HIGHBEAM ASSIST PLUS ON/OFF

⚠ **WARNING**
Risk of accident despite Adaptive Highbeam Assist Plus

ADAPTIVE HIGHBEAM ASSIST PLUS DOES NOT REACT TO:

- road users without lights, e.g. pedestrians
- road users with poor lighting, e.g. cyclists
- road users whose lighting is obstructed, e.g. by a barrier

On very rare occasions, Adaptive Highbeam Assist Plus may fail to recognise other road users with their own lighting, or may recognise them too late.

In these, or in similar situations, the automatic high beam will not be deactivated or will be activated despite the presence of other road users.

▶ Always observe the road and traffic conditions carefully and switch off the high beam in good time.

PRIMING

▶ Turn the light switch to the AUTO position.

▶ Switch on high beam using the combination switch.
When high beam is switched on automatically in the dark, the indicator lamp will light up on the driver display.

DEACTIVATING

▶ Switch off high beam using the combination switch.

Setting low beam

Multimedia system:

Settings ▶▶ Lights ▶▶ Low beam

▶ Select Right-side traffic, Left-side traffic or Automatic.

Setting the exterior lighting switch-off delay time

Multimedia system:

Settings ▶▶ Lights ▶▶ Exterior lighting switch-off delay

▶ Set a switch-off delay time.

When the vehicle is switched off, the exterior lighting will be activated for the set time.

Activating and deactivating the surround lighting

Multimedia system:

Settings ▶▶ Lights ▶▶ Interior/exterior lighting

▶ Activate or deactivate the function.

The surround lighting will remain on for 40 seconds after the vehicle is unlocked. When you start the vehicle, the surround lighting will be deactivated and the automatic driving lights activated.

Interior lighting

Adjusting the interior lighting

FRONT OVERHEAD CONTROL PANEL

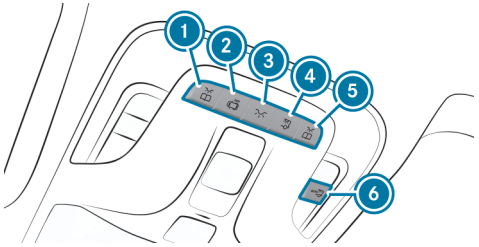

Interior lighting buttons (example)

1. Front left reading lamp
2. Automatic interior lighting control
3. Front interior lighting
4. Rear or load compartment lighting
5. Front right reading lamp
6. Rear night lighting

► **To switch on/off:** press corresponding button 1 – 6.

The layout and number of buttons depend on the equipment.

NIGHT LIGHTING IN THE REAR

► **To switch on/off:** press button 6.

When the function is switched on, the rear lighting will be permanently dimmed during travel.

If a door or the tailgate is opened when the vehicle is parked, the rear compartment will be illuminated without being dimmed.

OPERATING UNIT IN THE GRAB HANDLE

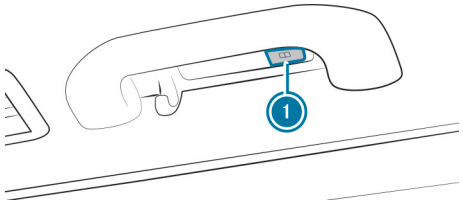

1. Rear reading lamp

► **To switch on/off:** press button 1.

Adjusting ambient lighting

Multimedia system:

Comfort ▶▶ Ambient light

SETTING THE COLOUR

- Select Colour.
- Select Monochrome or Multi-colour.
- Set the desired colour or colour scheme.

ADJUSTING THE BRIGHTNESS

- Select Brightness.
- Adjust the brightness.

ACTIVATING BRIGHTNESS FOR ZONES

- Select Brightness.
- Deactivate Link zones.

  The Front, Rear and Accents zones can be set separately.

ACTIVATING EFFECTS

- Select Effects.
- Activate the desired effect.

ⓘ Different effects will be available depending on the vehicle equipment.

MULTI-COLOUR ANIMATION

- The chosen colour combination will change at predefined intervals.

CLIMATE

- If changes are made to the temperature setting in the vehicle, the colour of the ambient lighting will change briefly.

GREETING

- When you get into the vehicle, a special light animation will play.

Switching the interior lighting switch-off delay time on/off

Multimedia system:

Settings ▶▶ Lights ▶▶ Interior/exterior lighting ▶▶ Interior lighting switch-off delay

- Activate or deactivate Interior lighting switch-off delay.

  If this function is active, the interior lighting will be switched on for a short time after the end of the journey.

Changing bulbs

Instructions for replacing illuminants

WARNING
Risk of burns from hot component parts whilst replacing a bulb

Bulbs, lamps and plug connectors can become very hot during operation.

When replacing a bulb, you could burn yourself on these component parts.

► Allow the component parts to cool down before replacing the bulbs.

IMPORTANT SAFETY NOTES

- Before changing the bulbs, switch off the vehicle's lighting system and the vehicle. This will prevent a short circuit.
- Use only spare bulbs of the same type and with the correct voltage.
- Use bulbs only in enclosed lamps that have been designed for them.
- Do not use any illuminant that has been dropped or has scratches on its glass tube. Otherwise, the illuminant may explode.
- The illuminant may explode under the following conditions:
  - if it is hot and you touch it
  - if you drop it
  - if you scratch it
- Stains on the glass tube will reduce the service life of the illuminant. Do not touch the glass tube with your bare hands. If necessary, clean the glass tube with alcohol or spirits while it is cold and wipe it down with a lint-free cloth.
- Protect light bulbs from humidity and do not bring them into contact with liquids.

Always ensure the bulbs are firmly secured.

HAVE THE FOLLOWING LIGHT SOURCES CHANGED AT A QUALIFIED SPECIALIST WORKSHOP ONLY:

- Additional turn signal lamps on the outside mirror
- Bulbs in the licence plate lighting

If your vehicle is equipped with LED headlamps, contact a qualified specialist workshop.

Bulbs and lamps are major elements in vehicle safety. Therefore, ensure that they are always working. Have the headlamp setting checked regularly.

If the new light source also does not light up, consult a qualified specialist workshop.

Replacing front light bulbs (vehicles with halogen headlamps)

OVERVIEW OF FRONT ILLUMINANT TYPES

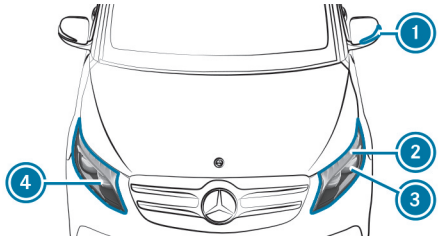

1. Additional turn signal lamp on the outside mirror: LED
2. Turn signal light: PY 21 W
3. Low beam: H7 55 W
4. High beam/side/parking lights/daytime running lights: H15 55 W/15 W

REPLACING ILLUMINANTS IN THE HEADLAMP

WARNING
Risk of burns from hot component parts whilst replacing a bulb

Bulbs, lamps and plug connectors can become very hot during operation.

When replacing a bulb, you could burn yourself on these component parts.

- Allow the component parts to cool down before replacing the bulbs.

Requirements

- The vehicle must be turned off.
- The lighting system is switched off.
- The appropriate front wheel is turned inwards.
- **Low beam:** you will need a H7 55 W illuminant.
- **Turn signal light:** you will need a PY 21 W illuminant.
- **High beam / side/parking lights / daytime running lights:** you will need an H15 55 W/15 W illuminant.

FITTING/REMOVING THE COVER IN THE FRONT WHEEL ARCH

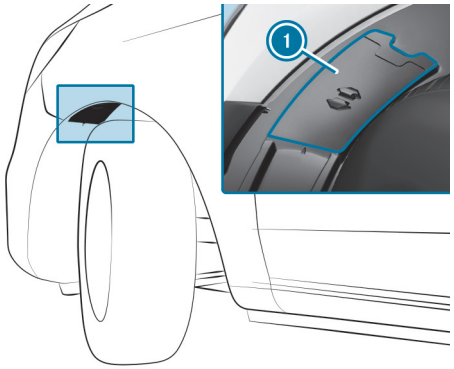

- **To remove:** grip the centre of cover 1, slide it upwards and pull it out.
  The cover will hang downwards on the strap.
- **To fit:** insert cover 1 at the top and slide it downwards until it engages.

LOW BEAM

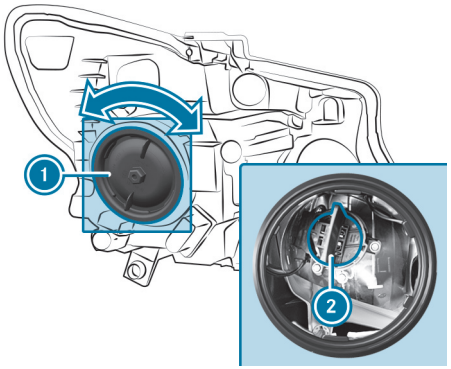

- Remove the cover in the front wheel arch.
- Turn housing cover ① anti-clockwise and remove it.
- Turn socket ② for low beam anti-clockwise and pull it out.
- Pull the bulb out of socket ②.
- Insert the new bulb into socket ②.
- Insert socket ② and turn it clockwise to tighten it.
- Press on housing cover ① and turn it clockwise to tighten it.
- Replace the cover in the front wheel arch.

HIGH BEAM, SIDE/PARKING LIGHTS AND DAYTIME RUNNING LIGHTS

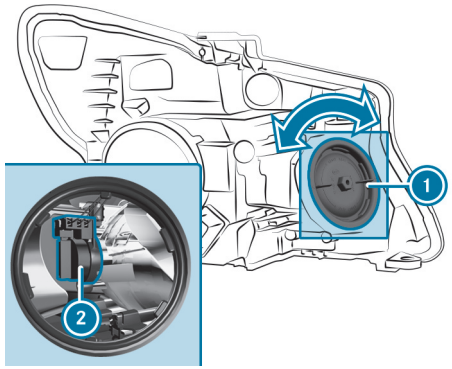

- Open the bonnet (→ page 639).
- Turn housing cover ① anti-clockwise and remove it.
- Pull out the bulb with socket ②.
- Insert the new bulb with socket ② and engage it as far as it will go.
- Press on housing cover ① and turn it clockwise to tighten it.
- Close the bonnet.

TURN SIGNAL LIGHTS

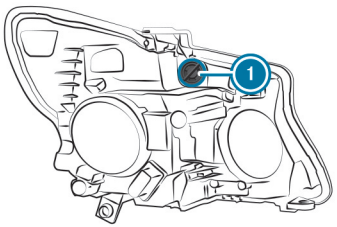

- Open the bonnet (→ page 639).

- Turn socket (1) anti-clockwise and pull it out.
- Pull the bulb out of socket (1).
- Insert the new bulb into socket (1).
- Insert socket (1) and turn it clockwise until it engages.
- Close the bonnet.

Replacing rear bulbs

OVERVIEW OF REAR ILLUMINANT TYPES

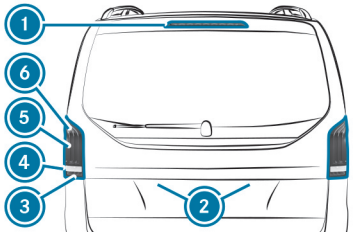

Vehicles with standard tail lamp

(1) Third brake light: LED
(2) Licence plate lighting: LED
(3) Rear fog light (driver's side): P 21 W
(4) Reversing light: P 21 W
(5) Brake light, tail light/parking lights: P 21 W
(6) Turn signal light: P 21 W

Vehicles with LED tail lamps

(1) Third brake light: LED
(2) Licence plate lighting: LED
(3) Rear fog light (driver's side): LED
(4) Reversing light: W 16 W
(5) Brake light, tail light/parking lights: LED
(6) Turn signal light: LED

REPLACING ILLUMINANTS IN THE TAIL LAMP

> ⚠ **WARNING**
> Risk of burns from hot component parts whilst replacing a bulb
>
> Bulbs, lamps and plug connectors can become very hot during operation.
>
> When replacing a bulb, you could burn yourself on these component parts.
>
> ▶ Allow the component parts to cool down before replacing the bulbs.

Requirements

- The vehicle must be turned off.
- The lighting system is switched off.
- **Standard tail lamp:** you will need a P 21 W illuminant.
- **LED tail lamp:** you will need a W 16 W illuminant.

REMOVING THE TAIL LAMP

NOTE
Damage to the paintwork during tail lamp removal

The paintwork may be damaged when the tail lamps are removed. The tail lamp may, for example, scratch the paintwork when it is removed.

- Remove the tail lamps carefully.
- Mercedes-Benz recommends having the tail lamp light sources replaced at a qualified specialist workshop.

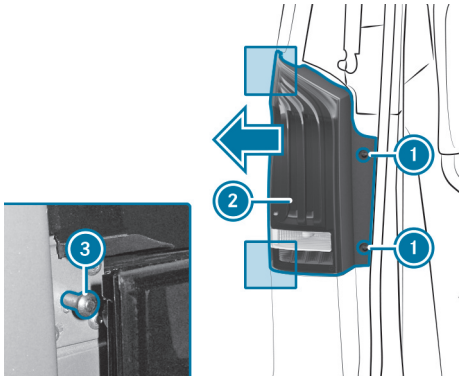

Please note that you can change the bulb of the reversing light only in the case of an LED tail lamp.

- Open the tailgate.

You will find a screwdriver in the vehicle tool kit (→ page 683).

- Unscrew two side screws 1.
- Push tail lamp 2 outwards against bolts 3 as far as it will go.
- Press tail lamp 2 off outwards and away from bolts 3.
- Pull the connector off the bulb mount of tail lamp 2.

INSTALLING THE TAIL LAMP

- Push the connector into the bulb mount of tail lamp 2.
- Push tail lamp 2 onto bolts 3 from the side and press it against the vehicle.
- Tighten two side screws 1.

STANDARD TAIL LAMP

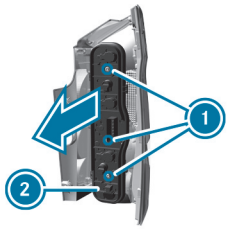

- Unscrew three screws 1 and remove bulb mount 2 from the tail lamp.

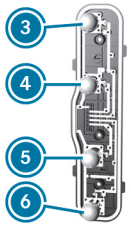

Bulb mount

3 Turn signal lights
4 Brake light, tail light, parking light
5 Reversing lights
6 Rear fog light (on the driver's side only)

- Remove the tail lamp.
- Gently turn the bulb anti-clockwise and take it out of the socket.
- Push the new bulb into the socket and turn it clockwise to screw it in.
- Insert bulb mount 2 in the tail lamp and tighten all three screws 1.
- Install the tail lamp.

LED TAIL LAMP

- Remove the tail lamp.
- Unscrew housing cover 1 by turning it anti-clockwise.
- Turn the socket anti-clockwise and pull it out.
- Pull the bulb out of the socket.
- Insert the new bulb in the socket.
- Insert the socket and rotate it clockwise to tighten it.
- Press on housing cover 1 and rotate it clockwise to tighten it.
- Install the tail lamp.

Replacing interior light bulbs

REPLACING ILLUMINANTS IN THE INTERIOR

> ⚠ **WARNING**
> Risk of burns from hot component parts whilst replacing a bulb
>
> Bulbs, lamps and plug connectors can become very hot during operation.
>
> When replacing a bulb, you could burn yourself on these component parts.
>
> - Allow the component parts to cool down before replacing the bulbs.

Requirements:

- The interior lighting has been switched off.
- **Rear and load compartment lamp:** you will need a T10 6W xenon illuminant.

- **Interior and surround lighting:** you will need a W 5 W illuminant.
- **Signal and ambient lamp in the tailgate:** you will need a W 5 W illuminant.

REAR AND LOAD COMPARTMENT LAMPS

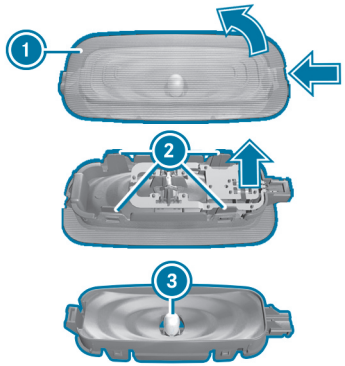

- ▶ Push in the catch spring of lens ① with a suitable object, e.g. a screwdriver, and then prise off the lens with the lamp housing.
- ▶ Push the lugs of socket ② inwards.
- ▶ Remove illuminant ③ from the lamp housing.
- ▶ Insert the new light bulb.
- ▶ Position the lens on the lamp housing and engage it.
- ▶ Align the lens with the lamp housing and engage it.

ADDITIONAL INTERIOR AND SURROUND LIGHTING

DEPENDING ON THE EQUIPMENT, REPLACING THE ILLUMINANTS AS DESCRIBED HERE APPLIES TO THE FOLLOWING LAMPS:

- The sun visor mirror lamp
- The ambient lamp at the bottom of the front door
- The ambient lamp on the inside of the tailgate

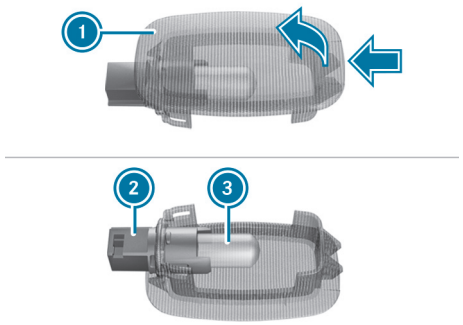

- ▶ Push in the catch spring of lamp housing ① with a suitable object, e.g. a screwdriver, and prise off lamp housing ①.
- ▶ Turn socket ② anti-clockwise and pull it out of lamp housing ①.
- ▶ Pull bulb ③ out of socket ②.
- ▶ Push new bulb ③ into socket ②.
- ▶ Screw socket ② into lamp housing ① by turning it clockwise.
- ▶ Place lamp housing ① in position on the left and engage it.

SIGNAL AND AMBIENT LAMP IN THE TAILGATE

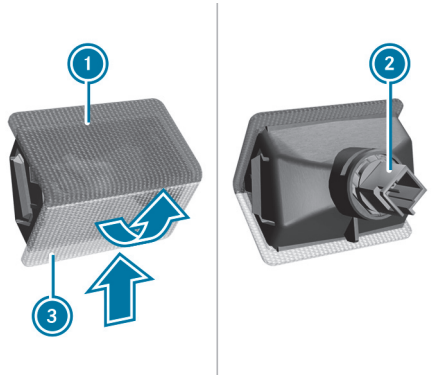

- Push in the catch spring of the lamp housing on the side of transparent lens 3 with a suitable object, e.g. a screwdriver, and prise off the lamp housing.
- Turn socket 2 anti-clockwise and pull it out of the lamp housing.
- Pull the bulb out of socket 2.
- Push the new bulb into socket 2.
- Screw socket 2 into the lamp housing by turning it clockwise.
- Place the lamp housing in position at the side of red lens 1 and engage it.

Windscreen wipers

Switching the windscreen wipers on and off

Requirements:

- The power supply is switched on.

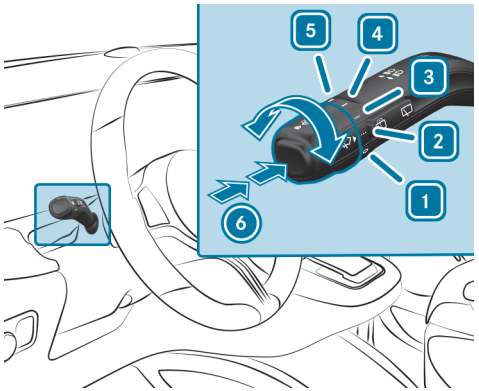

1 0 Windscreen wipers off
2 ••• Automatic wiping, normal
3 •••• Automatic wiping, frequent
4 — Continuous wiping, slow
5 = Continuous wiping, fast

► Turn the combination switch to the corresponding position 1 – 5.

► **Single wipe:** press the button on the combination switch in the direction of arrow 6 as far as the first point of resistance.

► **Washing:** press the button on the combination switch in the direction of arrow 6 beyond the point of resistance.

Switching the rear window wiper on and off

Requirements:

- The power supply is switched on.

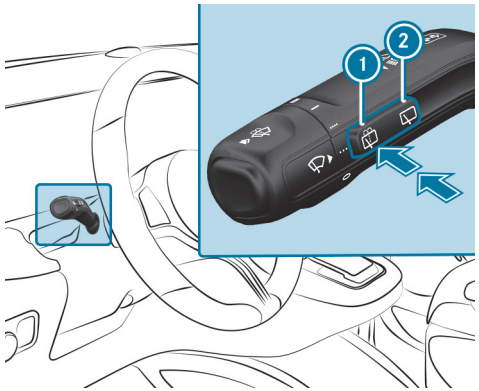

1 Single wipe/wash
2 Intermittent wiping

- **Single wipe:** press button (1) to the point of resistance.
- **Wiping with washer fluid:** press button (1) beyond the point of resistance.
- **To switch intermittent wiping on or off:** press button (2).

  The [symbol] symbol will appear on the driver's display when the rear window wiper is switched on.

Replacing the windscreen wiper blades

WARNING
Risk of becoming trapped if the windscreen wipers are switched on while wiper blades are being replaced

If the windscreen wipers begin to move while you are changing the wiper blades, you can be trapped by the wiper arm.

- Always switch off the windscreen wipers and vehicle before changing the wiper blades.

NOTE
Damage to the windscreen or rear window when you replace the wiper blade

If a wiper arm is folded back onto the windscreen or rear window and no wiper blade is fitted, the window may be damaged by the force of the impact.

- Never fold a wiper arm back onto the windscreen or rear window without a wiper blade fitted. Hold the wiper arm firmly when a wiper blade is being replaced.

NOTE
Damage to bonnet or windscreen wipers when opening the bonnet

If the windscreen wipers have been folded back from the windscreen when the bonnet is opened, the windscreen wipers or the bonnet may be damaged.

- Ensure that the windscreen wipers have not been folded back from the windscreen.

REMOVING THE WIPER BLADES

- Fold the wiper arms away from the windscreen.

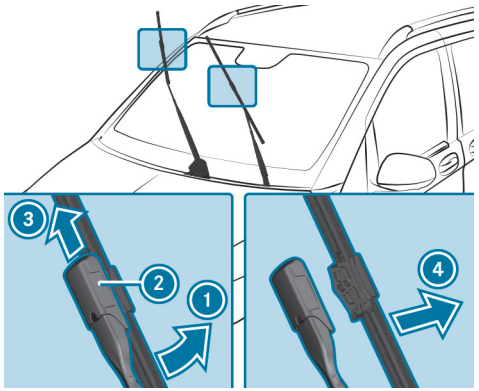

- Hold the wiper arm with one hand. With the other hand, turn the wiper blade away from the wiper arm in the direction indicated by the arrow 1 as far as it will go.
- Slide the catch 2 away from the wiper arm in the direction indicated by the arrow 3 until it engages in the removal position.
- Remove the wiper blade from the wiper arm in the direction indicated by the arrow 4.

FITTING THE WIPER BLADES

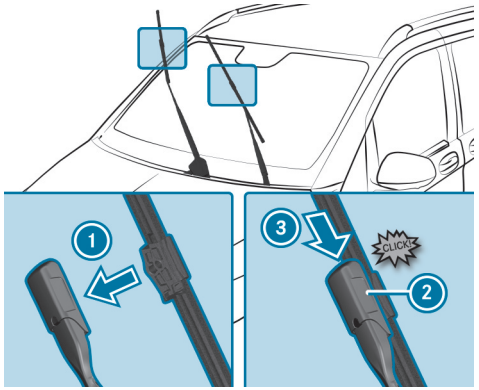

- Insert the new wiper blade into the wiper arm in the direction indicated by the arrow 1.
- Slide the catch 2 in the direction indicated by the arrow 3 until it engages in the locking position.
- Ensure that the wiper blade is seated correctly.
- Fold the wiper arms back onto the windscreen.

MAINTENANCE DISPLAY

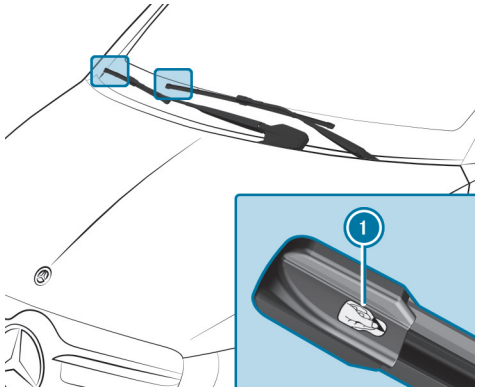

- Remove the protective film 1 from the maintenance displays on the tips of the newly fitted wiper blades.

If the colour of the maintenance display changes from black to yellow, the wiper blades should be replaced.

> ⓘ The time it takes for the colour to change varies depending on the usage conditions.

Replacing the windscreen wiper blades (WET WIPER SYSTEM)

WARNING
Risk of becoming trapped if the windscreen wipers are switched on while wiper blades are being replaced

If the windscreen wipers begin to move while you are changing the wiper blades, you can be trapped by the wiper arm.

- Always switch off the windscreen wipers and vehicle before changing the wiper blades.

WARNING
Risk of injury from using the windscreen wipers when the bonnet is open

If the windscreen wipers start moving when the bonnet is open, you could be trapped by the wiper linkage.

- Always switch off the windscreen wipers and vehicle before opening the engine bonnet.

REMOVING THE WIPER BLADES

- Fold the wiper arms away from the windscreen.

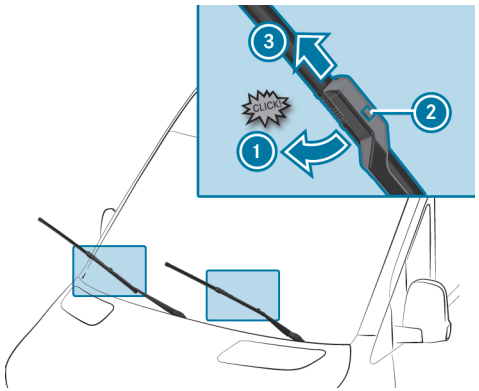

- Hold the wiper arm with one hand. With the other hand, turn the wiper blade in the direction indicated by the arrow 1 beyond the point of resistance.
  The wiper blade engages in the replacement position with a click.
- Press the release button 2, pull the wiper blade in the direction indicated by the arrow 3 and remove.

FITTING THE WIPER BLADES

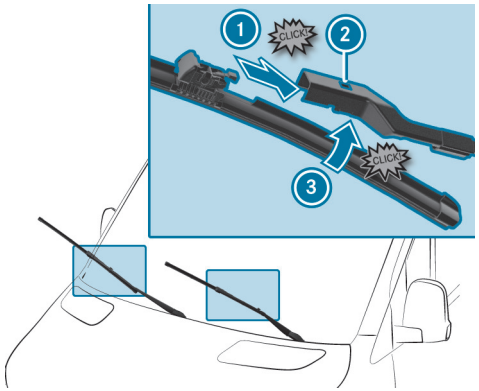

- Push the new wiper blade onto the wiper arm in the direction indicated by the arrow ① until the release button in the recess ② engages.
- Rotate the wiper blade toward ③ the wiper arm until it engages.
  The wiper blade engages with an audible click.
- Fold the wiper arm back onto the windscreen.

ⓘ Check the condition of the wiper blades regularly and replace them in the event of visible damage or ongoing smearing.

MAINTENANCE DISPLAY

There is a service indicator at the tip of the newly mounted wiper blades.

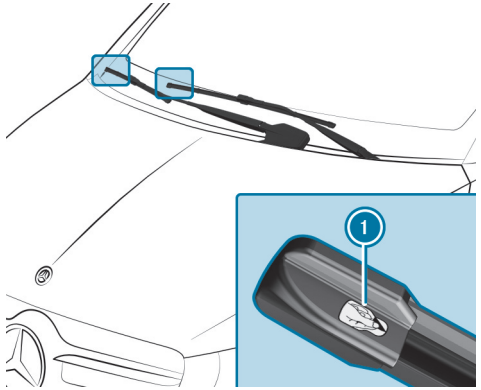

- Remove the protective film ① from the service indicator.

When the colour of the service indicator changes from black to yellow, replace the wiper blades.

Replacing rear window wiper blades

TAILGATE

NOTE
Damage to the windscreen or rear window when you replace the wiper blade

If a wiper arm is folded back onto the windscreen or rear window and no wiper blade is fitted, the window may be damaged by the force of the impact.

- Never fold a wiper arm back onto the windscreen or rear window without a wiper blade fitted. Hold the wiper arm firmly when a wiper blade is being replaced.

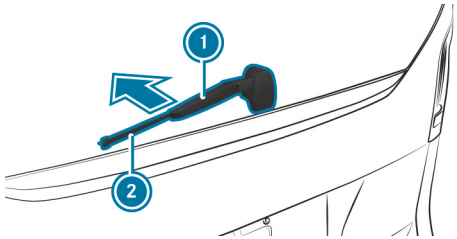

- Fold wiper arm ① away from the rear window until it engages in the replacement position.
- Keep hold of wiper arm ① and pull wiper blade ② off the wiper arm in the direction of the arrow.
- Place new wiper blade ② on wiper arm ①.
- Keep hold of wiper arm ① and push wiper blade ② in the opposite direction to the arrow until it engages.

- Make sure that wiper blade (2) is seated correctly.
- Fold wiper arm (1) back onto the rear window.

Setting the sensitivity of the rain sensor

Multimedia system:

→ [⌂] ▸▸ Settings ▸▸ Vehicle

- Select Rain sensor sensitivity.
- Set sensitivity to Low, Normal or High.

Mirrors

Operating the outside mirrors

WARNING
Risk of accident due to adjusting the vehicle settings while the vehicle is in motion

YOU COULD LOSE CONTROL OF THE VEHICLE IN THE FOLLOWING SITUATIONS IN PARTICULAR:

- if you adjust the driver's seat, the head restraint, the steering wheel or the mirror while the vehicle is in motion
- if you fasten your seat belt while the vehicle is in motion

▶ Before starting the vehicle: in particular, adjust the driver's seat, head restraint, steering wheel and mirror, and fasten your seat belt.

WARNING
Risk of accident due to misjudgement of distance when using the outside mirror

The outside mirrors reflect objects on a smaller scale. The objects in view are in fact closer than they appear.

▶ Therefore, always look over your shoulder in order to ensure that you are aware of the actual distance between you and the road users driving behind you.

ADJUSTING THE OUTSIDE MIRRORS ELECTRICALLY

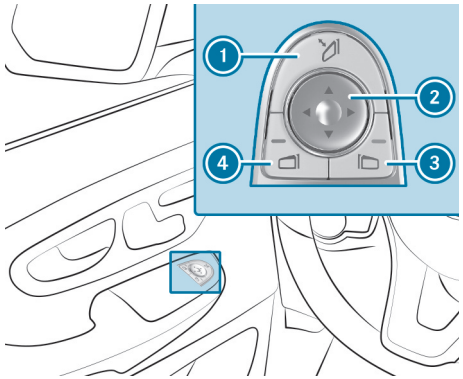

▶ Switch on the power supply or the vehicle.

▶ Press button 3 or 4 to select the outside mirror to be adjusted.

► Adjust the position of the mirror glass using button ②.

FOLDING THE ELECTRIC OUTSIDE MIRRORS IN/OUT

NOTE
Damage to the electric outside mirrors due to manual or forced folding in.

If the electric outside mirrors are folded in or out manually, the outside mirrors may be damaged and will not engage properly.

If the outside mirrors are not folded in at the car wash, the wash brushes may forcibly fold in and damage the outside mirrors.

► Fold and unfold the outside mirrors electrically only.

► Before washing the vehicle in an automatic car wash, fold in the outside mirrors.

► Switch on the power supply or the vehicle.

► Briefly press button ①.

You will no longer be able to fold in the outside mirrors once you reach a speed greater than 47 km/h.

ENGAGING THE OUTSIDE MIRRORS
If an outside mirror has been forcibly disengaged forwards or backwards, proceed as follows.

► Press and hold button ① until you hear a click followed by the mirror audibly engaging in position.
The mirror housing will now be engaged and you will be able to adjust the outside mirrors as normal.

RESETTING THE OUTSIDE MIRRORS

ⓘ If the battery has been disconnected or completely discharged, the outside mirrors must be reset. Only then will the automatic mirror folding function work properly.

► Switch on the power supply or the vehicle.

► Briefly press button ①.

HEATING THE OUTSIDE MIRRORS
Vehicles without a rear window heater: at temperatures below 15°C, the mirror heater will automatically switch on permanently once the vehicle has been started.

Vehicles with a rear window heater: at temperatures below 15°C, the mirror heater will automatically switch on for ten minutes once the vehicle has been started. The mirror heater can also be switched on together with the rear window heater.

► Switch on the vehicle.

► Press the REAR button on the climate control operating unit.
The indicator lamp on the REAR button will light up and the mirror heater will be switched on together with the rear window heater.

Using the digital rear-view mirror

The vehicle may be fitted with a digital inside rear-view mirror. This uses a camera in the rear window and a display integrated in the mirror to provide a better view to the rear. The rear-view mirror can be used either as a standard rear-view mirror or as a display.

To prevent glare from the digital rear-view mirror, first set the digital rear-view mirror as the standard rear-view mirror.

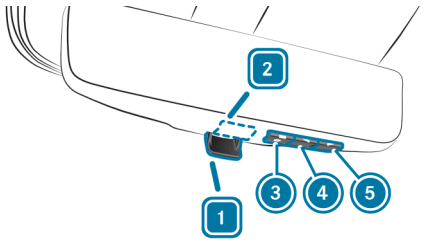

Certain types of sunlight, e.g. sun low on the horizon or light from another intense light source, can reduce the display's contrast and cause it to become too bright. In such situations, objects on the display may be obscured or difficult to see. In these cases, be particularly careful and adapt your driving style accordingly.

Drivers must always wear the necessary personal visual aids required for them to drive a vehicle. Drivers with presbyopia (age-related long-sightedness) should, if necessary, wear visual aids with multifocal lenses to be sufficiently able to see traffic including via the displays.

ⓘ If the camera in the rear window is dirty, operate the rear window wiper with washer fluid (⟶ page 309) or clean the rear window manually. Observe the notes on cleaning the digital rear-view mirror (⟶ page 656).

- **To use the standard rear-view mirror:** move the switch to position 1.
- **To use the display:** move the switch to position 2.

ADJUSTING THE DISPLAY BRIGHTNESS

ⓘ The digital rear-view mirror is equipped with light sensors on the front and back and automatically adjusts the brightness of the display to the lighting conditions. Do not cover the light sensors, e.g. with a sticker.

- Press menu button 3 once.
- Press button 4 to reduce the display brightness.

or

- Press button 5 to increase the display brightness.

ADJUSTING THE ANGLE OF THE CAMERA

- Press menu button 3 twice.
- Press button 4 to move the angle downwards.

or

- Press button 5 to move the angle upwards.

ERROR MODE OF THE DIGITAL REAR-VIEW MIRROR

If a system error occurs, e.g. if the camera fails, a crossed-out camera will appear at the top left of the display and no camera image will be visible in the mirror.

- Switch to the standard rear-view mirror if there is a system error.

Automatic anti-dazzle mirrors function

WARNING
Risk of acid burns and poisoning due to the anti-dazzle mirror electrolyte

Electrolyte may escape if the glass in an automatic anti-dazzle mirror breaks.

The electrolyte is hazardous to health and causes irritation. It must not come into contact with your skin, eyes, respiratory organs or clothing or be swallowed.

► If you come into contact with electrolyte, observe the following:
- Immediately rinse the electrolyte from your skin with water and seek medical attention.
- If electrolyte comes into contact with your eyes, immediately rinse them thoroughly with clean water and seek medical attention.
- If the electrolyte is swallowed, immediately rinse your mouth out thoroughly. Do not induce vomiting. Seek medical attention immediately.
- Immediately change out of clothing which has been contaminated with electrolyte.
- If an allergic reaction occurs, seek medical attention immediately.

When light from a headlamp hits the sensor on the inside rear-view mirror, the inside rear-view mirror will automatically dim.

SYSTEM LIMITS

THE SYSTEM WILL NOT GO INTO ANTI-DAZZLE MODE IF:

- The vehicle is switched off.
- Reverse gear is engaged.
- The interior lighting is switched on.
- The incident light from the headlamps is blocked by objects in the load compartment, for example, and does not hit the sensor on the inside rear-view mirror.

Operating sun visors

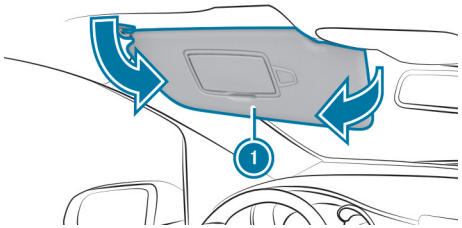

- **Glare from front:** fold sun visor (1) downwards.
- **Glare from the side:** swivel sun visor (1) to the side.

Back to Contents

Climate control

This interactive PDF works like a website – tap or click a button to jump straight to where you want to go.
You can return here at any time via the navigation bar at the top left.

Overview of climate control systems
Operating climate control systems
Auxiliary heating
Operating air vents

Overview of climate control systems

Notes on climate control

An interior filter in combination with the prefilter in the engine compartment must always be used so that the air conditioning system, pollution level monitoring and the air filtration work correctly. Use filters recommended and approved by Mercedes-Benz. Always have maintenance work carried out at a qualified specialist workshop.

TEMPMATIC overview

The indicator lamps on the buttons signal that the functions in question have been activated.

TEMPMATIC WITH A HOT-WATER AUXILIARY HEATER (STATIONARY HEATER)

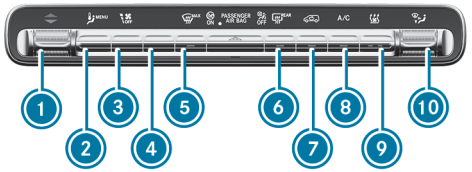

1. Sets the temperature
2. MENU Calls up the air conditioning menu
3. Sets the airflow or switches climate control on/off
4. Button inoperative
5. MAX Demists the windscreen
6. REAR Switches the rear window heater on/off
7. Switches air-recirculation mode on/off (→ page 326)
8. A/C Switches the A/C function on/off (→ page 324)
9. Switches the stationary heater on/off (→ page 61)
   Vehicles without stationary heater: button inoperative
10. Sets the air distribution

THERMOTRONIC overview

The indicator lamps on the buttons signal that the functions in question have been activated.

THERMOTRONIC WITHOUT HOT-WATER AUXILIARY HEATER (STATIONARY HEATER)

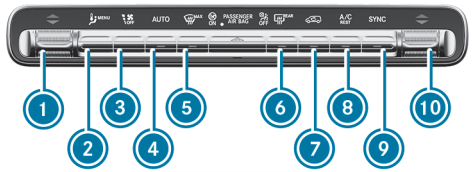

1. Sets the temperature on the driver's side
2. MENU Calls up the air conditioning menu

③ Sets the airflow or switches off climate control
④ AUTO Automatically regulates climate control (→ page 324)
⑤ Demists the windscreen
⑥ Switches the rear window heater on/off
⑦ Switches air-recirculation mode on/off (→ page 326)
⑧ A/C Switches the A/C function on/off (→ page 324)
Switches residual heat on/off (→ page 327)
⑨ SYNC Activates/deactivates synchronisation (→ page 325)
⑩ Sets the temperature on the front passenger side

THERMOTRONIC WITH HOT-WATER AUXILIARY HEATER (STATIONARY HEATER)

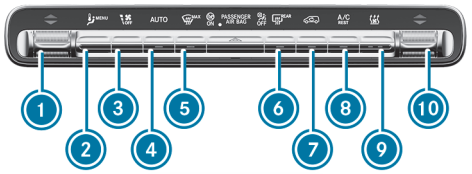

① Sets the temperature on the driver's side
② MENU Calls up the air conditioning menu
③ Sets the airflow or switches off climate control
④ AUTO Automatically regulates climate control (→ page 324)
⑤ Demists the windscreen
⑥ Switches the rear window heater on/off
⑦ Switches air-recirculation mode on/off (→ page 326)
⑧ A/C Switches the A/C function on/off (→ page 324)
Switches residual heat on/off (→ page 327)
⑨ Switches the stationary heater on/off (→ page 61)
⑩ Sets the temperature on the front passenger side

Overview of the rear operating unit

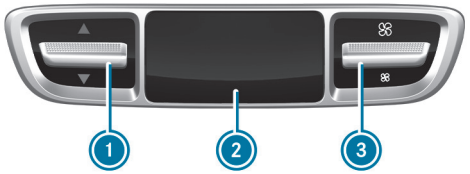

① Sets the temperature (→ page 325)
② Display
③ Sets the airflow or switches off rear climate control (→ page 325)

Operating climate control systems

Calling up the air conditioning menu

CALLING UP THE AIR CONDITIONING MENU VIA THE MEDIA DISPLAY

- Select one of the temperature displays at the lower edge of the media display.

CALLING UP THE AIR CONDITIONING MENU USING THE BUTTON ON THE AIR CONDITIONING CONTROL PANEL

- Press the [MENU] button.

Switching the climate control system on/off

TEMPMATIC

- **To switch on:** set the airflow to level 1 or higher using the [OFF] button.

THERMOTRONIC

- **To switch on:** press the [AUTO] button.

DEACTIVATING

- Set the airflow to level 0 using button [OFF].

If the climate control is switched off, the windows may mist up more quickly. Therefore, switch the climate control off only temporarily.

Switching climate control in the rear compartment on/off via the rear operating unit

- **To switch on:** set the airflow to 1 or higher using the [ ] button.
- **To switch off:** set the airflow to level 0 using the [ ] button.

Switching climate control in the rear passenger compartment on/off when the vehicle is started

Multimedia system:

Climate menu >> Rear

ACTIVATING CLIMATE CONTROL IN THE REAR PASSENGER COMPARTMENT WHEN THE VEHICLE IS STARTED

- Select [ ].
- Select Previous setting.

  When the vehicle is started, the status of the rear air conditioning will correspond to the last active setting. If pre-entry climate control was used with active rear air conditioning, this will be used as the last active setting.

SWITCHING OFF CLIMATE CONTROL IN THE REAR PASSENGER COMPARTMENT WHEN THE VEHICLE IS STARTED

- Select [⚙].
- Select OFF.
  The rear air conditioning will always be switched off when the vehicle is started.

Switching the A/C function on/off using the air conditioning control panel

The A/C function controls the climate and dries the air inside the vehicle.

- Press the [A/C]/[A/C REST] button.

ⓘ Switch off the A/C function only briefly. Otherwise, the windows could mist up more quickly.

ⓘ Condensation may leak from the underside of the vehicle in cooling mode. This is not a sign of a defect.

Setting climate control to automatic mode (THERMOTRONIC)

In automatic mode, the set temperature is controlled and maintained at a constant level by the air supply.

- **To switch on:** press the [AUTO] button.
- **To switch to manual mode:** press the [AUTO] button again.

In automatic mode, you can choose between five different air quantities using the [OFF] button or on the air conditioning menu. Automatic mode will be retained.

Overview of the air distribution settings

THE SYMBOLS ON THE MEDIA DISPLAY INDICATE THE VENTS THROUGH WHICH THE AIRFLOW IS BEING DIRECTED:

[⊞]	Demister and side air vents
[⊡]	Centre and side air vents
[⊡]	Footwell and side air vents

Setting the air distribution via the air conditioning control panel (TEMPMATIC)

- Press the [⊡] button up or down.
  The air conditioning menu shows the air distribution positions.
- Select the desired position for air distribution.

ⓘ When the air conditioning system is switched on, at least one zone is always active. However, several air distribution options can be selected at the same time; for example, to set the climate control for the vehicle interior and the footwells simultaneously.

Setting air distribution using the air conditioning menu

Multimedia system:

Climate menu ▶▶ Front

▶ To set the air distribution: select [ ], [ ] or [ ].

ⓘ When automatic mode is active, the buttons for setting the air distribution are automatically deactivated.

Adjusting the airflow via the air conditioning control panel

▶ Press the [ ] button up or down.

Vehicles with rear climate control: use the air conditioning menu or the rear control panel to set the airflow for the rear compartment.

Setting the temperature via the air conditioning control panel

▶ Press the [ ] button up or down.

Vehicles with rear climate control: use the air conditioning menu or the rear control panel to set the temperature for the rear compartment.

Switching the synchronisation function on/off via the air conditioning control panel

Requirements

- The vehicle does not have a hot-water auxiliary heater.

The synchronisation function controls the climate control function centrally. The temperature and air distribution setting for the driver's side will be adopted automatically for all climate control zones.

▶ Press the [SYNC] button.

The synchronisation function will switch off if the settings for one of the other climate zones are changed.

Demisting the windows

WINDOWS MISTED UP ON THE INSIDE

▶ TEMPMATIC: switch on the A/C function.

▶ THERMOTRONIC: press the [AUTO] button.

▶ If the windows remain misted up: press the [MAX] button.

▶ If necessary, adjust the airflow manually (→ page 325).

DEMISTING THE WINDSCREEN

If the "Demist windscreen" function has been switched on, any reduction in heating and air conditioning power will automatically be deactivated.

- **To switch on:** press the MAX button.
  The temperature, airflow and air distribution will be regulated automatically to optimise the demisting effect. Air-recirculation mode will be deactivated.

Depending on operation, you can demist and dry the windscreen more quickly with the following settings. Select the settings only for as long as it takes for the windscreen and front side windows to be cleared.

- Switch off the rear air conditioning system (→ page 323).
- THERMOTRONIC: switch off automatic mode (→ page 324).
- Select the position for air distribution (→ page 325).
- Increase the temperature at the front to the maximum (→ page 325).
- Increase the airflow to the maximum (→ page 325).
- Close the side air vents (→ page 345).

DEACTIVATING

- TEMPMATIC: press the MAX button again.
- THERMOTRONIC: press the MAX button again or press AUTO.

WINDOWS MISTED UP ON THE OUTSIDE

- Switch on the windscreen wipers.

Switching air-recirculation mode on/off

- Press the button.
  The interior air will be recirculated.

Air-recirculation mode will automatically switch to fresh air mode after a while.

> When air-recirculation mode is switched on, the windows may mist up more quickly. Switch on air-recirculation mode only briefly.

AIR-RECIRCULATION MODE WILL AUTOMATICALLY SWITCH ON IN THE FOLLOWING CASES:

- in high outside temperatures
- while the vehicle is driving through a tunnel (vehicles with THERMOTRONIC and Navigation)
- when the wiping with washer fluid function is switched on (→ page 309)

If air-recirculation mode has been switched on automatically, the button indicator lamp will not light up. After a maximum of 30 minutes, fresh air will automatically be introduced again.

Convenience opening or closing with the recirculation button

WARNING
Risk of entrapment due to not paying attention during convenience closing

When the convenience closing feature is operating, parts of the body could become trapped in the closing area of the side window and the sliding sunroof.

- When the convenience closing feature is operating, monitor the entire closing process and make sure that no body parts are in the closing area.

WARNING
Risk of entrapment when opening a side window

When opening a side window, parts of the body could be drawn in or become trapped between the side window and window frame.

- When opening, make sure that nobody is touching the side window.
- Release the button immediately if somebody becomes trapped.

- **Convenience closing:** press the button until the side windows close automatically.
  The original position of the side windows is stored. Air-recirculation mode is activated.
- **To interrupt convenience closing:** release the button.
- **To continue convenience closing:** press and hold the button again.
- **Convenience opening:** press the button until the side windows open automatically.
  The side windows open automatically until they have reached their previously saved position. Air-recirculation mode will be deactivated.
- **To interrupt convenience opening:** release the button.
- **To continue convenience opening:** press the button again and hold pressed.

Switching the rear window heater on or off

Requirements

- The vehicle is switched on.

The rear window heater has a high energy consumption. You should switch off the rear window heater as soon as the rear window is clear.

- Press the REAR button.

Switching residual heat on/off via the air conditioning control panel

Requirements

- The vehicle is parked.

Residual heat can be used only in a vehicle with a diesel engine or a vehicle with a stationary heater in combination with the THERMOTRONIC air conditioning control panel.

It is possible to make use of the residual heat from the engine to continue heating or ventilating the vehicle interior for approximately 30 minutes, depending on the temperature set.

► **To switch on:** press the A/C REST button.

Residual heat will be switched off automatically.

Auxiliary heating

Notes on auxiliary heating

DANGER
Risk of fatal injury due to poisonous exhaust gases

If the tailpipe is blocked or sufficient ventilation is not possible, poisonous exhaust gases such as carbon monoxide may enter the vehicle. This is the case in enclosed spaces or if the vehicle gets stuck in snow, for example.

- Always switch the stationary heater off in enclosed spaces without an air extraction system, e.g. in garages.
- Keep the tailpipe and the area around the vehicle free from snow when the engine or the stationary heater is running.
- Open a window on the side of the vehicle facing away from the wind to ensure an adequate supply of fresh air.

WARNING
Risk of fire due to hot stationary heater components and exhaust gases

Flammable materials such as leaves, grass or twigs may ignite.

- When the stationary heater is switched on, make sure that:
  - hot vehicle parts do not come into contact with flammable materials.
  - the exhaust gas can flow out of the stationary heater exhaust pipe unhindered.
  - the exhaust gas does not come into contact with flammable materials.

The heater for the auxiliary heating is fitted at the front of the vehicle underbody. The emissions outlet is on the left side of the vehicle below the front door.

WARNING
Risk of poisoning during work on the auxiliary warm-air heater

If work on the heat exchanger of the auxiliary warm-air heater is not performed correctly, exhaust fumes could leak into the passenger compartment.

► Have all work on the auxiliary warm-air heater carried out at a qualified specialist workshop.

If you are transporting hazardous materials, comply with the relevant safety regulations. Place objects a sufficient distance from the auxiliary heating outlet opening.

NOTE
Damage to the auxiliary heating due to overheating

If the flow of hot air is blocked, the auxiliary heating may overheat and switch off.

► Do not block the flow of hot air.

NOTE
Battery discharge caused by stationary heater or stationary ventilation operation

Operating the stationary heater or stationary ventilation drains the battery.

► After heating or ventilating the vehicle twice, drive for a longer period of time.

Your vehicle may be equipped with either a hot-water auxiliary heater or an auxiliary warm-air heater.

The **hot-water auxiliary heater** is adjusted and operated using the button on the control panel and via the air conditioning menu or by remote control.

The **auxiliary warm-air heater** is adjusted and operated via the switch clock on the centre console.

Hot-water auxiliary heater

FUNCTION OF THE HOT-WATER AUXILIARY HEATER
Observe the notes on auxiliary heating (→ page 329).

The hot-water auxiliary heater has a heater booster, stationary heater and stationary ventilation function.

The stationary heater will automatically adapt its operating mode to changes in outside temperature and weather conditions. It is therefore possible that the stationary heater may switch from ventilation to heating mode or from heating to ventilation mode.

The stationary heater will automatically switch itself off after a maximum of 50 minutes. The booster heater function helps to heat up the vehicle while the engine is running and at low outside temperatures.

You can set up to three departure times for pre-entry climate control by remote control or via the air conditioning menu. The switch-on time will then be calculated based on the outside temperature and the activated departure time. This means that your vehicle will be preheated or ventilated by the set departure time.

If the departure time is reached and the vehicle is not started, the auxiliary heating will continue to run for approximately ten more minutes. It will then switch off automatically.

When the auxiliary heating is heating and the vehicle is started, the heater booster function of the auxiliary heating will be activated.

When the auxiliary heating is ventilating and the vehicle is started, the auxiliary heating will be automatically switched off.

SWITCHING THE HOT-WATER AUXILIARY HEATER ON/OFF VIA THE OPERATING UNIT

DANGER
Risk of fatal injury due to poisonous exhaust gases

If the tailpipe is blocked or sufficient ventilation is not possible, poisonous exhaust gases such as carbon monoxide may enter the vehicle. This is the case in enclosed spaces or if the vehicle gets stuck in snow, for example.

- ► Always switch the stationary heater off in enclosed spaces without an air extraction system, e.g. in garages.
- ► Keep the tailpipe and the area around the vehicle free from snow when the engine or the stationary heater is running.
- ► Open a window on the side of the vehicle facing away from the wind to ensure an adequate supply of fresh air.

WARNING
Risk of fire due to hot stationary heater components and exhaust gases

Flammable materials such as leaves, grass or twigs may ignite.

- ► When the stationary heater is switched on, make sure that:
  - hot vehicle parts do not come into contact with flammable materials.
  - the exhaust gas can flow out of the stationary heater exhaust pipe unhindered.
  - the exhaust gas does not come into contact with flammable materials.

NOTE
Battery discharge caused by stationary heater or stationary ventilation operation

Operating the stationary heater or stationary ventilation drains the battery.

- ► After heating or ventilating the vehicle twice, drive for a longer period of time.

Requirements

- The fuel tank is filled above the reserve level.

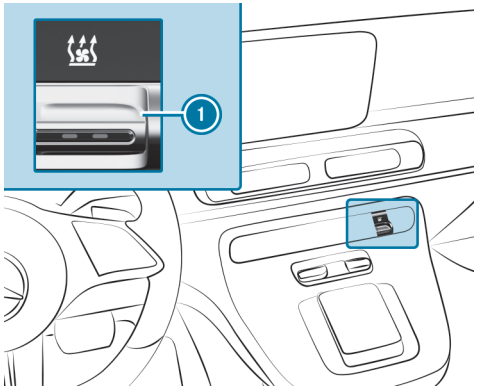

- Set the desired temperature (→ page 325).
  If the temperature is not altered before the auxiliary heating is switched on, the last temperature setting will be adopted.
- **To switch on:** press button 1.
  The red or blue indicator lamp on button 1 will light up.

THE COLOURS OF THE INDICATOR LAMP HAVE THE FOLLOWING MEANINGS:

- **Blue:** the stationary ventilation is switched on.
- **Red:** the stationary heater is switched on.
- **Yellow:** a departure time is preselected.

- **To switch off:** press button 1 again.

The stationary heater/ventilation will switch off automatically after a maximum of 50 minutes.

ADJUSTING THE HOT-WATER AUXILIARY HEATER BY REMOTE CONTROL

⚠ **DANGER**
Risk of fatal injury due to poisonous exhaust gases

If the tailpipe is blocked or sufficient ventilation is not possible, poisonous exhaust gases such as carbon monoxide may enter the vehicle. This is the case in enclosed spaces or if the vehicle gets stuck in snow, for example.

- Always switch the stationary heater off in enclosed spaces without an air extraction system, e.g. in garages.
- Keep the tailpipe and the area around the vehicle free from snow when the engine or the stationary heater is running.
- Open a window on the side of the vehicle facing away from the wind to ensure an adequate supply of fresh air.

⚠ **WARNING**
Risk of fire due to hot stationary heater components and exhaust gases

Flammable materials such as leaves, grass or twigs may ignite.

- When the stationary heater is switched on, make sure that:
  - hot vehicle parts do not come into contact with flammable materials.
  - the exhaust gas can flow out of the stationary heater exhaust pipe unhindered.
  - the exhaust gas does not come into contact with flammable materials.

NOTE
Battery discharge caused by stationary heater or stationary ventilation operation

Operating the stationary heater or stationary ventilation drains the battery.

► After heating or ventilating the vehicle twice, drive for a longer period of time.

Requirements

- The fuel tank is filled above the reserve level.

SWITCHING ON IMMEDIATELY

Remote control (example)

► Press and hold the ON button until the "ON" message appears on the remote control's display.

SETTING THE DEPARTURE TIME

► Briefly press the ON button.

► Continue to press the ◁ or ▷ button until the time to be changed appears on the display.

► Press the ON and OFF buttons simultaneously.
The symbol on the remote control display will flash.

► Set the required departure time with the ◁ and ▷ buttons.

► Press the ON and OFF buttons simultaneously.
The new departure time will be saved.

Up to three departure times can be saved.

ACTIVATING THE DEPARTURE TIME

► Briefly press the ON button.

► Select the required departure time with the ◁ and ▷ buttons.

► Press and hold the ON button.
The symbol, the departure time and, depending on the departure time selected, the letter **A**, **B** or **C** will appear on the remote control's display.

DEACTIVATING THE DEPARTURE TIME

► Select the desired departure time and press and hold the OFF button.
"OFF" will appear on the display.

CHECKING THE STATUS OF THE ACTIVE STATIONARY HEATER

► Briefly press the ON button.

SWITCHING OFF IMMEDIATELY

► Press and hold the OFF button.

OVERVIEW OF REMOTE CONTROL DISPLAYS (STATIONARY HEATING/VENTILATION)

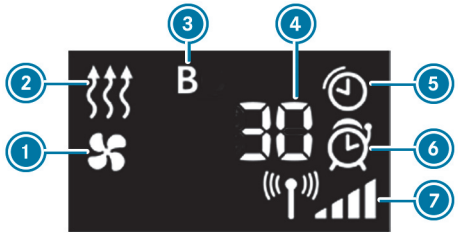

1. Stationary ventilation switched on
2. Stationary heating switched on
3. Selected departure time
4. Remaining stationary heating or ventilation time (in minutes)
5. Stationary heating or ventilation active
6. Departure time activated
7. Signal strength

FURTHER DISPLAY OPTIONS:

- **Time:** the selected departure time.
- **0 minutes:** the running time of the stationary heating will extend, because the operating temperature has not yet been reached when the engine is started.
- **OFF:** stationary heating or ventilation has been switched off.

REPLACING THE REMOTE CONTROL BATTERY (HOT-WATER AUXILIARY HEATER)

DANGER
Risk of death due to swallowing batteries

Batteries contain toxic and corrosive substances. If batteries are swallowed or otherwise enter the body, severe internal burns may occur within two hours.

There is a risk of fatal injury!

- ► Keep batteries out of the reach of children.
- ► If the battery cover does not close securely, do not use the remote control any longer and keep out of the reach of children.
- ► If batteries are swallowed or otherwise enter the body, seek medical attention immediately.

ENVIRONMENTAL NOTE
Environmental damage due to improper disposal of batteries

Batteries contain toxic and corrosive substances.

- ► Take discharged batteries to a qualified specialist workshop or to a collection point for used batteries.

Requirements

- A CR2450 lithium battery is available.

Mercedes-Benz recommends that you have the battery changed at a qualified specialist workshop.

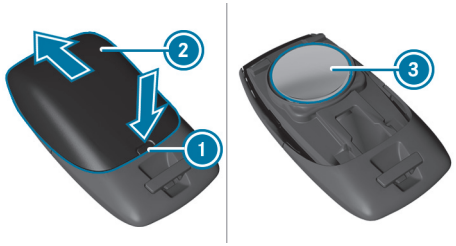

- Push a pointed object into recess 1.
- Slide battery cover 2 backwards in the direction of the arrow.
- Insert new battery 3 with the lettering facing upwards.
- Slide battery cover 2 onto the remote control in the opposite direction to the arrow until the battery cover engages.

RESOLVING PROBLEMS WITH THE HOT-WATER AUXILIARY HEATER

FAIL APPEARS ON THE REMOTE CONTROL DISPLAY

POSSIBLE CAUSE:

- Signal transmission between transmitter and receiver is malfunctioning.

- Change your position in relation to the vehicle, moving closer if necessary.

FAIL APPEARS ON THE REMOTE CONTROL DISPLAY

POSSIBLE CAUSE:

- The starter battery is not sufficiently charged.

- Charge the starter battery.

POSSIBLE CAUSE:

- The fuel tank is not filled up to the reserve level.

- Refuel at the nearest filling station.

FAIL APPEARS ON THE REMOTE CONTROL DISPLAY

POSSIBLE CAUSE:

- The auxiliary heating has malfunctioned.

- Have the auxiliary heating checked at a qualified specialist workshop.

Auxiliary warm-air heater

FUNCTION OF THE HOT-AIR AUXILIARY HEATER

Observe the notes on auxiliary heating (→ page 329).

The air-intake opening for the auxiliary warm-air heater is located on the inner side of the left front seat base. The warm-air outlet is on the rear side of the left front seat.

The auxiliary warm-air heater supplements the climate control system of your vehicle and has an auxiliary heating function.

The stationary heater will switch off automatically when the vehicle is switched off or when the set heating duration has elapsed.

The immediate heating mode of the auxiliary heating supports the climate control system when the engine is running and the outside temperature is low.

The switch clock for the auxiliary warm-air heater is located in the lower centre console.

You can use the switch clock to set up to three departure times for pre-entry climate control.

SWITCH CLOCK OVERVIEW (AUXILIARY WARM-AIR HEATER)

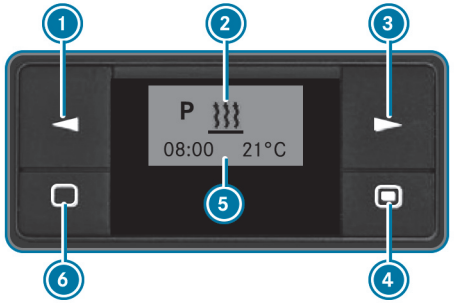

1. Select option/change values
2. Menu bar
3. Select option/change values
4. Press briefly: confirms a selection or setting
   Hold pressed: switches on immediate heating mode
5. Status line
6. Press briefly: switches switch clock on/cancels or terminates the settings on a menu
   Hold pressed: cancels all functions

SWITCHING THE SWITCH CLOCK ON (AUXILIARY WARM-AIR HEATER)

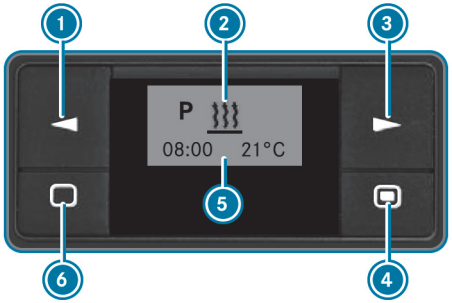

► Press button 6 .

ⓘ The switch clock will switch to standby mode after ten seconds. The display will go off.

SETTING THE SWITCH CLOCK (AUXILIARY WARM-AIR HEATER)

DANGER
Risk of fatal injury due to poisonous exhaust gases

If the tailpipe is blocked or sufficient ventilation is not possible, poisonous exhaust gases such as carbon monoxide may enter the vehicle. This is the case in enclosed spaces or if the vehicle gets stuck in snow, for example.

- Always switch the stationary heater off in enclosed spaces without an air extraction system, e.g. in garages.
- Keep the tailpipe and the area around the vehicle free from snow when the engine or the stationary heater is running.
- Open a window on the side of the vehicle facing away from the wind to ensure an adequate supply of fresh air.

WARNING
Risk of fire due to hot stationary heater components and exhaust gases

Flammable materials such as leaves, grass or twigs may ignite.

- When the stationary heater is switched on, make sure that:
  - hot vehicle parts do not come into contact with flammable materials.
  - the exhaust gas can flow out of the stationary heater exhaust pipe unhindered.
  - the exhaust gas does not come into contact with flammable materials.

NOTE
Damage to the auxiliary heating due to overheating

If the flow of hot air is blocked, the auxiliary heating may overheat and switch off.

- Do not block the flow of hot air.

NOTE
Battery discharge caused by stationary heater or stationary ventilation operation

Operating the stationary heater or stationary ventilation drains the battery.

- After heating or ventilating the vehicle twice, drive for a longer period of time.

SETTING THE TIME

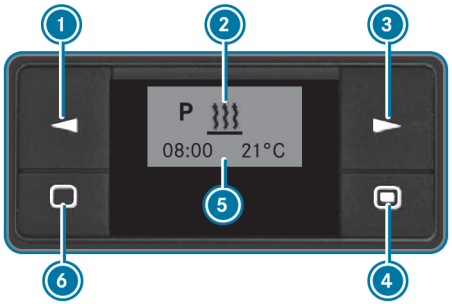

YOU MUST RESET THE DAY, TIME AND DEFAULT VALUE FOR THE OPERATING DURATION IN THE FOLLOWING CASES:

- initial operation
- after a voltage supply interruption (e.g. if the battery has been disconnected)
- after a malfunction

► Press button 1 or 3 until flashes on menu bar 2.

► Press button 4.

► Press button 1 or 3 until flashes.

► Press button 4.

► Use button 1 or 3 to set the hours.

► Press button 4.

► Use button 1 or 3 to set the minutes.

► Press button 4.

SETTING THE TIME FORMAT

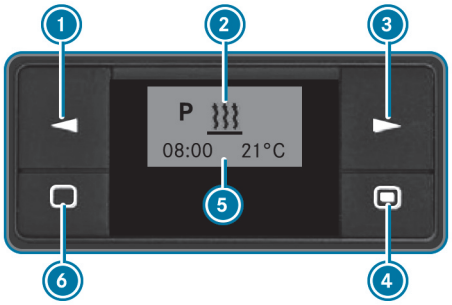

► Press button 1 or 3 until flashes on menu bar 2.

► Press button 4.

► Press button 1 or 3 until the symbol for the time format flashes.

► Press button 4.

► Select the desired time format using button 1 or 3.

► Press button 4.

SETTING THE DAY

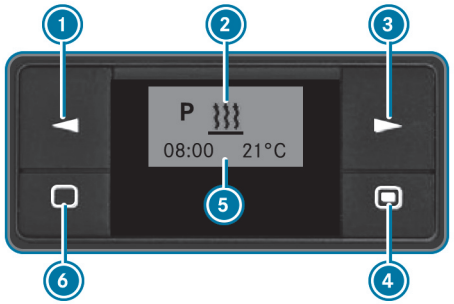

- Press button 1 or 3 until [ ] flashes on menu bar 2.
- Press button 4.
- Press button 1 or 3 until the symbol for the day flashes.
- Press button 4.
- Use button 1 or 3 to select the desired day of the week.
- Press button 4.

SWITCHING IMMEDIATE HEATING MODE ON/OFF

DANGER
Risk of fatal injury due to poisonous exhaust gases

If the tailpipe is blocked or sufficient ventilation is not possible, poisonous exhaust gases such as carbon monoxide may enter the vehicle. This is the case in enclosed spaces or if the vehicle gets stuck in snow, for example.

- Always switch the stationary heater off in enclosed spaces without an air extraction system, e.g. in garages.
- Keep the tailpipe and the area around the vehicle free from snow when the engine or the stationary heater is running.
- Open a window on the side of the vehicle facing away from the wind to ensure an adequate supply of fresh air.

WARNING
Risk of fire due to hot stationary heater components and exhaust gases

Flammable materials such as leaves, grass or twigs may ignite.

- When the stationary heater is switched on, make sure that:
  - hot vehicle parts do not come into contact with flammable materials.
  - the exhaust gas can flow out of the stationary heater exhaust pipe unhindered.
  - the exhaust gas does not come into contact with flammable materials.

NOTE
Damage to the auxiliary heating due to overheating

If the flow of hot air is blocked, the auxiliary heating may overheat and switch off.

- Do not block the flow of hot air.

NOTE
Battery discharge caused by stationary heater or stationary ventilation operation

Operating the stationary heater or stationary ventilation drains the battery.

- After heating or ventilating the vehicle twice, drive for a longer period of time.

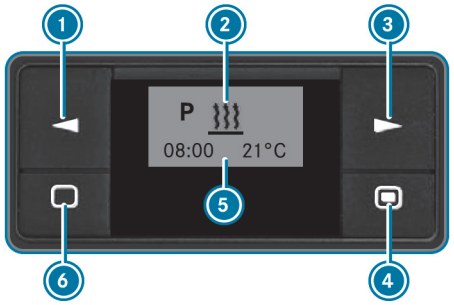

- **To switch on:** hold the button 4 pressed until flashes on menu bar 2.

  On will briefly appear on the display, followed by the operation time remaining or the symbol ∞ for continuous operation.

- **To switch off:** hold the button 6 pressed until Off appears on the display.

SETTING THE DEPARTURE TIME (AUXILIARY WARM-AIR HEATER)

DANGER
Risk of fatal injury due to poisonous exhaust gases

If the tailpipe is blocked or sufficient ventilation is not possible, poisonous exhaust gases such as carbon monoxide may enter the vehicle. This is the case in enclosed spaces or if the vehicle gets stuck in snow, for example.

- Always switch the stationary heater off in enclosed spaces without an air extraction system, e.g. in garages.
- Keep the tailpipe and the area around the vehicle free from snow when the engine or the stationary heater is running.
- Open a window on the side of the vehicle facing away from the wind to ensure an adequate supply of fresh air.

WARNING
Risk of fire due to hot stationary heater components and exhaust gases

Flammable materials such as leaves, grass or twigs may ignite.

- When the stationary heater is switched on, make sure that:
  - hot vehicle parts do not come into contact with flammable materials.
  - the exhaust gas can flow out of the stationary heater exhaust pipe unhindered.
  - the exhaust gas does not come into contact with flammable materials.

NOTE
Damage to the auxiliary heating due to overheating

If the flow of hot air is blocked, the auxiliary heating may overheat and switch off.

- Do not block the flow of hot air.

NOTE
Battery discharge caused by stationary heater or stationary ventilation operation

Operating the stationary heater or stationary ventilation drains the battery.

- After heating or ventilating the vehicle twice, drive for a longer period of time.

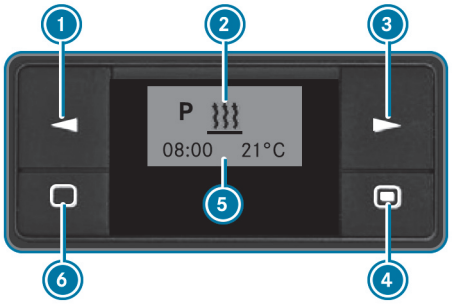

You can set three departure times with the switch clock. Following malfunctions or if the battery has been disconnected, you will need to re-set the departure times.

Selecting a program memory

- Press button 1 or 3 until P flashes on menu bar 2.
- Press button 4.
  The numbers of the program memories are shown on status bar 5. The tick denotes activated program memories.
- Use button 1 or 3 to select the desired program memory.
- Press button 4.

ACTIVATING/DEACTIVATING PROGRAM MEMORIES

- Use button 1 or 3 to select On or Off.
- Press button 4.

EDITING PROGRAM MEMORIES

- Use button 1 or 3 to select .

- Press button ④.
- Set the day of the week and the time (→ page 337).

SETTING THE TEMPERATURE AND OPERATING DURATION (AUXILIARY WARM-AIR HEATER)

DANGER
Risk of fatal injury due to poisonous exhaust gases

If the tailpipe is blocked or sufficient ventilation is not possible, poisonous exhaust gases such as carbon monoxide may enter the vehicle. This is the case in enclosed spaces or if the vehicle gets stuck in snow, for example.

- Always switch the stationary heater off in enclosed spaces without an air extraction system, e.g. in garages.
- Keep the tailpipe and the area around the vehicle free from snow when the engine or the stationary heater is running.
- Open a window on the side of the vehicle facing away from the wind to ensure an adequate supply of fresh air.

WARNING
Risk of fire due to hot stationary heater components and exhaust gases

Flammable materials such as leaves, grass or twigs may ignite.

- When the stationary heater is switched on, make sure that:
  - hot vehicle parts do not come into contact with flammable materials.
  - the exhaust gas can flow out of the stationary heater exhaust pipe unhindered.
  - the exhaust gas does not come into contact with flammable materials.

NOTE
Damage to the auxiliary heating due to overheating

If the flow of hot air is blocked, the auxiliary heating may overheat and switch off.

- Do not block the flow of hot air.

NOTE
Battery discharge caused by stationary heater or stationary ventilation operation

Operating the stationary heater or stationary ventilation drains the battery.

- After heating or ventilating the vehicle twice, drive for a longer period of time.

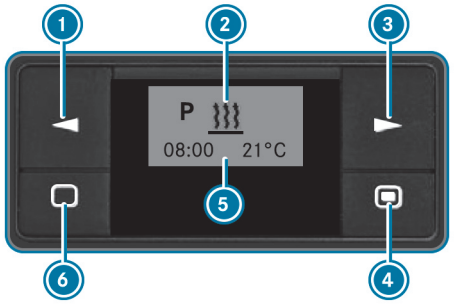

- Press button 4.
- Set the temperature with button 1 or 3.
- Press button 4.
- Set the operating duration with button 1 or 3 or select the ∞ symbol for continuous operation.
- Press button 4.

> ⓘ The operating duration set is the default setting for immediate heating mode. You can set the operating duration within a range of 10 to 120 minutes or to continuous operation.

RECTIFYING PROBLEMS WITH THE AUXILIARY WARM-AIR HEATER

THE MESSAGE ERROR APPEARS ON THE SWITCH CLOCK'S DISPLAY.

POSSIBLE CAUSE:

- A malfunction has occurred.
- Have the auxiliary heating checked at a qualified specialist workshop.

THE MESSAGE INIT APPEARS ON THE SWITCH CLOCK'S DISPLAY.

POSSIBLE CAUSE:

- The power supply has been interrupted. All saved settings have been deleted.

  Automatic hardware detection is currently active.
- When automatic hardware detection is complete, set the day of the week, time and operating duration (→ page 337).
- Set the departure time (→ page 340).

AUXILIARY HEATING AUTOMATICALLY SWITCHES OFF AND/OR CANNOT BE SWITCHED ON.

POSSIBLE CAUSE:

- The undervoltage protection system integrated in the control unit is switching auxiliary heating off as the on-board electrical system voltage is below 10 V.
- Have the alternator and the battery checked.

POSSIBLE CAUSE:

- The electrical fuse has blown.
- Replace the electrical fuse; see "Fuse assignment" supplement.
- Have the cause of the faulty fuse investigated at a qualified specialist workshop.

THE AUXILIARY WARM-AIR HEATER HAS OVERHEATED

POSSIBLE CAUSE:

- The air ducts are clogged.

► Ensure that the flow of hot air is not blocked.

► Have the auxiliary heating checked at a qualified specialist workshop.

Operating air vents

Adjusting the air vents

WARNING
Risk of burns or frostbite due to being too close to the air vents

Very hot or very cold air can flow from the air vents.

- Make sure that all vehicle occupants always maintain a sufficient distance from the air vents.
- If necessary, direct the airflow to another area of the vehicle interior.

ADJUSTING THE CENTRE AIR VENTS

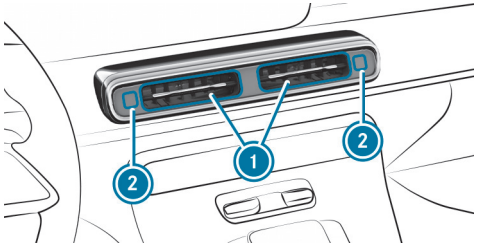

- **To open/close:** press button (2).
- **To set the airflow direction:** hold centre of air vent (1) and move it up and down or to the left or right.

ADJUSTING THE SIDE AIR VENTS:

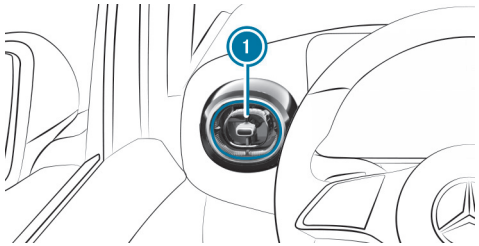

- **To open/close:** hold centre of air vent (1) and turn it to the left or right as far as it will go.
- **To set the airflow direction:** hold centre of air vent (1) and move it up or down or to the left or right.

ADJUSTING THE REAR AIR VENTS:

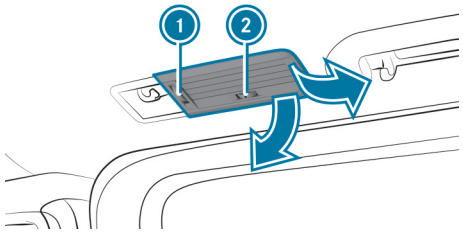

(1) Adjustment wheel for vertically adjusting and regulating airflow
(2) Adjustment wheel for horizontally adjusting airflow

The air vents can be adjusted only on vehicles with rear-compartment air conditioning.

- **To open:** turn adjustment wheel (1) of the rear air vent to the centre position.
- **To close:** turn adjustment wheel (1) up or down as far as it will go.

Driving and parking

This interactive PDF works like a website – tap or click a button to jump straight to where you want to go.
You can return here at any time via the navigation bar at the top left.

Driving
Automatic transmission
All-wheel drive
AIRMATIC
Refuelling
Parking
Driving and driving safety systems
Trailer operation

Driving

Switching on the power supply or the vehicle

WARNING
Accident– and risk of injury with unsupervised children in the vehicle

IF YOU LEAVE CHILDREN UNATTENDED IN THE VEHICLE, THEY CAN IN PARTICULAR

- Open doors and thereby endanger other persons or road users.
- get out of the car and are hit by traffic.
- Operate vehicle equipment and become trapped, forexample.

IN ADDITION, THE CHILDREN COULD ALSO SET THE VEHICLE IN MOTION, FOR EXAMPLEBY:

- releasing the parking brake.
- change the gearbox setting.
- start the vehicle.

► Never leave children unattended in the vehicle.

► When leaving the vehicle, always take the SmartKey with you and lock the vehicle.

► Keep the key out of reach of children.

WARNING
Risk of accident and injury due to animals left unsecured or unattended in the vehicle

If you leave animals in the vehicle unattended or unsecured, they could press buttons or switches, for instance.

AN ANIMAL MAY:

- activate vehicle equipment and become trapped, for example
- switch systems on or off and endanger other road users

Unsecured animals may be thrown about the vehicle in the event of an accident, or sudden steering and braking manoeuvres, and injure vehicle occupants.

► Never leave animals unattended in the vehicle.

► Always correctly secure animals while driving, e.g. using a suitable animal carrier.

Requirements

- The key is in the vehicle and is recognised.
- the brake pedal is not depressed

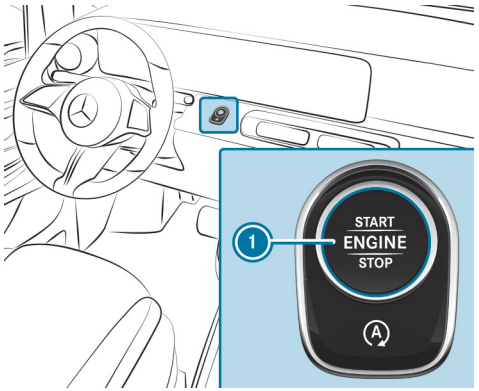

► **To switch on the power supply:** press button (1) once.

You can, for example, activate the windscreen wipers.

THE POWER SUPPLY WILL BE SWITCHED OFF AGAIN IF THE FOLLOWING CONDITIONS ARE MET:

- you open the driver's door
- you press button (1) twice more

► **To switch on the vehicle:** press button (1) twice.

The indicator and warning lamps will light up on the driver display.

THE VEHICLE WILL BE SWITCHED OFF AGAIN IF ANY OF THE FOLLOWING CONDITIONS IS MET:

- You do not start the vehicle within 15 minutes and the transmission is in position P or the electric parking brake is applied.
- You press button (1) again.

Starting the engine

STARTING THE VEHICLE WITH THE START/STOP BUTTON

⚠ **WARNING**
Accident- and risk of injury with unsupervised children in the vehicle

IF YOU LEAVE CHILDREN UNATTENDED IN THE VEHICLE, THEY CAN IN PARTICULAR

- Open doors and thereby endanger other persons or road users.
- get out of the car and are hit by traffic.
- Operate vehicle equipment and become trapped, forexample.

IN ADDITION, THE CHILDREN COULD ALSO SET THE VEHICLE IN MOTION, FOR EXAMPLEBY:

- releasing the parking brake.
- change the gearbox setting.
- start the vehicle.

► Never leave children unattended in the vehicle.

► When leaving the vehicle, always take the SmartKey with you and lock the vehicle.

► Keep the key out of reach of children.

WARNING
Risk of accident and injury due to animals left unsecured or unattended in the vehicle

If you leave animals in the vehicle unattended or unsecured, they could press buttons or switches, for instance.

AN ANIMAL MAY:

- activate vehicle equipment and become trapped, for example
- switch systems on or off and endanger other road users

Unsecured animals may be thrown about the vehicle in the event of an accident, or sudden steering and braking manoeuvres, and injure vehicle occupants.

▶ Never leave animals unattended in the vehicle.

▶ Always correctly secure animals while driving, e.g. using a suitable animal carrier.

DANGER
Danger to life from toxic exhaust gas in enclosed spaces

Combustion engines emit toxic exhaust gases suchas carbon monoxide. Inhaling these exhaust gases is hazardous to health and leads to poisoning.

▶ Never leave the engine or, if present, the stationary heater running in an enclosed space without sufficient ventilation.

WARNING
Risk of fire due to flammable materials in the engine compartment or on the exhaust system

Flammable materials may ignite.

▶ Therefore, regularly check that there are no flammable foreign materials in the engine compartment or on the exhaust system.

Requirements

- The key is in the vehicle and is recognised.
- The transmission is in position P or N.

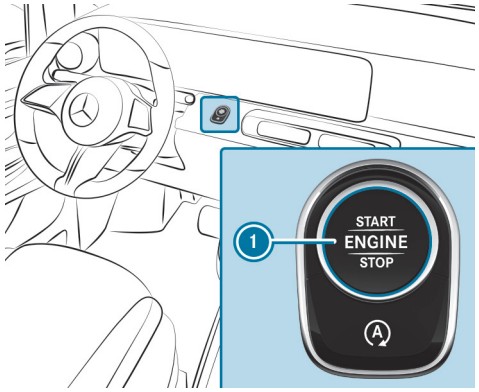

▶ Depress the brake pedal.

▶ Press the button 1 once.

▶ If the vehicle does not start: switch off any unnecessary consumers and press the button 1 again.

- If the vehicle still does not start and the Place the key in the marked space See Owner's Manual display message appears on the driver display: start the vehicle with the key in the storage compartment (emergency operation mode) (→ page 351).

ⓘ You can switch off the vehicle while driving. This is achieved by pressing and holding the button ① for about three seconds or pressing the button ① three times within three seconds. Ensure that you refer to the safety notes under "Driving tips" in this regard (→ page 353).

Observe any information regarding display messages that may be shown on the driver display.

If the key is too close to the mat for wireless charging of your mobile phone or other electronic devices, an error may occur when you start the vehicle. You can rectify the error as follows:

- Exit the vehicle.
- Lock the vehicle.
- Unlock the vehicle.
- Start the vehicle again.

STARTING THE VEHICLE WITH THE KEY IN THE MARKED SPACE (EMERGENCY OPERATION MODE)

⚠ **WARNING**
Accident- and risk of injury with unsupervised children in the vehicle

IF YOU LEAVE CHILDREN UNATTENDED IN THE VEHICLE, THEY CAN IN PARTICULAR

- Open doors and thereby endanger other persons or road users.
- get out of the car and are hit by traffic.
- Operate vehicle equipment and become trapped, forexample.

IN ADDITION, THE CHILDREN COULD ALSO SET THE VEHICLE IN MOTION, FOR EXAMPLEBY:

- releasing the parking brake.
- change the gearbox setting.
- start the vehicle.

- Never leave children unattended in the vehicle.
- When leaving the vehicle, always take the SmartKey with you and lock the vehicle.
- Keep the key out of reach of children.

DANGER
Danger to life from toxic exhaust gas in enclosed spaces

Combustion engines emit toxic exhaust gases suchas carbon monoxide. Inhaling these exhaust gases is hazardous to health and leads to poisoning.

- Never leave the engine or, if present, the stationary heater running in an enclosed space without sufficient ventilation.

WARNING
Risk of fire due to flammable materials in the engine compartment or on the exhaust system

Flammable materials may ignite.

- Therefore, regularly check that there are no flammable foreign materials in the engine compartment or on the exhaust system.

If the vehicle does not start and the Place the key in the marked space See Owner's Manual message appears on the driver display, you can start the vehicle in emergency mode.

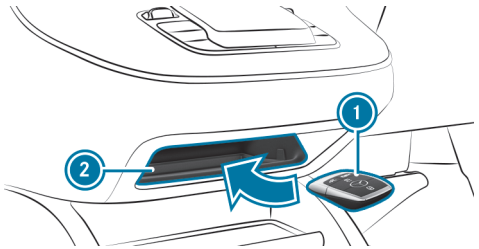

Centre console without stowage compartment

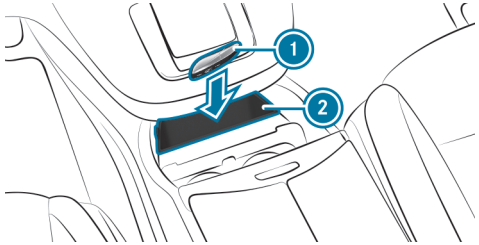

Centre console with stowage compartment

- Ensure that the marked space (2) is empty.
- Remove the key (1) from your key ring.
- Place the key (1) in the marked space (2).
  The vehicle will start after a short time.
  If you remove the key from the marked space, it will still be possible to drive the vehicle. For any further engine starts to be carried out, however, the key must be located in the marked space throughout the journey.
- Have the key (1) checked at a qualified specialist workshop.

IF THE VEHICLE DOES NOT START:

- Place the key (1) in the marked space and leave it there.
- Depress the brake pedal.
- Start the vehicle with the start/stop button (→ page 349).

ⓘ You can switch on the power supply or the vehicle with the start/stop button.

Note any information on the display messages that may be shown on the driver display.

Driving-in instructions

PROTECT THE ENGINE DURING THE FIRST 1500 KM BY:

- driving at varying road and engine speeds.
- shifting to the next higher gear at the very latest when the needle reaches the last third before the red area in the rev counter.
- avoiding stress on the vehicle such as driving at full throttle.
- not shifting down to a lower gear to brake the vehicle.
- gradually increasing the engine speed and accelerating the vehicle up to full speed after 1500 km.
- not depressing the accelerator pedal past the pressure point (kickdown).

This also applies if the engine or parts of the drivetrain have been replaced.

ALSO OBSERVE THE FOLLOWING RUNNING-IN NOTES:

- After the vehicle has been delivered or after repairs, the sensor system of some driving systems and driving safety systems adjusts itself automatically after the vehicle has been driven a certain distance. Full system effectiveness is not reached until the end of this teach-in process.
- New or replaced brake pads, brake discs and tyres only provide optimal braking and grip after several hundred kilometres. Until then, compensate for the reduced braking effect by pressing the brake pedal with greater force.

Driving tips

NOTES ON DRIVING

WARNING
Risk of accident due to objects in the driver's footwell

Objects in the driver's footwell may restrict the pedal travel or block a depressed pedal.

This jeopardises the operating- and road safety of the vehicle.

- ► Safely stow all objects in the vehicle so that they cannot enter the driver's footwell.
- ► Always ensure sufficient clearance for the pedals.
- ► Ensure that floor mats and carpets are securely attached.
- ► Do not place several floor mats or carpets on top of one another.

WARNING
Risk of accident due to incorrect footwear

INCORRECT FOOTWEAR INCLUDES, FOR EXAMPLE:

- shoes with platform soles
- shoes with high heels
- slippers

There is a risk of an accident.

► Always wear suitable footwear so that you can operate the pedals safely.

WARNING
Risk of accident if the vehicle is switched off while driving

If you switch off the vehicle while driving, safety functions are restricted or no longer available.

This may affect the power steering system and the brake force boosting, for example.

You will need to use considerably more force to steer and brake, for example.

► Do not switch off the vehicle while driving.

DANGER
Danger to life from toxic exhaust gas in enclosed spaces

Combustion engines emit toxic exhaust gases suchas carbon monoxide. Inhaling these exhaust gases is hazardous to health and leads to poisoning.

► Never leave the engine or, if present, the stationary heater running in an enclosed space without sufficient ventilation.

WARNING
Risk of skidding and of an accident due to shifting down on slippery road surfaces

If you shift down on slippery road surfaces to increase the engine braking effect, the drive wheels may lose traction.

► Do not shift down on slippery road surfaces to increase the engine braking effect.

DANGER
Risk of fatal injury from toxic exhaust gases if the tailpipe is blocked

Combustion engines emit toxic exhaust gases such as carbon monoxide. Inhaling these exhaust gases is harmful to health and leads to poisoning. If the tailpipe is blocked or sufficient ventilation is not possible, exhaust gases can enter the vehicle. This is the case, for example, if the vehicle gets stuck in the snow.

- When the engine or stationary heater is running, keep the tailpipe and the area around the vehicle free of snow.
- To ensure a sufficient supply of fresh air, open a window on the side of the vehicle facing away from the wind.

NOTE
Damage to the drivetrain and engine when pulling away

- Do not warm up the engine while the vehicle is stationary. Pull away immediately.
- Avoid high engine speeds and driving at full throttle until the engine has reached its operating temperature.

NOTES ON DRIVING WITH A ROOF LOAD, TRAILER OR FULLY LADEN VEHICLE

NOTE
Vehicle damage due to failure to observe the maximum permissible clearance height

If the vehicle height exceeds the maximum permissible clearance height, the roof and other vehicle parts may be damaged.

- Please observe the indicated maximum clearance height.
- If the vehicle exceeds the permissible clearance height, do not drive in.
- Take the modified vehicle height in the case of roof superstructures or other carrier systems into account.

Driving with a loaded roof luggage rack or trailer, with the vehicle fully laden or with a full complement of occupants changes the handling and steering characteristics of your vehicle.

PLEASE OBSERVE THE FOLLOWING NOTES:

- Do not exceed the permissible roof load (⟶ page 761) and trailer load (⟶ page 759). Also observe the information in the technical data.
- Ensure even distribution of the roof load and vehicle load, with heavy items at the bottom. Also observe the notes on loading the vehicle (⟶ page 619).
- Drive carefully, avoiding sudden acceleration, braking and steering action and cornering at speed.
- If trailer operation is permitted, observe the notes on trailer operation (⟶ page 461).

Please bear in mind that all the speeds indicated in these Operating Instructions are approximate and are subject to a certain tolerance.

NOTES ON SHORT-DISTANCE TRIPS

If the vehicle is predominantly used for short-distance trips, a fault in the automatic cleaning function of the diesel particulate filter can occur. Due to this, fuel may also accumulate in the engine oil and cause engine failure.

During automatic cleaning, extremely hot exhaust gases escape from the tailpipe. Maintain a distance of at least 1 m to other objects, e.g. parked vehicles, in order to avoid causing damage.

If you mainly drive short distances, you should drive on a motorway or go for a country drive for 20 minutes every500 km. This facilitates the regeneration of the diesel particulate filter.

Observe any information regarding display messages that may be shown on the driver display.

INFORMATION ABOUT TRANSPORT BY RAIL

Transporting your vehicle by rail may be subject to certain restrictions or require special measures to be taken in some countries due to varying tunnel heights and loading standards.

You can obtain information about this from a Mercedes-Benz Service Centre.

INFORMATION ON BRAKING

WARNING
Risk of accident due to the brake system overheating

If you leave your foot on the brake pedal when driving, the brake system may overheat.

This increases the braking distance and the brake system can even fail.

- Never use the brake pedal as a footrest.
- Do not depress the brake pedal and the accelerator pedal at the same time while driving.

NOTE
Causing wear to the brake linings by permanently depressing the brake pedal

- Do not permanently depress the brake pedal while driving.
- To use braking effect of the engine, shift to a lower gear in good time.

DOWNHILL GRADIENTS

On long and steep downhill gradients, you can reduce the load on the brakes by shifting to a lower gear in good time(→ page 369). This is particularly important when driving a heavily-laden vehicle. This way you will make use of the engine's braking effect, thus preventing the brakes from overheating and wearing too quickly.

HEAVY AND LIGHT LOADS
If the brakes have been subjected to heavy use, do not park the vehicle immediately. Keep driving for a short while. The brakes cool down more quickly in the airstream.

If you only make moderate use of the brakes, you should occasionally test their effectiveness. To do this, brake more firmly from a higher speed while paying attention to the traffic conditions. The brakes will grip better as a result.

WET CARRIAGEWAY
If you have been driving for a long time in heavy rain without braking, there may be a delayed response when you first apply the brakes. This may also occur after driving through a car wash or deep water. In such cases you will need to depress the brake pedal more firmly. Maintain a greater distance from the vehicle in front.

While paying attention to the traffic conditions, you should brake the vehicle firmly after driving on a wet carriageway or through a car wash. This heats the brake discs so that they dry more quickly, thus protecting them against corrosion.

IMPAIRED BRAKING EFFECT ON ROADS TREATED WITH DE-ICING SALT:

- A layer of salt on the brake discs or brake linings can increase braking distances considerably, or braking may only be one-sided.
- Maintain an especially large safety distance from the vehicle in front.

TO REMOVE THE LAYER OF SALT:

- Apply the brakes from time to time, paying attention to traffic conditions.
- Depress the brake pedal gently at the end of a journey and when starting a new journey.

INFORMATION ABOUT DRIVING ON WET ROADS

NOTES ON AQUAPLANING
Aquaplaning can take place once a certain amount of water has accumulated on the road surface.

OBSERVE THE FOLLOWING NOTES DURING HEAVY PRECIPITATION OR IN CONDITIONS IN WHICH AQUAPLANING MAY OCCUR:

- Reduce your speed.
- Avoid tyre ruts.
- Avoid sudden steering movements
- Brake carefully.

Also observe the notes on regularly inspecting wheels and tyres (→ page 40).

NOTES ON DRIVING THROUGH WATER ON ROADS
Water ingress can damage the engine, electrics and transmission.

Water can also enter the air intake of the engine and cause engine damage.

OBSERVE THE FOLLOWING IF YOU MUST DRIVE THROUGH WATER:

- The water, when calm, may only reach the lower edge of the vehicle body.
- Drive at walking pace at most; water can otherwise enter the vehicle interior or engine compartment.
- Vehicles travelling in front, or oncoming vehicles, can create waves which may exceed the maximum permissible height of the water.

The braking effect of the brakes is reduced after fording. Brake carefully while paying attention to the traffic conditions until braking power has been fully restored.

NOTES ON DRIVING IN MOUNTAINOUS AREAS

Vehicles with a diesel engine: the operating safety of the diesel engine is guaranteed up to an altitude of 2500 m above sea level. You may exceed this altitude for a short time, e. g. when driving over a mountain pass. Do not drive continuously at altitudes above 2500 m. Otherwise you may damage the diesel engine. Depending on the vehicle equipment, the operating safety of the diesel engine may also be unimpaired up to a height of 4000 m above sea level. You can obtain information on this matter at a qualified specialist workshop.

When driving in the mountains, note that engine output – and thus start-off gradeability – will decrease with increasing altitude. The ECO start/stop function is no longer available when driving at heights of more than 2500 m above sea level. Observe the notes on braking on downhill gradients (⟶ page 356).

The maximum permissible trailer loads are valid for journeys at heights of up to 1000 m above sea level with gradients up to 12% (⟶ page 759).

ECO start/stop function

HOW THE ECO START/STOP FUNCTION OPERATES

IF ALL VEHICLE CONDITIONS FOR AN AUTOMATIC ENGINE STOP ARE MET, THE ENGINE WILL BE SWITCHED OFF AUTOMATICALLY:

- You brake the vehicle to a standstill in transmission position D or N.
- **Vehicles with 48 V on-board electrical systems:** you depress the brake pedal when travelling at a low speed.

IF THE SYSTEM HAS DETECTED ONE OF THE FOLLOWING SITUATIONS, THE ENGINE WILL NOT BE SWITCHED OFF BY THE INTELLIGENT STOP INHIBITOR:

- You stop at a stop sign and there is no vehicle in front of you.
- The vehicle that stopped in front of you is moving off again.
- You manoeuvre, turn the steering wheel sharply or engage reverse gear.

> ⓘ If you activate the HOLD function or engage park position P, the engine can be switched off in spite of an intelligent stop inhibitor.

THE ENGINE WILL RESTART AUTOMATICALLY IN THE FOLLOWING CASES:

- You release the brake pedal in transmission position D when the HOLD function is not active.
- You engage transmission position D or R.
- You depress the accelerator pedal.
- The vehicle requires an automatic engine start.
- **Vehicles with a 48 V on-board electrical system:** the vehicle rolls on a downhill gradient and does not automatically enter gliding mode at 20 km/h.

ECO START/STOP FUNCTION SYMBOLS ON THE DRIVER DISPLAY:

- The symbol Ⓐ (green) appears when the vehicle is at a standstill: the engine was switched off by the ECO start/stop function.
- The symbol Ⓐ (yellow) appears when the vehicle is at a standstill: not all vehicle conditions for an engine stop have been met.
- Neither the symbol Ⓐ nor Ⓐ appears when the vehicle is at a standstill: you have not depressed the brake pedal far enough.
- The symbol Ⓐ OFF appears: the ECO start/stop function is deactivated or there is a malfunction.

If the engine was switched off by the ECO start/stop function and you leave the vehicle, a warning tone will sound and the engine will not be restarted. The

Vehicle is operational Switch off vehicle before exiting display message will also appear on the driver display.

If you do not switch off the vehicle, it will automatically be switched off after one minute.

SWITCHING THE ECO START/STOP FUNCTION ON/OFF

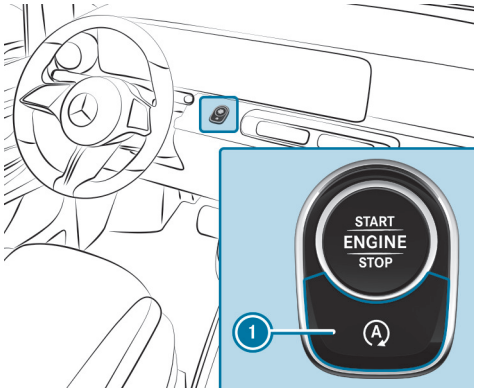

► Press button 1.

An indicator will appear on the driver's display when you switch the ECO start/stop function on/off.

ⓘ [A OFF] will be shown permanently on the driver display while the ECO start/stop function is deactivated.

Function of the ECO display

The ECO display summarises your driving characteristics from the start of a journey to its completion and assists you in adopting an economical driving style to maximise range. If you interrupt your journey and switch off the vehicle for longer than four hours, the ECO display values will automatically be reset.

YOU CAN INFLUENCE CONSUMPTION IF YOU:

- Anticipate road and traffic conditions.
- Drive in drive program [E] if it is available; otherwise, in drive program [C] (→ page 369).
- Follow the gearshift recommendations when changing gear manually (→ page 369).

ⓘ Depending on the engine, your vehicle will have one of the following ECO displays.

VEHICLES WITH A 12 V ON-BOARD ELECTRICAL SYSTEM

THE ECO DISPLAY ASSESSES THE FOLLOWING CRITERIA FOR AN ECONOMICAL DRIVING STYLE:

- Coasting at the right times
- Consistent speed
- Moderate acceleration

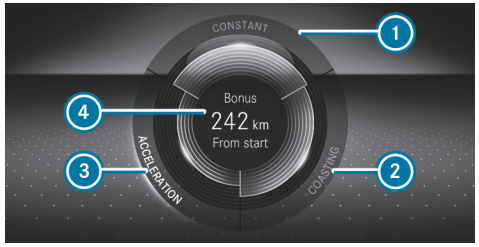

THE LETTERING IN THE SEGMENT WILL LIGHT UP BRIGHTLY, THE OUTER EDGE WILL LIGHT UP AND THE SEGMENT WILL FILL UP WHEN THE FOLLOWING DRIVING STYLE IS ADOPTED:

- (1) Steady speed
- (2) Gentle deceleration and rolling
- (3) Moderate acceleration

THE LETTERING IN THE SEGMENT WILL BE GREY, THE OUTER EDGE WILL BE DARK AND THE SEGMENT WILL EMPTY WHEN THE FOLLOWING DRIVING STYLE IS ADOPTED:

- (1) Fluctuating speed
- (2) Heavy braking
- (3) Sporty acceleration

THE ECO DISPLAY WILL SHOW YOU WHEN YOU HAVE DRIVEN ECONOMICALLY:

- The three segments are completely filled simultaneously.
- The edges of all three segments light up.

The additional range achieved as a result of your driving style in comparison with a driver with a very sporty driving style will be shown in the centre of the display (4). The range displayed does not indicate a fixed reduction in consumption.

VEHICLES WITH 48 V ON-BOARD ELECTRICAL SYSTEM

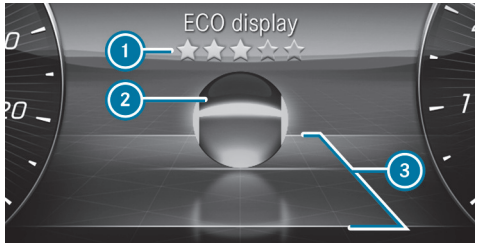

The ECO display shows an evaluation of your driving style on the driver display depending on the situation. This enables you to check the efficiency of your driving style and adjust it if necessary. The ECO display menu shows a ball (2) that will roll forwards or backwards in the direction of travel on a stylised road according to the driving characteristics.

Above and below the road, lines mark the area for an efficient driving style (3). Ball (2) will light up in green if it is rolling within these lines. Outside the lines, the ball will light up in orange.

THE ECO DISPLAY ASSESSES THE FOLLOWING CRITERIA FOR AN ECONOMICAL DRIVING STYLE:

- Coasting at the right times
- Consistent speed
- Moderate acceleration

The overall assessment of your driving style "from start" is indicated using stars (1). It starts with five empty stars, which you can fill one after the other if you drive efficiently. When all five stars are filled, a glow will appear in the background.

You can call up the ECO display function via the Classic menu (→ page 481).

Automatic transmission

DIRECT SELECT lever

FUNCTION OF THE DIRECT SELECT LEVER

WARNING
Accident– and risk of injury with unsupervised children in the vehicle

IF YOU LEAVE CHILDREN UNATTENDED IN THE VEHICLE, THEY CAN IN PARTICULAR

- Open doors and thereby endanger other persons or road users.
- get out of the car and are hit by traffic.
- Operate vehicle equipment and become trapped, forexample.

IN ADDITION, THE CHILDREN COULD ALSO SET THE VEHICLE IN MOTION, FOR EXAMPLEBY:

- releasing the parking brake.
- change the gearbox setting.
- start the vehicle.

► Never leave children unattended in the vehicle.

► When leaving the vehicle, always take the SmartKey with you and lock the vehicle.

► Keep the key out of reach of children.

WARNING
Risk of accident due to incorrect gearshifting

If the engine speed is higher than the idle speed and you engage the transmission position D or R, the vehicle may accelerate sharply.

► If you engage the transmission position D or R when the vehicle is at a standstill, always depress the brake pedal firmly and do not accelerate at the same time.

WARNING
Risk of accident and injury when the transmission position is not engaged

The current transmission position will be highlighted on the driver's display.

If the selected transmission position is not highlighted, the vehicle may pull away in the wrong direction or roll away.

- After changing the transmission position, always check the transmission position display on the driver's display.

If the transmission position is not highlighted on the driver's display even after a short time:

- Pay attention to the display messages.
- Pull away carefully and check the engaged transmission position.
- When parking, engage the parking brake and secure the vehicle against rolling away.
- Have the transmission checked immediately at a qualified specialist workshop.

NOTE
Transmission damage due to shifting at high engine speed or when the vehicle is rolling

You can damage the automatic transmission if you shift from D to R, from R to D or directly to P when the engine speed is too high or the vehicle is rolling.

- Only change the transmission position when the vehicle is stationary.

You can use the DIRECT SELECT lever to switch the transmission position. The current transmission position will appear highlighted on the driver display (→ page 476).

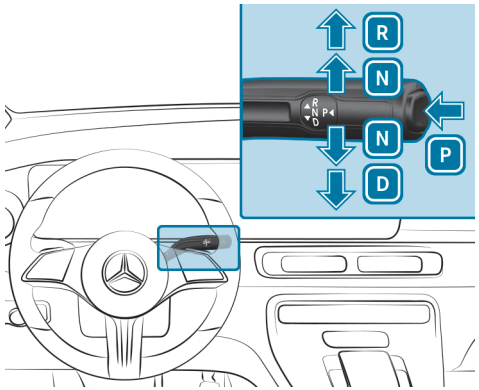

P Park position
R Reverse gear
N Neutral
D Drive position

ENGAGING REVERSE GEAR R

WARNING
Risk of accident due to incorrect gearshifting

If the engine speed is higher than the idle speed and you engage the transmission position D or R, the vehicle may accelerate sharply.

- If you engage the transmission position D or R when the vehicle is at a standstill, always depress the brake pedal firmly and do not accelerate at the same time.

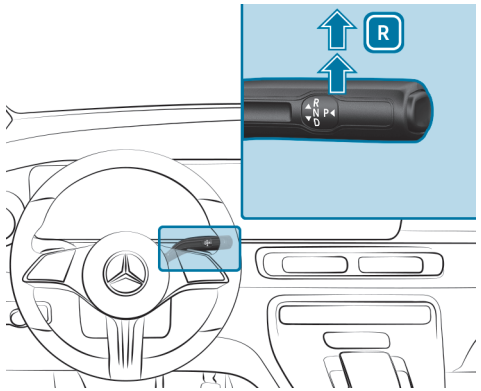

- Depress the brake pedal and push the DIRECT SELECT lever upwards past the first point of resistance.

SELECTING NEUTRAL N

WARNING
Risk of accident due to incorrect gearshifting

If the engine speed is higher than the idle speed and you engage the transmission position D or R, the vehicle may accelerate sharply.

- If you engage the transmission position D or R when the vehicle is at a standstill, always depress the brake pedal firmly and do not accelerate at the same time.

WARNING
Risk of accident and injury when neutral position is engaged

If you park the vehicle with the transmission in neutral position N and the parking brake is not engaged, the vehicle may roll away.

There is a risk of accident and injury!

- Before parking the vehicle, apply the parking brake.

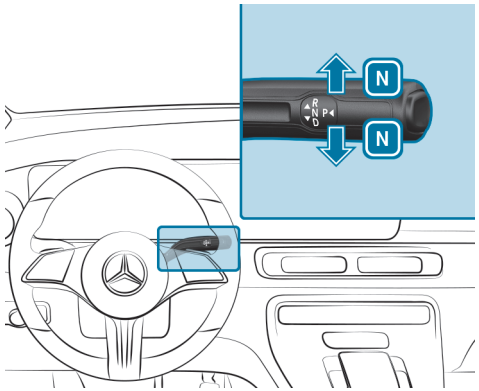

- Press the brake pedal and the DIRECT SELECT lever upwards or downwards to the first point of resistance.

Subsequently releasing the brake pedal will allow you to move the vehicle freely, e.g. to push it or tow it away.

IF THE TRANSMISSION IS ALSO TO STAY IN NEUTRAL N WHEN THE VEHICLE IS SWITCHED OFF, PROCEED AS FOLLOWS:

- Start the vehicle.
- Depress the brake pedal and engage neutral N.
- Release the brake pedal.
- Switch off the vehicle.

ⓘ If you then exit the vehicle leaving the key in the vehicle, the transmission will remain in neutral N.

ENGAGING PARK POSITION P

⚠ **WARNING**
Accident– and risk of injury with unsupervised children in the vehicle

IF YOU LEAVE CHILDREN UNATTENDED IN THE VEHICLE, THEY CAN IN PARTICULAR

- Open doors and thereby endanger other persons or road users.
- get out of the car and are hit by traffic.
- Operate vehicle equipment and become trapped, forexample.

IN ADDITION, THE CHILDREN COULD ALSO SET THE VEHICLE IN MOTION, FOR EXAMPLEBY:

- releasing the parking brake.
- change the gearbox setting.
- start the vehicle.

- Never leave children unattended in the vehicle.
- When leaving the vehicle, always take the SmartKey with you and lock the vehicle.
- Keep the key out of reach of children.

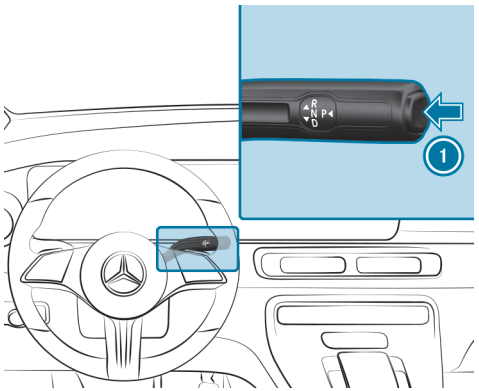

NOTE
Damage due to engaging park position P while the vehicle is rolling

If you shift the transmission into park position P while the vehicle is rolling, the transmission may be damaged.

- If the vehicle is rolling, do not open a door.
- Only engage the park position P when the vehicle is stationary.

- Observe the notes on parking the vehicle (→ page 382).
- Depress the brake pedal until the vehicle is stationary.
- When the vehicle is stationary, press button 1.

  When the P transmission position indicator is shown, park position is engaged. If the P transmission position indicator does not appear, secure the vehicle to prevent it from rolling away.

Depending on the situation, it may take a short time until transmission position P is engaged. Therefore, always pay attention to the transmission position indicator.

PARK POSITION P WILL BE ENGAGED AUTOMATICALLY WHEN ONE OF THE FOLLOWING CONDITIONS IS MET:

- You switch the stationary vehicle off in transmission position D or R.
- With the vehicle stationary, you open the driver's door with the transmission in transmission position D or R.
- When the vehicle is rolling, you switch if off in transmission position D or R and bring it to a standstill.
- With the vehicle stationary, you leave the driver's seat while the HOLD function or Distance Assist DISTRONIC is active.
- With the vehicle stationary, you undo the seat belt buckle of the driver's seat while the HOLD function or Distance Assist DISTRONIC is active.
- When the vehicle is rolling, you shift to transmission position N, bring the vehicle to a standstill and open the driver's door when the vehicle is stationary.
- Engaging park position P automatically is required by the vehicle.

To manoeuvre with an open driver's door, open the driver's door while the vehicle is stationary and engage transmission position D or R again.

SELECTING DRIVE POSITION D

> ⚠ **WARNING**
> Risk of accident due to incorrect gearshifting
>
> If the engine speed is higher than the idle speed and you engage the transmission position D or R, the vehicle may accelerate sharply.
>
> ► If you engage the transmission position D or R when the vehicle is at a standstill, always depress the brake pedal firmly and do not accelerate at the same time.

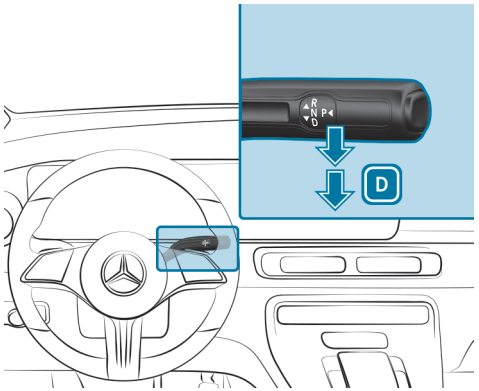

► Depress the brake pedal and push the DIRECT SELECT lever downwards past the first point of resistance.

WHEN THE AUTOMATIC TRANSMISSION IS IN TRANSMISSION POSITION D, IT WILL SHIFT GEARS AUTOMATICALLY. THIS DEPENDS ON THE FOLLOWING FACTORS:

- The drive program selected (→ page 368)
- **Vehicles with diesel engine:** limitation of shift range in all drive programs except (→ page 367)
- Position of the accelerator pedal
- Vehicle speed

Limiting the shift range (vehicles with diesel engine)

Requirements

- Transmission position D is engaged (→ page 367).
- Drive program C or S is selected (→ page 369).

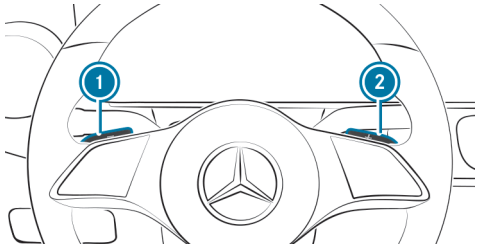

► **To restrict the shift range:** briefly pull steering wheel gearshift paddle 1.

The automatic transmission will shift to the next gear down, depending on the gear currently engaged. The shift range will also be restricted.

The selected shift range will be shown on the driver display. The automatic transmission will shift only as far as the selected gear.

► Pull and hold steering wheel gearshift paddle 1.

The automatic transmission will change to a shift range that allows easy acceleration and deceleration. To do this, the automatic transmission will shift down one or more gears and restrict the shift range.

The selected shift range will be shown on the driver display. The automatic transmission will shift only as far as the selected gear.

ⓘ The automatic transmission will not shift down if you pull steering wheel gearshift paddle ① whilst travelling at too high a speed.
If the maximum engine speed for the restricted shift range is reached and you continue to depress the accelerator pedal, the automatic transmission will shift up automatically. This will prevent the engine from overrevving.

► **To de-restrict the shift range:** briefly pull steering wheel gearshift paddle ②.

The automatic transmission will shift to the next gear up, depending on the gear currently engaged. This will de-restrict the shift range at the same time.

The selected shift range will be shown on the driver display. The automatic transmission will shift only as far as the selected gear.

► **To de-restrict the shift range:** pull and hold steering wheel gearshift paddle ②.

or

► Engage transmission position D again (⟶ page 367).

The automatic transmission will shift up one or more gears depending on the gear currently engaged. At the same time, shift range restriction will be cancelled and transmission position D will be displayed again.

RECOMMENDED SHIFT RANGES FOR THE FOLLOWING DRIVING CONDITIONS:

3 Use the engine's braking effect.

2 Use the engine's braking effect on downhill gradients and when driving on steep roads and in mountainous areas as well as in arduous conditions.

1 Use the engine's braking effect on extremely steep downhill gradients and on long downhill stretches.

Drive programs

FUNCTION OF DYNAMIC SELECT

ⓘ The vehicle has different drive programs depending on the equipment.

DYNAMIC SELECT allows a drive program to be selected quickly according to the current driving conditions or the desired vehicle characteristics.

The drive program selected will appear on the driver display next to the transmission position indicator. After you start the vehicle, the automatic transmission will switch automatically to drive program C.

You can choose between the following drive programs.

M MANUAL (ONLY VEHICLES WITH DIESEL ENGINE)

- Permanent manual gearshifting

ⓘ In vehicles with a petrol engine, you can activate drive program M via the multimedia system(⟶ page 371).

S SPORT

- Stable but sporty handling
- May lead to higher fuel consumption

C COMFORT

- Comfortable and economical driving
- Balance between traction and stability
- Improved driving stability, e.g. on slippery road surfaces

E ECO (ONLY VEHICLES WITH PETROL ENGINE)

- Particularly economical driving
- Availability of glide mode

SELECTING A DRIVE PROGRAM

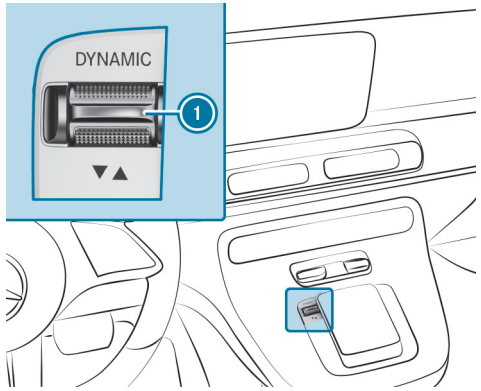

► Push DYNAMIC SELECT switch (1) forwards or backwards.

The drive program selected will appear on the driver display.

Manual shifting

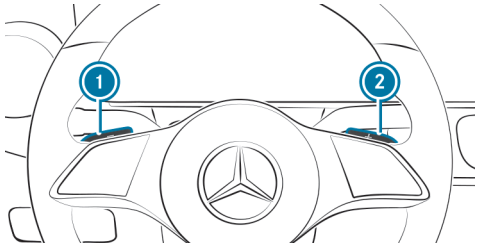

You can change gear manually with the steering wheel gearshift paddles when the automatic transmission is in position D. If permissible, the automatic transmission will shift to a higher or lower gear depending on the steering wheel gearshift paddle that has been pulled.

TO SHIFT THE AUTOMATIC TRANSMISSION MANUALLY, YOU HAVE THE FOLLOWING OPTIONS:

- **Vehicles with petrol engine:** temporary setting in all drive programs except M
- **Vehicles with diesel engine:** limitation of shift range in all drive programs except M (→ page 367)
- Permanent setting in drive program M

Temporary setting (vehicles with petrol engine)

► **To activate:** pull steering wheel gearshift paddle (1) or (2).

Manual shifting will be activated for a short time.

The driver display will indicate the transmission position and the current gear, e.g. M1.

- **To deactivate:** pull and hold steering wheel gearshift paddle ②.
  The driver display will indicate transmission position D.

Permanent setting:

- **Vehicles with petrol engine:** activate drive program M in the multimedia system (→ page 371).
- **Vehicles with diesel engine:** select drive program M (→ page 369).
  The driver display will indicate the transmission position and the current gear, e.g. M1.

ⓘ Manual shifting will be deactivated automatically when you switch from drive program M to another drive program.

GEARSHIFTING

NOTE
Damage to the engine due to late upshifting

In manual mode, the automatic transmission does not shift up even when the engine limiting speed is reached.

To prevent the engine from overrevving, the fuel supply will be cut.

- Upshifting before the engine speed reaches the red area on the rev counter.

Note the gearshift recommendation on the driver display.

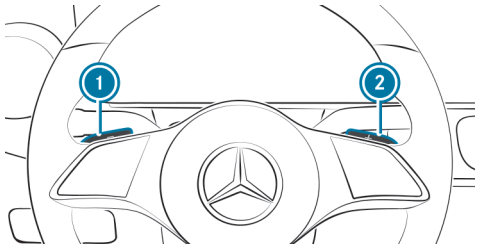

- **To shift up:** pull steering wheel gearshift paddle ②.
- **To shift down:** pull steering wheel gearshift paddle ①.
  If you pull and hold steering wheel gearshift paddle ①, the transmission will shift to the lowest possible gear.

ⓘ When the vehicle is coasting, the automatic transmission will shift down automatically.

GEARSHIFT RECOMMENDATION

The gearshift recommendation assists you in adopting an economical driving style.

- If gearshift recommendation ① appears next to the transmission position display, shift to the recommended gear.

Activating/deactivating manual shifting permanently

Multimedia system:

▶ Activate or deactivate manual shifting permanently.

Using kickdown

▶ **For maximum acceleration:** depress the accelerator pedal beyond the point of resistance.

Function of glide mode (vehicles with petrol engine)

Glide mode helps you to reduce fuel consumption when you employ an anticipatory driving style.

GLIDE MODE IS CHARACTERISED BY THE FOLLOWING:

- The combustion engine is switched off depending on the driving situation. All the vehicle functions will remain active.
- The transmission position display D is shown in green.

GLIDE MODE WILL BE ACTIVATED IF THE FOLLOWING CONDITIONS ARE MET:

- Drive program E is selected.
- The speed is within a suitable range.
- The road's course is suitable, e.g.no steep inclines or tight bends.
- The state of charge of the battery is sufficient.
- You do not depress the accelerator or brake pedal.

Glide mode will be deactivated again if one of the conditions is no longer met.

Vehicles with Active Distance Assist DISTRONIC: when Active Distance Assist DISTRONIC is active, the glide mode function is not available.

GLIDE MODE CAN ALSO BE PREVENTED BY THE FOLLOWING PARAMETERS:

- Incline
- Downhill gradient
- Temperature
- Height
- Speed
- Operating condition of the engine
- Traffic situation

All-wheel drive

Notes on the 4MATIC

4MATIC ensures permanent drive for all four wheels and, together with ESP®, it improves the vehicle's traction.

> ⓘ In wintry road conditions, the maximum effect of 4MATIC can be achieved only if you use winter tyres (M+S tyres), with snow chains if necessary.

Use DSR (Downhill Speed Regulation) when driving downhill off road (⟶ page 419).

If you fail to adapt your driving style, 4MATIC can neither reduce the risk of an accident nor override the laws of physics. 4MATIC cannot take account of road, weather and traffic conditions. 4MATIC is only an aid. You are responsible especially for maintaining a safe distance from the vehicle in front, for vehicle speed, for braking in good time and for staying in lane.

AIRMATIC

Function of AIRMATIC

AIRMATIC is an air suspension system with an all-round level control system that ensures the best possible springing and consistent ground clearance, even when the vehicle is laden. When being driven at speed, the vehicle is lowered automatically to improve driving safety and to reduce fuel consumption. There is also an option to raise the vehicle level while driving slowly, e.g. for driving off public roads. The AIRMATIC settings are dependent on the selected drive program.

AIRMATIC CONSISTS OF THE FOLLOWING FUNCTIONS AND COMPONENTS:

- air suspension with all-round level control
- speed-dependent lowering to reduce fuel consumption
- higher vehicle level selectable via the multimedia system for greater ground clearance when driving slowly
- DYNAMIC SELECT switch

VEHICLE LEVELS PER DRIVE PROGRAM

DRIVE PROGRAMS C, E AND M:

- The vehicle is set to normal level.
- At speeds above approx. 110 km/h the vehicle is lowered.
- At speeds below approx. 75 km/h the vehicle is raised again.

DRIVE PROGRAM S:

- The vehicle is set to low level.
- At higher speeds, the vehicle level does not lower any further.

ⓘ Creaking noises may occasionally occur if the vehicle level is changed by switching the drive program while the vehicle is stationary. To avoid noises, we recommend changing the drive program while driving.

ⓘ **Operation with a trailer or bicycle rack:** if the electrical connection has been correctly established, the vehicle remains at the normal level regardless of speed.

SYSTEM LIMITS

If the overheating protection has been activated due to frequent changes of level within a short period of time, AIRMATIC will not function or its availability will be limited. The message Compressor is cooling is then shown in the driver display.

After the cooling phase, AIRMATIC is again available without restrictions.

Adjusting the vehicle level

WARNING
Risk of accident because vehicle level is too high

Driving characteristics may be impaired.

The vehicle can drift outwards, for example, when steering or cornering.

► Choose a vehicle level which is suited to the driving style and the road surface conditions.

WARNING
Risk of becoming trapped due to the vehicle lowering

When lowering the vehicle, persons may become trapped if body parts are between the vehicle body and the tyres or underneath the vehicle.

► Make sure nobody is underneath the vehicle or in the immediate vicinity of the wheel arches when you lower the vehicle.

WARNING
Risk of becoming trapped due to the vehicle lowering

Vehicles with AIRMATIC or level control: when you unload luggage or leave the vehicle, the vehicle first rises slightly and then returns to the set level shortly afterwards.

You or anyone else in the vicinity of the wheel arches or the underbody could thus become trapped.

The vehicle can also be lowered after being locked.

► When leaving the vehicle, make sure that nobody is in the vicinity of the wheel arches or the underbody.

NOTE
Damage due to vehicle lowering

Parts of the body could be damaged when the vehicle is lowered.

► Make sure that there are no obstacles such as kerbs underneath or in the immediate vicinity of the body when the vehicle is being lowered.

Requirements

- The vehicle has been started.
- The vehicle is not moving faster than 30 km/h.
- Trailer socket (trailer/rear bicycle rack) is not connected.

Multimedia system:

RAISING THE VEHICLE

- Select .
  The driver display shows rising.
  The vehicle is raised to high level +1.
  The indicator lamp for vehicle level lights up.

Your selection is saved. The set high level +1 is saved after the vehicle is switched off.

THE VEHICLE IS LOWERED AGAIN IN THE FOLLOWING SITUATIONS:

- As soon as you exceed a speed of 30 km/h.

LOWERING THE VEHICLE

- Select .
  The driver display shows lowering.
  The vehicle is set to the level of the active drive program.
  The indicator lamp for vehicle level does not light up.

Refuelling

Refuelling the vehicle

WARNING
Risk of fire or explosion from fuel

Fuels are highly flammable.

- Fire, naked flames, smoking and creating sparks must be avoided.
- Before refuelling, switch off the vehicle and, if fitted, the stationary heater and keep switched off during filling.

WARNING
Risk of injury from fuels

Fuels are poisonous and hazardous to your health.

- Do not swallow fuel or let it come into contact with skin, eyes or clothing.
- Do not inhale fuel vapour.
- Keep children away from fuel.
- Keep doors and windows closed during the refuelling process.

If you or other people come into contact with fuel, observe the following:

- Immediately rinse fuel off your skin with soap and water.
- If fuel comes into contact with your eyes, immediately rinse them thoroughly with clean water. Seek medical attention immediately.
- If you swallow fuel, seek medical attention immediately. Do not induce vomiting.
- Change immediately out of clothing that has come into contact with fuel.

WARNING
Risk of fire and explosion due to electrostatic charge

Electrostatic charge can ignite fuel vapour.

- Before you open the fuel filler cap or take hold of the pump nozzle, touch the metallic vehicle body.
- To avoid creating another electrostatic charge, do not get into the vehicle again during the refuelling process.

WARNING
Risk of fire from fuel mixture

Vehicles with a diesel engine:

If you mix diesel fuel with petrol, the flash point of the fuel mixture is lower than that of pure diesel fuel.

While the vehicle is running, component parts in the exhaust system may overheat without warning.

- Never refuel using petrol.
- Never mix petrol with diesel fuel.

NOTE
Do not use diesel to refuel vehicles with a petrol engine

IF YOU HAVE ACCIDENTALLY REFUELLED WITH THE WRONG FUEL:

- Do not switch on the vehicle. Otherwise fuel can enter the engine.
  Even small amounts of the wrong fuel could result in damage to the fuel system and the engine. The repair costs are high.

- Consult a qualified specialist workshop.
- Have the fuel tank and fuel lines drained completely.

NOTE
Do not refuel diesel-engined vehicles with petrol

IF YOU HAVE ACCIDENTALLY REFUELLED WITH THE WRONG FUEL:

- Do not switch on the vehicle. Otherwise fuel can enter the engine.
  Even small amounts of the wrong fuel could result in damage to the fuel system and the engine. The repair costs are high.

- Consult a qualified specialist workshop.
- Have the fuel tank and fuel lines drained completely.

NOTE
Damage to the fuel system caused by overfilled fuel tanks

- Only fill the fuel tank until the pump nozzle switches off.

Requirements:

- The vehicle is unlocked and switched off.
- The auxiliary heating is switched off.
- The front left-hand door is open.

ⓘ Do not get back into the vehicle during the refuelling process. You might build up an electrostatic charge again.

Observe the notes on operating fluids (→ page 744).

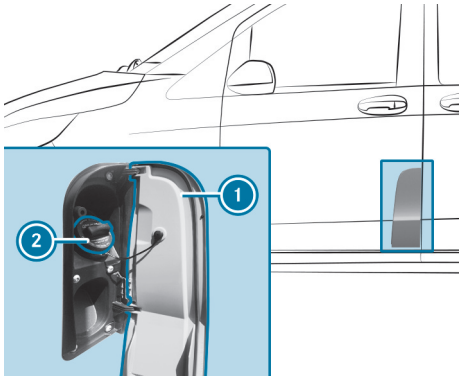

- ▶ Open fuel filler flap ①.
- ▶ Turn fuel filler cap ② anti-clockwise and remove it.
- ▶ Close all vehicle doors to prevent fuel vapours from entering the vehicle interior.
- ▶ Slide the filler neck of the pump nozzle fully into the tank, hook in place and refuel.
- ▶ Fill the fuel tank only until the pump nozzle switches off.
- ▶ Replace the fuel filler cap ② and turn it clockwise.
  You will hear a click when the fuel filler cap is closed fully.
- ▶ Open the front left-hand door.
- ▶ Close the fuel filler flap ①.

ⓘ **Vehicles with a diesel engine and incorrect fuelling protector against refuelling with petrol:** the filler neck is designed for refuelling at diesel filling pumps for passenger vehicles.

ⓘ **Vehicles with a diesel engine without an incorrect fuelling protector:** refuelling preferred at diesel filling pumps for passenger vehicles. However, you can also refuel at a diesel filling pump for trucks.

ⓘ If the fuel tank has been run completely dry, top up with at least 5 l of fuel. Switch on the vehicle three to four times before starting the vehicle.

AdBlue®

NOTES ON ADBLUE®

AdBlue® is a water-soluble fluid for the exhaust gas aftertreatment of diesel engines. In order for the exhaust gas aftertreatment to function properly, only use AdBlue® in accordance with ISO 22241.

ADBLUE® HAS THE FOLLOWING PROPERTIES:

- non-toxic
- colourless and odourless
- non-flammable

If you open the AdBlue® tank, small amounts of ammonia vapour may be released. Fill the AdBlue® tank only in well-ventilated areas.

Do not let AdBlue® come into contact with skin, eyes or clothes. Keep AdBlue® away from children.

Do not ingest AdBlue®. If AdBlue® is swallowed, immediately rinse your mouth out thoroughly. Drink plenty of water. Seek medical attention at once.

Observe the notes on the service fluid AdBlue® (⟶ page 750).

ADBLUE® AVAILABILITY:

- AdBlue® can be topped up at a qualified specialist workshop, e.g. a Mercedes-Benz Service Centre.
- AdBlue® is available at numerous filling stations from AdBlue® filling pumps.
- Alternatively, AdBlue® is available at qualified specialist workshops, e.g. a Mercedes-Benz Service Centre, and at numerous filling stations as an AdBlue® refill canister or AdBlue® refill bottle.

ⓘ When using refill containers, ensure a non-drip connection to the vehicle filler neck.

CALLING UP THE ADBLUE® RANGE AND ADBLUE® FILL LEVEL DISPLAY

Driver display:

Service ▶▶ AdBlue

AdBlue® freezes at a temperature of approximately -11 °C. The vehicle is equipped with an AdBlue® preheating system ex factory. This means that winter operation is also ensured for temperatures below -11 °C. If you top up AdBlue® at temperatures below -11 °C, the AdBlue® fill level in the driver display may not be displayed correctly. If the AdBlue® is frozen, drive for at least 20 minutes and then park the vehicle for a minimum of 30 seconds, so that the fill level is correctly displayed. In extreme winter conditions, the time needed to detect the amount topped up may be considerably longer. Park the vehicle in a warm garage to speed up this process.

▶ Call up the menu.

The driver display will show the AdBlue® fill level.

TOPPING UP ADBLUE®

NOTE

Engine damage due to AdBlue® being in the fuel

▶ AdBlue® must not be used to fill the fuel tank.

▶ Only use AdBlue® to fill the AdBlue® tank.

▶ Do not overfill the AdBlue® tank.

NOTE
Contamination of the vehicle interior due to AdBlue® leakage

- After topping up, carefully close the AdBlue® refill container.
- Avoid carrying AdBlue® refill containers permanently in the vehicle.

NOTE
Overfilling the AdBlue® tank due to the vehicle standing at an angle

The AdBlue® tank can only be filled as intended when the vehicle is parked on a level surface. This way, variations in the filling amount are avoided.

When filling the reservoir when the vehicle is standing at an angle, there is a risk of overfilling. This may damage exhaust gas aftertreatment components.

- Park the vehicle on a level surface to fill the AdBlue® tank.

Requirements:

- The auxiliary heating is switched off.
- The vehicle is switched off.
- The left front door is open.

THE FOLLOWING MESSAGES THAT APPEAR IN SUCCESSION ON THE DRIVER DISPLAY INDICATE THAT YOU NEED TO REFILL THE ADBLUE® CONTAINER:

- Refill AdBlue See Owner's Manual

  The AdBlue® container level has dropped to the reserve level.
- Top up AdBlue Emergency op. in XXX km See Owner's Manual

  The low AdBlue® level will result in limited performance once the remaining distance displayed has been driven. Top up AdBlue® as soon as possible.
- Top up AdBlue Perf. reduced: XXX km/h No start in XXX km

  The vehicle speed is restricted to the speed displayed. You will only be able to drive the vehicle for the distance shown. Subsequently, it will no longer be possible to start the vehicle.
- Refill AdBlue Engine start not possible

  The vehicle can no longer be started.

TOP-UP QUANTITY:

With a prompt on the driver display	min. 8 l
Without a prompt on the driver display	min. 2 l

You can also have the AdBlue® fill level and the AdBlue® range displayed (→ page 379).

OPENING THE ADBLUE® FUEL FILLER CAP

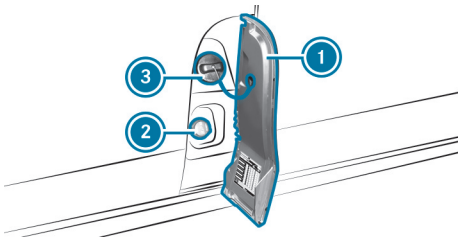

- Open fuel filler flap (1).
- Close all vehicle doors to prevent ammonia vapours from entering the vehicle interior.
- Turn blue AdBlue® fuel filler cap (2) anti-clockwise and remove it.
  Fuel filler cap (3) for the fuel remains closed.

REFUELLING WITH A REFILL CANISTER

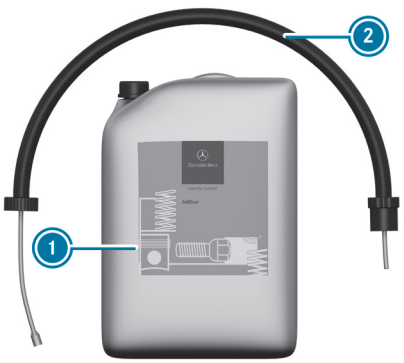

Example

- Unscrew the cap on AdBlue® refill canister (1).
- Screw disposable hose (2) onto the opening of AdBlue® refill canister (1) until finger tight.
- Screw disposable hose (2) onto the filler neck of the vehicle until hand-tight.
- Lift up and tip AdBlue® refill canister (1).
  The filling process stops when the AdBlue® container is completely full.
  AdBlue® refill canister (1) can be removed when it has been only partially emptied.

> ⓘ Avoid carrying AdBlue® refill containers permanently in the vehicle.

- First unscrew disposable hose (2) from the vehicle's filler neck, then from AdBlue® refill canister (1).

CLOSING THE ADBLUE® FUEL FILLER CAP

- After filling the AdBlue® container, place the AdBlue® fuel filler cap on the filler neck and tighten it by turning it clockwise.
- Turn the AdBlue® fuel filler cap until the lettering is horizontal and can be read.
  The filler neck is only locked correctly when this is the case.
- Open the front left-hand door first, and then close the fuel filler flap.
- Switch on the vehicle.
  The message in the driver display Refill AdBlue See Owner's Manual must go out after approximately 20 seconds. If the message continues to be displayed, you must add more AdBlue®.

Parking

Parking the vehicle

WARNING
Risk of accident and injury caused by an insufficiently secured vehicle rolling away

If the vehicle is not securely parked sufficiently, it can roll away in an uncontrolled way even at a slight downhill gradient.

- ► On uphill or downhill gradients, turn the front wheels so that the vehicle rolls towards the kerb if it starts moving.
- ► apply the parking brake.
- ► Switch the transmission to position P.

WARNING
Risk of fire caused by hot exhaust system parts

Flammable materials such as leaves, grass or twigs may ignite.

- ► Park the vehicle so that no flammable material can come into contact with hot vehicle components.
- ► In particular, do not park on dry grassland or harvested grain fields.

WARNING
Accident– and risk of injury with unsupervised children in the vehicle

IF YOU LEAVE CHILDREN UNATTENDED IN THE VEHICLE, THEY CAN IN PARTICULAR

- Open doors and thereby endanger other persons or road users.
- get out of the car and are hit by traffic.
- Operate vehicle equipment and become trapped, forexample.

IN ADDITION, THE CHILDREN COULD ALSO SET THE VEHICLE IN MOTION, FOR EXAMPLEBY:

- releasing the parking brake.
- change the gearbox setting.
- start the vehicle.

- ► Never leave children unattended in the vehicle.
- ► When leaving the vehicle, always take the SmartKey with you and lock the vehicle.
- ► Keep the key out of reach of children.

WARNING
Risk of accident and injury due to animals left unsecured or unattended in the vehicle

If you leave animals in the vehicle unattended or unsecured, they could press buttons or switches, for instance.

AN ANIMAL MAY:

- activate vehicle equipment and become trapped, for example
- switch systems on or off and endanger other road users

Unsecured animals may be thrown about the vehicle in the event of an accident, or sudden steering and braking manoeuvres, and injure vehicle occupants.

► Never leave animals unattended in the vehicle.

► Always correctly secure animals while driving, e.g. using a suitable animal carrier.

NOTE
Damage to the vehicle or the drivetrain due to rolling away

► Always park your vehicle safely and according to legal requirements.

► Always properly secure the vehicle against rolling away.

NOTE
Transmission damage due to rollers in neutral position

If the vehicle is switched off and rolling in neutral position (e.g. when towing), this can damage the drivetrain and lead to transmission damage.

► Only allow the vehicle to roll in neutral position for a short time.

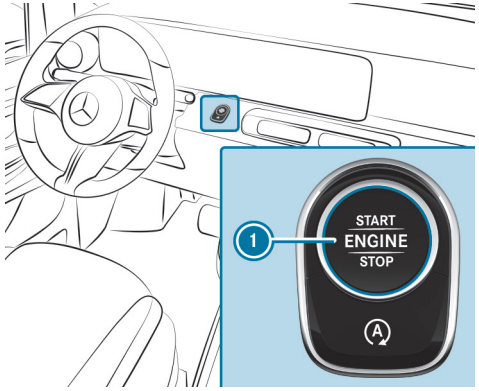

► Bring the vehicle to a standstill by applying the brake pedal.

► On inclines, turn the front wheels so that the vehicle will roll towards the kerb if it starts moving.

► Apply the parking brake.

► Engage transmission position P when the vehicle is stationary with the brake pedal depressed.

► Switch off the vehicle by pressing button 1.

- Release the service brake slowly.

ⓘ When you park the vehicle, you can still operate the side windows for approximately five minutes if the driver's door is closed.

- Get out of the vehicle and lock it.
- On uphill or downhill gradients, also secure the vehicle's rear wheels with chocks or an object without any sharp edges.

Automatic vehicle shut-off upon locking

Your vehicle is equipped with automatic engine shut-off.

IF THE ENGINE WAS SWITCHED OFF BY THE ECO START/STOP FUNCTION OR YOU LEAVE THE STARTED VEHICLE, THE VEHICLE WILL BE TURNED OFF WHEN LOCKED UNDER THE FOLLOWING CONDITIONS:

- Transmission position P is engaged.
- The driver's door is closed.
- The vehicle is locked using the vehicle key.

ⓘ The engine will continue to run if the vehicle is not locked as described after you have left it. In this case, switch off the vehicle manually.

Electric parking brake

INFORMATION ON THE ELECTRIC PARKING BRAKE

⚠ **WARNING**
Accident- and risk of injury with unsupervised children in the vehicle

IF YOU LEAVE CHILDREN UNATTENDED IN THE VEHICLE, THEY CAN IN PARTICULAR

- Open doors and thereby endanger other persons or road users.
- get out of the car and are hit by traffic.
- Operate vehicle equipment and become trapped, forexample.

IN ADDITION, THE CHILDREN COULD ALSO SET THE VEHICLE IN MOTION, FOR EXAMPLEBY:

- releasing the parking brake.
- change the gearbox setting.
- start the vehicle.

- Never leave children unattended in the vehicle.
- When leaving the vehicle, always take the SmartKey with you and lock the vehicle.
- Keep the key out of reach of children.

Observe the note on transporting animals in the vehicle (→ page 382).

For the automatic functions to work correctly, the driver must be seated in the correct seat position (→ page 216).

The function of the electric parking brake is dependent on the on-board electrical system voltage. If the on-board electrical system voltage is low or there is a malfunction in the system, the electric parking brake may not be able to be applied. In this case, the yellow (P) indicator lamp in the driver display lights up.

ⓘ Only if the red (P) indicator lamp stays on has the electric parking brake been securely applied.

It may not be possible to release a parking brake if the on-board electrical system voltage is low or if there is a malfunction in the system. Inform a qualified specialist workshop.

When the vehicle is stationary, the electric parking brake carries out a function test at regular intervals. Noises are normal in this process.

The automatic application of the parking brake only works after a previous journey.

FUNCTION OF THE ELECTRIC PARKING BRAKE (AUTOMATIC APPLICATION)

⚠ **WARNING**
Accident– and risk of injury with unsupervised children in the vehicle

IF YOU LEAVE CHILDREN UNATTENDED IN THE VEHICLE, THEY CAN IN PARTICULAR

- Open doors and thereby endanger other persons or road users.
- get out of the car and are hit by traffic.
- Operate vehicle equipment and become trapped, forexample.

IN ADDITION, THE CHILDREN COULD ALSO SET THE VEHICLE IN MOTION, FOR EXAMPLEBY:

- releasing the parking brake.
- change the gearbox setting.
- start the vehicle.

▶ Never leave children unattended in the vehicle.

▶ When leaving the vehicle, always take the SmartKey with you and lock the vehicle.

▶ Keep the key out of reach of children.

IF THE TRANSMISSION IS IN POSITION P AND ONE OF THE FOLLOWING CRITERIA IS MET, THE ELECTRIC PARKING BRAKE IS APPLIED AUTOMATICALLY:

- The vehicle is switched off.
- The driver is not sitting in the driver's seat.

- The seat belt tongue is not inserted into the seat belt buckle of the driver's seat.

ⓘ To prevent automatic application: pull on the handle of the electric parking brake (⟶ page 387).

IN THE FOLLOWING SITUATIONS THE ELECTRIC PARKING BRAKE WILL ALSO BE APPLIED AUTOMATICALLY:

- The HOLD function is keeping the vehicle at a standstill.
- Active Parking Assist is keeping the vehicle at a standstill.
- Active Distance Assist DISTRONIC is bringing the vehicle to a standstill.
- **For this to happen, in addition, at least one of the following conditions must be fulfilled:**
  - The vehicle is switched off.
  - The driver is not sitting in the driver's seat.
  - The seat belt tongue is not inserted into the seat belt buckle of the driver's seat and the driver's door is opened.
  - There is a system malfunction.
  - The power supply is insufficient.
  - The vehicle has been stationary for a longer time.

If the electric parking brake has been applied, the red indicator lamp [Ⓟ] on the driver display lights up. The electric parking brake has only been actually applied when the red [Ⓟ] indicator lamp lights up steadily.

ⓘ If the vehicle is switched off by the ECO start/stop function, the electric parking brake is not automatically applied.

FUNCTION OF THE ELECTRIC PARKING BRAKE (AUTOMATIC RELEASE)

⚠ **WARNING**
Accident– and risk of injury with unsupervised children in the vehicle

IF YOU LEAVE CHILDREN UNATTENDED IN THE VEHICLE, THEY CAN IN PARTICULAR

- Open doors and thereby endanger other persons or road users.
- get out of the car and are hit by traffic.
- Operate vehicle equipment and become trapped, forexample.

IN ADDITION, THE CHILDREN COULD ALSO SET THE VEHICLE IN MOTION, FOR EXAMPLEBY:

- releasing the parking brake.
- change the gearbox setting.
- start the vehicle.

▶ Never leave children unattended in the vehicle.

▶ When leaving the vehicle, always take the SmartKey with you and lock the vehicle.

▶ Keep the key out of reach of children.

THE ELECTRIC PARKING BRAKE OF YOUR VEHICLE IS RELEASED WHEN ALL OF THE FOLLOWING CONDITIONS ARE FULFILLED:

- The driver is sitting in the driver's seat.
- The seat belt tongue of the seat belt is inserted into the driver's seat belt buckle

- The vehicle has been started.
- The transmission is in position D or R and you depress the accelerator or you switch on an even surface from transmission position P to D or R.
- If the transmission is in position R the tailgate must be closed and where appropriate the rear window of the EASY-Pack tailgate must be closed.

When the electric parking brake is applied, the red indicator lamp (P) on the driver display goes out.

APPLYING/RELEASING THE ELECTRIC PARKING BRAKE MANUALLY

WARNING
Accident– and risk of injury with unsupervised children in the vehicle

IF YOU LEAVE CHILDREN UNATTENDED IN THE VEHICLE, THEY CAN IN PARTICULAR

- Open doors and thereby endanger other persons or road users.
- get out of the car and are hit by traffic.
- Operate vehicle equipment and become trapped, forexample.

IN ADDITION, THE CHILDREN COULD ALSO SET THE VEHICLE IN MOTION, FOR EXAMPLEBY:

- releasing the parking brake.
- change the gearbox setting.
- start the vehicle.

▶ Never leave children unattended in the vehicle.

▶ When leaving the vehicle, always take the SmartKey with you and lock the vehicle.

▶ Keep the key out of reach of children.

WARNING
Risk of accident and injury due to animals left unsecured or unattended in the vehicle

If you leave animals in the vehicle unattended or unsecured, they could press buttons or switches, for instance.

AN ANIMAL MAY:

- activate vehicle equipment and become trapped, for example
- switch systems on or off and endanger other road users

Unsecured animals may be thrown about the vehicle in the event of an accident, or sudden steering and braking manoeuvres, and injure vehicle occupants.

- ▶ Never leave animals unattended in the vehicle.
- ▶ Always correctly secure animals while driving, e.g. using a suitable animal carrier.

APPLYING

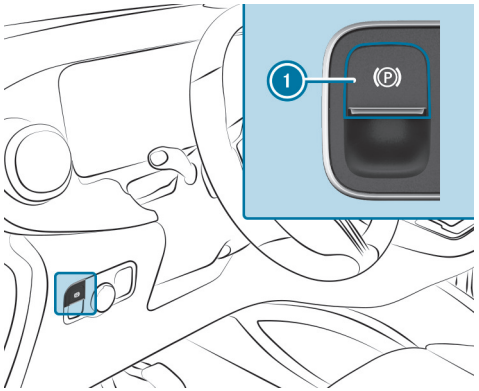

- ▶ Press handle 1.
  When the electric parking brake is applied, the red (P) indicator lamp lights up in the driver display.

It is also possible to apply the electric parking brake when the vehicle is switched off.

ⓘ Only if the red (P) indicator lamp stays on has the electric parking brake been securely applied.

RELEASING

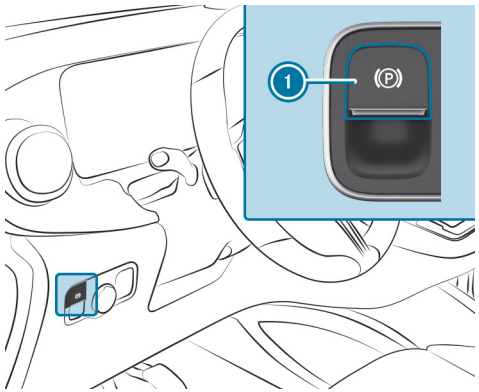

- ▶ Switch on the vehicle.
- ▶ Depress the brake pedal.
- ▶ Pull on handle 1.
  The red (P) indicator lamp in the driver display goes out.

ⓘ If you apply and release the parking brake frequently within a short period, it may not be possible to release the parking brake again in some cases. To protect it from damage, the parking brake is temporarily locked and cannot be released – repeat lock. The parking brake is operational again after approximately 20 seconds.

EMERGENCY BRAKING

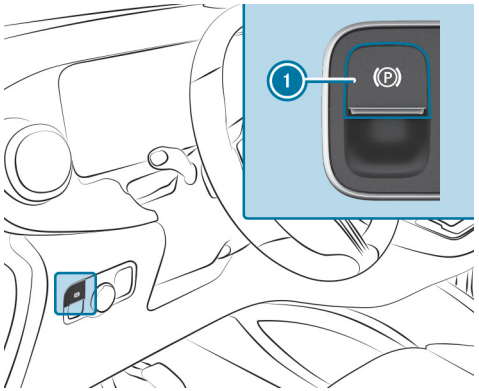

If, in exceptional cases, the service brake should fail, you can use the parking brake to perform emergency braking. The braking distance will then be considerably greater.

► Press and hold handle ①.

The vehicle is braked as long as you keep the electric parking brake handle ① depressed.

The vehicle's brake lights light up.

The longer handle ① for the electric parking brake is depressed, the greater the braking force.

DURING THE BRAKING PROCEDURE, YOU WILL RECEIVE THE FOLLOWING FEEDBACK FROM THE VEHICLE:

- A warning tone will sound.
- The driver display shows the message Release parking brake and the red (P) indicator lamp flashes.

When the vehicle has been braked to a standstill, the electric parking brake is applied and the red (P) indicator lamp lights up.

Temporarily storing the vehicle

PARKING UP THE VEHICLE FOR LONGER THAN FOUR WEEKS

► Charge the 12 V battery via the jump-start connection point, e.g. using a trickle charger (⟶ page 65).

or

► Contact a qualified specialist workshop to disconnect the 12 V battery.

PARKING UP THE VEHICLE FOR LONGER THAN SIX WEEKS

► Contact a qualified specialist workshop and seek advice.

The vehicle can otherwise suffer damage as a result of lack of use.

Standby mode

FUNCTION OF STANDBY MODE

ⓘ This function is not available for all models.

If standby mode is activated, energy loss is minimised during extended non-operational periods.

STANDBY MODE IS CHARACTERISED BY THE FOLLOWING:

- The starter battery is preserved.
- The maximum non-operational time appears in the driver display.
- The connection to online services is interrupted.

IF THE FOLLOWING CONDITIONS ARE MET, STANDBY MODE CAN BE ACTIVATED OR DEACTIVATED VIA THE MULTIMEDIA SYSTEM:

- The vehicle is switched on.
- The vehicle has not been started.

Exceeding the vehicle's displayed non-operational time may cause inconvenience; i.e. it cannot be guaranteed that the starter battery will reliably start the vehicle.

CHARGE THE STARTER BATTERY IN THE FOLLOWING SITUATIONS:

- You want to extend the vehicle's non-operational time.
- The state of charge of the starter battery is not sufficient for standby mode.

ⓘ Standby mode is automatically deactivated when the vehicle is switched on.

SWITCHING STANDBY MODE ON OR OFF (PARKING UP THE VEHICLE)

Requirements

- The vehicle is switched on.
- The vehicle has not been started.

Multimedia system:

→ ⌂ ▸▸ Settings ▸▸ Vehicle ▸▸ Other functions

▸ Activating/deactivating Standby mode.

Driving and driving safety systems

Notes on driving systems and your responsibility

Your vehicle is equipped with driving systems which assist you in driving, parking and manoeuvring the vehicle. The driving systems serve solely as aids. They are not a substitute for you having to pay attention to your surroundings and do not relieve you of your responsibility to adhere to road traffic law. The driver is always responsible for maintaining a safe distance to the vehicle in front, for vehicle speed, braking in good time and for staying in the lane. Pay attention to the traffic conditions at all times and intervene as necessary. Be aware of the limitations regarding safe use of these systems.

Driving systems can neither reduce the risk of an accident if you fail to adapt your driving style, nor override the laws of physics. They cannot always take into account road, weather or traffic conditions.

ⓘ Some driving systems can regulate or limit the speed to a previously set value. Ensure that the new driver is aware of the stored speed when changing drivers.

Information on vehicle sensors and cameras

Some driving systems and driving safety systems use cameras and radar or ultrasonic sensors to monitor the area in front of, behind or next to the vehicle.

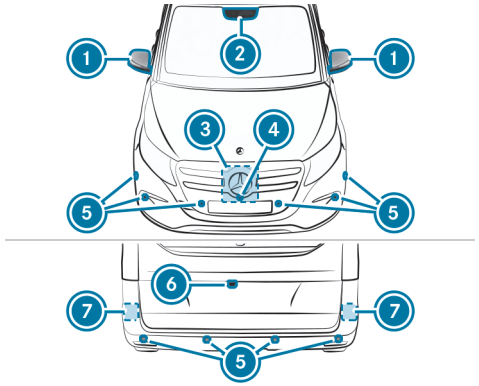

1. Cameras in the outside mirrors
2. Multifunction camera
3. Front radar
4. Front camera
5. Ultrasonic sensors
6. Reversing camera
7. Rear corner radars

WARNING
Risk of accident if the detection capability of the vehicle sensors or cameras is impaired

If the areas of the vehicle sensors or cameras are obscured, damaged or dirty, some driving and driving safety systems may no longer function correctly. There is a risk of an accident.

- Always keep the areas of the vehicle sensors and cameras clear of obstructions and clean.
- Have damage to the bumpers, radiator grille or stone chipping in the area of the cameras in the windscreen repaired at a qualified specialist workshop.

Keep the areas of the cameras and sensors in particular free of dirt, ice and slush (→ page 653). The sensors and cameras must not be covered, and the detection ranges around them must be kept free. Do not attach additional licence plate brackets, advertisements, stickers, car films or stone chip protection foils in the detection range of the sensors and cameras. Make sure that there are no overhanging loads protruding into the detection range.

In the event of damage, or following a severe impact, have the function of the sensors checked at a qualified specialist workshop. Have damage or stone chips in the area of the cameras repaired at a qualified specialist workshop.

The reversing camera may retract and extend automatically for calibration purposes, even if no camera image appears on the display.

Overview of driving systems and driving safety systems

IN THIS SECTION, YOU WILL FIND INFORMATION ABOUT THE FOLLOWING DRIVING SYSTEMS AND DRIVING SAFETY SYSTEMS:

- ABS (**A**nti-lock **B**rake **S**ystem) (→ page 393)
- BAS (**B**rake **A**ssist **S**ystem) (→ page 393)
- ESP® (**E**lectronic **S**tability **P**rogram) (→ page 394)
- ESP® Crosswind Assist (→ page 395)
- ESP® Trailer Stability Assist (→ page 395)
- EBD (**E**lectronic **B**rakeforce **D**istribution) (→ page 396)
- Active Brake Assist (→ page 396)
- HOLD function (→ page 401)
- Hill Start Assist (→ page 402)
- Adaptive brake lights (→ page 403)
- ATTENTION ASSIST (→ page 403)
- Cruise control (→ page 405) and limiter (→ page 406)
- Active Distance Assist DISTRONIC (→ page 409)
- DSR (Downhill Speed Regulation) (→ page 419)
- Speed Limit Assist (country-dependent) (→ page 424)
- Traffic Sign Assist (→ page 428)
- Traffic light view (→ page 433)
- Blind Spot Assist with exit warning (→ page 433)
- Active Lane Keeping Assist (→ page 434)

DRIVING ASSISTANCE PACKAGE

ⓘ The following functions are part of the Driving Assistance Package. Some functions are only available depending on the country. Some functions are also available with restricted functionality without the Driving Assistance Package.

- Active Distance Assist DISTRONIC (→ page 409)
- Active Speed Limit Assist (→ page 416)
- Route-based speed adaptation (→ page 417)
- Active Brake Assist (→ page 396)
- Active Steering Assist (→ page 421)
- Active Emergency Stop Assist (→ page 423)

PARKING PACKAGE

ⓘ The reversing camera is also available without the Parking Package, depending on the country.

ⓘ The availability of individual functions depends on country and equipment.

- Reversing camera (→ page 437)
- 360° camera (→ page 439)
- Parking Assist PARKTRONIC (→ page 445)
- Active Parking Assist (→ page 448)
- Trailer Manoeuvring Assist (→ page 458)

Function of ABS (Anti-lock Braking System)

ABS CONTROLS THE BRAKE PRESSURE IN CRITICAL SITUATIONS:

- During braking, for instance, at maximum full-stop braking or if there is insufficient tyre traction, the wheels are prevented from locking.
- The steerability of the vehicle in terms of physical possibilities is ensured when braking.

If ABS intervenes, you will feel pulsations in the brake pedal. The pulsating brake pedal may be an indication of hazardous road conditions and functions as a reminder to take extra care while driving.

SYSTEM LIMITS

- ABS is active from speeds of approx. 5 km/h.
- ABS may be impaired or may not function if a malfunction has occurred and the yellow ABS warning lamp [ABS] lights up continuously after the vehicle is started.

Function of BAS (Brake Assist System)

⚠ **WARNING**
Risk of an accident caused by a malfunction in BAS (Brake Assist System)

If BAS is malfunctioning, the braking distance in an emergency braking situation is increased.

▶ Depress the brake pedal with full force in emergency braking situations. ABS prevents the wheels from locking.

BAS supports you with additional braking force in an emergency braking situation.

IF YOU DEPRESS THE BRAKE PEDAL QUICKLY, BAS IS ACTIVATED:

- BAS automatically boosts the braking force of the brakes
- BAS can shorten the braking distance
- ABS prevents the wheels from locking

When you release the brake pedal, the brakes function as usual again. BAS is deactivated.

Function of ESP® (Electronic Stability Program)

CHARACTERISTICS WHEN ESP® IS ACTIVATED

ESP® CAN, WITHIN PHYSICAL LIMITS, MONITOR AND IMPROVE DRIVING STABILITY AND TRACTION IN THE FOLLOWING SITUATIONS:

- when driving and pulling away on wet or slippery road surfaces
- when braking

IF THE VEHICLE IS DEVIATING FROM THE DIRECTION DESIRED BY THE DRIVER, ESP® CAN INTERVENE AS FOLLOWS TO STABILISE THE VEHICLE:

- one or more wheels are braked
- the engine output is adapted according to the situation

ⓘ Only use the wheel/tyre combinations approved for your vehicle. Only then will ESP® function properly.

IF THE WARNING LAMP FLASHES, THEN ONE OR MORE WHEELS HAVE REACHED THEIR TRACTION LIMIT:

- adapt your driving style to suit the prevailing road and weather conditions
- do not deactivate ESP® under any circumstances
- only depress the accelerator pedal as far as is necessary when pulling away

If the warning lamp lights up continuously, ESP® is not available due to a malfunction.

OBSERVE THE FOLLOWING INFORMATION:

- Indicator and warning lamps (→ page 833)
- Display messages (→ page 764)

CHARACTERISTICS WHEN ESP® IS DEACTIVATED

⚠ **WARNING**
Risk of skidding if ESP® is deactivated

If you deactivate ESP®, ESP® cannot carry out vehicle stabilisation.

▶ ESP® should only be deactivated in the following situations.

When ESP® is deactivated, the warning lamp lights up continuously.

IF ESP® IS DEACTIVATED, TRACTION CAN BE IMPROVED IN THE FOLLOWING SITUATIONS:

- when using snow chains
- in deep snow
- on sand or gravel

ⓘ Spinning the wheels results in a cutting action, which enhances traction.

OBSERVE THE FOLLOWING POINTS WHEN ESP® IS DEACTIVATED:

- vehicle stabilisation is delayed and is significantly reduced in the lower speed range
- the drive wheels may start to spin
- traction control is still active

ⓘ If ESP® is deactivated, ESP® will still support you during braking.

Function of ESP® Crosswind Assist

ESP® CROSSWIND ASSIST DETECTS SUDDEN GUSTS OF SIDE WIND AND HELPS THE DRIVER TO KEEP THE VEHICLE IN THE LANE:

- ESP® Crosswind Assist is active at vehicle speeds above approx. 80 km/h when driving straight ahead or cornering slightly.
- The vehicle is stabilised by means of individual brake intervention on one side. The driver display shows a message with the traffic sign for a strong crosswind.

ESP® CROSSWIND ASSIST DOES NOT REACT UNDER THE FOLLOWING CONDITIONS:

- The vehicle is subjected to severe jolts and vibrations, e.g. as a result of bumps or potholes.
- The vehicle loses traction, e.g. on snow or ice or when aquaplaning.

Function of ESP® trailer stabilisation

⚠ **WARNING**
Risk of accident in poor road and weather conditions

In poor road and weather conditions, the trailer stabilisation cannot prevent lurching of the vehicle/trailer combination. Trailers with a high centre of gravity may tip over before ESP® detects this.

► Always adapt your driving style to suit the current road and weather conditions.

WHEN YOU ARE DRIVING WITH A TRAILER, ESP® TRAILER STABILISATION CAN STABILISE YOUR VEHICLE IF IT BEGINS TO SWERVE FROM SIDE TO SIDE:

- The ESP® trailer stabilisation is active at speeds above approx. 65 km/h.
- Minor swerving is reduced by a targeted, individual brake application on one side.
- In the event of severe swerving, the drive output is also reduced and all wheels are braked.

THE ESP® TRAILER STABILISATION MAY BE RESTRICTED OR OUT OF OPERATION IN THE FOLLOWING CIRCUMSTANCE:

- The trailer is not correctly connected or is not correctly recognised by the vehicle.

Activating/deactivating ESP® (Electronic Stability Program)

Multimedia system:

Settings ▶▶ Quick-access ▶▶ ESP

ⓘ ESP® can only be activated and deactivated via quick-access if at least one other function is available via quick-access. Otherwise, you can find ESP® in the Assistance menu.

▶ Select ESP.

Information about ESP® appears.

▶ Select On or Off.

If the ESP® OFF warning lamp lights up steadily on the driver display, ESP® is deactivated.

Observe the information on warning lamps and display messages which may appear in the driver display.

Function of EBD (Electronic Brakeforce Distribution)

EBD HAS THE FOLLOWING CHARACTERISTICS:

- monitoring and controlling the braking force on the rear wheels
- improving driving stabilisation when braking, especially on bends

Active Brake Assist

FUNCTION OF ACTIVE BRAKE ASSIST

ACTIVE BRAKE ASSIST COMPRISES THE FOLLOWING FUNCTIONS:

- Distance warning function
- Autonomous braking function with collision warning
- Situation-dependent brake force boosting
- **Vehicles with Driving Assistance Package:** Active Evasive Assist

From a speed of approx. 7 km/h, Active Brake Assist can help you to minimise the risk of a collision with vehicles, cyclists or pedestrians, or mitigate the consequences.

If Active Brake Assist has detected a risk of collision, a warning tone sounds and the warning lamp lights up in the driver display.

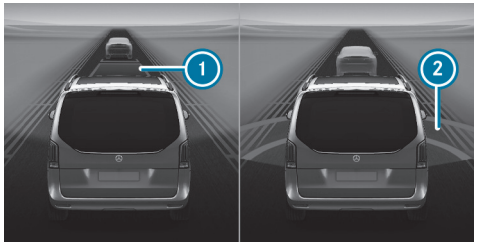

Indicator in the driver display in the Assistance menu

1 Distance insufficient
2 Red radar waves

In the Assistance menu, an insufficient distance from the vehicle in front 1 is indicated in red. If you reduce the distance further, the vehicle ahead is also highlighted in red. If a risk of collision is detected, two red radar waves 2 appear in front of the vehicle.

If you do not react to the collision warning, autonomous braking can be initiated in critical situations. In particularly critical situations, Active Brake Assist can initiate autonomous braking directly. In this case, the warning lamp and warning tone are activated simultaneously with the braking application.

If you apply the brake yourself in a situation detected as critical by Active Brake Assist, or apply the brake during autonomous braking, situation-dependent brake force boosting occurs. The brake pressure increases up to maximum full-stop braking if necessary.

If an autonomous brake application, situation-appropriate brake force boosting or an evasive manoeuvre is performed, pop-up 1 appears on the driver display. It automatically disappears after a short time.

Vehicles with PRE-SAFE®: if the autonomous braking function or the situation-dependent brake force boosting is triggered, additional preventive measures for occupant protection (PRE-SAFE) may also be initiated (→ page 141).

WARNING
Risk of an accident caused by limited detection performance of Active Brake Assist

Active Brake Assist cannot always clearly identify objects and complex traffic situations.

IN SUCH CASES, ACTIVE BRAKE ASSIST MIGHT:

- Give a warning or brake without reason
- Not give a warning or not brake

Active Brake Assist is only an aid. The driver is responsible for maintaining a sufficiently safe distance to the vehicle in front, vehicle speed and for braking in good time.

▶ Always pay careful attention to the traffic situation; do not rely on Active Brake Assist alone.

▶ Be prepared to brake or swerve if necessary.

Observe the system limits of Active Brake Assist. Due to the nature of the system, complex but non-critical driving conditions may also cause Active Brake Assist to intervene during braking.

If Active Brake Assist has been switched off manually or by another driving system, the warning lamp appears in the driver display.

If the system is unavailable owing to soiled or damaged sensors, or a malfunction, the warning lamp appears in the driver display.

Vehicles with Driving Assistance Package: This is also the case if Active Evasive Assist is unavailable or its functions are restricted. In this case the distance warning function and autonomous braking function of Active Brake Assist remain operational.

DISTANCE WARNING FUNCTION

FROM A SPEED OF APPROX. 30 KM/H, THE DISTANCE WARNING FUNCTION GIVES A WARNING IF THE FOLLOWING CONDITIONS ARE MET:

- The difference in speed between the vehicle ahead and yours is a maximum of 30 km/h.
- The distance to the vehicle ahead is insufficient for the current speed.

In this case the warning lamp lights up in the driver display. If the distance to the vehicle ahead is further reduced at higher speeds, the warning lamp starts to flash.

You can set the timing of the distance warning to immediately after detection of the insufficient distance (early) or to when the distance has been insufficient for several seconds (medium, late) (→ page 400).

AUTONOMOUS BRAKING FUNCTION WITH COLLISION WARNING

THE AUTONOMOUS BRAKING FUNCTION MAY INTERVENE AT SPEEDS FROM APPROXIMATELY 7 KM/H IN THE FOLLOWING SITUATIONS:

- at speeds up to approx. 250 km/h for moving vehicles and cyclists ahead or pedestrians walking along the road
- at speeds up to approx. 80 km/h for stationary vehicles
- at speeds up to approx. 70 km/h for crossing vehicles, pedestrians and cyclists
- when making a turn across the oncoming lane, before you leave your own lane, up to approx. 20 km/h if there are vehicles, pedestrians or two-wheelers approaching

> ⓘ The response is limited in the case of stationary pedestrians and cyclists.
> At speeds up to approx. 70 km/h, Active Brake Assist only responds to oncoming vehicles in your own lane with autonomous braking just before a possible collision. This reduces the potential impact speed. It enables you to evade the oncoming vehicle in good time if this is safely possible.

SITUATION-DEPENDENT BRAKE FORCE BOOSTING

THE SITUATION-DEPENDENT BRAKE FORCE BOOSTING MAY INTERVENE AT SPEEDS STARTING FROM APPROXIMATELY 7 KM/H IN THE FOLLOWING SITUATIONS:

- at speeds up to approx. 250 km/h for moving vehicles and cyclists ahead or pedestrians walking along the road
- at speeds up to approx. 80 km/h for stationary vehicles
- at speeds up to approx. 70 km/h for crossing vehicles, pedestrians and cyclists

> ⓘ The response is limited in the case of stationary pedestrians and cyclists.

INTERRUPTION OF A BRAKE APPLICATION BY ACTIVE BRAKE ASSIST

YOU CAN INTERRUPT A BRAKE APPLICATION BY ACTIVE BRAKE ASSIST AT ANY TIME BY:

- noticeably depressing the accelerator pedal or with kickdown
- Fully releasing the brake pedal (only during situation-dependent brake force boosting)
- steering clear of the detected obstacle

If there is no longer a risk of collision or the obstacle ahead is no longer detected, Active Brake Assist automatically cancels the brake application.

TURNING MANOEUVRE FUNCTION

If the system detects a risk of collision with oncoming vehicles, pedestrians or two-wheelers when making a turn across the oncoming lane at speeds below approx. 20 km/h, an autonomous braking intervention may be initiated before you have left your own lane.

ACTIVE EVASIVE ASSIST

⚠ **WARNING**
Risk of accident despite Active Evasive Steering Assist

Active Evasive Steering Assist cannot always clearly identify objects and complex traffic situations.

IN SUCH CASES, ACTIVE EVASIVE STEERING ASSIST MIGHT:

- issue an unfounded warning or initiate a steering intervention
- not issue a warning or not initiate a steering intervention.

The Active Evasive Steering Assist can provide support in preventing a collision via an automatically initiated steering intervention.

► Always pay careful attention to the traffic situation; do not rely on Active Evasive Steering Assist alone.

► Be prepared to brake or swerve if necessary.

► Drive with adjusted speed if pedestrians are in the area surrounding the road.

Active Evasive Assist may react automatically to objects in your lane which are stationary or moving along it.

ACTIVE EVASIVE ASSIST OFFERS THE FOLLOWING FEATURES:

- Detection of pedestrians, cyclists and vehicles
- Support through autonomous steering intervention during a necessary evasive manoeuvre
- Autonomous activation if there is sufficient space within your lane

- Reaction from a speed of approx. 30 km/h up to a speed of approx. 80 km/h

In the event of an intervention by Active Evasive Assist, a warning tone sounds throughout the evasive manoeuvre and the distance warning lamp flashes.

You can end the support from Active Evasive Assist at any time by steering, accelerating or braking.

ACTIVE EVASIVE ASSIST MAY INTERVENE IN THE FOLLOWING SPEED RANGES:

- from a speed of approx. 30 km/h up to a speed of approx. 80 km/h, when approaching stationary vehicles, pedestrians or cyclists
- from a speed of approx. 30 km/h up to a speed of approx. 80 km/h, when approaching pedestrians walking along the road or moving cyclists ahead

SYSTEM LIMITS

Full system performance is not yet available for a few seconds after switching on the vehicle or after moving off. Depending on the surrounding conditions it may take several minutes for the full system performance to be available.

THE SYSTEM MAY BE IMPAIRED OR MAY NOT FUNCTION IN THE FOLLOWING SITUATIONS:

- in snow, rain, fog, heavy spray, glare, direct sunlight or changing light conditions
- if the sensors are soiled, misted up, damaged or covered
- if the sensors are impaired owing to interference from other radar sources, e.g. strong radar reflections in multi-storey car parks
- if a loss of tyre pressure or a defective tyre has been detected and indicated
- if DSR is activated
- in complex traffic situations where objects cannot always be clearly identified
- if pedestrians or vehicles move quickly into the sensor detection range
- if pedestrians are hidden by other objects
- if the typical outline of a pedestrian cannot be distinguished from the background
- if a pedestrian is not detected as such, e.g. owing to special clothing or other objects
- on narrow bends

VEHICLES WITH ACTIVE EVASIVE ASSIST:

- if there is no or poorly visible lane marking
- if the course of the road is far from straight
- if a trailer or bicycle rack is attached

SETTING ACTIVE BRAKE ASSIST

Requirements:

- The vehicle is switched on.

Multimedia system:

→ ⌂ ▸▸ Settings ▸▸ Assistance ▸▸ Collision avoidance ▸▸ Active Brake Assist

THE FOLLOWING SETTINGS ARE AVAILABLE:

- Early
- Medium
- Late
- Off

ⓘ It is recommended that Active Brake Assist always be left activated.

► Select a setting.

The last active setting is selected automatically each time the vehicle is started.

Exception: if the last setting was Off, the Medium setting will be automatically activated the next time the vehicle is started.

DEACTIVATING ACTIVE BRAKE ASSIST

ⓘ It is recommended that Active Brake Assist always be left activated.

► Select Off.
The distance warning function and autonomous braking function can only be switched off when stationary and at speeds up to 10 km/h.

ⓘ If Active Brake Assist is switched off, Emergency Stop Assist and the distance warning function are also deactivated.

When the vehicle is next started, the Medium setting will be activated automatically.

ⓘ If Active Brake Assist is deactivated, the OFF symbol appears on the status bar of the driver display.

HOLD function

HOLD FUNCTION
The HOLD function holds the vehicle at a standstill without you needing to depress the brake pedal, e.g. when pulling away on a slope or when waiting in traffic.

The HOLD function is only an aid. Responsibility for keeping the vehicle safely at a standstill remains with the driver.

SYSTEM LIMITS
The HOLD function is only intended to provide assistance during driving operation and is not an adequate means of securing the stationary vehicle against rolling away.

- The incline cannot be greater than 30%.

ACTIVATING OR DEACTIVATING THE HOLD FUNCTION

⚠ **WARNING**
Risk of an accident due to the HOLD function being active when you leave the vehicle

IF THE VEHICLE IS ONLY BRAKED WITH THE HOLD FUNCTION IT COULD, IN THE FOLLOWING SITUATIONS, ROLL AWAY:

- If there is a malfunction in the system or in the power supply.
- If the HOLD function is deactivated by depressing the accelerator pedal or brake pedal, e.g. by a vehicle occupant.

► Always secure the vehicle against rolling away before you leave it.

Requirements

- The vehicle is stationary.
- The vehicle has been started or has been automatically switched off by the ECO start/stop function.
- All the doors and the tailgate are closed and the driver's seat belt is fastened.
- The parking brake has been released.
- The transmission is in position D, R or N.
- Active Distance Assist DISTRONIC is deactivated.

ACTIVATING THE HOLD FUNCTION

► Depress the brake pedal until HOLD appears in the driver display.

► Release the brake pedal.

ⓘ If depressing the brake pedal the first time does not activate the HOLD function, wait briefly and then try again.

DEACTIVATING THE HOLD FUNCTION

► Depress the accelerator pedal to move off.

or

► Depress the brake pedal until the symbol HOLD in the driver display disappears.

THE HOLD FUNCTION IS DEACTIVATED IN THE FOLLOWING SITUATIONS:

- Active Distance Assist DISTRONIC is activated.
- The transmission is shifted to position P.
- The electric parking brake is engaged.

IN THE FOLLOWING SITUATIONS, THE VEHICLE IS HELD BY TRANSMISSION POSITION P AND/OR BY THE ELECTRIC PARKING BRAKE:

- The driver's seat belt is not fastened, or a door or the tailgate is open.
- The vehicle is switched off without the ECO start/stop function.
- There is a system malfunction.
- The voltage is insufficient.

In addition, the message Brake immediately may appear in the driver display and a horn sound repeatedly.

► Immediately step on the brake firmly until the warning message disappears.
The HOLD function is switched off.

► Additionally secure the vehicle against rolling away.

Information on Hill Start Assist

HILL START ASSIST HOLDS THE VEHICLE FOR A SHORT TIME WHEN PULLING AWAY ON A HILL UNDER THE FOLLOWING CONDITIONS:

- The transmission is in position D or R.
- The parking brake has been released.

This gives you enough time to move your foot from the brake pedal to the accelerator pedal and depress it before the vehicle begins to roll.

WARNING
Risk of accident and injury due to the vehicle rolling away

After a short time, Hill Start Assist no longer holds the vehicle.

► Swiftly move your foot from the brake pedal to the accelerator pedal. Do not leave the vehicle when it is being held by Hill Start Assist.

Function of Adaptive Brake Lights

ADAPTIVE BRAKE LIGHTS WARN FOLLOWING TRAFFIC IN AN EMERGENCY BRAKING SITUATION WITH THE FOLLOWING ACTIONS:

- By flashing the brake lamps
- By activating the hazard warning lights

If the vehicle is braked sharply from speeds above 50 km/h, the brake lamps flash rapidly. This provides traffic travelling behind you with an even more noticeable warning.

If the vehicle is travelling at speeds of more than 70 km/h at the beginning of the brake application, the hazard warning lights switch on once the vehicle is stationary. When pulling away again, the hazard warning lights switch off automatically at approx. 10 km/h.

You can also switch off the hazard warning lights using the hazard warning button (⟶ page 63).

ATTENTION ASSIST

FUNCTION OF ATTENTION ASSIST

ATTENTION ASSIST assists you on long, monotonous journeys, e.g.on motorways and trunk roads. If signs of fatigue or increasing lapses in concentration on the part of the driver are detected, the system suggests taking a break.

ATTENTION ASSIST serves solely as an aid. It cannot always promptly detect fatigue or lapses in concentration. The system is not a substitute for a well-rested and attentive driver. On long journeys, take regular, timely breaks to allow for adequate recovery.

YOU CAN CHOOSE BETWEEN TWO SETTINGS:

- **Standard:** normal system sensitivity.
- **Sensitive:** higher system sensitivity. The driver is warned earlier and the attention level detected by the system is adapted accordingly.

If fatigue or increasing lapses in concentration are detected, the warning ATTENTION ASSIST: Take a break! appears on the driver display.

You can acknowledge the message and take a break as necessary. If you do not take a break and ATTENTION ASSIST continues to detect increasing lapses in concentration, you will be warned again after a minimum of 15 minutes.

If ATTENTION ASSIST is unable to calculate the attention level and cannot issue a warning, the System suspended message appears.

If the driver display shows a warning, a rest area search is offered in the multimedia system. You can select a rest area and start navigation to this rest area.

When you restart the vehicle, ATTENTION ASSIST is automatically switched on. The last selected sensitivity level remains stored.

THE FOLLOWING INFORMATION IS SHOWN ON THE DRIVER DISPLAY:

- The length of the journey since the last break
- The attention level determined by ATTENTION ASSIST:
  - The more segments (1) of the circle displayed, the higher the detected attention level.
  - Fewer segments (1) are displayed in the circle as the attention level decreases.

ⓘ Depending on the respective vehicle equipment and country of use, ATTENTION ASSIST features a distraction detection sub-function. This function is only available in conjunction with the driver camera (→ page 525).

DISTRACTION DETECTION

ATTENTION ASSIST can use the driver camera to detect when the driver is distracted by averting his or her gaze from the road ahead.

If the system detects driver distraction, the white ATTENTION ASSIST Remain alert! message appears after a few seconds and a warning tone sounds. If the driver does not turn their attention back to the traffic situation, the message will be displayed repeatedly.

STATUS DISPLAY OF ATTENTION ASSIST

Yellow: distraction detection is malfunctioning. Pay attention to the display messages.

Yellow: the system is not available. Pay attention to the display messages.

White: the system is switched off (country-dependent).

SYSTEM LIMITS

- ATTENTION ASSIST is active in the 60 km/h to 200 km/h speed range.
- The distraction detection subfunction is available from approx.20 km/h.

THE FUNCTIONALITY OF ATTENTION ASSIST IS RESTRICTED, AND WARNINGS MAY BE DELAYED OR NOT ISSUED AT ALL IN THE FOLLOWING SITUATIONS IN PARTICULAR:

- If you have been driving for less than approximately 30 minutes.
- If the road condition is poor (uneven road surface or potholes).
- If there is a strong side wind.
- If you adopt a sporty driving style (high cornering speeds or high rates of acceleration).
- If the Active Steering Assist function of Active Distance Assist DISTRONIC is active.
- If the clock is set to the incorrect time.
- If you change lanes and vary your speed frequently in active driving situations.
- If ESP® is not available

DISTRACTION DETECTION WILL ALSO NOT FUNCTION IF THE DRIVER CAMERA CANNOT DETECT THE EYES OF THE DRIVER, DUE TO THE FOLLOWING FACTORS, FOREXAMPLE:

- the driver's eyes cannot be detected due to the steering column position, forexample
- poor lighting conditions
- certain types of spectacles or sunglasses
- the driver's line of vision is outside the driver camera's field of vision

Refer also to the information regarding display messages that can be shown on the driver display.

THE ATTENTION ASSIST DROWSINESS OR ALERTNESS ASSESSMENT IS RESET AND RESTARTED WHEN CONTINUING THE JOURNEY IN THE FOLLOWING SITUATIONS:

- You switch off the vehicle.
- You unfasten your seat belt and open the driver's door (e.g.to change drivers or take a break).

SETTING ATTENTION ASSIST

Multimedia system:

Settings ▶▶ Assistance ▶▶ ATTENTION ASSIST

SETTING OPTIONS

▶ Select Standard, Sensitive or Off.

SUGGESTING A REST AREA

▶ Select Suggest rest area.

▶ Activate or deactivate the function.

If ATTENTION ASSIST detects fatigue or increasing lapses in concentration, the system suggests a nearby rest area.

▶ Select a suggested rest area.

You are guided to the selected rest area.

Cruise control and limiter

FUNCTION OF CRUISE CONTROL

Cruise control regulates the speed to the value selected by the driver.

If you accelerate to overtake, forexample, the stored speed is not deleted. If you remove your foot from the accelerator pedal after overtaking, cruise control will resume speed regulation back to the stored speed.

You can store any speed above 20 km/h up to the maximum design speed or up to the stored winter tyre limit.

Observe the information on driving systems and be aware of your personal responsibility, otherwise you may fail to recognise potential dangers (→ page 391).

NOTIFICATIONS ON THE DRIVER DISPLAY

Grey: cruise control is selected but not yet active or temporarily in passive mode.

Green: cruise control is activated.

A stored speed is shown under the display and is indicated in the speedometer.

SYSTEM LIMITS
Cruise control may be unable to maintain the stored speed on uphill gradients. The stored speed is resumed when the uphill gradient evens out and the vehicle's speed does not fall below 20 km/h.

On long and steep downhill gradients, you must shift down to a lower gear in good time. This is particularly important when driving a laden vehicle. You are thus making full use of the engine's braking effect. This will take some of the strain off the brake system and prevent the brakes from overheating and wearing too quickly.

If you change wheel size on your vehicle, ensure that it is assigned to the correct wheel size group (⟶ page 699). If the assignment is changed without recoding the control units in the vehicle, the cruise control function may be impaired.

DO NOT USE CRUISE CONTROL IN THE FOLLOWING SITUATIONS:

- in traffic situations which require frequent changes of speed, e.g. in heavy traffic, on winding roads
- off-road or on construction sites
- on slippery or slick roads, as the drive wheels can lose traction when accelerating and the vehicle can then begin skidding
- if there is poor visibility

FUNCTION OF THE LIMITER
The limiter restricts the speed of the vehicle. To reduce the speed to the stored speed, the limiter applies the brakes automatically.

YOU CAN LIMIT THE SPEED AS FOLLOWS:

- **Variable:** for short-term limitation of the travel speed, e.g.in built-up areas
- **Permanent:** for a longer-term speed restriction, e.g.in winter tyre mode

You can set any speed above 20 km/h. You can also perform settings while the vehicle is stationary once the vehicle has been started.

Observe the notes on driving systems and your responsibility. You may otherwise fail to recognise potential dangers.(⟶ page 391)

NOTIFICATIONS ON THE DRIVER DISPLAY

LIM **Grey:** variable limiter is selected but not yet activated.

LIM **Flashing grey:** variable limiter is temporarily in passive mode.

LIM **Green:** variable limiter is activated.

A stored speed is shown under the display LIM and is indicated in the speedometer.

If you change wheel size on your vehicle, ensure that it is assigned to the correct wheel size group (⟶ page 699). If the assignment is changed without recoding the control units in the vehicle, the limiter may be impaired.

KICKDOWN
If you depress the accelerator pedal beyond the pressure point (kickdown), the variable limiter switches to passive mode.

The driver display shows the message LIM passive and the indicator LIM flashes.

THE VARIABLE LIMITER IS REACTIVATED IN THE FOLLOWING SITUATIONS:

- If the travel speed drops below the stored speed.
- If the stored speed is called up.
- If you store a new speed.

OPERATING CRUISE CONTROL OR THE VARIABLE LIMITER

WARNING
Risk of accident due to stored speed

If you call up the stored speed and this is lower than your current speed, the vehicle decelerates.

▶ Take into account the traffic situation before calling up the stored speed.

Requirements:

CRUISE CONTROL

- Cruise control is selected.
- The parking brake has been released.
- ESP® must be activated but not intervening.
- The travel speed is at least 20 km/h.
- The transmission is in position D.
- The brake pedal is not depressed.

VARIABLE LIMITER

- The variable limiter is selected.

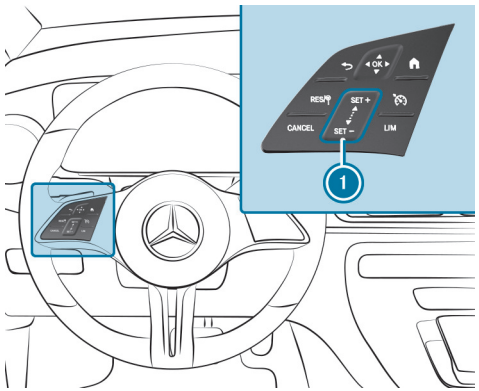

Steering wheel control panel for cruise control and variable limiter

RES/	Adopts the stored/detected speed
CANCEL	Deactivates cruise control/variable limiter
1 SET + SET -	Switch panel to increase/decrease speed
	Selects cruise control
LIM	Selects the variable limiter

Operating cruise control and the variable limiter:

▶ Press the corresponding button with only one finger or swipe across the control panel.

Switching between cruise control and the variable limiter:

▶ **To select cruise control:** press .

▶ **To select the variable limiter:** press LIM.

ⓘ Vehicles with Active Distance Assist DISTRONIC: the variable limiter is selected using a different button (⟶ page 413).

Activating cruise control or the variable limiter:

- Press SET + or SET - on the control panel 1.
  The current travel speed is stored and maintained by the vehicle via cruise control, or is restricted by the variable limiter.

or

- Press RES/.
  The last stored speed is called up and maintained by the vehicle via cruise control, or is restricted by the variable limiter.
  The current travel speed is stored if the last stored speed has been deleted.

> When you switch off the vehicle, the last speed stored is deleted. When you activate cruise control or Active Distance Assist DISTRONIC, the last speed stored for the variable limiter is deleted.

Increasing/decreasing the stored speed:

- To increase the stored speed: swipe the control panel 1 from the bottom up.
  The stored speed is increased by 1 km/h.
- To decrease the stored speed: swipe the control panel 1 from the top down.
  The stored speed is decreased by 1 km/h.

or

- Briefly press SET + or SET - on the control panel 1.
  The stored speed is increased or decreased to the next increment of ten (e.g. to 50 km/h or 60 km/h).

or

- Press and hold SET + or SET - on the control panel 1.
  The stored speed is increased or decreased to the next increment of ten, and afterwards by increments of 10 km/h.

or

- Accelerate the vehicle to the desired speed.
- Press SET + on the control panel 1.

> When the variable limiter is switched to passive mode, you cannot increase or decrease its stored speed in increments of 1 km/h.

Adopting a detected speed:

If cruise control/the variable limiter is activated and Traffic Sign Assist has detected a traffic sign with a maximum permissible speed and this is displayed on the driver display:

- Press RES/.
  The maximum permissible speed shown by the traffic sign is stored and the vehicle maintains, or does not exceed this speed.

Deactivating cruise control or the variable limiter:

- Press CANCEL.

ⓘ If you brake, deactivate ESP®, or if ESP® intervenes, cruise control is deactivated. The variable limiter is not deactivated.

INFORMATION ON THE PERMANENT LIMITER

ⓘ The permanent limiter is only available in certain countries.

If the vehicle should never exceed a specific speed (e.g. for driving in winter tyre mode), you can set this speed with the permanent limiter.

You do this by limiting the speed to a value between 160 km/h and 240 km/h in the multimedia system (⟶ page 55).

Shortly before reaching the set speed, the speed appears on the driver display. When you confirm the message, display messages no longer appear until you switch off the vehicle. The speed will only be displayed again once the vehicle has been restarted or if the set speed is changed.

The permanent limiter does not switch to passive mode even during kickdown, and the driven speed remains below the set speed.

SETTING THE SPEED LIMITATION FOR WINTER TYRES
Multimedia system:

⟶ ⌂ ▶▶ Settings ▶▶ Vehicle ▶▶ Winter tyre limit

▶ Select a speed or deactivate the function.

Active Distance Assist DISTRONIC

FUNCTION OF ACTIVE DISTANCE ASSIST DISTRONIC
Active Distance Assist DISTRONIC maintains the set speed on a free-flowing road. If vehicles are detected ahead the set distance is maintained, if necessary until the vehicle comes to a standstill. The vehicle is accelerated or braked in correlation with the distance to the vehicle in front and with the set speed.

Speed and distance are set and stored on the steering wheel.

Available speed range: 20 km/h - 160 km/h

OTHER FEATURES OF ACTIVE DISTANCE ASSIST DISTRONIC:

- Adjusts the driving style depending on the selected drive program (fuel-saving, comfortable or dynamic)
- Initiation of acceleration to the stored speed if the turn signal indicator is switched on to change to the overtaking lane.
- **Vehicles with Driving Assistance Package:**
  - Reaction to detected stationary vehicles up to a speed of approx. 30 km/h (with the exception of bicycles and motorcycles)
  - Takes one-sided overtaking restrictions into account on motorways or multi-lane roads with separate carriageways (country-dependent)

Vehicles with Driving Assistance Package and Parking Package: If the vehicle has been braked to a standstill on multi-lane, separate carriageways by Active Distance Assist DISTRONIC, it can automatically follow the vehicle in front when driving off again within 60 seconds. If a critical situation is detected when driving off, a visual and acoustic warning is issued indicating that the driver must now take control of the vehicle. The vehicle is not accelerated any further.

Observe the information on driving systems and be aware of your personal responsibility, otherwise you may fail to recognise potential dangers (⟶ page 391).

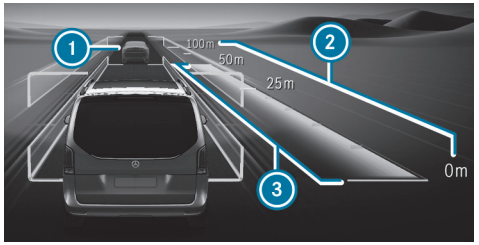

Notification on the driver display in the Assistance menu

1. Vehicle in front
2. Distance indicator
3. Set specified distance

The vehicle detected in front 1 is highlighted in green. It may also be in the lane to the right of your vehicle in situations where it is not permitted to overtake on the left, forexample, on UK motorways.

PERMANENT STATUS DISPLAY

Grey: Active Distance Assist DISTRONIC selected but not yet active.

Green speedometer, grey vehicle: Active Distance Assist DISTRONIC active, speed set.

Green: Active Distance Assist DISTRONIC active and vehicle detected.

The stored speed is shown under the permanent status display and indicated in the speedometer. Active Distance Assist DISTRONIC's status display is greyed out when in passive mode.

If the speed of the vehicle in front or the ascertained target speed due to the route event ahead is less than the stored speed, the segments in the speedometer light up.

If you increase or decrease the specified distance 3, the notification appears briefly.

On motorways or high-speed major roads, the green vehicle symbol is displayed cyclically when the vehicle is ready to pull away.

The system can be switched to passive mode by depressing the accelerator pedal while Active Distance Assist DISTRONIC is active. The suspended message appears briefly on the driver display.

SYSTEM LIMITS

THE SYSTEM MAY BE IMPAIRED OR INOPERATIVE IN THE FOLLOWING SITUATIONS, FOREXAMPLE:

- In snow, rain, fog, heavy spray, if there is glare, in direct sunlight or in greatly varying light conditions.
- If the windscreen in the area of the camera is dirty, misted up, damaged or covered.
- If there is dirt on the radar sensors or if the radar sensors are covered.
- In multi-storey car parks or on roads with steep uphill or downhill gradients.
- If there are narrow vehicles in front, such as bicycles or motorcycles.

Additionally, braking or accelerating on slippery or slick roads can cause one or several wheels to lose traction and the vehicle could then begin skidding.

Do not use Active Distance Assist DISTRONIC in these situations.

WARNING
Risk of accident from acceleration or braking by Active Distance Assist DISTRONIC

ACTIVE DISTANCE ASSIST DISTRONIC MAY ACCELERATE OR BRAKE IN THE FOLLOWING CASES, FOR EXAMPLE:

- If the vehicle pulls away using Active Distance Assist DISTRONIC.
- If the stored speed is called up and is considerably faster or slower than the currently driven speed.
- If Active Distance Assist DISTRONIC no longer detects a vehicle in front or does not react to relevant objects.

► Always carefully observe the traffic conditions and be ready to brake at all times.

► Take into account the traffic situation before calling up the stored speed.

WARNING
Risk of accident due to insufficient deceleration by Active Distance Assist DISTRONIC

Active Distance Assist DISTRONIC brakes your vehicle with up to 50% of the possible deceleration. If this deceleration is not sufficient, Active Distance Assist DISTRONIC alerts you with a visual and acoustic warning.

► Adjust your speed and maintain a suitable distance from the vehicle in front.

► Brake the vehicle yourself and/or take evasive action.

WARNING
Risk of accident if detection function of Active Distance Assist DISTRONIC is impaired

ACTIVE DISTANCE ASSIST DISTRONIC DOES NOT REACT OR HAS A LIMITED REACTION:

- when driving on a different lane or when changing lanes
- to pedestrians, animals, bicycles or stationary vehicles, or unexpected obstacles
- to complex traffic conditions
- to oncoming vehicles and crossing traffic

As a result, Active Distance Assist DISTRONIC may neither give warnings nor intervene in such situations.

► Always observe the traffic conditions carefully and react accordingly.

WARNING
Risk of accident due to speed adaptation via Active Speed Limit Assist

The speed limit adopted by Active Speed Limit Assist may be too high or otherwise erroneous in certain circumstances:

- with speed limits below 20 km/h
- due to weather, e.g. in wet or foggy conditions

► Ensure that the speed driven always complies with the traffic regulations.

► Adjust the speed driven to the current traffic and weather conditions.

OPERATING ACTIVE DISTANCE ASSIST DISTRONIC AND OPERATING THE VARIABLE LIMITER

⚠ **WARNING**
Risk of accident if detection function of Active Distance Assist DISTRONIC is impaired

ACTIVE DISTANCE ASSIST DISTRONIC DOES NOT REACT OR HAS A LIMITED REACTION:

- when driving on a different lane or when changing lanes
- to pedestrians, animals, bicycles or stationary vehicles, or unexpected obstacles
- to complex traffic conditions
- to oncoming vehicles and crossing traffic

As a result, Active Distance Assist DISTRONIC may neither give warnings nor intervene in such situations.

► Always observe the traffic conditions carefully and react accordingly.

⚠ **WARNING**
Risk of accident from acceleration or braking by Active Distance Assist DISTRONIC

ACTIVE DISTANCE ASSIST DISTRONIC MAY ACCELERATE OR BRAKE IN THE FOLLOWING CASES, FOR EXAMPLE:

- If the vehicle pulls away using Active Distance Assist DISTRONIC.
- If the stored speed is called up and is considerably faster or slower than the currently driven speed.
- If Active Distance Assist DISTRONIC no longer detects a vehicle in front or does not react to relevant objects.

► Always carefully observe the traffic conditions and be ready to brake at all times.

► Take into account the traffic situation before calling up the stored speed.

WARNING
Risk of accident due to insufficient deceleration by Active Distance Assist DISTRONIC

Active Distance Assist DISTRONIC brakes your vehicle with up to 50% of the possible deceleration. If this deceleration is not sufficient, Active Distance Assist DISTRONIC alerts you with a visual and acoustic warning.

- ► Adjust your speed and maintain a suitable distance from the vehicle in front.
- ► Brake the vehicle yourself and/or take evasive action.

WARNING
Risk of accident due to speed adaptation via Active Speed Limit Assist

The speed limit adopted by Active Speed Limit Assist may be too high or otherwise erroneous in certain circumstances:

- with speed limits below 20 km/h
- due to weather, e.g. in wet or foggy conditions

- ► Ensure that the speed driven always complies with the traffic regulations.
- ► Adjust the speed driven to the current traffic and weather conditions.

Requirements

ACTIVE DISTANCE ASSIST DISTRONIC:

- The parking brake has been released.
- ESP® is activated and is not intervening.
- The transmission is in position D.
- The doors and tailgate are closed.
- Checking of the radar sensor system has been successfully completed.
- The driver's seat belt is fastened.
- Active Parking Assist is not active.
- DSR is deactivated.

VARIABLE LIMITER:

- The variable limiter is selected.

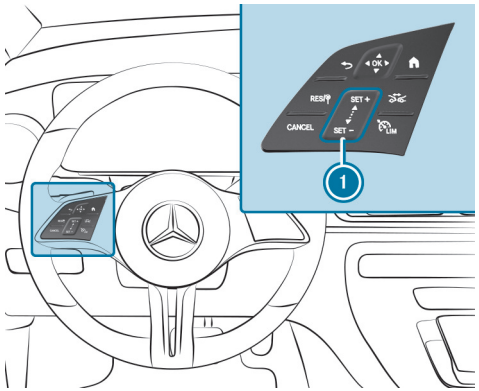

RES/	Adopts the stored/detected speed
CANCEL	Deactivates Active Distance Assist DISTRONIC/the variable limiter

(1) SET + SET - Control panel to increase/decrease speed

Increases/decreases the specified distance

Switches between the variable limiter and Active Distance Assist DISTRONIC

► **To operate Active Distance Assist DISTRONIC or the variable limiter:** press the respective button with only one finger or swipe across the control panel.

SWITCHES BETWEEN THE VARIABLE LIMITER AND ACTIVE DISTANCE ASSIST DISTRONIC

► Press .

ACTIVATING ACTIVE DISTANCE ASSIST DISTRONIC OR THE VARIABLE LIMITER

► **To activate without a stored speed:** press SET +, SET - or RES/. **Active Distance Assist DISTRONIC:** remove your foot from the accelerator pedal.

The current vehicle speed is stored and maintained by the vehicle via Active Distance Assist DISTRONIC or is restricted by the variable limiter.

or

► **To activate with a stored speed:** press RES/. **Active Distance Assist DISTRONIC:** remove your foot from the accelerator pedal.

The last stored speed is called up and maintained by the vehicle via Active Distance Assist DISTRONIC or is restricted by the variable limiter.

If the stored speed has been deleted, the current vehicle speed is stored.

ⓘ When you switch off the vehicle, the stored speed is deleted. When you activate Active Distance Assist DISTRONIC, the speed stored for the variable limiter is deleted.

INCREASING OR DECREASING THE STORED SPEED

► **To increase:** swipe the control panel (1) from the bottom up.

The speed is increased by 1 km/h.

► **To decrease:** swipe the control panel (1) from the top down.

The speed is decreased by 1 km/h.

or

► Press SET + or SET - briefly on the control panel (1).

The speed is increased or decreased by 10 km/h.

or

► Press and hold SET + or SET - on the control panel (1).

The speed is increased or decreased in 10 km/h increments.

or

► Accelerate the vehicle to the desired speed.

► Press SET + on the control panel (1).

ADOPTING A SPEED RESTRICTION DETECTED BY TRAFFIC SIGN ASSIST AND SHOWN ON THE DRIVER DISPLAY

► Activate Active Distance Assist DISTRONIC or the variable limiter: press SET +, SET - or RES/.

► Adopt the displayed speed restriction: press RES/.

The speed restriction displayed on the driver display is adopted as the stored speed. The vehicle adapts its speed to that of the vehicle in front, but only up to the stored speed, or limits its speed accordingly.

ⓘ A speed restriction shown on the driver display is only adopted during travel, and not when the vehicle is at a standstill.

PULLING AWAY WITH ACTIVE DISTANCE ASSIST DISTRONIC

- Activate Active Distance Assist DISTRONIC and remove your foot from the brake pedal.
- Press RES/.

or

- Depress the accelerator pedal briefly and firmly.

  The functions of Active Distance Assist DISTRONIC remain active.

REDUCING OR INCREASING THE SPECIFIED DISTANCE FROM THE VEHICLE IN FRONT

- Press .

  The notification appears. The specified distance is reduced by one level.

  If the lowest level is already selected, the selection jumps to the highest level.

DEACTIVATING ACTIVE DISTANCE ASSIST DISTRONIC OR THE VARIABLE LIMITER

⚠ **WARNING**
Risk of an accident due to Active Distance Assist DISTRONIC being active when you leave the driver's seat

If you leave the driver's seat while the vehicle is being braked by Active Distance Assist DISTRONIC only, the vehicle can roll away.

- Always deactivate Active Distance Assist DISTRONIC and secure the vehicle to prevent it from rolling away before you leave the driver's seat.

- Press CANCEL.

ⓘ If you brake, deactivate ESP® or if ESP® intervenes, Active Distance Assist DISTRONIC is deactivated. The variable limiter is not deactivated.

FUNCTION OF ACTIVE SPEED LIMIT ASSIST

If a changed speed limit is detected and the automatic adoption of speed limits is switched on, this is automatically adopted as the stored speed (⟶ page 418). Speed limits below 20 km/h are not accepted.

Adjustment of the travel speed is initiated no later than when the vehicle is level with the traffic sign. For signs indicating entry into an urban zone, the speed is adapted according to that permitted within the built-up area. The speed restriction indicator on the driver display is always refreshed when the vehicle is level with the traffic sign.

If you are driving on German motorways with no speed limit, the system uses the speed stored for a stretch of road with no speed limit as the set speed. If

you do not alter the stored speed on a stretch of road with no speed limit, the recommended speed of 130 km/h is adopted.

If Active Distance Assist DISTRONIC has been switched to passive mode by pressing the accelerator pedal, only speed limits which are higher than the set speed are adopted.

The maximum permissible speed does not consider the road condition and current weather and traffic conditions. Adjust your speed accordingly as necessary.

Observe the information on driving systems and be aware of your personal responsibility, otherwise you may fail to recognise potential dangers (→ page 391).

SYSTEM LIMITS

The system limits of Traffic Sign Assist apply to the detection of traffic signs (→ page 428).

Speed limits below 20 km/h are not automatically adopted by the system as the stored speed. Temporary speed restrictions (e.g.for a specific time or due to weather conditions) cannot be unequivocally detected by the system.

Adjust your speed in these situations.

WARNING
Risk of accident due to speed adaptation via Active Speed Limit Assist

The speed limit adopted by Active Speed Limit Assist may be too high or otherwise erroneous in certain circumstances:

- with speed limits below 20 km/h
- due to weather, e.g. in wet or foggy conditions

▶ Ensure that the speed driven always complies with the traffic regulations.

▶ Adjust the speed driven to the current traffic and weather conditions.

FUNCTION OF ROUTE-BASED SPEED ADAPTATION

When Active Distance Assist DISTRONIC is activated, the travel speed will be adapted to the route events ahead. Depending on the drive program selected, the vehicle negotiates a route event ahead in a fuel-saving, comfortable or dynamic manner. When the route event has been passed, the vehicle accelerates again to the stored speed. The set distance to the vehicle in front, vehicles detected ahead and speed restrictions ahead are taken into account.

Route-based speed adaptation can be activated in the multimedia system (→ page 418).

THE FOLLOWING ROUTE EVENTS ARE TAKEN INTO ACCOUNT:

- Bends
- Roundabouts
- T-junctions
- Turns and exits

ALSO, THE SPEED IS REDUCED IF THE TURN SIGNAL INDICATOR IS SWITCHED ON AND ONE OF THE FOLLOWING SITUATIONS IS DETECTED:

- Turning off at junctions
- Driving in slowing-down lanes
- Driving in lanes adjacent to slowing-down lanes

The driver is responsible for choosing a suitable speed and observing other road users. This applies in particular to junctions, roundabouts and traffic lights, as route-based speed adaptation does not brake the vehicle to a standstill.

When route guidance is active, the first speed adaptation is carried out automatically. If the turn signal indicator is switched on, the selected route is confirmed and further speed adaptation is activated.

SPEED ADAPTATION IS CANCELLED IN THE FOLLOWING CASES:

- if the turn signal indicator is switched off before the route event and it is therefore presumed that the route event is not deemed relevant by the driver
- if the driver depresses the accelerator pedal or brake pedal during the process.

SYSTEM LIMITS

Route-based speed adaptation does not take right of way regulations into account. The driver is responsible for complying with road traffic regulations and driving at a suitable speed.

IN DIFFICULT CONDITIONS, THE SPEED SELECTION MADE BY THE SYSTEM MAY NOT ALWAYS BE SUITABLE. THIS APPLIES TO THE FOLLOWING SITUATIONS, FOREXAMPLE:

- The road's course is not clearly visible
- Road narrowing
- Varying maximum permissible speeds in individual lanes, forexample, at toll stations
- Wet road surfaces, snow or ice
- If transport equipment, e.g. a trailer or bicycle rack, is attached to the trailer hitch and the electrical connection has been correctly established

In these situations the driver must intervene accordingly.

WARNING
Risk of accident in spite of route-based speed adaptation

Route-based speed adaptation can malfunction or be temporarily unavailable in the following situations:

- If the driver does not follow the calculated route
- If map data is not up-to-date or available
- In the event of roadworks
- In bad weather or road conditions
- If the accelerator pedal is depressed
- In the event of electronically displayed speed limitations

▶ Adapt the speed to the traffic situation.

SETTING ACTIVE DISTANCE ASSIST DRIVING STYLES

Requirements

- Active Distance Assist DISTRONIC is switched on.

Multimedia system:

Settings ▶▶ Assistance ▶▶ Driving ▶▶ Active Distance Assist

SETTING SPEED ADAPTATION

▶ Select Adopt speed limit or Route-based speed adjustment.

When these functions are active, the travel speed is adapted depending on the route events ahead or in accordance with a speed restriction.

ⓘ **IF ONE OF THE FOLLOWING SYSTEMS IS ACTIVATED, THE DETECTED SPEED CAN BE MANUALLY ADOPTED AS THE MAXIMUM PERMISSIBLE SPEED:**

- Active Distance Assist DISTRONIC
- Variable limiter

ⓘ Additional information on speed adaptation (⟶ page 417).

DSR (Downhill Speed Regulation)

NOTES ON DSR

⚠ **WARNING**
Risk of skidding and accident when DSR is activated on slippery road surfaces

If the driven speed and the target speed differ, the wheels may lose traction.

▶ Take into account the road surface and the difference between the driving speed and target speed before activating DSR.

DSR is a downhill driving assist function. It keeps the speed of travel at the selected target speed. The steeper the downhill gradient, the greater the DSR braking effect on the vehicle. On flat stretches of road and uphill gradients, the DSR will apply the brakes minimally or not at all.

Observe the information on driving systems and be aware of your personal responsibility, otherwise you may fail to recognise potential dangers (⟶ page 391).

You are always responsible for keeping control of the vehicle and for assessing whether the downhill gradient can be negotiated. Depending on road surface conditions and tyres, DSR may not always be able to maintain the target speed. Select a target speed suitable for the ambient conditions and also apply the brakes yourself if required.

When DSR is activated and the transmission is in position D, R or N, DSR will control your speed. The target speed can be set to a value between 4 km/h and 18 km/h using the brake and accelerator pedal or the control panel on the steering wheel. By braking or accelerating, you can drive at a lower or higher speed than the target speed at any time.

DSR will be switched off automatically if you drive at a speed greater than 45 km/h.

The DSR off message will appear on the driver display and the status indicator will disappear. You will also hear a warning tone.

ACTIVATING/DEACTIVATING DSR

Requirements

- You are driving at a speed less than 40 km/h or the vehicle is stationary.
  If the vehicle speed is too high, a message reading Max. speed 40 km/h will appear on the driver display.
- Active Distance Assist DISTRONIC is deactivated.

ACTIVATING/DEACTIVATING DSR

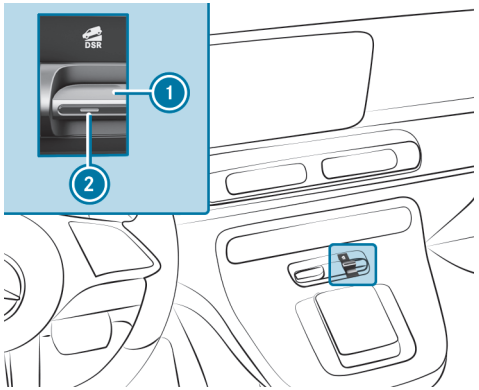

► Press the button 1.

DSR is active when indicator lamp 2 lights up and the symbol DSR appears on the driver display.

CHANGING THE TARGET SPEED

CHANGE TARGET SPEED WITH BRAKE PEDAL OR ACCELERATOR PEDAL

ⓘ When DSR is activated, you can change the target speed to a value between 4 km/h and 18 km/h using the brake and accelerator pedals or the control panel on the steering wheel.

► Brake or accelerate the vehicle to the desired speed between 4 km/h and 18 km/h.

► Release the brake pedal or accelerator pedal.

The current speed is stored. When the vehicle is stationary, 4 km/h or the minimum possible speed for each gear range will be stored. DSR will maintain the stored speed on the downhill gradient and will brake automatically.

The set target speed is shown under the green status display DSR on the driver display.

CHANGE TARGET SPEED WITH THE CONTROL PANEL ON THE STEERING WHEEL

ⓘ When DSR is activated, you can change the target speed to a value between 4 km/h and 18 km/h.

The target speed can only be increased or decreased after the currently set target speed has been reached.

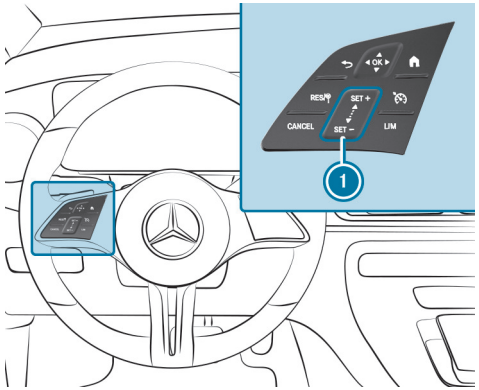

► **To increase the target speed:** swipe the control panel 1 from the bottom up.

The target speed is increased by 1 km/h.

or

► At the top of the control panel 1, press SET + and hold pressed.

The target speed is increased in 1 km/h increments.

- **To decrease the target speed:** swipe the control panel (1) from the top down.
  The target speed is decreased by 1 km/h.

or

- At the top of the control panel (1), press SET - and hold pressed.
  The target speed is decreased in 1 km/h increments.

The set target speed is shown alongside the status display DSR on the driver display.

Active Steering Assist

FUNCTION OF ACTIVE STEERING ASSIST

Active Steering Assist is only available up to a speed of 160 km/h. The system helps you to stay in the centre of the lane by means of moderate steering interventions. Depending on the speed driven, Active Steering Assist uses the vehicles ahead and lane markings as a reference.

> ⓘ Depending on the respective country of use, in the lower speed range Active Steering Assist can use the surrounding traffic as a reference. Active Steering Assist can also provide support when driving outside the centre of the lane, forexample, to form an emergency corridor.

If the detection of lane markings and vehicles ahead is impaired, Active Steering Assist switches to passive mode. The system provides no support in this case.

STATUS DISPLAY OF ACTIVE STEERING ASSIST

Grey: activated and in passive mode

Green: activated and in active mode

Red: system limits detected

White, red hands: "hands on the steering wheel" prompt

> ⓘ During the transition from active mode to passive mode, the symbol is shown as enlarged and flashing. Once the system is in passive mode, the symbol is shown as grey on the driver display.

> ⓘ Depending on the selected vehicle settings, Active Steering Assist may be unavailable.

STEERING AND TOUCH DETECTION

The driver is required to keep their hands on the steering wheel at all times and be able to intervene at any time to correct the course of the vehicle and keep it in lane. The driver must expect a change from active mode to passive mode or vice versa at any time.

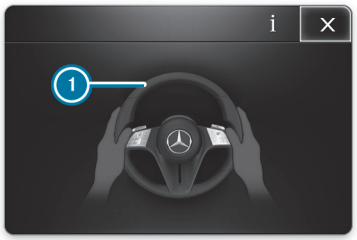

If the system detects that the driver has not steered the vehicle for a considerable period of time or has removed their hands from the steering wheel, the display (1) appears. If the driver still does not steer the vehicle, a warning tone sounds in addition to the visual warning message.

If the driver does not react to this warning for a considerable period, an emergency stop can be initiated (⟶ page 423).

The warning is not issued, or stops as soon as the system detects the driver touching or steering the steering wheel.

Touch detection may be limited or inoperative if there is no direct contact between the hands and the steering wheel, e.g.when wearing gloves or if there is a steering wheel cover on the steering wheel.

If Active Steering Assist detects that a system limit has been reached, a visual warning is issued and a warning tone sounds.

Observe the information on driving systems and be aware of your personal responsibility, otherwise you may fail to recognise potential dangers (⟶ page 391).

SYSTEM LIMITS
Active Steering Assist has a limited steering torque for lateral guidance. In some cases, the steering intervention is not sufficient to keep the vehicle in the lane or to drive through exits.

THE SYSTEM MAY BE IMPAIRED OR INOPERATIVE IN THE FOLLOWING INSTANCES:

- There is poor visibility, e.g.due to snow, rain, fog, heavy spray, greatly varying light conditions or dense shadows on the carriageway.
- There is glare, e.g.from oncoming traffic, direct sunlight or reflections.
- Insufficient road illumination.
- The windscreen is dirty, misted up, damaged or covered in the vicinity of the camera, e.g.by a sticker.
- There are no lane markings in a given lane, or the markings are not easily discernible or change quickly, forexample, in a construction area or at junctions.
- The lane markings are worn away, dark or covered up, forexample, by dirt or snow
- If the distance to the vehicle in front is too short and the lane markings cannot be detected
- The roadway is narrow and winding
- There are obstacles on the lane or projecting out into the lane, suchas object markers.
- If transport equipment, e.g.a trailer or bicycle rack, is attached to the trailer hitch and the electrical connection has been correctly established

THE SYSTEM DOES NOT PROVIDE ASSISTANCE IN THE FOLLOWING CONDITIONS:

- On tight bends and when turning.
- When crossing junctions.
- At roundabouts or toll stations.
- When the tyre pressure is too low.

⚠ **WARNING**
Risk of accident if Active Steering Assist unexpectedly stops functioning

If the system limits of Active Steering Assist are reached there is no guarantee that the system will remain active or will keep the vehicle in lane.

► Always keep your hands on the steering wheel and observe the traffic carefully.

► Always steer the vehicle paying attention to traffic conditions.

WARNING
Risk of accident if Active Steering Assist unexpectedly intervenes

The detection of lane markings and objects may malfunction and cause unexpected steering interventions.

▶ Steer according to traffic conditions.

ACTIVATING/DEACTIVATING ACTIVE STEERING ASSIST

Requirements

- ESP® is activated but is not intervening.
- Active Distance Assist DISTRONIC is switched on.

Multimedia system:

→ ⌂ ▶▶ Settings ▶▶ Assistance ▶▶ Driving

▶ Activate or deactivate Active Steering Assist.

Function of Active Emergency Stop Assist

ⓘ The following function is only available in combination with the Driving Assistance Package.

Active Emergency Stop Assist monitors the steering wheel, as well as the accelerator and brake pedals. If the system detects a lack of driver activity and the vehicle is in danger of leaving the lane, a warning can be issued and an emergency stop initiated.

If Active Steering Assist is switched off, the system is available from a speed of approx. 60 km/h.

IF THE VEHICLE IS IN DANGER OF LEAVING THE LANE, A WARNING IS ISSUED IN THE FOLLOWING CASES.

- The driver has not touched the steering wheel for a certain while, or no steering movement is detected for a lengthy period (depending on the respective vehicle equipment).
- Neither the accelerator pedal nor the brake pedal is depressed.

ⓘ If Active Steering Assist is switched on and active, the system only monitors the steering wheel. If the driver has not touched the steering wheel for a certain while, a warning may be issued despite pedal actuation.
Observe also the instructions on the touch detection of Active Steering Assist (→ page 421).

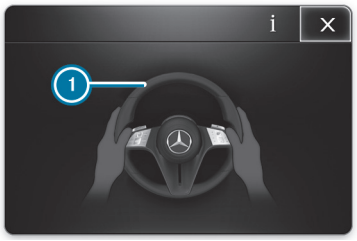

ACTIVE EMERGENCY STOP ASSIST ISSUES THE FOLLOWING WARNINGS IN ORDER:

- The notification ① appears on the driver display.
- In addition to the notification ①, a warning tone sounds.
- The Beginning emergency stop message appears on the driver display, a continuous warning tone sounds and the vehicle will no longer accelerate. Additionally, a gentle tensioning of the belt is effected as necessary.

- The vehicle speed is reduced in increments until the vehicle comes to a standstill. Sharp brake impulses are also effected.

When automatic braking is initiated, Active Distance Assist DISTRONIC is deactivated. Depending on the respective country of use, the hazard warning light system is also switched on.

WHEN THE VEHICLE HAS COME TO A STANDSTILL:

- the vehicle is secured with the electric parking brake.
- the vehicle is unlocked.
- if possible, an emergency call is made to the Mercedes-Benz emergency call centre.

Before the Beginning emergency stop message appears, you can cancel Active Emergency Stop Assist by manually turning the steering wheel.

ONCE THE BEGINNING EMERGENCY STOP MESSAGE HAS BEEN DISPLAYED, ACTIVE EMERGENCY STOP ASSIST CAN BE CANCELLED AS FOLLOWS:

- Accelerating or braking: the emergency stop is cancelled, but the warning message, warning tone and electric power steering remain active.
- Steering: electric power steering is cancelled, the warning message and warning tone remain active, and the vehicle continues to be braked.
- Steering and accelerating or braking: the emergency stop and electric power steering are cancelled. The warning message and the warning tone are cancelled.

ⓘ Active Emergency Stop Assist can initiate an emergency stop a maximum of three times within a driving cycle. After that, Active Steering Assist and Active Emergency Stop Assist are disabled until the vehicle has been restarted.

SYSTEM LIMITS

FOR THE DETECTION OF VEHICLES AND OTHER OBSTACLES, OBSERVE THE SYSTEM LIMITS OF THE FOLLOWING FUNCTIONS:

- Active Distance Assist DISTRONIC (⟶ page 409)
- Active Steering Assist (⟶ page 421)
- Active Lane Keeping Assist (⟶ page 434)
- Active Brake Assist (⟶ page 396)

ACTIVE EMERGENCY STOP ASSIST IS NOT ACTIVE IN THE FOLLOWING CASE:

- Active Lane Keeping Assist and Active Steering Assist are switched off.

Speed Limit Assist

FUNCTION OF SPEED LIMIT ASSIST

Speed Limit Assist records traffic signs with the multifunction camera and compares them with information from a digital street map in the multimedia system. It assists you by showing detected speed restrictions on the driver display. Speed restrictions further limited by an additional sign, e.g.in wet conditions, can also be detected and evaluated by the camera.

The system can issue a warning when you exceed the maximum permissible speed.

Speed Limit Assist only portrays selected signs on the driver display. Actual traffic signs and speed restrictions always take priority over the traffic signs and speed restrictions shown on the display.

NOTES ON TRAILER OPERATION

ⓘ Observe also the notes on trailer operation (⟶ page 461).

If a trailer or bicycle rack is connected correctly, the media display shows the query concerning the type of trailer and its respective maximum permissible speed (⟶ page 465).

It is the responsibility of the driver to manually adapt the maximum permissible speed in the respective small or large trailer – category –.

IN PARTICULAR, COUNTRY-SPECIFIC LAWS MUST BE TAKEN INTO ACCOUNT, E.G.REGARDING:

- maximum design speed or maximum permissible speed for which the vehicle is approved
- permissible gross mass with or without towing vehicle
- required number of years with a corresponding driving licence
- type and condition of the road being travelled
- the weather conditions

The maximum permissible speed adapted to the vehicle/trailer combination can be adopted in the manual or automatic speed transfer during the journey (depending on the respective equipment).

On the system side, relevant additional signs for speed restrictions and clear road category traffic rules can be considered for the vehicle/trailer combination (depending on the respective country of use).

No maximum permissible speed can be selected for a bicycle rack in the multimedia system. When using a bicycle rack, observe the specifications for the maximum permissible speed in the manufacturer's operating instructions.

THE FOLLOWING INFORMATION SHOULD ALSO BE OBSERVED:

- Select a speed adapted to the traffic, surroundings and weather conditions.
- Observe actual traffic signs.
- Observe applicable traffic rules and regulations.

Observe the information on driving systems and be aware of your personal responsibility, otherwise you may fail to recognise potential dangers (⟶ page 391).

NOTIFICATIONS ON THE DRIVER DISPLAY

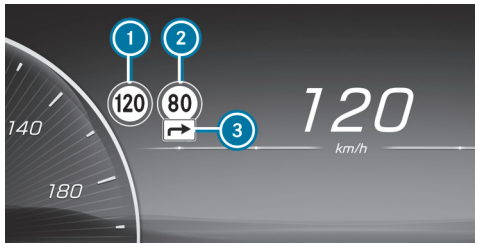

Example of display

1. Permissible speed
2. Permissible speed when there is a restriction
3. Additional sign with a restriction

The system can show up to two traffic signs on the driver display simultaneously. The system always prioritises displaying speed restrictions. If two speed signs are shown on the driver display, e.g.in the event of detected restrictions, the value of the left-hand speed restriction 1 is always conveyed to the limiter, cruise control or to Active Distance Assist DISTRONIC for adoption.

Important information from other systems can cause traffic signs to be hidden for a short time.

SPEED LIMIT ASSIST CAN DETECT AND DISPLAY THE FOLLOWING TRAFFIC SIGNS ①:

- speed restrictions
- end of the speed restriction
- play streets
- depending on the respective country of use: signs showing the start or end of motorways and dual carriageways

SPEED LIMIT ASSIST CAN DETECT THE FOLLOWING ADDITIONAL SIGNS ③ AND EVALUATE RELEVANCE OF THE RESTRICTIONS WHERE NECESSARY USING AUXILIARY VEHICLE SENSORS:

- in wet conditions
- slippery road surfaces
- in fog
- temporary restrictions
- exits
- restrictions for vehicle/trailer combinations

Speed Limit Assist also uses the data from a digital street map in the multimedia system. When you pass a town or city boundary or move from one road onto another, e.g.when joining or exiting a motorway, or when turning at a crossroads, the view on the driver display can thus also be updated without a traffic sign having been detected.

ⓘ Update the digital street map of the multimedia system regularly to ensure optimum functionality of Speed Limit Assist (→ page 42).

If Speed Limit Assist cannot determine the current maximum permissible speed, e.g.due to absent signage, the following display appears on the driver display:

Speed Limit Assist is not available in all countries. If the vehicle is located in a country in which Speed Limit Assist is not supported, this display is relayed permanently.

If Speed Limit Assist is temporarily or permanently unavailable due to a technical fault or soiling of the windscreen, a corresponding display message appears on the driver display and the Speed Limit Assist warning lamp lights up.

ⓘ Refer also to the information regarding display messages for Speed Limit Assist (→ page 764).

WARNING WHEN THE MAXIMUM PERMISSIBLE SPEED IS EXCEEDED

The system can warn you if you are about to exceed the detected maximum permissible speed. Depending on the respective country of use, you can set how much the maximum permissible speed may be exceeded in the multimedia system before a warning is issued. You can select in the settings whether the warning should be issued visually, with the traffic sign flashing on the driver display, or as a combination of visual and audible warning. Selection of the type of warning is confirmed via an indication on the driver display, depending on the respective country of use.

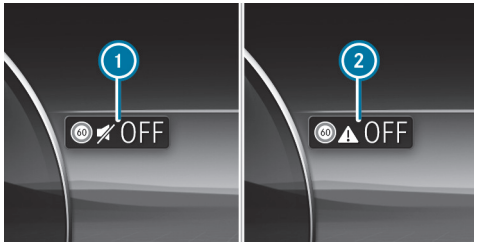

1 Visual warning only
2 Warning off

ⓘ The type, duration and deployment stages of the speed warning, as well as the option of setting the timing of the deployment stages upon which the warning is issued, are subject to legislation valid for the respective country in which the vehicle is delivered.

SYSTEM LIMITS

THE SYSTEM MAY BE IMPAIRED OR INOPERATIVE IN THE FOLLOWING SITUATIONS IN PARTICULAR:

- if visibility is poor, e.g.due to insufficient illumination of the road, highly variable shade conditions, rain, snow, fog, swirling dust or heavy spray
- if there is glare, e.g.from oncoming traffic, direct sunlight or reflections
- if there is dirt on the windscreen in the vicinity of the multifunction camera or if the camera is misted up, damaged or covered
- if the traffic signs are difficult to see because, forexample, they are dirty, obscured, faded, iced over, damaged, inconveniently positioned, insufficiently illuminated or askew
- active traffic signs with LED displays may not be detected correctly, or even at all due to technical factors, suchas transmission frequency
- if the information in the digital street map of the multimedia system is inaccurate or incomplete, or has not been updated
- if the signs, road markings or road layout are ambiguous, e.g.traffic signs at road works, at exits and slip roads, adjacent lanes or parallel roads, and pedestrian crossing markings at traffic lights
- if the signage or road markings are different to those encountered as standard
- if the signage, road markings or road guidance are country-specific and deviate from the navigation system's route guidance, e.g.at or after road works
- after sharp turns and in tight bends, when traffic signs are outside the camera's field of vision
- if you overtake vehicles with traffic signs which are affixed or attached to them
- if you use transport equipment secured to the vehicle with a trailer coupling, suchas a bicycle rack, restrictions for vehicle/trailer combinations may be deemed applicable
- if special restrictions as a vehicle/trailer combination apply for certain approval types which the system cannot determine or recognise
- in country-specific vehicle classes for which requirements for the maximum permissible speed have been modified

SETTING SPEED LIMIT ASSIST

Multimedia system:

Settings ▶▶ Assistance ▶▶ Assistance ▶▶ Speed Limit Assist

ACTIVATING OR DEACTIVATING THE SPEED WARNING

ⓘ The speed warning is switched on by default (depending on the respective country of use).

► Deactivate Speed limit warning.

Following country-specific legislation, the speed warning remains deactivated until the next time the vehicle is switched on or off.

AVAILABILITY OF THE FOLLOWING OPTIONS FOR SWITCHING THE ACOUSTIC SPEED WARNING ON AND OFF IS DEPENDENT UPON THE RESPECTIVE COUNTRY OF USE:

- Quick-access
- Holding the Mute button pressed on the steering wheel
- Pressing the speed icon in the status line on the media display
- Voice control command

CHANGING THE TYPE OF SPEED WARNING

► Change the warning to Visual or Visual & audible.

SWITCHING THE ACOUSTIC SIGNAL FOR A NEW MAXIMUM PERMISSIBLE SPEED ON OR OFF

ⓘ The acoustic signal for a new maximum permissible speed is switched off at the factory.

The function determines whether a subtle, non-intrusive sound supports each change of the displayed speed on the driver display.

► Activate or deactivate the function.

ⓘ Availability of the function is dependent on the respective country of use.

SETTING THE WARNING THRESHOLD

This value determines the speed at which a warning is issued when exceeded.

► Set the desired speed under Warning Threshold.

Availability of the function is subject to country-specific legislation.

IF ONE OF THE FOLLOWING SYSTEMS IS ACTIVATED, THE DETECTED SPEED CAN BE MANUALLY ADOPTED AS THE MAXIMUM PERMISSIBLE SPEED:

- Active Distance Assist DISTRONIC
- Cruise control
- Variable limiter

ⓘ Additional information on Active Distance Assist DISTRONIC (→ page 413).

Traffic Sign Assist

FUNCTION OF TRAFFIC SIGN ASSIST

Traffic Sign Assist records the traffic sign with the multifunction camera and compares it with information from a digital street map in the multimedia system. It assists you by showing detected speed restrictions and no-overtaking zones on the driver display.

The system can issue a warning when you exceed the maximum permissible speed.

In some countries, the system can provide you with further functions and can warn you when you are approaching pedestrian crossings. If the system detects that you are driving onto a section of road in the wrong direction of travel, it triggers a warning.

The camera also detects and evaluates traffic signs with a restriction indicated by an additional sign (e.g.in wet conditions).

Traffic Sign Assist portrays only selected signs on the driver display. Actual traffic signs and speed restrictions always take priority over the traffic signs and speed restrictions shown on the display.

NOTES ON TRAILER OPERATION

ⓘ Observe also the notes on trailer operation (⟶ page 461).

If a trailer or bicycle rack is connected correctly, the media display shows the query concerning the type of trailer and its respective maximum permissible speed (⟶ page 465).

It is the responsibility of the driver to manually adapt the maximum permissible speed in the respective small or large trailer – category –.

IN PARTICULAR, COUNTRY-SPECIFIC LAWS MUST BE TAKEN INTO ACCOUNT, E.G.REGARDING:

- maximum design speed or maximum permissible speed for which the vehicle is approved
- permissible gross mass with or without towing vehicle
- required number of years with a corresponding driving licence
- type and condition of the road being travelled
- the weather conditions

The maximum permissible speed adapted to the vehicle/trailer combination can be adopted in the manual or automatic speed transfer during the journey (depending on the respective equipment).

This system allows relevant additional signs for speed restrictions and clear road category traffic rules to be considered for the vehicle/trailer combination (depending on the respective country of use).

No maximum permissible speed can be selected for a bicycle rack in the multimedia system. When using a bicycle rack, observe the specifications for the maximum permissible speed in the manufacturer's operating instructions.

THE FOLLOWING INFORMATION SHOULD ALSO BE OBSERVED:

- Select a speed adapted to the traffic, surroundings and weather conditions.
- Observe actual traffic signs.
- Observe applicable traffic rules and regulations.

Observe the information on driving systems and be aware of your personal responsibility, otherwise you may fail to recognise potential dangers (⟶ page 391).

NOTIFICATIONS ON THE DRIVER DISPLAY

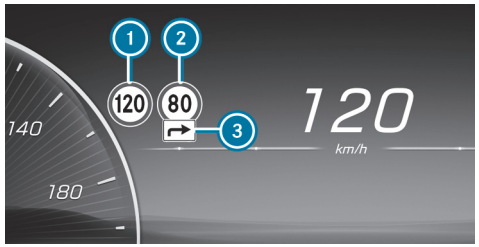

Example of display

1. Permissible speed
2. Permissible speed when there is a restriction
3. Additional sign with a restriction

The system can show up to two traffic signs on the driver display simultaneously. The system always prioritises displaying speed restrictions. If two speed signs are shown on the driver display, e.g.in the event of detected restrictions, the value of the speed restriction on the left ① is always conveyed to the limiter, cruise control or to Active Distance Assist DISTRONIC for adoption.

Important information from other systems can cause traffic signs to be hidden for a short time.

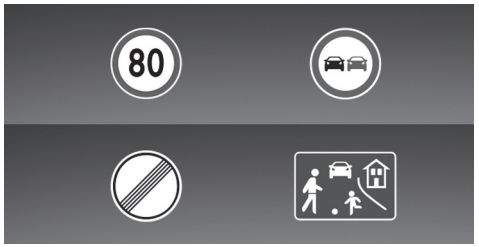

Examples of traffic signs which can be displayed

TRAFFIC SIGN ASSIST CAN DETECT AND DISPLAY THE FOLLOWING TRAFFIC SIGNS ①:

- speed restrictions
- end of the speed restriction
- overtaking restrictions
- play streets
- depending on the respective country of use: signs showing the start or end of motorways and dual carriageways

TRAFFIC SIGN ASSIST CAN DETECT THE FOLLOWING ADDITIONAL SIGNS ③ AND EVALUATE RELEVANCE OF THE RESTRICTIONS WHERE NECESSARY USING AUXILIARY VEHICLE SENSORS:

- in wet conditions
- slippery road surfaces
- in fog
- temporary restrictions
- exits
- restrictions for vehicle/trailer combinations

Traffic Sign Assist also uses the data from a digital street map in the multimedia system. When you pass a town or city boundary or move from one road onto another, e.g.when joining or exiting a motorway, or when turning at a crossroads, the view on the driver display can thus also be updated without a traffic sign having been detected.

ⓘ Update the digital street map of the multimedia system regularly to ensure optimum functionality of Traffic Sign Assist (⟶ page 42).

If Traffic Sign Assist can not determine the current maximum permissible speed, e.g.due to absent signage, the following notification appears on the driver display:

⊖

Traffic Sign Assist is not available in all countries. This display is shown permanently in the vehicle when travelling in countries which do not support Traffic Sign Assist.

If Traffic Sign Assist is temporarily or permanently unavailable due to a technical fault or soiling of the windscreen, a corresponding display message appears on the driver display and the Traffic Sign Assistant warning lamp lights up.

ⓘ Please also note the information pertaining to display messages for Traffic Sign Assist (→ page 764).

WARNING WHEN THE MAXIMUM PERMISSIBLE SPEED IS EXCEEDED

The system can warn you if you are about to exceed the detected maximum permissible speed. Depending on the respective country of use, you can set how much the maximum permissible speed may be exceeded in the multimedia system before a warning is issued. You can select in the settings whether the warning should be issued visually, with the traffic sign flashing on the driver display, or as a combination of visual and audible warning. Selection of the warning type is confirmed by way of notification on the driver display.

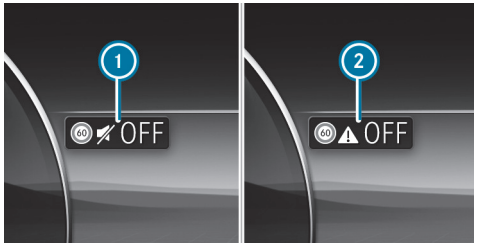

1 Visual warning only
2 Warning off

ⓘ The type, duration and deployment stages of the speed warning, as well as the option of setting the timing of the deployment stages upon which the warning is issued, are subject to legislation valid for the respective country in which the vehicle is delivered.

ADDITIONAL FUNCTIONS OF TRAFFIC SIGN ASSIST (COUNTRY-SPECIFIC)

Warning for no-entry signs: Traffic Sign Assist can warn you if you drive down a section of road in the wrong direction of travel, forexample, on motorway slip roads or one-way streets.

Warning at pedestrian crossings: when you approach pedestrian crossings and pedestrians are in the danger zone or are moving towards it, Traffic Sign Assist can warn you up to a travel speed of approximately 70 km/h.

SYSTEM LIMITS

THE SYSTEM MAY BE IMPAIRED OR INOPERATIVE IN THE FOLLOWING SITUATIONS IN PARTICULAR:

- if visibility is poor, e.g.due to insufficient illumination of the road, highly variable shade conditions, rain, snow, fog, swirling dust or heavy spray
- if there is glare, e.g.from oncoming traffic, direct sunlight or reflections
- if there is dirt on the windscreen in the vicinity of the multifunction camera or if the camera is misted up, damaged or covered
- if the traffic signs are difficult to see because, forexample, they are dirty, obscured, faded, iced over, damaged, inconveniently positioned, insufficiently illuminated or askew
- active traffic signs with LED displays may not be detected correctly, or even at all due to technical factors, suchas transmission frequency
- if the information in the digital street map of the multimedia system is inaccurate or incomplete, or has not been updated
- if the signs, road markings or road layout are ambiguous, e.g.traffic signs at road works, at exits and slip roads, adjacent lanes or parallel roads, and pedestrian crossing markings at traffic lights
- if the signage or road markings are different to those encountered as standard
- if the signage, road markings or road guidance are country-specific and deviate from the navigation system's route guidance, e.g.at or after road works

- after sharp turns and in tight bends, when traffic signs are outside the camera's field of vision
- if you overtake vehicles with traffic signs which are affixed or attached to them
- if you use transport equipment secured to the vehicle with a trailer coupling, suchas a bicycle rack, restrictions for vehicle/trailer combinations may be deemed applicable
- if special restrictions as a vehicle/trailer combination apply for certain approval types which the system cannot determine or recognise
- in country-specific vehicle classes for which requirements for the maximum permissible speed have been modified

SETTING TRAFFIC SIGN ASSIST

Multimedia system:

Settings ▶▶ Assistance ▶▶ Assistance ▶▶ Traffic Sign Assist

ACTIVATING OR DEACTIVATING THE SPEED WARNING

ⓘ The speed warning is switched on by default (depending on the respective country of use).

▶ Switch off Speed limit warning.

Following country-specific legislation, the speed warning remains deactivated until the next time the vehicle is switched on or off.

AVAILABILITY OF THE FOLLOWING OPTIONS FOR SWITCHING THE ACOUSTIC SPEED WARNING ON AND OFF IS DEPENDENT UPON THE RESPECTIVE COUNTRY OF USE:

- Quick-access
- Holding the Mute button pressed on the steering wheel
- Pressing the speed icon in the status line on the media display
- Voice control command

CHANGING THE TYPE OF SPEED WARNING

▶ Change the warning to Visual or Visual & audible.

SETTING THE WARNING THRESHOLD

This value determines the speed at which a warning is issued when exceeded.

▶ Set the desired speed under Warning Threshold.

ⓘ Availability of the function is subject to country-specific legislation.

SWITCHING THE ACOUSTIC SIGNAL FOR A NEW MAXIMUM PERMISSIBLE SPEED ON OR OFF

ⓘ The acoustic signal for a new maximum permissible speed is switched off at the factory.

The function determines whether a subtle, non-intrusive sound supports each change of the displayed speed on the driver display.

▶ Activate or deactivate the function.

ⓘ Availability of the function is dependent on the respective country of use.

Traffic light view

INFORMATION ABOUT THE TRAFFIC LIGHT VIEW
The traffic light view supports the driver when waiting in front of a red light by displaying the camera image on the media display. The camera image is displayed when the vehicle is at the front of the queue at a red light and faded out when the vehicle drives off.

Blind Spot Assist

FUNCTION OF BLIND SPOT ASSIST
Blind Spot Assist uses two lateral, rear-facing radar sensors to monitor the area up to 40 m behind and 3 m next to your vehicle.

If a vehicle is detected above speeds of approximately 12 km/h and this vehicle subsequently enters the monitored range directly next to your vehicle, the warning lamp in the outside mirror lights up red.

STATUS INDICATOR ON THE DRIVER DISPLAY

Grey: the system is activated but inoperative.

Green: the system is activated and operational.

If a vehicle is detected close to your vehicle and you switch on the turn signal indicator in the corresponding direction, a double warning tone sounds and the red warning lamp in the outside mirror flashes. If the turn signal indicator remains switched on, the double warning tone sounds once for every detected vehicle.

If you overtake a vehicle briskly, no warning is given.

WARNING
Risk of accident despite Blind Spot Assist

Blind Spot Assist does not react to either stationary objects or vehicles approaching and overtaking you at a greatly different speed.

Blind Spot Assist cannot warn drivers in these situations.

► Always pay careful attention to the traffic situation and maintain a safe distance at the side of the vehicle.

Observe the information on driving systems and be aware of your personal responsibility, otherwise you may fail to recognise potential dangers (→ page 391).

EXIT WARNING
The exit warning is an additional function of Blind Spot Assist and can warn vehicle occupants of any approaching vehicles when leaving the stopped vehicle.

WARNING
Risk of accident despite exit warning

The exit warning neither reacts to stationary objects nor to persons or road users approaching you at a greatly differing speed.

The exit warning cannot warn drivers in these situations.

► Always pay particular attention to the traffic situation when opening the doors and make sure there is sufficient clearance.

If a vehicle is detected in the monitoring range, the warning lamp in the outside mirror lights up. If a vehicle occupant opens the front door on the

side subject to a warning, a warning tone sounds and the warning lamp in the outside mirror starts to flash. An exit warning is not issued for the sliding doors.

This additional function is only available when Blind Spot Assist is switched on. The exit warning can warn you from switching on up to a maximum of three minutes after switching off the vehicle. The end of the availability of the exit warning function is indicated by three flashes of the warning lamp in the outside mirror.

The exit warning is only an aid and is no substitute for the attentiveness of the vehicle occupants. Responsibility always lies with the vehicle occupants when opening doors and leaving the vehicle.

SYSTEM LIMITS

BLIND SPOT ASSIST MAY IN PARTICULAR BE LIMITED IN THE FOLLOWING SITUATIONS:

- if the sensors are soiled or obscured
- if there is poor visibility, e.g. owing to fog, heavy rain, snow or spray
- if narrow vehicles are within the monitored range, e.g. bicycles
- if the road has very wide or very narrow lanes
- if vehicles are not driving in the middle of their lane

Warnings may be issued in error when driving close to crash barriers or similar solid lane borders. Always ensure that there is a sufficient distance at the side to other road users or obstacles.

Warnings may be interrupted when driving alongside long vehicles for an extended time, e.g. trucks.

Blind Spot Assist is not operational when reverse gear is engaged.

If transport equipment, e.g. a trailer or bicycle rack, is attached to the trailer hitch and the electrical connection has been correctly established, Blind Spot Assist and the exit warning are only available to a limited extent.

THE EXIT WARNING FUNCTION MAY BE LIMITED IN THE FOLLOWING SITUATIONS:

- when the sensor is blocked by adjacent vehicles in narrow parking spaces
- when people are approaching
- in the case of stationary or slow-moving objects

ACTIVATING/DEACTIVATING BLIND SPOT ASSIST

Multimedia system:

Settings ▶▶ Assistance ▶▶ Collision avoidance

▶ Select Blind Spot Assist.

▶ Activate or deactivate the function.

Active Lane Keeping Assist

FUNCTION OF ACTIVE LANE KEEPING ASSIST

Active Lane Keeping Assist monitors the area ahead of your vehicle with the multifunction camera (⟶ page 391) and can protect you from unintentionally leaving your lane. The system can guide you back into your lane with course-correcting steering interventions, and also warn you with tangible steering wheel feedback.

Active Lane Keeping Assist can act in a speed range from 60 km/h to 200 km/h, or depending on the country, up to 210 km/h.

THE SYSTEM CAN INTERVENE UNDER THE FOLLOWING CONDITIONS:

- Active Lane Keeping Assist detects a lane marking.

- A front wheel of your vehicle moves onto this lane marking.

If you activate the turn signal indicator, no steering intervention takes place on the relevant side.

If you leave your lane without activating the turn signal indicator, but the risk of collision with a moving obstacle in your own lane is detected, there is no steering intervention.

Vehicles with Blind Spot Assist or Driving Assistance Package: if the system detects an obstacle, e.g. another vehicle in the adjacent lane, steering intervention takes place despite the turn signal indicators.

DEPENDING ON THE COUNTRY, ACTIVE LANE KEEPING ASSIST CAN ALREADY REACT IN THE FOLLOWING SITUATIONS FROM A SPEED OF APPROXIMATELY 45 KM/H:

- If your own vehicle is overtaken by another road user and a risk of collision is detected, there is course-correcting steering intervention.
- If a recognised lane marking is crossed, a warning is given by tangible feedback from the steering wheel.

IN THE FOLLOWING CASES SYMBOL (1) APPEARS IN THE DRIVER DISPLAY AND A WARNING TONE IS SOUNDED:

- A steering intervention by Active Lane Keeping Assist lasts longer than approx. ten seconds.
- There are two or more steering interventions by the system within approx. three minutes, without steering intervention by the driver.

You can set the sensitivity of the system in the settings of Active Lane Keeping Assist to determine the level of support required. You can also determine whether the system is to react to interrupted or only to solid lane markings (→ page 436).

ACTIVE LANE KEEPING ASSIST STATUS DISPLAYS

White: Active Lane Keeping Assist is switched off.

If ESP® is switched off or a tyre pressure loss warning appears, Active Lane Keeping Assist is automatically switched off.

Yellow: there is a malfunction. Also observe any messages on the display.

Grey: Active Lane Keeping Assist is switched on but not ready.

Green: Active Lane Keeping Assist is switched on and ready.

Red: Active Lane Keeping Assist has guided you back into your lane with a course-correcting steering intervention. The status display flashes if there is also a tangible warning at the steering wheel. The lane marking on the relevant side is shown in red.

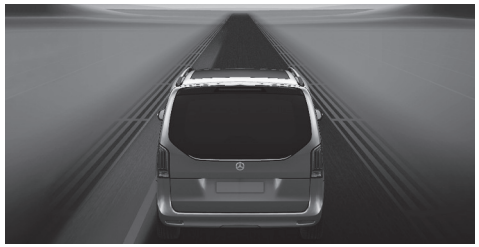

Indicator in the driver display in the Assistance menu

If a front wheel moves onto a detected lane marking, this is highlighted in red in the driver display in the Assistance menu.

SYSTEM LIMITS

IN THE FOLLOWING SITUATIONS THERE MAY BE NO COURSE-CORRECTING STEERING INTERVENTION, BUT POSSIBLY A TANGIBLE WARNING IN THE STEERING WHEEL:

- if you actively steer, brake or accelerate
- if a driving safety system intervenes, e.g. ESP® or Active Brake Assist
- if you have adopted a sporty driving style with high cornering speeds or high rates of acceleration
- if transport equipment, e.g. a trailer or bicycle rack, is attached to the trailer hitch and the electrical connection has been correctly established

THE SYSTEM MAY BE IMPAIRED OR INOPERATIVE IN THE FOLLOWING SITUATIONS IN PARTICULAR:

- If there is poor visibility, e.g. due to insufficient illumination of the road, highly variable light/shadow conditions, rain, snow, fog or heavy spray
- if there is glare, e.g. from oncoming traffic, direct sunlight or from reflections
- if there is dirt on the windscreen in the vicinity of the multifunction camera or if the camera is misted up, damaged or covered
- if the bumper is soiled in the area of the radar sensors, or if these are damaged or covered
- if there are no lane markings, or several unclear lane markings are present for one lane, e.g. around roadworks
- if the lane markings are worn away, dark or covered
- If the distance to the vehicle in front is too short and the lane markings cannot be detected
- if the lane markings change quickly, e.g. lanes branch off, cross one another or merge
- if the lanes are very narrow and winding

Observe the information on driving systems and be aware of your personal responsibility, otherwise you may fail to recognise potential dangers (→ page 391).

ACTIVATING/DEACTIVATING ACTIVE LANE KEEPING ASSIST

Multimedia system:

→ [⌂] ▸▸ Settings ▸▸ Assistance

▶ Select Collision avoidance.

▶ Activate or deactivate the function.

SETTING ACTIVE LANE KEEPING ASSIST

Multimedia system:

→ [⌂] ▸▸ Settings ▸▸ Assistance ▸▸ Collision avoidance ▸▸ Active Lane Keeping Assist

SETTING SENSITIVITY

▶ Select [⚙].

▶ Select Early, Med. or Late.

The most recently selected setting will be adopted the next time the vehicle is started.

ⓘ The standard setting for this function depends on the country.

ACTIVATING OR DEACTIVATING ASSISTANCE WITH BROKEN LANE MARKINGS

▶ Select Advanced support.

The most recently selected setting will be adopted the next time the vehicle is started.

ⓘ The standard setting for this function depends on the country.

Reversing camera

FUNCTION OF THE REVERSING CAMERA

The reversing camera serves solely as an aid. It is not a substitute for you having to pay attention to your surroundings. You are responsible for safe manoeuvring and parking at all times. Ensure that there are no persons, animals or objects etc. in the manoeuvring area while manoeuvring and parking.

ⓘ The area behind the vehicle is displayed as a mirror image, as it would appear in the inside mirror.

VEHICLES WITH PARKING PACKAGE

The following camera perspectives are available in the media display:

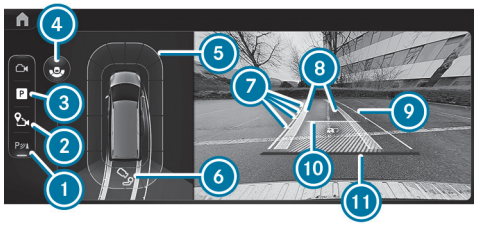

Camera views menu (standard view)

1. Activates/deactivates Parking Assist PARKTRONIC (⟶ page 448)
2. Sets the GPS activation point
3. Parking Assistance menu
4. Switches between wide-angle view and standard view for the reversing camera
5. Warning display of Parking Assist PARKTRONIC (⟶ page 445)
6. Switches between standard view and trailer view (depending on the respective equipment)
7. Guide lines at a distance of approximately 1.0 m, 1.5 m, 2.0 m and 3.0 m from the rear area
8. Path marking the course the wheels will take with the current steering angle (dynamic)
9. Driven surface depending on the current steering angle (dynamic)
10. Area required (shaded) with guide line to open the tailgate completely
11. Guide line at a distance of approximately 0.3 m from the rear area

ⓘ When Active Parking Assist is active, the paths 8 are displayed in green (⟶ page 448).

Wide-angle view (example)

1. Activates/deactivates Parking Assist PARKTRONIC (⟶ page 448)
4. Switches between wide-angle view and standard view for the reversing camera
5. Warning display of Parking Assist PARKTRONIC (⟶ page 445)

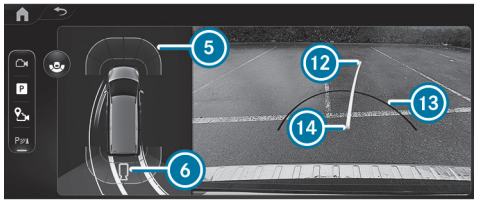

Trailer view (example)

- (5) Warning display of Parking Assist PARKTRONIC (⟶ page 445)
- (6) Switches between standard view and trailer view (depending on the respective equipment)
- (12) Yellow guide line, locating aid
- (13) Red guide line at a distance of approximately 0.3 m from the ball head of the trailer hitch
- (14) Ball head of the trailer hitch

SYSTEM LIMITS

If the system is not ready for operation, the System inoperative message appears on the media display.

If a camera perspective is selected and the media display is temporarily black or does not show a camera image, the camera system is also faulty or is not ready for operation.

> ⚠ **WARNING**
> Risk of accident due to functional limitations of the reversing camera
>
> Functional limitations of the reversing camera could lead to a risk of collision with persons or objects.
>
> ► Do not use the reversing camera if its functions are limited.
>
> ► Ensure that there are no persons, animals or objects etc., in the manoeuvring area while manoeuvring and parking.

THE REVERSING CAMERA WILL NOT FUNCTION, OR WILL ONLY PARTIALLY FUNCTION IN THE FOLLOWING SITUATIONS, FOR EXAMPLE:

- You are driving forwards at a speed greater than approximately 16 km/h.
- The tailgate is open.
- The rear window of the EASY-Pack tailgate is open.
- The weather conditions are poor, e.g.heavy rain, snow, fog, storm or spray.
- The light conditions are poor, e.g.at night or if a light is shining into the camera.
- If the camera lens is obstructed, dirty or misted up. Observe the notes on cleaning the reversing camera (⟶ page 653).
- If the camera or rear of your vehicle is damaged. In this event, have the camera, its position and its setting checked at a qualified specialist workshop.

The field of vision and additional functions of the camera system may be restricted due to auxiliary vehicle attachments, e.g.licence plate bracket or bicycle rack.

ⓘ The contrast of the display may be impaired by direct sunlight or by other light sources, e.g.when driving out of a garage. Particular attention should be afforded in these conditions.

ⓘ Have the display repaired or replaced if its use is considerably restricted due to pixel errors, forexample.

Observe also the information on vehicle sensors and cameras (→ page 391).

OPENING THE REVERSING CAMERA COVER

Multimedia system:

→ ⌂ ▸▸ Settings ▸▸ Vehicle ▸▸ Camera

▶ Select Open camera cover.

ⓘ The camera cover closes automatically after a while or when the vehicle is switched off with the cover open.

360° camera

FUNCTION OF THE 360° CAMERA

The 360° camera is a system comprising four cameras which cover the immediate vehicle surroundings. The cameras support you, forexample, when parking or when exits are difficult to see.

THE 360° CAMERA INCLUDES THE FOLLOWING CAMERAS AND EVALUATES THEIR IMAGES:

- Reversing camera
- Front camera
- Two outside mirror cameras

The cameras serve solely as aids and may show a distorted view of obstacles, show them incorrectly or even omit them altogether. They are not a substitute for you having to pay attention to your surroundings. You are responsible for safe manoeuvring and parking at all times. Ensure that there are no persons, animals or objects etc. in the manoeuvring area while manoeuvring and parking.

The following camera perspectives are available in the media display:

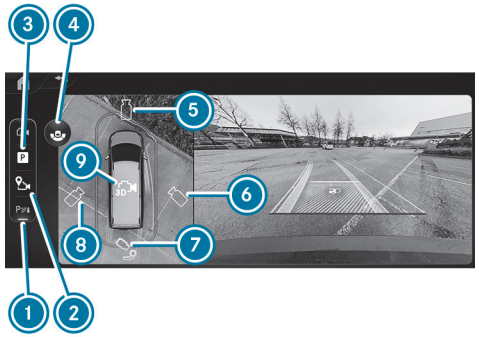

Overview of Camera views menu

1. Activates/deactivates Parking Assist PARKTRONIC (→ page 448)
2. Sets the GPS activation point
3. Parking Assistance menu
4. Switches between standard view and wide-angle view
5. Image from the front camera
6. 3D view right-hand side of vehicle
7. Switches between trailer view (depending on the respective equipment) and reversing camera

8 3D view left-hand side of vehicle
9 3D auto view

ⓘ The warning display of Parking Assist PARKTRONIC is shown in all views (⟶ page 445).

ⓘ Availability of the 3D auto view 9 and 3D view 6, 8 functions is dependent upon the respective equipment.

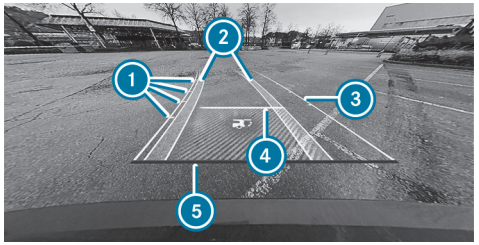

Function of the guide lines (example)

1 Guide lines at a distance of approximately 1.0 m, 1.5 m, 2.0 m and 3.0 m from the rear area
2 Path marking the course the wheels will take with the current steering angle (dynamic)
3 Driven surface depending on the current steering angle (dynamic)
4 Area required (shaded) with guide line to open the tailgate completely
5 Guide line at a distance of approximately 0.3 m from the rear area

ⓘ When Active Parking Assist is active, paths and guide lines are displayed in green instead of yellow (⟶ page 448).

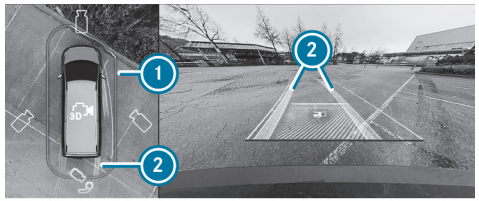

Image from the front camera or reversing camera (example)

1 Warning display of Parking Assist PARKTRONIC (⟶ page 445)
2 Path with the current steering angle

⚠ **WARNING**
Risk of accidents due to objects not being displayed or being displayed as heavily distorted

Due to the projection of the cameras, objects in the 3D views may be heavily distorted or not displayed at all.

► Ensure that there are no persons, animals or objects in the manoeuvring area while manoeuvring and parking.

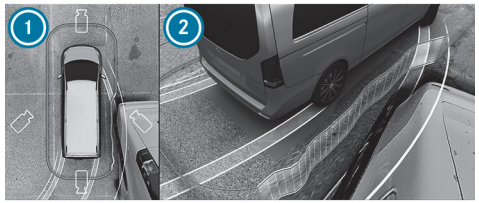

3D view left/right-hand side of the vehicle (example)

1 Top view with warning display of Parking Assist PARKTRONIC
2 Side view of the outside mirror cameras

In the 3D view, left/right-hand side of the vehicle, the virtual camera moves to the respective side of the vehicle ②. When you change the transmission position, the view is automatically adapted. In addition, the top view ① is displayed with the Parking Assist PARKTRONIC warning display.

ⓘ The area behind the vehicle is **not** displayed as a mirror image, as is usual in the 3D views.

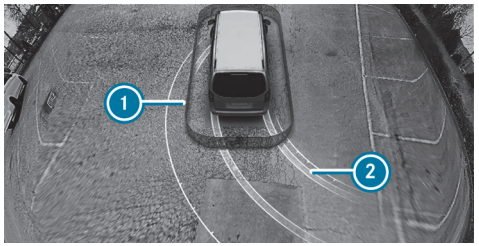

3D auto view (example)

① Warning display of Parking Assist PARKTRONIC (⟶ page 445)
② Guide lines

In the 3D auto view, the virtual camera moves to the standard perspective, facing forward from the rear above the roof.

If you touch the touchscreen, the view changes to a 3D view with free rotation. You can turn, tilt and zoom the perspective by touch.

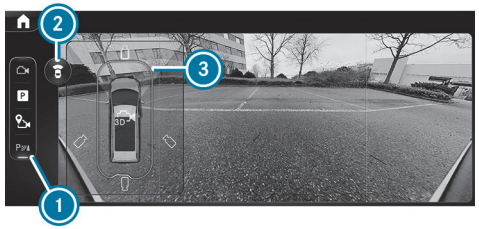

Wide-angle view (example)

① Activates/deactivates Parking Assist PARKTRONIC
② Switches between standard view and wide-angle view
③ Warning display of Parking Assist PARKTRONIC (⟶ page 445)

If the top view with the reversing camera image is displayed, switch to the wide angle view with the icon ② indented to the left. When the wide-angle view is displayed, switch back to the respective top view.

If you select the trailer view and no trailer is coupled to the vehicle, the following display appears:

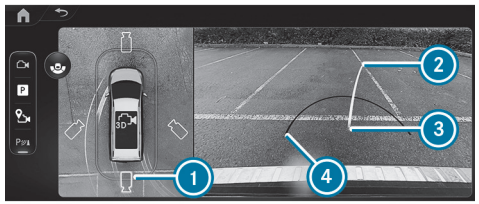

Trailer view (example)

① Switches between standard view and trailer view
② Yellow guide line, locating aid
③ Ball head of the trailer hitch
④ Red guide line at a distance of approximately 0.3 m from the ball head of the trailer hitch

ⓘ In trailer mode, the guide lines are shown at the level of the trailer hitch.

When the electrical connection is established between vehicle and trailer, the display changes to the side camera view.

Side view of outside mirror cameras in the trailer view (example)

① Switches between standard view and trailer view

SYSTEM LIMITS

If the system is not ready for operation, the System inoperative message appears on the media display.

⚠ **WARNING**
Risk of accident due to functional limitations of the 360° camera

If the function of the 360° camera is restricted, there is a risk of collision with persons or objects.

- ▶ Do not use the 360° camera in case of functional limitations.
- ▶ Ensure that there are no persons, animals or objects etc., in the manoeuvring area while manoeuvring and parking.

THE 360° CAMERA WILL NOT FUNCTION, OR WILL ONLY PARTIALLY FUNCTION IN THE FOLLOWING SITUATIONS:

- You are driving forwards at a speed greater than approximately 16 km/h.
- An outside mirror is not completely extended.
- The doors are open.
- The tailgate is open.
- The rear window of the EASY-Pack tailgate is open.
- The weather conditions are poor, e.g.heavy rain, snow, fog, storm or spray.
- The light conditions are poor, e.g.at night or if a light is shining into the camera.
- If the camera lens is obstructed, dirty or misted up. Refer to the notes on cleaning the 360° camera (⟶ page 653).
- If cameras or vehicle components in which the cameras are fitted are damaged. In this event, have the cameras, their position and their setting checked at a qualified specialist workshop.

For technical reasons, the standard height of the vehicle may be altered if the vehicle is carrying a heavy load and this can result in inaccuracies in the guide lines and in the display of generated images.

The field of vision and additional functions of the camera system may be restricted due to auxiliary vehicle attachments, e.g.licence plate bracket or bicycle rack.

ⓘ The display contrast may be impaired by sudden, incidental sunlight or other light sources, e.g.when driving out of a garage. Particular attention should be afforded in these conditions.

ⓘ Have the display repaired or replaced if its use is considerably restricted due to pixel errors, forexample.

If you change wheel size on your vehicle, ensure that it is assigned to the correct wheel size group (→ page 699). If the assignment changes without recoding the control units in the vehicle, the 360° camera cannot calibrate properly. The guide lines at road level or at the level of the trailer coupling will then not be displayed correctly.

Observe also the information on vehicle sensors and cameras (→ page 391).

FUNCTION OF THE OFFROAD CAMERA

The offroad camera provides support with various views when driving over rough terrain.

THE FOLLOWING VIEWS ARE AVAILABLE:

- Transparent bonnet
- Front view
- Rear view

Call up the offroad camera in the offroad menu of the multimedia system (→ page 538).

TRANSPARENT BONNET

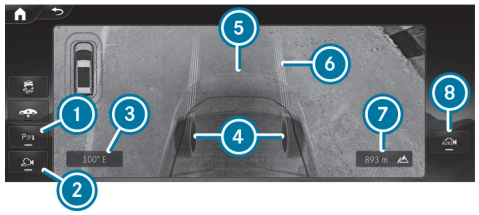

View of the transparent bonnet (example)

1. Activates/deactivates Parking Assist PARKTRONIC (→ page 445)
2. Switches the offroad camera on or off
3. Cardinal point
4. Position of the wheels
5. Area under the bonnet
6. Path with the current steering angle
7. Altitude above sea level
8. Activates/deactivates automatic, speed-dependent switching between the transparent bonnet view and the front view

If the offroad menu is open in the central display and the button 2 is switched on, the transparent bonnet view is automatically displayed in the transmission position D. This shows a virtual image of the area directly in front of the bumper, in front of the wheels and under the bonnet at speeds below approx. 6 km/h to 8 km/h. Additionally, the current travel path is displayed. The transparent bonnet view provides support when driving over difficult terrain, e.g.on rocky or uneven ground.

The front camera captures and records the shaded area under the bonnet 5. This area is then shown as soon as it has been traversed by the vehicle. If the vehicle has not been moved for some time, the recorded area is displayed in greyscale and faded out.

NOTE
Damage caused by obstacles which were not indicated

The transparent bonnet view is generated from images recorded previously by the 360° camera.

These recorded images may therefore possibly deviate from the actual conditions. In the meantime, moving objects may have found their way underneath the vehicle which are not showing up in the current display.

- Avoid any obstacles or navigate them with extreme caution.
- Adapt the travel speed to the respective conditions.

FRONT AND REAR VIEW

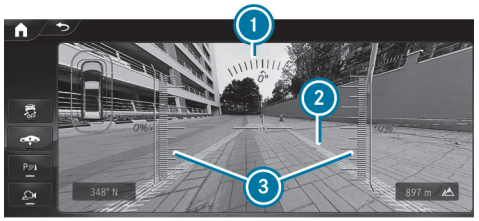

Image of front and rear view (example)

1. Downhill gradient indicator
2. Path with the current steering angle
3. Uphill gradient indicator

Please note that in the front view, the area up to approximately 1 m in front of the vehicle is not displayed.

The downhill gradient and uphill gradient displays are only shown in the front view.

If the vehicle is travelling faster than approximately 8 km/h the view automatically changes from transparent bonnet to front view. If the vehicle is travelling faster than approx. 20 km/h - 30 km/h, the camera image will be turned off.

If reverse gear is engaged, the rear view is automatically shown with the image of the reversing camera.

SYSTEM LIMITS

THE AREA UNDER THE BONNET IS NOT DISPLAYED CORRECTLY IN THE FOLLOWING SITUATIONS:

- in the rain
- when driving in the dark
- when shadows fall on the area recorded by the camera

Observe the instructions on the 360° camera's function and its system limits. You may otherwise fail to recognise potential dangers (→ page 439).

CALLING UP THE 360° CAMERA VIEWS USING THE BUTTON

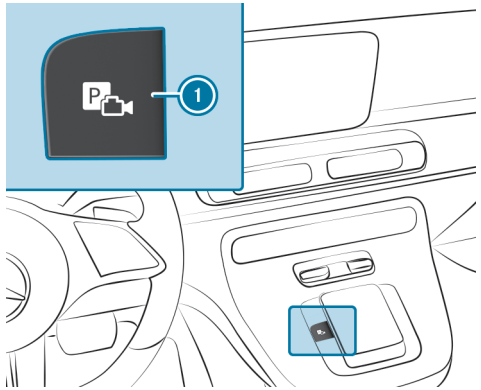

- Press the button 1.

  Depending on the respective vehicle equipment, a 3D-view camera perspective or the parking space search function is shown in the media display.

- Select the desired view in the multimedia system (→ page 439).

OPENING THE CAMERA COVER

Multimedia system:

→ Settings ▸▸ Assistance ▸▸ Camera

- Select Open camera cover.

> ⓘ The camera cover closes automatically after some time, or after the vehicle is switched on or off.

Parking Assist PARKTRONIC

FUNCTION OF PARKING ASSIST PARKTRONIC

Parking Assist PARKTRONIC is an electronic parking assistance system which monitors the area surrounding your vehicle. The distance between your vehicle and a detected obstacle is displayed visually and audibly.

The passive side impact protection also warns you of obstacles to the side. These must be detected beforehand by the sensors in the front or rear bumper while driving by them. If you steer in the direction of a detected obstacle and there is a risk of lateral collision, a warning is issued.

Passive side impact protection can be activated and deactivated via the multimedia system (→ page 448).

In order that front or rear obstacles to the side can be displayed, the vehicle must first travel a distance of at least half a vehicle length. Once the vehicle has travelled a distance of one vehicle length, obstacles on all sides can be shown.

Parking Assist PARKTRONIC serves solely as an aid. It is not a substitute for you having to pay attention to your surroundings. The responsibility for safe manoeuvring, parking and exiting parking spaces remains with you. Ensure that there are no persons, animals or objects etc. in the manoeuvring area while manoeuvring and parking in/exiting parking spaces.

INDICATIONS IN THE MEDIA DISPLAY

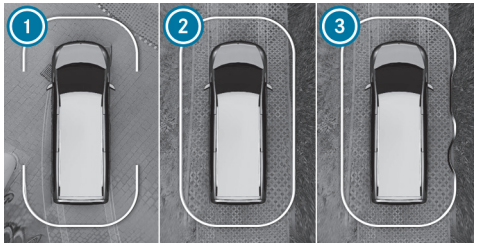

Example: vehicles with 360° camera

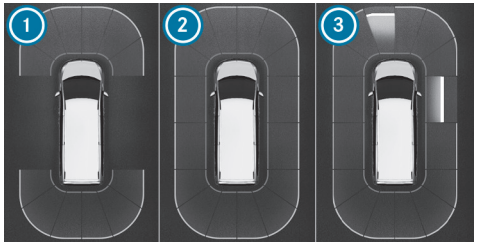

Example: vehicles with reversing camera

1. Ready for display at the front and rear
2. Ready for display all around
3. Ready for display all around and obstacles detected

As soon as Parking Assist PARKTRONIC is ready for display, the respective areas 1 to 3 of the display are shown in blue.

THE COLOUR OF THE DISPLAY CHANGES DEPENDING ON THE DISTANCE TO THE DETECTED OBSTACLE:

- **Blue:** > 1 m (no obstacles detected)
- **Yellow:** approximately 1 m - 0.7 m
- **Orange:** approximately 0.7 m - 0.4 m
- **Red:** < 0.4 m

Vehicles with 360° camera: the boundary line shifts dynamically depending on the position and distance of the obstacles detected.

An intermittent warning tone also sounds depending on the distance to the obstacle detected. You can set the timing of the warnings in the multimedia system. In the Warn early setting, the system warns you from a distance of 1 m. In the standard setting, from a shorter distance of 0.4 m.

Example: vehicles with 360° camera

Example: vehicles with reversing camera

IF YOU ARE NOT IN THE CAMERA & PARKING MENU AND AN OBSTACLE IN THE VEHICLE PATH IS DETECTED, A POP-UP WINDOW 1 APPEARS ON THE MEDIA DISPLAY IF THE FOLLOWING REQUIREMENTS ARE MET:

- **Vehicles without Active Parking Assist:** when driving no faster than 12 km/h.

- **Vehicles with Active Parking Assist:** when driving no faster than 18 km/h.

SYSTEM LIMITS

PARKING ASSIST PARKTRONIC DOES NOT NECESSARILY TAKE INTO ACCOUNT THE FOLLOWING OBSTACLES:

- Obstacles below the detection range, e.g. persons, animals or objects.
- Obstacles above the detection range, e.g. protruding loads, overhangs or loading ramps of lorries.
- Pedestrians or animals approaching the vehicle from the side.
- Objects placed next to the vehicle.

OBSTACLES ON THE SIDES ARE NOT SHOWN IN THE FOLLOWING SITUATIONS, FOR EXAMPLE:

- You park the vehicle and switch it off.
- You open the doors.

After the vehicle is restarted, obstacles must be detected again by driving past them before a new warning can be issued.

OBSERVE ALSO THE SYSTEM LIMITS OF THE FOLLOWING SYSTEMS:

- Reversing camera (→ page 437)
- 360° camera (→ page 439)

Observe the information on vehicle sensors and cameras, otherwise the system cannot function properly (→ page 391).

Vehicles with trailer hitch: if a transport device, e.g. trailer or bicycle rack is attached to the trailer hitch and the electrical connection is correctly established, Parking Assist PARKTRONIC is deactivated for the rear zone.

PROBLEMS WITH PARKING ASSIST PARKTRONIC

If the Parking Assist PARKTRONIC display lights up red for approximately three seconds and then goes out, and the P OFF symbol appears on the driver display, the system may have been deactivated due to signal interference. Start the vehicle again and check whether Parking Assist PARKTRONIC works in a different location.

IF A WARNING TONE ALSO SOUNDS, THIS MAY BE DUE TO THE FOLLOWING:

- **The sensors are dirty:** clean the sensors (→ page 653).
- **Licence plates or other detachable parts in the vicinity of the sensors are not correctly fastened:** check the licence plate or the detachable parts to ensure that they are securely fixed.
- **Parking Assist PARKTRONIC has been deactivated due to a malfunction:** restart the vehicle. If the problem persists, consult a qualified specialist workshop.

DEACTIVATING/ACTIVATING PARKING ASSIST PARKTRONIC

NOTE
Vehicle damage when parking or manoeuvring due to nearby objects

Parking Assist PARKTRONIC may not detect certain objects in the close-up range.

- When parking or manoeuvring, pay particular attention to objects that are under or above the sensors, e.g. flower pots or drawbars. The vehicle or other objects may otherwise be damaged.

Ensure that there are no persons, animals or objects etc. in the manoeuvring area while manoeuvring and parking in/exiting parking spaces.

Multimedia system:

Settings ▸▸ Quick-access

- Select PARKTRONIC On.

  This function is activated or deactivated according to the previous setting.

ⓘ Parking Assist PARKTRONIC is automatically activated upon vehicle start.

SETTING THE WARNING TONES OF PARKING ASSIST PARKTRONIC

Multimedia system:

Settings ▸▸ Assistance ▸▸ Parking ▸▸ PARKTRONIC

SETTING WARNING TONES

- Select Set warning tones.
- Set the desired level under Volume or Tone pitch.

ACTIVATING/DEACTIVATING AUDIO FADEOUT

- Select Audio fadeout and activate or deactivate Audio fade for warnings.

SETTING WARNING TIMING

- Select Time of warning.
- Set the desired warning time for Front or Rear.
- Activate or deactivate Side warning.

Active Parking Assist

FUNCTION OF ACTIVE PARKING ASSIST

Active Parking Assist is an electronic parking assistance system which uses ultrasound with the assistance of the reversing camera or 360° camera. When you are driving forwards up to approximately 35 km/h, the system automatically measures parking spaces on both sides of the vehicle.

Active Parking Assist serves solely as an aid. It is not a substitute for you having to pay attention to your surroundings. The responsibility for safe manoeuvring, parking and exiting parking spaces remains with you at all times. Ensure that no persons, animals, objects, etc. are in the vehicle path.

Active Parking Assist offers the following functions:

VEHICLES WITH REVERSING CAMERA

- Parking in parking spaces parallel to the roadway
- Reversing into parking spaces perpendicular to the roadway

The parking space is freely selectable. The parking procedure is executed with the vehicle reversing.

VEHICLES WITH 360° CAMERA

- Parking in parking spaces parallel to the roadway
- Parking in parking spaces perpendicular to the roadway (either forwards or reversing as desired)
- Parking in parking spaces that can only be detected as such from markings (forexample at the roadside)
- Exiting parking spaces if you have parked using Active Parking Assist

The parking space is freely selectable. The parking direction (forwards or reversing) can also be freely selected, depending on the orientation of the parking space.

If Active Parking Assist is available, the notification [P] appears on the driver display. When the system detects parking spaces, the notification [P] appears. The arrows show the side of the roadway on which free parking spaces are located. These are then shown on the media display.

When Active Parking Assist is activated, the turn signal indicators are activated based on the calculated path of your vehicle. The parking and unparking procedures are assisted by acceleration, braking, steering and gear changes.

The driver must have their seat belt fastened before they can initiate the parking procedure.

To start the parking procedure, press the button [P] (→ page 450).

ACTIVE PARKING ASSIST WILL BE CANCELLED IN THE FOLLOWING SITUATIONS:

- You press the button [P] again.
- You begin steering.
- You select park position [P].
- You apply the parking brake.
- You unfasten the seat belt.
- ESP® intervenes.
- One of the doors or the tailgate is open for longer than five minutes.

PARKTRONIC is deactivated for the rear zone when you couple a trailer and establish an electrical connection between your vehicle and the trailer. Active Parking Assist is then no longer available.

SYSTEM LIMITS
If the exterior lighting is malfunctioning, Active Parking Assist is not available.

OBSERVE ALSO THE SYSTEM LIMITS OF THE FOLLOWING SYSTEMS:

- Reversing camera (→ page 437)
- 360° camera (→ page 439)

Objects above or below the detection range of Active Parking Assist, e.g.protruding loads, overhangs or loading ramps of trucks or parking space boundaries are not detected when measuring the parking space. These are also not subsequently taken into account when calculating the parking procedure. In some circumstances, Active Parking Assist may guide you into the parking space prematurely or brake too late.

Certain environmental conditions, suchas snowfall or heavy rain, may lead to a parking space being mismeasured. Parking spaces that are partially occupied by trailer drawbars might not be identified as such or may be measured incorrectly. Only use Active Parking Assist on level road surfaces with adequate grip.

WARNING
Risk of accident due to objects located above or below the detection range of Active Parking Assist

IF THERE ARE OBJECTS ABOVE OR BELOW THE DETECTION RANGE, THE FOLLOWING SITUATIONS MAY ARISE:

- Active Parking Assist may steer too early.
- The vehicle may not stop in front of these objects.

There is a danger of collision!

► In these situations, do not use Active Parking Assist.

WARNING
Risk of accident due to vehicle swinging out while parking or pulling out of a parking space

While parking or pulling out of a parking space, the vehicle swings out and can drive onto areas of the oncoming lane.

This could cause you to collide with objects or other road users.

► Pay attention to objects and other road users.

► Where necessary, stop the vehicle or cancel the parking procedure with Parking Pilot.

Active Parking Assist can also display unsuitable parking spaces, e.g.parking spaces in which parking is not permitted or on unsuitable surfaces.

DO NOT USE ACTIVE PARKING ASSIST IN THE FOLLOWING SITUATIONS, FOR EXAMPLE:

- in extreme weather conditions suchas ice, packed snow or in heavy rain
- when transporting a load that protrudes beyond the vehicle
- for parking spaces which are not on the same level as the road, forexample on pavements
- on steep inclines of more than approximately 15%.
- when snow chains are fitted
- if a trailer or bicycle rack is attached
- directly after a tyre change or when spare tyres are fitted.
- if the tyre pressure is too low or too high.

PARKING WITH ACTIVE PARKING ASSIST

WARNING
Risk of accident due to objects located above or below the detection range of Active Parking Assist

IF THERE ARE OBJECTS ABOVE OR BELOW THE DETECTION RANGE, THE FOLLOWING SITUATIONS MAY ARISE:

- Active Parking Assist may steer too early.
- The vehicle may not stop in front of these objects.

There is a danger of collision!

► In these situations, do not use Active Parking Assist.

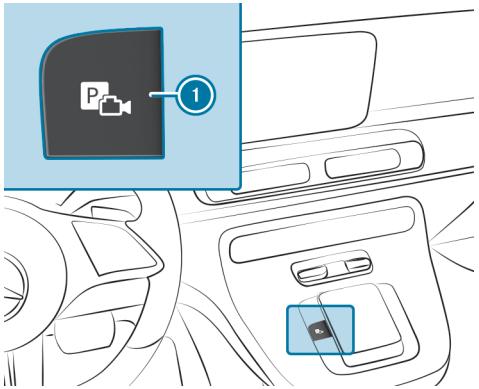

► Press the button ①.

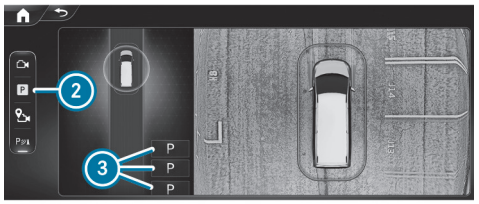

Parking Assistance menu (example for left-hand side of the screen)

► Select the Parking Assistance ② menu.

The parking spaces ③ detected by the system are shown on the media display.

At speeds greater than approximately 16 km/h, the camera perspective on the right-hand side of the screen switches off.

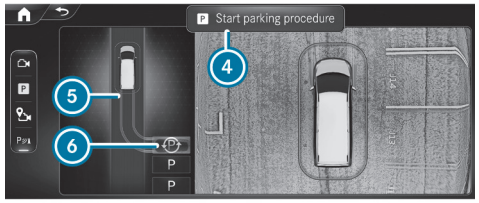

Parking Assistance menu (example)

When the vehicle is at a standstill, the indicated vehicle path ⑤ into the currently selected parking space ⑥ also appears.

► If a parking space is displayed: stop the vehicle.

► If necessary, select another parking space.

► **Vehicles with 360° camera:** to change the parking direction, tap the selected parking space again.

► **To start the parking procedure:** press the button ① again.

or

► Depress the brake pedal and select Start parking procedure ④.

► Take your hands off the steering wheel.

The vehicle drives into the selected parking space.

The duration of the parking procedure is indicated by a progress bar. The turn signal indicator is switched on automatically when the parking procedure begins. You are responsible for selecting the turn signal indicator in accordance with the traffic conditions. If necessary, select the turn signal indicator accordingly.

WARNING
Risk of accident due to vehicle swinging out while parking or pulling out of a parking space

While parking or exiting a parking space, the vehicle swings out and can drive onto areas of the oncoming lane.

This could cause you to collide with objects or other road users.

- Pay attention to objects and other road users.
- Where necessary, stop the vehicle or cancel the parking procedure with Active Parking Assist.

Upon completion of the parking procedure, the Active Parking Assist finished message appears.

- Secure the vehicle against rolling backwards or forwards. When necessitated by legal requirements or local conditions: turn the wheels towards the kerb.

ⓘ You can stop the vehicle and change the transmission position during the parking procedure. The system then calculates a new vehicle path. If no new vehicle path is available, the transmission position can be changed again, or the process can be cancelled.

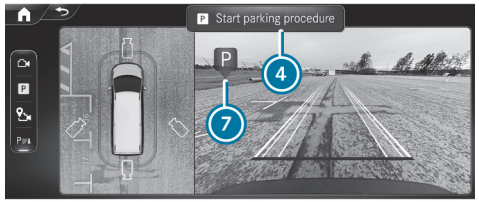

Immediate parking via the Camera views menu

- Select the Camera views menu.
- When the vehicle is stationary and in transmission position R, and the symbol 7 appears in the camera image: press the button 1 again.

or

- Depress the brake pedal and select Start parking procedure 4.
  The parking procedure is initiated for the detected parking space.

ⓘ The parking space and parking direction cannot be changed in immediate parking.

EXITING A PARKING SPACE WITH ACTIVE PARKING ASSIST

WARNING
Risk of accident due to objects located above or below the detection range of Active Parking Assist

IF THERE ARE OBJECTS ABOVE OR BELOW THE DETECTION RANGE, THE FOLLOWING SITUATIONS MAY ARISE:

- Active Parking Assist may steer too early.
- The vehicle may not stop in front of these objects.

There is a danger of collision!

► In these situations, do not use Active Parking Assist.

Requirements

- The vehicle has been parked with Active Parking Assist.

► Start the vehicle.

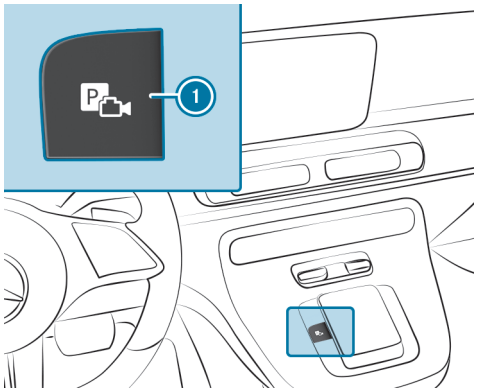

► Press the button 1.

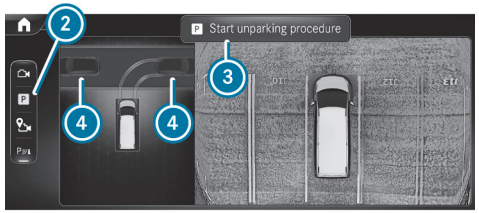

Parking Assistance menu (example for left-hand side of the screen)

► Select the Parking Assistance 2 menu.

► If necessary, change the direction of exit 4.

► **To start the unparking procedure:** press the button 1 again.

or

► Depress the brake pedal and select Start unparking procedure 3 (depending on the respective vehicle equipment).

► If necessary, change the transmission position. Observe any messages displayed on the driver display and media display.

The vehicle moves out of the parking space.

The turn signal indicator is automatically switched on when the unparking procedure is initiated, and automatically switched off again when it is completed. You are responsible for selecting the turn signal indicator in accordance with the traffic conditions. If necessary, select the turn signal indicator accordingly.

WARNING
Risk of accident due to vehicle swinging out while parking or pulling out of a parking space

While parking or exiting a parking space, the vehicle swings out and can drive onto areas of the oncoming lane.

This could cause you to collide with objects or other road users.

- Pay attention to objects and other road users.
- Where necessary, stop the vehicle or cancel the parking procedure with Active Parking Assist.

After the parking space has been exited, a warning tone and the Active Parking Assist finished, take control of vehicle message prompt you to take control of the vehicle. You have to accelerate, brake, steer and change gear yourself again.

If you do not react to the prompt to take control of the vehicle, the system will brake the vehicle to a standstill.

PAUSING ACTIVE PARKING ASSIST

WARNING
Risk of accident due to objects located above or below the detection range of Active Parking Assist

IF THERE ARE OBJECTS ABOVE OR BELOW THE DETECTION RANGE, THE FOLLOWING SITUATIONS MAY ARISE:

- Active Parking Assist may steer too early.
- The vehicle may not stop in front of these objects.

There is a danger of collision!

- In these situations, do not use Active Parking Assist.

You can interrupt the parking or unparking procedure of Active Parking Assist by performing one of the following actions, forexample:

- Depress the brake pedal.
- Open the front passenger door, a sliding door, the tailgate or the bonnet.
- Activate the parking brake or the HOLD function.
- **To resume the parking or unparking procedure:** gently depress the accelerator pedal.

If the electric parking brake was applied before Active Parking Assist was activated, depress the accelerator pedal lightly to start the parking or unparking procedure.

Check the area around your vehicle again before resuming a paused parking procedure. Ensure that persons, animals or objects are no longer in the manoeuvring range. Observe also the system limits of Active Parking Assist.

AUTOMATIC BRAKING FUNCTION OF ACTIVE PARKING ASSIST

> ⚠ **WARNING**
> Risk of accident due to objects located above or below the detection range of Active Parking Assist
>
> **IF THERE ARE OBJECTS ABOVE OR BELOW THE DETECTION RANGE, THE FOLLOWING SITUATIONS MAY ARISE:**
>
> - Active Parking Assist may steer too early.
> - The vehicle may not stop in front of these objects.
>
> There is a danger of collision!
>
> ► In these situations, do not use Active Parking Assist.

Persons or objects detected in the manoeuvring range could cause the vehicle to brake sharply and interrupt the parking or unparking procedure. The vehicle will then remain at a standstill. The parking or unparking procedure is resumed when you depress the accelerator pedal.

Check the area around your vehicle again before resuming the parking or unparking procedure. Ensure that persons, animals or objects are no longer in the manoeuvring range. Observe also the system limits of Active Parking Assist.

Manoeuvring assistant

DRIVE AWAY ASSIST FUNCTION

Drive Away Assist can reduce the severity of an impact when pulling away. If an obstacle is detected in the direction of travel, the vehicle's speed is briefly reduced to approximately 2 km/h. The symbol appears in the media display if a critical situation is detected.

> ⓘ You can cancel an intervention by Drive Away Assist at any time by deactivating Parking Assist PARKTRONIC.

> ⚠ **WARNING**
> Risk of accident caused by limited detection performance of Drive Away Assist
>
> Drive Away Assist cannot always clearly identify objects and traffic situations.
>
> ► Always pay careful attention to the traffic situation; do not rely on Drive Away Assist alone.
>
> ► Be prepared to brake or swerve as necessary, provided the traffic situation permits and that it is safe to take evasive action.

Drive Away Assist serves solely as an aid. It is not a substitute for you having to pay attention to your surroundings. The responsibility for safe manoeuvring and parking remains with you. Ensure that no persons, animals, objects, etc. are in the manoeuvring range.

A RISK OF A COLLISION MAY ARISE IN THE FOLLOWING SITUATIONS, FOREXAMPLE:

- Accelerator pedal or brake pedal is inadvertently actuated in place of the other.
- If an incorrect transmission position is engaged.

THE DRIVE AWAY ASSIST FUNCTION IS ACTIVE UNDER THE FOLLOWING CONDITIONS:

- If Parking Assist PARKTRONIC is activated.
- If you shift the transmission position to R or D when the vehicle is at a standstill.
- If the detected obstacle is less than approximately 1.0 m away.

SYSTEM LIMITS
The performance of Drive Away Assist is limited on inclines.

If a transport device, e.g. trailer or bicycle rack, is attached to the trailer hitch and the electrical connection is correctly established, Drive Away Assist is not available.

ⓘ Observe also the system limits of Parking Assist PARKTRONIC (⟶ page 445).

FUNCTION OF REAR CROSS TRAFFIC ALERT

ⓘ The Rear Cross Traffic Alert function is only available for vehicles with Blind Spot Assist.

The Rear Cross Traffic Alert function can warn drivers of any crossing traffic when reversing and manoeuvring out of a parking space. The radar sensors in the bumper also monitor the area adjacent to the vehicle. If a vehicle is detected, the warning lamp in the outside mirror on the corresponding side lights up red. If a critical situation is detected, a warning tone also sounds.

Vehicles with Parking Assist PARKTRONIC: if a critical situation is detected, the symbol also appears on the media display and the vehicle can be braked automatically. In this case, a warning tone sounds.

If the radar sensors are obscured by vehicles or other objects, detection is not possible.

THE REAR CROSS TRAFFIC ALERT FUNCTION IS ACTIVE UNDER THE FOLLOWING CONDITIONS:

- Blind Spot Assist is activated (⟶ page 434).
- The rear cross traffic warning is switched on (⟶ page 457).
- If the vehicle is reversing at walking pace.

ⓘ Observe also the instructions on Blind Spot Assist (⟶ page 433).

SYSTEM LIMITS
The Rear Cross Traffic Alert function is not available on uphill gradients.

If a transport device, suchas a trailer or bicycle rack, is attached to the trailer hitch and the electrical connection is correctly established, the Rear Cross Traffic Alert function is not available.

FUNCTION OF CLOSE-RANGE BRAKING
Close-range braking can prevent collisions with pedestrians when the vehicle is reversing at slow speeds. If the reversing camera detects a person in the vehicle's path, the vehicle can be braked to a standstill.

CLOSE-RANGE BRAKING CAN INTERVENE UNDER THE FOLLOWING CONDITIONS:

- The vehicle is reversing at a speed slower than 10 km/h.
- The camera image is shown in the media display.

When close-range braking is triggered, the symbol appears in red in the selected view in the Camera & parking menu.

ⓘ If close-range braking is not available, the symbol appears in grey.

Close-range braking serves solely as an aid. It is not a substitute for you having to pay attention to your surroundings. The responsibility for safe manoeuvring, parking and exiting parking spaces remains with you. Ensure that no persons, animals, objects, etc. are in the vehicle path.

⚠ **WARNING**
Risk of accident caused by limited detection by the manoeuvring brake function

The manoeuvring brake function cannot always clearly detect people. Other obstacles are not detected by the function.

In these cases, the function may brake unnecessarily or not brake at all.

- ▶ Always pay careful attention to the traffic situation; do not rely on the manoeuvring brake function alone.
- ▶ Be ready to brake.

SYSTEM LIMITS

OBSERVE THE SYSTEM LIMITS OF THE FOLLOWING FUNCTIONS:

- Active Parking Assist (⟶ page 448)
- 360° camera (⟶ page 439)
- Reversing camera (⟶ page 437)

THE CLOSE-RANGE BRAKING FUNCTION IS NOT AVAILABLE IN THE FOLLOWING SITUATIONS:

- on uphill gradients
- if transport equipment, forexample a trailer or bicycle rack, is attached to the trailer hitch and the electrical connection has been correctly established.

ACTIVATING/DEACTIVATING MANOEUVRING ASSISTANT

Multimedia system:

⟶ ⌂ ▶▶ Settings ▶▶ Assistance ▶▶ Parking

ⓘ This function is a Digital Extra .

ⓘ The Activating/deactivating manoeuvring assistant function is not available in all countries.

- ▶ Select Manoeuvring assistance.
- ▶ Activate or deactivate the desired manoeuvring assistant.

Trailer Manoeuvring Assist

FUNCTION OF TRAILER MANOEUVRING ASSIST

WARNING
Risk of accident due to unsuitable trailers

Trailers with a steered axle or a fifth wheel cannot be used with Trailer Manoeuvring Assist.

Due to this, the trailer cannot be manoeuvred in the desired direction and you can cause a collision or the trailer can overturn.

► Only use Trailer Manoeuvring Assist with trailers with fixed drawbars and axles.

NOTE
Damage due to overhanging loads in front or drawbar installations

The vehicle and the trailer may be damaged during manoeuvring due to overhanging loads at the front of the trailer or drawbar installations.

► Pay attention to overhanging loads or drawbar installations while manoeuvring.

Trailer Manoeuvring Assist assists you when reversing with a trailer. The reversing camera monitors the articulation angle between the vehicle and the trailer and adjusts it to a specified value. Trailer Manoeuvring Assist also limits your speed.

Trailer Manoeuvring Assist serves solely as an aid. It is not a substitute for you having to pay attention to your surroundings. The responsibility for safe manoeuvring, parking and exiting parking spaces remains with you at all times.

Ensure that there are no persons, animals or objects etc. in the manoeuvring area while manoeuvring and parking in/exiting parking spaces.

You can enter the articulation angle value directly via the multimedia system, or use a straightening or 90° manoeuvre. When carrying out a straightening manoeuvre, the system calculates the articulation angle automatically and straightens the vehicle/trailer combination to the trailer's current direction.

Observe the notes on trailer operation (→ page 461).

SYSTEM LIMITS

OBSERVE THE SYSTEM LIMITS OF THE FOLLOWING FUNCTIONS:

- Active Parking Assist (→ page 448)
- 360° camera (→ page 439)
- Reversing camera (→ page 437)

THE SYSTEM MAY BE IMPAIRED OR MAY NOT FUNCTION IN THE FOLLOWING SITUATIONS:

- The gradient is greater than approximately 15%.

USING TRAILER MANOEUVRING ASSIST

Requirements

- The vehicle has been started and is stationary.
- A trailer is selected in the Vehicle menu (→ page 465).
- A trailer has been detected.
- The gradient is less than approximately 15%.
- The tailgate is closed.
- The rear window of the EASY-Pack tailgate is closed.
- The parking brake is not engaged.

- The driver's seat belt is fastened.

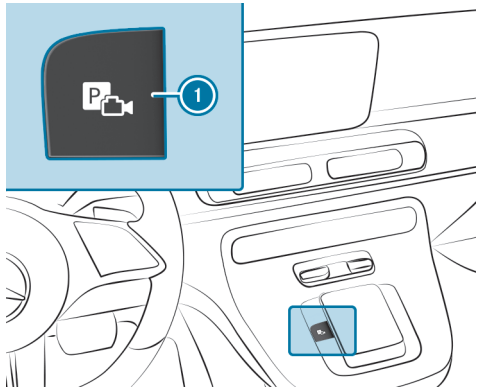

► Engage reverse gear R.

► Press the button ①.
The camera image is shown in the media display.

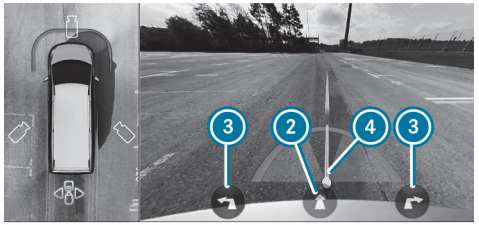

ⓘ This image is shown as an example and is without trailer.

You can select various manoeuvres in the Trailer Manoeuvring Assist menu. The manoeuvres available depend on the trailer's current articulation angle and length.

► To adjust the articulation angle: select ④. To change the articulation angle, swipe to the left or right on the media display in the entire area of the camera image.

or

► To activate the straightening manoeuvre: select ②.
The system calculates the articulation angle in such a way that the direction of the trailer at the time of activation is maintained. There is a short countersteering movement of the trailer while the vehicle is reversing to guide it back to the desired line. This allows the vehicle to align with the trailer, while at the same time maintaining the trailer's direction.

or

► To activate the 90° manoeuvre:
- align the vehicle in the same direction (line) as the trailer.
- Select ③ (left or right).

The system calculates the articulation angle so that a trailer can be manoeuvred into a driveway at the most acute angle possible when it is perpendicular to its own vehicle. After the manoeuvre, the vehicle is aligned again in the trailer's direction.

► Accelerate and brake as required.

ⓘ The maximum articulation angle depends on the length of the trailer. The system calculates this by driving the vehicle forwards, including cornering. Before the trailer length has been calculated, the maximum articulation angle is approximately 23°. The longer the trailer, the greater the maximum articulation angle (max. approximately 60°).

Be aware of all surroundings and always remain ready to brake.

Trailer operation

Notes on trailer operation

WARNING
Risk of accident and injury if the tongue weight is exceeded

The carrier system may detach from the vehicle, thereby endangering other road users.

- Always comply with the permissible tongue weight when using a carrier.

You can find specifications regarding the ball neck on the trailer's identification plate. You can find specifications regarding the trailer on the towing vehicle's identification plate and in the Technical Data (⟶ page 759).

NOTE
The operating permit may be invalidated due to the illegal installation of trailer hitches

The installation – including retrofitting – of a non-folding or non-removable trailer hitch that even partially conceals the license plate or the lighting system is prohibited.

- Observe the applicable legal regulations for the installation of trailer hitches.

You can attach carrier systems (e.g. a bicycle rack or load carrier) to the ball neck. When carrier systems are used on the ball neck, the maximum load capacity is 75 kg.

If the trailer coupling is detachable, it is essential to comply with the Owner's Manual of the trailer coupling manufacturer.

Place your vehicle/trailer combination on surfaces that are as even as possible and secure it against rolling away (⟶ page 382). Couple and uncouple the trailer carefully.

NOTE THE FOLLOWING REGARDING THE TONGUE WEIGHT:

- Make full use of the maximum tongue weight, where possible.
- Never allow the tongue weight to fall below a legally prescribed minimum; the tongue weight must always be positive.
- Do not exceed or fall below the permissible tongue weights – this must be observed during loading and unloading of the trailer.

DO NOT EXCEED THE FOLLOWING VALUES:

- Permitted braked or unbraked towing capacity

  The maximum permissible towing capacity for unbraked trailers is 750 kg.
- Permissible rear axle load of the towing vehicle
- Gross vehicle weight rating of the towing vehicle
- Gross vehicle weight rating of the trailer

- Permissible gross combination weight
- Maximum permissible speed of the trailer

THE RELEVANT PERMITTED VALUES, WHICH MUST NOT BE EXCEEDED, CAN BE FOUND IN THE FOLLOWING PLACES:

- in your vehicle documents
- on the identification plate of the trailer hitch
- on the trailer identification plate
- on the vehicle identification plate

If there are discrepancies between the values, the lowest one shall apply.

BEFORE DRIVING OFF, ENSURE THE FOLLOWING:

- The tyre pressure on the rear axle of the towing vehicle has been set for the maximum load.
- The headlamps have been set correctly.

Comply with the maximum permissible speed of 80 km/h or 100 km/h, even in countries in which higher speeds are permitted for vehicle/trailer combinations.

ⓘ During trailer operation, remember that PARKTRONIC is available only to a limited extent, if at all.

ⓘ The height of the ball head will change depending on the vehicle's load. In this case, use a trailer with a height-adjustable drawbar.

VEHICLES WITH A DETACHABLE TRAILER COUPLING

NOTE
Increased risk of damage to property due to attached ball neck

▶ When the trailer is not coupled or the bicycle rack is attached, fold in the ball neck.

Reduce the risk of damage to the trailer coupling and help to protect the environment. If you do not need the ball neck, remove it from the ball neck mount and fit its cover in the rear bumper (→ page 462). Only with the cover fitted can the emission values indicated for real operation be achieved.

ⓘ During trailer operation, the permissible gross vehicle weight is increased by 100 kg for vehicles registered as passenger vehicles. The maximum permissible rear axle load must be observed.

Fitting the cover for trailer coupling

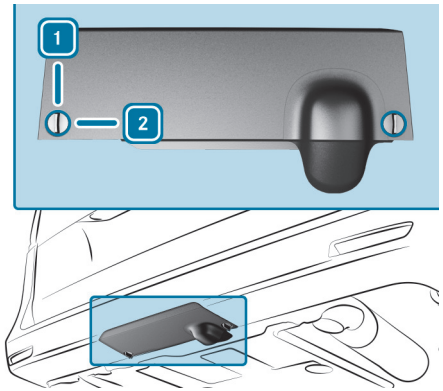

- Insert the cover flush into the recess on the rear bumper and press it upwards against the bumper covering at the latching points on the outside right and left.
- Turn fasteners from position 1 to position 2.
- Ensure that the fasteners are fully engaged and firmly in position 2.

Attaching the ball neck

WARNING
Risk of accident and injury due to incorrectly installed and secured ball neck

If the ball neck is not engaged, it may become loose while the vehicle is in motion and endanger other road users.

- Engage the ball neck as described and ensure that the ball neck is securely installed.

WARNING
Danger of accident due to non-engaged ball coupling

If the ball coupling has not engaged, the trailer can become detached.

- Always engage the ball coupling as described and ensure that it is securely installed.

Requirements:

- The trailer hitch key is available.

- Note the number of the key that belongs to the ball neck of the trailer hitch.
  With this number, you will receive a replacement key at a Mercedes-Benz service centre.

Depending on the vehicle equipment, the holder for the ball neck on the vehicle can be protected with a cover in the bumper.

- Release the two quick-release fasteners for the cover in the bumper and remove the cover (→ page 462).
- Take the ball neck of the trailer hitch out of the stowage space on the right-hand side in the rear and stow the cover away.

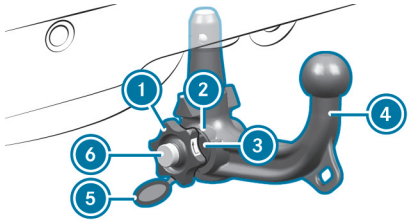

- Unlock lock 6 in handwheel 1 with the key. Red mark 3 on the handwheel must be aligned with green area 2 on ball neck 4 (fitting position).
- If red mark 3 is not aligned with green area 2, unlock lock 6 in handwheel 1 with the key.
- Pull handwheel 1 outwards. Turn red mark 3 into green area 2 of ball neck 4 until handwheel 1 engages.

- Slide ball neck ④ vertically into the holder until it audibly engages.

  The ball neck will lock automatically. Green mark ③ on handwheel ① is aligned with green area ② on ball neck ④.

  Only if the green mark on the handwheel is aligned with the green area on the ball neck is the ball neck securely engaged.

- Lock lock ⑥ in handwheel ① with the key.

- Remove the key and place cap ⑤ on lock ⑥.

  The ball neck is securely installed only if the ball neck can be locked and the key removed.

- Store the trailer hitch key in a safe place, e.g. in the vehicle document wallet.

If you cannot remove the key, the ball neck may be dirty.

- Remove the ball neck (→ page 464) and clean it (→ page 653).

If you still cannot lock the ball neck after cleaning it, the trailer hitch is damaged.

- Remove the ball neck.

  Safe trailer operation is not guaranteed. The ball neck must no longer be used for trailer operation.

- Have the trailer hitch checked at a qualified specialist workshop.

Removing the ball neck

Requirements:

- The trailer hitch key is available.

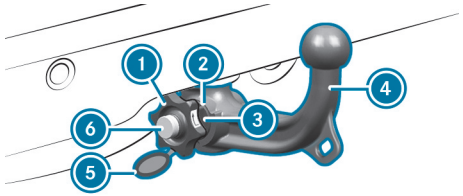

- Remove cap ⑤ from lock ⑥ in handwheel ①.

- Unlock lock ⑥ in handwheel ① with the key.

- Hold ball neck ④ in place.

- Pull handwheel ① outwards. Turn red mark ③ on handwheel ① into green area ② of ball neck ④ until handwheel ① engages. Pay attention to the pictogram on handwheel ①.

- Pull ball neck ④ out downwards.

- If the ball neck is dirty, clean it (→ page 653).

ⓘ Depending on the vehicle equipment, the holder for the ball neck on the vehicle can be protected with a cover in the bumper.

- Store the ball neck with the key inserted in the stowage space on the right-hand side in the rear and remove the cover for the ball neck holder.
- Insert the cover in the lower section of the bumper and tighten the two quick-release fasteners for the cover (→ page 462).

Selecting the trailer type

Multimedia system:

Settings ▶▶ Vehicle ▶▶ Driving ▶▶ Trailer type

CONFIGURING SETTINGS FOR A TRAILER

The settings in this menu make it possible to calculate a route suitable for the selected trailer and optimise the calculated arrival time.

- Select the desired trailer type.
- Select the maximum permissible speed for the selected trailer.
- **To save changes:** select Confirm.

ⓘ When contact with the trailer socket is established (trailer/rear bicycle rack), a menu will automatically appear on the media display.

THE FOLLOWING OPTIONS ARE AVAILABLE:

- Bicycle rack
- Small trailer
- Large trailer

Coupling/uncoupling a trailer

Requirements

- The ball neck must be engaged in a securely locked position.

TRAILERS WITH 7-PIN PLUGS CAN BE CONNECTED TO THE VEHICLE USING THE FOLLOWING ADAPTERS:

- Adapter plug
- Adapter cable

COUPLING A TRAILER

NOTE
Damage to the starter battery due to full discharge

Charging the trailer battery using the power supply of the trailer can damage the starter battery.

- Do not use the vehicle's power supply to charge the trailer battery.

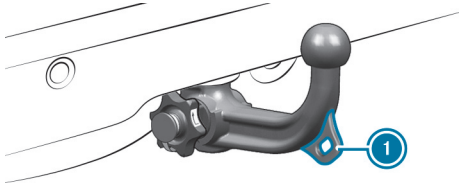

1 Eyelet for breakaway cable

The eyelet on the ball neck is used exclusively for attaching the trailer breakaway cable. You must not attach a tow rope, a tow bar or anything similar to the eyelet. The eyelet has not been designed for such a load and may tear.

- Shift the transmission to position P.
- Apply the vehicle's parking brake.
- Close all the doors.
- Position the trailer on a level surface behind the vehicle.

ⓘ The height of the ball head will change depending on the vehicle's load. In this case, use a trailer with a height-adjustable drawbar.

- Couple up the trailer.

- **To install an adapter:** open the cover of the socket.
- Insert plug 2 with tab 1 into the socket's groove 3.
- Turn plug 2 clockwise as far as it will go.
- Let the cover engage.
- Attach the cable to the trailer with cable ties (only in the case of adapter cables).
- Make sure that the cable is always slack for ease of movement during cornering.
- Establish all electrical and other connections to the trailer. In the process, attach the trailer's breakaway cable to the eyelet on the ball neck.
- Check that the trailer's lighting system works properly.

  A trailer will be detected only if the electrical connection is established correctly and the lighting system is in working order. The function of other systems also depends on this, e.g. ESP®, PARKTRONIC, Active Parking Assist, Blind Spot Assist or Lane Keeping Assist.

EVEN IF THE TRAILER IS CONNECTED CORRECTLY, A MESSAGE MAY NEVERTHELESS APPEAR ON THE DRIVER DISPLAY IN THE FOLLOWING CASES:

- LEDs have been installed in the trailer's lighting system.
- The current has fallen below the trailer lighting system's minimum current (50 mA)

ⓘ You can connect accessories up to a maximum of 240 W to the permanent power supply.

- Remove objects or devices that are preventing the trailer from rolling, e.g. chocks.
- Release the trailer's parking brake.

UNCOUPLING A TRAILER

WARNING
Risk of being crushed and becoming trapped when uncoupling a trailer

When uncoupling a trailer with an engaged inertia-activated brake, your hand may become trapped between the vehicle and the trailer drawbar.

- Do not uncouple trailers with an engaged overrun brake.

NOTE
Damage during uncoupling with an engaged overrun brake

The vehicle may be damaged if you uncouple with an engaged overrun brake.

- Do not uncouple trailers with an engaged overrun brake.

- Shift the transmission to position P.
- Apply the vehicle's parking brake.
- Close all the doors.
- Apply the trailer's parking brake.
- Further secure the trailer against rolling away with a wheel chock or similar object.
- Disconnect all electrical and other connections to the trailer.
- Uncouple the trailer.

Selecting the trailer type

Multimedia system:

Settings ▸▸ Vehicle ▸▸ Driving ▸▸ Trailer type

CONFIGURING SETTINGS FOR A TRAILER
The settings in this menu make it possible to calculate a route suitable for the selected trailer and optimise the calculated arrival time.

- Select the desired trailer type.
- Select the maximum permissible speed for the selected trailer.
- **To save changes:** select Confirm.

When contact with the trailer socket is established (trailer/rear bicycle rack), a menu will automatically appear on the media display.

THE FOLLOWING OPTIONS ARE AVAILABLE:

- Bicycle rack
- Small trailer
- Large trailer

Driver display

This interactive PDF works like a website – tap or click a button to jump straight to where you want to go. You can return here at any time via the navigation bar at the top left.

Notes on the driver display
Driver display malfunction
What to do in the event of a driver display malfunction
Overview of the driver display
Power availability display (vehicles with petrol engines)
Operating the driver display
Overview of status indicators on the driver display
Notes on menus on the driver display
Calling up and operating menus on the driver display
Menus and submenus
Adjusting the instrument lighting

Notes on the driver display

THE DRIVER DISPLAY SHOWS THE FOLLOWING BASIC INFORMATION:

- Speed and engine speed
- Fuel level and coolant temperature
- Indicator and warning lamps

ADDITIONAL FUNCTIONS AVAILABLE INCLUDE THE FOLLOWING:

- Different menus, e.g. for assistance and navigation
- Status displays for the driving systems
- Display messages
- Information on consumption and range

Driver display malfunction

WARNING
Risk of accident if the driver's display fails

If the driver's display fails or malfunctions, you may not be aware of any functional limitations to safety-critical systems. This may affect the operating safety of the vehicle.

► Park the vehicle safely as soon as possible and notify a qualified specialist workshop.

A DRIVER DISPLAY MALFUNCTION CAN BE RECOGNISED BY THE FOLLOWING BEHAVIOUR:

- When the vehicle is switched on, the driver display remains black and no content is displayed.
- The driver display restarts.
- The content does not change.
- No more values are displayed, such as speed. Various indicator and warning lamps are also displayed.

What to do in the event of a driver display malfunction

If the driver display is not functioning or the function is restricted, immediately park the vehicle in a safe place in accordance with the traffic conditions. The following procedure is recommended:

- Stop the vehicle in accordance with the traffic conditions.
- Continue to apply the brake pedal when the vehicle is stationary.
- Press the P button on the DIRECT SELECT lever.
- Apply the parking brake.
- Slowly release the brake pedal and make sure that the vehicle is secured against rolling away.
- Press and hold the Start/Stop button once for around three seconds to deactivate the drive (→ page 382).
- Inform a qualified specialist workshop immediately.
- Do not have the vehicle towed away, but have it transported.

ⓘ Also observe the additional notes on parking the vehicle (→ page 382) and the notes on loading the vehicle (→ page 679).

Overview of the driver display

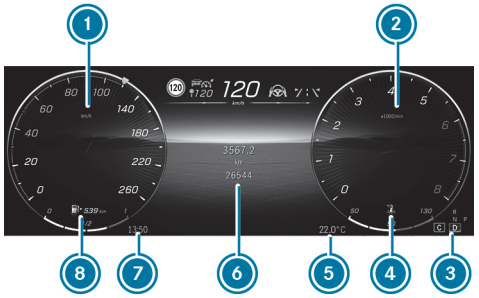

Driver display (example)

1. Speedometer
2. Rev counter or clock
3. Transmission position
4. Coolant temperature display or power availability display (→ page 473)
5. Outside temperature
6. Display content, centre on the Classic menu (example: trip distance)
7. Time
8. Fuel level and fuel filler flap location indicator

Different display content of the Classic menu can be shown in centre display area 6 (→ page 481):

ⓘ Vehicles with petrol engine: the red engine speed range displayed on tachometer 2 will change depending on the engine temperature.

ⓘ Vehicles with petrol engine: the power availability display will be shown instead of the coolant temperature display (→ page 473). You can find the coolant temperature display in the Service menu of the driver display (→ page 482).

Power availability display (vehicles with petrol engines)

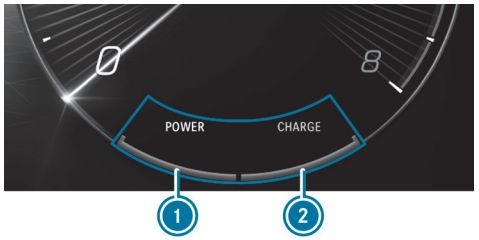

Power availability display (example)

1. Electric drive support
2. Recuperation behaviour of the electric motor

ⓘ Due to various system limits, the values displayed may temporarily differ slightly from the actual value.

Operating the driver display

WARNING
Risk of distraction from information systems and communications equipment

If you operate information systems and communication devices integrated in the vehicle when driving, you could be distracted from the traffic situation. This could also cause you to lose control of the vehicle.

- Only operate this equipment when the traffic situation permits.
- If you cannot be sure of this, stop the vehicle whilst paying attention to road and traffic conditions and operate the equipment with the vehicle stationary.

Observe the legal requirements for the country in which you are currently driving when operating the driver display.

SCROLLING ON THE MENU BAR

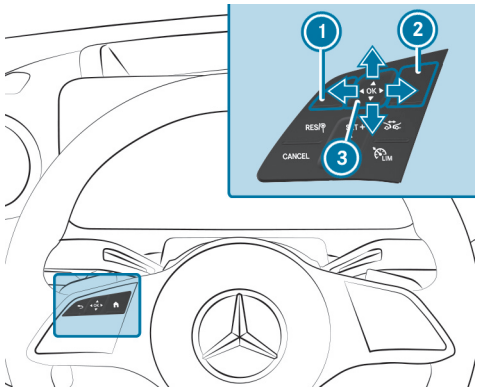

1. Back button
2. Main menu button
3. Touch Control

The content on the driver display is controlled using the control elements on the left side of the steering wheel. You can use Touch Control 3 to navigate vertically and horizontally by swiping with one finger. Confirm the selection by pressing the Touch Control.

To operate Touch Control 3 in the most effective way, use the tip of your thumb if possible. You can also set the sensitivity of the Touch Control on the media display (→ page 511).

- Briefly press main menu button 2.
- Select a menu by swiping to the left or right on Touch Control 3.
- **To confirm:** press Touch Control 3.

Overview of status indicators on the driver display

The status indicators for the driving and driving safety systems can be found in display sections 1 to 4.

Status indicators on the driver display (example)

1 Upper status indicators

Cruise control (→ page 405)

LIM Limiter (→ page 406)

Active Distance Assist DISTRONIC (→ page 409)

Specified distance for Active Distance Assist DISTRONIC (→ page 409)

Active Steering Assist (→ page 421)

Active Lane Keeping Assist (→ page 434)

Attention Assist malfunction (→ page 403)

Blind Spot Assist (on assistant display only) (→ page 433)

120 km/h! Maximum permitted speed exceeded (for certain countries only)

2 Right-hand status indicators

P (Example) transmission position (→ page 362)

C (Example) drive program (→ page 368)

Occupant presence reminder switched off (→ page 176)

3 Lower status indicators

ECO start/stop function (→ page 358)

P Active Parking Assist is available (→ page 448)

P Active Parking Assist has detected a parking space (→ page 448)

P OFF Parking Assist PARKTRONIC switched off (→ page 445)

Active Brake Assist impaired or not functioning (→ page 400)

OFF Active Brake Assist switched off (→ page 400)

HOLD HOLD function (⟶ page 401)

Slippery road surface warning

4 Left-hand status indicators

Adaptive Highbeam Assist Plus (⟶ page 296)

Rear window wiper switched on (⟶ page 309)

Vehicles with Speed Limit Assist: detected instructions and traffic signs (⟶ page 424)

Vehicles with Traffic Sign Assist: detected instructions and traffic signs (⟶ page 428)

Important information from other driving systems may briefly appear in front of the displayed traffic signs.

Notes on menus on the driver display

WARNING
Risk of distraction from information systems and communications equipment

If you operate information systems and communication devices integrated in the vehicle when driving, you could be distracted from the traffic situation. This could also cause you to lose control of the vehicle.

- Only operate this equipment when the traffic situation permits.
- If you cannot be sure of this, stop the vehicle whilst paying attention to road and traffic conditions and operate the equipment with the vehicle stationary.

Observe the legal requirements for the country in which you are currently driving when operating the driver display.

Use the left-hand control panel on the multifunction steering wheel to call up the list of menus and select a menu (→ page 474).

THE FOLLOWING MENUS CAN BE CALLED UP VIA THE MENU BAR ON THE DRIVER DISPLAY:

- Understated (→ page 481)
- Sport
- Classic (→ page 481)
- Navigation (→ page 484)
- Assistance (→ page 483)
- Service (→ page 482)

On some of these menus, you can choose between different display content in the centre display area.

On most of the menus, you can use Options to configure further settings for the menu-specific display content.

Calling up and operating menus on the driver display

CALLING UP A MENU VIA THE DRIVER DISPLAY MENU BAR

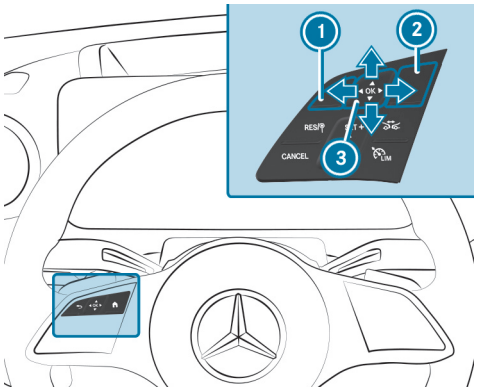

1 Back button
2 Main menu button
3 Touch Control

► Press the main menu button 2 on the steering wheel.
The driver display menu bar will open.

► Swipe to the left or right on the Touch Control 3 and select a menu (e.g. the Classic menu) on the menu bar.

► **To confirm:** press Touch Control 3.

CALLING UP OR EXITING THE OPTIONS SUBMENU

► **To call up:** press Touch Control 3.

► **To exit:** press back button 1.

BROWSING THROUGH DISPLAY CONTENT OR LISTS

► Swipe upwards/downwards or to the left/right on Touch Control 3.

ⓘ Within different menus, icons will also appear at the right-hand edge of the centre display section to indicate your current position in a list.

SETTING DISPLAY CONTENT AS THE STANDARD DISPLAY

You can set custom-configured menu display content as the standard display.

► Press and hold Touch Control 3 until the bar display is completely filled.
The Set direct entry? prompt will appear.

► Swipe to the left on Touch Control 3 and select Yes.

► **To confirm:** press Touch Control 3.

- **To call up standard displays:** press back button (1) on the upper level of a menu.

ⓘ Pressing back button (1) on the standard display will call up the previous menu.

Menus and submenus

Configuring settings on the Classic or Understated menus

Driver display:

Classic

SELECTING DISPLAY CONTENT IN THE CENTRE DISPLAY AREA OF THE CLASSIC MENU

► Call up the Classic menu via the driver display menu bar.

► **To select display content:** swipe upwards or downwards on the left-hand Touch Control and select the desired display content.

THE FOLLOWING INFORMATION CAN BE DISPLAYED ON THE CENTRE DISPLAY CONTENT:

- Trip and total distance
- Distance From start and From reset
- ECO display (→ page 359)
- Range trend display
- Current consumption
- ATTENTION ASSIST (→ page 403)
- Audio
- Navigation (with changing navigation instructions)

CALLING UP OR EXITING THE OPTIONS SUBMENU ON THE CLASSIC MENU

Depending on the selected display content, you can make changes in the centre display area on the Options submenu.

► **To call up the Options submenu:** press the left-hand Touch Control.

► **To exit the Options submenu:** press the back button ⮌.

THE FOLLOWING FUNCTIONS MAY BE AVAILABLE ON THE OPTIONS SUBMENU, FOR EXAMPLE:

- Navigation: selecting and adjusting zoom, route guidance and map settings
- Resetting the trip odometer
- Resetting the trip computer From start
- Resetting the trip computer From reset
- Resetting the ECO display values

► **To reset the values:**Press Touch Control ③.
The driver display shows Reset values?.

► Select Yes and press the left-hand Touch Control ③ to confirm.

SELECTING THE RADIO STATION OR TRACK ON THE STATION OR TRACK LIST

You can select radio stations or tracks on the station or track list in the audio or media display content of the Classic menu.

THE FOLLOWING ADJUSTMENTS CAN BE MADE IN THE MBUX MULTIMEDIA SYSTEM:

- Configuring the station or track list
- Switching between media sources
- Setting the frequency band

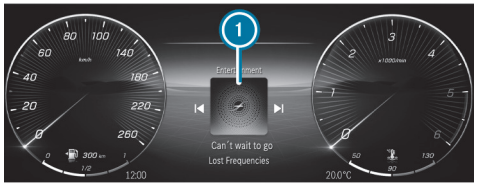

(1) Track list for the audio display content in the centre display area (example)

► **To change radio stations or tracks:** swipe left or right on the left-hand Touch Control and select a radio station or track on the station or track list (1).

ⓘ If you do not carry out any operations immediately after opening the station or track list (1), the view will return to the radio station or track selected.

ⓘ The radio station or track displayed when the vehicle is restarted depends on the user profile used for the previous trip.

CHANGING COLOUR SETTINGS ON THE UNDERSTATED MENU

► Call up the Understated menu via the driver display menu bar.

► **To call up the colour list:** press the left-hand Touch Control.
The colour list on the Understated menu will appear.

► **To select colour settings:** swipe upwards or downwards on the left-hand Touch Control and select the desired colour setting.

ⓘ If you do not carry out any operations within a limited time after opening the colour list, the view will switch back to the default view of the Understated menu.

► **To exit the colour list:** press the back button ↩.

ⓘ Depending on the equipment, the selected colour setting will be adopted for the ambient lighting and the MBUX multimedia system. If you select the Understated menu on the driver display, the content in the MBUX multimedia system will also be made smaller.

Calling up the Service menu

Driver display:
→ Service

The current status of the vehicle is shown on the Service menu.

► **To call up the menu:** press the left-hand Touch Control.

THE FOLLOWING DISPLAY CONTENT IS AVAILABLE IN THE SERVICE MENU (EQUIPMENT-DEPENDENT):

- Information about how many messages are in the message memory

- AdBlue: AdBlue® range and fill level
- Tyre pressurecheck the tyre pressure
- ASSYST PLUS: calling up the service due date (→ page 637)
- Engine oil level: checking the engine oil level (→ page 37)
- Coolant indicator

THE FOLLOWING FUNCTIONS ARE AVAILABLE ON THE OPTIONS SUBMENU:

- Restarting the tyre pressure monitoring system (→ page 696)
- Message memory (→ page 764)

Calling up the assistant display (Assistance menu)

Driver display:

→ Assistance

Various driver assistance systems and navigation instructions are shown on the assistant display.

► **To call up the display:** select Assistance on the driver display.

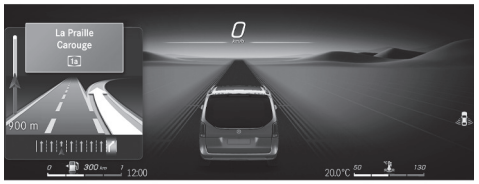

Active Distance Assist DISTRONIC display on the assistant display (example)

THE FOLLOWING DISPLAYS MAY VARY DEPENDING ON THE DRIVING SITUATION:

- The navigation instructions in the left-hand display section
- The display of the driver assistance systems
- The level of detail on the assistant display

THE FOLLOWING STATUS INDICATORS ARE AVAILABLE ON THE ASSISTANT DISPLAY:

- Green radar waves next to vehicle: Blind Spot Assist is enabled and ready for operation
- Grey radar waves next to vehicle: Blind Spot Assist is enabled but not ready for operation

THE CONTENT ON THE ASSISTANT DISPLAY WILL ADAPT TO THE FOLLOWING SITUATIONS:

- Number of lanes detected
- Change of direction, e.g. lane change
- Current road conditions
- Road users detected

ⓘ The assistant display will not display other detected obstacles with the exception of road users.

THE FOLLOWING FUNCTIONS ARE AVAILABLE ON THE OPTIONS SUBMENU:

- Starting route guidance
- With active route guidance: end route guidance

- Call up previous destinations and favourites
- Start new route guidance to a recent destination
- Start new route guidance to a favourite

Calling up the Navigation menu

Driver display:

Navigation

The Navigation menu shows the relevant map with navigation instructions.

► **To call up the menu:** press the Touch Control.

1. Distance to the change of direction
2. Road to which the change of direction leads
3. Traffic incident indicator
4. Currently selected route
5. Indicator showing vehicle's current position
6. Change-of-direction symbol
7. Recommended lane (white)
8. Lane not recommended (grey)
9. Current lane

ⓘ The level of detail in the navigation instructions in the left-hand display section may vary.

CHANGING THE SCALE OF THE SELECTED MAP VIEW

► **To zoom in and out on the map directly:** swipe upwards or downwards on the Touch Control.

ⓘ If you do not operate anything when Autozoom (⟶ page 574) is active, the system will reset the scale of the map view already selected after a short time.
You can set the permanent map scale display in the multimedia system (⟶ page 571).

THE FOLLOWING FUNCTIONS ARE AVAILABLE ON THE OPTIONS SUBMENU:

- With active route guidance: end route guidance
- Select route guidance
- Map settings

ⓘ If the current route guidance is ended on the Navigation menu of the driver display, it will also be ended in the MBUX multimedia system.

On the Options submenu, you can use other functions in the Destinations and Map settings categories.

YOU CAN USE THE FOLLOWING FUNCTIONS IN THE DESTINATIONS CATEGORY:

- Call up previous destinations and favourites

- Start new route guidance to a favourite

> The two options Work and Home will be displayed in Favourites even if no address is stored.

YOU CAN USE THE FOLLOWING FUNCTIONS IN THE MAP SETTINGS CATEGORY:

- Activate auto zoom
- Set the map view, satellite view and route overview

THE FOLLOWING MAP VIEWS ARE AVAILABLE ON THE NAVIGATION MENU:

- Entire route
- 2D direction of travel
- 2D north-up

Adjusting the instrument lighting

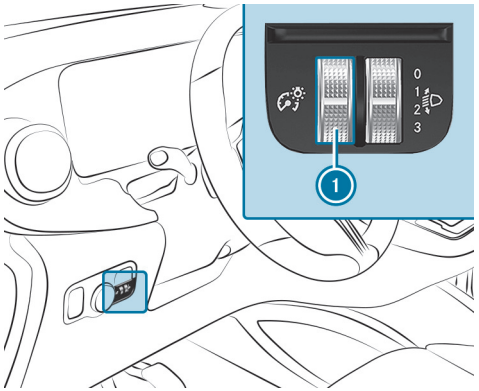

The light sensor automatically controls the brightness of the display lighting.

When the light has been switched on, the brightness control is influenced by the ambient light. You can then adjust the brightness of the instrument lighting and the display lighting with controller 1 as well.

► Turn controller 1 up or down.

Back to Contents

MBUX Voice Assistant

This interactive PDF works like a website – tap or click a button to jump straight to where you want to go.
You can return here at any time via the navigation bar at the top left.

Notes on operating safety

Operating the MBUX Voice Assistant

Using MBUX Voice Assistant effectively

Basic voice commands

Notes on operating safety

FOR YOUR OWN SAFETY, ALWAYS OBSERVE THE FOLLOWING POINTS WHEN OPERATING MOBILE COMMUNICATIONS EQUIPMENT AND ESPECIALLY YOUR VOICE CONTROL SYSTEM:

- Please observe the legal requirements for the country in which you are driving.
- If you use the voice control system in an emergency your voice can change and your telephone call, e.g. an emergency call, can thereby be unnecessarily delayed.
- Familiarise yourself with the voice control system functions before starting the journey.

The voice control system does not replace the Owner's Manual.
The answers from the voice control system do not provide the complete scope of information contained in the Owner's Manual. The voice control system also does not give detailed warning or damage information. Therefore read the Owner's Manual so that you are fully informed about the functions and the safe operation of the vehicle.

Operating the MBUX Voice Assistant

Conducting a dialogue

Requirements:

- Voice activation is activated in the multimedia system (→ page 490).
- For corrections during output, the Voice barge-in option must be activated in the multimedia system (→ page 490).

STARTING A DIALOGUE

► Say Hey Mercedes to activate the MBUX Voice Assistant.

or

► Press the button on the multifunction steering wheel.

A wave appears in the MBUX multimedia system. The dialogue can be started.

For the dialogue with the MBUX Voice Assistant, you can use complete sentences of colloquial language as voice commands. Voice activation can also be combined directly with a voice command, e.g. Hey Mercedes, how warm is it outside?

INTERRUPTING THE DIALOGUE

► During the dialogue say Pause.

The dialogue is interrupted.

► Say Hey Mercedes to continue the dialogue.

CORRECTING AN ENTRY

► During the dialogue say Correction.

or

► Interrupt the system's voice output.

CHANGING DIALOGUE LEVEL

► During the dialogue, say Back.

The MBUX Voice Assistant jumps back to the previous dialogue step.

► During the dialogue, say From the beginning again.

The MBUX Voice Assistant jumps to the highest dialogue level.

NAVIGATING IN THE SELECTION LIST

If a voice command does not achieve a clear result, a selection list is shown.

► Say the line number or the content to select an entry or to have further details shown.

► Say Next page or Previous page to browse the selection list.

CALLING UP HELP

► **For information about the MBUX Voice Assistant:** say Hey Mercedes, what can you do? .

► **Current application:** say Help.

You will receive suggestions and information about operation of the MBUX Voice Assistant for the current application.

- **Specific function:** call up the voice command for the required function, for example with Hey Mercedes, I need help with the radio.
- **Digital Owner's Manual:** say Show me the Owner's Manual.
  The full extent of the Digital Owner's Manual is available on the media display when the vehicle is stationary.

Overview of the operable functions of the MBUX Voice Assistant

YOU CAN USE THE MBUX VOICE ASSISTANT TO OPERATE THE FOLLOWING FUNCTIONS DEPENDING ON THE VEHICLE EQUIPMENT:

- Telephone
- Text message and e-mail
- Navigation
- Radio and media
- Vehicle functions
- Online functions

Full functionality of the voice control system is only available for you with activation of online voice control (→ page 490).

Information on the language setting

You can change the language of the MBUX Voice Assistant via the system language settings (→ page 532). If the set system language is not supported by the MBUX Voice Assistant, English will be selected.

Setting functions of MBUX Voice Assistant using the multimedia system

Multimedia system:

→ [⌂] ▸▸ Settings ▸▸ System ▸▸ Voice assistant

SWITCHING VOICE ACTIVATION OF MBUX VOICE ASSISTANT ON OR OFF

> ⓘ For vehicles with driver camera or MBUX Interior Assistant, the MBUX Voice Assistant can be switched on or off in the Intelligent Assistants menu.

- Select Hey Mercedes.
  When the function is active, the Hey Mercedes voice command can activate the dialogue.

SWITCHING DIRECT COMMANDS ON OR OFF

- Select [⚙].
- Activate or deactivate the function.
  If the function is active, some commands can be used without Hey Mercedes, for example Next track.

SWITCHING VOICE ACTIVATION FOR INDIVIDUAL SEATS ON OR OFF

- Select [⚙].
- Switch the function for the desired seats on or off.

SWITCHING VOICE INTERRUPTION ON OR OFF

- Select Further settings.

- Select Voice barge-in.

  When the function is active, you can speak a command during voice output from the system.

SWITCHING PROACTIVITY ON OR OFF

- Select Further settings.
- Select the desired situation, e.g. Activate your profile or Don't forget your phone.

  When the function is active, the voice assistant proactively provides information in specific situations.

ACTIVATING OR DEACTIVATING ONLINE VOICE CONTROL

ⓘ Online voice control is activated at the factory.

- Select Online recognition.
- Activate or deactivate the function.

  If the function is switched on and a Mercedes-Benz user account is linked to the vehicle, additional results are available through external information, e.g. information on points of interest. By clicking the symbol in the wave, more information about the online voice control can be displayed.

ACTIVATING OR DEACTIVATING CONTACTS FOR ONLINE USE

- Select Contact upload for online recognition.

  When active the function allows contacts to be found more easily using voice input.

Using MBUX Voice Assistant effectively

Notes on optimum use of MBUX Voice Assistant

- The MBUX Voice Assistant is operational half a minute after switching on the vehicle and can be operated from all seats, depending on the equipment installed. The system recognises from which seat the command was spoken and performs actions according to the seat position.
- When a dialogue is ended, the MBUX Voice Assistant continues to be active for as long as the wave is displayed in the multimedia system. You can say another voice command without saying Hey Mercedes.
- Using the direct command Change language to English, the system language can be changed to English without Hey Mercedes. Direct commands must be activated for this.
- If a user profile has been stored and is active, the MBUX Voice Assistant can make suggestions based on the habits of the user. If the voice commands are not clear, the system selects an action. The action can be corrected with a new voice command.

  Say Hey Mercedes, load my personal profile, to activate the profile. The user's voice must first be learned by the system and assigned to a profile.

  Further information on user profiles (⟶ page 515).
- With the MBUX Voice Assistant, incoming calls can be accepted or rejected without the keyword Hey Mercedes.

Information on the MBUX online voice assistant

The online voice control facilitates recognition and thanks to external information makes additional results available.

Therefore, Mercedes-Benz recommends that you activate online voice control (⟶ page 490).

You will need a Mercedes-Benz user account for this. If you do not yet have a user account you have to create one and connect it with your vehicle (⟶ page 505).

Then call up your Mercedes-Benz user account. The Digital Extras are displayed and can be activated (⟶ page 506).

By clicking on the symbols displayed in the wave, further information on the online status is displayed.

WHEN ONLINE VOICE CONTROL IS ACTIVE, ADDITIONAL FUNCTIONS ARE AVAILABLE SUCH AS:

- Weather
- General knowledge
- Public holidays and school holidays
- Smarthome
- Messages
- Time, date and time zones

- Pocket and currency calculator
- Football results and fixture lists
- Share prices
- Calendar
- ChitChat
- Horoscope
- Geo Quiz

The availability of these functions is country and equipment-dependent.

Text content is taken from Wikipedia in accordance with the CC BY-SA 3.0 licence.

Basic voice commands

Notes on the voice commands

It is not necessary to use exact voice commands to call up a specific function. The MBUX Voice Assistant also understands you when you use your colloquial speech. Some examples are listed below. For some languages however these examples are only available to a limited extent.

EXAMPLES OF VOICE COMMANDS:

- Navigation (→ page 494)
- Telephone (→ page 494)
- Radio and TV (→ page 495)
- Media player (→ page 495)
- Messages (→ page 495)
- Vehicle functions (→ page 495)
- Online functions

Examples of navigation voice commands

You can operate the navigation system using the MBUX Voice Assistant. The following list offers just a small selection of the possible navigation commands. Speak the following voice command for further suggestions: Help for navigation.

- Drive me home.
- Where is the nearest filling station?
- Is there a service area along the route?
- Set Central Park as intermediate destination.
- Cancel the route guidance.
- Show my last destination.
- I want to buy juice.
- Search for a French restaurant in Manhattan.

Examples of telephone voice commands

You can operate phones connected with MBUX multimedia system the using the MBUX Voice Assistant. The following list offers just a small selection of the possible telephone commands. Speak the following voice command for further suggestions: Help for phone.

- Call Peter Miller on the mobile phone.
- Dial 0711 17 0.
- Call my father.
- Accept call
- Reject call
- Search for the contact Peter Miller.
- Switch to address book
- Show me the incoming calls.
- Switch the phone

Examples of radio and TV voice commands

Depending on the vehicle equipment, you can operate the radio and TV using the MBUX Voice Assistant. The following list offers just a small selection of the possible radio or TV voice commands. Speak the following voice commands for further suggestions: Help for radio. or Help for TV.

- Play the radio station Heart FM.
- Next station.
- Previous station.
- Show me the list of radio stations
- Save the station
- What am I listening to?

Examples of media voice commands

You can operate connected media sources and online music using the MBUX Voice Assistant. The following list offers just a small selection of the possible media voice commands. Speak the following voice command for further suggestions: Help for media or Help for player.

- Play Michael Jackson.
- Play "Yellow Submarine' by the Beatles.
- Next track.
- Previous track.
- Play similar track.
- Repeat this track.
- Switch on random playback.
- Mute the music.
- Switch to USB.

Examples of message voice commands

Messages can be created, edited and listened to using the MBUX Voice Assistant. The following list offers just a small selection of the possible message commands. Speak the following voice command for further suggestions: Help for messages

- Write a text message to Jane Doe: When will the next meeting take place?
- Show me my new e-mails.
- Write an e-mail to Jane Doe.
- Read me my new text messages.
- Show all new text messages.
- Write an e-mail to John Doe in English

Examples of vehicle voice commands

You can operate vehicle settings and vehicle functions using the MBUX Voice Assistant. The following list offers just a small selection of the possible vehicle voice commands.

> ⓘ If no seat is mentioned for commands, the action is carried out automatically for the seat from which the command was spoken or for the function which is closest to that seat.

- Switch the seat heating to level 2.
- My feet are cold.
- Open all the windows.
- How fast can I drive here?
- Tell me my next service appointment.

- How warm is it outside?

INFORMATION ABOUT THE VEHICLE CAN ALSO BE REQUESTED:

- Information about individual items of the vehicle equipment
  - Hey Mercedes, do I have Blind Spot Assist?
  - Hey Mercedes, where is the warning triangle?
- Information about functioning of the systems and components installed in the vehicle
  - Hey Mercedes, what is DISTRONIC?
  - Hey Mercedes, what do I need ESP for?
  - Hey Mercedes, what is MBUX?
- Information about operating the systems and components installed in the vehicle
  - Hey Mercedes, how do I connect my smartphone?
  - Hey Mercedes, how can I turn on the main beam headlamps?

Mercedes-Benz Support calls and Digital Extras

This interactive PDF works like a website – tap or click a button to jump straight to where you want to go.
You can return here at any time via the navigation bar at the top left.

Mercedes-Benz Support calls

Mercedes-Benz Connect

MB Apps (Digital Extras)

Mercedes-Benz Support calls

Making a call via the overhead control panel

ⓘ Mercedes-Benz Support calls are not available in all countries. Find out at a Mercedes-Benz service centre if these functions are available in your country.

ⓘ Please note that product scopes can vary depending on the model series, year of production and equipment, as well as between private and commercial user accounts.

THE FOLLOWING DIGITAL EXTRAS ARE NOT TIME-LIMITED:

- Accident and Breakdown Management
- Maintenance management
  The Digital Extra is not available in all vehicles.
- Telediagnosis

Other Digital Extras can be extended at the end of the initial term for a fee. The first activation of the Digital Extras is possible within one year of initial registration or commissioning by the customer, depending on which occurs first.

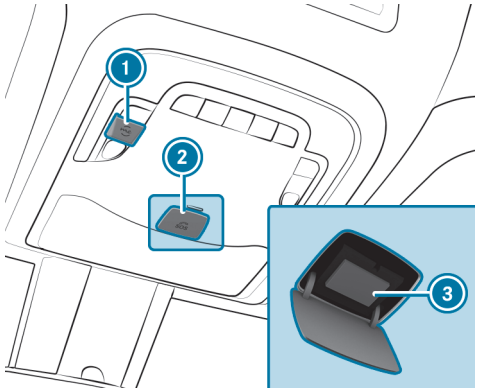

1. me button for Mercedes-Benz Support call
2. SOS button cover
3. SOS button (emergency call system)

Making a Mercedes-Benz Support call

► Press button 1.

MAKING AN EMERGENCY CALL

► Briefly press cover 2 on the SOS button to open it.

► Press and hold SOS button 3 for at least one second.

If a Mercedes-Benz Support call is active, an emergency call can still be initiated. This has priority over all other active calls.

Information on the Mercedes-Benz Support call via the overhead control panel

A Mercedes-Benz Support call to Mercedes-Benz Support has been initiated using the me button in the overhead control panel (⟶ page 498).

YOU CAN REACH THE DESIRED SERVICE VIA THE VOICE DIALOGUE SYSTEM:

- Accident and Breakdown Management
- Mercedes-Benz Support for general information about the vehicle

YOU CAN FIND INFORMATION ON THE FOLLOWING TOPICS:

- Activation of Digital Extras
- Operating the vehicle
- Nearest Mercedes-Benz service centre
- More products from Mercedes-Benz

Data is transmitted during the connection to Mercedes-Benz Support (⟶ page 500).

Calling Mercedes-Benz Support using the multimedia system

Requirements

- Access to a mobile phone network is available.
- There is sufficient network coverage from a mobile phone network provider In the respective region.
- The vehicle must be switched on so that vehicle data can be transferred automatically.

Multimedia system:

Phone

▶ Call Mercedes-Benz Support.

With your consent, the multimedia system sends the required vehicle data. The data transfer is shown in the display.

▶ Select a service using the voice dialogue system.

A connection is established with a contact person at Mercedes-Benz Support.

Arranging a service appointment via a Mercedes-Benz Support call

If you have activated the Service Management Digital Extra, relevant vehicle data is automatically sent to Mercedes-Benz Support. You will then receive individual recommendations regarding the maintenance of your vehicle. You will receive an offer for the upcoming maintenance scopes from the service partner stored in your user account.

Regardless of whether you have consented to the maintenance management service, the multimedia system reminds you after a certain amount of time that a service is due. A prompt appears asking if you would like to make an appointment.

▶ **To arrange a service appointment:** select Call.

After your confirmation, the vehicle data is sent and Mercedes-Benz Support deals with your appointment. The information is then sent to your desired service outlet.

This will contact you to confirm the appointment and if necessary consult about the details.

ⓘ If you select Call later after the service message appears, the message is hidden and reappears at a later time.

ⓘ No request for consent to data transmissions takes place if the Accident Recovery and Breakdown Management Digital Extras are activated.

Consenting to data transfer during a Mercedes-Benz Support call

Requirements:

- There is an active Mercedes-Benz Support call via the multimedia system or the buttons in the overhead control panel (⟶ page 498).

ⓘ The prompt to confirm data transfer does not appear in all countries.

If the Accident Recovery and Breakdown Management Digital Extras are not activated, the Do you want to transmit vehicle data and the vehicle's position to the Mercedes-Benz Customer Centre in order to improve the processing of your request? message appears.

► Select Yes.
Relevant identification data is transmitted automatically.

More information on Digital Extras: https://www.mercedes-benz.de/passengercars/services/mercedes-me.html

Data transmitted during a Mercedes-Benz Support call

If you initiate a call via Mercedes-Benz Support, data will be transferred. This enables targeted advice and smooth service.

THE FOLLOWING REQUIREMENTS MUST BE MET FOR THE DATA TRANSFER:

- The vehicle is switched on.
- The necessary data transmission technology is supported by the mobile phone network provider.
- A sufficient mobile phone connection quality is provided.

MULTI-STAGE TRANSMISSION DEPENDS ON THE FOLLOWING FACTORS:

- Reason for the initiation of the call
- Available mobile radio transmission technology
- Activated Digital Extras
- Selected service in the voice dialogue system

ⓘ A prompt for consent to data transmission is only made if the corresponding Digital Extra has not been activated.

ⓘ The scope of the transmitted data depends on the vehicle model and equipment. For technical reasons not all data is available at all times.

ⓘ The prompt to confirm data transfer does not appear in all countries.

DATA TRANSMISSION WHEN DIGITAL EXTRAS ARE NOT ACTIVATED

IF NO DIGITAL EXTRAS ARE ACTIVATED AND THE DATA PROTECTION PROMPT HAS BEEN CONFIRMED, THE FOLLOWING DATA ARE TRANSMITTED:

- Vehicle identification number
- Time of the call
- Reason for the initiation of the call
- Confirmation of the data protection prompt
- Vehicle country code
- Set language for the multimedia system
- Call number of the communication platform installed in the vehicle

IF A CALL IS MADE FOR A SERVICE APPOINTMENT VIA THE SERVICE REMINDER, THE FOLLOWING DATA IS ALSO TRANSMITTED:

- Current mileage and maintenance data

IF A CALL WAS MADE VIA THE MULTIMEDIA SYSTEM AFTER AUTOMATIC ACCIDENT OR BREAKDOWN DETECTION, THE FOLLOWING DATA IS ALSO TRANSMITTED:

- Current mileage and maintenance data

IF ACCIDENT RECOVERY AND BREAKDOWN MANAGEMENT IS SELECTED USING THE VOICE DIALOGUE SYSTEM AND NO DIGITAL EXTRA IS ACTIVATED, BUT THE DATA PROTECTION REQUEST HAS BEEN CONFIRMED, THE FOLLOWING DATA MAY ADDITIONALLY BE REQUESTED FROM THE VEHICLE BY MERCEDES-BENZ SUPPORT:

- Current vehicle location

IF THE DATA PROTECTION REQUEST HAS BEEN DECLINED, THE FOLLOWING DATA WILL BE TRANSFERRED TO ENABLE TARGETED ADVICE AND A SMOOTH SERVICE:

- Time of the call
- Reason for the initiation of the call
- Rejection of the data protection prompt
- Vehicle country code
- Set language for the multimedia system
- Call number of the communication platform installed in the vehicle

DATA TRANSMISSION WHEN DIGITAL EXTRAS ARE ACTIVATED

Only in the second step and only for the respective activated Digital Extras, further case-specific data is transmitted in order to enable an optimal service.

An overview of the data transmitted can be found in the respective terms of use for Digital Extras. You can obtain these in the Mercedes-Benz Portal: https://me.secure.mercedes-benz.com

DATA PROCESSING

The data transmitted as part of the call will be deleted from the transmitting systems once the call has been completed, provided they are not used for other activated Digital Extras.

The case-related data will be processed and stored at Mercedes-Benz Support and, if necessary for case processing, forwarded to the service partner commissioned by Mercedes-Benz Support. Please refer to the data protection notes for Digital Extras either on the Mercedes-Benz website at https://me.secure.mercedes-benz.com or in the pre-recorded message which you hear at the beginning of the call to Mercedes-Benz Support.

ⓘ The recorded message is not available in every country.

Mercedes-Benz Connect

Information on Mercedes-Benz Connect

ⓘ Mercedes-Benz Connect or individual Digital Extras are not available in every country. Contact a Mercedes-Benz service centre to find out whether these functions are available in your country.

ⓘ Please note that product scopes can vary depending on the model series, year of production and equipment, as well as between private and commercial user accounts.

YOU CAN USE THE FOLLOWING DIGITAL EXTRAS VIA THE MULTIMEDIA SYSTEM OR THE OVERHEAD CONTROL PANEL, IF AVAILABLE, FOR EXAMPLE:

- Accident Recovery (me button or the situation-dependent display in the multimedia system)
- Breakdown Management (me button or the situation-dependent display in the multimedia system)
- Mercedes-Benz Emergency Call System (automatic emergency call and SOS button)

The Accident and Breakdown Management Digital Extras and the Mercedes-Benz emergency call centre are available to you around the clock.

The me button and the SOS button can be found on the vehicle's overhead control panel (⟶ page 498).

If the multimedia system is available in the vehicle, you can also call Mercedes-Benz Support using the multimedia system (⟶ page 499).

Please note that Mercedes-Benz Connect is a Mercedes-Benz service. In emergencies, call the national emergency services first using the standard national emergency service phone numbers. You can also use the Mercedes-Benz emergency call system (⟶ page 72).

Please observe the terms of use and the data protection notes for the Digital Extras. You can find these in your Mercedes-Benz user account.

Further information on Mercedes-Benz Connect and Digital Extras can be found on the Mercedes-Benz Portal: https://www.mercedes-benz.de/passengercars/services/mercedes-me.html

Information on Accident and Breakdown Management Digital Extras

ⓘ The Accident and Breakdown Management Digital Extras are not available in all countries. Contact a Mercedes-Benz service centre to find out whether this function is available in your country.

THE ACCIDENT AND BREAKDOWN MANAGEMENT CAN, AMONGST OTHERS, INCLUDE THE FOLLOWING FUNCTIONS:

- Supplement to the Mercedes-Benz emergency call system (→ page 72)

  If necessary, the contact person at the Mercedes-Benz emergency call centre forwards the call to Accident and Breakdown Management. However, call forwarding is not possible in all countries.
- Breakdown assistance on location by a technician and/or towing away of the vehicle to the nearest Mercedes-Benz service centre

  You may be charged for these services.
- In the event of a breakdown or accident, further vehicle data is sent which enables optimal assistance by Mercedes-Benz Support and the appointed service partner or breakdown mechanic.
- If available: Supplement to the Telediagnosis Digital Extra

  With the Telediagnosis function, specific wear and failure reports are recorded by the service provider, in so far as these can be clearly interpreted and are available through the monitoring of components that are subject to diagnostics.

  If your vehicle detects a breakdown or threat of a breakdown, you may be prompted via the multimedia system to contact Mercedes-Benz Support for further help. This prompt in the multimedia system only appears when the vehicle is stationary.

ⓘ These Digital Extras are subject to technical restrictions such as the mobile phone coverage, mobile network quality and the ability of the processing systems to interpret the transferred data. Under certain circumstances, this may result in delays or omission of the message in the multimedia system.

Please note that Mercedes-Benz Support call is a Mercedes-Benz service. In the event of an emergency always call the national emergency services first or use the Mercedes-Benz emergency call system (→ page 663).

You can find more information on Digital Extras in the Mercedes-Benz Portal: https://www.mercedes-benz.de/passengercars/services/mercedes-me.html

Data transmitted with Mercedes-Benz Connect

THE DATA TRANSFERRED DURING A MERCEDES-BENZ SUPPORT CALL DEPENDS ON:

- The reason for the initiation of the call
- The service selected in the voice dialogue system
- The Digital Extras which are activated (→ page 500)

You can ascertain which data is transferred in conjunction with Digital Extras by consulting the currently valid terms of use and data protection notes for Digital Extras. You can find these in your Mercedes-Benz user account.

MB Apps (Digital Extras)

Information on MB Apps/Digital Extras

REQUIREMENTS

- To use the Digital Extras, registration must have been carried out in the Mercedes-Benz portal.
- You must have agreed with the terms of use for Digital Extras.
- The Digital Extras must be activated.

  The Digital Extras can be activated in the Mercedes-Benz Portal via the path Manage vehicle > My Digital Extras.

With a Mercedes me ID user account you have access to Mercedes-Benz services and offers.

> ⓘ Please note that product scopes can vary depending on the model series, year of production and equipment, as well as between private and commercial user accounts.

Availability is country-dependent.

Further information can be obtained from a Mercedes-Benz service centre or in the Mercedes-Benz Portal: https://www.mercedes-benz.de/passengercars/services/mercedes-me.html

Calling up a Mercedes me ID user account

Multimedia system:

MB Apps ▶▶ Mercedes me

VEHICLE IS LINKED TO A MERCEDES ME ID USER ACCOUNT AND DIGITAL EXTRAS ARE AVAILABLE

▶ Select Mercedes me ID.

Information about the linked Mercedes me ID appears.

VEHICLE IS NOT LINKED TO MERCEDES ME ID USER ACCOUNT

> ⓘ If you do not yet have a Mercedes me ID, you can create a Mercedes me ID at: https://www.mercedes-benz.de/passengercars/services/mercedes-me.html or in the Mercedes-Benz App. A valid email address or phone number is required for this.

▶ Select .

▶ Select MB Apps.

▶ Select Mercedes me.

▶ Follow the instructions on the display to link your Mercedes me ID user account with the vehicle.

ⓘ If the Mercedes-Benz App is available on a mobile phone, the vehicle link can be made via the displayed QR code.

Calling up Digital Extras

Requirements

- The vehicle is linked with the Mercedes me ID user account.

Multimedia system:

⟶ [⌂] ▸▸ MB Apps ▸▸ Mercedes me

▶ Select My Digital Extras.

The Digital Extras for which you have a valid licence are displayed in alphabetical order.

ORDERING OR EXTENDING DIGITAL EXTRAS

Use the store to order or extend Digital Extras.

▶ Select [⌂].

▶ Select Store.

Removing the link between the Mercedes me ID user account and the vehicle

Requirements:

- The Mercedes me ID of the user account that was first linked to the vehicle is logged in.
- The user profile is synchronised (⟶ page 518).
- A Mercedes me PIN has been set.

Multimedia system:

⟶ [⌂] ▸▸ MB Apps ▸▸ Mercedes me

▶ Select Mercedes me ID.

▶ Select Delete vehicle connection.

ⓘ Only the user whose Mercedes me ID user account was first linked to the vehicle can remove the link between all users and the vehicle.

MBUX multimedia system

This interactive PDF works like a website – tap or click a button to jump straight to where you want to go.
You can return here at any time via the navigation bar at the top left.

Overview and operation
Navigation
Driver camera
Telephone
System settings
Online and Internet functions
Vehicle information
Media
Off-road menu
Radio
ENERGIZING COMFORT
Sound
ENERGIZING COACH

Overview and operation

Overview of the MBUX multimedia system

WARNING
Risk of distraction from information systems and communications equipment

If you operate information systems and communication devices integrated in the vehicle when driving, you could be distracted from the traffic situation. This could also cause you to lose control of the vehicle.

- ► Only operate this equipment when the traffic situation permits.
- ► If you cannot be sure of this, stop the vehicle whilst paying attention to road and traffic conditions and operate the equipment with the vehicle stationary.

You must observe the legal requirements for the country in which you are currently driving when operating the multimedia system.
MBUX stands for Mercedes-Benz User Experience.

THE FUNCTIONS OF YOUR MBUX MULTIMEDIA SYSTEM MAY DIFFER AND DEPEND ON THE FOLLOWING FACTORS:

- Market
- National version
- Technical conditions

Functions and Digital Extras provided by Mercedes-Benz and/or third-party providers may no longer be available when the contractual period expires. This may also be due to technical prerequisites. There is therefore no entitlement to the continuous provision of functions and Digital Extras.
The described functions may be modified, optimised and adapted after the time of going to press.
Mercedes-Benz therefore reserves the right to introduce changes to functions and Digital Extras.
For these reasons, descriptions and depictions relating to the MBUX multimedia system may, in some cases, differ for your vehicle.

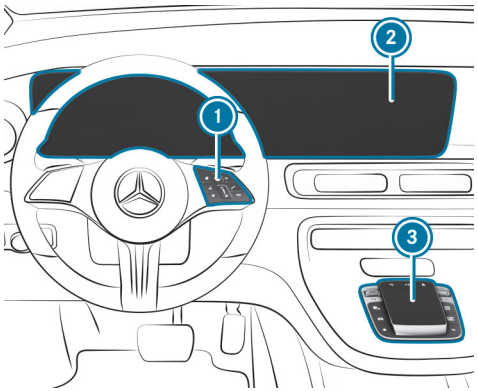

1 Touch Control and multimedia system control panel
2 Media display with touch functionality
3 Touchpad with buttons, calls up applications

A multimedia connection unit is found in the storage compartment in the centre console and has two type C USB ports (⟶ page 610).

YOU CAN OPERATE THE MULTIMEDIA SYSTEM WITH THE FOLLOWING CENTRAL CONTROL ELEMENTS:

- Touch Control 1
- Media display (touchscreen) 2
- Touchpad with buttons 3

ⓘ Alternatively, you can carry out a spoken dialogue with the MBUX Voice Assistant (⟶ page 489).

Multiple applications are available for you. These can be called up via the home screen or using the buttons on touchpad 3.

You can conveniently call up and add your favourites using the ☆ button on the steering wheel. Quick-access in the home screen and in the applications serve to select functions more quickly.

If you use the learning function of the multimedia system, you will receive suggestions during operation of the most probable navigation destinations, radio stations and contacts. The configuration of the suggestions takes place in your profile. You can compile your profile from various vehicle settings and settings of the multimedia system.

The Notifications Centre collects incoming notifications, e.g. about an available software update. Depending on the type of notification it offers various actions. You can call up the Notifications Centre on the home screen and in the menus of the applications.

With the global search in the vehicle you can search on-board across many categories as well as online in the Internet. You can use the global search in the home screen and in the notifications.

ANTI-THEFT PROTECTION

This device is equipped with technical provisions to protect it against theft. More detailed information about anti-theft protection can be obtained at a qualified specialist workshop.

Home screen overview

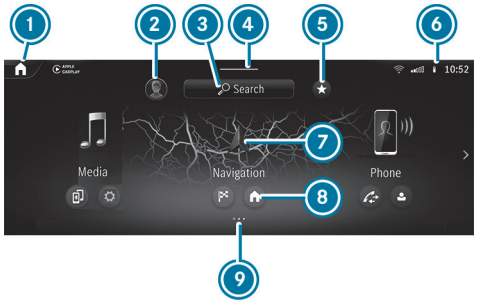

1. On the home screen: displays the first three applications
   In other displays: calls up the home screen
2. Calls up user profile settings and switches user
3. Uses the global search
4. Calls up the Control Centre: pull the bar down
5. Calls up favourites
6. Displays in the status line
7. Calls up an application
8. Quick-access to application
9. Index points for selected display area

THE FOLLOWING FUNCTIONS ARE CALLED UP IN THE CONTROL CENTRE:

- Notifications Centre
- Favourites
- Vehicle quick-access

In the image, the applications are arranged as a carousel. Pressing and holding on [⌂] arranges the applications in a grid. This view is also used by a smartphone, for example.

Steering wheel buttons

OPERATING TOUCH CONTROL (MULTIMEDIA SYSTEM)

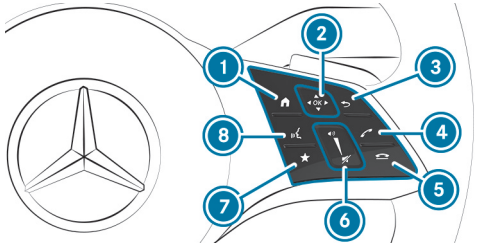

1. [⌂] Shows the home screen
2. Touch Control
   [◀] [▲] [▶] [▼] Swipe in the direction of the arrow (navigate)
   [OK] Press (confirm)
3. [↩] Returns to the previous display
4. [📞] Makes or accepts a call
5. [☎] Rejects or ends a call
6. To increase volume: swipe upwards
   To reduce volume: swipe down
   [🔇] To switch off the sound: press
7. [★] Calls up favourites
8. [🎤] Starts the MBUX Voice Assistant

ⓘ To operate Touch Control ② in the most effective way, use the tip of your thumb if possible.

You can navigate through menus and lists via the touch-sensitive surface of Touch Control ② using **a single-finger swipe**, for example:

- **To enter a character:** select a character using the keyboard and press on Touch Control ②.
- **To select a menu option:** scroll in a list and press Touch Control ②.
- **To move the digital map:** swipe in any direction.

SETTING THE SENSITIVITY FOR THE TOUCH CONTROL

Multimedia system:

→ ⌂ ▸▸ Settings ▸▸ System ▸▸ Control elements ▸▸ Touch Control sensitivity

- Select Fast, Medium or Slow.

Touchscreen

OPERATING THE TOUCHSCREEN

TAPPING

- **To select a menu item or entry:** tap on a symbol or an entry.
- **To increase the map scale:** tap twice quickly with one finger.
- **To reduce the map scale:** tap with two fingers.
- **To enter characters with the keyboard:** tap on a button.

SINGLE-FINGER SWIPE

- **To navigate in menus:** swipe up, down, left or right.
- **To move the digital map:** swipe in any direction.

TWO-FINGER SWIPE

- **To zoom in and out of the map:** move two fingers together or apart.
- **To enlarge or reduce the size of a section of a website:** move two fingers together or apart.
- **To turn the map:** turn anti-clockwise or clockwise using two fingers.

TOUCHING, HOLDING AND MOVING

- **To move the map:** touch the touchscreen and move your finger in any direction.
- **To set the volume on a scale:** touch the touchscreen and move the finger to the left or right.

TOUCHING AND HOLDING

- **To save the destination in the map:** touch the touchscreen and hold until a message is shown.
- **To call up a global menu in the applications:** touch the touchscreen and hold until the OPTIONS menu appears.

Touchpad

OPERATING THE TOUCHPAD

1. button
   Returns to the previous display
2. button
   Press: calls up the control menu of the last active audio source
3. button
   Press: shows the home screen and calls up applications
4. Turn: adjusts the volume
   Press: switches sound on or off
5. Calls up the navigation or map
6. Calls up radio or media
7. Calls up the telephone
8. Favourites button
9. Calls up vehicle functions

ⓘ The vehicle can be equipped with a lower control panel in the centre console instead of the touchpad.

- **To enter a character:** enter a character using the keypad.

or

- Write a character on the touch-sensitive surface of the touch-pad.

SELECTING A MENU ITEM OR ENTRY WITH ONE-FINGER SWIPES

- Swipe up, down, left or right.
- Press the touchpad.

MOVING THE DIGITAL MAP

- Swipe in any direction.

USING THE FOLLOWING FUNCTIONS WITH A TWO-FINGER SWIPE:

- **To call up the Notifications Centre:** swipe down with two fingers.
- **To close the Notifications Centre:** swipe up with two fingers.
- **To call up the control menu of the last active audio source:** swipe up with two fingers.
- **To zoom in and out of the map:** move two fingers together or apart.
- **To enlarge or reduce the size of a section of a website:** move two fingers together or apart.

Switching the sound for the MBUX multimedia system on or off

ON THE MULTIFUNCTION STEERING WHEEL

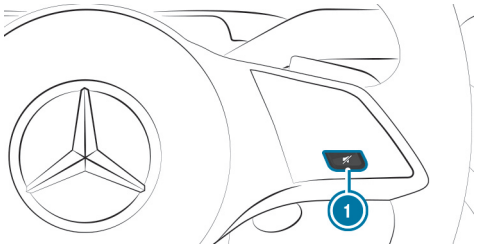

- **To switch off:** press button 1 on the steering wheel.
  The current audio source is muted.
  The [🔇] symbol appears in the status line of the media display.

If you are listening to a radio station, for example, and switch off the sound then all media sources will be muted.

Traffic and navigation announcements can still be heard in this case. The MBUX Voice Assistant and telephony are also not affected.

- **To switch on:** press button 1 on the steering wheel again.

> ⓘ If you adjust the volume or change the media source, the sound will also be switched on.

USING BUTTONS ON THE OPERATING STRIP

- Press controller 4 on the right of the touchpad (→ page 512).

Adjusting the volume

ON THE MULTIFUNCTION STEERING WHEEL

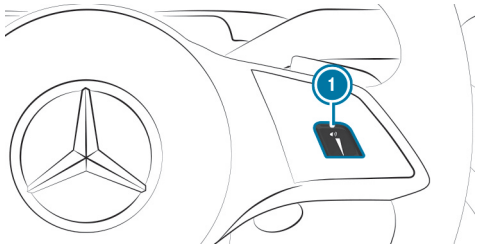

- Swipe across button 1.

USING BUTTONS ON THE OPERATING STRIP

- Turn controller 4 on the right of the touchpad (→ page 512).

Profile

NOTES ON USER PROFILES

WARNING
Risk of becoming trapped during adjustment of the driver's seat after calling up a driver profile

Selecting a user profile may trigger an adjustment of the driver's seat to the position saved under the user profile. You or other vehicle occupants could be injured in the process.

► Make sure that when the position of driver's seat is being adjusted using the multimedia system, no people or body parts are in the seat's range of movement.

If there is a risk of someone becoming trapped, immediately stop the adjustment process by:

► a) Tapping on the warning message on the media display.

or

► b) Pressing a position button of the memory function or a seat adjustment switch in the driver's door.
The adjustment process is stopped.

The driver's seat is equipped with an automatic reversing function.

If the driver's door is open, the driver's seat will **not** be set after calling up the driver's profile.

OVERVIEW OF USER PROFILES

REQUIREMENTS FOR USE

- You have registered with a Mercedes me ID and confirmed the terms of use.
- Your Mercedes me ID is linked to the vehicle.
- You have a Mercedes me ID PIN.

ⓘ If one of the pre-requisites listed is missing or if no user profile has been selected, the data described in the following section will be saved in the vehicle as the standard setting. Standard settings can be changed by all vehicle users.

User profiles save personal settings. If the vehicle is used by several people, a person can change their profile settings without changing the settings of other users.

You can individualise a user profile in the vehicle using the set-up assistant or using the settings in your user profile. Some settings such as the Mercedes me ID PIN and a profile photo are made in the Mercedes-Benz App or in the Mercedes-Benz Portal.

ⓘ If the user profile is downloaded while travelling, user profiles are not set up using the set-up assistant.

User-specific content and applications with personal data are protected by different levels of security (→ page 515).

To access protected content, the Mercedes me ID PIN and, depending on the vehicle equipment, biometric sensors are used.

The security level is set by the multimedia system and calculated from the combination of all sensor inputs. Some security levels cannot be turned off.

WHEN A USER PROFILE IS ACTIVATED, THE FOLLOWING PERSONALISED COMFORT SYSTEMS, FOR EXAMPLE, CAN BE ADJUSTED OR THEIR SETTINGS LOADED:

- Seat
- Outside mirrors
- Air conditioning adjustment

If the user profile is activated when driving, the driver's seat position will not be adjusted.

USER-SPECIFIC CONTENT

DEPENDING ON THE VEHICLE EQUIPMENT YOU CAN, AS A USER, SAVE THE FOLLOWING SETTINGS, FOR EXAMPLE:

- Driver's seat, steering wheel and mirror settings
- Climate control
- Radio (including station list)
- Suggestions and favourites

ADDING A USER

Requirements:

- The vehicle is stationary.

Multimedia system:

Select user

▶ Select ⊕ Add user.

A QR code is loaded.

▶ Scan the displayed QR code with the Mercedes-Benz App or any QR code scanner on a mobile device. If the Mercedes-Benz App is not yet installed on your mobile device, you will be directed to the store on your mobile device.

▶ Follow the steps in the Mercedes-Benz App.

The vehicle is linked to your Mercedes me ID. This automatically creates your user profile in the vehicle.

You will be informed when your user profile is available.

When the vehicle is stationary, the set-up assistant starts automatically after user selection.

When the user has been added, they can be selected (→ page 518).

SELECTING USER OPTIONS

Multimedia system:

Settings

PROTECTING USER-SPECIFIC CONTENT AND APPLICATIONS

If you add a new user, access protection is already activated for the user profile. The Mercedes me ID PIN and, depending on the vehicle equipment, biometric sensors are available for access. Biometric sensors in the vehicle must be taught in. The authentication process then takes all taught-in and available sensors into account.

THE FOLLOWING USER-SPECIFIC CONTENT AND APPLICATIONS ARE PROTECTED, FOR EXAMPLE:

- User selection and user profile settings
- Biometric sensors
  The teaching-in of biometric sensors
  For teaching in and editing biometric recognition see the following section.
- Suggestions
  The data and determination of the most probable navigation destinations, media sources, radio stations, contacts and messages.
- Parking service
  The payment transactions.
- Mercedes-Benz Store
  The purchase of Digital Extras
- System activations of paid vehicle functions

IN THE FOLLOWING CASES, YOU WILL BE PROMPTED TO AUTHENTICATE OR RE-AUTHENTICATE USING A SENSOR OR THE MERCEDES ME ID PIN:

- When selecting a protected user profile
- When calling a function requiring special protection
- If biometric sensors provide insufficient or contradictory information
- If the multimedia system no longer trusts a sensor
- If the seat belt buckle and the door are opened at the same seat and a function requiring special protection is called up
- When the vehicle is locked from outside

ⓘ Facial recognition for re-authentication in the driver's seat is only possible once the door has been closed or the seat belt buckle has been fastened.

▶ Select Protect content.

▶ Switch Access protection on or off.

ⓘ When access protection is switched off, your user profile can be viewed from any seat and changes can be made.

ⓘ Access protection is switched on or off on a vehicle-specific basis.

ⓘ Please note that authentication is necessary for several functions such as In-Car Office and cannot therefore be completely switched off.

SETTING UP AND EDITING BIOMETRIC RECOGNITION

The biometric data models are saved in the sensors in the vehicle. If recognition has been set up, this sensor serves as a contributory factor for authentication on the multimedia system.

▶ Select Protect content.

▶ Select Voice recognition.

▶ Select Facial recognition.

ⓘ If necessary, authenticate yourself on the multimedia system.

SETTING UP FACIAL RECOGNITION

► Follow the system's instructions.

Your face is scanned. A message in the driver display or central display shows whether facial recognition was successful or not. You can unlock your user profile and protected applications with the facial scan.

SETTING UP VOICE RECOGNITION

► Speak the sentence shown on the media display and follow the voice assistant's instructions.

If voice recognition was successful, a message appears on the media display. You can unlock your user profile.

ⓘ Avoid background or disturbing noises during voice recognition.

DELETING BIOMETRIC DATA

► Tap on 🗑 behind Voice recognition.

► Select Yes.

CALLING UP THE SET-UP ASSISTANT

► Select Profile.

► Select Set-up assistant.

► Follow the directions from the set-up assistant.

CHANGING USER NAME OR PROFILE PHOTO

► Select Profile.

► Select Change user name.

or

► Select Profile picture.

► Enter the user name or select a user image.

► Select Finished.

ⓘ You can save your photo for your Mercedes me ID in the Mercedes-Benz App or in the Mercedes-Benz Portal. The photo will then be shown in the vehicle. In the vehicle itself, you can select other sample images instead of the photo.

DELETING A USER PROFILE

► Select Profile.

► Select Remove.

► Select Remove user profile.

ⓘ Your Mercedes me ID and your personal data are retained in the Mercedes-Benz ecosystem.

RESETTING THE USER PROFILE TO FACTORY SETTINGS

► Select Profile.

► Select Reset.

► Select Yes.

ⓘ This resets the contents of the user profile to factory settings, but not the vehicle.

SELECTING A USER

Multimedia system:

ⓘ When you call up your driver profile, the driver's seat and the steering wheel can be set.

YOU CAN CANCEL THE SETTING PROCESS WITH THE FOLLOWING ACTIONS:

- Tap on the Tap here to cancel. message on the media display.
- Press one of the seat operating buttons in the driver's door.

▶ Select Select user.

▶ Select a user.

▶ When requested to do so, authenticate with the Mercedes me ID PIN or a taught-in biometric characteristic.

The user profile is loaded and activated.

ⓘ If you select Continue without selecting user, no specific settings for the user profile are loaded.

SYNCHRONISING USER PROFILES

Requirements:

- You have a Mercedes me ID.
- The vehicle is linked to your Mercedes me ID.

Multimedia system:

▶ Activate Synchronise automatically.

When the vehicle is switched on or off, the data stored in the vehicle is automatically synchronised with your Mercedes me ID. Synchronisation applies to all user profiles and is not specific to a particular profile.

or

▶ Select Synchronise now.

The data stored in the vehicle is synchronised with your Mercedes me ID after selecting this option.

ⓘ Not all user profile functions are available during synchronisation.

ⓘ **IF THE DIGITAL EXTRA PERSONALISATION IS DEACTIVATED IN THE VEHICLE, ONLY THE FOLLOWING USER PROFILE MASTER DATA IS SYNCHRONISED:**

- Profile name
- Profile image
- Mercedes me ID PIN

Favourites

OVERVIEW OF FAVOURITES

Favourites offer you quick access to frequently used applications. 100 favourites are available in total.

You can select favourites from categories or you add favourites directly from an application.

CALLING UP FAVOURITES
Multimedia system:

- Alternatively, in the home screen pull down bar ④ in the centre of the status line (→ page 510).
- Select ★ in the Control Center.

ADDING FAVOURITES
Multimedia system:

SELECTING FAVOURITES FROM CATEGORIES

- Select >.
- Select + Create new favourite.
- Select the category.
- Select a favourite.
  The favourite is stored at the next available position.
- **All positions in the favourites are taken:** confirm the message shown.
  A list shows all the favourites.
- Select a favourite which should be overwritten.

ADDING A FAVOURITE FROM AN APPLICATION
You can, for example, save a contact (example).

- **To save a contact as a global favourite:** select a contact (→ page 589).
- Press on a telephone number until a menu is shown.
- Select Save as favourite.
  The contact is added as a favourite.

RENAMING FAVOURITES
Multimedia system:

- Press on a favourite until a menu is shown.
- Select Rename.
- Enter the name.
- Save the names.

MOVING FAVOURITES
Multimedia system:

- Press on a favourite until a menu is shown.
- Select Move.
- Move the favourite to the new position.
- Tap on ✓.

DELETING FAVOURITES
Multimedia system:

- Press on a favourite until a menu is shown.
- Select Delete.
- Select Yes.

RESETTING FAVOURITES

► In the menu, select Reset all favourites.

► Select Yes.

Notifications Centre

OVERVIEW OF THE NOTIFICATIONS CENTRE

THE FOLLOWING COMMUNICATIONS ARE COLLECTED IN THE NOTIFICATIONS CENTRE:

- Communications which are generated by the vehicle or from multimedia system.
- Communications which are received through the use of services.

THE FOLLOWING NOTIFICATION TYPES ARE AVAILABLE FOR YOU:

- Navigable destinations and routes
- Messages (text messages)
- Calendar entries and reminders, e.g. from In-Car Office
  This function is not available in all countries.
- System information, e.g. Important software update available. Confirm to start the update.
- Other notifications, e.g. from additional online services that can be subscribed to or emergency reports (e.g. tornado)

The Notifications Centre is in the Control Centre.

Depending on the style set, newly received notifications are shown using a coloured dot.

Notifications are normally briefly shown as they are received. If you take no action, these are stored for future access in the Notifications Centre.

The notifications are sorted chronologically. The most recent notifications are at the top.

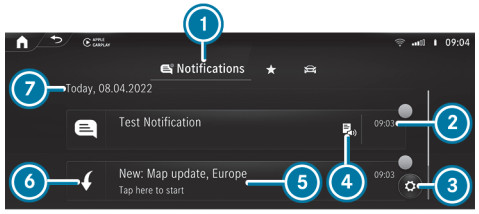

Example of a message
1. Calls up the Notifications Centre
2. Time message received
3. Calls up the settings
4. Display for available actions
5. Description of the notification and the issuing service
6. Symbol for the type of notification
7. Date of the received notifications

Depending on the type of notification, up to four different actions are available.

EXAMPLES OF ACTIONS INCLUDE:

- Reading aloud
- Placing a call
- Replying
- Calling up a web page
- Navigating

Some notifications, e.g. a navigation destination, are stored longer. Therefore, it is not necessary to carry out available actions directly upon receipt of the notifications. A route guidance can be started at a later time.

You can pin a notification so that this is not deleted automatically after a certain time (→ page 521).

CALLING UP NOTIFICATIONS

OPENING THE NOTIFICATIONS CENTRE

- Select [ ] in the Control Center.

SELECTING A NOTIFICATION

- If several messages are available swipe up or down.
- Select an action.

CLOSING THE NOTIFICATIONS CENTRE

- Select [ ].

SELECTING ACTIONS FOR A NOTIFICATION

THE FOLLOWING OPTIONS ARE AVAILABLE:

- Select the action directly after a notification is received and shown.
- Select the action later after calling up in the Notifications Centre.

- Up to two actions available: select the action.
- More than two actions available: select [ ].
- Select the action.
  The notification is still available.
- Close the actions with [ ].

EDITING NOTIFICATIONS

- Call up the Notifications Centre (→ page 521).

CONFIGURING SETTINGS

- Select [ ] Settings .
- Select the service.
- Switch the options on or off.

  THE FOLLOWING OPTIONS ARE AVAILABLE DEPENDING ON THE SERVICE:

  - Allow notifications
  - Display in notification centre
  - Show notifications
  - Switch Acoustic signals on or off
  - External access

    The option allows an external service access to specific data, e.g. the current vehicle position. The detailed, approved information is shown with ⓘ.

  If Allow notifications is switched off, the options cannot be selected with the exception of External access.

PINNING A NOTIFICATION

- Drag a notification to the right on the touchscreen.
  A pin appears.
- Tap on the pin.
  The notification is marked with a pin.

DELETING NOTIFICATIONS

- Drag a notification to the left on the touchscreen.

or

- Select [🗑].
- Select Yes.

  All messages are deleted.

Global search

GLOBAL SEARCH OVERVIEW

You can call up the global search on the home screen. You can enter characters using the keyboard.

Alternatively, the MBUX Voice Assistant allows voice input.

THE GLOBAL SEARCH PROVIDES SEARCH RESULTS FOR THE FOLLOWING CATEGORIES:

- Navigation
- Entertainment
- Phone, In-Car Office

  In-Car Office is not available in all countries.
- Digital Operating Instructions
- Website

The global search enables you to search for towns, roads and tourist attractions in the navigation category, for example.

If the search field is empty, you will first see smart suggestions in the Suggestions category.

The prerequisite for this is that the smart suggestions are activated in the system settings (→ page 532).

As soon as a letter is entered, you will be shown the best hits in the All category. You will find further search results in the individual categories. Next to the category is the number of results.

After selecting a category you can select the search results within the category. When you select a search result, a detailed view is opened depending on the category.

USING THE GLOBAL SEARCH

Multimedia system:

→ [⌂] ▸▸ [🔍] Search

In the Suggestions category up to six smart suggestions are displayed, even if no search entry has been entered yet.

- Enter the search term into the search field.

  As soon as a character is entered the All category is marked. Up to ten search results per category are displayed there.

  In the other categories suitable search results for the entered search item are displayed.

> ⓘ Alternatively, the MBUX Voice Assistant allows voice input via [🎤] (→ page 523).

- **To end the search:** select [OK].
- **To show search results for a category:** select a category.
- **To accept the search result:** select the search result.

  An action starts, e.g. a radio station is set or a detailed view is displayed, e.g. for a contact.

Entering characters

USING THE CHARACTER INPUT FUNCTION

Enter the characters on the Touch Control or on the touchscreen. Character input can be started with a control element and resumed with another.

► When the keypad is shown, enter the characters by swiping and pressing on the Touch Control or by tapping on the touchscreen.

Examples for character input include entering a navigation destination or renaming a favourite, for example.

ENTERING CHARACTERS ON THE TOUCHSCREEN

Requirements

- An online connection is required for some functions.

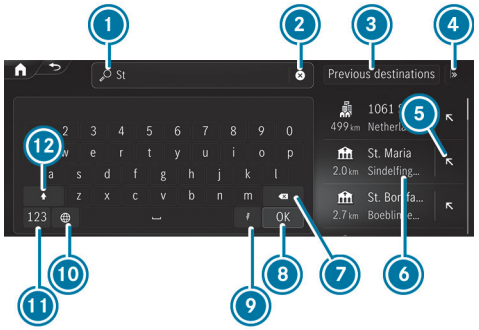

Character input with the keypad (destination entry)

1. Input line with current input
2. Deletes an entry
3. Selects previous destinations
4. Displays and selects additional destination searches
5. Adopts the search result in the input line and continues the search
6. Search result
7. Deletes the last character entered
8. Hides the keypad
9. Activates voice input
10. Sets the written language
11. Switches to digits and special characters
12. Switches to upper-case or lower-case letters

► Example: call up the navigation and enter a destination address (⟶ page 43).

► Briefly press on a character.
The character is entered in input line 1.

► Resume character input.

ⓘ The available editing functions depend on the editing task, the language set and the character level.

ENTERING ALTERNATIVE CHARACTERS

► Press and hold a character.

► Select the character.

ENDING CHARACTER INPUT

► Hide keypad 8 .

SETTING THE KEYBOARD FOR CHARACTER ENTRY

Multimedia system:

Settings ▶▶ System ▶▶ Keyboards

SETTING THE KEYBOARD LANGUAGE

- Select Keyboard languages.
- Select one or more keyboard languages.

DELETING THE USER DICTIONARY

The user dictionary learns from your inputs and offers suggestions during character input. You can reset the user dictionary.

- Select Reset my dictionary.
- Select Yes.

Driver camera

Overview of the driver camera

WARNING
Risk of injury from infrared radiation from the camera

This product uses an infrared lighting system of risk group 0 (RG0). If the housing is opened or damaged, infrared radiation may damage your retina.

- Do not open the housing.
- Always have maintenance work and repairs carried out by a qualified specialist workshop.

This device is a product of risk group 0 (RG0) according to IEC 62471:2006 (First Edition) & DIN EN 62471:2008.
The driver camera is located above or behind the media display.

THE DRIVER CAMERA DETECTS THE FOLLOWING CHARACTERISTICS:

- Head position
- Viewing direction
- Eyelid closure characteristics
- Driver's face

The driver camera is automatically activated each time the vehicle is opened with the key.

The current status of the driver camera is shown in the status line of the central display.

The driver camera records image data for applications such as ATTENTION ASSIST and facial recognition, for example.
The driver camera converts the image data directly into meta data. No image data is saved in the process. The data is only processed in the vehicle and is not transmitted from the vehicle.

The driver camera must be set up for facial recognition before use (→ page 515).

SYSTEM LIMITS

THE SYSTEM MAY BE IMPAIRED OR INOPERATIVE IN THE FOLLOWING SITUATIONS:

- The driver camera is covered or dirty, misted up or scratched.
- The driver's face and/or eyes are covered.
- The driver is wearing glasses that block infrared.

DISPLAY MESSAGES

IN THE FOLLOWING SITUATIONS DISPLAY MESSAGES MAY BE SHOWN:

- If the driver camera is not functioning.
  The driver camera is malfunctioning.
  The Driver camera inoperative See Owner's Manual message appears.

- If the view of the driver camera is reduced or restricted.

  The The camera's view of the driver is currently impeded Affected functions: see Owner's Manual message appears.

  The message can appear, for example, in the following cases:
  - The camera's view is obstructed, e.g. due to a scarf or hat being worn.
  - The driver is wearing glasses that block infrared.
  - If hair partially obstructs the eyes, e.g. as with a long fringe.
  - In the event of strong direct sunlight. The driver camera cannot detect the driver's eyes if the light-dark contrast is too strong.
  - When one or both hands are on top of the steering wheel (twelve o'clock position).

NOTES ON CARE

For the display, please comply with the notes on caring for the interior (⟶ page 656).

Switching the driver camera on/off

Multimedia system:

Settings ▶▶ System ▶▶ Intelligent assistants ▶▶ Driver camera

The driver camera is automatically activated each time the vehicle is switched on.

▶ Switching the driver camera on or off.

WHEN THE DRIVER CAMERA IS SWITCHED OFF OR THE SWITCH OFF DRIVER CAMERA? ATTENTION ASSIST WILL BE RESTRICTED **MESSAGE APPEARS, THE FOLLOWING FUNCTIONS ARE NOT AVAILABLE OR LIMITED:**

- The facial recognition

  This function serves as sensor input for authentication and unlocking of the user profile and protected applications (⟶ page 515).

System settings

Display

CONFIGURING DISPLAY SETTINGS

Multimedia system:

Settings ▶▶ System ▶▶ Displays & display messages

ADJUSTING THE BRIGHTNESS

- Select Display brightness.
- Vehicles with a driver display and media display: adjust the display brightness of the driver display or media display.

Time and date

SETTING THE TIME ZONE

Multimedia system:

Settings ▶▶ System ▶▶ Time and date

- Select Time zone.
  The list of countries is displayed.

> ⓘ If there are several time zones available in a country, these will be shown after the country is selected.

- Select a country and, if required, a time zone.
  The time zone set is displayed after Time zone.

or

- Select the Automatic time zone entry from the country list.
  The time zone will be set automatically according to the vehicle location.

> ⓘ The Automatic time zone option is available for vehicles with satellite reception.

SETTING THE TIME AND DATE FORMAT

Multimedia system:

Settings ▶▶ System ▶▶ Time and date ▶▶ Set format

- Select a time and date format.

SETTING THE TIME AND DATE MANUALLY

Requirements:

- The vehicle does not have satellite reception.

Multimedia system:

Settings ▶▶ System ▶▶ Time and date

SETTING THE TIME

- Select Set time.
- Set a time.
- Press OK to confirm.

SETTING THE DATE

- Select Set date.
- Select a date.
- Press OK to confirm.

ⓘ On vehicles with satellite reception, the time and date settings are determined automatically based on the vehicle location and cannot be set manually.

ADJUSTING THE TIME

- Select Adjust time.
- Set a value.
- Press OK to confirm.

ⓘ The function is only available in vehicles with satellite reception.

Switching voice amplification to the rear on/off (vehicles with a long wheelbase)

Requirements:

- Your vehicle is equipped with the Burmester® surround sound system.
- The vehicle is switched on.
- Doors, side windows and the panoramic sliding sunroof are closed.
- The rear seat belt buckle is inserted.

Multimedia system:

Settings ▶▶ System (System) ▶▶ Audio ▶▶ Voice amplification

The function supports communication between the driver/co-driver and the vehicle occupants in the rear passenger compartment. When voice amplification to the rear is activated, the microphone signals are, depending upon vehicle noise levels, amplified and played back over the speakers in the rear passenger compartment. Amplification is automatically adjusted to speaker volume and ambient noise, in order to improve speech intelligibility and maintain the naturalness of speech.

- Activate or deactivate the function.

SETTING THE INTENSITY OF VOICE AMPLIFICATION

- Select Voice amplification - intensity.
- Set the intensity using the control.

  Depending on the intensity set, voice amplification will become louder or quieter to the rear.

Vehicle position

SWITCHING TRANSMISSION OF THE VEHICLE POSITION ON OR OFF

Requirements:

- The vehicle is linked to a Mercedes-Benz ID.
- At least one Digital Extra is activated for the vehicle, which customers and/or co-users can use to display the vehicle position via the respective user accesses.

With this setting, you decide whether the vehicle position will be transmitted in order to show it to users who have access to the Digital Extras for this vehicle.

ⓘ The function is country-dependent. For more information, consult a Mercedes-Benz service centre.

Multimedia system:

Settings ▶▶ System ▶▶ Data protection

▶ Activate or deactivate the Transmit veh. position function.

ⓘ Alternatively, you can also switch the function on or off in the status line via .

Bluetooth®

INFORMATION ABOUT BLUETOOTH®

Bluetooth® technology is a standard for short-range wireless data transfer up to approximately 10 m.

YOU CAN USE BLUETOOTH® TO CONNECT YOUR MOBILE PHONE TO THE MULTIMEDIA SYSTEM AND USE THE FOLLOWING FUNCTIONS, FOR EXAMPLE:

- Hands-free system with access to the following options:
  - Contacts (→ page 589)
  - Call lists (→ page 591)
  - Text messages (→ page 592)
- Internet connection (→ page 600)

Bluetooth® is a registered trademark of Bluetooth Special Interest Group (SIG) Inc.

ⓘ Internet connection via Bluetooth® is not available in all countries.

ACTIVATING/DEACTIVATING BLUETOOTH®

Multimedia system:

Settings ▶▶ System ▶▶ Internet and Bluetooth

▶ Activate or deactivate Bluetooth.

Near Field Communication (NFC)

INFORMATION ON NEAR FIELD COMMUNICATION (NFC)

NFC enables short-range wireless data transfer or connection of a mobile phone with the multimedia system.

Further information can be found at: https://www.mercedes-benz-mobile.com/

SWITCHING NEAR-FIELD COMMUNICATION ON OR OFF

Multimedia system:

Settings ▶▶ System ▶▶ Internet and Bluetooth

▶ Activate or deactivate NFC.

ⓘ Further information on connecting a mobile phone via the NFC interface (→ page 585).

Wi-Fi

WI-FI CONNECTION OVERVIEW

You can use Wi-Fi to set up a connection to the Internet or to external network devices.

ⓘ Availability of the function is dependent on the respective country of use.

GENERALLY, TWO TYPES OF WI-FI CONNECTION ARE AVAILABLE:

- **Using the multimedia system as a Wi-Fi hotspot**(⟶ page 530)

  The vehicle's multimedia system serves as Wi-Fi hotspot for mobile communication devices, such as smartphones or tablet PCs, for example.

- **Using a mobile communication device as a Wi-Fi hotspot (tethering)** (⟶ page 601)

  An external Wi-Fi hotspot is accessed for the Internet connection of the vehicle's multimedia system.

SWITCHING WI-FI ON OR OFF

Multimedia system:

⟶ ⌂ ▶▶ Settings ▶▶ System ▶▶ Internet and Bluetooth

▶ Select Wi-Fi.

The controller is to the right: Wi-Fi is switched on.

When Wi-Fi is switched on, you can connect the multimedia system with external hotspots or make it available as a hotspot for external devices.

When Wi-Fi is switched off, it is not possible to establish a hotspot connection.

ⓘ Availability of the function is dependent on the respective country of use.

USING THE MULTIMEDIA SYSTEM AS A WI-FI HOTSPOT

Requirements:

- The device to be connected supports at least one of the types of connection described.

  The connection types shown depend on the device to be connected. The function must be supported by the multimedia system and by the device to be connected. The type of connection must be selected on the multimedia system and on the device to be connected.

ⓘ The data volume of the vehicle or an already connected tethering device is used for the data connection.
Vehicle data volume: depending on the vehicle equipment, you can purchase a data package directly from a mobile phone network provider via the Mercedes-Benz Store. To be able to use the data package, you must conclude your own contract with a mobile phone network provider via the Mercedes-Benz Store. This can be terminated at any time and incurs no costs. This contract is a prerequisite for using the services from the previously purchased package. The availability of this option is dependent on the country.
If the data package option is not available or can be upgraded, you can purchase data volume directly from the mobile phone network provider for a fee.

ⓘ Some functions may first need to be activated on the device being connected. More detailed information can be found in the manufacturer's operating instructions.

ⓘ The use of the vehicle data tariff by external devices is not available in all countries.

Multimedia system:

Settings ▶▶ System ▶▶ Internet and Bluetooth

- Select MBUX hotspot.
- Select one of the following connection options.

CONNECTING USING A QR CODE

Requirement: an app for scanning the QR code is installed on the device being connected.

Alternatively: the device being connected has an integrated QR code scanner (see the manufacturer's operating instructions).

- Scan the QR code shown.
  The Wi-Fi connection is established.

CONNECTING USING NFC

- Activate NFC on the device to be connected.
- When the NFC symbol is displayed in the MBUX hotspot menu, hold the device to be connected to the NFC interface.
- Follow the instructions on the device.
  The Wi-Fi connection is established.

CONNECTING USING A SECURITY KEY

- Select the vehicle from the device to be connected. The vehicle is displayed with the MBUX XXXXX network name.
- Enter the security key which is shown in the media display on the device to be connected.
- Confirm the entry.

GENERATING A NEW SECURITY KEY

- Select the Generate new security key option in the MBUX hotspot menu.
- Confirm the prompt with Yes.
  A new security key is generated.

A connection will be established with the newly created security key.

ⓘ When a new security key is generated, all existing Wi-Fi connections are then disconnected. If the Wi-Fi connections are being re-established, the new security key must be entered.

System language

NOTES ON THE SYSTEM LANGUAGE

This function allows you to determine the language for the menus and the navigation announcements. The selected language affects the characters available for entry. The navigation announcements are not available in all languages. If a language is not available, the navigation announcements will be in English.

SETTING THE LANGUAGE

Multimedia system:

Settings ▶▶ System ▶▶ Language

SETTING THE SYSTEM LANGUAGE

A list of the available system languages is shown.

- Select a language.
  The system language is switched to the selected language.

Setting the distance unit

Multimedia system:

Settings ▶▶ System ▶▶ Displays and appearance

ⓘ This function is not available in all countries.

- Select a unit for the distance.
- For an additional display in the driver display, activate Additional speedometer.

ⓘ The additional speedometer is located directly below the upper status display.

ⓘ Depending on the setting, km/h or mph is displayed in the additional speedometer.

Activating/deactivating system PIN protection

Multimedia system:

Settings ▶▶ System ▶▶ Data protection ▶▶ System PIN

SETTING THE SYSTEM PIN

- Select Set PIN.
- Enter a four-digit system PIN.
- Enter the four-digit system PIN again.
  If both system PINs match, then the system PIN protection is active.

CHANGING THE SYSTEM PIN

- Select Change settings.
- Enter the current system PIN.
- Select Change PIN.
- Set a new system PIN.

ACTIVATING SYSTEM PIN PROTECTION FOR SOFTWARE UPDATES

- Select Protect software updates.
- Activate or deactivate the function.

Configuring suggestions

Multimedia system:

Settings ▶▶ System ▶▶ Suggestions

- Select ⚙.

- Switch the options on or off individually.

  If an option is switched on and sufficient data has been gathered, personalised suggestions based on your user behaviour will be offered to you. These are, for example, navigation destinations visited, phone numbers dialled as well as suggestions based on your music preferences.

  Navigation

  When Allow destination suggestions is switched on, the vehicle makes suggestions based on your visited navigation destinations.

  If Commuter route is switched on, the navigation automatically detects that the vehicle is on a commuter route.

  Calls & messages

  Suggestions are offered for numbers dialled and messages sent.

  Comfort

  The vehicle makes suggestions based on the use of your comfort functions.

  Entertainment

  Suggestions are offered for the currently played media source. Suggestions are also made for online digital services, e.g. Spotify, TuneIn Radio and streaming services, and for categories, e.g. genre, artist and mood.

  Vehicle

  The suggestions for vehicle functions are displayed, e.g. for Parking Assist PARKTRONIC.

  Online voice services

  The suggestions are made available online based on your voice input and are offered on the zero layer.

ⓘ The suggestions offered depend on the equipment.

Deleting collected suggestions

Multimedia system:

⟶ [⌂] ▸▸ Settings ▸▸ System ▸▸ Suggestions

- Select [↺].
- Select Yes.

  The suggestions are reset.

Software update

INFORMATION ON SOFTWARE UPDATES

Software updates keep your vehicle and the related systems up-to-date and prevent security flaws.

Software updates are available for vehicle components such as control units, convenience systems, locking and safety systems, driver assistance systems, suspension and drive systems as well as for the MBUX multimedia system.

Software updates are available online via the communication module or a Wi-Fi connection to an external hotspot.

The navigation maps are also updated via updates from external storage media (e.g. USB flash drive).

Install available software updates regularly. Otherwise the security of your MBUX multimedia system and individual vehicle components cannot be ensured.

ⓘ Software updates can be protected with a system PIN. Further information about the system PIN (⟶ page 532).

Further information on software updates can be found at: https://me.secure.mercedes-benz.com

CARRYING OUT SOFTWARE UPDATES

Requirements:

FOR SOFTWARE UPDATES VIA THE COMMUNICATION MODULE AND WLAN:

- Your vehicle is linked to a Mercedes-Benz ID (→ page 505).
- Software updates without Mercedes-Benz ID: the Allow software updates option in the Software update menu is activated.
- For software updates via the communication module: an Internet connection exists via the communication module (→ page 601).
- For software updates via WLAN: a connection to an external WLAN hotspot exists (→ page 601).

ⓘ Depending on the software update, this is started via the communication module, WLAN or external storage medium.

ⓘ Online software updates cannot be performed via external Wi-Fi hotspots that are encrypted via TKIP.

ⓘ If the WLAN hotspot requires logging in via the browser, once the connection is successfully established the browser will open in order to start the update. Follow the instructions in the browser in order to start the download.

Multimedia system:

→ ⌂ ▸▸ Settings ▸▸ System ▸▸ Software update ▸▸ ⚙

STARTING A MAP UPDATE FROM AN EXTERNAL STORAGE MEDIUM

▶ Connect the storage medium with the vehicle via a media interface.
A message about an available map update appears on the media display.

▶ Select the message.

▶ Select Start.
The map update is started.

STARTING THE SOFTWARE UPDATE VIA THE COMMUNICATION MODULE

If the Automatic online update option is active, available software updates are downloaded and installed automatically. Activate the option in order to always keep your vehicle up-to-date and avoid security flaws.

▶ Select Automatic online update.
The software update is downloaded and installed automatically.

If the option is deactivated, you will be informed of new software updates once. The updates are available for downloading for a limited period of time.

▶ Select an update from the list of available updates.

▶ Start the update.
The software update is downloaded and installed automatically.

STARTING A SOFTWARE UPDATE VIA WLAN

Some software updates require an additional connection to a WLAN hotspot. The connection to an external hotspot can be established when the software update is started.

▶ Select an update from the list of available updates.

- Start the update.
- Establish the connection to a WLAN hotspot.
  The update is downloaded and installed automatically.

There are software updates that can only be installed when the vehicle is safely parked, there are no more people in the vehicle and the vehicle is locked.

FOR SOFTWARE UPDATES REQUIRING A SAFE VEHICLE STATUS
When the last installation step is completed, a message appears on the media display after the vehicle has been switched off.

- Follow the step-by-step instructions on the media display to complete the installation.

INSTALLING SOFTWARE UPDATES
Software updates are installed automatically after they are downloaded. As soon as the software update has been completed, a message appears on the media display. It may be necessary to restart the MBUX multimedia system.

Some software updates require a safe vehicle status for the installation to be completed. They can only be carried out in a safely parked vehicle with the vehicle switched off. If this is necessary, a message appears on the media display after the vehicle is switched off.

- Follow the instructions on the media display.

For some software updates, you can set a time for installation. The installation is carried out automatically at the scheduled time. You may not be in the vehicle during installation. Please observe that the planned installation can only start when the vehicle is locked.

If an installation is available where you can set the time, a message appears on the media display after the vehicle is switched off.

- Follow the instructions on the media display.

The vehicle cannot be used while these software updates are being installed. Make sure that no persons or animals are in the path of your vehicle. Events stored in the vehicle's control units can be overwritten.

AVAILABILITY OF THE DRIVER AND MEDIA DISPLAY
During the installation of software updates, it is not possible to use the vehicle, driver display and media display. You may receive a display message when an installation is running.

> ⓘ The display message does not appear every time a software update is installed.

In rare cases, an error can occur during the installation. The multimedia system automatically attempts to restore the previous version.

If restoration of the previous version is not possible, a message appears on the display.

FAILURE OF THE DRIVER DISPLAY:
If the driver display fails or there is a malfunction, you may not recognise limitations in the functions of systems relevant to safety or the speed display, for example. This may impair the operating safety of the vehicle. Park the vehicle safely as soon as possible and notify a qualified specialist workshop.

FAILURE OF THE MEDIA DISPLAY:
If the media display fails or the display message is shown continuously, several systems such as the reversing camera or climate control are no longer available. Drive on carefully and consult a specialist workshop as soon as possible.

Further information about software updates can be found at https://me.secure.mercedes-benz.com

Resetting the multimedia system (reset function)

WARNING
Risk of accidents due to failure of multimedia display functions

While the multimedia system is being reset, its functions such as the reversing camera are not available.

- Only reset the multimedia system when the vehicle is stationary.

Requirements

- The vehicle is switched on.
- Some settings can only be reset when the vehicle is stationary.

Multimedia system:

Settings ▶▶ System ▶▶ Reset

WHEN RESETTING THE SYSTEM, PERSONAL DATA AND SETTINGS ARE DELETED, FOR EXAMPLE:

- Connected devices
- Individual user profiles
- Biometric data

ⓘ The data used and saved in the multimedia system by the driver assistance systems is deleted.

- Select Reset.
  A query appears asking if the system should really be reset.
- Select Yes.
  The multimedia system is reset to its state at delivery. The multimedia system is restarted after the system reset.

ⓘ Due to data protection, as well as the function of individual driving systems and driving safety systems, it is a requirement to carry out a complete system reset before selling the vehicle or transferring it to a third party, or after use as a hire car.

Vehicle information

Displaying vehicle data

Multimedia system:

Info

- Select Vehicle.

  The vehicle data is displayed.

Displaying engine data

Multimedia system:

Info

- Select Engine.

  The engine data is displayed.

> The actual maximum values that can be achieved for engine output and engine torque may deviate from the certified values within the country-specific guidelines for permissible tolerances (basis: UN-ECE No. 85 or country-specific guidelines).
>
> **ITEMS THAT CAN INFLUENCE THIS ARE, FOR EXAMPLE:**
>
> - Sea level
> - Fuel quality
> - Outside temperature
> - Operating temperature of the engine
>
> Adapt your driving style accordingly.
> The warning lamp in the driver display is on until the engine has reached operating temperature.

> The values displayed serve only as guidance. The values for engine output and engine torque shown in the media display may deviate from the actual values.

> The warning lamp to show the power output limitation after starting the vehicle is not available in all vehicle models.

Displaying the fuel consumption indicator

Multimedia system:

Info

- Select Consumption.

  The current and average fuel consumption will be displayed.

Off-road menu

Overview of the Offroad menu in the MBUX multimedia system

THE OFFROAD MENU SHOWS INFORMATION ON THE FOLLOWING TOPICS:

- Overview of the most important data of relevance to driving off-road.
- Supporting functions for driving off-road.

OFF-ROAD
This menu provides an overview of the most important data. Content is displayed in various tiles which can be changed using the direction arrows. What's more, this menu contains buttons for quick-access to certain vehicle functions which are relevant to off-road operation.

DISPLAYED DATA ARE, FOR EXAMPLE:

- Artificial horizon
- Compass
- Altitude
- Torque and power
- Tyre pressure and temperature
- Transparent bonnet

Setting the off-road menu in the multimedia system

Multimedia system:

Offroad

SETTING DISPLAYS IN THE CENTRAL DISPLAY

▶ Press ◁, ▷ or on the display itself to jump to the next display.

ⓘ The availability of individual functions depends on country and equipment.

QUICK-ACCESS: ACTIVATING OR DEACTIVATING PARKING ASSIST PARKTRONIC

▶ Press P to switch the function on or off.

ⓘ Further information on Parking Assist PARKTRONIC (⟶ page 445).

QUICK-ACCESS: ACTIVATING OR DEACTIVATING ESP® (ELECTRONIC STABILITY PROGRAM)

▶ Press OFF to switch the function on or off.

ⓘ Further information on ESP (⟶ page 394).

QUICK-ACCESS: ACTIVATING OR DEACTIVATING MANUAL SHIFTING

- Press M to switch the function on or off.

ⓘ Additional information on manual gearshifting (→ page 369).

QUICK-ACCESS: ACTIVATING OR DEACTIVATING DSR (DOWNHILL SPEED REGULATION)

- Press DSR to switch the function on or off.

ⓘ Further information on DSR (→ page 419).

QUICK-ACCESS: SETTING THE VEHICLE LEVEL

- Press to raise or lower the vehicle.

ⓘ Additional information about vehicle level (→ page 373).

QUICK-ACCESS: SWITCHING THE OFF-ROAD CAMERA ON OR OFF

- Press to switch the function on or off.

ⓘ Further information on the off-road camera (→ page 443).

ⓘ The off-road camera can also be switched on or off using the button in the off-road control panel.

ENERGIZING COMFORT

Overview of ENERGIZING COMFORT programmes

Note that the available programmes and the associated functions depend on your vehicle equipment. Depending on your equipment, fewer functions may be available.

PROGRAMME OVERVIEW

- **Refresh:** Can have a refreshing effect with short, cool puffs of air. The seat is ventilated, the vehicle interior is illuminated with cool colours and the programme is completed with appropriate sound.
- **Warmth:** Can increase the comfort level of the vehicle occupants. Seat, surface and steering wheel heater provide soothing warmth. The programme is completed with unobtrusive sound and warm colours.
- **Vitality:** Can counteract diminishing attentiveness in monotonous driving situations. The activating stimulation of the vehicle occupants is carried out with invigorating sound and activating light.
- **Joy:** Can promote a positive mood in the vehicle occupants as well as mental regeneration. This is achieved through friendly sound and illumination with appropriate colours.
- **Well-being:** Can help relax the vehicle occupants. This is achieved through friendly light and soothing sound.
- **Forest Glade:** Can have a calming and soothing effect on the vehicle occupants thanks to the acoustics of the forest. The ambience is supported by a suitable animation, colours and sound.
- **Sounds of the Sea:** Can contribute to calming the vehicle occupants. The acoustics of wave sounds and seagulls in combination with other vehicle functions create a relaxing seashore atmosphere.
- **Summer Rain:** Can help relax the vehicle occupants. The relaxing effect of a rain shower can be experienced via acoustics and other vehicle functions inside the vehicle.
- **Training:** Can counteract the onset of muscle tension, limbs falling asleep or stress with targeted relaxation or stimulation exercises. The exercises are demonstrated in short videos.

  The training consists of audio content and a brief animation. The audio content is conceived so that it can also be played back when you are driving. Animations are only shown when the vehicle is stationary. Always observe the traffic conditions if you are training when driving.
- **Tips:** The system gives auditory tips for possible exercises or measures for improving the comfort level of the vehicle occupants. By selecting the desired area of the body you can receive targeted tips for the comfort level of this area.

Most programmes that have been started for one seat can also be transferred simultaneously to another seat.

Starting the ENERGIZING COMFORT programme

WARNING
Increased risk of accident when using the ENERGIZING COMFORT programmes Tips and Training

The ENERGIZING COMFORT programmes Tips and Training can distract you while driving.

- Only carry out exercises when the traffic situation permits.
- When listening to the tips, make sure that you are aware of the traffic situation around you at all times.

Requirements:

- The vehicle is switched on.

Multimedia system:

Comfort ENERGIZING COMFORT

STARTING AND STOPPING A PROGRAMME

- Select a programme.
- Select ▶ for the desired seat.
- Select ■ to stop the programme.

ⓘ If, during an active programme, a function requirement is no longer met, a corresponding message appears. The active programme is cancelled.

CONFIGURING A PROGRAMME

- Select a programme.
- Select Settings.
- Switch the functions included in the programme on or off.

SETTING THE DURATION

- Select a programme.
- Select Settings.
- Select the desired duration.

STARTING THE TRAINING PROGRAMME

- Select Training.
- Select a programme ▶.
- **To activate fragrancing for training: select** Air freshener.
- Select ■ to stop the training programme.

ⓘ The animations demonstrating the exercises are faded out when the vehicle is in motion and you only hear the instructions.

STARTING TIPS

- Select Tips.
- Select a body region ▶.
- Select ■ to stop playback of the tip.

ENERGIZING COACH

Function of the ENERGIZING COACH

REQUIREMENTS

- The ENERGIZING COACH Digital Extra is activated in the Mercedes-Benz Portal or the Mercedes-Benz App.
- The Mercedes-Benz ENERGIZING app is installed on the mobile phone to use the Digital Extras.

With ENERGIZING COACH you can evaluate the driving and driver situation. Depending on the situation, it offers recommendations for the start of an appropriate ENERGIZING COMFORT programme.

THE FOLLOWING PROGRAMMES COULD BE SUGGESTED:

- Vitality
  As an activating programme in monotonous driving situations or for long journey times, for example
  Information on the vitality program see (→ page 540).
- Joy
  As a balancing programme in demanding driving situations
  Information on the Joy programme see (→ page 540).
- Refresh
  As a refreshing programme when temperatures rise
  Information on the Refresh programme; see (→ page 540).
- Warmth
  As a warming programme when temperatures drop
  Information on the Warmth programme; see (→ page 540).

By connecting a Garmin fitness tracker, for example the Garmin vívoactive® 3, additional information can be entered into the evaluation for the recommendation of an ENERGIZING COMFORT programme. The additional information includes the stress level, that is calculated by the fitness tracker. The stress level is based primarily on the pulse rate.

REQUIREMENTS FOR THE INTEGRATION OF ADDITIONAL INFORMATION VIA A GARMIN FITNESS TRACKER:

- Your fitness tracker is connected with your Garmin account.
- Your Garmin account is linked to your Mercedes-Benz user account.

If you wear your Garmin fitness tracker at night also, the sleep data is included in the evaluation of the ENERGIZING COACH.

REQUIREMENT FOR THE INTEGRATION OF THE SLEEP DATA:

- The Garmin fitness tracker is synchronised with the Garmin account before the beginning of the journey.

ⓘ If ATTENTION ASSIST determines an excessive lack of attention, ENERGIZING COACH makes no further suggestions. Further information about ATTENTION ASSIST (→ page 405).

Calling up the ENERGIZING COACH display

Requirements

- The fitness tracker is connected with your Garmin account.
- Your Garmin account is linked to your Mercedes-Benz user account in the Mercedes-Benz ENERGIZING app.
- The mobile phone is connected to the multimedia system (→ page 583).
- You are logged in with your user profile both in the vehicle and in the Mercedes-Benz ENERGIZING app.

Multimedia system:

→ ⌂ » Apps » ENERGIZING COACH

▶ Your current pulse as well as an evaluation of your pulse for the last 30 minutes driving time are shown.

A corresponding fault message is shown if there is no mobile phone connected or no pulse can be sent to the system for an extended period.

ⓘ Only pulse values in the range of 30 - 140 (possibly 150) bpm are shown on the central display. The pulse values have no medical validity but are only informative in nature and are therefore also not required to be accurate.

ⓘ Only pulse values which fall into the range from 30 - 140 (possibly also 150) bpm will be shown on the media display. The pulse values have no medical validity but are only informative in nature and are therefore also not required to be accurate.

Navigation

Switching on navigation

Multimedia system:

Navigation

- Alternatively, switch on the MBUX Voice Assistant (→ page 489).
- Switch to navigation.
  The map appears.

> If you want to switch on navigation using either the NAVI MAP button or a search result from the global search and the Activating navigation. Please wait... message appears on the media display, navigation is not installed. You can have the navigation system retrofitted at a Mercedes-Benz Service Centre.

Navigation overview

DIGITAL MAP

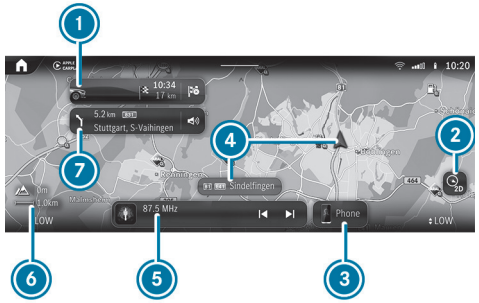

1. Navigation module (reduced view)
   Route guidance active:
   The navigation module shows the information relevant to the route in the zoomed-out view, e.g. the destination or a traffic delay
   ⊗ Ends the current route guidance
   Tapping opens the navigation module and displays the route overview (→ page 553)
2. Sets map orientation and map type
3. Calls up the telephone menu
4. Current vehicle position (vehicle symbol or arrow)
5. Calls up entertainment applications

6 Elevation and map scale (⟶ page 571)

7 Navigation window shows the next driving manoeuvre (zoomed out view) or the route monitor (zoomed in view)

Route guidance active: route monitor shows, e.g. route sections, upcoming driving manoeuvres with lane recommendations, destination, traffic delays, 3D images at motorway exits, online content

PRESSING 2 SEVERAL TIMES CHANGES THE MAP ORIENTATION IN THIS ORDER:

- 2D and to the north
- 2D and direction of travel
- 3D and direction of travel
- Map with complete route

ⓘ If the map is moved, the map switches between 3D direction of travel and 2D north orientation.

THE FOLLOWING MAP TYPES 2 ARE AVAILABLE:

- Daytime display
- Night-time display
- Satellite map

ⓘ If you notice a problem with the digital map, you can report it at https://mapfeedback.here.com/#/report.

Destination entry

NOTES ON DESTINATION ENTRY

⚠ **WARNING**
Risk of distraction from operating integrated communication equipment while the vehicle is in motion

If you operate communication equipment integrated in the vehicle when driving, you could be distracted from the traffic situation. This could also cause you to lose control of the vehicle.

► Only operate this equipment when the traffic situation permits.

► If you cannot be sure of this, stop the vehicle whilst paying attention to road and traffic conditions and operate the equipment with the vehicle stationary.

You must observe the legal requirements for the country in which you are currently driving when operating the multimedia system.

ENTERING A POI OR ADDRESS

Requirements

- **For the online search:**
  - There is an Internet connection.
  - Digital Extras are available.
  - You have created a Mercedes me ID.
  - The vehicle is linked to the Mercedes me ID and you have accepted the terms of use.
  - Further information can be found at: https://www.mercedes.me

- The Digital Extra is available and has been activated.

ⓘ If Online Search is not available, the search is performed using the data of the digital map.

Multimedia system:

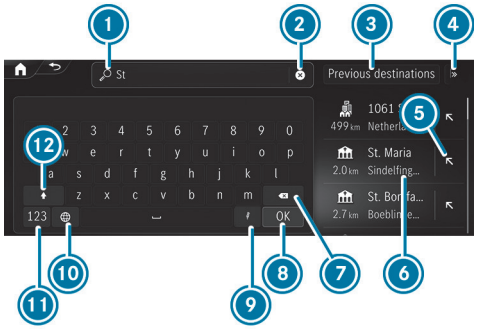

Example: entering a POI or address

1. Input line with current input
2. Deletes an entry
3. Selects previous destinations
4. Displays and selects additional destination searches
5. Adopts the search result in the input line and continues the search
6. Search result
7. Deletes the last character entered
8. Hides the keypad
9. Activates voice input
10. Sets the written language
11. Switches to digits and special characters
12. Switches to upper-case or lower-case letters

▶ Enter the destination. The entries can be made in any order.
The search results are displayed in a list.

ⓘ Online search results for POIs may contain additional information, for example opening times and ratings. The information is provided by an online map service.
This online function is not available in all countries.

THE FOLLOWING ENTRIES CAN BE MADE, FOR EXAMPLE IN ①:

- Town, street, house number or street, town
- Postcode
- POI name or POI category, e.g. Restaurants
- Town, POI name
- Contact name
- Geo-coordinates (⟶ page 549)

▶ Hide the keyboard with OK.

▶ Select the destination in the list.
The following menu shows the selected destination with the address information and a corresponding map section.
The menu enables the route to be calculated.

SELECTING PREVIOUS DESTINATIONS

Multimedia system:

Navigation

- Select Previous destinations.
- Select the destination.
  The following menu enables the route to be calculated.

> You can save a destination as a favourite (→ page 563).

SELECTING A POI

Requirements:

- **For use of personal POIs:** a USB device is connected with the multimedia system.
- Personal POIs with the GPS Exchange format (.gpx) have been saved in the PersonalPOI folder on the USB device.

Multimedia system:

Navigation

- Select POIs.
- Select one of the displayed quick-access categories, e.g. P.
- Select the POI.
  The following menu enables the route to be calculated.

or

- Select All categories or Personal POIs (see requirements).
- Select the category.
- Select the POI.
  The following menu enables the route to be calculated.

SETTING A SEARCH FILTER AFTER SELECTING A POI CATEGORY

THE PRESET SEARCH POSITION DEPENDS ON THE STATUS OF THE ROUTE GUIDANCE:

- If route guidance is not active, In the vicinity is searched.
- If route guidance is active, Along the route is searched.

- When the search results are displayed, select Filter.
- Select the search position, e.g. In the vicinity.
- If a route with intermediate destinations already exists and Near destination has been selected in the search filters, the destination is selected for the search.

or

- Select the desired travelling time to the point of interest.
- Select Search results.

CONFIGURING CATEGORIES FOR QUICK-ACCESS

THE CATEGORIES ARE DISPLAYED:

- As symbols after calling up the destination entry via
- As a list after calling up All categories

- In the POI menu, select All categories.
- Select ☆ or ★ for a category.
  Tapping on ☆ adds the category.
  Tapping on ★ removes the category.
- Use ↩ to change back.
  The new categories are shown after the destination entry is called up the next time.

ⓘ If all available quick-access positions are full, select the category to be replaced.

CHANGING THE ORDER OF QUICK-ACCESS CATEGORIES

- In the POI menu, press and hold a category for quick access.
- Tap on the arrows next to the selected category.
  The arrows for the other categories are greyed out.
- Drag the category up or down.
- Select ✓.

DELETING QUICK-ACCESS CATEGORIES

- In the POI menu, press and hold a category for quick access.
- Select ★ for the chosen category.
- Select Delete.
- Select ✓.

CHANGING CATEGORIES FOR PERSONAL POIS

- Select Personal POIs.
- Press on a category as long as is necessary until a menu appears.
- Select Change name and enter a name.
- Select Change icon and select a symbol.
- Select Delete and confirm the prompt with Yes.

SELECTING A CONTACT FOR DESTINATION ENTRY

Requirements:

- A mobile phone is connected to the multimedia system (→ page 583).
- The contacts from the mobile phone have been downloaded .
- The contact has a navigable address.
- The address data can be located on the digital map.

Multimedia system:

→ ⌂ ▸▸ Navigation ▸▸ 🔍

- Enter a contact in the entry line.
- Select the address.
  The following menu enables the route to be calculated.

ⓘ Alternatively, after calling up the destination entry, you can enter the name of a contact in the search field.

ENTERING GEO-COORDINATES

Multimedia system:

Navigation

- Enter the geo-coordinates as latitude and longitude.

EXAMPLES OF INPUT FORMATS:

- 47°58'11"N 7°57'25"E (degrees, minutes and seconds)
- 47.969722 7.956944 (decimal degrees)

- Confirm the entry.

  The following menu enables the route to be calculated.

SELECTING A DESTINATION ON THE MAP

Multimedia system:

Navigation

- If necessary, move the map (→ page 570).
- Press and hold on the map.

  Available destinations are displayed.

or

- Briefly press on a POI symbol.

  The POI is selected. If there are several POIs at this map position, a list appears.
- Select the destination in the Selected objects list.

  The following menu enables the route to be calculated.

SELECTING A DESTINATION FROM FAVOURITES

Requirements:

- Destinations are saved as favourites.
- Save a previous destination or a destination suggestion as a favourite (→ page 563).

Multimedia system:

Navigation

- Select Favourites.
- Select a favourite.

  The route is calculated in the following menu.

ADDRESSES FOR HOME AND WORK ARE ALREADY SET

- Select Home or Work.

  The following menu enables the route to be calculated.

ADDRESSES FOR HOME AND WORK ARE NOT YET SET

- Select Home or Work.

  The prompt No "Home" address available. Set address now? appears, for example.
- Select Yes.
- Search for or select the address.
- Select Save.

DELETING FAVOURITES

- Select ••• for a favourite.
- Select Delete.

or

- Select Delete all.

► Confirm the prompt.

When all the favourites have been deleted, Add favourite is available, for example.

Route

CALCULATING A ROUTE

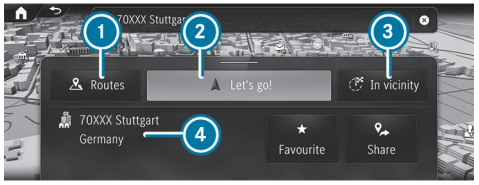

Example: detailed display

1. Calls up alternative routes
2. Calculates the route and starts route guidance
3. Selects a point of interest in the vicinity of the destination
4. Destination address
   The detailed display can contain additional entries such as online content

The route is calculated once the destination has been selected.

► Select one of the options.

CALLING UP ALTERNATIVE ROUTES

► Select Routes.

► Select an alternative route (→ page 555).

STARTING ROUTE GUIDANCE

► Select Let's go!.

CALLING UP THE DETAILED DISPLAY WITH DESTINATION ADDRESS

► Pull the bar above 2 upwards.

Depending on the destination selection and availability, online content, for example ratings and weather information, is shown.

If the destination is in a different time zone, a message is displayed.

► **To share a destination:** select Share.

This option allows you to scan the displayed QR code.

► **To save a destination as a favourite:** select Favourite and then an option.

► **To call up an Internet address:** if a web address is available, select www.

► **To call the destination:** if a telephone number is available, select Call.

SEARCHING FOR POIS IN THE VICINITY OF THE DESTINATION SHOWN

► Select In the vicinity.

► Search using categories, enter a search entry or search for a personal POI (→ page 547).

ADDING AN INTERMEDIATE DESTINATION TO THE EXISTING ROUTE OR STARTING A NEW ROUTE GUIDANCE

► Select Add.

The selected destination address is set as the next intermediate destination. Route guidance begins.

► **There are already four intermediate destinations:** confirm the prompt with Yes and select an intermediate destination in the route overview (→ page 553), that should be overwritten with the new intermediate destination.

or

► Select [🏁] Replace.

The selected destination address is set as a new destination. Route guidance begins.

ⓘ **IF YOU CALL UP THE MENU DURING ROUTE GUIDANCE, MORE OPTIONS ARE AVAILABLE:**

- To change the order of destinations, select Move (⟶ page 554).
- To delete the destination, select Delete (⟶ page 554).
- To cancel route guidance, select Cancel route guidance.

SELECTING A ROUTE TYPE

Multimedia system:

→ [⌂] ▸▸ Navigation ▸▸ [⚙] ▸▸ Route

USING TRAILER MODE AND ONLINE ROUTES

The route is calculated as a fast route with a short journey time.

Trailer mode is available if a trailer has been coupled with the vehicle. If available, you can select online routes.

ⓘ Trailer mode and online routes are not available in all countries and for all vehicles.

► Select Trailer mode.

A prompt is shown in the multimedia system.

► Confirm the prompt.

The arrival time at the destination takes into account a reduced driving speed with trailer.

► **To use online routes:** switch on the option.

TAKING TRAFFIC INFORMATION FOR THE ROUTE INTO ACCOUNT

► Select Dynamic route guidance [>].

► Select one of the options.

EXPLANATION OF THE OPTIONS:

- Automatic

  Traffic reports via Live Traffic Information are taken into account (⟶ page 563).

  Live Traffic Information and FM home screen are not available in all countries.
- After asking

  A prompt appears when a new route is detected with a shorter journey time based on traffic reports. You can continue to use the current route or use the dynamic route instead (⟶ page 567).
- Off

  No traffic reports are taken into account for the route.

CALCULATING ALTERNATIVE ROUTES

Multimedia system:

→ [⌂] ▸▸ Navigation ▸▸ [⚙] ▸▸ View

► Activate Overview of route after start.

Alternative routes are calculated for every route.

SELECTING ROUTE OPTIONS

Multimedia system:

→ [⌂] ▸▸ Navigation ▸▸ [⚙] ▸▸ Route ▸▸ Avoid options

AVOIDING OR USING ROUTE SECTIONS, E.G. MOTORWAYS OR FERRIES

► Activate or deactivate the avoid option.

Avoid: the option is activated. The route avoids motorways, for example.

Use: the option is deactivated. The route takes motorways into consideration, for example.

ⓘ The selected route options cannot always be taken into account. Therefore, a route may include a ferry, for instance, even though the Avoid ferries avoid option is enabled. A message appears and you will hear a corresponding message.

AVOIDING OR USING TOLL ROADS

The use of toll roads requires a usage fee (toll).

- ► Select Toll roads [>].
- ► Activate or deactivate Avoid all.

  If the option is activated, the route avoids toll roads.

  If the option is deactivated, the route takes toll roads into account.

or

- ► Select an option for Payment by cash or card or Electronic billing.

  Avoid: the route avoids toll roads with the selected method of payment.

  Use: the route takes into account roads that require a toll corresponding with the payment type selected.

AVOIDING OR USING ROADS REQUIRING A SPECIAL TOLL STICKER

A vignette allows for the use of a route network for a limited time period.

- ► Select Avoid vignette roads [>].
- ► Activate or deactivate Avoid all.

or

- ► Switch individual countries on or off in the list.

  Avoid: the option is activated. The route avoids roads requiring a special toll sticker in the selected countries.

  Use: the option is deactivated. The route takes into account roads in the selected country which require you to pay a time-based fee (vignette).

ⓘ These route options are not available in every country.

AVOIDING OR USING AREAS WITH LOW EMISSION ZONES

ⓘ The function is available when there is an active internet connection.

- ► Activate or deactivate Area with low emission zones.

  Avoid: the option is activated. The route avoids all low emission zones restricted for the vehicle. These are displayed in red on the map.

  Use: the option is deactivated. The restricted low emission zones for the vehicle are passed through on the route. A warning is displayed before you drive into a low emission zone.

AVOIDING AREAS

- ► Select Avoid areas [>] (→ page 572).

SELECTING NOTIFICATIONS FOR THE ROUTE

Requirements:

- **For an audible indication when approaching a personal POI:** the USB device contains personal POIs.
- The USB device is connected with the multimedia system.
- The category in which the personal POI belongs is activated.

Multimedia system:

Navigation ▶▶ Messages & tones

SWITCHING NAVIGATION ANNOUNCEMENTS ON OR OFF

▶ Activate Reduced messages.

If a driving instruction is available for a simple change in direction, you hear a brief announcement, e.g. "turn right in 200 m". The number of driving instructions along the route is minimised.

▶ Activate Detailed messages.

If a driving instruction is available and there is a complex driving situation, you hear supplementary information, e.g. "In 200 m turn right and continue to follow the major road". Additional driving instructions are issued for the route, for example on turning major roads.

▶ Activate Announce street names.

The name of the street into which the vehicle should turn is announced.

ⓘ This option is not available in all countries and languages.

SWITCHING TRAFFIC ANNOUNCEMENTS ON OR OFF

▶ Activate or deactivate Announce traffic warnings.

If available, traffic warnings are announced, e.g. before the end of traffic jams that pose a risk.

AUDIBLE INDICATION WHEN APPROACHING A PERSONAL POI

▶ Select Personal POIs.

▶ Activate a category.

When approaching a personal POI in the selected category an audible indication will be issued.

DISPLAYING THE ROUTE OVERVIEW

Requirements

- A destination is entered.

Multimedia system:

Navigation

Example: route guidance is active

1. To enter an address or POI
2. Destination and time of arrival

   Beneath this, the current distance to the destination and the chequered flag
3. Alternative routes
4. To search for parking
5. To switch the traffic information display on or off
6. To make settings for View, Messages & tones and Route

When route guidance is active, the destination and entered intermediate destinations are shown.

DEPENDING ON THE ROUTE, TRAFFIC SITUATION AND AVAILABLE DATA, FURTHER INFORMATION IS DISPLAYED:

- Name, destination address

- Symbols for intermediate destination and destination
- Phone number (if available)
- Web address (if available)
- Traffic information

The route can include up to four intermediate destinations.

▶ Select one of the options.

PLANNING ROUTES

Multimedia system:

Navigation

▶ Enter the intermediate destination (→ page 43).

After entering the destination and new calculation of the route, the route overview is shown again. The route contains a new intermediate destination.

ⓘ If there are already four intermediate destinations, delete an intermediate destination (→ page 554).

EDITING A ROUTE WITH INTERMEDIATE DESTINATIONS

Requirements:

- The destination and at least one intermediate destination have been entered.

Multimedia system:

Navigation

CHANGING THE ORDER OF THE DESTINATIONS

▶ In the route overview, press and hold on a destination.

▶ Move the destination with ◀ or ▶.

▶ Tap on ✓.

The editing mode is ended.

DELETING A DESTINATION

▶ In the route overview, press and hold on a destination.

▶ Tap on 🗑.

The editing mode is ended.

DISPLAYING THE ROUTE LIST

Multimedia system:

Navigation

▶ Tap on navigation window ⑦ on the digital map (→ page 544).

Example: route list

① Upcoming manoeuvre with turning arrow, distance to manoeuvre, street number, street name

Switches on navigation announcements

Switches off navigation announcements

Including the following route sections on the route to the destination

2 Current vehicle position

The route sections are displayed in the navigation window. The route list is updated during the journey.

> Motorway information shows the available service facilities. After selecting symbols, e.g. for car parks, service areas or motorway exits, the POI is adopted as an intermediate destination or destination.

- Swipe up or down.
- Select a route section.
  The map section is displayed.
- **To return to vehicle position:** select Current position.

SELECTING AN ALTERNATIVE ROUTE

Requirements:

- A route has been created.
- The Overview of route after start option is switched on (⟶ page 551).

Multimedia system:

Navigation ▶▶ Other routes

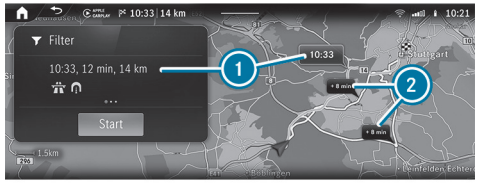

Example: alternative routes

1 Original route is highlighted

2 Alternative routes with indication of the difference in driving time

> In 2 a faster route may also be shown that is considerably longer.

THE FOLLOWING ROUTE INFORMATION IS DISPLAYED:

- Driving time
- Time of arrival
- Distance to the destination
- Avoid options based on the set route options
- Driving time saved or lost compared with the original route

- When the alternative routes have been calculated, display the route in the navigation window by swiping to the right or left.

CHANGING ROUTE TYPE

- Select Filter.

- Switching the route type on or off.

AVOIDING OR USING ROUTE OPTIONS

- Select Filter.
- Switch the route options on or off (→ page 551).
- Confirm the settings with Finished.
- **To start route guidance to the alternative route:** select Start.
- **To select an alternative route on the map:** touch any point on the alternative route.
  The alternative route is highlighted.

ACTIVATING A COMMUTER ROUTE

Requirements:

- You have created a profile (→ page 515).
- The Allow destination suggestions option is switched on (→ page 532).
- The Commuter route option is switched on.
- The multimedia system has gathered sufficient data in order to show destination suggestions.
- Routes have been learned for these destination suggestions.
- Route guidance is not active.

ⓘ This commuter route is not available in all countries.

Multimedia system:

⟶ [⌂] ▸▸ Navigation ▸▸ [⚙] ▸▸ Route

- Activate Commuter route.
  The navigation system automatically detects that the vehicle is on a commuter route.
  For the daily commuter route, traffic incidents on the route are also reported when driving without active route guidance.
- **To select commuter route:** select Start.
  Route guidance begins without spoken driving instructions.

ⓘ A commuter route is suggested even with delays on the route.

- **To delete a commuter route:** select [×].

SWITCHING THE AUTOMATIC FILLING STATION SEARCH ON OR OFF

Multimedia system:

⟶ [⌂] ▸▸ Settings ▸▸ Vehicle

- Select Driving.
- Activate or deactivate Automatic filling station search.
  If Automatic filling station search is switched on, a notification appears in which the search for filling stations is started.

STARTING AN AUTOMATIC FILLING STATION SEARCH

Requirements:

- The automatic filling station search is activated (→ page 556) .

DRIVING SITUATION

The fuel level in the fuel tank reaches the reserve fuel level.

The following notification is shown in the media display: Tap here to search for filling stations.

- Confirm the notification.
  The automatic filling station search begins. The available filling stations along the route or in the vicinity of the vehicle's current position are displayed.

or

- Hide the notification via ⊗.
- Select a filling station.
  The address of the filling station is displayed.
- Calculate the route (→ page 550).
  The filling station is set as the destination or the next intermediate destination.
- **If there are already four intermediate destinations:** select Yes in the prompt.
  The filling station is entered in the route overview. Intermediate destination 4 is deleted. Route guidance begins.

STARTING THE AUTOMATIC SERVICE STATION SEARCH

Requirements:

- ATTENTION ASSIST is activated (→ page 405).
- You are driving on a motorway.
- There are service stations along the route section ahead.

DRIVING SITUATION

- Confirm the notification.
  The service station search starts. The available service stations along the route or in the vicinity of the vehicle's current position are displayed.
- Select a service station.
- Calculate the route with the service station as an intermediate destination or as a destination (→ page 550).
- **If there are already four intermediate destinations:** select Yes in the prompt.
  The selected service station is entered in the route overview at position 1. Intermediate destination 4 is deleted. Route guidance begins.

STARTING AND EDITING A STORED ROUTE

Requirements:

- A USB device with stored routes is connected with the multimedia system (→ page 610).
- The route is stored in the "Routes" folder with the GPS Exchange format (.gpx).

Multimedia system:

→ ⌂ ▶▶ Navigation ▶▶ 🔍

- Press the double arrow in the destination input line until Stored routes is displayed.
- Select Stored routes.

STARTING A SAVED ROUTE

- Select a route.

- Select Start: route guidance at start or Start: current location.
  Route guidance begins.

RENAMING A ROUTE

- Press on a route until a menu is shown.
- Select Rename.
- Enter the name.
- Select OK.

RECORDING AND STORING A ROUTE

Requirements:

- A USB device is connected with the multimedia system (→ page 610).

Multimedia system:

→ ⌂ ▸▸ Navigation ▸▸ 🔍

- Press the double arrow in the destination input line until Stored routes is displayed.
- Select Stored routes.

STARTING RECORDING

- Select Start recording.
  A white rectangle is displayed.
  The route is stored on the USB device.

STOPPING RECORDING

- Press the white rectangle.
- Select End recording.

Route guidance

NOTES ON ROUTE GUIDANCE

> ⚠ **WARNING**
> Risk of distraction from operating integrated communication equipment while the vehicle is in motion
>
> If you operate communication equipment integrated in the vehicle when driving, you could be distracted from the traffic situation. This could also cause you to lose control of the vehicle.
>
> - Only operate this equipment when the traffic situation permits.
> - If you cannot be sure of this, stop the vehicle whilst paying attention to road and traffic conditions and operate the equipment with the vehicle stationary.

You must observe the legal requirements for the country in which you are currently driving when operating the multimedia system.
Route guidance begins once a route has been calculated. The road and traffic rules and regulations always have priority over multimedia system driving instructions. Driving instructions are, for example navigation announcements, changes in direction and lane recommendations.

Changes in direction and lane recommendations are shown in the navigation window.

THE FOLLOWING DISPLAYS AND FUNCTIONS ARE ALSO AVAILABLE IN THE NAVIGATION WINDOW, FOR EXAMPLE:

- Route list
- Destination information

- Traffic information, e.g. length of traffic jam, delay
- Motorway facilities
- Car park search
- Emergency corridors

If you do not follow the driving instructions or if you leave the calculated route, a new route is calculated automatically.

If, for example, the route is diverted or the direction of a one-way road has been reversed, driving instructions may deviate from the actual traffic situation.

Alternatives may be offered during route guidance, e.g. before passing a motorway exit road. The additional driving time for the journey along the motorway exit is shown.

For this reason, you must always observe road and traffic rules and regulations during your journey as well as the prevailing traffic conditions.

The route can differ from the ideal route, for example in the event of roadworks or incomplete digital map data.

NOTES ON SATELLITE RECEPTION

The correct function of the navigation system depends amongst other things on reception of the satellite system used. In certain situations satellite reception can be impaired, malfunction or even not be possible, e.g. in tunnels or in multi-storey car parks.

CHANGING DIRECTION OVERVIEW

CHANGES OF DIRECTION ARE SHOWN IN THE FOLLOWING DISPLAYS:

- Detailed image of the junction
  The display appears when you drive into a junction.
- 3D image
  The display appears when driving on junction-free, multi-lane roads, for example on motorway exits and motorway interchanges.

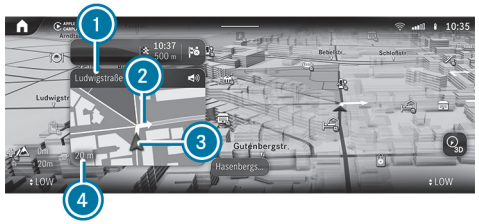

Example: detailed image of the crossing with upcoming changes of direction

1. Name of the street to turn into
2. Change of direction arrow (also on the map)
3. Current vehicle position
4. Current distance to the change of direction

Example: 3D image of the upcoming change of direction

1. Manoeuvre point
2. Change of direction arrow (also on the map)
   Larger map scales show change of direction points instead of change of direction arrows.
3. Current distance to the change of direction
4. Current vehicle position

THERE ARE THREE PHASES WHEN CHANGING DIRECTION:

- Preparation phase

  If there is enough time between the changes of direction, the multimedia system prepares you for the upcoming change of direction. A navigation announcement is issued, e.g. "Prepare to turn right".

  The navigation window shows: the direction information or the name of the road which is to be turned into as well as the distance to the change of direction.
- Announcement phase

  The multimedia system announces the upcoming change of direction, e.g. by announcing "Turn right in 300 m".

  When the Auto zoom map orientation is switched off (⟶ page 574), a detailed representation of the junction or a 3D image of the upcoming change in direction appears in the navigation window.
- Change-of-direction phase

  The multimedia system announces the imminent change of direction, e.g. by announcing "Now turn right".

  Example of 3D image: when the distance to manoeuvre point ① is shown with 0 m and the symbol for current vehicle position ④ has reached manoeuvre point ① the change in direction is carried out.

ⓘ Changes of direction are also shown in the driver display.

LANE RECOMMENDATIONS OVERVIEW

Example: lane recommendations

① Lane not recommended (grey arrow)

② Possible lane (white arrow)

③ Recommended lane (white arrow, blue background)

This display appears for multi-lane roads.

If the digital map contains the relevant data, lane recommendations are displayed in the navigation window.

EXPLANATION OF THE DISPLAYED LANES:

- Recommended lane

  In this lane, you will be able to complete both the next change of direction and the one after that.
- Possible lane

  In this lane, you will only be able to complete the next change of direction.
- Lane not recommended

  In this lane, you will not be able to complete the next change of direction without changing lane.

New lanes may be added during the change of direction. Bus lanes are also shown.

ⓘ Driving recommendations are also shown in the driver display.

USING MOTORWAY INFORMATION

When driving on the motorway, upcoming motorway facilities and available service facilities are shown in the route list. These include car parks, service stations or motorway exits with service POIs, for example.

The entries are sorted according to increasing distance from the current vehicle position.

- Select an entry.
- If several service facilities are available, select a service facility from the list.
  The destination address and the map position are shown.
- Calculate the route (→ page 550).

or

- Search for a POI in the vicinity.

or

- Use other functions, e.g. save the destination address of the service facility.

DESTINATION REACHED

Once the destination is reached, you will see the [🏁] chequered flag. Route guidance is finished. The navigation menu is shown.

When an intermediate destination has been reached, you will see the intermediate destination flag with the number of your [⚑] intermediate destination. Route guidance is continued.

SWITCHING NAVIGATION ANNOUNCEMENTS ON OR OFF

DEACTIVATING

- During a navigation announcement, press the [🔇] button on the steering wheel or controller in the centre console.
  The Spoken driving recommendations have been deactivated. message appears.

or

- In the route list for a driving manoeuvre select [🔊] (→ page 554).
  The symbol changes to [🔇].

ACTIVATING

- Press the button on the steering wheel or on the controller in the centre console again.

or

- In the navigation window, select [🔇] for an upcoming driving manoeuvre.
  The current navigation announcement is played.
  The symbol changes to [🔊].

SWITCHING NAVIGATION ANNOUNCEMENTS ON OR OFF DURING A PHONE CALL

- Press the [⌂] button on the steering wheel on the right.

or

- Tap on [⌂] in the media display.
- Select Settings.
- Select System.

- Select Audio.
- Select Navigation & traffic announcements.
- Activate or deactivate Driving recommendations during call.
- **To leave the menu:** select [↩].

ADJUSTING THE VOLUME OF NAVIGATION ANNOUNCEMENTS

Multimedia system:

[⌂] ▶▶ Settings ▶▶ System ▶▶ Audio ▶▶ Navigation & traffic announcements

- Select Driving recommendation vol..
- Set the volume.
- **To leave the menu:** select [↩].

ROUTE GUIDANCE IS ACTIVE

- During a navigation announcement, adjust the volume on the steering wheel or the volume rocker switch on the operating strip (→ page 513).

SWITCHING AUDIO FADEOUT ON OR OFF DURING NAVIGATION ANNOUNCEMENTS

- Press the [⌂] button on the steering wheel on the right.

or

- Tap on [⌂] in the media display.
- Select Settings.
- Select System.
- Select Audio.
- Select Navigation & traffic announcements.
- Activate or deactivate Audio fadeout during navigation announcements.
- **To leave the menu:** select [↩].

REPEATING NAVIGATION ANNOUNCEMENTS

Requirements:

- A route has been created.
- Route guidance is active.

Multimedia system:

[⌂] ▶▶ Navigation

- In the navigation window, select [🔊] for an upcoming driving manoeuvre.
- Select [🔇].
  The current navigation announcement is repeated.

CANCELLING ROUTE GUIDANCE

Requirements:

- A route has been created.
- Route guidance is active.

- Show the navigation menu.
- Select [🏁] in the navigation menu (→ page 544).

OVERVIEW OF OFF-ROAD STATUS DURING ROUTE GUIDANCE

Due to roadworks, for example, there may be differences between the data on the digital map and the actual course of the road. In such cases, the multimedia system will temporarily be unable to locate the vehicle's current

position on the digital map. The vehicle is off-road. Road not mapped will be shown. Route guidance may be restricted.

When the vehicle is back on a road known to the multimedia system, route guidance continues as normal.

Destination

SAVING THE CURRENT VEHICLE POSITION

Multimedia system:

→ [⌂] ▶▶ Navigation

- When the map is shown, tap on the [▲] current vehicle position.
- Select Store position.
- **To save as a favourite:** select Save as favourite.
- **To save as "Home" address:** select Home.
- **To save as "Work" address:** select Work.

EDITING THE PREVIOUS DESTINATIONS

Multimedia system:

→ [⌂] ▶▶ Navigation ▶▶ [🔍]

- Select Previous destinations.
- Select [•••] for the last destination.

SAVING THE LAST DESTINATION AS A FAVOURITE

- Press and hold on one of the previous destinations.
  A menu appears.
- **To save as a favourite:** select Save as favourite.
- **To save as "Home" address:** select Home.
- **To save as "Work" address:** select Work.

DELETING A PREVIOUS DESTINATION

- Select Previous destinations.
- Select [•••] for the last destination.
- Select Delete.

or

- Select Delete all.
- Confirm the prompt.
  When all the favourites have been deleted, Add favourite is available, for example.

Route guidance with current traffic reports

TRAFFIC INFORMATION OVERVIEW

Current traffic reports are received with the Digital Extra (subscription) Live Traffic Information.

When the subscription has expired then in selected countries FM RDS-TMC is available.

> ⓘ Live Traffic Information is not available in all countries.

Live Traffic Information registered in your Mercedes me ID (→ page 564). This secures the free-of-charge period of three years.

The Digital Extra updates the traffic situation at short, regular intervals via the internet connection.

Information on the vehicle's position is regularly sent to Mercedes-Benz AG. The data is immediately rendered anonymous by Mercedes-Benz AG and forwarded to the traffic data provider. Using this data, traffic reports relevant to the vehicle's position are sent to the vehicle. The vehicle acts as a sensor for the flow of traffic and helps to improve the quality of the traffic reports.

ⓘ There may be differences between the traffic reports received and the actual road and traffic conditions.

IF YOU DO NOT WISH TO TRANSMIT A VEHICLE POSITION, YOU HAVE THE FOLLOWING OPTION:

- You can deactivate the Digital Extra in your Mercedes me ID.
- You can have the Digital Extra deactivated at a Mercedes-Benz service centre.

ⓘ Further hazard warnings are received via the Car-to-X Digital Extra (⟶ page 567).

DISPLAYING INFORMATION FOR LIVE TRAFFIC INFORMATION

Requirements:

- The vehicle is equipped with Live Traffic Information.

Multimedia system:

⟶ ⌂ ▸▸ Apps ▸▸ Mercedes me ▸▸ My Digital Extras

▶ Select Live Traffic.

When the subscription for Live Traffic Information expires then, in selected countries, FM RDS-TMC is available.

REGISTERING LIVE TRAFFIC INFORMATION

Requirements

- The vehicle is equipped with Live Traffic Information.
- You have a Mercedes me ID.

▶ Create a Mercedes me ID at: https://www.mercedes.me. A valid email address is required for this.

▶ Register the vehicle using the vehicle identification number (VIN).

▶ Link the vehicle to your Mercedes me ID.
A code is sent to the multimedia system.

▶ Enter the code into the multimedia system.

▶ Accept the general and specific terms of use.

ⓘ Alternatively, you can have the connection completed at a Mercedes-Benz service centre.

EXTENDING A LIVE TRAFFIC INFORMATION SUBSCRIPTION

Requirements

- The vehicle is equipped with Live Traffic Information.
- You have a Mercedes me ID.

▶ Call up the Mercedes-Benz website.

- Call up the Mercedes me ID.
- Switch to the Mercedes-Benz Store via the linked vehicle.
- Select Live Traffic Information.
- Select the renewal period.
- Add the product to the shopping basket.
- Accept the general and specific terms of use.

  Live Traffic Information remains activated for the selected extension period. Activation begins on the date of extension.

DISPLAYING TRAFFIC INFORMATION ON THE MAP

Requirements:

- Traffic incidents and Free-flowing traffic are switched on (→ page 567).

Multimedia system:

→ [⌂] » Navigation

- If necessary, move the map (→ page 570).

THE MAP SHOWS THE FOLLOWING TRAFFIC INFORMATION DEPENDING ON THE ACTIVATED SETTINGS:

- Traffic incidents

  These are roadworks, road blocks and warning messages, for example.

  When route guidance is active, the symbols for traffic incidents will be shown in colour on the route. Off the route they are grey.
- Warning messages

  Warning messages are shown as the [⚠] symbol.

  Traffic safety information can be shown, e.g. if there are people on the carriageway.

  If the vehicle approaches a danger area, for example the end of a traffic jam in a dangerous position, the [⚠] symbol is shown on the map. If Announce traffic warnings is switched on and a message has been issued, an additional announcement is made.
- Traffic flow information:
  - Traffic jam (red line)
  - Slow-moving traffic (orange line)
  - Heavy traffic (yellow line)
  - Free-flowing traffic (green line)
- Display for traffic delays on the current route

  The smallest value for the display for traffic delays is a minute.

SHOWING TRAFFIC INCIDENTS ON THE ROUTE

Requirements:

- The Traffic incidents display is switched on (→ page 567).

Multimedia system:

→ [⌂] » Navigation

If there are traffic incidents on the route, these are shown on the map and in the route overview.

> ⓘ With the MBUX Voice Assistant you can inform yourself about traffic incidents on your route. Ask, for example How is the traffic on my route? or How is the traffic at home?. A voice output is given.

Example: traffic incidents on the route

1. Total delay or message that there are no delays along the route
2. Switches traffic information display on or off
3. Calls up settings for View, Messages & tones and Route

IF THERE ARE ANY DELAYS ALONG THE ROUTE, THESE ARE SHOWN IN THE ROUTE OVERVIEW TOGETHER WITH THE FOLLOWING INFORMATION:

- Traffic jam: red bar
- Slow-moving traffic: orange bar
- Heavy traffic: yellow bar
- For each section:
  - The delay
  - The length
  - The street name or the street number

ⓘ **DURING ACTIVE ROUTE GUIDANCE, THE TOTAL DELAY ON THE ROUTE IS ALSO DISPLAYED HERE:**

- in the navigation system in the navigation module
- in other applications in the status line at the top

Traffic incident symbols are shown in the route overview and in the map. A traffic incident symbol is, for example ⚠ for roadworks.
In the map several traffic incidents may be shown on top of each other. The traffic incident symbol shows a plus sign.
If available, the street number can be replaced by a street name or both the name and number.

ⓘ If a message about forming an emergency corridor has been issued, Emergency corridor is shown in the navigation window.

► To see all of the traffic incidents on the route, swipe to the right or left.
The route section is highlighted on the map.

► **To show detailed information in the route overview:** tap on a display in the route overview.
The detailed information is shown, for example the road section and the direction.

CALLING UP DETAILED INFORMATION ON THE MAP

► Tap on traffic flow information on the map, e.g. a red line for a traffic jam section.
The detail information is displayed.

► If several lines are shown on top of the other, then select an item of traffic flow information from the list.

SHOWING TRAFFIC INCIDENTS ON THE MAP

► Tap on a traffic incident symbol.
The detail information is displayed.

► **Several traffic incidents are in the immediate vicinity:** tap on the top traffic incident symbol and select from the list of traffic incidents.

SWITCHING THE TRAFFIC INFORMATION DISPLAY ON

Multimedia system:

Navigation

- Select View.
- Activate Traffic.
- Activate Traffic incidents and Free-flowing traffic.

  Traffic incidents, for example roadworks, local area reports (e.g. fog) and warning messages, are shown on the route.

ACCEPTING A DETOUR RECOMMENDATION AFTER A PROMPT

Requirements:

- After asking is switched on in the Dynamic route guidance menu (⟶ page 551).
- Route guidance is active.
- There are traffic reports for the current route.

If a new route with a shorter driving time is determined, the current and new routes will be shown.

If another application is active, a notification is hidden.

- Confirm the notification.
- **To accept the new route:** select Accept.
- **To maintain the current route:** select Keep to current route.

Car-to-X-Communication

OVERVIEW OF CAR-TO-X-COMMUNICATION

THE FOLLOWING REQUIREMENTS APPLY FOR THE DIGITAL EXTRA CAR-TO-X-COMMUNICATION:

- The vehicle is equipped with an MBUX multimedia system with navigation function.
- You have subscribed to the Digital Extra Live Traffic Information.
- The Digital Extra Car-to-X-Communication is activated in your Mercedes me ID.

ⓘ Car-to-X-Communication is available in selected countries.

The communication module automatically establishes an Internet connection once the vehicle is switched on. If there are any hazard warnings, they will be provided shortly thereafter. Depending on the mobile phone connection, provision takes place from within a second up to about a minute.

BENEFITS OF CAR-TO-X-COMMUNICATION:

- Hazards are automatically detected by the vehicle or can be reported by the driver. These are then sent to vehicles with Car-to-X-Communication in the immediate vicinity.
- If available, current details relating to hazard spots near the vehicle's current position are received.

  This gives you sufficient time to adapt your driving style to the traffic conditions.

The use of Car-to-X-Communication requires the regular transmission of vehicle data to Mercedes-Benz AG. The data is then immediately pseudonymised by Mercedes-Benz AG. The vehicle data is deleted after an appropriate amount of time has elapsed (several weeks) and is not stored permanently.

ⓘ Data which serves as identification is replaced during the pseudonymisation process. In this way, your identity is protected against access by unauthorised third parties.

DISPLAYING HAZARD WARNINGS

Multimedia system:

Navigation

If hazard warnings are available these can be shown as symbols on the map. The display depends on the settings for the Traffic incidents option.

- Set the option via ⚙ (→ page 567).

  If the option is activated, all of the symbols are shown.

  If the option is deactivated, the symbols are only shown when there is a hazard warning.

THE FOLLOWING HAZARDS MAY BE SHOWN ON THE MAP:

- Accidents and breakdowns
- Slippery roads, fog, crosswinds and heavy rain
- Hazards reported manually
- Vehicle with active hazard warning light
- Roadworks
- Additional hazards (if available)

ⓘ If Announce traffic warnings is switched off (→ page 552), voice output can indicate a danger area.

SENDING HAZARD WARNINGS

REPORTING HAZARDS MANUALLY

ⓘ Automatically detected hazard warnings are sent by the vehicle.

- When the map is shown, tap on the ▲ current vehicle position.

  The Position menu is shown.

- Select Report traffic incident.

  The Thank you for supporting accident prevention! message appears.

Route guidance with augmented reality

OVERVIEW OF ROUTE GUIDANCE WITH AUGMENTED REALITY

⚠ **WARNING**
Risk of accident and injury as a result of distraction, incorrect depiction or wrong interpretation of the display

The camera image of the augmented reality display is not suitable as a guide for driving.

- Always keep an eye on the actual traffic situation.
- Avoid extended observation of the camera image.

During route guidance with augmented reality a camera image with the real traffic scene is shown on the central display before a turning manoeuvre. The camera image includes additional information, for example arrows indicating a change of direction.

If the options are switched on and this additional information is available, road names and house numbers are displayed (⟶ page 569).

1. House number
2. Street name
3. Change of direction arrow

Route guidance with augmented reality will not be available in some situations, e.g. in the event of poor satellite reception or roads that have not been digitised.

Route guidance with augmented reality is not available in all countries.

ACTIVATING ROUTE GUIDANCE WITH AUGMENTED REALITY

> **WARNING**
> Risk of accident and injury due to imprecise positioning of additional information
>
> The additional information from the augmented reality display may be inaccurate and is not a substitute for observing and assessing the actual driving situation.
>
> ▶ Always keep an eye on the actual traffic situation when carrying out all driving manoeuvres.

Multimedia system:

⟶ [⌂] ▶▶ Navigation ▶▶ [⚙]

▶ Select View.

▶ Select Augmented reality video.

▶ Activate or deactivate Augmented reality video.

The camera's video image is shown on the media display before a turning manoeuvre. The video image includes additional information.

SHOWING PROPERTY INFORMATION FOR ROUTE GUIDANCE WITH AUGMENTED REALITY

Requirements:

- Augmented reality is activated (⟶ page 569).

Multimedia system:

⟶ [⌂] ▶▶ Navigation ▶▶ [⚙]

▶ Select View.

- Select Augmented reality video.
- Activate Street names and House numbers.
  During route guidance, the activated options are shown as additional information in the camera image.

Map and compass

SETTING THE MAP SCALE

Multimedia system:

Navigation

ZOOMING IN

- When the map is shown, tap twice quickly with one finger on the media display.

or

- Move two fingers apart on the media display.

ZOOMING OUT

- Tap with two fingers on the media display.

or

- Move two fingers together on the media display.

> You can set the unit of measurement of the map scale (→ page 532).

MOVING THE MAP

Multimedia system:

Navigation

- When the map is displayed, swipe in any direction with one finger on the media display.
- **To reset the map to the current vehicle position:** select Centre .

SWITCHING THE ROUTE OVERVIEW AFTER START ON OR OFF

Multimedia system:

Navigation

- Select View.
- Activate or deactivate Overview of route after start.
  If the option is enabled, the map shows the full route after route guidance is started and, if available, all alternative routes.

SELECTING POI SYMBOLS FOR THE MAP DISPLAY

Multimedia system:

Navigation

POIs include restaurants and hotels, for example. These are displayed as symbols on the map. Not all POIs are available in all countries.

Personal POIs are destinations which you have saved on a USB device, for example.

> The display of POI symbols on the map can be activated or deactivated as a favourite.

- Select View.
- Select POI symbols on map .

- Activate Hide all points of interest.

  When the option is switched on, the POI symbols for all categories are shown on the map according to the settings in the POI categories.

> ⓘ If the conditions are fulfilled, the POI symbols are shown with current online information (→ page 575).

SWITCHING DISPLAY OF CATEGORIES FOR QUICK-ACCESS ON OR OFF

- Switch a category on or off in the menu.

SELECTING CATEGORIES

- In the menu, select Other categories [>].
- Activate or deactivate Show all.

  When the option is switched on, the POI symbols for all categories are shown on the map.

or

- Select [>] the categories.
- Activate or deactivate the categories.

  The POI symbols for the selected categories are shown on the map.

SELECTING PERSONAL POI CATEGORIES

- In the menu, select Personal POIs [>].
- Select a category [>].
- Activate or deactivate Display on the map.
- **To issue a signal when approaching:** activate Visual warning and Acoustic notification.

RESETTING THE POI SYMBOL DISPLAY

- In the menu, select Reset POIs.

  The settings are reset to the standard settings.

SELECTING THE DISPLAY OF ADDITIONAL INFORMATION ON THE MAP

Multimedia system:

→ [⌂] ▸▸ Navigation ▸▸ [⚙]

- Select View.
- Select Show additional information.
- Switch the options on or off.

THE FOLLOWING OPTIONS ARE AVAILABLE:

- Current street

  If the option is enabled, it will be displayed in the navigation window.
- Scale

  If the option is switched off, the map scale is only displayed on the map when zooming.

  If the option is enabled, the map scale is permanently displayed on the map.

  The option also influences the display on the driver display.
- Altitude
- Next junction

  If the option is switched on and the journey continues without route guidance, the name of the next intersecting street will be displayed in the navigation window.

DISPLAYING THE MAP VERSION

Multimedia system:

Navigation

- Select View.
- Select Map data version.

  The detail information is displayed.

> You can update the map data with the Online Map Update Digital Extra (→ page 42).

> Information about new versions of the digital map can be obtained from a Mercedes-Benz service centre.

OVERVIEW OF AREA AVOIDANCE ON THE ROUTE

You can define areas along a route that you would like to avoid.

Motorways or multi-lane expressways that pass through an area to be avoided may be included in the route despite being blocked.

AVOIDING A NEW AREA FOR THE ROUTE

Multimedia system:

Navigation Route Avoid areas

- Select Avoid new area.

STARTING USING THE MAP

- Select Using map.

  A red rectangle appears. This designates the area that should be avoided.
- Move the map (→ page 570).
- Set the map scale (→ page 570).
- Select OK.

  The area is entered into the list.

STARTING USING DESTINATION SEARCH

- Select Via address entry.
- Enter the address (→ page 43).
- Select the destination in the list.

  The map appears. The area is saved.

CHANGING AN AREA TO BE AVOIDED

Multimedia system:

Navigation Route Avoid areas

- Select an area in the list.
- Select Edit.

CHANGING THE SIZE OF THE AREA

- Select OK.

  The area is entered into the list.

TAKING THE AREA FOR THE ROUTE INTO ACCOUNT

- Select the area in the list.
- Activate Avoid area.

  If route guidance is active, a new route is calculated.

  If there is no route yet, the setting is carried over to the next route guidance.

THE ROUTE CAN INCLUDE AN AREA THAT IS TO BE AVOIDED IN THE FOLLOWING CASES:

- The destination is located in an area that is to be avoided.
- The route includes motorways or multi-lane expressways which pass through an area to be avoided.
- There is no practical alternative route.

DELETING AN AREA TO BE AVOIDED

Multimedia system:

Navigation ▶▶ Route ▶▶ Avoid areas

DELETING AN AREA TO BE AVOIDED

▶ Select an area in the list.

▶ Select Delete.

▶ Confirm the prompt with Yes.

DELETING ALL AREAS TO BE AVOIDED

▶ If at least two areas to be avoided are set, select Delete all.

▶ Confirm the prompt with Yes.

OVERVIEW OF UPDATING THE MAP DATA

As the content of a digital road map has a short life, outdated data may have a negative effect on all navigation functions. For the best MBUX navigation experience, you should install all of the map updates offered by Mercedes-Benz.

THE FOLLOWING OPTIONS ARE AVAILABLE FOR THE UPDATE OF MAP DATA:

- Online map update
- Updates via the Mercedes-Benz Portal
- Update at a Mercedes-Benz service centre

Additional costs can be incurred in this process.

ONLINE MAP UPDATE

REQUIREMENTS:

- Digital Extras are available.
- You have a Mercedes me ID.
- The vehicle is linked to your Mercedes me ID and you have accepted the terms of use for the Digital Extra.

  Further information can be found at: https://www.mercedes.me
- The Online Map Update is available for your region.
- The Online Map Update has been activated.

ⓘ The Online Map Update is only available in certain countries.

Installation takes place in the background as an automatic map update.

The MBUX multimedia system installs all of the available map updates for the regions in which the vehicle is located or is moved.

The online map update is activated at the latest after the next time the vehicle is switched on.

UPDATES VIA THE MERCEDES-BENZ PORTAL

The map data for several regions can also be updated manually. Log in with your Mercedes me ID at: https://www.mercedes-benz.de/

Follow the menu path My Mercedes me ID > My vehicles > Selection of car > Online Map Update. Select the regions to be downloaded to a storage medium.

After the map data has been copied, connect the storage medium with your vehicle. Select the notification with information about a new version of the

map data and start the installation. After the MBUX multimedia system has been restarted, the updated map data is used.

OVERVIEW OF MAP DATA

If map data is reinstalled in a vehicle, no activation code needs to be entered.

For map data purchased as data storage media, the enclosed activation code must be entered after starting the installation.

Activation codes are only ever valid for one vehicle.

IN THE EVENT OF THE FOLLOWING PROBLEMS, PLEASE CONTACT A MERCEDES-BENZ SERVICE CENTRE:

- The multimedia system does not accept the activation code
- You have lost the activation code

DISPLAYING THE COMPASS

Multimedia system:

Navigation

- When the map is shown, tap on the current vehicle position until the Position menu is shown.
- Select Compass.

  THE COMPASS DISPLAY SHOWS THE FOLLOWING INFORMATION:

  - the current direction of travel with bearing (360° format) and compass direction
  - longitude and latitude coordinates in degrees, minutes and seconds
  - Number of satellites from which a signal can be received

The information is not available in every country.

SETTING THE MAP SCALE AUTOMATICALLY

Multimedia system:

Navigation

- Select View.
- Activate Auto zoom.

  When the option is switched on, the map scale is set automatically depending on your driving speed and the type of road.

> The automatically selected map scale can be changed manually. After a few seconds, this is automatically reset.
> When the option is activated, no detailed display of the junction or a 3D image is shown in the navigation window during an upcoming driving manoeuvre.

DISPLAYING THE SATELLITE MAP

Multimedia system:

Navigation

- Select View.
- Activate or deactivate Satellite map.

  WHEN SATELLITE MAP IS SELECTED, THEY ARE DISPLAYED AT THE FOLLOWING MAP SCALES:

  - On-board maps

    The satellite maps are displayed in map scales from 2 km.
  - Online maps

    The satellite maps are displayed in high-resolution map scales from 10 m.

When Satellite map is not selected, no satellite maps are displayed.

ⓘ The satellite maps for these map scales are not available in all countries.

DISPLAYING THE RANGE

Requirements:

- There is an Internet connection.
- Mercedes-Benz Connect is available.
- You have a Mercedes me ID.
- The vehicle is linked to the Mercedes me ID and you have accepted the Mercedes-Benz Connect terms of use.

  Further information can be found at: https://www.mercedes.me
- The service is available and has been activated.

Multimedia system:

→ [⌂] ▸▸ Navigation ▸▸ [⚙]

▶ Select View.

▶ Activate Range.

THE RANGE IS SHOWN ON THE MAP WITH THE FOLLOWING DISPLAYS:

- Vehicles with a petrol or diesel engine: the range is shown on the map with a green line around the current vehicle position.

When the lower reserve capacity is reached then the range display on the map is switched off.

ⓘ The range display on the map is not available in all countries.

DISPLAYING ONLINE MAP CONTENTS

Requirements:

- There is an Internet connection.
- Digital Extras are available.
- You have a Mercedes me ID.
- The vehicle is linked to your Mercedes me ID and you have accepted the terms of use for the Digital Extra.

  Further information can be found at: https://www.mercedes.me
- The Digital Extra is available and has been activated.

Multimedia system:

→ [⌂] ▸▸ Navigation ▸▸ [⚙]

▶ Select View.

▶ Switch on an online service, e.g. Weather.

Current weather information is displayed on the navigation map, e.g. temperature or cloud cover.

The service information is not shown in all map scales, e.g. weather symbols.

ⓘ The display of online map content is not available in all countries.

Parking service

NOTES ON THE PARKING SERVICE

NOTE
Vehicle damage due to failure to observe the maximum permissible clearance height

If the vehicle height exceeds the maximum permissible clearance height, the roof and other vehicle parts may be damaged.

- Please observe the indicated maximum clearance height.
- If the vehicle exceeds the permissible clearance height, do not drive in.
- Take the modified vehicle height in the case of roof superstructures or other carrier systems into account.

This service is not available in all countries.

SELECTING PARKING OPTIONS

NOTE
Vehicle damage due to failure to observe local information and parking conditions

The data is based on the information provided by the respective service providers.

Mercedes-Benz does not guarantee the accuracy of the information provided in relation to the car park or parking area.

- Always observe the local information and conditions.

Requirements:

- The "Navigation" service with the navigation services is activated in your Mercedes me ID.
- The scope of navigation services includes the Digital Extra "Parking for navigation".
- Parking is activated (→ page 577).

Multimedia system:

→ [⌂] ▶▶ Navigation

- Tap on [P] the map.

or

- In the route overview, select [P] Parking spaces (→ page 553).
- Select the search position and search filter, e.g. Near destination and Multi-storey car parks.

  The map shows car parks suited to the selected settings.

▶ Select a parking option.

THE FOLLOWING INFORMATION IS DISPLAYED (IF AVAILABLE):

- Destination address, distance from current vehicle position and arrival time
- Information on the car park, e.g.
  - Opening times
  - Parking charges
  - Current occupancy
  - Maximum parking time
  - **Maximum access height**

    The maximum access height shown by the parking service does not replace the need for observation of the actual circumstances.
- Available payment options (Mercedes pay, coins, bank notes, cards)
- Details on parking tariffs
- Number of available parking spaces
- Payment method (e.g. at parking meters)
- Services/facilities at the parking option
- Telephone number

▶ Calculate the route (⟶ page 550).

THE FOLLOWING FUNCTIONS CAN BE USED (IF AVAILABLE):

- Searching for POIs in the vicinity.
- Saving the destination.
- Placing a call at the destination.
- Sharing the destination via the QR code.
- Calling up the web address.
- Showing the destination on the map.

DISPLAYING PARKING OPTIONS ON THE MAP

Requirements:

- The "Navigation" service with the navigation services is activated in your Mercedes me ID.
- The scope of navigation services includes the Digital Extra "Parking for navigation".

Multimedia system:

⟶ ⌂ ▶▶ Navigation ▶▶ ⚙

▶ Activate Parking.

The parking options within the vicinity of the current vehicle position are shown.

Dashcam

NOTES ON THE DASHCAM

NOTE
Risk of legal consequences due to violation of legal regulations and data protection provisions

You are legally responsible for operation and use of the dashcam functions.

The legal requirements relating to operation and use of the dashcam can vary depending on the country in which the dashcam is operated.

This function is not permitted in all countries.

- ▶ Before using the dashcam, read up on the content of the legal regulations, in particular the data protection requirements in the respective country of use.
- ▶ Observe the legal regulations, in particular the data protection requirements.

OBSERVE THE FOLLOWING INSTRUCTIONS FOR SAFE OPERATION:

- Only use FAT32 or exFAT formatted USB storage devices.
- Use USB-IF certified USB storage devices.
  USB-IF is a non-profit corporation and stands for USB Implementers Forum. Based on the USB specification, USB-IF certifies, for example, USB versions, corresponding cables and plugs as well as energy supply processes via the USB interface.
- USB storage devices may be damaged if often or permanently overwritten at high speed. Mercedes-Benz recommends a high-quality external SSD drive.
  The abbreviation SSD stands for Solid State Drive.

The file size and therefore the duration of single recording is limited by the limitations of the USB flash drive format. So FAT32 formatted USB flash drives do not allow files larger than 4 GB, for example.
When the file size is reached, the recording stops and you receive a notification.

SELECTING A USB DEVICE FOR A VIDEO RECORDING WITH THE DASHCAM

Requirements:

- At least one USB device is connected with the multimedia system (⟶ page 610).

Multimedia system:

→ ⌂ ▶▶ Apps ▶▶ Dashcam

- ▶ Select the USB symbol.
- ▶ Select the USB device.

When USB devices contain multiple partitions, recorded video files are not always displayed in the recording list.
Mercedes-Benz recommends that you use USB devices with one partition.

STARTING OR STOPPING A LOOP RECORDING WITH THE DASHCAM

Requirements:

- For recording and saving a video file: a USB device is connected with the multimedia system (→ page 610).
- The vehicle is switched on.

Multimedia system:

Apps ▶▶ Dashcam

▶ If several USB devices are connected with the multimedia system, select a USB device (→ page 578).

If no USB device is selected, a selection is made automatically when recording starts.

▶ **To select recording mode:** select Loop recording.

Loop recording continuously records short video files. When the memory is full, recording is continued automatically. In doing so, the oldest video file is written over.

▶ **To start:** select Start recording.

The length of the recording is shown. The Do not remove the storage medium during recording. Before removing the storage medium, eject it first. message appears. The video file is stored on the USB device.

▶ **To end:** select End recording.

A MESSAGE MAY APPEAR IN THE FOLLOWING CASES:

- The camera is not functional, the Camera unavailable message appears.

  Have the camera checked in a Mercedes-Benz service centre.
- If the country border indication has been switched on (→ page 580).
- If an outdoor recording is started with the camera app during a dashcam recording, the dashcam recording pauses and resumes automatically after the camera recording is finished. A notification to this effect is displayed.

STARTING OR STOPPING INDIVIDUAL RECORDINGS WITH THE DASHCAM

Requirements:

- For recording and saving a video file: a USB device is connected with the multimedia system (→ page 610).
- The vehicle is switched on.

Multimedia system:

Apps ▶▶ Dashcam

▶ If several USB devices are connected with the multimedia system, select a USB device (→ page 578).

If no USB device is selected, a selection is made automatically when recording starts.

▶ **To select recording mode:** select Individual recording.

Individual recording stops recording when the memory limit is reached. An individual recording is automatically protected against being overwritten.

▶ **To start:** select Start recording.

The length of the recording is shown. The Do not remove the storage medium during recording. Before removing the storage medium, eject it first. message appears. The video file is stored on the USB device.

▶ **To end:** select End recording.

A MESSAGE MAY APPEAR IN THE FOLLOWING CASES:

- Individual recording: the memory is full or there are only a few minutes recording time available. The video recording stops or will be stopped imminently.

  Change the USB device or delete a video file.
- The camera is not functional, the Camera unavailable message appears.

  Have the camera checked in a Mercedes-Benz service centre.
- If the country border indication has been switched on (→ page 580).
- If an outdoor recording is started with the camera app during a dashcam recording, the dashcam recording pauses and resumes automatically after the camera recording is finished. A notification to this effect is displayed.

CONFIGURING DASHCAM SETTINGS

Requirements:

- A USB device is connected with the multimedia system (→ page 610).

Multimedia system:

→ [⌂] ▸▸ Apps ▸▸ Dashcam

▶ Select [⚙].

RECEIVING NOTIFICATIONS AFTER PASSING A BORDER CROSSING

▶ Activate Note on regional borders.

A message is shown if video is being recorded and the vehicle passes a border.

ⓘ This function is not available in all countries.

STARTING AUTOMATIC VIDEO RECORDING

▶ Select Automatic loop recording.

▶ Activate Automatic loop recording.

When the vehicle is started, video recording starts automatically.

ⓘ This function is not available in all countries.

Telephone

Telephony

TELEPHONE MENU OVERVIEW

1. Bluetooth® device name of the currently connected mobile phone/the mobile phones
2. Bluetooth® device name of the other currently connected mobile phone/of the mobile phone
3. Signal strength of the mobile phone network
4. Battery status of the connected mobile phone
5. Options
6. Messages
7. Calls up devices
8. Numerical pad
9. Starts contact search

BLUETOOTH® PROFILE OVERVIEW

Bluetooth® profile of the mobile phone	Function
PBAP (**P**hone **B**ook **A**ccess **P**rofile)	Contacts are automatically displayed in the multimedia system
MAP (**M**essage **A**ccess **P**rofile)	Message functions can be used
HFP (**H**ands **F**ree **P**rofile)	Wireless telephony is available

TELEPHONY OPERATING MODES OVERVIEW

DEPENDING ON THE EQUIPMENT, THE FOLLOWING TELEPHONE OPERATING MODES ARE AVAILABLE:

- One mobile phone is connected to the multimedia system via Bluetooth® (⟶ page 583).
- Two mobile phones are connected with the multimedia system via Bluetooth® (two phone mode) (⟶ page 583).
  - You can use all the functions of the multimedia system with both mobile phones.

ⓘ Irrespective of this, Bluetooth® audio functionality can by used with any mobile phone (⟶ page 611).

NOTES ON TELEPHONY

WARNING
Risk of distraction from operating integrated communication equipment while the vehicle is in motion

If you operate communication equipment integrated in the vehicle when driving, you could be distracted from the traffic situation. This could also cause you to lose control of the vehicle.

- Only operate this equipment when the traffic situation permits.
- If you cannot be sure of this, stop the vehicle whilst paying attention to road and traffic conditions and operate the equipment with the vehicle stationary.

WARNING
Risk of accident from operating mobile communication equipment while the vehicle is in motion

Mobile communication devices distract the driver from the traffic situation. This can also cause the driver to lose control of the vehicle.

- As a driver, only operate mobile communication devices when the vehicle is stationary.
- As a vehicle occupant, use mobile communication devices only in the designated area, e.g. in the rear passenger compartment.

When operating the multimedia system and mobile communication devices in the vehicle, observe the legal regulations of the country in which you are currently travelling.

WARNING
Risk of injury due to objects being stowed incorrectly

If objects in the vehicle interior are stowed incorrectly, they may slide or be thrown around and hit vehicle occupants. In addition, cup holders, open stowage spaces and mobile phone receptacles will not always be able to retain all objects that they contain in the event of an accident.

There is a risk of injury, particularly in the event of sudden braking or a sudden change in direction.

- Always stow objects such that they cannot be thrown around in such situations.
- Always make sure that objects do not protrude from stowage spaces, luggage nets or stowage nets.
- Close the lockable stowage spaces before starting a journey.
- Always stow and secure heavy, hard, pointed, sharp-edged, fragile or bulky objects in the boot/load compartment.

OBSERVE THE ADDITIONAL INFORMATION ON STOWING MOBILE COMMUNICATIONS DEVICES CORRECTLY:

- Loading the vehicle (→ page 619)
- Stowing and securing the mobile phone (→ page 285)

Further information can be obtained from a Mercedes-Benz service centre or at: https://www.mercedes-benz-mobile.com/

INFORMATION ON TELEPHONY

WHILE THE VEHICLE IS IN MOTION, THE FOLLOWING SITUATIONS, FOR EXAMPLE, CAN LEAD TO THE CALL BEING DISCONNECTED:

- there is insufficient network coverage in the area
- you move from one transmission/reception station to another and no communication channels are free
- the SIM card used is not compatible with the network available
- a mobile phone with "Twincard" is logged into the network with the second SIM card at the same time

The multimedia system supports calls in HD Voice® for improved speech quality. A requirement for this is that the mobile phone and the mobile phone network provider of the person you are calling support HD Voice®.

Depending on the quality of the connection, the voice quality may fluctuate.

CONNECTING A MOBILE PHONE

Requirements:

- Bluetooth® is activated on the mobile phone (see the manufacturer's Owner's Manual).
- Bluetooth® is activated on the multimedia system (→ page 529).

Multimedia system:

Phone ▶▶ Devices ▶▶ Devices

SEARCHING FOR A MOBILE PHONE

▶ Select Connect new device.

AUTHORISING A MOBILE PHONE

▶ Select a mobile phone.
A code is displayed in the multimedia system and on the mobile phone.

▶ **If the codes match:** confirm the code on the mobile phone.

ⓘ For older mobile phone models, enter a 1 to 16-digit number code on the mobile phone and on the multimedia system for authorisation.

ⓘ Up to 15 mobile phones can be authorised on the multimedia system.
Authorised mobile phones are reconnected automatically.

ⓘ The connected mobile phone can also be used as a Bluetooth® audio device (→ page 611).

CONNECTING A SECOND MOBILE PHONE (TWO PHONE MODE)

Requirements:

- At least one mobile phone is already connected to the multimedia system via Bluetooth®.

Multimedia system:

Phone ▶▶ Devices ▶▶ Devices

▶ Select Connect new device.

▶ Select the mobile phone.

- In some cases, if the query appears, confirm the selection of the mobile phone pair with the Device name 1 + Device name 2 option.

  The selected mobile phone is connected to the multimedia system.

INTERCHANGING MOBILE PHONES (TWO PHONE MODE)

Multimedia system:

Phone

Both mobile phones are shown individually in separate tabs.

- Select the tab with the desired mobile phone.

  Selecting the tab of a specific mobile phone displays the associated telephone contents.

  Selecting the other tab switches the view to the other telephone.

  The submenus in the telephone menu (e.g. contacts, call lists, messages) relate to the currently selected mobile phone with the exception of the telephone settings. In the telephone settings, settings can be made for both mobile phones.

CHANGING THE FUNCTION OF A MOBILE PHONE

Multimedia system:

Phone Devices Devices

ACTIVATING A FUNCTION

- Select a grey symbol in the line of a mobile phone.

  The corresponding function is activated.

DEACTIVATING A FUNCTION

- **A function is active:** in the line of a mobile phone, select the coloured symbol.

  The mobile phone is disconnected from the multimedia system.

- **Several functions are active:** de-select an active function in the line of one of the mobile phones.

  The corresponding function is deactivated.

REPLACING MOBILE PHONES

Multimedia system:

Phone Devices Devices

NO AUTHORISED MOBILE PHONE AVAILABLE:

- Select Connect new device.

- Select a mobile phone.
- **Newly authorised mobile phone:** confirm the number code on the mobile phone.

USING IN SINGLE TELEPHONE MODE

- Select Device name.

  A newly authorised mobile phone is connected in single telephone mode.

  If the mobile phone has already been authorised and connected in single telephone mode, it is connected again in single telephone mode.

  If a mobile phone is already authorised and has been connected in two phone mode with another mobile phone, a query may come, whether the mobile phone should in future be operated in single telephone mode or connected with another mobile phone in two phone mode.

- If required, confirm the query about operating mode (single telephone or two phone mode) by confirming the Device name option.

USING IN TWO PHONE MODE

- Select Device name 1 + Device name 2.

  A newly authorised mobile phone is connected with the selected mobile phone in two phone mode.

  If the mobile phone has already been authorised and connected in single telephone mode, it will be connected in future with the selected mobile phone in two phone mode.

  If the mobile phone was previously connected with another mobile phone, this connection is cancelled.

DISCONNECTING OR DELETING A MOBILE PHONE

Multimedia system:

Phone ▶▶ Devices

DISCONNECTING A MOBILE PHONE

▶ Select Disconnect.

If applicable, the mobile phone will be automatically reconnected when the vehicle is next started.

DELETING A MOBILE PHONE

▶ Select Devices.

▶ Select ••• in the line of the mobile phone.

▶ Select Delete device.

The mobile phone is deleted from the system.

USING THE MOBILE PHONE WITH NEAR-FIELD COMMUNICATION (NFC)

Requirements:

- NFC is activated on the mobile phone (see the manufacturer's operating instructions)
- The mobile phone's screen is switched on and unlocked (see the manufacturer's operating instructions)

CONNECTING A MOBILE PHONE

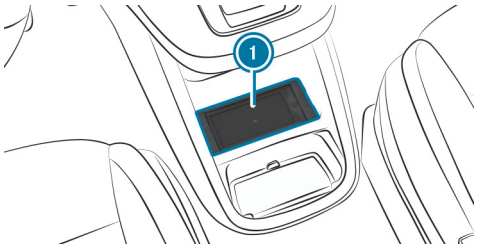

▶ Hold the NFC interface of the mobile phone (see the manufacturer's operating instructions) against mat 1 or place the mobile phone on mat 1 with the display facing upwards.

▶ Follow the additional prompts on the media system display to connect the mobile phone. Connect the mobile phone in single telephone mode (→ page 583). Connect the mobile phone in two phone mode (→ page 583).

REPLACING A MOBILE PHONE

▶ Hold the NFC interface of the mobile phone (see the manufacturer's operating instructions) against mat 1 in the front storage compartment.

▶ Follow the additional prompts on the media system display to replace the mobile phone in one or two phone mode (→ page 584).

▶ If required, confirm the prompts on your mobile phone (see the manufacturer's operating instructions).

ⓘ If the mobile phone is not charging, switch off NFC on the mobile phone (see the manufacturer's operating instructions).

Further information can be found at: https://www.mercedes-benz-mobile.com/

SETTING THE RECEPTION AND TRANSMISSION VOLUME

Requirements:

- A mobile phone is connected (→ page 583).

Multimedia system:

Phone ▶▶ Devices ▶▶ Devices

This function ensures optimal language quality.

ⓘ Please note that the respective mobile phone must be selected for adjustment of the reception and transmission volume.

- Select [•••] in the line of the mobile phone.
- Select Volume.
- Set the reception and transmission volume using Reception volume and Transmission volume.

Further information on the recommended reception and transmission volume: https://www.mercedes-benz-mobile.com/

SETTING THE RINGTONE

Multimedia system:

[⌂] ▶▶ Phone ▶▶ [⚙] ▶▶ Ringtones

- Set the ringtone.

ⓘ If the mobile phone supports the transfer of the ringtone, you will hear the ringtone of the mobile phone instead of that of the vehicle.

STARTING OR STOPPING MOBILE PHONE VOICE RECOGNITION

Requirements:

- At least one mobile phone is connected to the multimedia system (⟶ page 583).
- The tab with the mobile phone for which voice recognition should be started is selected (⟶ page 584).

STARTING MOBILE PHONE VOICE RECOGNITION

- Press and hold the [🎤] button on the multifunction steering wheel for more than one second.

  Voice recognition is started for the currently selected mobile phone.

STOPPING MOBILE PHONE VOICE RECOGNITION

- Press the [🔇] or [☎] button on the multifunction steering wheel.

ⓘ If a mobile phone is connected via Smartphone Integration, the voice recognition of this mobile phone is always started or stopped.

NOTE ABOUT CONTACT SUGGESTIONS

The multimedia system can show contact suggestions based on frequently used contacts, outgoing calls and text messages. For this, the Allow contact suggestions option must be switched on (⟶ page 532).

When you open the call list or the message menu, contacts which you can call or write to will be suggested to you. Suggestions will be shown in the Suggestions tab.

ⓘ The multimedia system does not use the content of messages for suggestions.

SELECTING OPTIONS FOR CONTACT SUGGESTIONS

Requirements:

- The Allow contact suggestions option is switched on (⟶ page 532).
- The multimedia system has gathered sufficient data in order to show contact suggestions.

Multimedia system:

Phone

- Select Call list or Contacts.
- Select Suggestions.
- Select ••• in the line of the suggested contact.

  THE FOLLOWING OPTION IS AVAILABLE FOR SELECTION:

  - Do not suggest now

Calls

TELEPHONE OPERATION

Multimedia system:

Phone

MAKING A CALL BY ENTERING THE NUMBERS

- Select .
- Enter a number.
- Select .

  The call is made.

ACCEPTING A CALL

- Select Accept.

REJECTING A CALL

- Select Reject.

ANSWERING A CALL WITH A MESSAGE

- Select Message.

ENDING A CALL

- Select .

PUTTING A CALL ON IN-CAR OFFICE'S TO-DO LIST

- Select Put call on In-Car Office's to-do list.

ACTIVATING FUNCTIONS DURING A CALL

THE FOLLOWING FUNCTIONS ARE AVAILABLE DURING A CALL:

- End call
- Micro. off
- Keypad (show to send DTMF tones)
- Add call
- Hands-free

  Transfer the call, e.g. to Front, Rear or All seats.
- Private mode

  Transfer the call to the telephone or headphones, for example.

- Select a function.

> ⓘ Observe that the functions and symbols can vary depending on the vehicle equipment.

CONDUCTING CALLS WITH SEVERAL PARTICIPANTS

Requirements:

- There is an active call (→ page 587).
- Another call is being made.

SWITCHING BETWEEN CALLS

► Select the contact.

The selected call is active. The other call is on hold.

ACTIVATING A CALL ON HOLD

► Select the contact of the call on hold.

CONDUCTING A CONFERENCE CALL

► Select Conference.

The new participant is included in the conference call.

ENDING AN ACTIVE CALL

► Select End call.

ⓘ On some mobile phones, the call on hold is activated as soon as the active call is ended.

ACCEPTING OR REJECTING A WAITING CALL

Requirements:

- There is an active call (⟶ page 587).

If you receive a call while already in a call, a message is displayed.

Depending on the mobile phone and mobile phone network provider you will hear a call waiting signal.

Alternatively, in two phone mode you will hear an acoustic signal when the call goes through to the other (not yet active) mobile phone.

► Select Accept.

The incoming call is active.

If only one mobile phone is connected with the multimedia system, the previous call will be put on hold.

If during a call you accept a call with the other mobile phone when in two phone mode then the existing call is ended.

or

► Select Message.

The incoming call is not accepted.

You answer with a message.

or

► Select Reject.

ⓘ This function and behaviour depends on your mobile phone network provider and the mobile phone (see the manufacturer's operating instructions).

USING THE INTERNATIONAL DIALLING CODE

Multimedia system:

Phone

► Press and hold "0" until a "+" appears in the selection field.

► Enter the numbers of the country code, regional code and the telephone number.

► Select .

The call is made.

Contacts

INFORMATION ABOUT THE CONTACTS MENU
The contacts menu contains all contacts from existing data sources, e.g. mobile phone or data storage medium.

DEPENDING ON THE DATA SOURCE, IT IS POSSIBLE TO SAVE/LOAD THE FOLLOWING NUMBER OF CONTACTS:

- Permanently saved contacts: 3,000 entries
- Contacts loaded from the mobile phone: 5,000 entries per mobile phone

FROM THE CONTACTS MENU, YOU CAN PERFORM THE FOLLOWING ACTIONS:

- Make a call, for example call a contact (⟶ page 590)
- Navigate (⟶ page 548)
- Compose messages
- Call up additional options (⟶ page 590)

Mobile phone contacts are automatically displayed when a mobile phone is connected to the multimedia system (⟶ page 583).

DOWNLOADING MOBILE PHONE FAVOURITE CONTACTS
If the mobile phone supports the function, the favourites of the mobile phone are automatically loaded and appear in the overview of the phone menu.

CALLING UP CONTACTS
Multimedia system:
Phone ▸▸ Contacts

THE FOLLOWING OPTIONS CAN BE USED TO SEARCH FOR CONTACTS:

- Searching by initials
- Searching by name
- Searching by phone number

▶ Enter characters into the search field.

▶ Select the contact.

A CONTACT CAN CONTAIN THE FOLLOWING DETAILS:

- Phone numbers
- Navigation addresses
- Internet address
- Email addresses
- Relationship (if set)

EDITING THE FORMAT OF A CONTACT'S NAME
Multimedia system:
Phone ▸▸

▶ Select Contacts.

▶ Select Name format.
▶ Select an option.

OVERVIEW OF IMPORTING CONTACTS

IMPORTING CONTACTS INTO THE CONTACTS MENU

Source	Requirements:
USB device	The USB device is connected with the USB port.
Mobile phone	One mobile phone is connected to the multimedia system via Bluetooth®. Contacts are available.

Note that the imported contacts remain in the vehicle and can be accessed at any time regardless of the connected mobile phones.

IMPORTING CONTACTS INTO THE CONTACTS MENU

Multimedia system:

Phone ▶▶ Contacts ▶▶ Import contacts

- Select a mobile phone <Device name>, from which the contacts should be imported.
- Select an option.

SAVING A MOBILE PHONE CONTACT

Multimedia system:

Phone ▶▶ Contacts

- Select in the line of the mobile phone contact.
- Select •••.
- Select Save.
- Select Yes.

  The contact saved in the multimedia system is identified by the MBUX symbol.

CALLING A CONTACT

Multimedia system:

Phone ▶▶ Contacts

- Select Search contacts.
- Enter characters into the search field.
- Select the contact.
- Select the telephone number.

  The number is dialled.

SELECTING FURTHER OPTIONS IN THE CONTACTS MENU

Multimedia system:

Phone ▶▶ Contacts

- Select in the line of the contact.
- Select •••.
- Select an option.

DELETING CONTACTS

Requirements:

- The contacts are saved in the vehicle.
- To delete an individual contact, this has been imported manually into the vehicle.

Multimedia system:

Phone

DELETING ALL CONTACTS

- Select .
- Select Contacts.
- Select Delete all MBUX contacts.
- Select an option.

DELETING A CONTACT

- Select Contacts.
- Select in the line of the contact.
- Select .
- Select Delete contact.
- Select Yes.

Call list

OVERVIEW OF THE CALL LIST

Depending on whether your mobile phone supports the PBAP Bluetooth® profile or not, this can have different effects on the presentation and functions of the call list.

IF THE PBAP BLUETOOTH® PROFILE IS SUPPORTED, THE EFFECTS ARE AS FOLLOWS:

- The call lists from the mobile phone are displayed in the multimedia system.
- When connecting the mobile phone, you may have to confirm the connection for the PBAP Bluetooth® profile.

IF THE PBAP BLUETOOTH® PROFILE IS NOT SUPPORTED, THE EFFECTS ARE AS FOLLOWS:

- The multimedia system generates a call list independently as soon as calls are made in the vehicle.
- The call list is not synchronised with the call lists in the mobile phone.

MAKING A CALL FROM THE CALL LIST

Multimedia system:

Phone

- Select Call list.
- Select an entry.

  The call is made.

SELECTING ADDITIONAL OPTIONS IN THE CALL LIST

Multimedia system:

Phone

- Select Call list.
- For contacts that are in the address book: select options.

  The contact details are called up.

DELETING THE CALL LIST

Multimedia system:

Phone <Device name> Devices

- Select Delete call list.
- Select Yes.

This function is only available if your mobile phone does not support the PBAP Bluetooth® profile.

Text messages

OVERVIEW OF THE MESSAGING FUNCTIONS

In the message menu you can receive text messages and create and send them with the help of the MBUX Voice Assistant.

If the connected mobile phone supports the Bluetooth® MAP profile, the message function can be used on the multimedia system.

You can obtain further information about settings and supported functions of Bluetooth®-capable mobile phones from a Mercedes-Benz Service Centre or at: https://www.mercedes-benz-mobile.com/

Some mobile phones require further settings after being connected to the multimedia system to activate the messaging functionality (see the manufacturer's Owner's Manual).

SETTING THE MESSAGE DISPLAY

Multimedia system:

Phone ▶▶ <Device name> ▶▶ ⚙ ▶▶ Devices

- Select Message display.
- Select On or Off.

READING MESSAGES

Multimedia system:

Phone ▶▶ <Device name> ▶▶

USING THE READ-ALOUD FUNCTION

A message list is shown.

- To read aloud, select the symbol at a conversation.
  The message is read aloud.

FORWARDING A MESSAGE

Multimedia system:

Phone ▶▶ <Device name> ▶▶

A message list is shown.

- Speak the voice command Forward message.
  You are guided by the voice dialogue.

CALLING A MESSAGE SENDER

Multimedia system:

Phone ▶▶ <Device name> ▶▶

A message list is shown.

- Select > next to a contact.
  The messaging history with the contact is opened.
- Select •••.
- Select Call.

USING TELEPHONE NUMBERS, URLS OR EMAIL ADDRESSES FROM A TEXT MESSAGE

Requirements:

- An Internet connection is available to call up a URL.

Multimedia system:

Phone ▶▶ <Device name> ▶▶

A message list is shown.

- Select [>] next to a contact.
  The messaging history with the contact is opened.
- Select a telephone number or a URL in the message.
  If a URL is selected the web browser opens.
  IF A TELEPHONE NUMBER IS SELECTED THE FOLLOWING OPTIONS ARE AVAILABLE:
  - Call
  - New message

or

- **If In-Car Office and the email function are available:** select an email address.
  In-Car Office opens.

ⓘ The availability of In-Car Office is country-dependent.

- Select an option.

DELETING A MESSAGE

Multimedia system:

[⌂] ▶▶ Phone ▶▶ <Device name> ▶▶ [✎]

A message list is shown.

- Select a contact.
- Press and hold on a message.
- **To delete the message:** select Delete.

Apple CarPlay®

OVERVIEW OF APPLE CARPLAY®

⚠ **WARNING**
Risk of distraction from information systems and communications equipment

If you operate information systems and communication devices integrated in the vehicle when driving, you could be distracted from the traffic situation. This could also cause you to lose control of the vehicle.

- Only operate this equipment when the traffic situation permits.
- If you cannot be sure of this, stop the vehicle whilst paying attention to road and traffic conditions and operate the equipment with the vehicle stationary.

You must observe the legal requirements for the country in which you are currently driving when operating the multimedia system.
iPhone® functions can be used via the multimedia system using Apple CarPlay®. They are operated using the touchscreen, Touch Control or Siri® voice control. You can activate voice control by pressing and holding the [🎤] button on the multifunction steering wheel.

ⓘ By briefly pressing the [🎤] button on the multifunction steering wheel you can continue to operate the multimedia system using the MBUX Voice Assistant (→ page 489).

Only one iPhone® at a time can be connected via Apple CarPlay® with the multimedia system.

Also for use of Apple CarPlay® with two phone mode, only one additional mobile phone can be connected using Bluetooth® with the multimedia system.

As access to the iPhone® is restricted by MBUX when an Apple CarPlay® session is active, not all MBUX functions (e.g. dialling from the address book) can be fully provided for the connected device. In this case use Apple CarPlay®.

The full range of functions for Apple CarPlay® is only available with an Internet connection.

The availability of Apple CarPlay® may vary according to the country.

The service provider is responsible for this application and the services and content connected to it.

Apple CarPlay® is a registered trademark of Apple Inc.

INFORMATION ON APPLE CARPLAY®

The Apple CarPlay® symbol in the status line switches within Apple CarPlay® to the last active display.

If route guidance is active on the multimedia system, it is closed when route guidance is started on the mobile phone.

CONNECTING AN IPHONE® VIA APPLE CARPLAY® (WIRED)

Requirements:

- The current version of your device's operating system is being used (see the manufacturer's Owner's Manual).

ⓘ For safety reasons, the first activation of Apple CarPlay® on the multimedia system must be carried out when the vehicle is stationary and the parking brake applied.

▶ Connect the iPhone® to a USB port on the multimedia system using a suitable cable (⟶ page 610).

When the application is connected for the first time, a message about data protection regulations appears.

▶ Select Accept & start if the application should be started.

or

▶ Open the device manager (⟶ page 583).
▶ Start Apple CarPlay® using the relevant symbol next to the device name.

ⓘ If applicable, a message about data protection regulations appears.

▶ If required confirm the use of Apple CarPlay® on your iPhone®.

EXITING APPLE CARPLAY®

▶ Select [⌂].

or

▶ Press the [⌂] button on the multifunction steering wheel (MBUX multimedia system).

ⓘ If Apple CarPlay® was not displayed in the foreground before disconnecting, the application starts in the background when reconnected. You can call up Apple CarPlay® using the Apple CarPlay® symbol in the status line.

CONNECTING AN IPHONE® VIA APPLE CARPLAY® (WIRELESS)

Requirements:

- The current version of your device's operating system is being used (see the manufacturer's operating instructions).
- Bluetooth® is activated on the device (see the manufacturer's operating instructions).
- The device is "visible" for other devices.

ⓘ For safety reasons, the first activation of Apple CarPlay® on the multimedia system must be carried out when the vehicle is stationary and the parking brake applied.

Multimedia system:

→ [⌂] ▶▶ Phone ▶▶ [⚙] ▶▶ Devices

▶ Connect the mobile phone using Bluetooth® (⟶ page 583).

When the application is connected for the first time, a message about data protection regulations appears.

▶ Select OK, start Apple CarPlay if the application should be started.

▶ If required confirm the use of Apple CarPlay® on your iPhone®.

ⓘ It is possible at any time to switch between a connection via Bluetooth® or Apple CarPlay® (wireless) in the device list.

ⓘ If you have already connected a mobile phone via Bluetooth®, you can connect another iPhone® via Bluetooth® to use Apple CarPlay® via the device manager.

EXITING APPLE CARPLAY®

▶ Select [⌂].

or

▶ Press the [⌂] button on the Touch Control (MBUX multimedia system).

ⓘ If Apple CarPlay® was not displayed in the foreground before disconnecting, the application starts in the background when reconnected. You can call up Apple CarPlay® using the Apple CarPlay® symbol in the status line.

CALLING UP APPLE CARPLAY® SOUND SETTINGS

Multimedia system:

→ [⌂] ▶▶ Settings ▶▶ System ▶▶ Audio

▶ Select the sound settings.

ENDING APPLE CARPLAY®

▶ Select the Apple CarPlay® symbol in the device manager (telephone, media) that is next to the device name of the iPhone®.

ⓘ Select the Apple CarPlay® symbol in the device manager in the telephone or media applications if Apple CarPlay® should be restarted.

ⓘ If Apple CarPlay® was not displayed in the foreground before disconnecting, the application starts in the background the next time it is started automatically. You can call up Apple CarPlay® using the relevant symbol in the status line.

Android Auto

ANDROID AUTO OVERVIEW

⚠ **WARNING**
Risk of distraction from information systems and communications equipment

If you operate information systems and communication devices integrated in the vehicle when driving, you could be distracted from the traffic situation. This could also cause you to lose control of the vehicle.

- ▶ Only operate this equipment when the traffic situation permits.
- ▶ If you cannot be sure of this, stop the vehicle whilst paying attention to road and traffic conditions and operate the equipment with the vehicle stationary.

You must observe the legal requirements for the country in which you are currently driving when operating the multimedia system.
Mobile phone functions can be used with Android Auto using the Android operating system on the multimedia system. It is operated using the touchscreen, Touch Control or voice control. You can activate the voice control by pressing and holding the button on the multifunction steering wheel.

ⓘ By briefly pressing the button on the multifunction steering wheel you can continue to operate the multimedia system using the MBUX Voice Assistant (→ page 489).

Only one mobile phone at a time can be connected via Android Auto to the multimedia system.

Also for use of Android Auto with two phone mode, only one additional mobile phone can be connected using Bluetooth® with the multimedia system.

The full range of functions for Android Auto is only possible with an Internet connection.

The availability of Android Auto and Android Auto apps may vary according to the country.

The service provider is responsible for this application and the services and content connected to it.

INFORMATION ON ANDROID AUTO

The Android Auto symbol in the status line switches within Android Auto to the last active display.

If route guidance is active on the multimedia system, it is closed when route guidance is started on the mobile phone.

CONNECTING A MOBILE PHONE VIA ANDROID AUTO (WIRED)

Requirements:

- The mobile phone supports Android Auto from Android 5.0.
- The current version of the Android Auto app is installed on the mobile phone.

- In order to use the telephone functions, the mobile phone must be connected to the multimedia system via Bluetooth® (→ page 583).

  If there was no prior Internet connection, this is established with the use of the mobile phone with Android Auto.

ⓘ For safety reasons, the first activation of Android Auto on the multimedia system must be carried out when the vehicle is stationary with the parking brake.

► Connect the mobile phone to a USB port on the multimedia system using a suitable cable (→ page 610).

When the application is connected for the first time, a message about data protection regulations appears.

► Select Accept & start if the application should be started.

or

► Open the device manager (→ page 583).
► Start Android Auto using the relevant symbol next to the device name.

EXITING ANDROID AUTO

► Select [⌂].

or

► Press the [⌂] button on the Touch Control (MBUX multimedia system).

ⓘ If Android Auto was not displayed in the foreground before disconnecting, the application starts in the background when reconnected. You can call up Android Auto using the Android Auto symbol in the status line.

CONNECTING A MOBILE PHONE VIA ANDROID AUTO (WIRELESS)

Requirements:

- The current version of your device's operating system is being used (see the manufacturer's operating instructions).
- The device supports the Android Auto function (wireless).
- Bluetooth® is activated on the device (see the manufacturer's operating instructions).
- The device is "visible" for other devices.
- Bluetooth® is activated on the multimedia system (→ page 529).

ⓘ For safety reasons, the first activation of Android Auto on the multimedia system must be carried out when the vehicle is stationary with the parking brake.

ⓘ The Android Auto function (wireless) is not available in all countries.

Multimedia system:

→ [⌂] ▸▸ Phone ▸▸ [⚙] ▸▸ Devices

► Connect the mobile phone using Bluetooth® (→ page 583).

ⓘ Depending on the device configuration, the query whether Android Auto should be started may appear after connecting the mobile phone via Bluetooth®. In this case, the query must be answered with Yes.

► Select Start Android Auto.

When the application is connected for the first time, a message about data protection regulations appears.

► Select Accept & start.

ⓘ It is possible at any time to switch between connection via Bluetooth® or Android Auto (wireless) in the device list.

ⓘ If you have already connected a mobile phone via Bluetooth®, you can connect another mobile phone via Bluetooth® to use Android Auto via the device manager.

EXITING ANDROID AUTO

► Select [⌂].

or

► Press the [⌂] button on the Touch Control (MBUX multimedia system).

ⓘ If Android Auto was not displayed in the foreground before disconnecting, the application starts in the background when reconnected. You can call up Android Auto using the Android Auto symbol in the status line.

CALLING UP THE ANDROID AUTO SOUND SETTINGS

Multimedia system:

→ [⌂] ▸▸ Settings ▸▸ System ▸▸ Audio

► Select the sound settings.

ENDING ANDROID AUTO

► Select the Android Auto symbol in the device manager (telephone, media) that is next to the device name of the mobile phone.

ⓘ Select the Android Auto symbol in the device manager if Android Auto should be restarted.

ⓘ If Android Auto was not displayed in the foreground before disconnecting, the application starts in the background the next time it is started automatically. You can call up Android Auto using the Android Auto symbol in the status line.

Transferred vehicle data with Android Auto and Apple CarPlay®

OVERVIEW OF TRANSFERRED VEHICLE DATA

When using Smartphone Integration, certain vehicle data is transferred to the mobile phone. This enables you to get the best out of selected mobile phone services. Vehicle data is not directly accessible.

THE FOLLOWING SYSTEM INFORMATION IS TRANSMITTED:

- Software release of the multimedia system
- System ID (anonymised)

The transfer of this data is used to optimise communication between the vehicle and the mobile phone.

To do this, and to assign several vehicles to the mobile phone, a vehicle identifier is randomly generated.

This has no connection to the vehicle identification number (VIN) and is deleted when the multimedia system is reset (→ page 536).

THE FOLLOWING VEHICLE STATUS DATA IS TRANSMITTED:

- Transmission position engaged
- Distinction between parked, standstill, rolling and driving
- Day/night mode of the driver display
- Drive type

The transfer of this data is used to alter how content is displayed to correspond to the driving situation.

THE FOLLOWING POSITION DATA IS TRANSMITTED:

- Coordinates
- Speed
- Compass direction
- Acceleration direction

This data is used by the mobile phone to improve the accuracy of the navigation (e.g. for continuation in a tunnel).

Online and Internet functions

Internet connection

INFORMATION ON CONNECTING TO THE INTERNET

> ⚠ **WARNING**
> Risk of distraction from information systems and communications equipment
>
> If you operate information systems and communication devices integrated in the vehicle when driving, you could be distracted from the traffic situation. This could also cause you to lose control of the vehicle.
>
> ► Only operate this equipment when the traffic situation permits.
>
> ► If you cannot be sure of this, stop the vehicle whilst paying attention to road and traffic conditions and operate the equipment with the vehicle stationary.

You must observe the legal requirements for the country in which you are currently driving when operating the multimedia system.

> ⚠ **WARNING**
> Risk of accident from operating mobile communication equipment while the vehicle is in motion
>
> Mobile communication devices distract the driver from the traffic situation. This can also cause the driver to lose control of the vehicle.
>
> ► As a driver, only operate mobile communication devices when the vehicle is stationary.
>
> ► As a vehicle occupant, use mobile communication devices only in the designated area, e.g. in the rear passenger compartment.

You must observe the legal requirements for the country in which you are currently driving when operating mobile communication equipment in the vehicle.

DEPENDING ON THE VEHICLE'S EQUIPMENT AND AVAILABILITY IN THE COUNTRY, YOU CAN ESTABLISH AN INTERNET CONNECTION IN THE FOLLOWING WAYS:

- **Vehicles with a communication module:**
  - Using the communication module including data roaming (⟶ page 601)
  - Using Bluetooth® or Wi-Fi with a data-enabled mobile phone
- **Vehicles without a communication module:**
  - Using Bluetooth® or Wi-Fi with a data-enabled mobile phone

The Internet functions can only be used to a limited degree whilst driving.

SETTING UP AN INTERNET CONNECTION USING THE COMMUNICATION MODULE

Requirements:

- The vehicle is equipped with a permanently installed communication module.
- A Mercedes me ID is available.
- The vehicle is connected to a Mercedes me ID.
- The Digital Extra Internet in the Car is activated.

Multimedia system:

▶ ⌂ ▶▶ Settings ▶▶ System ▶▶ Internet and Bluetooth ▶▶ Manage Internet access

▶ Select Data package.

With most Digital Extras, data volume is available when purchasing the Digital Extras.

Additional data volume is required to use some functions, e.g. web browser or Wi-Fi hotspot.

If the data volume limit is reached, Digital Extras are only available to a limited extent.

Depending on the vehicle equipment, you can purchase a data package directly from a mobile phone network provider via the Mercedes-Benz Store. To be able to use the data package, you must conclude your own contract with a mobile phone network provider via the Mercedes-Benz Store. This can be terminated at any time and incurs no costs. This contract is a prerequisite for being able to use the Digital Extras from the previously purchased package. The availability of this option is dependent on the country.

If the data package option is not available or can be upgraded, you can purchase data volume directly from the mobile phone network provider for a fee.

ⓘ Find out at a Mercedes-Benz service centre whether it is possible in your country to purchase data volume directly from a mobile phone network provider for a fee.

ⓘ Alternatively, and if available, you can utilise the tethering function of a mobile phone via Wi-Fi or Bluetooth® to use the web browser or Wi-Fi hotspot.

ⓘ With external Wi-Fi hotspots, which are encrypted via TKIP, online software updates cannot be carried out via the external Wi-Fi hotspot.

SETTING UP AN INTERNET CONNECTION WITH WI-FI

Requirements:

- The Wi-Fi function is activated on the multimedia system (⟶ page 530).
- The Wi-Fi hotspot function is activated on the mobile phone (see the manufacturer's operating instructions).
- Internet access via Wi-Fi is activated (see the manufacturer's operating instructions).

Multimedia system:
Settings ▶▶ System ▶▶ Internet and Bluetooth ▶▶ Manage Internet access

ⓘ This function is country-dependent.

The mobile phone is listed in the Internet device manager

▶ Select the mobile phone with the Wi-Fi symbol.

The mobile phone is not listed in the Internet device manager

▶ Select Search for access.

▶ Select the mobile phone with the Wi-Fi symbol.
It may take a few seconds until the device is found by the Wi-Fi search.

▶ Log in to a Wi-Fi network (⟶ page 530).

THE INTERNET CONNECTION VIA WI-FI IS RESTRICTED OR DOES NOT FUNCTION IN THE FOLLOWING CASES:

- The mobile phone is switched off
- Mobile data use is deactivated on the mobile phone
- The Wi-Fi function is deactivated on the multimedia system.
- The Wi-Fi function is deactivated on the mobile phone.
- Internet access via Wi-Fi is deactivated on the mobile phone.

SETTING UP AN INTERNET CONNECTION WITH BLUETOOTH®

Requirements:

- The mobile phone supports the Bluetooth® profile PAN (**P**ersonal **A**rea **N**etwork).
- The mobile phone is connected to the multimedia system via Bluetooth® (⟶ page 583).
- Internet access via Bluetooth® is activated (see the manufacturer's operating instructions).

Multimedia system:
Settings ▶▶ System ▶▶ Internet and Bluetooth ▶▶ Manage Internet access

ⓘ This function is country-dependent.

The mobile phone is listed in the Internet device manager

▶ Select the mobile phone with the Bluetooth® symbol.

The mobile phone is not listed in the Internet device manager

▶ Select Search for access.
In the list displayed, all mobile phones already known to the multimedia system are shown. New devices can be set up using the phone application.

▶ Connect the mobile phone using Bluetooth® (⟶ page 583).

ⓘ If a new mobile phone is connected using Bluetooth®, this is also used for the telephone application.

THE INTERNET CONNECTION VIA BLUETOOTH® IS RESTRICTED OR DOES NOT FUNCTION IN THE FOLLOWING CASES:

- The mobile phone is switched off
- The mobile phone network coverage is insufficient

- Mobile data use is deactivated on the mobile phone
- The Bluetooth® function on the multimedia system is switched off and the mobile phone is to be connected via Bluetooth®
- The Bluetooth® function is switched off on the mobile phone and the mobile phone is to be connected via Bluetooth®
- Neither the mobile phone network nor the mobile phone allow simultaneous use of a telephone and an Internet connection
- The mobile phone has not been enabled for Internet access via Bluetooth®

CANCELLING INTERNET ACCESS PERMISSION FOR A MOBILE PHONE

Multimedia system:

→ [⌂] ▸▸ Settings ▸▸ System ▸▸ Internet and Bluetooth ▸▸ Manage Internet access

▶ Select options [•••] next to the name of the mobile phone.

▶ Select Delete configuration.

▶ Select Yes.

ESTABLISHING AN INTERNET CONNECTION

Multimedia system:

→ [⌂] ▸▸ Apps

▶ For example, select [🌐] Browser.

If you select a function that requires an Internet connection and the system is currently offline, a menu opens with a selection of possible Internet accesses as well as all tethering devices that are within range.

▶ Select an Internet access from the list.
The Internet connection is established.

ⓘ The list of possible Internet connections can also be displayed using the extended status line.

ⓘ Depending on the vehicle equipment and country availability, you can establish an Internet connection via the communication module or connected mobile phones.

ⓘ The availability of the web browser depends on the country.

Connection status

CONNECTION STATUS OVERVIEW

DEPENDING ON THE CONNECTION STATUS, THE FOLLOWING SYMBOLS CAN APPEAR ON THE MEDIA DISPLAY IN THE STATUS LINE:

- [📶]: a Wi-Fi device is selected as Internet access.
- [✱]: a Bluetooth® device is selected as Internet access.
- Mobile communications standard (e.g. 4G + double arrow symbol): the communication module is selected as the hotspot.

DISPLAYING THE CONNECTION STATUS

Multimedia system:

→ [⌂]

▶ Briefly press the status line.
The extended status line is displayed.

▶ Briefly press the Internet symbol in the symbol overview.
The current connection status is displayed.

NOTES ON DISPLAYING THE CONNECTION STATUS

- When connecting via Wi-Fi, the connection status and device name are displayed.
- When connecting via a Bluetooth® device, the connection status, device name, and network type are displayed.
- In the case of a connection via the communication module the following status information can be shown:
  - Type of network
  - Status (online, offline, data volumes available or used, limited service)
- For vehicles with a communication module, the connection data of non-user paid Digital Extras can be displayed via Digital Extras.

Web browser

CALLING UP A WEB PAGE

WARNING
Risk of distraction from information systems and communications equipment

If you operate information systems and communication devices integrated in the vehicle when driving, you could be distracted from the traffic situation. This could also cause you to lose control of the vehicle.

- ▶ Only operate this equipment when the traffic situation permits.
- ▶ If you cannot be sure of this, stop the vehicle whilst paying attention to road and traffic conditions and operate the equipment with the vehicle stationary.

You must observe the legal requirements for the country in which you are currently driving when operating the multimedia system.
Multimedia system:

→ ⌂ ▸▸ Apps ▸▸ Browser

CALLING UP A NEW WEB PAGE

- ▶ Select Search.
- ▶ Entering a web address.
- ▶ Select OK.

ⓘ The function is country-dependent.

ⓘ No web pages can be displayed on the multimedia system while driving.

CALLING UP A WEBSITE FROM THE BROWSER HISTORY

- ▶ **To call up the previous page from the history:** select ⟨.

WEB BROWSER OVERVIEW

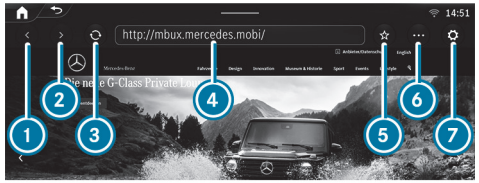

1. Previous website
2. Next website
3. Update

4 URL
5 Adds/removes bookmarks
6 Options
7 Settings

UNDER [•••] YOU HAVE THE FOLLOWING OPTIONS:

- Bookmarks & history
- Reading mode
- Request mobile website

CALLING UP WEB BROWSER OPTIONS

Multimedia system:

[⌂] ▶▶ Apps ▶▶ [🌐] Browser ▶▶ [•••] ▶▶ Bookmarks & history

THE FOLLOWING FUNCTIONS ARE AVAILABLE:

- Bookmarks
- Browsing history
- Entered URLs

▶ Select an option.

▶ Change the settings.

CALLING UP THE WEB BROWSER SETTINGS

Multimedia system:

[⌂] ▶▶ Apps ▶▶ [🌐] Browser ▶▶ [⚙] ▶▶ Settings

THE FOLLOWING FUNCTIONS ARE AVAILABLE:

- Block popups
- Enable cookies
- Enable Javascript

▶ Switch a function on [●] or off [○].

DELETING BROWSER DATA

Multimedia system:

[⌂] ▶▶ Apps ▶▶ [🌐] Browser ▶▶ [⚙] ▶▶ Browser data

THE FOLLOWING SPECIFIC BROWSER DATA CAN BE DELETED:

- Cache
- Cookies
- Form data

▶ Select one of the options shown.

MANAGING BOOKMARKS

Multimedia system:

[⌂] ▶▶ Apps ▶▶ [🌐] Browser ▶▶ [•••]

▶ Select Bookmarks & history.

▶ Select [•••] after the bookmark.

A menu with options opens.

THE FOLLOWING OPTIONS ARE AVAILABLE:

- Delete entry
- Delete all
- Edit
- Share

▶ Select one of the options shown.

SETTING THE WEB BROWSER IN THE BACKGROUND

Multimedia system:

Apps ▶▶ Browser

▶ Press .

Audio playback continues.

TuneIn Radio

CALLING UP TUNEIN RADIO

Requirements

- A user account is available at https://www.mercedes.me.
- The vehicle is linked to the user's Mercedes-Benz account.
- The TuneIn radio service is activated.
- The data volume is available.
  Depending on the country, data volume may need to be purchased.
- A fast Internet connection for data transmission free of interference.

ⓘ The functions and services are country-dependent. For more information, consult a Mercedes-Benz service centre.

Multimedia system:

Radio

▶ Select TuneIn Radio.

The TuneIn Radio menu appears. The last station set starts playing.

ⓘ The connection quality depends on the local mobile phone reception.

OVERVIEW OF TUNEIN RADIO

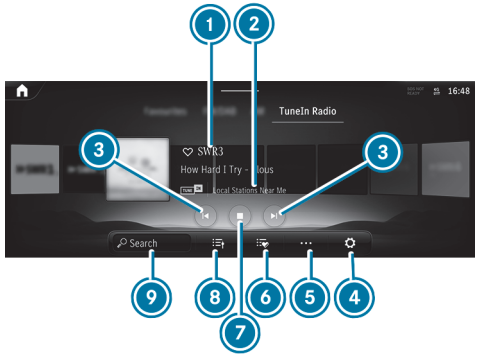

1. Internet radio provider
2. Additional information on the currently selected station
3. Previous or next station
4. Settings
5. Additional options
6. Favourites
7. Controls playback
8. Station list
9. Search

SELECTING AND CONNECTING TUNEIN RADIO STATIONS

Multimedia system:

Radio ▶▶ TuneIn Radio

▶ Select .

- Select a category.
- Select a station.
  The connection is established automatically.

or

- Select the search field.
- Enter a station name.

> A relatively large volume of data can be transmitted when using Internet Radio.

SAVING/DELETING TUNEIN RADIO STATIONS AS FAVOURITES

Multimedia system:

→ [Home] ▶▶ [Radio] ▶▶ Radio ▶▶ TuneIn Radio

SAVING FAVOURITES

- Select a station.
- Press the symbol next to the station name.

DELETING FAVOURITES

- Select a station.
- Press the symbol next to the station name.

SETTING INTERNET RADIO OPTIONS

Multimedia system:

→ [Home] ▶▶ [Radio] ▶▶ Radio ▶▶ TuneIn Radio ▶▶ [Settings] ▶▶ TuneIn

THE FOLLOWING OPTIONS ARE AVAILABLE:

- Select stream: select the stream quality
- Login to TuneIn account: log in to your TuneIn user account
- Log out of account: log out of your TuneIn user account

- Select an option.

Media

Information about media mode

INFORMATION ON SUPPORTED FORMATS AND DATA STORAGE MEDIA

WARNING
Risk of distraction when handling data storage media

If you handle a data storage medium while driving, your attention is diverted from the traffic conditions. This could also cause you to lose control of the vehicle.

► Only handle a data storage medium when the vehicle is stationary.

SUPPORTED FORMATS AND DATA STORAGE MEDIA:

Permissible file systems	FAT32, exFAT, NTFS
Permissible data storage media	USB devices, iPod®/iPhone®, MTP devices, Bluetooth® audio devices
Supported audio formats	MP3, WMA, AAC, WAV, FLAC, ALAC
Supported video formats	MPEG, AVI, MKV, MP4, M4V, WMV

OBSERVE THE FOLLOWING NOTES:

- A total of up to 50000 supported files are managed by the multimedia system.
- Data storage media up to 2 TB are supported (32-bit address space).
- Due to the large variety of available music and video files in terms of encoders, sampling frequencies and data transfer rates, playback cannot be guaranteed.
- Due to the large number of USB devices available on the market, playback of all USB devices cannot be guaranteed.
- Videos are supported up to FullHD (1920x1080).
- Copy-protected music and video files or DRM (Digital Rights Management) encrypted files cannot be played.
- MP3 players must support Media Transfer Protocol (MTP).

INFORMATION ON COPYRIGHT PROTECTION AND TRADEMARKS

Audio files which you create yourself (e.g. copies of data storage media you make yourself) are generally subject to copyright protection. In many countries, reproductions are not permitted without the prior consent of the copyright holder, even for private use. Make sure that you know about the applicable copyright regulations and that you comply with these.

Manufactured under licence from Dolby Laboratories. Dolby, Dolby Audio and the double-D symbol are trademarks of Dolby Laboratories.

For DTS patents see https://patents.dts.com. Manufactured under licence from DTS Licensing Limited. DTS, the Symbol, & DTS and the Symbol together are registered trademarks, and DTS TruVolume is a trademark of DTS, Inc.© DTS, Inc. All Rights Reserved.

DTS® Connected Radio™

For DTS patents see http://patents.dts.com. Manufactured under licence from DTS Licensing Limited. DTS, DTS Connected Radio, and the DTS logo are registered trademarks or trademarks of DTS, Inc. in the United States and other countries. © 2020 DTS, Inc. ALL RIGHTS RESERVED. Lyrics licensed and provided by Lyric Find™. Content licensed and sourced from Radioplayer™.

Gracenote, the Gracenote logo and logotype, "Powered by Gracenote", MusicID and Playlist Plus are either registered trademarks or trademarks of Gracenote, Inc. in the United States and/or other countries.

This product contains Spotify software that is subject to the following third-party licences: https://www.spotify.com/connect/third-party-licenses

TIDAL and TIDAL logo are registered trademark of Aspiro AB in the European Union and other countries.

Overview of the media menu

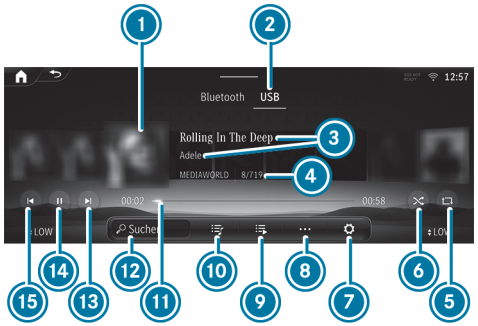

1. Album cover
2. Active media source
3. Track and artist
4. Active data storage medium and current track number/track in playback list
5. Repeat
6. Random playback
7. Settings
8. Additional options
9. Additional categories
10. Playlists and categories
11. Timeline
12. Media search
13. Next track or fast forward
14. Controls playback
15. Previous track or fast rewind

Connecting the data storage media to the multimedia system

CONNECTING USB DEVICES

NOTE
Damage caused by high temperatures

High temperatures can damage USB devices.

► Remove the USB device after use and take it out of the vehicle.

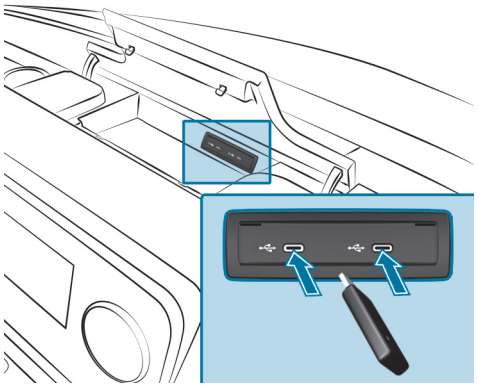

The multimedia connection unit is located at the top centre of the storage compartment and has two type C USB ports.

► Connect the USB device to the USB port.

ⓘ When connecting several Apple® devices at the same time, pay attention to the connection sequence. The multimedia system only connects with the device that is connected first. Additional Apple® devices that are connected at the same time are only supplied with power.

SEARCHING FOR AND AUTHORISING A BLUETOOTH® AUDIO DEVICE

Requirements:

- Bluetooth® is activated on the multimedia system and audio device.
- The audio device supports the Bluetooth® audio profiles A2DP and AVRCP.
- The audio device is "visible" for other devices.

Multimedia system:

Media » Bluetooth »

AUTHORISING A NEW BLUETOOTH® AUDIO DEVICE

► Select Connect new device.

Detected equipment is displayed in the device list.

► Select an audio device.

Authorisation starts. A code is displayed on the multimedia system and on the mobile phone.

► If the codes are identical, confirm on the audio device.

► Select Only as Bluetooth audio device.

The Bluetooth® audio device is connected with the multimedia system.

CONNECTING A PREVIOUSLY AUTHORISED BLUETOOTH® AUDIO DEVICE

► Select a Bluetooth® audio device from the list.

The connection is established.

Starting media playback

A data storage medium is connected to the multimedia system.

Multimedia system:

Media

► Select USB or Bluetooth as the media source.

Controlling media playback

Multimedia system:

Media

- **To pause playback: select** [⏸].
- **To continue playback:** select [▶].
- **To repeat a track:** select [🔁].

  FOR THE REPEAT FUNCTION THERE ARE THE FOLLOWING SETTINGS:

  - **Select once:** the active playlist is repeated.
  - **Select twice:** the current track is repeated.
  - **Select three times:** the repeat function is deactivated.
- **To play back tracks in random order:** select [🔀].
- **To rewind or fast-forward a track:** tap on the desired point on the timeline.
- **To select the next track:** select [⏭].
- **To select the previous track:** select [⏮].
- **To scroll through tracks quickly:** press and hold [⏮] or [⏭].
- **To show the current track list:** select [♫].

Additional options for setting media playback

Multimedia system:

Media

CALLING UP ADDITIONAL OPTIONS

- Select [•••].

  The additional options are shown.
- Select an option.

Music online

CALLING UP MUSIC ONLINE

Multimedia system:

Media

- Select Online music.

Music playback can be controlled with the Touch Control or by using the media application.

SEARCHING FOR MUSIC IN ONLINE MUSIC

Multimedia system:

Media Online music

SEARCHING FOR CATEGORIES IN ONLINE MUSIC

The media content of the streaming provider can be scanned through in the category search. The available categories and the symbol for the category search depend on the streaming provider.

- Start the category search.

  The list of available categories appears.

- Select a category.

KEYWORD SEARCH IN ONLINE MUSIC
You can look for content using the keyword search with free text input.

- Select [ ].
  A keyboard for character entry appears.
- Enter the term searched for.

> The more characters entered when using the keyword search, the more concrete the search results are.

- Select the desired entry from the result list.
  Depending on the selected hit, playback is started or a lower level in the search is opened.

CALLING UP ONLINE MUSIC SETTINGS
Multimedia system:
[ ] ▶▶ Media ▶▶ Online music

- Select [ ].
- Select Music services.
- Select [ ] next to a streaming provider.
- Select a setting.

> Information about the linked accounts can be displayed using the [ ] gearwheel symbol next to the configured streaming provider. The available information depends on what is offered by the provider of the streaming service.

Media search

INFORMATION ABOUT THE SEARCH FUNCTION IN CATEGORIES
Under [ ] you can search through all available media files. There are several categories available for selection. The categories shown depend on the connected device and data format.

> The categories are available as soon as the entire media content has been read in and analysed.
> Availability of the media search with Android devices may be limited.

STARTING A SEARCH IN CATEGORIES
Multimedia system:
[ ] ▶▶ Media ▶▶ [ ]

- Select a category.

USING THE KEYWORD SEARCH
Multimedia system:
[ ] ▶▶ Media

You can look for content using the keyword search with free text input.

- Select [ ].
  A keyboard for character entry appears.
- Enter the term searched for.

> The search begins with the first character entered. The more characters entered the more concrete the search results become.

- Select the desired entry from the result list.
  If a list with several tracks is selected, then this is opened in the search.
  To playback all of the tracks in the list, select [•••] and then Play now.

Radio

Switching on the radio

Multimedia system:

Radio

- Start the application on the multimedia system home screen.
  The radio display appears. You will hear the last station played on the last frequency band selected.

Radio overview

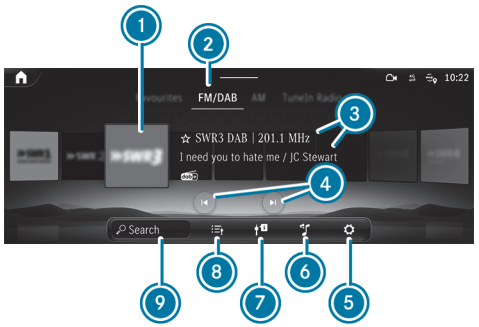

1. Preview picture
2. Active frequency band
3. Station name, set frequency and additional information on the station
4. Previous or next station
5. Settings
6. Sound settings
7. Switches on traffic reports
8. Station list
9. Search

Setting the frequency band

Multimedia system:

Radio

- Select a frequency band or a favourite.

Selecting a radio station

Multimedia system:

Radio

- Swipe to the left or right on the control element or select a radio station.

Calling up the radio station list

Multimedia system:

Radio

- Select .
  The station list appears.
- Swipe the station list up or down.
- Select a station.

Searching for radio stations using station names or frequency entry

Multimedia system:

Radio

- Select .
- Enter a station name or frequency.
- Select a station.

Storing radio stations

Multimedia system:

Radio

- Select a radio station.
- Select .

Managing favourites

Multimedia system:

Radio Favourites

MOVING STATIONS

- Press .
  The list of favourites appears.
- Press to the far right of the station name.
- Select Move.
- Move the station to the new position.

Switching traffic announcements on/off

Multimedia system:

Radio General

- Activate or deactivate Traffic announcements.

Displaying radio text

Multimedia system:

Radio Active frequency band

- Activate or deactivate Radio text information.

Sound

Sound settings

INFORMATION ABOUT THE SOUND SYSTEM
The sound system has a total output of 100 W and is equipped with seven speakers. It is available for all functions in the radio and media modes.

> ⓘ The call can also be made from other audio sources. Replace Media with, for example, Radio in the menu path.

CALLING UP THE SOUND MENU
Multimedia system:
→ [⌂] ▶▶ Media ▶▶ [⚙]

- Select one of the functions shown to make settings.

ADJUSTING TREBLE, MID-RANGE AND BASS SETTINGS
Multimedia system:
→ [⌂] ▶▶ Media ▶▶ [⚙]

- Set Treble, Mid or Bass.

SWITCHING LOUDNESS NORMALISATION ON OR OFF
Multimedia system:
→ [⌂] ▶▶ Media ▶▶ [⚙] ▶▶ Loudness normalisation

The function compensates for differing loudness when changing between audio sources and within an audio source. Several levels are available for this purpose. The currently set level is displayed.

Loudness normalisation can also be switched off.

- Switch on one level.

or

- Switch off loudness normalisation.

SETTING THE BALANCE AND FADER
Multimedia system:
→ [⌂] ▶▶ Media ▶▶ [⚙] ▶▶ Balance and Fader

SETTING THE BALANCE

- In the grid shown, move the volume distribution between the right and left speakers in the vehicle.

  The volume is distributed between the right and left-hand speakers.

ADJUSTING THE FADER

- In the grid shown, move the volume distribution between the front and rear speakers in the vehicle.

  The volume is distributed between the front and rear speakers.

Back to Contents

Transporting

This interactive PDF works like a website – tap or click a button to jump straight to where you want to go.
You can return here at any time via the navigation bar at the top left.

Notes on loading guidelines
Notes on distributing the load within the vehicle
Securing loads
Load securing aid
Carrier systems

Notes on loading guidelines

DANGER
Risk of poisoning from exhaust gases

Combustion engines emit poisonous exhaust gases, such as carbon monoxide. Exhaust gases can enter the vehicle interior if the tailgate is open when the engine is running, especially if the vehicle is in motion.

- ► Always switch off the engine before opening the tailgate.
- ► Never drive with the tailgate open.

WARNING
Risk of injury from unsecured objects in the vehicle

When objects are unsecured or inadequately secured, they can slip, tip over or be thrown about, striking vehicle occupants.

THIS ALSO APPLIES TO:

- luggage or loads
- seats which have been removed and are being transported in the vehicle in an exceptional case

There is a risk of injury, particularly in the event of braking manoeuvres or abrupt changes in direction.

- ► Always stow objects in such a way that they cannot be tossed about.
- ► Before travelling, secure objects, luggage or load to prevent them slipping or tipping over.
- ► When a seat is removed, keep it preferably outside the vehicle.

WARNING
Risk of accident due to incorrectly placed load

The centre of gravity of the load may be too high and/or too far back.

This can significantly impair the driving, steering and braking characteristics.

► Always ensure that the centre of gravity of the load is between the axles and as low as possible near the rear axle.

WARNING
Risk of accident due to exceeding the permissible wheel/axle loads or the gross vehicle weight

The driving characteristics, as well as steering and braking, may be greatly impaired. Overloaded tyres may overheat and burst as a consequence.

► When transporting a load, always observe the permissible wheel loads, axle loads and the maximum permissible gross mass for the vehicle (including occupants).

WARNING
Risk of burns from the tailpipe and tailpipe trims

The exhaust tailpipe and tailpipe trims can become very hot. If you come into contact with these parts of the vehicle, you could burn yourself.

► Always be particularly careful around the tailpipe and the tailpipe trims and supervise children especially closely in this area.

► Allow vehicle parts to cool down before touching them.

WARNING
Risk of injury if unsuitable climbing aids are used

IN THE EVENT THAT YOU USE OPENINGS IN THE BODYWORK OR ATTACHMENTS AS STEPS, YOU COULD:

- Slip and/or fall.
- Damage the vehicle and thus slip and fall.

► Always use non-slip, stable climbing aids, e.g. a suitable ladder.

NOTE
Damage caused by the use of openings in the bodywork or detachable part as a step

Using the lower guide of the sliding door (carriage) as a step can damage the trim and/or mechanism of the sliding door.

► Do not use the guide of the sliding door (carriage) as a step.

If you are using a roof luggage rack, please note the maximum roof load and the maximum load capacity of the roof luggage rack. You will find the maximum roof load and the maximum load capacity under "Technical Data" in the printed Owner's Manual.

The handling characteristics of your vehicle are dependent on the load distribution.

THEREFORE, PLEASE OBSERVE THE FOLLOWING NOTES WHEN LOADING:

- The load must not protrude above the upper edge of the seat backrests.
- If possible, always transport the load in the load compartment.
- Fasten the load to the tie-down eyes and distribute the load evenly among them.
- If available, use a load protection net to secure the load (⟶ page 48).
- Use tie-down eyes and fastening materials which are suitable for the weight and size of the load.

Observe the operating instructions of the manufacturer when using load securing aids or lashing material and the notes on their discard age.

IN THE FOLLOWING CASES, LOAD SECURING AIDS OR LASHING MATERIALS ARE WORN OUT, SHOULD NOT BE USED AND MUST BE REPLACED:

- If identification is missing or illegible
- If there is cord breakage or damage to load-bearing seams or other traces of cracking
- If there are cuts, holes, deformations, crushed areas or other damage
- If there is damage to clamping elements or fasteners

If the load compartment floor or loading area has been damaged in an accident, have the tie-down eyes and the lashing material checked at a qualified specialist workshop.

Even if you adhere to all the loading guidelines, an increased load increases the risk of injury in the event of an accident.

BEFORE LOADING
Check and adjust the tyre pressure as necessary (⟶ page 693).

WHEN LOADING

OBSERVE THE FOLLOWING WHEN LOADING THE VEHICLE:

- Never exceed the permissible axle load or the vehicle's permissible gross mass.
  The vehicle's kerb weight is increased if accessories or special equipment are fitted. This reduces the maximum payload.
- Observe the notes on load distribution (⟶ page 623).
- Observe the notes on load securing (⟶ page 624) and the legal requirements of the country in which you are currently driving.
- Observe the information on the carrier systems (⟶ page 45).

AFTER LOADING

OBSERVE THE FOLLOWING AFTER LOADING THE VEHICLE:

- Check that the luggage and/or load is secure before every journey and at regular intervals on long trips.
- Close all doors and the tailgate.

- Vehicles with halogen headlamps: adjust the range of the headlamps according to the vehicle load condition (⟶ page 292).
- Adjust the tyre pressure to the vehicle load condition (⟶ page 693).
- Adapt your driving style to the vehicle load condition.

Notes on distributing the load within the vehicle

NOTE
Damage to the floor covering due to uneven loading

Excessive point loading on the load compartment floor or on the load area can negatively affect the driving characteristics and could damage the floor covering.

► Distribute the load evenly. When doing so, ensure that the overall centre of gravity of the load is always as low and close to the centre as possible and between the axles near the rear axle.

OBSERVE THE FOLLOWING NOTES:

- Always transport loads in the load compartment and with the seat backrests folded up and properly locked in position.
- Always place the load against the front or rear seat backrests.
- Move large and heavy loads as far as possible towards the front of the vehicle against the back of the front or rear seats. Stow loads flush with the rear or front seats.
- Secure the load additionally with suitable load securing aids or lashing materials.
- The load must not protrude above the upper edge of the seat backrests.
- Transport loads behind seats that are not occupied.
- If the rear bench seat is not occupied, insert the seat belts crosswise into the seat belt buckle of the opposite seat belt.

LOAD COMPARTMENT VARIANTS

YOU CAN VARY THE LOAD COMPARTMENT ACCORDING TO YOUR TRANSPORTATION REQUIREMENTS AS FOLLOWS:

- by folding the rear seat backrests or rear bench seat backrests forward to the table position
- by folding the rear seats forward
- by folding the rear bench seat forward
- by removing the rear seats and/or the rear bench seat
- by removing the seat/bunk combination
- by folding up or removing the bed extension of the seat/bunk combination

Observe the notes on the seat anchorage in the rear (⟶ page 231) and on the seating variants (⟶ page 233).

Securing loads

Notes on load securing

NOTE
Damage to the vehicle if the maximum loading capacity of the lashing points is exceeded

If you combine various lashing points to secure a load, always take the maximum loading capacity of the weakest lashing point into account.

During maximum full-stop braking, forces may act which can multiply the weight of the load.

- ► Always use several lashing points to distribute and spread the load.
- ► Distribute the load on the lashing points evenly.

Information on the maximum loading capacity of the lashing points can be found under "Technical data" in the printed Owner's Manual.

AS THE DRIVER, YOU ARE RESPONSIBLE FOR ENSURING THE FOLLOWING:

- The load is secured against slipping, tipping, rolling or falling off.

  Take usual traffic conditions as well as swerving or full brake application and bad roads into account.
- The applicable requirements and guidelines relating to load-securing practices are met.

  If this is not the case, this may constitute a punishable offence, depending on local legislation and any ensuing consequences. Observe country-specific laws.

Make sure that the load is secure before every journey and at regular intervals during a long journey. Adjust the load securing as necessary. Information on how to secure loads correctly can be obtained from the manufacturers of the load securing aids or lashing systems for load securing, for example.

Also observe the notes on loading guidelines (⟶ page 619).

WHILE SECURING LOADS, PAY ATTENTION TO THE FOLLOWING:

- Fill spaces between the load and the load compartment walls or wheel wells. For this purpose, use rigid load securing aids, such as chocks, wooden shims or padding.
- Secure non-tilting and stable loads in all directions.

  Use the lashing points or the tie-down eyes and guide rails in the rear compartment.

  Only use lashing materials, such as lashing nets and lashing straps, which have been tested in accordance with current standards (e.g. DIN EN). Observing the optimum lashing angle, always use the lashing points closest to the load and pad sharp edges.

You can obtain lashing material tested in accordance with current standards (e.g. DIN EN) from a specialist company or from a qualified specialist workshop.

NOTE ON THE LASHING POINTS AND TIE-DOWN EYES ON THE LOAD COMPARTMENT FLOOR FOR PASSENGER VEHICLES (VEHICLE CATEGORY M1)

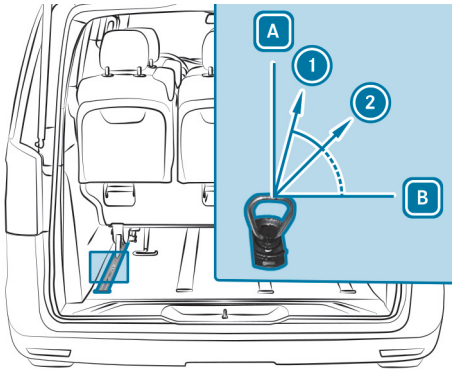

Example: lashing angle for best load security

A Vertical to the load compartment floor
B Load compartment floor
1 Direction of pull with 75° lashing angle
2 Direction of pull with 45° lashing angle

The lashing angle is the angle formed between the load compartment floor and the lashing material. For optimum load securing in accordance with standard ISO 27955 the lashing angle must be between 45° 2 and 75° 1. The maximum nominal tensile strength load of 350 daN for the tie-down eyes in the load compartment floor or in the guide rails may not be exceeded.

Overview of lashing points

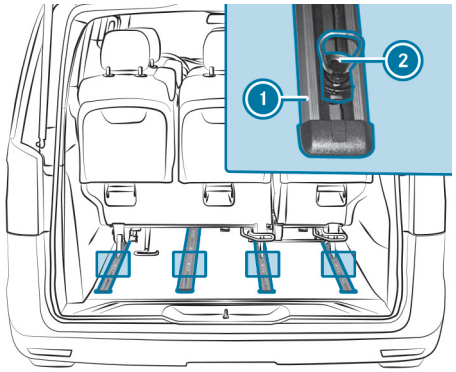

Example: variable lashing points in the guide rails

1 Guide rails
2 Tie-down eye

Do not attempt to modify or repair the lashing points, tie-down eyes or lashing materials. Read the information on qualified specialist workshops (→ page 117).

Fitting and removing tie-down eyes

WARNING
Risk of injury due to incorrectly installed tie-down eyes

If the tie-down eyes are not correctly installed, they can slip or tear out.

This may cause objects, luggage or the load to slip, tip over or be thrown about the vehicle interior, striking vehicle occupants.

- Make sure that the tie-down eyes are correctly installed and do not move.

- Observe the notes on the loading guidelines and on securing loads (→ page 619).

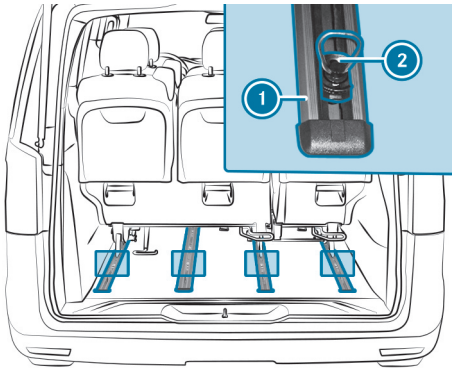

Example: guide rails

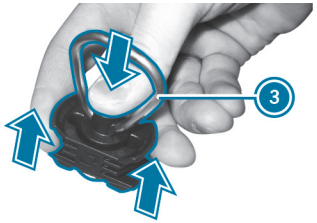

Tie-down eyes for guide rails

FITTING

- Turn metal retaining ring ③ so that it is parallel to longitudinal axis of tie-down eye ② as illustrated.

  The locking pin can only be pushed down sufficiently and allow the tie-down eye to be fitted, moved or removed, if the metal retaining ring is parallel to the longitudinal axis of the tie-down eye.

- Hold tie-down eye ② between your forefinger and middle finger as illustrated, and place your thumb through metal retaining ring ③ and on the central pressure point.

- Use your thumb to push the locking pin down as far as it will go.

- Push tie-down eye ② near the load using the notches on guide rail ①, and move it approximately 12 mm.

- Remove your thumb from the pressure point and slide tie-down eye ② until it engages.

- Turn metal retaining ring ③ so that it is perpendicular to the longitudinal axis of tie-down eye ②.

  The locking pin cannot be pushed down far if the metal retaining ring is perpendicular to the longitudinal axis of the tie-down eye. This prevents

the tie-down eye from being released unintentionally, e.g. if the tie-down eye is stepped on

- Check that tie-down eye (2) is seated correctly.

  The tie-down eye cannot be moved.

REMOVING

- Turn metal retaining ring (3) so that it is parallel to the longitudinal axis of tie-down eye (2).
- Grip tie-down eye (2) as described above under fitting and use your thumb to push the locking pin down as far as it will go.
- Slide tie-down eye (2) and pull it up and out through the notch of guide rail (1).

Load securing aid

Removing/fitting a load protection net

WARNING
Risk of injury or death due to objects being poorly secured

The load protection net alone cannot restrain or secure heavy objects, luggage or heavy loads.

You could be hit by an unsecured load during sudden changes in direction, braking or in the event of an accident.

- Always stow objects in such a way that they cannot be thrown about the vehicle.
- Secure objects, luggage or loads against slipping or tipping over, e.g. by using lashing material, even when you are using the load protection net.

WARNING
Risk of injury due to sitting behind a load protection net

Vehicle occupants can be pressed against the load protection net. There is a risk of injury!

- Never allow vehicle occupants to sit behind the load protection net.

The load protection net partitions the load compartment. It protects vehicle occupants from light objects and/or luggage slipping or falling over.

You can install the load protection net at an angle behind the front seats or behind the 2nd seat row.

- Observe the notes on securing loads (→ page 624).

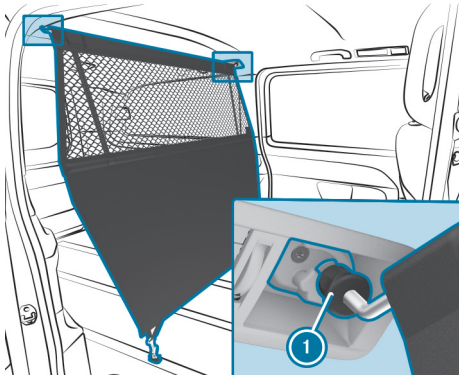

Upper retainer

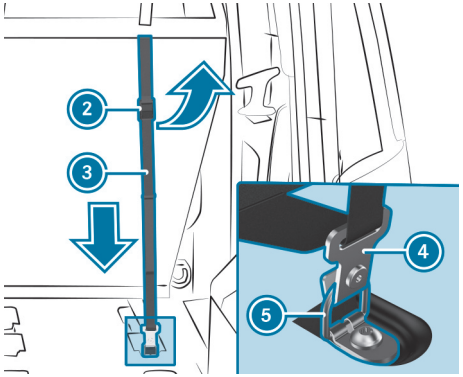

Floor anchorage (example: secured tie-down eye)

INSTALLING

- Remove the luggage compartment partition if necessary (→ page 50).
- Clip the load protection net into upper retainers 1 in such a way that tensioning straps 3 face the rear of the vehicle.
- Fit tie-down eyes 5 into the guide rails close to the rear seat legs (→ page 47). Position them at least 5 cm from the seat legs to allow subsequent movement of the rear seat.
- Check that tie-down eyes 5 are seated correctly.
  The tie-down eyes 5 should not move.
- Clip the hooks 4 on the tensioning straps 3 into the tie-down eyes 5.
- Fold the tensioning element 2 up.
- Pull the loose end of the tensioning straps 3 down in the direction of the arrow until tensioning straps 3 are tight.
- Fold tensioning element 2 down to achieve the final tension on the straps.
- If necessary, fit the luggage compartment partition (→ page 50).
- After travelling a short distance, check that the load protection net is taut, and retighten it if necessary.

REMOVING

- Remove the luggage compartment partition if necessary (→ page 50).
- Fold the tensioning element 2 up.
  Tensioning straps 3 are slack.
- Unclip hooks 4 of tensioning straps 3 from tie-down eyes 5 at the bottom.
- Unclip the load protection net from upper retainers 1.
- If necessary, remove tie-down eyes 5 (→ page 47).
- If necessary, fit the luggage compartment partition (→ page 50).
- Roll up the load protection net and fasten it, still rolled up, using the Velcro fasteners.

ADJUSTING THE FRONT SEAT WITH THE LOAD PROTECTION NET FITTED

- Fold tensioning element 2 on straps 3 upwards.
  The load protection net slackens.
- Correctly adjust the front seat.
- Re-tension the load protection net.

Using the luggage compartment partition

WARNING
Risk of injury from unsecured objects in the vehicle

When objects are unsecured or inadequately secured, they can slip, tip over or be thrown about, striking vehicle occupants.

THIS ALSO APPLIES TO:

- luggage or loads
- seats which have been removed and are being transported in the vehicle in an exceptional case

There is a risk of injury, particularly in the event of braking manoeuvres or abrupt changes in direction.

► Always stow objects in such a way that they cannot be tossed about.

► Before travelling, secure objects, luggage or load to prevent them slipping or tipping over.

► When a seat is removed, keep it preferably outside the vehicle.

WARNING
Risk of accident or injury when the luggage compartment partition is not locked in position

The luggage compartment partition can come loose when driving and be thrown about the vehicle interior.

► Fit the luggage compartment partition as described.

► After fitting the luggage compartment partition, always make sure that the luggage compartment partition is locked and folded down.

NOTE
Damage to the luggage compartment partition due to heavy loads

If the luggage compartment partition is loaded with too much weight, the fixture points and the luggage compartment partition may be damaged.

► Do not load more than 50 kg on the luggage compartment partition.

The luggage compartment partition is only secured correctly when both levers are locked.

► Comply with the loading guidelines (→ page 619).

OPENING THE STOWAGE COMPARTMENTS

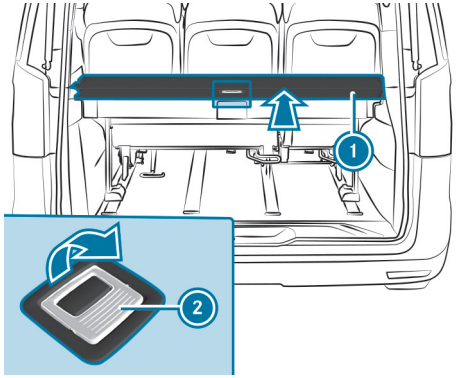

- Pull handle ② in the direction of the arrow.
  Cover ① folds upwards in the middle.
- Slide cover ① to the stop in the direction of the arrow.

CLOSING THE STOWAGE COMPARTMENTS

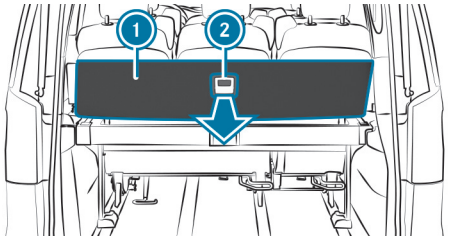

- Pull cover ① on handle ② in the direction of the arrow.
- Push cover ① down in the middle until it is fully closed.

FOLDING UP THE LUGGAGE COMPARTMENT PARTITION TO AN ANGLE OF 70-°

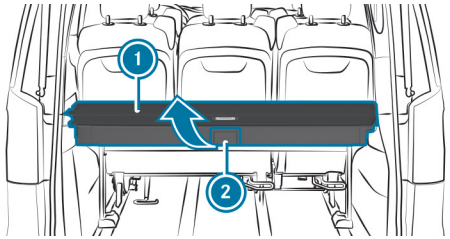

- Pull handle ② in the direction of the arrow.
  Luggage compartment partition ① is released.
- Fold up luggage compartment partition ①.

Make sure that luggage compartment partition ① is always folded down when the vehicle is moving.

FOLDING DOWN THE LUGGAGE COMPARTMENT PARTITION

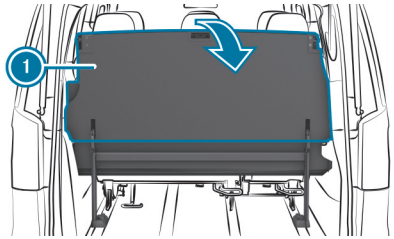

- Fold down luggage compartment partition ① until it engages.
  Luggage compartment partition ① is locked.

REMOVING THE LUGGAGE COMPARTMENT PARTITION

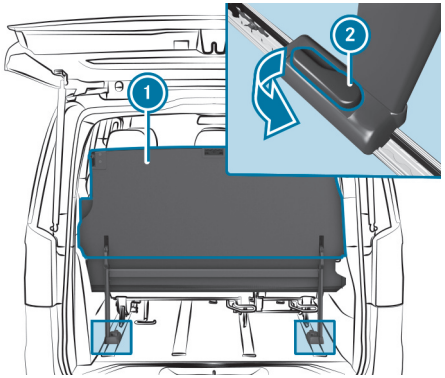

- Fold up luggage compartment partition 1.
- Swing levers 2 inwards.
  Luggage compartment partition 1 is released.
- Remove luggage compartment partition 1.

FITTING THE LUGGAGE COMPARTMENT PARTITION

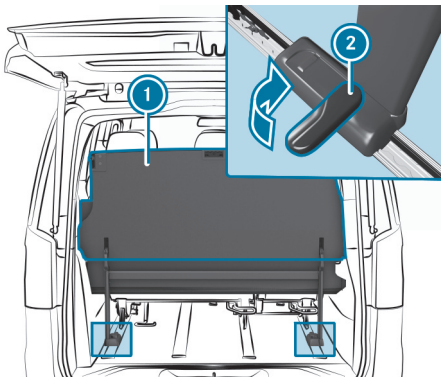

If possible, fit luggage compartment partition 1 with the help of another person.

- Place luggage compartment partition 1 into the vehicle at an angle.
- Rotate luggage compartment partition 1 in the vehicle and insert it into the guide rails.

The guide rails have triangular markings at the place to be inserted which must be at the same height as levers 2.

- Swing levers 2 outwards.
  Luggage compartment partition 1 is locked.
- Fold luggage compartment partition 1 down.

Carrier systems

Notes on carrier systems

WARNING
Risk of accident due to exceeding the maximum roof load

The vehicle centre of gravity and the usual driving characteristics as well as the steering and braking characteristics alter.

If you exceed the maximum roof load, the driving characteristics, as well as steering and braking, will be greatly impaired.

- Never exceed the maximum roof load and adjust your driving style.

You can find information on the maximum roof load under "Technical data" in the printed Owner's Manual.

NOTE
Damage due to exceeding the maximum permissible roof load

If the weight of the roof luggage, including the roof luggage rack, exceeds the maximum permissible roof load, this can cause damage to the vehicle.

- Do not exceed the maximum permissible roof load.
- Arrange the supporting feet of the roof luggage rack at an even distance from each other.
- Install the basic carrier bars for rail in front of and behind the mid-section support.

NOTE
Damage to the threaded holes of the roof luggage rack due to an excessively high tightening torque

An excessively high tightening torque or an insufficient screw-in depth can cause damage to the thread of the roof luggage rack's threaded holes.

- Tighten the screws to a maximum torque of 10 Nm.
- Comply with the minimum screw penetration of four revolutions in the thread.
- To avoid damage to the vehicle, use roof and rear luggage racks that have been tested and approved for Mercedes-Benz.

NOTE
Vehicle damage due to failure to observe the maximum permissible clearance height

If the vehicle height exceeds the maximum permissible clearance height, the roof and other vehicle parts may be damaged.

- Please observe the indicated maximum clearance height.
- If the vehicle exceeds the permissible clearance height, do not drive in.
- Take the modified vehicle height in the case of roof superstructures or other carrier systems into account.

NOTE
The operating permit may be invalidated due to the illegal installation of trailer hitches

The installation – including retrofitting – of a non-folding or non-removable trailer hitch that even partially conceals the license plate or the lighting system is prohibited.

- Observe the applicable legal regulations for the installation of trailer hitches.

You can install a roof luggage rack on the roof and, for example, a rear bicycle rack on the tailgate.

Install the cover caps of the securing thread after removing the roof luggage rack.

If you have installed a rear bicycle rack on the tailgate, the additional weight will restrict the assistance offered by the pneumatic springs when you open the tailgate. You will then need more force to open the tailgate. At outside temperatures below freezing point, you should provide additional support for the tailgate after opening it in order to prevent it from lowering unintentionally.

Back to Contents

Maintenance and care

This interactive PDF works like a website – tap or click a button to jump straight to where you want to go.
You can return here at any time via the navigation bar at the top left.

Notes on maintenance
Service interval display
Engine compartment
Cleaning and care

Notes on maintenance

ENVIRONMENTAL NOTE
Environmental pollution due to disposal in a non-environmentally-friendly manner

If, for operating reasons, individual maintenance work is carried out under your own direction, the environmental protection requirements must be observed. When disposing of service products, e.g. coolant, you must comply with the legal requirements. This also applies to all parts that have been in contact with operating fluids.

- Dispose of empty containers, cleaning cloths and care products in an environmentally responsible manner.
- Observe the instructions for care products.

When working on the vehicle, comply with all safety regulations, such as the operating instructions, regulations concerning hazardous materials, environmental protection regulations, health and safety regulations and accident prevention regulations.

You must secure the vehicle on jack stands of sufficient load-bearing capacity if work is being carried out underneath the vehicle.

Please also refer to the notes about qualified specialist workshops (→ page 117).

The scope and regularity of the inspection and maintenance work primarily depend on the often diverse operating conditions.

You can obtain further information concerning the servicing of your vehicle from a qualified specialist workshop, e.g. a Mercedes-Benz service centre.

You will find information about operating fluids approved for Mercedes-Benz and filling quantities under "Operating Fluids and Filling Quantities" (→ page 744).

Observe the information under "Mercedes-Benz GenuineParts" (→ page 103).

Service interval display

Service interval display function

The ASSYST PLUS service interval display on the driver display provides information on the remaining time or distance before the next service due date.

Under arduous operating conditions or if the vehicle is subjected to increased loads, the ASSYST PLUS service interval display may shorten the service interval.

You can obtain further information concerning the servicing of your vehicle from a qualified specialist workshop.

Displaying the service due date

Requirements

- The vehicle is switched on.

On-board computer:

Service ▶▶ ASSYST PLUS

The next service due date is displayed.

▶ **To exit the display:** press the steering-wheel button OK or ⮌.

Information on regular maintenance work

NOTE
Premature wear through failure to observe service due dates

Maintenance work which is not carried out at the right time or incompletely can lead to increased wear and damage to the vehicle.

▶ Adhere to the prescribed service intervals.

▶ Always have the prescribed maintenance work carried out at a qualified specialist workshop.

Notes on special service requirements

The prescribed service interval is based on normal vehicle use. Perform maintenance work more often than prescribed if the vehicle is operated under arduous operating conditions or increased loads.

The ASSYST PLUS service interval display serves solely as an aid. The driver of the vehicle is responsible for ensuring that servicing work is performed more often than prescribed due to actual operating conditions and/or increased operational demands.

ARDUOUS OPERATING CONDITIONS INCLUDE, FOREXAMPLE:

- Regular city driving with frequent intermediate stops

- Frequent short-distance driving
- Frequent operation in mountainous terrain or on poor road surfaces
- When the engine is regularly left idling for long periods
- Operation in particularly dusty conditions and/or if air-recirculation mode is frequently used

In these or similar operating conditions, have the air filter, engine oil and oil filter, forexample, replaced more frequently.

Check the tyres more frequently if the vehicle is operated under increased stress. You can obtain further information at a qualified specialist workshop.

Non-operational times with the battery disconnected

The ASSYST PLUS service interval display can calculate the service due date only when the battery is connected.

► Display and note down the service due date on the driver display before disconnecting the battery.
  - Displaying the service due date (→ page 637).

Engine compartment

Opening and closing the bonnet

WARNING
Risk of accident due to driving with the bonnet unlocked

The bonnet may open and block your view.

- ► Never release the bonnet when driving.
- ► Before every trip, ensure that the engine bonnet is locked.

WARNING
Risk of accident and injury when opening and closing the bonnet

The bonnet may suddenly drop into the end position.

There is a risk of injury for anyone in the engine bonnet's range of movement.

- ► Do not open or close the bonnet if there is a person in the bonnet's range of movement.

WARNING
Risk of burns when opening the bonnet

IF YOU OPEN THE BONNET IN THE EVENT OF AN OVERHEATED ENGINE OR FIRE IN THE ENGINE COMPARTMENT, THE FOLLOWING SITUATIONS MAY OCCUR:

- You may come into contact with hot gases.
- You may come into contact with other escaping hot operating fluids.

- ► Before opening the bonnet, allow the engine to cool down.
- ► In the event of a fire in the engine compartment, keep the bonnet closed and call the fire service.

WARNING
Risk of injury due to moving parts

Components in the engine compartment can continue to run or start unexpectedly even when the ignition is switched off.

Observe the following before performing tasks in the engine compartment:

- Switch off the ignition.
- Never touch the danger zone surrounding moving components, e.g. the rotation area of the fan.
- Remove jewellery and watches.
- Keep items of clothing and hair away from moving parts.

WARNING
Risk of injury from touching components under voltage

The ignition system and the fuel injection system operate at high voltage. You could receive an electric shock.

- Never touch ignition system or fuel injection system components when the vehicle is switched on.

THE FOLLOWING ARE EXAMPLES OF LIVE COMPONENTS:

- Ignition coils
- Spark plug connectors
- Injectors

WARNING
Risk of burns from hot component parts in the engine compartment

Certain component parts in the engine compartment can be very hot, e.g. the engine, the cooler and parts of the exhaust system.

- Allow the engine to cool down and only touch component parts described in the following.

NOTE
Damage to bonnet or windscreen wipers when opening the bonnet

If the windscreen wipers have been folded back from the windscreen when the bonnet is opened, the windscreen wipers or the bonnet may be damaged.

- Ensure that the windscreen wipers have not been folded back from the windscreen.

OPENS THE BONNET

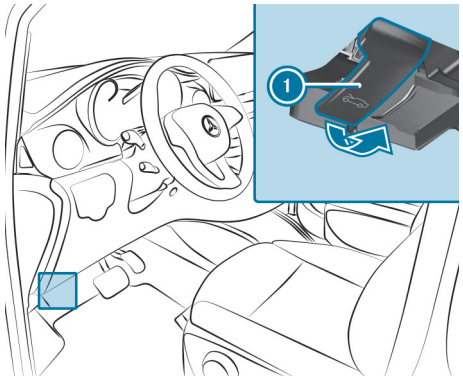

- Pull handle (1) to release the bonnet.

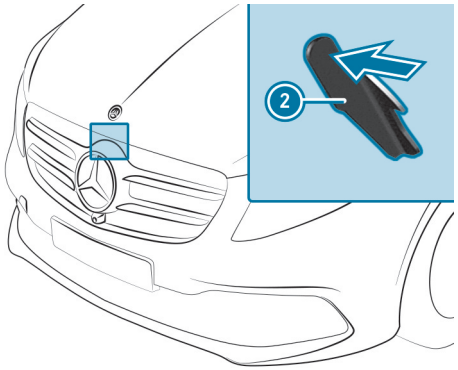

- Reach into the gap, push lever (2) of the bonnet catch to the left and lift the bonnet.

  When the bonnet has opened around 40 cm, it will be automatically opened and held by the gas pressure spring dampers.

CLOSING THE BONNET

> ⚠ **WARNING**
> Risk of fire due to flammable materials in the engine compartment or on the exhaust system
>
> Flammable materials may ignite.
>
> - Ensure that there are no flammable external materials in the engine compartment or on the exhaust system after maintenance work has been carried out.

> ! **NOTE**
> Damage to the bonnet due to pressing it closed manually
>
> Pushing the bonnet closed with your hands could damage it.
>
> - To close the bonnet, let it drop from the specified height.

- Lower the bonnet and let it fall from a height of approximately 30 cm, applying a little force as you let it go.
- If the bonnet remains slightly open, open it again and let it fall, applying slightly more force as you let it go, until it engages.

Engine oil

CHECKING THE ENGINE OIL LEVEL WITH THE ON-BOARD COMPUTER

Requirements:

- The vehicle is level during the measuring process.
- The bonnet is closed.
- Depending on the driving profile, the oil level can be displayed only after a driving time of up to 30 minutes and only when the vehicle is switched on.

On-board computer:

→ Service ▶▶ Engine oil level:

ONE OF THE FOLLOWING MESSAGES APPEARS ON THE DRIVER DISPLAY:

- Engine oil level Measuring now...: measurement of the oil level is not yet possible. Repeat the query after driving for a maximum of 30 minutes.

- Engine oil level OK and the bar indicating the oil level on the driver display is green and is between "min" and "max": the oil level is correct.
- Engine oil level Drive until engine is warm: warm up the engine to operating temperature.
- Engine oil level Correct measurement only if vehicle is on level ground: park the vehicle on a level surface.
- Engine oil level Top up 1,0 l and the bar indicating the oil level on the driver display is orange and lies below "MIN": add 1 l of engine oil.
- Reduce engine oil level and the bar indicating the oil level on the driver display is orange and lies above "MAX": drain off excess engine oil.
  Consult a qualified specialist workshop.
- For engine oil level, switch on vehicle: switch on the vehicle.
- Engine oil level System currently unavailable:
  - Close the bonnet.
  - **The message is persisting:** the sensor is defective or not connected. Consult a qualified specialist workshop.

ⓘ **Vehicles with cold oil level displays:** the oil level will automatically be displayed on the driver display after the vehicle has been non-operational for an extended period. If it is not possible to measure the engine oil level, a message to that effect will appear.

ⓘ The result of the electronic measurement always takes precedence over other measurements.

TOPPING UP THE ENGINE OIL

⚠ **WARNING**
Risk of burns when opening the bonnet

IF YOU OPEN THE BONNET IN THE EVENT OF AN OVERHEATED ENGINE OR FIRE IN THE ENGINE COMPARTMENT, THE FOLLOWING SITUATIONS MAY OCCUR:

- You may come into contact with hot gases.
- You may come into contact with other escaping hot operating fluids.

- Before opening the bonnet, allow the engine to cool down.
- In the event of a fire in the engine compartment, keep the bonnet closed and call the fire service.

WARNING
Risk of injury due to moving parts

Components in the engine compartment can continue to run or start unexpectedly even when the ignition is switched off.

Observe the following before performing tasks in the engine compartment:

- Switch off the ignition.
- Never touch the danger zone surrounding moving components, e.g. the rotation area of the fan.
- Remove jewellery and watches.
- Keep items of clothing and hair away from moving parts.

WARNING
Risk of fire and injury from engine oil

If engine oil comes into contact with hot component parts in the engine compartment, it may ignite.

- Make sure that no engine oil is spilled next to the filler opening.
- Allow the engine to cool off and thoroughly clean the engine oil from component parts before starting the vehicle.

WARNING
Risk of burns from hot component parts in the engine compartment

Certain component parts in the engine compartment can be very hot, e.g. the engine, the cooler and parts of the exhaust system.

- Allow the engine to cool down and only touch component parts described in the following.

NOTE
Damage caused by topping up too much engine oil

Excess engine oil can damage the engine or catalytic converter.

- Have excess engine oil removed at a qualified specialist workshop.

NOTE
Engine damage due to use of additives in the engine oil

The use of additional additives in the engine oil can damage the engine.

- Do not use any additional additives in the engine oil.

ENVIRONMENTAL NOTE
Environmental damage due to hydraulic fluid level spillages while topping up

If fluid spills onto soil, the environment will be damaged.

- Make sure that no fluid spills while topping up.

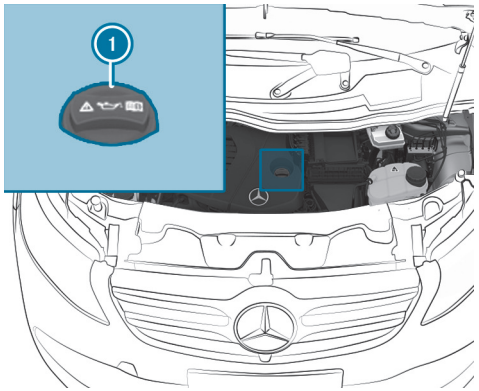

Example: engine oil filler opening

- Observe the information regarding approved engine oils under "Operating fluids and filling quantities" (→ page 751).
- Unscrew and remove cap 1.
- Top up with engine oil.
- Fit cap 1 on the filler opening and tighten.
  When doing so, make sure that the cap engages correctly.
- Check the oil level again (→ page 37).

It is necessary to run the engine for an extended period after each oil top-up to correctly detect the oil level. Fill level changes during oil top-ups may not be immediately visible. Depending on the driving profile, it may not be possible to display the new oil level until after a driving time of up to 60 minutes.

If necessary, top up with only the quantity of oil shown on the driver display and check the oil level again after the next journey.

Checking/topping up the coolant

WARNING
Risk of burns when opening the bonnet

IF YOU OPEN THE BONNET IN THE EVENT OF AN OVERHEATED ENGINE OR FIRE IN THE ENGINE COMPARTMENT, THE FOLLOWING SITUATIONS MAY OCCUR:

- You may come into contact with hot gases.
- You may come into contact with other escaping hot operating fluids.

- Before opening the bonnet, allow the engine to cool down.
- In the event of a fire in the engine compartment, keep the bonnet closed and call the fire service.

WARNING
Risk of injury due to moving parts

Components in the engine compartment can continue to run or start unexpectedly even when the ignition is switched off.

Observe the following before performing tasks in the engine compartment:

- Switch off the ignition.
- Never touch the danger zone surrounding moving components, e.g. the rotation area of the fan.
- Remove jewellery and watches.
- Keep items of clothing and hair away from moving parts.

WARNING
Risk of fire- and injury from antifreeze

If antifreeze comes into contact with hot component parts in the engine compartment, it may ignite.

- Allow the engine to cool down before you top up the antifreeze.
- Make sure that no antifreeze spills out next to the filler opening.
- Thoroughly clean the antifreeze from component parts before starting the vehicle.

WARNING
Risk of scalding from hot coolant

If you open the cap, you could scald yourself.

- Allow the engine to cool down before opening the cap.
- When opening the cap, wear protective gloves and safety glasses.
- Open the cap slowly to release pressure.

Check and top up the coolant only when the vehicle is stationary and level and the engine has cooled down. The coolant temperature must be below 50°C.

WARNING
Risk of burns from hot component parts in the engine compartment

Certain component parts in the engine compartment can be very hot, e.g. the engine, the cooler and parts of the exhaust system.

- Allow the engine to cool down and only touch component parts described in the following.

Coolant contains glycol and is therefore toxic.

- Observe the information under "Operating fluids and capacities" (→ page 753).

NOTE
Paintwork damage due to coolant

If coolant gets on painted surfaces, the paintwork can be damaged.

- Add coolant carefully.
- Remove spilled coolant.

Regularly check the engine cooling system and the heating system for leaks. If there is a loss of coolant, have the cause determined and rectified at a qualified specialist workshop without delay.

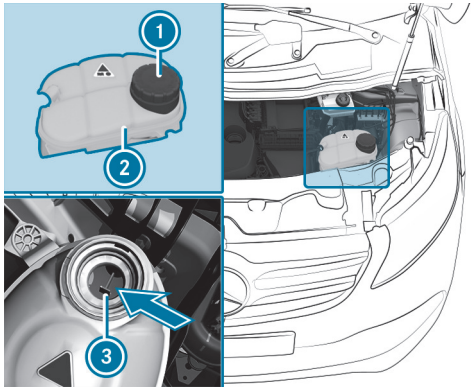

Engine coolant expansion reservoir (example)

CHECKING THE COOLANT LEVEL

- Slowly turn the cap (1) of the coolant expansion reservoir (2) half a turn anti-clockwise and allow the overpressure to escape.
- Turn cap (1) further and remove it.

THE COOLANT LEVEL WILL BE CORRECT IN THE FOLLOWING CASES:

- Up to marker bar (3) when the engine is cold
- If the engine is warm, up to 1.5 cm over marker bar (3)

TOPPING UP THE COOLANT

Use only coolant approved for Mercedes-Benz to avoid damaging the engine cooling system.

- Refer to the information on coolant (→ page 753).
- Top up the coolant up to marker bar (3) in the filler opening of coolant expansion reservoir (2).
- Replace cap (1) and turn clockwise to tighten.
- Start the engine.
- Set the temperature in the vehicle interior to the maximum output on the operating unit of the climate control.
- After about five minutes, switch off the engine again and allow it to cool down.
- Check the coolant level again and top up the coolant if necessary.

Topping up the windscreen washer system

WARNING
Risk of burns when opening the bonnet

IF YOU OPEN THE BONNET IN THE EVENT OF AN OVERHEATED ENGINE OR FIRE IN THE ENGINE COMPARTMENT, THE FOLLOWING SITUATIONS MAY OCCUR:

- You may come into contact with hot gases.
- You may come into contact with other escaping hot operating fluids.

► Before opening the bonnet, allow the engine to cool down.

► In the event of a fire in the engine compartment, keep the bonnet closed and call the fire service.

WARNING
Risk of injury due to moving parts

Components in the engine compartment can continue to run or start unexpectedly even when the ignition is switched off.

Observe the following before performing tasks in the engine compartment:

► Switch off the ignition.

► Never touch the danger zone surrounding moving components, e.g. the rotation area of the fan.

► Remove jewellery and watches.

► Keep items of clothing and hair away from moving parts.

WARNING
Risk of fire and injury from windscreen washer concentrate

Windscreen washer concentrate is highly flammable.

► Avoid fire, naked flames, smoking and the creation of sparks when using windscreen washer concentrate.

WARNING
Risk of burns from hot component parts in the engine compartment

Certain component parts in the engine compartment can be very hot, e.g. the engine, the cooler and parts of the exhaust system.

- Allow the engine to cool down and only touch component parts described in the following.

NOTE
Damage to the exterior lighting due to unsuitable windscreen washer fluid

Unsuitable windscreen washer fluids may damage the plastic surface of the exterior lighting.

- Only use windscreen washer fluids that are also suitable for use on plastic surfaces, e.g. MB SummerFit or MB WinterFit.

TOPPING UP THE WASHER FLUID

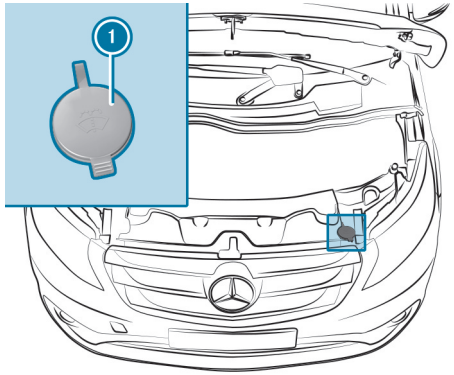

Washer fluid reservoir (example)

- Observe the notes on windscreen washer fluid (→ page 56).
- Pull cap (1) upwards by the tab.
- Top up the washer fluid.
- Push cap (1) onto the filler opening until it audibly engages.

Cleaning and care

Notes on washing the vehicle in an automatic car wash

WARNING
Risk of an accident due to reduced braking power after washing the vehicle

Braking efficiency is reduced after washing the vehicle.

► After the vehicle has been washed, brake carefully while paying attention to the traffic conditions until braking power has been fully restored.

NOTE
Damage to the vehicle due to automatic braking

WHEN THE FOLLOWING FUNCTIONS ARE ACTIVATED, THE VEHICLE BRAKES AUTOMATICALLY IN CERTAIN SITUATIONS:

- Active Brake Assist
- Active Distance Assist DISTRONIC
- HOLD function

To avoid damage to the vehicle, deactivate these systems in the following or similar situations:

► when towing

► in a car wash

NOTE
Damage due to unsuitable car wash

- Before driving into a car wash make sure that the car wash is suitable for the vehicle dimensions.
- Ensure there is sufficient ground clearance between the underbody and the guide rails of the car wash.
- Ensure that the clearance width of the car wash, in particular the width of the guide rails, is sufficient.

TO AVOID DAMAGE TO YOUR VEHICLE, OBSERVE THE FOLLOWING BEFORE USING AN AUTOMATIC CAR WASH:

- Active Brake Assist is deactivated.
- Active Distance Assist DISTRONIC is deactivated.
- The HOLD function is switched off.
- The side windows and roof are completely closed.
- The outside mirrors are folded in and any additional antenna is removed.
- The climate control blower is switched off.
- The windscreen wiper switch is in position 0.

If the vehicle is very dirty, wash off excess dirt before cleaning the vehicle in an automatic car wash.

AFTER LEAVING THE CAR WASH, PAY ATTENTION TO THE FOLLOWING:

- The outside mirrors are fully folded out again and any additional antenna is mounted again.
- Remove wax residues on the windscreen and wiper rubbers to prevent smearing and reduce wiper noise.

Remove wax residues from the camera lens in vehicles with a reversing camera (→ page 653).

Car wash mode

In car wash mode, the vehicle is prepared for driving into an automatic car wash. Car wash mode can be activated up to a speed of 20 km/h (→ page 651).

WHEN CAR WASH MODE IS ACTIVATED, THE CAR WASH MODE ACTIVE **MESSAGE WILL APPEAR ON THE DRIVER DISPLAY. THE FOLLOWING SETTINGS WILL BE MADE:**

- The outside mirrors are retracted.
- To prevent the windscreen washer system from starting up automatically, the rain sensor will be deactivated.
- Air-recirculation mode is activated.
- The rear window wiper will be deactivated.
- The windows and the sliding sunroof will be closed.
- Parking Assist PARKTRONIC will be deactivated.
- Active Brake Assist will be deactivated, if applicable.
- **Vehicles with 360° camera:** the front image will be activated after approximately eight seconds.

If one of the settings cannot be selected, this will be indicated by a X after the respective setting.

Pressing Switch off will cancel car wash mode. Car wash mode will automatically be deactivated above a speed of 20 km/h.

You can also switch off car wash mode via the MBUX multimedia system (⟶ page 651).

THE FOLLOWING SETTINGS WILL BE RESET WHEN CAR WASH MODE IS DEACTIVATED:

- The outside mirrors will be folded out.
- The rain sensor will be activated.
- Air-recirculation mode will be deactivated.
- The windows and the sliding sunroof will remain closed.
- The rear window wiper will be activated.
- Parking Assist PARKTRONIC will be reset to the previously selected setting.
- Active Brake Assist will be activated, if applicable.
- **Vehicles with 360° camera:** the front image will be deactivated at speeds above 18 km/h.

Activating/deactivating car wash mode

Requirements

- The vehicle is stationary.
- The vehicle is switched on.

Multimedia system:

ACTIVATING/DEACTIVATING CAR WASH MODE

► Select Car wash mode.

ⓘ For an overview of the settings made when you activate car wash mode (⟶ page 650).

ⓘ The car wash mode settings are reset upon deactivation.

ⓘ Car wash mode will be automatically deactivated as soon as your speed exceeds 20 km/h.

Information on using a high-pressure cleaner

⚠ **WARNING**
Risk of an accident when using high-pressure cleaners with round-spray nozzles

The water jet can cause externally invisible damage.

Components damaged in this way may unexpectedly fail.

► Do not use a high-pressure cleaner with round-spray nozzles.

► Have damaged tyres or chassis parts replaced immediately.

NOTE
Damage to component parts due to improper high-pressure cleaning

Components can be damaged if the distance of the high-pressure nozzle is too small.

- Maintain a minimum distance of about 30 cm between the high-pressure nozzle and car parts.
- Do not use a high-pressure cleaner with a round-spray nozzle.
- Keep the water jet moving constantly while cleaning.
- Do not clean the following components with the high-pressure cleaner:
  - electrical components
  - plug connectors
  - reversing camera
  - drivetrain
  - seals
  - hoses

NOTE
Damage caused by the use of a high-pressure cleaner in the vehicle interior

The pressurised water created by the high-pressure cleaner and the associated spray could cause considerable damage to the vehicle.

- Never use a high-pressure cleaner in the vehicle interior.

NOTE
Damage to the emissions control system due to improper cleaning

Cleaning the system when it is warm or the direct effect of water jets in the exhaust pipe can damage the emissions control system.

- Clean the system only when it is cold.
- Do not direct the water jet into the exhaust pipe.

WASHING THE ENGINE

NOTE
Damage and malfunctions due to washing the engine

- To prevent damage and malfunctions of the engine, observe the following points:
  - when using high-pressure or steam cleaners, do not point the water jet directly at electrical components and the end of electric cables.
  - make sure that no water enters the air intake, ventilation and airing openings.
  - use preservative agents on the engine after washing it.
  - protect the belt drive from preservation agents.

Washing the vehicle by hand

Observe the legal requirements. Forexample, in a number of countries, washing by hand is permitted only in specially designated wash bays.

- ► Wash the vehicle with lukewarm water and a soft car sponge. Do not expose the vehicle to direct sunlight when washing the vehicle.
- ► Use a mild cleaning agent, e.g. a car shampoo approved for Mercedes-Benz.
- ► Carefully spray the vehicle with water and dry off with a chamois. Ensure that the water jet is not pointed directly towards air inlet grilles.

When operating the vehicle in winter, remove all traces of road salt deposits carefully and as soon as possible.

Notes on paintwork care

NOTE
Paintwork damage and corrosion due to inadequate care

Failure to promptly and thoroughly remove dirt from bird droppings or other residue could result in paintwork damage and corrosion at a later date.

► Clean dirt off paint and matt finish thoroughly and as soon as possible.

Observe the notes on cleaning and care to avoid paintwork damage.

PAINT

- Insect remnants: soak with insect remover and then wipe the treated areas clean.
- Bird droppings: soak with water and then wipe the treated areas clean.
- Tree resin, oils and greases: remove by rubbing gently with a cloth soaked in surgical spirit or lighter fluid.
- Coolant and brake fluid: remove with a damp cloth and clean water.
- Tar stains: use tar remover.
- Wax: use silicone remover.
- Do not attach stickers, films or similar materials.
- Remove any staining as soon as possible.

MATT FINISH

- Only use care products approved for Mercedes-Benz.
- Do not polish the vehicle and light-alloy wheels.
- Only use car washes that comply with the latest engineering standards. If in doubt, always consult the car wash operator, in particular whether the car wash is suitable for cleaning and care of matt paint finishes.
- Do not use car wash programmes with a final hot wax treatment.
- Do not use paint cleaners, buffing or polishing products, gloss preservers, e.g. wax.
- Always have paintwork repairs carried out at a qualified specialist workshop.

Notes on care of vehicle parts

WARNING
Risk of injury if unsuitable climbing aids are used

IN THE EVENT THAT YOU USE OPENINGS IN THE BODYWORK OR ATTACHMENTS AS STEPS, YOU COULD:

- Slip and/or fall.
- Damage the vehicle and thus slip and fall.

► Always use non-slip, stable climbing aids, e.g. a suitable ladder.

WARNING
Risk of entrapment if the windscreen wipers are switched on while the windscreen is being cleaned

If the windscreen wipers are set in motion while you are cleaning the windscreen or wiper blades, you can be trapped by the wiper arm.

- Always switch off the windscreen wipers and the ignition before cleaning the windscreen or wiper blades.

WARNING
Risk of burns from the tailpipe and tailpipe trims

The exhaust tailpipe and tailpipe trims can become very hot. If you come into contact with these parts of the vehicle, you could burn yourself.

- Always be particularly careful around the tailpipe and the tailpipe trims and supervise children especially closely in this area.
- Allow vehicle parts to cool down before touching them.

NOTE
Damage caused by the use of openings in the bodywork or detachable part as a step

Using the lower guide of the sliding door (carriage) as a step can damage the trim and/or mechanism of the sliding door.

- Do not use the guide of the sliding door (carriage) as a step.

Information on suitable cleaning agents or cleaning cloths can be obtained from a qualified specialist workshop.

To prevent damage to the vehicle, observe the notes on cleaning and care of the following vehicle parts:

WHEELS AND RIMS

- Use water and acid-free alloy wheel cleaner.
- Do not use acidic alloy wheel cleaners to remove brake dust. Otherwise, wheel bolts and brake components could be damaged.
- To avoid corrosion of brake discs and brake linings, drive for a few minutes after cleaning before parking the vehicle. The brake discs and brake linings will heat up and dry out.

WINDOWS

- Clean the windows on the inside and outside with a damp cloth and with a cleaning agent recommended for Mercedes-Benz.
- Do not use dry cloths, abrasive cleaning agents or cleaners containing solvents to clean the insides of windows.

WIPER BLADES

NOTICE
Risk of damage to the wiper blades due to incorrect cleaning

The wiper blades are coated with graphite. This coating may be removed or become damaged during cleaning.

As a consequence, wiping quality and performance could be impaired and may result in the wipers producing noises.

- ► To protect the coating, do not clean the wiper blades.
- ► If the wiper blades are very dirty, they can be cleaned with a soft, damp cloth. To do this, gently pull the cloth over the wiper lip with minimal pressure.

EXTERIOR LIGHTING

- Clean the lenses with a wet sponge and mild cleaning agent, suchas car shampoo.
- Use only cleaning agents or cloths suitable for plastic lenses.

SENSORS

- Clean the sensors in the front and rear bumpers with a soft cloth and car shampoo (⟶ page 391).
- When using a high-pressure cleaner, maintain a minimum distance of 30 cm.

360° CAMERA

- Open the camera cover with the multimedia system (⟶ page 439).
- Use clean water and a soft cloth to clean the camera lens.
- Do not use a high-pressure cleaner.

SLIDING DOOR

- Remove foreign objects from the vicinity of the contact plates and contact pins of the sliding door.
- Clean the contact plates and contact pins with a mild cleaning agent and a soft cloth.
- Do not oil or grease the contact plates or the contact pins.

TAILPIPES

- Clean with a cleaning agent recommended for Mercedes-Benz, especially in the winter and after washing the vehicle in a car wash.
- Do not use acidic cleaning agents.

TRAILER HITCH

- Observe the notes on care in the trailer hitch manufacturer's instruction manual.
- Do not clean the ball neck with a high-pressure cleaner or solvent.
- Remove traces of rust on the ball, e.g.with a wire brush.
- Remove dirt with a lint-free cloth.
- After cleaning, lightly oil or grease the ball head.

ⓘ Before using trailers with anti-swerve coupling, refer to the manufacturer's instruction manual.

Notes on cleaning and care of the interior

WARNING
Risk of injury from plastic parts breaking off after the use of solvent-based care products

Care and cleaning products containing solvents can cause surfaces in the cockpit to become porous. When the airbags are deployed, plastic parts may break away.

- Do not use any care or cleaning products containing solvents to clean the cockpit.

WARNING
Risk of injury or fatal injuries from bleached seat belts

Bleaching or dyeing seat belts can severely weaken them.

This can, for example, cause seat belts to tear or fail in an accident.

- Never bleach or dye seat belts.

DANGER
Risk of fatal injuries due to electric shock

If you clean the 230 V socket with a wet cloth, you can receive an electric shock.

There is a risk of fatal injury!

- Avoid the area around the 230 V socket when cleaning.

NOTE
Damage to property due to incorrect leather care

The steering wheel, seat covers and other parts of the vehicle interior can be made of leather.

Leather becomes brittle and can crack if it is incorrectly cared for or cleaned.

- If it gets dirty, thoroughly wipe it with a damp cloth (water or mild soapy water) or use leather care agents or cleaners that have been recommended and approved by Mercedes-Benz. Then wipe it over again with a dry cloth.
- Do not use a microfibre cloth for cleaning.
- Do not soak the leather.
- Do not use cleaning agents containing solvents such as tar remover or wheel cleaner, polishes or waxes.

NOTE
Property damage due to disinfectants

The interior includes a number of sensitive surfaces such as displays, plastics and leather.

Disinfectants can contain alcohol and other substances that penetrate and damage surfaces. Technology behind buttons and displays can also be damaged.

- Do not use disinfectant on interior surfaces.

To prevent damage to the vehicle, observe the following notes for cleaning and care:

SEAT BELTS

- Clean with lukewarm, soapy water.
- Do not use chemical cleaning agents.
- Do not dry seat belts by heating them to over 80°C or exposing them to direct sunlight.

DRIVER DISPLAY

- Switch off the driver display and allow it to cool.
- Clean the surface carefully with a microfibre cloth and a suitable display cleaning product (TFT LCD).
- Do not use any other agents.

DIGITAL INSIDE MIRROR

- Clean the mirror glass with a cloth moistened with glass cleaner.
- Clean the light sensors of the inside mirror with a dry cotton cloth.
- Do not spray the glass cleaner on the mirror glass.
- Do not use any other agents.

PLASTIC TRIM

- Clean with a damp microfibre cloth.
- If very dirty: use a cleaning agent recommended for Mercedes-Benz.
- Do not attach stickers, films or similar materials.
- Do not allow to come into contact with cosmetics, insect repellent or sun creams.

HEADLINER

- Clean with a brush or dry shampoo.

CARPET

- Use a carpet and textile cleaning agent recommended for Mercedes-Benz.

GENUINE LEATHER SEAT COVERS

> **NOTE**
> Damage caused by wrong cleaners
>
> ► Do not use solvent-based cleaning agents such as tar remover or wheel cleaner; neither should you use polishes or waxes. Otherwise you may damage the finish.

- Clean with a damp cloth and then wipe with a dry cloth.
- Leather care: use a leather care agent recommended for Mercedes-Benz.
- Do not allow the leather to become too damp.
- Do not use a microfibre cloth.

IMITATION LEATHER SEAT COVERS

- Vacuum up dirt suchas crumbs or dust and then use a damp cotton cloth and a 1% soap solution to clean the entire seat cover.
- Use cleaning and care products recommended for Mercedes-Benz.
- Do not use a microfibre cloth.
- Do not use any oil-based cleaning and care products.
- Do not spot-clean.

CLOTH SEAT COVERS

- Vacuum up dirt suchas crumbs or dust and then use a damp microfibre cloth and a 1% soap solution to clean the entire seat cover.
- Use cleaning and care products recommended for Mercedes-Benz.
- Do not use any oil-based cleaning and care products.
- Do not spot-clean.

STEERING WHEEL AND GEAR OR SELECTOR LEVER

- Clean with a damp cloth.

STEERING WHEEL MADE FROM GENUINE LEATHER

NOTE
Damage caused by wrong cleaners

▶ Do not use solvent-based cleaning agents such as tar remover or wheel cleaner; neither should you use polishes or waxes. Otherwise you may damage the finish.

- Clean with a damp cloth and a 1% soap solution and then wipe with a dry cloth.
- If very dirty: use a cleaning agent recommended for Mercedes-Benz.
- Leather care: use a leather care agent recommended for Mercedes-Benz.
- Do not allow the leather to become too damp.
- Do not use a microfibre cloth.

ⓘ Leather is a natural product. It exhibits natural surface properties, suchas differences in structure, marks caused by growth and injury or subtle colour differences.

PEDALS AND FLOOR MATS

- Clean with a damp cloth.
- Do not use any cleaning and care products.

GENUINE WOOD AND TRIM ELEMENTS

- Clean with a microfibre cloth.
- Black piano-lacquer look: clean with a damp cloth and soapy water.
- If very dirty: use a cleaning agent recommended for Mercedes-Benz.
- Do not use any cleaning agents, polishes or waxes containing solvents.

VEHICLE INTERIOR

- Clean with a damp cloth.
- Do not use a high-pressure cleaner.
- Allow the vehicle interior to dry completely after cleaning.
- Do not allow liquids to penetrate into gaps or cavities.

CURTAINS

- The curtains may be dry-cleaned only.
- Do not wash the curtains.

Back to Contents

Breakdown assistance

This interactive PDF works like a website – tap or click a button to jump straight to where you want to go.
You can return here at any time via the navigation bar at the top left.

Emergency
Mercedes-Benz emergency call system
Flat tyre
Battery
Towing or tow-starting
Electrical fuses
Vehicle tool kit

Emergency

Removing the safety vest

The safety vest is located in the door stowage compartment in the driver's door.

► Remove the safety vest out of the door stowage compartment.

ⓘ Safety vests can also be stored in the door stowage compartment of the front passenger door. Observe the legal requirements of the individual countries.

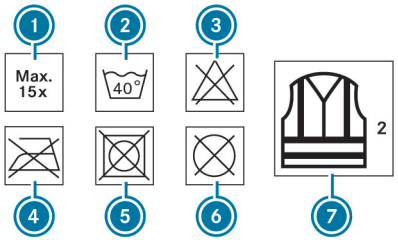

1. Maximum number of washes
2. Maximum wash temperature
3. Do not bleach
4. Do not iron
5. Do not tumble dry
6. Do not dry-clean
7. Class 2 safety vest

The requirements defined by the legal standard are only fulfilled if the safety vest is the correct size and is fully closed.

REPLACE THE SAFETY VEST IN THE FOLLOWING CASES:

- The reflective strips are damaged or dirty
- The maximum permissible number of washes is exceeded
- The fluorescence property decreases, e.g. due to permanent exposure to sunlight.

DISPOSE OF THE SAFETY VEST IN AN ENVIRONMENTALLY FRIENDLY WAY:

- Please contact your local waste disposal company.

Warning triangle

REMOVING THE WARNING TRIANGLE

The warning triangle is located in the storage compartment in the driver's door.

► Take the warning triangle out of the storage compartment.

SETTING UP THE WARNING TRIANGLE

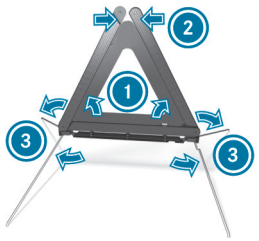

- Fold side reflectors (1) upwards to form a triangle and lock using the upper snap fastener (2).
- Fold the feet (3) down and out to the side.

Removing the first-aid kit (soft sided)

The first-aid kit (soft sided) is located in the storage compartment in the front passenger door.

- Remove the first-aid kit (soft sided) from the storage compartment.

Removing the fire extinguisher

> **WARNING**
> Risk of accident due to an incorrectly secured fire extinguisher in the driver's footwell
>
> A fire extinguisher may impede pedal travel or block a depressed pedal.
>
> This jeopardises the operating and road safety of the vehicle.
>
> The fire extinguisher can be flung around and injure the driver or other vehicle occupants.
>
> - Always store and secure the fire extinguisher in the bracket.
> - Do not remove the fire extinguisher while driving.

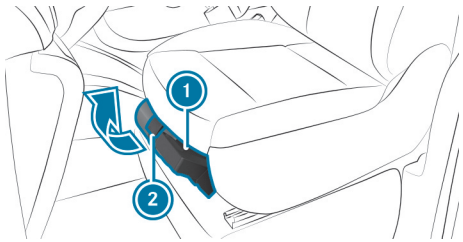

- Open the clasp on the holder (2).
- Remove the fire extinguisher (1) from its holder.

For vehicles with a swivelling front seat, the holder containing the fire extinguisher is located at the side of the seat box.

Please read the instructions on the fire extinguisher carefully and familiarise yourself its operation. Have the fire extinguisher refilled after each use and

checked every one or two years. The fire extinguisher may otherwise fail in an emergency.

Observe the legal requirements of the country in which you are currently driving.

Mercedes-Benz emergency call system

Information on the Mercedes-Benz emergency call system

The Mercedes-Benz emergency call system only functions in areas where mobile phone coverage is available from the relevant contract partner. Insufficient network coverage from the relevant contract partner may result in an emergency call not being transmitted.

The vehicle must be switched on before an automatic emergency call can be made.

The Mercedes-Benz emergency call system is available for your vehicle for 10 years ex works.

Overview of the Mercedes-Benz emergency call system

The Mercedes-Benz emergency call system can help to decisively reduce the time between an accident and the arrival of emergency services at the site of the accident. It helps locate an accident site in places that are difficult to access.

The emergency call can be triggered automatically (→ page 664).

You also have the option of triggering the emergency call manually (→ page 665). Only make emergency calls if you or others are in need of rescue. Do not make an emergency call in the event of a breakdown or a similar situation.

MESSAGE IN THE MEDIA DISPLAY:
SOS NOT READY: the vehicle is not switched on or the emergency call system is malfunctioning.

This does not necessarily indicate a total failure of the emergency call system. Emergency calls can still be transmitted.

The display refers only to the vehicle and does not take account of the availability of mobile phone networks and the Mercedes-Benz emergency call centre.

The functional readiness of the emergency call system on the vehicle can be seen when the SOS NOT READY display disappears once the vehicle is switched on.

During an active emergency call, SOS appears in the display.

You can find more information on the regional availability of the Mercedes-Benz emergency call system at: https://www.mercedes-benz-mobile.com/extra/ecall/

ⓘ If there is a malfunction of the emergency call system, the speakers, microphone, airbag or the SOS button, for example, are faulty.

YOU CAN RECOGNISE A FAULT IN THE EMERGENCY CALL SYSTEM BY THE FOLLOWING DISPLAYS:

- The red SOS NOT READY message appears in the display of the instrument cluster or in the media display.
- The SOS button lights up red continuously.

Triggering an automatic Mercedes-Benz emergency call

Requirements:

- The vehicle is switched on.
- The starter battery is sufficiently charged.

THE MERCEDES-BENZ EMERGENCY CALL SYSTEM AUTOMATICALLY INITIATES AN EMERGENCY CALL:

- After activation of the restraint systems such as airbags or seat belt tensioners after an accident
- After an automatically initiated emergency stop by Active Emergency Stop Assist

WHEN THE EMERGENCY CALL IS MADE:

- A voice connection is made to the Mercedes-Benz emergency call centre.
- A message with accident data is transmitted to the Mercedes-Benz emergency call centre.

  The Mercedes-Benz emergency call centre can transmit the vehicle position data to one of the public emergency services call centres.
- Under certain circumstances data is also transmitted in the voice channel to the Mercedes-Benz emergency call centre.

  This allows measures for rescue, recovery or towing to a Mercedes-Benz Service Centre to be initiated quickly.

The SOS button in the overhead control panel flashes until the emergency call is finished.

It is not possible to immediately end an automatic emergency call.

If the Mercedes-Benz emergency call system cannot connect to the Mercedes-Benz emergency call centre, the emergency call is automatically sent to the public emergency services call centre.

If no connection can be made to the public emergency services, a corresponding message appears in the display.

► Dial the emergency number **112** on your mobile phone.

IF AN EMERGENCY CALL HAS BEEN INITIATED:

- Remain in the vehicle if the road and traffic conditions permit you to do so until a voice connection is established with the emergency call centre operator.
- Based on the call, the operator decides whether it is necessary to call rescue teams and/or the police to the accident site.
- If no vehicle occupant answers, an ambulance is sent to the vehicle immediately.

Triggering a manual Mercedes-Benz emergency call

- **Via the SOS button in the overhead control panel:** press the SOS button for at least one second (→ page 498).
- **Via voice control:** use the MBUX Voice Assistant voice command Call the Mercedes accident centre (→ page 494).

WHEN THE EMERGENCY CALL IS MADE:

- A voice connection is made to the Mercedes-Benz emergency call centre.
- A message with accident data is transmitted to the Mercedes-Benz emergency call centre.

  The Mercedes-Benz emergency call centre can transmit the vehicle position data to one of the public emergency services call centres.
- Remain in the vehicle if the road and traffic conditions permit you to do so until a voice connection is established with the emergency call centre operator.
- Based on the call, the operator decides whether it is necessary to call rescue teams and/or the police to the accident site.
- Under certain circumstances data is also transmitted in the voice channel to the Mercedes-Benz emergency call centre.

  This allows measures for rescue, recovery or towing to a Mercedes-Benz Service Centre to be initiated quickly.

If the Mercedes-Benz emergency call system cannot connect to the Mercedes-Benz emergency call centre, the emergency call is automatically sent to the public emergency services call centre.

If no connection can be made to the public emergency services, a corresponding message appears in the media display.

- Dial the emergency number **112** on your mobile phone.

ENDING AN UNINTENTIONAL MERCEDES-BENZ EMERGENCY CALL

- Select on the multifunction steering wheel.

Transmitted data Mercedes-Benz with the Mercedes-Benz emergency call

In the event of an automatic or manual emergency call, data will be transferred to the Mercedes-Benz emergency call centre or to the public emergency services call centre.

THE FOLLOWING DATA IS TRANSMITTED:

- Vehicle's GPS position data
- GPS position data on the route (a few 100 m before the incident)
- Direction of travel
- Vehicle identification number
- Vehicle drive type
- Estimated number of people in the vehicle

  The detection is based on the number of closed seat belt buckles on the front seats and on the first and second row seats in the rear passenger compartment.
- Whether the emergency call was initiated manually or automatically
- Time of the accident
- Language setting on the multimedia system
- Digital Extras available or not

  This determines whether the call can be forwarded to Mercedes-Benz Support if required.

Public emergency services call centres may not have access to the full range of technical equipment required to process the transmitted data.

FOR ACCIDENT CLARIFICATION PURPOSES, THE FOLLOWING MEASURES CAN BE TAKEN UP TO AN HOUR AFTER THE EMERGENCY CALL HAS BEEN INITIATED:

- The current vehicle position can be called up.
- A voice connection to the vehicle occupants can be established.

Function of the emergency call system self-diagnosis

Your car verifies the operability of the emergency call system each time the ignition is ON.

IN THE EVENT OF A SYSTEM MALFUNCTION, YOU WILL BE INFORMED BY THE FOLLOWING SIGNALS:

- The SOS NOT READY message in the driver display or the red SOS NOT READY message on the media display, if available
- The flashing indicator lamp in the overhead control panel

Please, make sure, that during 30 seconds after switching ignition ON the red indicator SOS NOT READY in the upper right corner of the multimedia display is switched OFF, this means the emergency call system passed diagnostics successfully.

Flat tyre

Notes on flat tyres

WARNING
Risk of accident due to a flat tyre

A flat tyre strongly impairs the vehicle's driving characteristics, as well as its steering and braking characteristics.

- Do not drive with a flat tyre.
- Replace the flat tyre with the spare wheel. Alternatively, consult a qualified specialist workshop.

You will find a sticker with the Mercedes-Benz Service24h telephone number on the B-pillar on the driver's side, for example.

IN THE EVENT OF A FLAT TYRE THE FOLLOWING POSSIBLE SOLUTIONS ARE AVAILABLE, DEPENDING ON YOUR VEHICLE'S EQUIPMENT:

- **Vehicles with Mercedes-Benz Support:** you can make a call for breakdown assistance via the overhead control panel in the case of a breakdown (⟶ page 498).
- **Vehicles with an emergency spare wheel or spare wheel:** change the wheel (⟶ page 700).

Battery

Notes on the 12-V-battery

WARNING
Risk of an accident due to work carried out incorrectly on the battery

Work carried out incorrectly on the battery can, for example, lead to a short circuit. This can restrict functions relevant for safety systems and impair the operating safety of your vehicle.

YOU COULD LOSE CONTROL OF THE VEHICLE IN THE FOLLOWING SITUATIONS IN PARTICULAR:

- when braking
- in the event of abrupt steering manoeuvres and/or when the vehicle's speed is not adapted to the road conditions

► In the event of a short circuit or a similar incident, contact a qualified specialist workshop immediately.

► Do not drive on.

► Always have work on the battery carried out at a qualified specialist workshop.

- Further information on ABS (⟶ page 393)
- Further information on ESP® (⟶ page 394)

For safety reasons, Mercedes-Benz recommends that you only use batteries which have been approved for your vehicle by Mercedes-Benz. These batteries provide increased impact protection to prevent vehicle occupants from suffering acid burns should the battery be damaged in an accident.

WARNING
Risk of explosion due to electrostatic charge

Electrostatic charge can ignite the highly explosive gas mixture in the battery.

► To discharge any electrostatic charge that may have built up, touch the metal vehicle body before handling the battery.

The highly flammable gas mixture is created while the battery is charging and when jump-starting.

Make sure that neither you nor the battery is electrostatically charged.

ELECTROSTATIC CHARGE CAN OCCUR IN THE FOLLOWING CASES, FOR EXAMPLE:

- you are wearing synthetic clothing.
- there is friction between your clothing and the seat.
- you drag or push the battery across a carpet or other synthetic materials.
- you rub the battery with rags or cloths.

WARNING
Danger of chemical burns from the battery acid

Battery acid is caustic.

- Avoid contact with the skin, eyes or clothing.
- Do not lean over the battery.
- Do not inhale battery gases.
- Keep children away from the battery.
- Immediately rinse battery acid off thoroughly with plenty of clean water and seek medical attention immediately.

ENVIRONMENTAL NOTE
Environmental damage due to improper disposal of batteries

Batteries contain pollutants. It is illegal to dispose of them with the household rubbish.

- Dispose of batteries in an environmentally responsible manner. Take discharged batteries to a qualified specialist workshop or to a collection point for used batteries.

If you have to disconnect the 12-V-battery, contact a qualified specialist workshop.

Observe the safety notes and protective measures when handling batteries.

Risk of explosion in the event of improper use of the 12-V-battery.

Fire, open flames and smoking are prohibited when handling the battery. Avoid creating sparks.

Electrolyte or battery acid is corrosive. Avoid contact with the skin, eyes and clothing. Wear suitable protective clothing, in particular gloves, an apron and a safety mask. Immediately rinse electrolyte acid splashes off with clean water. You must consult a doctor.

Do not place any heavy objects on the surface of the battery and do not lean or support yourself on the battery.

Wear eye protection.

Keep children at a safe distance.

Observe this Owner's Manual.

THE FOLLOWING MUST BE OBSERVED IF YOU DO NOT INTEND TO USE THE VEHICLE FOR AN EXTENDED PERIOD OF TIME:

- **If available:** activate standby mode (→ page 390).
- Alternatively: connect the battery to a charger recommended by Mercedes-Benz or contact a qualified specialist workshop regarding disconnecting the battery.

INSTALLATION LOCATIONS

YOUR VEHICLE MAY BE EQUIPPED WITH FOLLOWING 12-V-BATTERIES, DEPENDING ON THE EQUIPMENT VERSION:

- Starter battery in the seat box of the right-hand front seat
- Support battery in the seat box of the right-hand front seat
- Auxiliary battery in the seat box of the left-hand front seat

Notes on the 48 V battery

WARNING
Risk of an accident due to work carried out incorrectly on the battery

Work carried out incorrectly on the battery can, for example, lead to a short circuit. This can restrict functions relevant for safety systems and impair the operating safety of your vehicle.

YOU COULD LOSE CONTROL OF THE VEHICLE IN THE FOLLOWING SITUATIONS IN PARTICULAR:

- when braking
- in the event of abrupt steering manoeuvres and/or when the vehicle's speed is not adapted to the road conditions

► In the event of a short circuit or a similar incident, contact a qualified specialist workshop immediately.

► Do not drive on.

► Always have work on the battery carried out at a qualified specialist workshop.

- Further information on ABS (⟶ page 393)
- Further information on ESP®(⟶ page 394)

ENVIRONMENTAL NOTE
Environmental damage due to improper disposal of batteries

Batteries contain pollutants. It is illegal to dispose of them with the household rubbish.

► Li-ion Dispose of batteries in an environmentally responsible manner. Take discharged batteries to a qualified specialist workshop or to a collection point for used batteries.

Only have work on the 48 V battery carried out by a qualified specialist workshop.

Observe the safety notes and protective measures when handling batteries.

Risk of explosion in the event of improper use of the 48 V battery.

The surface of the 48 V battery may be hot.

Fire, open flames and smoking are prohibited when handling the battery. Avoid creating sparks.

Electrolyte or battery acid is corrosive. Avoid contact with the skin, eyes and clothing. Wear suitable protective clothing, in particular gloves, an apron and a safety mask. Immediately rinse electrolyte or acid splashes off with generous amounts of clear water. You must consult a doctor.

Do not place any heavy objects on the surface of the battery and do not lean or support yourself on the battery.

Do not carry out any work on the battery. Always have work on the battery carried out at a qualified specialist workshop. Do not discon-

nect the battery yourself. Do not remove the battery yourself. Do not try to open the battery.

Keep children at a safe distance.

Wear eye protection.

Observe these Operating Instructions.

THE FOLLOWING MUST BE OBSERVED IF YOU DO NOT INTEND TO USE THE VEHICLE FOR AN EXTENDED PERIOD OF TIME:

- **If available:** activate standby mode (→ page 390).

Notes on starting assistance and on charging the 12 V battery

When charging the battery and during starting assistance, always use the jump-start connection point in the engine compartment.

WARNING
Risk of explosion from a frozen battery

A discharged battery may freeze at temperatures slightly above or below freezing point.

During starting assistance or battery charging, battery gas can be released.

► Always allow a battery to thaw before charging it or performing starting assistance.

If the warning/indicator lamps do not light up in the driver display at temperatures around or below freezing, it is highly probable that the discharged battery has frozen.

IN THIS CASE, OBSERVE THE FOLLOWING POINTS:

- Do not give the vehicle starting assistance or charge the battery.
- The service life of a battery that has been thawed may be reduced drastically.
- The starting behaviour may deteriorate, particularly at low temperatures.
- It is recommended that you have a thawed battery checked at a qualified specialist workshop.

WARNING
Risk of explosion due to explosive mixture of gases

An explosive mixture of gases can escape from the battery during charging and starting assistance.

► Fire, naked flames, smoking and creating sparks must be avoided.

► Make sure there is adequate ventilation.

► Do not stand over the battery.

WARNING
Risk of explosion due to the ignition of hydrogen gas

If there is a short circuit or sparks are created, there is a danger of hydrogen gas igniting when you charge the battery.

- Take care that the positive terminal of a connected battery does not come into contact with vehicle parts.
- Never place metal objects or tools on a battery.
- When connecting and disconnecting the battery, always observe the sequence of battery terminals described.
- During starting assistance, always take care to connect only battery terminals of identical polarity.
- During starting assistance, observe the sequence described for connecting and disconnecting the jump leads.
- Do not connect or disconnect the battery terminals with the engine running.

WARNING
Danger of chemical burns from the battery acid

Battery acid is caustic.

- Avoid contact with the skin, eyes or clothing.
- Do not lean over the battery.
- Do not inhale battery gases.
- Keep children away from the battery.
- Immediately rinse battery acid off thoroughly with plenty of clean water and seek medical attention immediately.

NOTE
Damage to the electronics due to unapproved chargers

If you charge an installed battery with a charger not approved for Mercedes-Benz, the on-board electronics can be damaged.

- Only use a charger approved for Mercedes-Benz which permits charging in the installed condition.
- Only charge the battery via the jump-start connection point.

NOTE
Damage caused by numerous or extended attempts to start the engine

Numerous or extended attempts to start the engine may damage the catalytic converter due to non-combusted fuel.

► Avoid numerous and extended attempts to start the engine.

OBSERVE THE FOLLOWING POINTS DURING STARTING ASSISTANCE AND WHEN CHARGING THE BATTERY:

- Only use undamaged jump leads/charging cables with a sufficient cross-section and insulated terminal clamps.
- Non-insulated parts of the terminal clamps must not come into contact with other metal parts while the jump leads/charging cables are connected to the battery or jump-start connection point.
- The jump leads/charging cables must not come into contact with any parts which may move when the engine is running.
- Always make sure that neither you nor the battery is electrostatically charged.
- Always keep away from fire and open flames.
- Do not lean over a battery.

OBSERVE THE ADDITIONAL FOLLOWING POINTS WHEN CHARGING THE BATTERY:

- Only use battery chargers tested and approved for Mercedes-Benz.
- Read the battery charger's Owner's Manual before charging the battery.

OBSERVE THE ADDITIONAL FOLLOWING POINTS DURING STARTING ASSISTANCE:

- Starting assistance may only be provided using vehicles batteries or appropriate jump start devices with a nominal voltage of 12 V.
- If the battery is fully discharged, attach the donor battery for a few minutes before attempting to start. This charges the discharged battery a little.
- The vehicles must not touch each other.
- **Vehicles with petrol engine:** only perform starting assistance when the engine and exhaust system are cold.

ⓘ Jump leads and further information regarding starting assistance can be obtained at any qualified specialist workshop.

Starting assistance and charging the 12-V-battery

PREPARE STARTING ASSISTANCE/CHARGING PROCESS

► Apply the parking brake.

► Shift the transmission to position P .

► Switch off the vehicle and all electrical consumers.

► Open the bonnet(⟶ page 639).

CONNECTING AND DISCONNECTING THE JUMP LEAD

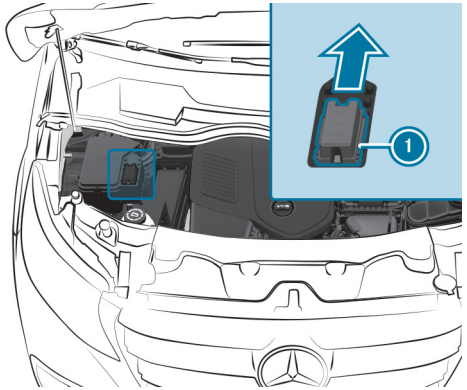

Example: jump-start connection point

- Slide the contact protection (1) of the jump-start connection point in the direction of the arrow.
  Positive terminal (5) of the jump-start connection point is visible.

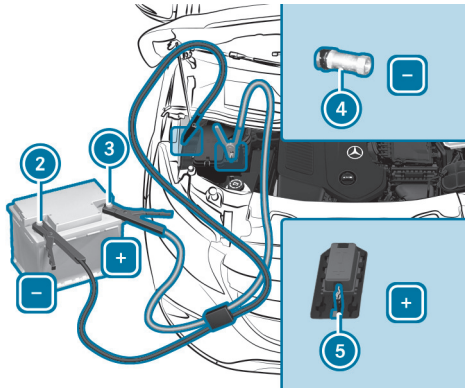

Terminal connection diagram

- Remove the cover from positive terminal (3) of the donor battery.
- Connect the positive terminal clamp of the jump lead to positive terminal (3) of the donor battery, and then to positive terminal (5) of the jump-start connection point.
- Connect the negative terminal clamp of the jump lead to negative terminal (2) of the donor battery, and then to earth contact (4) of your own vehicle.
- Start the engine of the donor vehicle and run it at idle speed.
- Start the vehicle and let the engine run for a while.
- Before disconnecting the jump leads, switch on an electrical consumer in your own vehicle, e.g. the rear window heater or the lighting.
- Disconnect the negative terminal clamp of the jump lead from earth contact (4) and then from negative terminal (2) of the donor battery.
- Disconnect the positive terminal clamp of the jump lead from positive terminal (5) on the jump-start connection point, and then from positive terminal (3) of the donor battery.
  Contact protection cover (1) is automatically returned forwards to its original position by the spring force and the jump-start connection point is sealed.
- Position the cover on positive terminal (3) of the donor battery.
- Have the battery checked at a qualified specialist workshop.

CHARGING THE 12 -V- BATTERY

NOTE
Damage to the electronics due to unapproved chargers

If you charge an installed battery with a charger not approved for Mercedes-Benz, the on-board electronics can be damaged.

- Only use a charger approved for Mercedes-Benz which permits charging in the installed condition.
- Only charge the battery via the jump-start connection point.

A battery charger specially adapted for Mercedes-Benz vehicles and tested and approved for Mercedes-Benz is available as an accessory.

You can obtain further information from a Mercedes-Benz service centre. Read the Owner's Manual for your charger before charging the battery.

Recharge the battery more frequently if you use the vehicle mainly for short trips and/or drive at low outside temperatures.

- Connect the battery charger to the positive terminal and earth contact in the same order as when connecting the donor battery in the starting assistance procedure.

If a battery is not installed and not in use, you should charge it every three months. This helps to counteract self-discharge and prevent damage to the battery.

Replacing the 12 -V- battery

- Observe the notes on the 12 -V- battery (⟶ page 668).

Mercedes-Benz recommends that you have the 12 -V- battery replaced at a qualified specialist workshop, e.g. at a Mercedes-Benz Service Centre.

IF YOU WANT TO REPLACE THE BATTERY YOURSELF, OBSERVE THE FOLLOWING INFORMATION:

- Always replace a faulty battery with a battery which meets the specific vehicle requirements.

  The vehicle is equipped with a maintenance-free AGM battery. Full vehicle functionality is only guaranteed with an AGM battery. For safety reasons, Mercedes-Benz recommends that you only use batteries which have been tested and approved for your vehicle by Mercedes-Benz.
- Carry over detachable parts such as the vent hose, elbow fitting or terminal cover from the battery which is to be replaced.
- Make sure that the vent hose is always connected to its original opening on the battery side.

  Fit the existing or newly supplied stop plugs.

  Otherwise, gases or battery acid could escape.
- Make sure that the detachable parts are connected in the same way as before.

Towing or tow-starting

Overview of permissible towing methods

In the event of a breakdown, Mercedes-Benz recommends that you have the vehicle transported instead of towed.

Use a tow rope or a tow bar when towing with both axles on the ground. Do not use tow bar systems.

NOTE
Damage from automatic braking

IF ONE OF THE FOLLOWING FUNCTIONS IS ACTIVATED, THE VEHICLE WILL BRAKE AUTOMATICALLY IN CERTAIN SITUATIONS:

- Active Brake Assist
- Active Distance Assist DISTRONIC
- HOLD function
- Active Parking Assist

To avoid damage to the vehicle, deactivate these systems, for example, while towing or in a car wash.

NOTE
Damage to the vehicle due to towing away incorrectly

► Observe the instructions and notes on towing away.

PERMISSIBLE TOWING METHODS

	Both axles on the ground	Front axle raised	Rear axle raised
Vehicles with rear-wheel drive	Yes, no further than 50 km at 50 km/h	No	Yes, if the steering wheel is fixed in the centre position with a steering wheel lock. Maximum 50 km at 50 km/h
Vehicles with all-wheel drive (4MATIC)	Yes, no further than 50 km at 50 km/h	No	No

Towing with a raised axle: towing should be done by a towing company.

A towing vehicle with lifting equipment is required for vehicle transport (→ page 679).

Towing the vehicle with both axles on the ground

- Observe the notes on permissible towing methods (→ page 676).
- Make sure that the battery is connected and charged.

A DISCHARGED BATTERY HAS THE FOLLOWING CONSEQUENCES:

- The vehicle cannot be switched on.
- It is not possible to release or apply the parking brake.
- It is not possible to shift the transmission to position N or P.

IN THE FOLLOWING CASES, ONLY TRANSPORT OF THE VEHICLE IS PERMISSIBLE:

- The transmission cannot be shifted to position N.
- If the driver display is down.

NOTE
Damage due to towing away at excessively high speeds or over long distances

The drivetrain could be damaged when towing at excessively high speeds or over long distances.

- A towing speed of 50 km/h must not be exceeded.
- A towing distance of 50 km must not be exceeded.

WARNING
Risk of accident when towing a vehicle which is too heavy

IF THE VEHICLE TO BE TOW-STARTED OR TOWED AWAY IS HEAVIER THAN THE PERMISSIBLE GROSS MASS OF YOUR VEHICLE, THE FOLLOWING SITUATIONS CAN OCCUR:

- the towing eye may become detached.
- the vehicle/trailer combination may swerve or overturn.

▶ Before tow-starting or towing away, check if the vehicle to be tow-started or towed away exceeds the permissible gross mass.

▶ Information on the vehicle's gross mass vehicle rating can be found on the vehicle identification plate (⟶ page 743).

▶ Fit the towing eye (⟶ page 680).

▶ Secure the towing device.

NOTE
Damage due to incorrect connection of the tow bar or improper use of the towing device

▶ Only connect the tow rope or tow bar to the towing eyes or the trailer tow hitch.

▶ Do not use the towing eyes to recover a vehicle.

▶ Switch on the vehicle.

▶ Deactivate automatic locking (⟶ page 185).

▶ Do not activate the HOLD function.

▶ Deactivate Active Brake Assist (⟶ page 400).

▶ Shift the transmission to position N (⟶ page 364).

▶ Do not open the driver's door or front passenger's door; the automatic transmission may otherwise automatically shift to position P.

▶ Release the parking brake (⟶ page 387).

WARNING
Risk of accident due to limited safety-related functions during the towing process

SAFETY-RELATED FUNCTIONS ARE LIMITED OR NO LONGER AVAILABLE IN THE FOLLOWING SITUATIONS:

- the vehicle is switched off.
- the brake system or power steering system is malfunctioning.
- the energy supply or the on-board electrical system is malfunctioning.

When your vehicle is towed away, significantly more effort may be required to steer and brake than is normally required.

▶ Use a tow bar.

▶ Make sure that the steering wheel can move freely before towing the vehicle away.

NOTE
Damage due to excessive tractive power

If you pull away sharply, the tractive power may be too high and the vehicles could be damaged.

- Pull away slowly and smoothly.

Loading the vehicle for transport

NOTE
Damage due to incorrect attachment

The vehicle may be damaged when lashing to chassis components.

- Only lash the vehicle at the wheels.

- Observe the notes on permissible towing methods (→ page 676).
- Connect the towing device to the towing eye to load the vehicle.

ⓘ You can also secure the towing device to the trailer hitch.

BEFORE LOADING THE VEHICLE

- Switch on the vehicle.
- Shift the transmission to position N.

ⓘ In the event of damage to the electrics, the automatic transmission P may be locked. To change to position N, provide the on-board electrical system with power (→ page 65).

- Release the parking brake.
- Load up the vehicle.

NOTE
Damage to the drive train due to incorrect positioning of the vehicle

- Do not position the vehicle above the connection point of the transport vehicle.

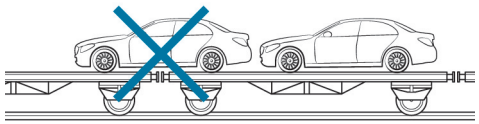

- Make sure that the front and rear axles come to rest on the same transportation vehicle.

AFTER LOADING THE VEHICLE

- Shift the transmission to position P.
- Deactivate tow-away protection (→ page 212).
- Use the parking brake to secure the vehicle against rolling away.

- Only secure the vehicle by the wheels.

Towing eye storage location

The towing eye is located in the vehicle tool kit (→ page 683).

Fitting/removing the towing eye

NOTE
Damage to the vehicle as a result of incorrect use of the towing eye or trailer hitch

The vehicle may sustain damage if the towing eye is used to haul the vehicle out of a ditch during recovery.

- Use the towing eye exclusively for towing the vehicle.
- Never use the towing eye to haul the vehicle out of a ditch during recovery.

FITTING AND REMOVING THE FRONT TOWING EYE

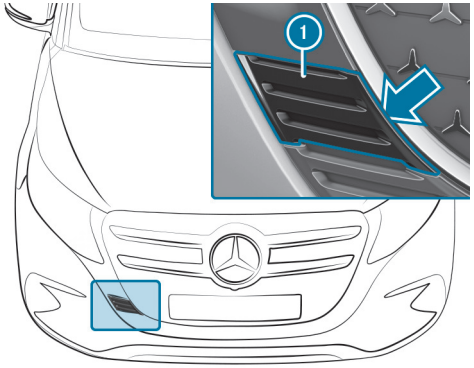

Fixture for the front towing eye in the bumper (example)

- Remove the towing eye from the vehicle tool kit (→ page 683).

FITTING

- Prise open the cover (1) from the bumper at the arrow and remove from the opening.
- Screw in the towing eye clockwise as far as it will go and tighten.

REMOVING

- Unscrew and remove the towing eye.
- Clip the cover (1) into the bumper.
- Stow the towing eye in the vehicle with the vehicle tool kit.

REAR TOWING EYE

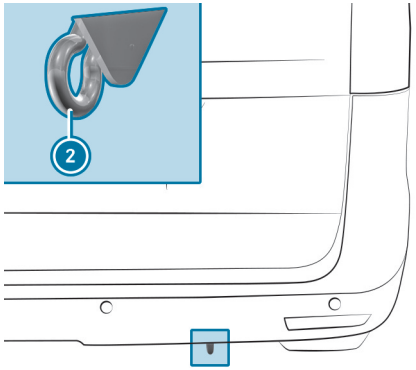

Rear towing eye under the bumper

- Attaching towing devices to the rear towing eye (2) for the purpose of tow starting or towing by other vehicles.
- If your vehicle is equipped with a trailer hitch, attach the towing device to the trailer hitch (⟶ page 759).
- Observe the notes on permissible towing methods (⟶ page 676).

Tow-starting the vehicle (vehicle emergency start)

VEHICLES WITH AUTOMATIC TRANSMISSION

NOTE
Damage to the automatic transmission due to tow-starting

The automatic transmission may be damaged in the process of tow-starting vehicles with automatic transmission.

- Vehicles with automatic transmission must not be tow-started.

- Observe the notes and information on starting assistance (⟶ page 65).

Electrical fuses

Notes on electrical fuses

WARNING
Risk of accident and injury due to overloaded lines

If you manipulate or bridge a faulty fuse or if you replace it with a fuse with a higher amperage, the electric line could be overloaded.

This could result in a fire.

- Always replace faulty fuses with specified new fuses containing the correct amperage.

If the new fuse which has been inserted also blows, have the cause traced and rectified at a qualified specialist workshop.

The fuse allocation chart and the information on the fuses can be found in the "Fuse allocation chart" Supplement.

Vehicle tool kit

Information on the vehicle tool kit

The vehicle tool kit is in the rear stowage compartment (⟶ page 683).

Apart from some country-specific variants, vehicles without a spare wheel are not equipped with tyre-change tool kit.

If your vehicle is equipped with a tyre-change tool kit, you can find it with the vehicle tool kit in the rear stowage compartment.

Some tools for changing a wheel are specific to the vehicle. For more information on which tyre-change tool kits are required and approved for performing a wheel change on your vehicle, consult a qualified specialist workshop.

REQUIRED TYRE-CHANGE TOOL KIT MAY INCLUDE THE FOLLOWING, FOR EXAMPLE:

- Jack
- Wheel spanner
- Ratchet ring spanner

ⓘ The jack has a maximum weight of 7.5 kg depending on the vehicle's equipment.
You will find the maximum load capacity of the jack stated on the adhesive label attached to the jack.
The jack is maintenance-free. In the event of a malfunction, please contact a qualified specialist workshop.

Stowage compartment in the rear

OPENING THE STOWAGE COMPARTMENT

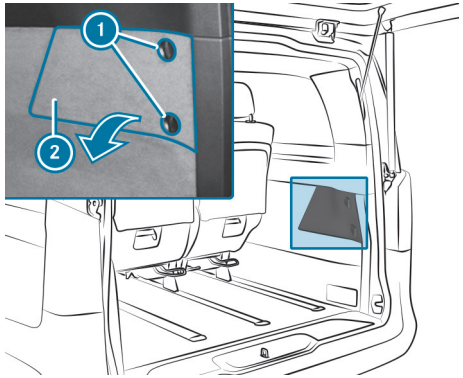

Stowage compartment in the rear on the right-hand side of the vehicle

- ► If necessary, fold up the rear seat.
- ► Turn top rotary catch ① clockwise and bottom rotary catch ① anti-clockwise.
- ► Remove cover ②.

REMOVING THE VEHICLE TOOL KIT AND JACK FROM THE TOOL HOLDER

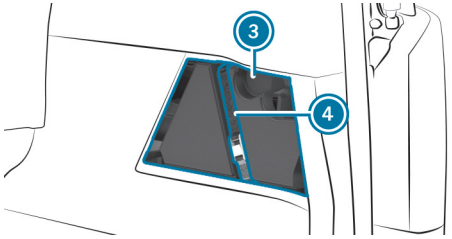

Stowage compartment with tool holder

- Remove clamping strap 4.
- Lift off tool holder cover 3.
- Carefully pull the vehicle tool kit and jack upwards out of the stowage compartment. Lift the jack slightly before removing it and turn it to a diagonal position in the stowage compartment.

STOWING THE VEHICLE TOOL KIT AND THE JACK

- Before stowing, wind the jack to the fully closed position and place it so that the handwheel is facing forwards and the plate is facing inwards.
- Place the jack and vehicle tool kit in the tool holder.
- Replace cover 3 of the tool holder.
- Tighten clamping strap 4.

CLOSING THE STOWAGE COMPARTMENT

- Put on cover 2.
- Turn top rotary catch 1 anti-clockwise and bottom rotary catch 1 clockwise.
- Fold down the rear seat.

Back to Contents

Wheels and tyres

This interactive PDF works like a website – tap or click a button to jump straight to where you want to go. You can return here at any time via the navigation bar at the top left.

Information on noise or unusual driving characteristics
Notes on regularly inspecting wheels and tyres
Information on driving with summer tyres
Information on M+S tyres
Notes on snow chains
Tyre pressure
Changing a wheel
Information on wheel and tyre combinations
Spare wheel

Information on noise or unusual driving characteristics

While driving, pay attention to vibrations, noises and unusual driving characteristics, e.g. pulling to one side. This may indicate damage to the wheels or tyres. If you suspect that a tyre is defective, reduce your speed. Stop the vehicle as soon as possible to check if wheels and tyres have been damaged or are no longer functioning properly. Hidden tyre damage could also be causing the unusual driving characteristics. If no signs of damage can be detected, have the tyres and wheels checked at a qualified specialist workshop.

Notes on regularly inspecting wheels and tyres

WARNING
Risk of injury due to damaged tyres

Damaged tyres can cause tyre pressure loss.

► Check the tyres regularly for signs of damage and replace any damaged tyres immediately.

Check the wheels and tyres of your vehicle for damage regularly, i.e. at least every two weeks, as well as after driving off-road or on rough roads. Damaged wheels can lead to a loss of tyre pressure.

LOOK OUT FOR THE FOLLOWING TYPES OF DAMAGE, FOREXAMPLE:

- cuts in the tyres
- punctures in the tyres
- tears in the tyres
- bulges on tyres
- deformation or severe corrosion on wheels

WARNING
Risk of aquaplaning due to insufficient tyre tread

Insufficient tyre tread will result in reduced tyre grip. There is a risk of an accident.

On a wet road surface the risk of aquaplaning is increased, in particular where speed is not adapted to suit the conditions.

► Check the tread depth and the condition of the tyre contact surface across the entire width of all tyres on a regular basis.

MINIMUM TREAD DEPTH FOR

- Summer tyres: 3 mm
- M+S tyres: 4 mm

► For safety reasons, replace the tyres before the legally-prescribed limit for the minimum tread depth is reached.

► Replace the tyres immediately if the legally-prescribed limit for the minimum tread depth is reached.

CONDUCT THE FOLLOWING CHECKS REGULARLY ON ALL WHEELS, AT LEAST ONCE A MONTH OR AS REQUIRED, E.G.BEFORE A LONG JOURNEY OR WHEN DRIVING OFF-ROAD:

- check the tyre pressure (→ page 693)

- check the valve caps

  Valves must be protected from moisture and dirt with valve caps specifically approved by Mercedes-Benz for your vehicle.
- Visually inspect the tread depth and the tyre tread across the whole tyre width

  The minimum tyre tread depth for summer tyres is 3 mm and for winter tyres 4 mm.

Information on driving with summer tyres

Summer tyres significantly lose elasticity and therefore traction and braking power at temperatures below 10 °C. Change the tyres on your vehicle to M+S tyres. Using summer tyres at very cold temperatures could cause tears to form, thereby damaging the tyres permanently. Mercedes-Benz cannot accept responsibility for this type of damage.

ONCE YOU HAVE FITTED THE SUMMER TYRES:

- Restart the tyre pressure monitoring system (⟶ page 696)
- Check the tyre pressures (⟶ page 693)

Information on M+S tyres

WARNING
Risk of an accident due to insufficient tyre tread

M+S tyres with a tread depth of less than 4 mm are not suitable for use in winter and do not provide sufficient grip.

► M+S tyres with a tread depth of less than 4 mm must be replaced immediately.

At temperatures below 10 °C use winter tyres or all-season tyres marked M+S.

Only winter tyres bearing the snowflake symbol in addition to the M+S marking provide the best possible grip in wintry road conditions.

Only these tyres allow driving safety systems, e.g. ABS and ESP® to also function optimally in winter. These tyres have been developed specifically for driving in snow.

Use M+S tyres of the same make and tread on all wheels to maintain safe handling characteristics.

Observe the maximum permissible speed specified for the M+S tyres you have fitted.

If you fit M+S tyres that have a lower maximum permissible speed than the maximum design speed of the vehicle, affix an appropriate information label in the driver's field of vision. You can obtain this at a qualified specialist workshop.

For vehicles with a limiter: you should also restrict the maximum design speed of the vehicle using the permanent limiter so that it does not exceed the maximum permissible speed for the M+S tyres (⟶ page 409).

ONCE YOU HAVE FITTED THE M+S WINTER TYRES, TAKE THE FOLLOWING MEASURES:

- Restart the tyre pressure monitoring system (⟶ page 696)
- Check the tyre pressure (⟶ page 695)

Notes on snow chains

Vehicles with rear wheel drive or all-wheel drive

WARNING
Risk of accident due to incorrectly fitted snow chains

If you have fitted snow chains to the front wheels, they may drag against the vehicle body or chassis components.

- Never fit snow chains to the front wheels.
- Only fit snow chains on the rear wheels in pairs.

NOTE
Damage to the body or suspension parts due to mounted snow chains

If you fit snow chains to the front wheels of four-wheel drive 4x4 vehicles, you may damage body or suspension parts.

- For all-wheel drive 4x4 vehicles, fit snow chains on the rear wheels only.

WARNING
Risk of accident due to snow chains breaking

If you drive too fast with snow chains, they can break, injure other persons, and damage the vehicle.

- Observe the maximum permissible speed for operation with snow chains.

NOTE
Damage to the wheel trim from fitted snow chains

If snow chains are fitted to steel wheels, the wheel trims can be damaged.

- Remove the wheel trims of steel wheels before fitting snow chains.

OBSERVE THE FOLLOWING NOTES WHEN USING SNOW CHAINS:

- Snow chains are only permissible for certain wheel/tyre combinations. You can obtain information on this matter at a qualified specialist workshop.
- For safety reasons, only use snow chains that have been specifically approved for your vehicle by Mercedes-Benz, or snow chains with the same quality standard.

- The snow chains must be retightened after driving approximately 1 km. This is the only way to ensure the snow chains are optimally fitted with clearance to adjacent components.
- Use snow chains only when the road surface is completely snow-covered. Remove the snow chains as soon as possible when you come to a road that is not snow-covered.
- Local regulations may restrict the use of snow chains. Observe the applicable regulations before fitting snow chains.
- If snow chains are fitted, the maximum permissible speed is 50 km/h.
- **Vehicles with Active Parking Assist:** do not use Active Parking Assist when snow chains are fitted.

ⓘ You can deactivate ESP® to start off (⟶ page 396). This allows the wheels to spin, achieving an increased propulsive force.

Tyre pressure

Notes on tyre pressure

WARNING
Risk of an accident due to tyre pressure that is insufficient or too high

TYRES WITH A PRESSURE THAT IS INSUFFICIENT OR TOO HIGH POSE THE FOLLOWING DANGERS IN PARTICULAR:

- The tyres can burst.
- The tyres can wear excessively and/or unevenly.
- The driving characteristics as well as the steering- and braking may be greatly impaired.

▶ Observe the recommended tyre pressures and check the tyre pressure of all tyres including the spare wheel:

- monthly
- when the load changes
- before embarking on a longer journey
- when the operating conditions change, e.g. off-road driving
- when driving at over 250 km/h

▶ Adjust the tyre pressure, if necessary.

DRIVING WITH TYRE PRESSURE THAT IS TOO HIGH OR TOO LOW CAN:

- shorten the service life of the tyres.
- contribute to tyre damage.
- adversely affect driving characteristics and thus driving safety, e.g. due to aquaplaning.

WARNING
Risk of accident due to repeated pressure drop in the tyres

The wheels, valves or tyres could be damaged.

Too low a tyre pressure can lead to the tyres bursting.

▶ Examine the tyres for foreign objects.

▶ Check whether the tyre has a puncture or the valve has a leak.

▶ If you are unable to rectify the damage, contact a qualified specialist workshop.

Information on the recommended tyre pressure for the vehicle's factory-fitted tyres can be found on the tyre pressure table in the fuel filler flap (⟶ page 694).

Use a suitable pressure gauge to check the tyre pressure. The outward appearance of a tyre does not allow any reliable conclusion about the tyre pressure.

ⓘ The difference in pressure between the tyres on an axle must not be more than 10 kPa (0.1 bar/1.5 psi).

Vehicles with a tyre pressure monitoring system: you can also check the tyre pressure via the driver display.

ONLY CORRECT TYRE PRESSURES WHEN THE TYRES ARE COLD. THE TYRES ARE COLD IF THE FOLLOWING CONDITIONS HAVE BEEN MET:

- The vehicle has been parked with the tyres out of direct sunlight for at least three hours.
- The vehicle has travelled less than 1.6 km.

NOTES ON TRAILER OPERATION
The applicable tyre pressure for the tyres of the rear axle is always the tyre pressure recommended in the tyre pressure table for a full load.

Overview of the tyre pressure table

The tyre pressure table is located inside the fuel filler flap.

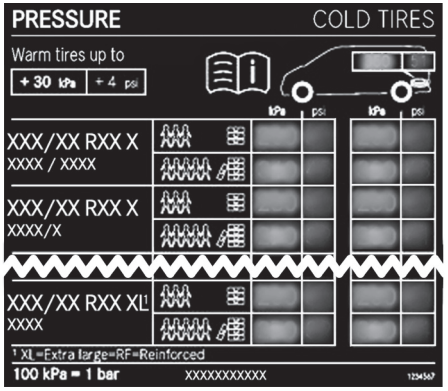

The tyre pressure table shows the recommended tyre pressure for all tyres approved by the factory for this vehicle. The recommended tyre pressures apply for cold tyres under various operating conditions, i.e. load and/or speed of the vehicle.

If one or more tyre sizes precede a tyre pressure, the following tyre pressure information is only valid for those tyre sizes and the respective load condition.

If the preceding tyre sizes are supplemented by the [ⓘ] symbol, the subsequent tyre pressure information shows alternative tyre pressures. These tyre pressures can improve the ride comfort of your vehicle. Fuel consumption may then increase slightly.

The load conditions "partially laden" and "fully laden" are defined in the table by means of different numbers of occupants and amounts of luggage. The actual number of seats may differ.

The tyre pressure values given for partially laden vehicles are minimum values which offer you good ride comfort. They are not valid for trailer operation.

You can also use the tyre pressure values for a fully laden vehicle. These are always allowed and permissible. However, in a partially laden vehicle, the ride is not as comfortable and fuel consumption is only minimally reduced. In addition, wear is greater in the middle of the tyre contact surface.

Set the correct tyre pressure before loading the vehicle. Once the vehicle is laden, check the tyre pressures and correct them if necessary.

Be sure to also observe the following further related subjects:

- Notes on tyre pressure (⟶ page 693)

Tyre pressure monitoring system

FUNCTION OF THE TYRE PRESSURE MONITORING SYSTEM

The system uses a tyre pressure sensor to measure the pressure and temperature of the tyres fitted to the vehicle.

New tyre pressure sensors, e.g. in winter tyres, are automatically taught-in during the first journey.

ⓘ Two tyre types may be permissible, depending on the vehicle version. A distinction is made between XL tyres (Extra Load, e.g. 255/55 R17 **XL**) and C van tyres (e.g. 225/55 R17 **C**). When changing tyre types, the permitted pressure range of the tyre pressure monitoring system must be recoded. Contact a qualified Mercedes-Benz specialist workshop for this purpose.

ⓘ Mercedes-Benz recommends retaining the ex works tyre type when changing the tyres. In this way, you avoid having to recode the control units.

It is the driver's responsibility to set the tyre pressure to the recommended cold tyre pressure suitable for the operating situation (⟶ page 693).

Note that the tyre pressure monitoring system must first learn the correct tyre pressure for the current operating situation. If a substantial loss of pressure occurs, the warning threshold for the warning message is aligned to the learned reference values. Restart the tyre pressure monitoring system after setting the pressure with cold tyres (⟶ page 696). The current pressures are saved as new reference values. This will ensure that a warning message will only appear if the tyre pressure drops significantly.

THE [(!)] WARNING LAMP ON THE DRIVER DISPLAY INDICATES A DETECTED PRESSURE LOSS OR A MALFUNCTION AS FOLLOWS:

- if the [(!)] warning lamp is lit continuously, the tyre pressure on one or more tyres is significantly too low. The tyre pressure monitoring system is not malfunctioning.
- if the [(!)] warning lamp flashes for around a minute and then remains lit continuously, the tyre pressure monitoring system is malfunctioning.
- a message also appears in the driver display.

SYSTEM LIMITS

THE SYSTEM MAY BE IMPAIRED OR INOPERATIVE IN THE FOLLOWING SITUATIONS:

- the tyre pressure has been set incorrectly.
- there is a sudden pressure loss caused, for example, by a foreign object penetrating the tyre.
- there is a malfunction caused by another radio signal source.

CHECKING THE TYRE PRESSURE WITH THE TYRE PRESSURE MONITORING SYSTEM

Requirements

- The vehicle is switched on.

Driver display:

→ Service

ONE OF THE FOLLOWING DISPLAYS APPEARS:

- Current tyre pressure and tyre temperature of the individual wheels

- Tyre pressures will be displayed after a few minutes of driving: The teaching-in process of the system is not yet complete. The tyre pressures are already being monitored.

▶ Compare the tyre pressure with the recommended tyre pressure for the current operating status (⟶ page 694). Additionally, observe the notes on cold tyres (⟶ page 693).

ⓘ The values shown in the driver display may deviate from those of the tyre pressure gauge as they refer to sea level. At high elevations, the tyre pressure values indicated by a pressure gauge are higher than those shown by the driver display. If this is the case, do not reduce the tyre pressures.

ⓘ Also be sure to observe the notes on tyre pressure (⟶ page 693).

RESTARTING THE TYRE PRESSURE MONITORING SYSTEM

Requirements

- The vehicle is switched on.
- The recommended tyre pressure is correctly set for the respective operating status in each of the wheels (⟶ page 693).
- **Restart the tyre pressure monitoring system in the following situations:**
  - If the tyre pressure has changed.
  - If the wheels or tyres have been changed or newly fitted.

Driver display:

→ Service

▶ Select Tyres and confirm with OK.

A message reading Use current tyre pressures as new reference values? will appear on the driver display.

▶ Confirm the message to initiate a restart.

A message reading Tyre pressure monitor restarted will appear on the driver display.

Current warning messages are deleted and yellow (!) warning lamp goes out.

After you have driven for a few minutes, the system checks whether the current tyre pressures are within the specified range. The current tyre pressures are then accepted as reference values and monitored.

REFER ALSO TO THE FOLLOWING RELATED TOPIC:

- Notes on tyre pressure (⟶ page 693)

Changing a wheel

Notes on selecting, fitting and replacing tyres

You can ask for information regarding permitted wheel/tyre combinations at a qualified specialist workshop.

WARNING
Risk of accident due to incorrect wheel and tyre dimensions

If wheels and tyres of the wrong size are fitted, the service brakes or components in the brake system and in the wheel suspension may be damaged.

- Always replace wheels and tyres with those that fulfil the specifications of the original part.

FOR WHEELS, PAY ATTENTION TO THE FOLLOWING:

- Designation
- Type

FOR TYRES, PAY ATTENTION TO THE FOLLOWING:

- Designation
- Manufacturer
- Type

WARNING
Risk of injury through exceeding the specified tyre load-bearing capacity or the permissible speed rating

Exceeding the load-bearing capacity of the tyres can lead to tyre damage and could cause the tyres to explode.

- Therefore, only use tyre types and sizes approved for your vehicle model.
- Observe the tyre load-bearing capacity rating and speed rating required for your vehicle.

NOTE
Vehicle and tyre damage due to tyre types and sizes that have not been approved

For safety reasons, only use tyres, wheels and accessories which have been specially approved by Mercedes-Benz for your vehicle.

These tyres have been specially adapted for use with driving systems and driving safety systems, such as ABS or ESP®.

Otherwise, certain properties, such as handling characteristics, vehicle noise emissions and consumption could be adversely affected. Other wheel sizes may cause the tyres to come into contact with the vehicle body and axle components when under load. This may result in damage to the tyre or the vehicle.

► Only use tyres, wheels and accessories that have been checked and recommended by Mercedes-Benz.

NOTE
Driving safety put at risk by retreaded tyres

Retreaded tyres are not checked or recommended by Mercedes-Benz, as previous damage is not always detected during the retread process.

Driving safety cannot, therefore, be guaranteed.

► Do not use used tyres when their previous usage is unknown.

NOTE
Possible wheel and tyre damage when driving over obstacles

Large wheels have a smaller section width. As the section width decreases, the risk of wheels and tyres being damaged when driving over obstacles increases.

► Avoid obstacles or drive especially carefully.

► Reduce your speed when driving over kerbs, speed bumps, manhole covers and potholes.

► Avoid particularly high kerbs.

Accessories that are not approved for your vehicle by Mercedes-Benz , or are not being used correctly, can impair operating safety.

BEFORE PURCHASING AND USING NON-APPROVED ACCESSORIES, VISIT A QUALIFIED SPECIALIST WORKSHOP AND ENQUIRE ABOUT:

- suitability
- legal stipulations
- factory recommendations

OBSERVE THE FOLLOWING POINTS WHEN SELECTING, FITTING AND REPLACING TYRES:

- Country-specific requirements for tyre approval that define a specific tyre type for your vehicle.

  Furthermore, the use of certain tyre types in certain regions and areas of operation can be highly beneficial.
- Use only tyres and wheels of the same type, design (summer tyres, winter tyres, all-season tyres) and make.

- Only fit wheels of the same size and tread design on one axle (left and right).

  It is only permissible to fit a different wheel size to this in the event of a flat tyre in order to drive to the specialist workshop.
- Only fit tyres of the correct size onto the wheels.
- Do not make any modifications to the brake system, the wheels or the tyres.

  The use of shims or brake dust shields is not permitted and results in the invalidation of the vehicle's general operating permit.
- **Vehicles with a tyre pressure monitoring system:** all fitted wheels must be equipped with functioning sensors for the tyre pressure monitoring system.
- At temperatures below 10 °C, use winter tyres or all-season tyres marked M+S for all wheels.

  Winter tyres bearing the snowflake symbol in addition to the M+S marking provide the best possible grip in wintry road conditions.
- For M+S tyres, only use tyres with the same tread.
- Observe the maximum permissible speed for the M+S tyres fitted.

  If this is below the vehicle's maximum permissible speed, this must be indicated in an appropriate label in the driver's field of vision.
- Run in new tyres at moderate speeds for the first 100 km.
- Replace the tyres after six years at the latest, regardless of wear.

For more information on wheels and tyres, contact a qualified specialist workshop.

ALSO OBSERVE THE FOLLOWING FURTHER RELATED SUBJECTS:

- Notes on tyre pressure (⟶ page 693)
- Tyre pressure table (⟶ page 694)
- Notes on the emergency spare wheel (⟶ page 707)

Notes on changing wheels

WARNING
Risk of injury through different wheel sizes

Interchanging the front and rear wheels can severely impair the driving characteristics.

The disk brakes or wheel suspension components may also be damaged.

▶ Only interchange the front and rear wheels if the wheels and tyres have the same dimensions.

Interchanging the front and rear wheels if the wheels or tyres have different dimensions can render the general operating permit invalid.

On vehicles with the same front and rear wheel size, you can interchange the wheels every 5,000 to 10,000 km depending on the wear. Ensure the direction of rotation is maintained for the wheels.

It is imperative to observe the instructions and safety notes on "Changing a wheel" when doing so.

Wheel size groups

The determined vehicle speed is displayed in the driver display and is important for controlling the driving safety systems and driving systems. The display accuracy of the speedometer and the odometer is legally prescribed. Deter-

mining the speed is dependent on the tyre size or the rolling circumference of the tyres. The rim diameter is always specified in inches.

For this reason, the vehicle control units can be coded for the following wheel size categories:

WHEEL SIZE CATEGORIES

Wheel size group 1	Wheel size group 2
195/65 R 16 C	225/55 R 17 XL
205/65 R 16 C	235/55 R 17 XL
225/60 R 16 C	245/55 R 17 XL
225/55 R 17 C	245/45 R 18 XL
225/55 R 17 XL	245/50 R 18 XL
245/45 R 18 XL	245/45 R 19 XL

ⓘ When changing a tyre, Mercedes-Benz recommends that you stay within a wheel size group and keep the same tyre type. This avoids recoding the control units and maintains the optimum function of the tyre pressure monitoring system. Further information on tyre types: (⟶ page 695)

DUE TO THE LEGALLY PRESCRIBED ACCURACY OF THE SPEEDOMETER AND ODOMETER DISPLAYS, THE FOLLOWING TYRES ARE NOT PERMITTED FOR TAXIS AND HIRE CARS:

- Wheel size group 1
  - 195/65 R16C
- Wheel size group 2
  - 225/55 R17XL
  - 245/45 R18XL

If the wheel size group changes, you must have your vehicle's control units recoded at a qualified specialist workshop.

Information on the direction of tyre rotation

Tyres with a specified direction of rotation have additional benefits, e.g. if there is a risk of aquaplaning. You will only gain these benefits if the correct direction of rotation is observed.

An arrow on the sidewall of the tyre indicates its correct direction of rotation.

You may also fit a spare wheel against the direction of rotation. Observe the time restriction on use as well as the speed restriction specified on the spare wheel.

Information on storing wheels

OBSERVE THE FOLLOWING WHEN STORING WHEELS:

- Wheels that have been removed should be stored in a cool, dry and, if possible, dark place.
- Protect the tyres from oil, grease and fuel.

Preparing the vehicle for a wheel change

Requirements:

- The wheel-change tool kit is available.

- There is a spare wheel available.
- The vehicle is not on a slope.
- The vehicle is on solid, non-slippery and level ground.

▶ Apply the parking brake.

▶ Move the front wheels to the straight-ahead position.

▶ **Vehicles with manual transmission:** engage first or reverse gear R.

▶ **Vehicles with automatic transmission:** shift to transmission position P.

▶ Switch off the vehicle.

▶ Make sure that the vehicle cannot be switched on.

▶ **On level terrain:** place chocks or other suitable objects under the front and rear of the wheel that is diagonally opposite the wheel to be changed.

▶ **On slight inclines:** place chocks or other suitable objects under the wheels of the front and rear axles on the opposite side to the wheel to be changed.

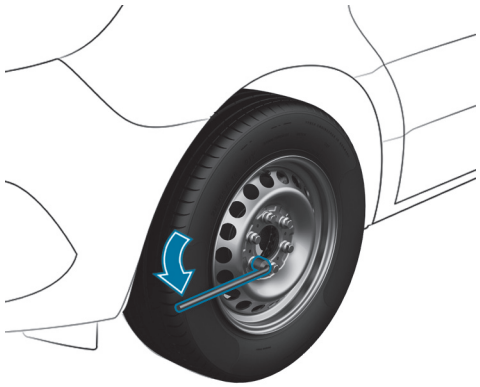

▶ If included in the vehicle equipment, take the tyre-change tool kit out of the vehicle tool kit (⟶ page 683).

▶ If included in the vehicle equipment, remove the spare wheel from the spare wheel holder (⟶ page 708).

▶ If necessary, remove the wheel trim.

▶ Using the wheel spanner, loosen the wheel bolts on the wheel you wish to change by about one full turn. Do not unscrew the wheel bolts.

▶ Raise the vehicle (⟶ page 702).

Raising the vehicle when changing a wheel

WARNING
Risk of injury from incorrect positioning of the jack

If you do not position the jack correctly at the appropriate jacking point of the vehicle, the jack could tip with the vehicle raised.

► Only position the jack at the appropriate jacking point of the vehicle. The base of the jack must be positioned vertically under the jacking point of the vehicle.

WARNING
Risk of injury from vehicle tipping

On slopes, the jack could tip with the vehicle raised.

► Never change a wheel on a slope.

► Consult a qualified specialist workshop.

NOTE
Damage to the vehicle due to the jack

If the jack has not been positioned at the prescribed jack support points, the vehicle may suffer damage.

► Only position the jack at the jack support points provided for this purpose.

Requirements

- There is nobody in the vehicle.
- The vehicle has been prepared for a wheel change (→ page 700).

IMPORTANT NOTES ON USING THE JACK:

- Only use the vehicle-specific jack that has been tested and approved by Mercedes-Benz to raise the vehicle. If the jack is used incorrectly, it could tip over while the vehicle is raised.
- The jack is designed only to raise the vehicle for a short time while a wheel is being changed and is not suitable for carrying out maintenance work under the vehicle.
- Avoid changing a wheel on uphill or downhill slopes.
- The jack must be placed on a firm, flat and non-slip surface. If necessary, use a large, flat, load-bearing and non-slip underlay.
- The foot of the jack must be positioned vertically under the jack support point.

SAFETY INSTRUCTIONS WHILE THE VEHICLE IS RAISED:

- Do not put your hands or feet under the vehicle.
- Do not lie underneath the vehicle.
- Do not start the vehicle and do not release the parking brake.
- Do not open or close any doors.

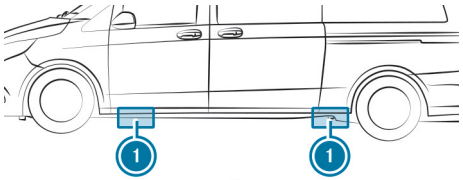

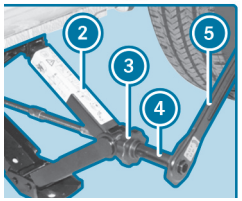

Jack support points ① (rubber stoppers) are located behind the front wheel arches and in front of the rear wheel arches.

- ► Place jack ② beneath corresponding jack support point ①.
- ► Turn handwheel ③ until plate of jack ② sits securely on jack support point ①.
- ► Ensure that the base of jack ② is positioned vertically under jack support point ①.
- ► Assemble adapter ④ and ratchet ⑤ from the vehicle tool kit.
- ► Place adapter ④ and ratchet ⑤ on the hexagon nut of jack ② so that the lettering AUF/UP is visible.
- ► Turn ratchet wrench ⑤ in the AUF/UP direction until the tyre is raised a maximum of 3 cm off the ground.

  When doing so, the jack ② may move to one of the side support surfaces. This is not a problem as long as the notes on use of the jack have been observed.
- ► Remove the wheel (⟶ page 703).

Removing a wheel

Requirements

- The vehicle is raised (⟶ page 702).

When changing a wheel, avoid applying any force to the brake discs since this could impair the level of comfort when braking.

> **NOTE**
> Damage to threading from dirt on wheel bolts
> ► Do not place wheel bolts in sand or on a dirty surface.

- ► Unscrew the wheel bolts.
- ► Remove the wheel.
- ► Install the new wheel (⟶ page 703).

Fitting a new wheel

Requirements:

- The wheel has been removed (⟶ page 703).

WARNING
Risk of accident from losing a wheel

Oiled or greased wheel bolts can cause the wheel bolts to come loose, as too can damaged wheel bolts or wheel hub threads.

- Never oil or grease the threads.
- In the event of damage to the threads, contact a qualified specialist workshop immediately.
- Have the damaged wheel bolts or damaged hub threads replaced.
- Do not continue driving.

WARNING
Risk of injury from tightening wheel bolts and nuts

If you tighten the wheel bolts or wheel nuts when the vehicle is raised, the jack could tip.

- Only tighten wheel bolts or wheel nuts when the vehicle is on the ground.

- Observe the instructions and safety notes on wheel-changing and the notes on tyre selection (→ page 697).
- For safety reasons, only use wheel bolts which have been approved by Mercedes-Benz and for the wheel in question.
- Clean the wheel and wheel hub contact surfaces.
- Slide the wheel which is to be fitted onto the wheel hub and push it on.
- Screw in the wheel bolts until they are hand-tight.
- Lower the vehicle and tighten the wheel bolts to the prescribed torque (→ page 704).

Lowering the vehicle after a wheel change

WARNING
Risk of accident due to incorrect tightening torque

The wheels could come loose if the wheel bolts or wheel nuts are not tightened to the prescribed torque.

- Ensure that the wheel bolts or wheel nuts are tightened to the prescribed tightening torque.
- If you are not sure, do not move the vehicle. Contact a qualified specialist workshop and have the tightening torque checked immediately.

Requirements

- The new wheel has been fitted (→ page 703).

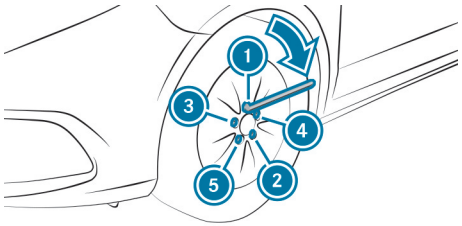

- Place the adapter and the ratchet on the hexagon head nut of the jack such that the lettering AB/DOWN is visible.
- **To lower the vehicle:** turn the ratchet of the jack anti-clockwise.
- **Steel wheels:** tighten the wheel bolts evenly in a crosswise pattern in the sequence indicated (1 to 5) and to 200 Nm.
- **Light-alloy wheels:** tighten the wheel bolts evenly in a crosswise pattern in the sequence indicated (1 to 5) and to 180 Nm.
- Check the tyre pressure of the newly fitted wheel and adjust it if necessary.

Vehicles with a tyre pressure monitoring system: all fitted wheels must be equipped with functioning sensors.

- Retighten the wheel bolts to the specified tightening torque after the vehicle has been driven 50 km.

ⓘ When using a wheel or spare wheel with a new or newly painted disk wheel, have the wheel bolts retightened again after approximately 1,000 to 5,000 km. Observe the specified tightening torque.

Information on wheel and tyre combinations

GENERAL NOTES
Information on tyres, wheels and permissible combinations can be obtained at a qualified specialist workshop.

The smaller the tyre section for a specific wheel size, the worse the driving comfort on poor roads. Ride and damping comfort are reduced and the risk of damage to wheels and tyres when you drive over obstacles increases.

If you change wheel size on your vehicle, ensure that it is assigned to the correct wheel size group (⟶ page 699). If the assignment changes without recoding the control units in the vehicle, the speedometer will not display the speed accurately. Driving safety systems and driving systems may then be operationally impaired or may detect a malfunction and switch themselves off.

You will find a table with the recommended tyre pressures for various vehicle loads on the inside of the vehicle's fuel filler flap.

Check tyre pressures regularly and only when the tyres are cold.

OBSERVE THE FOLLOWING NOTES:

- always fit the vehicle with tyres of the same size on a given axle (left/right)
- always fit the same type of wheels on your vehicle at a given time (summer tyres, winter tyres)

You can obtain information about tyres that have been specially designed and approved for your vehicle from a Mercedes-Benz service centre.

ⓘ Not all wheel/tyre combinations can be fitted at the factory for all countries.

Spare wheel

Notes on the emergency spare wheel and spare wheel

Emergency spare wheel: wheel and/or tyre dimensions as well as the type of tyre are different from the wheel to be replaced.

ⓘ A label with the speed limitation can be found on the emergency spare wheel.

Spare wheel: wheel and tyre dimensions as well as the type of tyre correspond to the other fitted wheels.

A fitted emergency spare wheel or spare wheel changes the driving characteristics and bears risks.

⚠ **WARNING**
Risk of accident due to incorrect wheel and tyre dimensions

Mounting an emergency spare wheel or spare wheel may severely impair the driving characteristics.

There is an increased risk of an accident.

To prevent hazardous situations:

- Check the tyre pressure of the spare wheel or emergency spare wheel once fitted and, if necessary, adjust.
- The emergency spare wheel may only be used temporarily and must be replaced with a standard wheel as soon as possible.
- Never fit more than one emergency spare wheel.
- Adapt your driving style and drive carefully in emergency spare wheel mode.
- Do not switch off ESP®.
- Do not use snow chains on the emergency spare wheel.
- Replace the emergency spare wheel after six years at the latest, regardless of wear.

- When using an emergency spare wheel or spare wheel (different from the wheel to be replaced), you must not exceed a permissible top speed of 80 km/h.
- Have the emergency spare wheel or spare wheel replaced by a qualified specialist workshop (⟶ page 697).
- The tyre pressure of the emergency spare wheel or spare wheel must be checked before starting a journey and, if necessary, adjusted (⟶ page 694).

THE FOLLOWING SHOULD BE CHECKED REGULARLY, PARTICULARLY PRIOR TO LONG JOURNEYS:

- that the emergency spare wheel or spare wheel is firmly secured
- the tyre pressure of the emergency spare wheel or spare wheel (adjust the tyre pressure if necessary) (⟶ page 694)
- the fastenings of the emergency spare wheel holder or spare wheel holder

The spare wheel is located in a spare wheel holder under the rear of the vehicle.

Replace the tyres after six years at the latest, regardless of wear. This also applies to the spare wheel.

ⓘ If you have fitted an emergency spare wheel or a spare wheel, the tyre pressure monitoring system will not function for this wheel. The emergency spare wheel or spare wheel is not equipped with a sensor for the tyre pressure monitoring system.

Fitting and removing the spare wheel

REMOVING THE SPARE WHEEL UNDER THE REAR OF THE VEHICLE

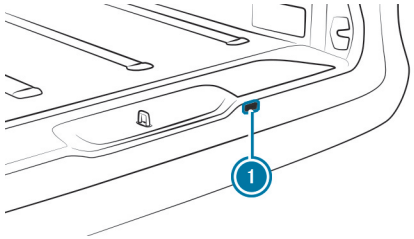

▶ Take the wheel wrench and the auxiliary tool for the spare wheel winch out of the vehicle tool kit (⟶ page 683).

▶ Carefully prise off cover cap ① with a suitable tool, e.g. a screwdriver. Be careful not to damage the paintwork or the cover cap when doing so.

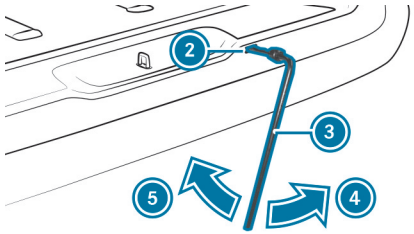

▶ Push auxiliary tool ② through the opening into the spare wheel winch guide.

▶ Attach wheel wrench ③ to auxiliary tool ② for the spare wheel winch.

▶ Turn wheel wrench ③ in the direction of arrow ⑤ until you feel resistance or until the friction clutch of the spare wheel winch overwinds.
The spare wheel is lowered.

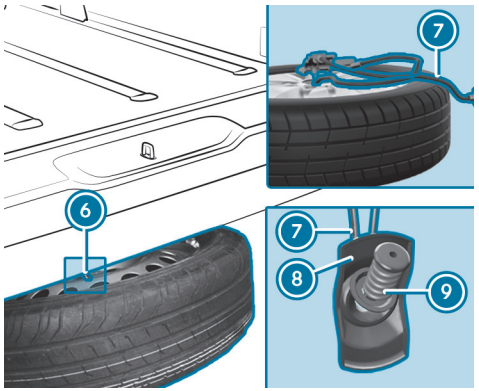

- Pull the spare wheel out from under the vehicle. Watch out for the check cable 7.
- Press cable 6 downwards and hold spring 9 at an angle against wheel gripper 8.
  Wheel gripper 8 is released.
- Pull wheel gripper 8 out of the wheel dish.

FITTING THE SPARE WHEEL UNDER THE REAR OF THE VEHICLE

ⓘ Light-alloy wheels cannot be transported under the vehicle. In this case, transport the light-alloy wheel in the load compartment, and only wind up cable 6.

- Take wheel wrench 3 and auxiliary tool 2 for the spare wheel lifter out of the vehicle tool kit (→ page 683).
- Place the wheel on the ground with the wheel dish facing up.
- Guide wheel gripper 8 at an angle on cable 6 from above into the wheel dish.
- Slide the wheel slightly under the vehicle.
- Attach wheel wrench 3 to auxiliary tool 2 for the spare wheel lifter.
- Turn wheel wrench 3 in the direction of arrow 4 until you feel resistance and the friction clutch of the spare wheel winch overwinds in jerks.
  The wheel is firmly secured to the underside of the vehicle.
- Pull wheel wrench 3 and auxiliary tool 2 for the spare wheel lifter out of the opening for the spare wheel winch.
- Close the spare wheel winch opening with cover cap 1.
- Stow wheel wrench 3 and auxiliary tool 2 for the spare wheel lifter in the vehicle tool kit.

Technical data

This interactive PDF works like a website – tap or click a button to jump straight to where you want to go.
You can return here at any time via the navigation bar at the top left.

Information on the technical data
On-board electronics
Radio regulations
Vehicle identification plate, vehicle identification number (VIN) and engine number
Operating fluids and capacities
Vehicle data
Trailer hitch
Lashing points and carrier systems

Information on the technical data

The technical data was determined in accordance with EU Directives. The specified data only applies to vehicles with standard equipment. You can obtain further information at a qualified specialist workshop.

Only for certain countries: you can find vehicle-specific vehicle data in the COC documents (CERTIFICATE OF CONFORMITY). These documents are supplied upon delivery of the vehicle.

On-board electronics

Notes on work on the engine electronics

NOTE
Premature wear through improper maintenance

Improper maintenance may cause vehicle components to wear more quickly and the vehicle's operating permit may be invalidated.

► Always have work on the engine electronics and related components carried out at a qualified specialist workshop.

Two-way radios

INSTALLATION NOTES FOR TWO-WAY RADIOS

WARNING
Risk of accident due to improper work on two-way radios

If two-way radios are manipulated or retrofitted incorrectly, the electromagnetic radiation from the two-way radios can interfere with the vehicle electronics and jeopardise the operating safety of the vehicle.

► You should have all work on electrical and electronic components carried out at a qualified specialist workshop.

WARNING
Risk of accident due to improper operation of two-way radios

If you use two-way radios in the vehicle improperly, their electromagnetic radiation can disrupt the vehicle's electronics. This is the case in the following situations, in particular:

- The two-way radio is not connected to an exterior aerial.
- The exterior aerial is fitted incorrectly or is not a low-reflection aerial.

This could jeopardise the operating safety of the vehicle.

► Have the low-reflection exterior aerial fitted at a qualified specialist workshop.

► When operating two-way radios in the vehicle, always connect them to the low-reflection exterior aerial.

NOTE
Invalidation of the operating permit due to failure to comply with the instructions for installation and use

The operating permit may be invalidated if the instructions for installation and use of two-way radios are not observed.

- Only use approved frequency bands.
- Observe the maximum permissible output power in these frequency bands.
- Only use approved aerial positions.

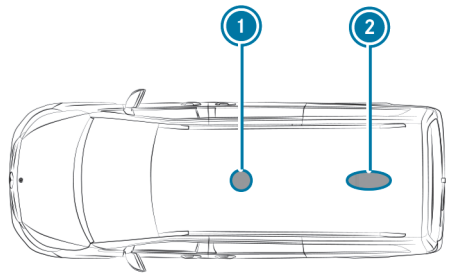

1. Front roof area
2. Rear roof area

Fitting a roof aerial to vehicles with a panoramic sliding sunroof is not permitted.

Use Technical Specification ISO/TS 21609 (Road Vehicles - EMC guidelines for installation of aftermarket radio frequency transmitting equipment) when retrofitting two-way radios. Comply with the legal requirements for detachable parts.

If your vehicle has pre-installation for two-way radio equipment, use the power supply or aerial connections intended for use with the pre-installation. Observe the manufacturer's supplements during installation.

TRANSMISSION OUTPUT OF TWO-WAY RADIOS

The maximum transmission outputs (PEAK) at the base of the aerial must not exceed the values in the following table:

FREQUENCY BAND AND MAXIMUM TRANSMISSION OUTPUT

Frequency band	Maximum transmission output
2 -m- frequency band 144 – 174 MHz	50 W
4-m-frequency band 74 – 88 MHz	30 W
Terrestrial Trunked Radio (TETRA) 380 – 460 MHz	10 W
Mobile telephony 2G	2 W
Mobile telephony 3G/4G/5G	0.5 W

THERE ARE NO RESTRICTIONS ON USE OF THE FOLLOWING DEVICES IN THE VEHICLE:

- Two-way radios with a maximum transmission output of up to 100 mW
- Two-way radios with transmitter frequencies in the 380 - 410 MHz frequency band and a maximum transmission output of up to 2 W (trunked radio system/Tetra)

- Mobile phones (2G/3G/4G/5G)

THERE ARE NO RESTRICTIONS ON POSITIONING THE AERIAL ON THE OUTSIDE OF THE VEHICLE FOR THE FOLLOWING FREQUENCY BANDS:

- Terrestrial Trunked Radio (TETRA)
- 2G/3G/4G/5G

Radio regulations

Specific information on wireless applications in accordance with 2014/53/EU

TYPE OF WIRELESS APPLICATION AND SPECIFICATION IN ACCORDANCE WITH 2014/53/EU

Besides the typical frequencies for mobile communication cars by Mercedes-Benz make use of the following automotive radio applications.

TYPE OF WIRELESS APPLICATION AND SPECIFICATION IN ACCORDANCE WITH 2014/53/EU

Technology	Frequency range	Transmission output/magnetic field strength
Remote Keyless Entry	20 kHz (9–90 kHz)	≤ 72 dBµA/m at 10m
Wireless Power Transmission	105 kHz (90–119 kHz)	≤ 42 dBµA/m at 10m
Remote Keyless Entry	120 kHz (119–135 kHz)	≤ 42 dBµA/m at 10m
Wireless Power Transmission	127 kHz (119–135 kHz)	≤ 66 dBµA/m at 10m with the magnetic field strength level decreasing 3dB/octave above 119 kHz
Near-field communication	13.553–13.567 MHz	≤ 42 dBµA/m at 10m
Remote Keyless Entry, Garage Door Opener, Tire Pressure Monitoring	433 MHz (433.05–434.79 MHz)	≤ 10 mW ERP
Block Heater Remote Control, Garage Door Opener	868 MHz (868.0–868.6 MHz)	≤ 25 mW ERP
Block Heater Remote Control, Garage Door Opener	869 MHz (868.7–869.2 MHz)	≤ 25 mW ERP
Bluetooth, Kleer, RLAN, wireless Headphones	2.4 GHz ISM band (2400–2483.5 MHz)	≤ 100 mW EIRP

Technology	Frequency range	Transmission output/magnetic field strength
RLAN	5.1 GHz UNII-1 (5150–5250 MHz)	≤ 25 mW EIRP
Interior Monitoring Radar, RLAN	5.8 GHz UNII-3 (5725–5875 MHz)	≤ 25 mW EIRP
Remote Keyless Entry	7.25 GHz UWB (6.0–8.5 GHz)	≤ -41.3 dBm/MHz EIRP mean ≤ 0 dBm/MHz EIRP peak
76 GHz radar	76–77 GHz	≤ 55 dBm peak EIRP
Hermes (communication module)	GSM: EGSM900, Class 4 GSM: EGSM1800, Class 1 GSM: EGSM900 8-PSK, Class E2 GSM: EGSM1800 8-PSK, Class E2	< +33 dBm (±2 dB) < +30 dBm (±2 dB < +27 dBm (±3 dB) < +26 dBm (±3 dB/-4 dB)
	UMTS 2100: WCDMA FDD B 1, Class 3	< +24 dBm (±1 dB/-3 dB)
	LTE: FDD BI/BIII, Class 3 LTE: TDD B38/B39/B40/B41, Class 3	< +23 dBm (±2 dB)
Onboard Logic Unit (OLU)	GSM 900 (880–915 MHz / 925–960 MHz)	33 dBm (2 W)
	GSM 1800 (1710–1785 MHz / 1805–1880 MHz)	30 dBm (1 W)
	WCDMA FDDI (1920–1980 MHz / 2110–2170 MHz)	24 dBm (0.25 W)
	WCDMA FDDVIII (880–915 MHz / 925–960 MHz)	24 dBm (0.25 W)
	LTE FDD1 (1920–1980 MHz / 2110–2170 MHz)	23 dBm (0.2 W)
	LTE FDD3 (1710–1785 MHz / 1805–1880 MHz)	23 dBm (0.2 W)
	LTE FDD7 (2500–2570 MHz / 2620–2690 MHz)	23 dBm (0.2 W)
	LTE FDD8 (880–915 MHz / 925–960 MHz)	23 dBm (0.2 W)
	LTE FDD20 (832–862 MHz / 791–821 MHz)	23 dBm (0.2 W)
	LTE TDD38 (2570–2620 MHz / 2570–2620 MHz)	23 dBm (0.2 W)

Further information and updates are available at the following web address:

https://regulatoryradioinformation.corpinter.net/vans/vans/en

Regulatory radio identifiers and specific information

The tables and sections contain the following regulatory radio information:

- Manufacturer information
- Required regulatory radio identifiers, listed by country/region:
  - Manufacturer's specifications
  - Model designations
  - Radio equipment approval numbers
- Specific information on wireless vehicle components

Further information and updates are available at the following web address:

https://regulatoryradioinformation.corpinter.net/vans/vans/en

MANUFACTURER OVERVIEW

Manufacturer	Manufacturer information
Continental ADC	Continental - ADC Automotive Distance Control Systems GmbH, Peter-Dornier-Straße 10, 88131 Lindau, Germany
Bosch	Robert Bosch GmbH, Daimlerstraße 6, 71229 Leonberg, Germany
Continental Automotive	Continental Automotive GmbH, Siemensstraße 12, 93055 Regensburg, Germany
Continental Automotive Technologies	Continental Automotive Technologies GmbH, VDO-Straße 1, 64832 Babenhausen, Germany
Garmin	Garmin International, Inc., 1200 E. 151st Street, Olathe, Kansas 66062, United States
Harman Becker	Harman Becker Automotive Systems GmbH, Becker-Goehring-Straße 18, 76307 Karlsbad, Germany
HELLA	HELLA KGaA Hueck & Co., Rixbecker Straße 75, 59552 Lippstadt, Germany
Hirschmann	Hirschmann Car Communication GmbH, Stuttgarter Straße 45-51, 72654 Neckartenzlingen, Germany
Huf Baolong	Huf Baolong Electronics Bretten GmbH, Gewerbestraße 40, 75015 Bretten, Germany
MARQUARDT	MARQUARDT GmbH, Schloßstraße 16, 78604 Rietheim-Weilheim, Germany
Meta System	Meta System S.P.A., Via T. Galimberti 5, 42124 Reggio Emilia, Italy
Molex Technologies	Molex Technologies GmbH, Mizarstraße 3, 12529 Schönefeld, Germany

Manufacturer	Manufacturer information
Schrader	Schrader Electronics Ltd., 11 Technology Park, Belfast Road, Antrim BT41 1QS, Northern Ireland, United Kingdom
Veoneer	Veoneer Sweden AB, Wallentinsvägen 22, 44737 Vårgårda, Sweden
Visteon	Visteon Electronics GmbH, Amalienbadstraße 41a, 76227 Karlsruhe, Germany
Vitesco	Vitesco Technologies GmbH, Siemensstrasse 12, 93055 Regensburg Germany
WITTE-Velbert	WITTE-Velbert GmbH & Co. KG, Hoeferstr. 3-15, 42551 Velbert, Germany

ALGERIA

Agréé par l'ANF
Référence du Certificat de conformité

Homologué par l'ARPCE
Référence du Certificat de conformité

REGULATORY RADIO IDENTIFIERS

Manufacturer	Model designation	Radio equipment approval number
Continental Automotive	MARS Keyless (locking system)	168/H/ANF/2024
HELLA	DM4 (locking system)	123/H/ANF/2021
Hirschmann	920510A (locking system)	4001/1.69-DA/3005/DT/DG/ARPT/17
Huf Baolong	TSSRE4A (tyre pressure sensor)	198/H/ANF/2021
Huf Baolong	TSSSG4G6b (tyre pressure monitoring system control unit)	67/H/ANF/2021
MARQUARDT	DC12B (locking system)	189/H/ANF/2021

ARGENTINA

REGULATORY RADIO IDENTIFIERS

R		
Manufacturer	**Model designation**	**Radio equipment approval number**
Continental ADC	SRR6-A (control unit)	H-30005
Continental Automotive	MARS Keyless (locking system)	H-17929
Continental Automotive Technologies	NTG7Q MID LF2 (head unit)	C-29127
Continental Automotive Technologies	NTG7Q HIGH LF2 (head unit)	C-29126

Manufacturer	Model designation	Radio equipment approval number
Continental Automotive Technologies	NTG7Q PREMIUM LF2 (head unit)	C-29128
Continental Automotive Technologies	NTG7Q PREMIUMPLUS LF2 (head unit)	C-29930
HUF	HUF13482 (locking system)	H-31125
Huf Baolong	TSSRE4A (tyre pressure sensor)	H-20027
Hirschmann	920510A (locking system)	H-21033
MARQUARDT	DC12B (locking system)	H-21034
MARQUARDT	MS2 (locking system)	H-17598
Schrader	HSW4T (tyre pressure sensor)	H-12336
Vitesco	HFA30 (radar sensor)	H-30148

AUSTRALIA

REGULATORY RADIO IDENTIFIERS

Manufacturer	Model designation
Continental ADC	SRR6-A (control unit)
Bosch	MRR1Rear (radar sensor)
Bosch	MRRe14FCR (radar sensor)
Bosch	FR5CPCCF (radar sensor)
Bosch	F5CP12 (radar sensor)
Continental Automotive	MARS Keyless (locking system)
Continental Automotive Technologies	NTG7Q MID LF2 (head unit)
Continental Automotive Technologies	NTG7Q HIGH LF2 (head unit)
Continental Automotive Technologies	NTG7Q PREMIUM LF2 (head unit)
HUF	HUF13145 (locking system)
Huf Baolong	TSSRE4Uf (tyre pressure sensor)
Huf Baolong	TSSSG4G6b (tyre pressure monitoring system control unit)

BAHAMAS

REGULATORY RADIO IDENTIFIERS

Manufacturer	Model designation	Radio equipment approval number
Bosch	MRR1Rear (radar sensor)	URCA_TA/2017_184
Bosch	MRRe14FCR (radar sensor)	URCA_TA/2017_157
Bosch	FR5CPCCF (radar sensor)	URCA_TA_2019_195
Bosch	F5CP12 (radar sensor)	URCA_TA_2022_077
Continental Automotive	MARS Keyless (locking system)	URCA_TA/2017_119

Manufacturer	Model designation	Radio equipment approval number
HELLA	DM4 (locking system)	URCA_TA/2017_078
Hirschmann	920510A (locking system)	URCA_TA/2019_019
Huf Baolong	TSSRE4A (tyre pressure sensor)	URCA_TA/2017_094
MARQUARDT	DC12B (locking system)	URCA_TA_2019_128
MARQUARDT	MS2 (locking system)	URCA_TA/2017_021
Vitesco	HFA30 (radar sensor)	URCA_TA_2023_247

BELARUS

REGULATORY RADIO IDENTIFIERS

Manufacturer	Model designation
Bosch	MRR1Rear (radar sensor)
Bosch	MRRe14FCR (radar sensor)
Bosch	FR5CPCCF (radar sensor)
Bosch	F5CP12 (radar sensor)
Continental Automotive	MARS Keyless (locking system)
HELLA	DM4 (locking system)
Huf Baolong	TSSRE4A (tyre pressure sensor)
Huf Baolong	TSSRE4Uf (tyre pressure sensor)
Huf Baolong	TSSSG4G6b (tyre pressure monitoring system control unit)
MARQUARDT	DC12B (locking system)
MARQUARDT	MS2 (locking system)

BOTSWANA

REGULATORY RADIO IDENTIFIERS

Manufacturer	Model designation	Radio equipment approval number
Bosch	MRRe14FCR (radar sensor)	BOCRA/TA/2019/4674
Bosch	FR5CPCCF (radar sensor)	BOCRA/TA/2019/4975
Bosch	MRR1Rear (radar sensor)	BOCRA/TA/2017/3788
Bosch	F5CP12 (radar sensor)	BOCRA/TA/2022/7110
Continental Automotive	MARS Keyless (locking system)	BOCRA/TA/2019/4661
HELLA	DM4 (locking system)	BOCRA/TA/2019/4662
Huf Baolong	TSSRE4Uf (tyre pressure sensor)	BOCRA/TA/2019/5079
MARQUARDT	DC12B (locking system)	BOCRA/TA/2019/4388
MARQUARDT	MS2 (locking system)	BOCRA/TA/2019/5135

BRAZIL

Note on the two-way radio systems in the vehicle:

These systems are not protected against harmful interference and must not cause interference in properly approved systems.

REGULATORY RADIO IDENTIFIERS

Manufacturer	Model designation	Radio equipment approval number
Continental ADC	SRR6-A (control unit)	00512-24-02496
Continental Automotive	MARS Keyless (locking system)	03189-17-02856
Continental Automotive Technologies	NTG7Q MID LF2 (head unit)	12520-23-06353
Continental Automotive Technologies	NTG7Q HIGH LF2 (head unit)	12525-23-06353
Continental Automotive Technologies	NTG7Q PREMIUM LF2 (head unit)	12522-23-06353
Continental Automotive Technologies	NTG7Q PREMIUMPLUS LF2 (head unit)	17830-23-06353
HELLA	DM4 (locking system)	04689-17-05364
Hirschmann	920510A (locking system)	20595-22-08058
HUF	HUF13482 (locking system)	07889-24-06643
Huf Baolong	TSSRE4A (tyre pressure sensor)	05181-17-06643
Huf Baolong	TSSRE4Uf (tyre pressure sensor)	07137-19-08137
MARQUARDT	DC12B (locking system)	01395-11-02930
MARQUARDT	MS2 (locking system)	00616-17-02930
Molex Technologies	HUB-8 (charger for mobile phones)	19286-23-12116
Vitesco	HFA30 (radar sensor)	18924-23-15869

Other specific information

Charging unit for the wireless charging of mobile devices (WMI):

This device works in secondary mode, which means that it has no protection against harmful interference, not even from stations of the same type, and must not cause any interference with systems that work in primary mode.

This product is approved in accordance with the procedures specified in Directive 242/2000 by the Brazilian National Telecommunications Agency ANATEL and meets the valid technical requirements.

Further information is available on the ANATEL website. www.anatel.gov.br

BRUNEI DARUSSALAM

REGULATORY RADIO IDENTIFIERS

Manufacturer	Model designation	Radio equipment approval number
Bosch	FR5CPCCF (radar sensor)	DTA-004222
Bosch	LRR3 (radar sensor)	DTA-011039

Manufacturer	Model designation	Radio equipment approval number
Bosch	MRR1Rear (radar sensor)	DTA-006601
Bosch	MRRe14FCR (radar sensor)	DTA-006678
Bosch	F5CP12 (radar sensor)	DTA-018042
Continental Automotive	MARS Keyless (locking system)	DTA-017264
HELLA	DM4 (locking system)	DTA-020187
Hirschmann	920510A (locking system)	DTA-000718
Huf Baolong	TSSRE4A (tyre pressure sensor)	DTA-000310
Huf Baolong	TSSRE4Uf (tyre pressure sensor)	DTA-021806
Huf Baolong	TSSSG4G6b (tyre pressure monitoring system control unit)	DTA-003757
MARQUARDT	DC12B (locking system)	DTA-000068
MARQUARDT	MS2 (locking system)	LPD-38890
Vitesco	HFA30 (radar sensor)	DTA-030296

EURASIAN ECONOMIC UNION

REGULATORY RADIO IDENTIFIERS

Manufacturer	Model designation
Continental ADC	SRR6-A (control unit)
Bosch	FR5CPCCF (radar sensor)
Bosch	LRR3 (radar sensor)
Bosch	MRR1Rear (radar sensor)
Bosch	MRRe14FCR (radar sensor)
Bosch	F5CP12 (radar sensor)
Continental Automotive	MARS Keyless (locking system)
HELLA	DM4 (locking system)
Hirschmann	920510A (locking system)
HUF	HUF13482 (locking system)
Huf Baolong	TSSRE4A (tyre pressure sensor)
Huf Baolong	TSSRE4Uf (tyre pressure sensor)
Huf Baolong	TSSSG4G6b (tyre pressure monitoring system control unit)
MARQUARDT	DC12B (locking system)
MARQUARDT	MS2 (locking system)

GHANA

REGULATORY RADIO IDENTIFIERS

Manufacturer	Model designation	Radio equipment approval number
		NCA APPROVED
Continental ADC	SRR6-A (control unit)	M1-7E8-X3F-SRH
Bosch	FR5CPCCF (radar sensor)	ZRO-M8-7E3-230
Bosch	F5CP12 (radar sensor)	7E6-M1-X9B-SRD
Continental Automotive	MARS Keyless (locking system)	BR3-1M-GE2-16A
Continental Automotive Technologies	NTG7Q MID LF2 (head unit)	7M-7E7-X09-DSR
Continental Automotive Technologies	NTG7Q HIGH LF2 (head unit)	7M-7E7-X05-DSR
Continental Automotive Technologies	NTG7Q PREMIUM LF2 (head unit)	7M-7E7-X03-DSR
HELLA	DM4 (locking system)	BR3-1M-GE2-157
Hirschmann	920510A (locking system)	M1-7E8-X6ASRH
Huf Baolong	TSSRE4A (tyre pressure sensor)	SR0-1M-7E4-24B
Huf Baolong	TSSRE4Uf (tyre pressure sensor)	7E5-7M-XCB-RDR
MARQUARDT	DC12B (locking system)	ZRO-M8-7E3-X51
MARQUARDT	MS2 (locking system)	BR3-1M-GE-129
Vitesco	HFA30 (radar sensor)	7M-7E7-134-DSR

INDONESIA

⚠ Dilarang melakukan perubahan spesifikasi yang dapat menimbulkan gangguan fisik dan/atau elektromagnetik terhadap lingkungan sekitarnya

REGULATORY RADIO IDENTIFIERS

Manufacturer	Model designation	Radio equipment approval number
Continental ADC	SRR6-A (control unit)	98748/SDPPI/2024 7163
Continental ADC	ARS3-A (radar sensor)	97128/SDPPI/2024 7163
Continental ADC	ARS3-B (radar sensor)	97129/SDPPI/2024 7163
Continental ADC	ARS4-B (radar sensor)	97127/ SDPPI/ 2024 7163
Bosch	LRR3 (radar sensor)	74264/SDPPI/2021 7163
Bosch	MRR1Rear (radar sensor)	74267/SDPPI/2021 7163
Bosch	MRRevo14F (radar sensor)	74265/SDPPI/2021 7163

Manufacturer	Model designation	Radio equipment approval number
Bosch	MRRe14FCR (radar sensor)	74266/SDPPI/2021 7163
Bosch	FR5CPCCF (radar sensor)	67882/SDPPI/2020 7163
Bosch	F5CP12 (radar sensor)	86858/SDPPI/2022 84754
Continental Automotive	MARS Keyless (locking system)	69379/SDPPI/2020 7163
Continental Automotive Technologies	NTG7Q MID LF2 (head unit)	88477/SDPPI/2023 7163
Continental Automotive Technologies	NTG7Q HIGH LF2 (head unit)	88579/SDPPI/2023 7163
Continental Automotive Technologies	NTG7Q PREMIUM LF2 (head unit)	88478/SDPPI/2023 7163
Garmin	VIS (head unit)	69984/SDPPI/2020 7163
Harman Becker	NTG6N ENTRY/MID (head unit) Production: Germany	64019/SDPPI/2019 7163

Manufacturer	Model designation	Radio equipment approval number
Harman Becker	NTG6N HIGH (head unit) Production: Germany	64018/SDPPI/2019 7163
Harman Becker	NTG6N ENTRY/MID (head unit) Production: Hungary	63775/SDPPI/2019 7163
Harman Becker	NTG6N HIGH (head unit) Production: Hungary	63774/SDPPI/2019 7163
Harman Becker	NTG7 MID (head unit)	65544/SDPPI/2020 7163
Harman Becker	NTG7 HIGH (head unit)	70513/SDPPI/2020 7163
Harman Becker	NTG7 PREMIUM (head unit)	65543/SDPPI/2020 7163
Harman Becker	NTG7 PREMIUM PLUS (head unit)	70512/SDPPI/2020 7163
Harman Becker	NTG7 RSU (control unit)	66387/SDPPI/2020 7163
Hirschmann	920510A (locking system)	81434/SDPPI/2022 7163
HELLA	DM4 (locking system)	69378/SDPPI/2020 7163

Manufacturer	Model designation	Radio equipment approval number
HUF	HUF13482 (locking system)	104103/SDPPI/2024 7163
Huf Baolong	TSSRE4A (tyre pressure sensor)	72438/SDPPI/2021 7163
MARQUARDT	DC12B (locking system)	59840/SDPPI/2019 7163
MARQUARDT	MS2 (locking system)	67372/SDPPI/2020 7163
MARQUARDT	DD1 (Fond Seat Module)	98171/ SDPPI/ 2024 7163
MARQUARDT	DE1 (Fond Seat Module)	97584/ SDPPI/ 2024 7163
Schrader	MC34MA4 (tyre pressure monitoring system control unit)	25626/SDPPI/2015 3612
Visteon	Connect 5 (head unit)	61671/SDPPI/2019 7163

ISRAEL

REGULATORY RADIO IDENTIFIERS

Manufacturer	Model designation	Radio equipment approval number
		Approval number of the Ministry of Communications:
Continental ADC	SRR6-A (control unit)	Importer no.: 510242670
Bosch	LRR3 (radar sensor)	55-08334
Bosch	MRR1Rear (radar sensor)	55-08333
Bosch	MRRe14FCR (radar sensor)	55-08395
Bosch	FR5CPCCF (radar sensor)	55-08783
Bosch	F5CP12 (radar sensor)	55-12854
Continental Automotive	MARS Keyless (locking system)	55-13749
Continental Automotive Technologies	NTG7Q MID LF2 (head unit)	51-90718
Continental Automotive Technologies	NTG7Q HIGH LF2 (head unit)	51-90717
Continental Automotive Technologies	NTG7Q PREMIUM LF2 (head unit)	51-90719
Harman Becker	NTG7 HIGH-IL (head unit)	51-89476
Harman Becker	NTG7 PREMIUMPLUS-IL (head unit)	51-89475
HELLA	DM4 (locking system)	55-14271

Manufacturer	Model designation	Radio equipment approval number
Huf Baolong	TSSRE4A (tyre pressure sensor)	63-66757
Huf Baolong	TSSRE4Uf (tyre pressure sensor)	63-66757
Huf Baolong	TSSSG4G6b (tyre pressure monitoring system control unit)	63-68102
MARQUARDT	DC12B (locking system)	55-12215
MARQUARDT	MS2 (locking system)	51-85192
WITTE-Velbert	SDHTAG3NFC (locking system)	55-12216
Vitesco	HFA30 (radar sensor)	56-01011

JAMAICA

REGULATORY RADIO IDENTIFIERS

Manufacturer	Model designation
Continental Automotive	MARS Keyless (locking system)
HELLA	DM4 (locking system)
Hirschmann	920510A (locking system)
Huf Baolong	TSSRE4A (tyre pressure sensor)
Huf Baolong	TSSRE4Uf (tyre pressure sensor)
Huf Baolong	TSSSG4G6b (tyre pressure monitoring system control unit)
MARQUARDT	DC12B (locking system)
MARQUARDT	MS2 (locking system)
Vitesco	HFA30 (radar sensor)

JAPAN

REGULATORY RADIO IDENTIFIERS

Manufacturer	Model designation	Radio equipment approval number
Continental Automotive Technologies	NTG7Q HIGH LF2 (head unit)	003-230113
Continental Automotive Technologies	NTG7Q PREMIUM LF2 (head unit)	003-230112
Vitesco	HFA30 (radar sensor)	209-J00495

JORDAN

REGULATORY RADIO IDENTIFIERS

Manufacturer	Model designation	Radio equipment approval number
Continental ADC	SRR6-A (control unit)	TRC/34/13029/2023

CANADA

REGULATORY RADIO IDENTIFIERS

Manufacturer	Model designation	Radio equipment approval number
Continental ADC	SRR6-A (control unit)	IC: 4135A-SRR6A
Continental Automotive Technologies	NTG7Q MID LF2 (head unit)	IC: NTG7QMIDLF2
Continental Automotive Technologies	NTG7Q HIGH LF2 (head unit)	IC: NTG7QHIGLF2
Continental Automotive Technologies	NTG7Q PREMIUM LF2 (head unit)	IC: NTG7QPREF2
Hirschmann	920510A (locking system)	IC:8653A-920510A
Huf Baolong	TSSRE4A (tyre pressure sensor)	IC: 4008C-TSSRE4A
Huf Baolong	TSSRE4Uf (tyre pressure sensor)	IC: 3702A-TSSRE4UF
Vitesco	HFA30 (radar sensor)	28616-HFA30

Information on installation clearances

Charging unit for the wireless charging of mobile devices (WMI):

The charging unit for the wireless charging of mobile devices (WMI) complies with the FCC and IC radiation exposure limits that have been defined for an uncontrolled environment. This equipment must be installed and operated with a minimum distance of 0 cm (in contact) between the radiation source and your body. This transmitter must not be placed in the same location as, or used at the same time as, another transmitter or antenna.

Radar sensors:

ARS4-C (Continental ADC), ARS4-B (Continental ADC), ARS4-A (Continental ADC), FR5CPCCF (Bosch), MRR1REAR (Bosch), MRREVO14F (Bosch), LRR3 (Bosch), 77V12BSM (Veoneer), 77V12CRN (Veoneer), MMRV1 (Veoneer)

This equipment should be installed and operated with a minimum distance of 20 cm between the radiation source and your body.

Control units:

SRR6-A (Continental ADC)

Information on exposure to high-frequency radiation:

This equipment complies with the FCC radiation exposure limits that have been defined for an uncontrolled environment. This equipment should be installed and operated with a minimum distance of 20 cm between the radiation source and your body. This transmitter must not be placed in the same location as, or operated in conjunction with, any other antenna or transmitter.

KUWAIT

REGULATORY RADIO IDENTIFIERS

Manufacturer	Model designation	Radio equipment approval number
Huf Baolong	TSSRE4A (tyre pressure sensor)	Ref. 5420
Huf Baolong	TSSRE4Uf (tyre pressure sensor)	Ref. 3591
Huf Baolong	TSSSG4G6b (tyre pressure monitoring system control unit)	Ref. 3271
Vitesco	HFA30 (radar sensor)	Ref. 7272

MALAYSIA

REGULATORY RADIO IDENTIFIERS

Manufacturer	Model designation	Radio equipment approval number
Bosch	FR5CPCCF (radar sensor)	CIDF15000490
Bosch	LRR3 (radar sensor)	CIDF15000490
Bosch	MRR1Rear (radar sensor)	CIDF15000490
Bosch	MRRe14FCR (radar sensor)	CIDF15000490
Bosch	MRRevo14F (radar sensor)	CIDF15000490
Bosch	F5CP12 (radar sensor)	RGLN/30A/0522/S(22-2490)
Continental Automotive	MARS Keyless (locking system)	CIDF15000578
Continental Automotive Technologies	NTG7Q MID LF2 (head unit)	RCCT/92G/0423/S(23-0350)
Continental Automotive Technologies	NTG7Q HIGH LF2 (head unit)	CCT/91G/0323/S(23-1291)
Continental Automotive Technologies	NTG7Q PREMIUM LF2 (head unit)	RGQB/05A/0323/S(23-1293)
HELLA	DM4 (locking system)	CIDF15000578
Hirschmann	920510A (locking system)	RFFK/01A/1117/S(17-3581)
HUF	HUF13482 (locking system)	HIDF15000153
Huf Baolong	TSSRE4A (tyre pressure sensor)	HIDF15000153
Huf Baolong	TSSRE4Uf (tyre pressure sensor)	HIDF15000153
MARQUARDT	DC12B (locking system)	RAUU/62A/0311/S(11-0263)
MARQUARDT	MS2 (locking system)	RDDK/31A/0217/S(17-0405)
Vitesco	HFA30 (radar sensor)	RGZK/03A/1223/S(23-5530)

MOROCCO

REGULATORY RADIO IDENTIFIERS

Manufacturer	Model designation	Radio equipment approval number
		AGREE PAR L'ANRT MAROC
Continental ADC	SRR6-A (control unit)	MR 40021 ANRT 2023/09/19
Bosch	FR5CPCCF (radar sensor)	MR 20575 ANRT 2019-07-29
Bosch	LRR3 (radar sensor)	MR 5371 ANRT 2010 2019-12-05
Bosch	MRR1Rear (radar sensor)	MR 9186 ANTR 2014-04-22
Bosch	MRRe14FCR (radar sensor)	MR 13900 ANTR 2017-05-04
Bosch	F5CP12 (radar sensor)	MR00032137ANRT2022
Continental Automotive	MARS Keyless (locking system)	MR 13681 ANTR 2017-04-04
HELLA	DM4 (locking system)	MR 14426 ANTR 2017-07-28

Manufacturer	Model designation	Radio equipment approval number
MARQUARDT	DC12B (locking system)	MR 6698 ANTR 2021-11-04
Hirschmann	920510A (locking system)	MR 14779 ANTR 2017-09-25
Huf Baolong	TSSRE4A (tyre pressure sensor)	AGREE PAR L'ANRT MAROC MR 14320 ANRT 2017 Date d'agrement: 07/07/2017
Huf Baolong	TSSRE4Uf (tyre pressure sensor)	AGREE PAR L'ANRT MAROC MR 20944 ANRT 2019 Date d'agrement: 07/07/2017
MARQUARDT	DC12B (locking system)	AGREE PAR L'ANRT MAROC MR 6698 ANTR 2021 Date d'agrement: 04/11/2021
MARQUARDT	MS2 (locking system)	MR 13300 ANTR 2017-02-15
Schrader	MC34MA4 (tyre pressure monitoring system control unit)	AGREE PAR L'ANRT MAROC MR 6706 ANTR Date d'agrement: 2011-11-17

MEXICO

REGULATORY RADIO IDENTIFIERS

NOM Manufacturer	NYCE Model designation	ANCE Radio equipment approval number
Bosch	LRR3 (radar sensor)	IFETEL: RCPBOLR09-0828
Bosch	MRR1Rear (radar sensor)	IFETEL: RCPBOMR14-0922
Bosch	MRRe14FCR (radar sensor)	IFETEL: RCPBOMR17-0598
Continental Automotive	MARS Keyless (locking system)	IFETEL: RLVDAMA18-1827
Continental Automotive Technologies	NTG7Q MID LF2 (head unit)	IFETEL: MEMENT23 - 12200
Continental Automotive Technologies	NTG7Q HIGH LF2 (head unit)	IFETEL: MEMENT23 - 11923
Continental Automotive Technologies	NTG7Q PREMIUM LF2 (head unit)	IFETEL: MEMENT23 - 12204
HELLA	DM4 (locking system)	IFETEL: RLVHEDM17-10
Hirschmann	920510A (locking system)	IFETEL: RLVHI9217-1754
HUF	HUF13482 (locking system)	IFETEL: MEHUHU24-25903
Huf Baolong	TSSRE4A (tyre pressure sensor)	IFETEL: RLVBHTS19-1995
MARQUARDT	DC12B (locking system)	IFETEL: RLVMContinental ADC11-0446
MARQUARDT	MS2 (locking system)	IFETEL: RLVMAMS17-0222
Schrader	MC34MA4 (tyre pressure monitoring system control unit)	IFETEL: RCPSCMR14-062
Vitesco	HFA30 (radar sensor)	IFETEL: ROVIHF24-02919

MONGOLIA

REGULATORY RADIO IDENTIFIERS

Manufacturer	Model designation	Radio equipment approval number
Continental Automotive	MARS Keyless (locking system)	A18000328
HELLA	DM4 (locking system)	A18000329
Huf Baolong	TSSRE4A (tyre pressure sensor)	A19000569
Huf Baolong	TSSSG4G6b (tyre pressure monitoring system control unit)	A21000451
MARQUARDT	DC12B (locking system)	A19000371
MARQUARDT	MS2 (locking system)	A18000289
Vitesco	HFA30 (radar sensor)	A23001126

NIGER

REGULATORY RADIO IDENTIFIERS

Manufacturer	Model designation	Radio equipment approval number
Continental Automotive	MARS Keyless (locking system)	083/ARCEP/DG/19
HELLA	DM4 (locking system)	082/ARCEP/DG/19
MARQUARDT	DC12B (locking system)	008/ARCEP/DG/19
MARQUARDT	MS2 (locking system)	014/ARCEP/DG/19

NIGERIA

REGULATORY RADIO IDENTIFIERS

Manufacturer	Model designation
Continental ADC	SRR6-A (control unit)
Bosch	FR5CPCCF (radar sensor)
Bosch	MRR1Rear (radar sensor)
Bosch	MRRe14FCR (radar sensor)
Bosch	F5CP12 (radar sensor)
Continental Automotive	MARS Keyless (locking system)
HELLA	DM4 (locking system)
Hirschmann	920510A (locking system)
Huf Baolong	TSSRE4Uf (tyre pressure sensor)
Huf Baolong	TSSSG4G6b (tyre pressure monitoring system control unit)
MARQUARDT	DC12B (locking system)
MARQUARDT	MS2 (locking system)
Vitesco	HFA30 (radar sensor)

OMAN

REGULATORY RADIO IDENTIFIERS

Manufacturer	Model designation	Radio equipment approval number
Continental ADC	SRR6-A (control unit)	TRA/TA-R/16591/23
Bosch	FR5CPCCF (radar sensor)	TRA/TA-R/7983/19 D172338
Bosch	LRR3 (radar sensor)	TRA/TA-R/1049/09
Bosch	MRR1Rear (radar sensor)	TRA/TA-R/1849/14
Bosch	MRRe14FCR (radar sensor)	TRA/TA-R/4353/17
Bosch	F5CP12 (radar sensor)	TRA/TA-R/13339/22
Continental Automotive	MARS Keyless (locking system)	TRA/TA-R/4158/17 D080134
HELLA	DM4 (locking system)	TRA/TA-R/4548/17 D080134
Hirschmann	920510A (locking system)	TRA/TA-R/4748/17 D080134
HUF	HUF13482 (locking system)	TRA/TA-R/18930/24
Huf Baolong	TSSRE4Uf (tyre pressure sensor)	TRA/TA-R/8240/19
MARQUARDT	DC12B (locking system)	TRA/TA-R/0227/11 D080353
Vitesco	HFA30 (radar sensor)	TRA/TA-R/17028/23 172338D

PAKISTAN

REGULATORY RADIO IDENTIFIERS

Manufacturer	Model designation	Radio equipment approval number
Continental ADC	SRR6-A (control unit)	TAC NO: 9.669/2024
Bosch	FR5CPCCF (radar sensor)	TAC NO: 9.198/2020
Bosch	F5CP12 (radar sensor)	TAC NO: 9.243/2023
Continental Automotive	MARS Keyless (locking system)	TAC NO: 9.213/2017
HELLA	DM4 (locking system)	TAC NO: 9.409/2017
Hirschmann	920510A (locking system)	TAC NO: 9.287/2020
Huf Baolong	TSSRE4A (tyre pressure sensor)	TAC NO: 9.620/2017
Huf Baolong	TSSRE4Uf (tyre pressure sensor)	TAC NO: 9.9903/2019
Huf Baolong	TSSSG4G6b (tyre pressure monitoring system control unit)	TAC NO: 9.9345/2019
MARQUARDT	DC12B (locking system)	TAC NO: 9.829/2013
MARQUARDT	MS2 (locking system)	TAC NO: 9.133/2017
Vitesco	HFA30 (radar sensor)	TAC NO: 9.1058/2023

PARAGUAY

REGULATORY RADIO IDENTIFIERS

Manufacturer	Model designation	Radio equipment approval number
Continental ADC	SRR6-A (control unit)	2023-11-I-0817
Bosch	FR5CPCCF (radar sensor)	2019-09-I-0508
Bosch	MRRe14FCR (radar sensor)	2017-06-I-0000162
Bosch	MRR1Rear (radar sensor)	2019-05-I-000236
Bosch	F5CP12 (radar sensor)	2019-05-I-000236
Continental Automotive	MARS Keyless (locking system)	2017-05-I-0000136 y
HELLA	DM4 (locking system)	2022-06-I-0388 y 2017-08-I-0000261
Hirschmann	920510A (locking system)	2023-01-I-0058
HUF	HUF13482 (locking system)	2024-08-I-0727
Huf Baolong	TSSRE4A (tyre pressure sensor)	2022-08-I-0528
MARQUARDT	DC12B (locking system)	2021-05-I-0304; 2016-5-I-000144 y 2011-06-I-0067
MARQUARDT	MS2 (locking system)	2021-12-I-0773 y 2017-04-I-0000101
Vitesco	HFA30 (radar sensor)	2023-11-I-0808

PHILIPPINES

REGULATORY RADIO IDENTIFIERS

Manufacturer	Model designation	Radio equipment approval number
Bosch	FR5CPCCF (radar sensor)	ESD-1920531C
Bosch	MRR1Rear (radar sensor)	ESD-1408917C
Bosch	MRRe14FCR (radar sensor)	ESD-1716172C

Manufacturer	Model designation	Radio equipment approval number
Bosch	F5CP12 (radar sensor)	ESD-RCE-2229495
Continental Automotive	MARS Keyless (locking system)	ESD-1714865C
HELLA	DM4 (locking system)	ESD-1715539C
Hirschmann	920510A (locking system)	ESD-1715811C
Huf Baolong	TSSRE4A (tyre pressure sensor)	ESD-1715393C
Huf Baolong	TSSRE4Uf (tyre pressure sensor)	ESD-1920803C
MARQUARDT	DC12B (locking system)	ESD-1105216C
MARQUARDT	MS2 (locking system)	ESD-1715652C
Vitesco	HFA30 (radar sensor)	ESD-RCE-2335375

ZAMBIA

REGULATORY RADIO IDENTIFIERS

Manufacturer	Model designation	Radio equipment approval number
Continental ADC	SRR6-A (control unit)	ZMB/ZICTA/TA2023/11/37
Continental Automotive	MARS Keyless (locking system)	ZMB/ZICTA/TA/2019/3/3
HELLA	DM4 (locking system)	ZMB/ZICTA/TA/2019/3/4
MARQUARDT	DC12B (locking system)	ZMB/ZICTA/TA/2019/5/17
MARQUARDT	MS2 (locking system)	ZMB/ZICTA/TA/2018/9/30

SENEGAL

AGREE PAR ARTP SENEGAL

Numéro d'agrément : XXXXXX/AG/ER

REGULATORY RADIO IDENTIFIERS

Manufacturer	Model designation	Radio equipment approval number
Continental ADC	SRR6-A (control unit)	072710/AG/ER
Continental Automotive Technologies	NTG7Q MID LF2 (head unit)	072486/AG/ER
Continental Automotive Technologies	NTG7Q HIGH LF2 (head unit)	072487/AG/ER
Continental Automotive Technologies	NTG7Q PREMIUM LF2 (head unit)	072488/AG/ER

Manufacturer	Model designation	Radio equipment approval number
Continental Automotive Technologies	NTG7Q PREMIUMPLUS LF2 (head unit)	072689/AG/ER
HUF	HUF13482 (locking system)	072954/AG/ER

SERBIA

REGULATORY RADIO IDENTIFIERS

Manufacturer	Model designation	Radio equipment approval number
Continental ADC	SRR6-A (control unit)	038 23
Bosch	FR5CPCCF (radar sensor)	011 19
Bosch	LRR3 (radar sensor)	011 19
Bosch	MRR1Rear (radar sensor)	011 17
Bosch	MRRe14FCR (radar sensor)	005 17
Continental Automotive	MARS Keyless (locking system)	005 20
Continental Automotive Technologies	NTG7Q MID LF2 (head unit)	005 23
Continental Automotive Technologies	NTG7Q HIGH LF2 (head unit)	005 23
Continental Automotive Technologies	NTG7Q PREMIUM LF2 (head unit)	005 23
HELLA	DM4 (locking system)	005 20
Hirschmann	920510A (locking system)	005 20
HUF	HUF13482 (locking system)	005 24
Huf Baolong	TSSRE4A (tyre pressure sensor)	005 23
Huf Baolong	TSSRE4Uf (tyre pressure sensor)	005 22
Huf Baolong	TSSSG4G6b (tyre pressure monitoring system control unit)	005 22
MARQUARDT	DC12B (locking system)	005 20
MARQUARDT	MS2 (locking system)	011 17
Vitesco	HFA30 (radar sensor)	011

SINGAPORE

REGULATORY RADIO IDENTIFIERS

Manufacturer	Model designation	Radio equipment approval number
		Complies with IMDA Standards
Continental ADC	SRR6-A (control unit)	DB103365
Bosch	FR5CPCCF (radar sensor)	DA105282
Bosch	LRR3 (radar sensor)	DB101762

Manufacturer	Model designation	Radio equipment approval number
Bosch	MRR1Rear (radar sensor)	DA105282
Bosch	MRRevo14F (radar sensor)	DA103365
Bosch	MRRe14FCR (radar sensor)	DB03227
Bosch	F5CP12 (radar sensor)	N3827-22
Continental Automotive	MARS Keyless (locking system)	DA105282
Continental Automotive Technologies	NTG7Q MID LF2 (head unit)	DA105282
Continental Automotive Technologies	NTG7Q HIGH LF2 (head unit)	DA105282
Continental Automotive Technologies	NTG7Q PREMIUM LF2 (head unit)	DA105282
HELLA	DM4 (locking system)	DA103365 N3308-22
Hirschmann	920510A (locking system)	N1412-18
HUF	HUF13482 (locking system)	DB105654
Huf Baolong	TSSRE4A (tyre pressure sensor)	DA105282
Huf Baolong	TSSRE4Uf (tyre pressure sensor)	DA103365
Huf Baolong	TSSSG4G6b (tyre pressure monitoring system control unit)	DA28467
MARQUARDT	DC12B (locking system)	DA103365
MARQUARDT	MS2 (locking system)	DA103787
Meta System	ITS/TPS (interior protection)	DA103365
Meta System	MUW II (interior protection)	DA103365
Veoneer	6208428 (radar sensor)	N2743-16
Veoneer	24 GHz MMR (radar sensor)	N2955-17
Visteo	HFA30 (radar sensor)	N4949-23
WITTE-Velbert	SDHTAG3NFC (locking system)	DA107248 N1755-20

SOUTH AFRICA

REGULATORY RADIO IDENTIFIERS

Manufacturer	Model designation	Radio equipment approval number
Continental ADC	SRR6-A (control unit)	TA-2023/1985
Bosch	FR5CPCCF (radar sensor)	TA-2019/1200
Bosch	MRR1Rear (radar sensor)	TA-2014/212
Bosch	MRRe14FCR (radar sensor)	TA-2017/2013
Bosch	LRR3 (radar sensor)	TA-2009/464
Bosch	F5CP12 (radar sensor)	TA-2022/0153

Manufacturer	Model designation	Radio equipment approval number
Continental Automotive	MARS Keyless (locking system)	TA-2016/3500
Continental Automotive Technologies	NTG7Q MID LF2 (head unit)	TA-2023/0091
Continental Automotive Technologies	NTG7Q HIGH LF2 (head unit)	TA-2023/0111
Continental Automotive Technologies	NTG7Q PREMIUM LF2 (head unit)	TA-2023/0090
HELLA	DM4 (locking system)	TA-2017/2518
Hirschmann	920510A (locking system)	TA-2017/2350
Huf Baolong	TSSRE4A (tyre pressure sensor)	TA-2017/1393
Huf Baolong	TSSRE4Uf (tyre pressure sensor)	TA-2019/1853
Huf Baolong	TSSSG4G6b (tyre pressure monitoring system control unit)	TA-2019/1440
MARQUARDT	DC12B (locking system)	TA-2011/370
MARQUARDT	MS2 (locking system)	TA-2016/3314
Schrader	MC34MA4 (tyre pressure monitoring system control unit)	TA-2011/1370
Visteo	HFA30 (radar sensor)	TA-2023/2469

SOUTH KOREA

REGULATORY RADIO IDENTIFIERS

Manufacturer	Model designation	Radio equipment approval number
Continental Automotive Technologies	NTG7Q LF2 (head unit)	R-R-TeH- NTG7QLF2
Hirschmann	920510A (locking system)	R-C-0HR-920510A
Huf Baolong	TSSRE4A (tyre pressure sensor)	R-CRM-HHFTSSRE4A
Huf Baolong	TSSRE4Uf (tyre pressure sensor)	R-CRM-HHF-TSSRE4A
Huf Baolong	TSSSG4G6b (tyre pressure sensor)	R-R-HEB-TSSSG4G6B
HUF	HUF13482 (locking system)	R-R-HHF-HUF-13482
Visteo	HFA30 (radar sensor)	R-R-vT2-HFA30

THAILAND

REGULATORY RADIO IDENTIFIERS

Manufacturer	Model designation	Radio equipment approval number
Continental Automotive Technologies	NTG7Q PREMIUM LF2 (head unit)	130111-23-0132

TOGO

REGULATORY RADIO IDENTIFIERS

Manufacturer	Model designation	Radio equipment approval number
Continental Automotive	MARS Keyless (locking system)	No. 059/24
HELLA	DM4 (locking system)	No. 039/19
MARQUARDT	DC12B (locking system)	No. 057/19
MARQUARDT	MS2 (locking system)	No. 008/19

UKRAINE

REGULATORY RADIO IDENTIFIERS

Manufacturer	Model designation	Radio equipment approval number
Continental ADC	SRR6-A (control unit)	UA RF: 1ADCG001
Continental Automotive	MARS Keyless (locking system)	RTS.UKR.355-34/18
Continental Automotive Technologies	NTG7Q MID LF2 (head unit)	UA.TR.052
Continental Automotive Technologies	NTG7Q HIGH LF2 (head unit)	UA.TR.052
Continental Automotive Technologies	NTG7Q PREMIUM LF2 (head unit)	UA.TR.052
HELLA	DM4 (locking system)	UA.TR.109
Hirschmann	920510A (locking system)	UKR. 355-9/20
Hirschmann	920508A (locking system)	Supplier number: 16833352
Hirschmann	920508B (locking system)	Supplier number: 16833352
Huf Baolong	TSSRE4A (tyre pressure sensor)	UA 1.001.018568-19-TE
Huf Baolong	TSSRE4Uf (tyre pressure sensor)	UA 1.001.020702-19-TE
Huf Baolong	TSSSG4G6b (tyre pressure monitoring system control unit)	UA 1.001.019289-19-TE
MARQUARDT	DC12B (locking system)	UA.R.TR.052.308-19
MARQUARDT	MS2 (locking system)	UA1.001.019129-19-TE

UZBEKISTAN

REGULATORY RADIO IDENTIFIERS

Manufacturer	Model designation
Continental Automotive	MARS Keyless (locking system)
HELLA	DM4 (locking system)
MARQUARDT	DC12B (locking system)

Manufacturer	Model designation
MARQUARDT	MS2 (locking system)
Visteo	HFA30 (radar sensor)

UNITED ARAB EMIRATES

TDRA هيئة تنظيم الاتصالات والحكومة الرقمية TELECOMMUNICATIONS AND DIGITAL GOVERNMENT REGULATORY AUTHORITY

REGULATORY RADIO IDENTIFIERS

Manufacturer	Model designation	Radio equipment approval number
Bosch	FR5CPCCF (radar sensor)	TA RTTE: ER74533/19, DA36758/14
Continental Automotive	MARS Keyless (locking system)	TRA ER56005/17, DA44932/15
Continental Automotive Technologies	NTG7Q MID LF2 (head unit)	TDRA ER17731/23, DA76163/18
Continental Automotive Technologies	NTG7Q HIGH LF2 (head unit)	TDRA ER17730/23, DA76163/18
Continental Automotive Technologies	NTG7Q PREMIUM LF2 (head unit)	TDRA ER17732/23, DA76163/18
HELLA	DM4 (locking system)	TRA ER56616/17, DA44932/15
Hirschmann	920510A (locking system)	TRA ER59686/17
Huf Baolong	TSSRE4A (tyre pressure sensor)	TRA ER57806/17 DA36976/14
Huf Baolong	TSSRE4Uf (tyre pressure sensor)	TRA ER75266/19
Huf Baolong	TSSSG4G6b (tyre pressure monitoring system control unit)	TRA ER7307/19 DA0086237/12
HUF	HUF13482 (locking system)	TRA ER33320/24
MARQUARDT	DC12B (locking system)	TRA ER0067828/11 DA0018994/09
MARQUARDT	MS2 (locking system)	TRA ER52668/17, DA0018994/09
Visteo	HFA30 (radar sensor)	TRA ER25428/23

UNITED STATES

REGULATORY RADIO IDENTIFIERS

Manufacturer	Model designation	Radio equipment approval number
Continental ADC	SRR6-A (control unit)	FCC ID: OAYSRR6A
Continental Automotive Technologies	NTG7Q MID LF2 (head unit)	FCC ID: NTG7QMIDLF2
Continental Automotive Technologies	NTG7Q HIGH LF2 (head unit)	FCC ID: NTG7QHIGLF2
Continental Automotive Technologies	NTG7Q PREMIUM LF2 (head unit)	FCC ID: NTG7QPRELF2
Hirschmann	920510A (locking system)	FCC ID: XTJ920510A
Huf Baolong	TSSRE4A (tyre pressure sensor)	FCC ID: YGOTSSRE4A
Huf Baolong	TSSRE4Uf (tyre pressure sensor)	FCC ID: OYGTSSRE4UF
Schrader	HSW4T (tyre pressure monitoring system control unit)	FCC ID: MRXMC34MA4
Visteo	HFA30 (radar sensor)	FCC ID: 2A6TC-HFA30

Information on installation clearances

Charging unit for the wireless charging of mobile devices (WMI):

The charging unit for the wireless charging of mobile devices (WMI) complies with the FCC and IC radiation exposure limits that have been defined for an uncontrolled environment. This equipment must be installed and operated with a minimum distance of 0 cm (in contact) between the radiation source and your body. This transmitter must not be placed in the same location as, or used at the same time as, another transmitter or antenna.

Radar sensors:

ARS4-C (Continental ADC), ARS4-B (Continental ADC), ARS4-A (Continental ADC), FR5CPCCF (Bosch), MRR1REAR (Bosch), MRREVO14F (Bosch), LRR3 (Bosch), 77V12BSM (Veoneer), 77V12CRN (Veoneer), MMRV1 (Veoneer)

Information on exposure to high-frequency radiation:

This equipment complies with the FCC radiation exposure limits that have been defined for an uncontrolled environment. This equipment should be installed and operated with a minimum distance of 20 cm between the radiation source and your body.

This transmitter must not be placed in the same location as, or operated in conjunction with, any other antenna or transmitter.

Control units:

SRR6-A (Continental ADC)

Information on exposure to high-frequency radiation:

This equipment complies with the FCC radiation exposure limits that have been defined for an uncontrolled environment. This equipment should be installed and operated with a minimum distance of 20 cm between the radiation source and your body. This transmitter must not be placed in the same location as, or operated in conjunction with, any other antenna or transmitter.

VIETNAM

REGULATORY RADIO IDENTIFIERS

Manufacturer	Model designation	Radio equipment approval number
Bosch	FR5CPCCF (radar sensor)	Mercedes-Benz Vietnam Company Limited
Bosch	MRR1Rear (radar sensor)	Mercedes-Benz Vietnam Company Limited
Bosch	MRRe14FCR (radar sensor)	Mercedes-Benz Vietnam Company Limited
Continental Automotive	MARS Keyless (locking system)	Mercedes-Benz Vietnam Company Limited B0748240419AF04A2
HELLA	DM4 (locking system)	Mercedes-Benz Vietnam Company Limited CO204030321AF04A3
Hirschmann	920510A (locking system)	C0512261120AF04A3
Hirschmann	920510A (locking system)	C0290181218AF04A2 Supplier number: 16833352
MARQUARDT	DC12B (locking system)	Suntech Vietnam Technology Company Limited C0076210121AF04A3
MARQUARDT	MS2 (locking system)	Suntech Vietnam Technology Company Limited C0075210121AF04A3

Information about the specific absorption rate (SAR)

INFORMATION ON THE SPECIFIC ABSORPTION RATE

The values have been determined and tested in accordance with Décret n° 2019-1186 regarding the indication of the specific absorption rate of radio-based vehicle components.

Further information and updates are available at the following web address:

https://regulatoryradioinformation.corpinter.net/vans/vans/en

INFORMATION ON THE SPECIFIC ABSORPTION RATE

Vehicle components	SAR value in W/kg	Limit value to be used
D-WMI2020A	0.018 W/kg	4 W/kg
Gen20x.i2 LS3+	2.2 W/kg	4 W/kg
Gen20x.i2 LS4+	2.5 W/kg	4 W/kg
ARTEMIS communication module	0.471 W/kg	2 W/kg
HERMES communication module	< 0.4 W/kg	2 W/kg
RAMSES communication module	0.036 W/kg	2 W/kg
ECE DE003 & ECE DE004 compensators	< 0.2 W/kg	2 W/kg
NRCS2P	0.003 W/kg	2 W/kg
NTG6	0.199 W/kg	4 W/kg
NTG7	0.08 W/kg	2 W/kg
NTG7RSU	0.07 W/kg	2 W/kg
SM-T230NZ tablet PC	0.7 W/kg	4 W/kg
Radio data transmission telephone system	0.24 W/kg	2 W/kg

Importer information for regulatory radio components

MOLDOVA ONLY:
Importer

S.C. GRAND PREMIUM S.R.L. Moldova

mun. Chisinau, str. Hîncesti sos., 2/2

TURKEY ONLY:
Importer

Mercedes Benz Otomotiv Ticaret ve Hizmetler A.Ş. Genel Merkez

Akçaburgaz Mah. Süleyman Şah Cad. No: 6/1

34522 Esenyurt/Istanbul

UKRAINE ONLY:
Importer

PJSC „AUTOCAPITAL“

Velyka Vasylkivska str. 15/2

01004 Kyiv

Ukraine

UNITED KINGDOM ONLY:
Importer of Mercedes-Benz cars

Mercedes-Benz Cars UK Limited

Delaware Drive, Tongwell

Milton Keynes, MK15 8BA

England

Importer of Mercedes-Benz vans

Mercedes-Benz Vans UK Limited

Delaware Drive, Tongwell

Milton Keynes, MK15 8BA

England

Importer of Mercedes-Benz spare parts

Mercedes-Benz Parts Logistics

Delaware Drive, Tongwell

Milton Keynes, MK15 8BA

England

Further information and updates are available at the following web address:

https://regulatoryradioinformation.corpinter.net/vans/vans/en

Vehicle identification plate, vehicle identification number (VIN) and engine number

VEHICLE IDENTIFICATION PLATE

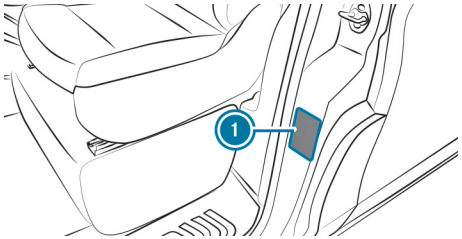

The vehicle identification plate (1) is located on the B-pillar on the driver's side.

> ⓘ The data is vehicle-specific and may differ from that shown. Always observe the specifications on your vehicle identification plate.

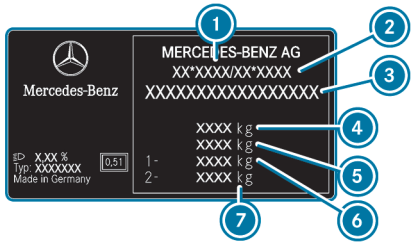

Example: vehicle identification plate

(1) Vehicle manufacturer
(2) EC operating permit number (only for certain countries)
(3) VIN (vehicle identification number)
(4) Permissible gross mass (kg)
(5) Permissible gross mass of vehicle combination (kg) (only for certain countries)
(6) Maximum permissible front axle load (kg)
(7) Maximum permissible rear axle load (kg)

IMPRINTED VIN IN THE ENGINE COMPARTMENT

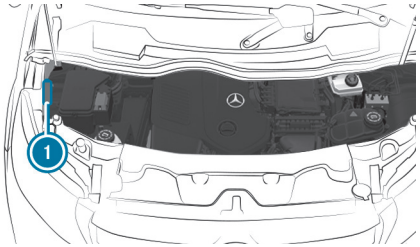

The VIN (1) is imprinted onto the longitudinal member in the engine compartment next to the fuse housing.

ENGINE NUMBER

The engine number is stamped onto the crankcase. More detailed information can be obtained at a qualified specialist workshop.

Operating fluids and capacities

Notes on operating fluids

WARNING
Risk of injury due to harmful operating fluids

Operating fluids can be toxic.

- When using, storing and disposing of operating fluids, observe the imprints on the respective original containers.
- Always keep operating fluids in the sealed original container.
- Always keep children away from operating fluids.

ENVIRONMENTAL NOTE
Pollution of the environment due to irresponsible disposal of operating fluids

Incorrect disposal of operating fluids can cause considerable damage to the environment.

- Dispose of operating fluids in an environmentally responsible manner.

OPERATING FLUIDS INCLUDE THE FOLLOWING:

- Fuels
- Exhaust gas aftertreatment additives, e.g.AdBlue®
- Lubricants
- Coolant
- Brake fluid
- Windscreen washer fluid
- Climate control system refrigerant

Only use products which have been approved for your vehicle by Mercedes-Benz. Damage caused to the vehicle by using products that have not been approved is not covered by the Mercedes-Benz warranty or goodwill gestures.

YOU CAN IDENTIFY OPERATING FLUIDS APPROVED BY MERCEDES-BENZ BY THE FOLLOWING LABELS ON THE CONTAINER:

- MB-Freigabe (e.g. MB-Freigabe 229.51)
- MB-Approval (e.g. MB-Approval 229.51)

FURTHER INFORMATION ON APPROVED OPERATING FLUIDS IS AVAILABLE FROM THE FOLLOWING SOURCES:

- In the Mercedes-Benz Specifications for operating fluids at https://operatingfluids.mercedes-benz.com (with details of specification).
- At a qualified specialist workshop

Additives for approved operating fluids are neither required nor permitted. Additives can cause engine damage and must therefore not be added to the operating fluids. Approved fuel additives are the exception.

The use of additives is always the responsibility of the vehicle operator. The use of additives may result in the restriction or loss of your warranty claims.

WARNING
Risk of fire or explosion from fuel

Fuels are highly flammable.

- Fire, naked flames, smoking and creating sparks must be avoided.
- Before refuelling, switch off the vehicle and, if fitted, the stationary heater and keep switched off during filling.

WARNING
Risk of injury from fuels

Fuels are poisonous and hazardous to your health.

- Do not swallow fuel or let it come into contact with skin, eyes or clothing.
- Do not inhale fuel vapour.
- Keep children away from fuel.
- Keep doors and windows closed during the refuelling process.

If you or other people come into contact with fuel, observe the following:

- Immediately rinse fuel off your skin with soap and water.
- If fuel comes into contact with your eyes, immediately rinse them thoroughly with clean water. Seek medical attention immediately.
- If you swallow fuel, seek medical attention immediately. Do not induce vomiting.
- Change immediately out of clothing that has come into contact with fuel.

Fuel

NOTES ON FUEL QUALITY FOR VEHICLES WITH PETROL ENGINES
Observe the notes on operating fluids (→ page 744).

NOTE
Damage due to incorrect fuel

Even small amounts of the wrong fuel could result in damage to the fuel system, engine and exhaust system.

► Refuel only with unleaded premium-grade petrol that conforms to the European standard EN 228 or an equivalent specification.

This fuel may contain up to 10% ethanol by volume. Your vehicle is suitable for use with E10 fuel.

NEVER REFUEL WITH THE FOLLOWING:

- Diesel
- Petrol with more than 10% ethanol by volume, e.g. E15, E20, E85, E100
- Petrol with more than 3% methanol by volume, e.g. M15, M30, M50, M85, M100
- Petrol with metallic additives

► Do not mix such fuels with the fuel recommended for your vehicle.

If you have accidentally refuelled with the wrong fuel:

► Do not switch on the vehicle.

► Contact a qualified specialist workshop.

NOTE
Malfunction due to contaminated fuel

Impurities in the fuel can lead to malfunctions of the fuel system.

► If you are using drums or canisters to refuel the vehicle, you should filter the fuel before filling.

The following compatibility indications for fuel apply to your vehicle.

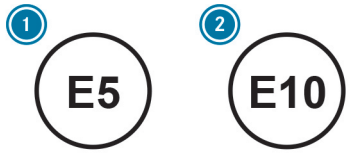

1 For petrol with a maximum of 5% ethanol by volume
2 For petrol with a maximum of 10% ethanol by volume

ACCORDING TO EUROPEAN STANDARD EN 16942, YOU CAN FIND THE COMPATIBILITY INDICATIONS AT THE FOLLOWING LOCATIONS:

- On the vehicle, on the information label on the fuel filler flap (→ page 27)
- On the fuel dispensers or pump nozzles suitable for your vehicle throughout Europe

If the available fuel is not sufficiently low in sulphur, it may produce unpleasant odours.

The recommended octane number for your vehicle can be found on the information label on the fuel filler flap (→ page 27).

Further information on fuel can be obtained at a filling station or a qualified specialist workshop.

NOTES ON ADDITIVES IN PETROL

Observe the notes on operating fluids (→ page 744).

NOTE
Damage from use of unsuitable additives

Even small amounts of the wrong additive may lead to malfunctions.

- Only add cleaning additives recommended for Mercedes-Benzto the fuel.

Mercedes-Benz recommends using brand-name fuels with additives.

In some countries, the available fuel may not contain sufficient amounts of additives. Deposits could build up in the fuel injection system as a result.

In this case, in consultation with a Mercedes-Benz service centre, the fuel should be mixed with the cleaning additive recommended by Mercedes-Benz.

You must observe the notes and mixing ratios indicated on the tank.

NOTES ON FUEL QUALITY FOR VEHICLES WITH DIESEL ENGINES

GENERAL NOTES

Observe the notes on operating fluids (→ page 744).

WARNING
Risk of fire from fuel mixture

If you mix diesel fuel with petrol, the flash point of the fuel mixture is lower than that of pure diesel fuel.

- Never refuel using petrol in diesel engines.
- Never mix petrol with diesel fuel.

NOTE
Damage due to incorrect fuel

Even small amounts of the wrong fuel could result in damage to the fuel system, the engine and the emission control system.

- ► Only refuel using sulphur-free diesel fuel that conforms to European standard EN 590, or an equivalent specification. In countries without sulphur-free diesel fuel, refuel using only low-sulphur diesel fuel with a sulphur content less than 50 ppm.

NEVER REFUEL WITH ONE OF THE FOLLOWING FUELS:

- Petrol
- Marine diesel
- Heating oil
- Pure fatty acid methyl ester or vegetable oil
- Paraffin or kerosene

If you have accidentally refuelled with the wrong fuel:

- ► Do not switch on the vehicle.
- ► Consult a qualified specialist workshop.

NOTE
Malfunction due to contaminated fuel

Impurities in the fuel can lead to malfunctions of the fuel system.

- ► If you are using drums or canisters to refuel the vehicle, you should filter the fuel before filling.

The following compatibility marks for fuel apply to your vehicle:

1. For diesel fuel with a maximum of 7% fatty acid methyl ester by volume (bio-diesel)
2. For diesel fuel with a maximum of 10% fatty acid methyl ester by volume (bio-diesel)
3. For diesel fuel with a maximum of 20% fatty acid methyl ester by volume (bio-diesel)

Refill with diesel fuel containing a maximum of 10% or 20% fatty acid methyl ester by volume (bio-diesel) only if the corresponding compatibility mark is present on your fuel filler flap.

IN ACCORDANCE WITH EUROPEAN STANDARD EN 16942, YOU WILL FIND THE COMPATIBILITY MARKS FOR FUEL IN THE FOLLOWING PLACES:

- On the vehicle, on the information label on the fuel filler flap(→ page 27)
- On the fuel dispensers or pump nozzles suitable for your vehicle throughout Europe

XTL-COMPATIBLE VEHICLES

ⓘ **Refuel with paraffinic diesel fuels in accordance with EN 15940 only if the appropriate compatibility mark is present on your fuel filler flap.**

Alternatively, you can also refuel with paraffinic diesel fuel (e.g. HVO = hydrogenated vegetable oil, GTL = Gas-To-Liquid) that complies with European standard EN 15940. Paraffinic diesel fuels are collectively known as XTL.

In accordance with European standard EN 16942, the following fuel compatibility marks apply to your XTL-compatible vehicle:

1 For paraffinic diesel fuel

B10 FATTY ACID METHYL ESTER

Mercedes-Benz approves the use of B10 fatty acid methyl ester (low-sulphur diesel fuel with a maximum of 10% by volume fatty acid methyl ester) for all vehicles with Euro 5 diesel engines with Common Rail Direct Injector (CDI).

Pure fatty acid methyl ester and diesel fuel that has a higher percentage of fatty acid methyl ester (e.g. B20) could damage the fuel system and the engine.

The identification of the fatty acid methyl ester on the fuel dispenser must clearly indicate that it fulfils the standard for low-sulphur diesel fuel. If the identification is not clear, do not refuel.

SULPHUR CONTENT

! **NOTE**
Damage to the emission control system for vehicles with diesel particulate filters

If you use diesel fuel with a sulphur content that is too high, the emission control system may be damaged.

► In countries without sulphur-free diesel fuel, refuel using only low-sulphur diesel fuel with a sulphur content less than 50 ppm.

INFORMATION ABOUT CURRENT COUNTRY-SPECIFIC SULPHUR CONTENT IS AVAILABLE:

- At a Mercedes-Benz service centre
- At https://operatingfluids.mercedes-benz.com under the specifications on Sheet Number 136.2

NOTES ON LOW OUTSIDE TEMPERATURES
Refuel your vehicle at the beginning of the winter until winter diesel fuel accounts for as much of the content of your tank as possible.

Before switching to winter diesel fuel, the fuel tank should be as empty as possible. When first refuelling with winter diesel fuel, keep the fuel level low (e.g. to reserve level). The next time you refuel, fill the fuel tank again normally.

FURTHER INFORMATION ON FUEL IS AVAILABLE:

- At a filling station
- At a qualified specialist workshop

TANK CONTENT AND FUEL RESERVE
The total capacity of the fuel tank may vary, depending on the vehicle equipment.

CAPACITY

Model	Total capacity
Vehicles with a diesel engine:	Approximately 57 litres or Approx. 70 litres
Vehicles with a petrol engine	Approx. 70 litres
Model	**Of which reserve fuel**
Vehicles with a diesel engine:	Approximately 10 litres
Vehicles with a petrol engine	Approximately 13 litres

AdBlue®

NOTES ON ADBLUE®
Observe the notes on operating fluids (⟶ page 744).

AdBlue® is a water-soluble fluid for the exhaust gas aftertreatment of diesel engines.

It may be improper or punishable in some countries to operate a vehicle that uses no AdBlue® or one that does not comply with the specifications of this Owner's Manual.

NOTE
Damage caused by additives in AdBlue® or by diluting AdBlue®

THE ADBLUE® EXHAUST GAS AFTERTREATMENT SYSTEM COULD BE DESTROYED BY THE FOLLOWING:

- additives in AdBlue®
- diluting AdBlue®

▶ Only use AdBlue® in accordance with ISO 22241.

▶ Do not mix additives.

▶ Do not dilute AdBlue®.

NOTE
Damage and malfunctions caused by impurities in AdBlue®

IMPURITIES IN ADBLUE® RESULT IN THE FOLLOWING:

- higher emission values
- damage to the catalytic converter
- engine damage
- malfunctions in the AdBlue® exhaust gas aftertreatment system

▶ Avoid impurities in AdBlue®.

AdBlue® residue crystallises after some time and stains the affected surfaces. Clean the dirty surfaces with water as soon as possible.

If you open the AdBlue® tank, small amounts of ammonia vapour may be released. Do not inhale any ammonia vapours that may be released. Fill the AdBlue® tank only in well-ventilated areas.

You can find information about filling capacity in the printed Owner's Manual.

ADBLUE® CONSUMPTION AND FILLING CAPACITY

FILLING QUANTITIES

The total capacity of the AdBlue® tank may vary, depending on the vehicle equipment.

TOTAL CAPACITY OF ADBLUE® TANK

Vehicle	Total capacity
All models	11.5 litres, 24 litres or 25 litres

ADBLUE® CONSUMPTION

Like fuel consumption, AdBlue® consumption is highly dependent upon driving style and operating conditions. AdBlue® consumption is usually in a range between 1% and 5% of fuel consumption. If necessary, AdBlue® must be topped up in accordance with the instructions when the refill message is displayed on the driver display. This may also be required between scheduled maintenance.

Check the AdBlue® fill level before making journeys outside Europe.

ADBLUE® RANGE AND FILL LEVEL

The AdBlue® fill level and range can be displayed via the on-board computer. The AdBlue® range shown is highly dependent upon driving style and operating conditions. The actual range may therefore differ from the range currently displayed on the on-board computer. The information given in the Owner's Manual in display messages regarding the reserve quantity and the minimum top-up quantity when the fuel tank is empty is also to be understood as guide values.

Display the AdBlue® range and level (⟶ page 482).

Engine oil

NOTES ON ENGINE OIL

Observe the notes on operating fluids (⟶ page 744).

NOTE
Engine damage caused by an incorrect oil filter, incorrect oil or additives

- Do not use engine oils or oil filters other than those which meet the specifications necessary for the prescribed service intervals.
- Do not alter the engine oil or oil filter in order to achieve longer change intervals than prescribed.
- Do not use additives.
- Have the engine oil changed after the prescribed intervals.

Mercedes-Benz recommends having the oil changed at a qualified specialist workshop.

Only engine oils approved for Mercedes-Benz may be used in Mercedes-Benz engines.

FURTHER INFORMATION ON ENGINE OIL AND OIL FILTERS:

- in the Mercedes-Benz Specifications for Service Products at https://operatingfluids.mercedes-benz.com (under specification designation).
- at a qualified specialist workshop

ENGINE OIL QUALITY AND FILLING QUANTITY

ENGINE OIL SPECIFICATIONS (PETROL ENGINES)

Model	MB-Freigabe or MB-Approval
Vehicles with M254 petrol engine	229.71[1], 229.72
Vehicles with M274 petrol engine	229.5, 229.6[1]

1 recommended for lowest possible fuel consumption (lowest SAE viscosity class in each case; observe possible restrictions of the approved SAE viscosity classes)

ENGINE OIL SPECIFICATIONS (DIESEL ENGINES)

Model	MB-Freigabe or MB-Approval
OM 654 Rear-wheel drive and all-wheel drive	229.51, 229.52, 229.61, 229.71[1)], 229.72

1 recommended for lowest possible fuel consumption (lowest SAE viscosity class in each case; observe possible restrictions of the approved SAE viscosity classes)

To achieve the lowest possible fuel consumption, it is recommended that the engine oil specifications identified in the table with the lowest SAE viscosity class are used. Observe any possible restrictions of the approved SAE viscosity classes.

If the engine oils listed in the table are not available, you may add a maximum 1.0 litre of the following engine oils once only:

ENGINE OILS FOR ONE-TIME FILLING ONLY IN EXCEPTIONAL CASES:

- **Vehicles with petrol engines:** MB-Freigabe or MB-Approval 229.3 or ACEA A3/B4

ENGINE OIL FILLING QUANTITY (PETROL ENGINES)

Model	Filling quantity
Vehicles with M254 petrol engine	Approximately 8.5 litres
Vehicles with M274 petrol engine	Approximately 7.7 litres

ENGINE OIL FILLING QUANTITY (DIESEL ENGINES)

Model	Filling quantity
OM 654 Rear-wheel drive and all-wheel drive	Approximately 9.0 litres

Notes on brake fluid

Observe the notes on operating fluids (⟶ page 744).

WARNING
Risk of an accident due to vapour pockets forming in the brake system

The brake fluid constantly absorbs moisture from the air. This lowers the boiling point of the brake fluid. If the boiling point is too low, vapour pockets may form in the brake system when the brakes are applied hard.

This impairs the braking effect.

► Have the brake fluid renewed at the specified intervals.

Have the brake fluid renewed every two years at a qualified specialist workshop.

NOTE
Damage to paint, plastic or rubber by brake fluid

There is a risk of damage to property if brake fluid comes into contact with paint, plastic or rubber.

► If paint, plastic or rubber comes into contact with brake fluid, rinse with water immediately.

Observe the notes on paintwork/matt finish paintwork care (⟶ page 653).

Only use brake fluid approved by Mercedes-Benz in accordance with MB-Freigabe or MB-Approval 331.0.

INFORMATION ON BRAKE FLUID IS AVAILABLE AT THE FOLLOWING LOCATIONS:

- in the Mercedes-Benz Specifications for Operating Fluids 331.0 at https://operatingfluids.mercedes-benz.com
- at a qualified specialist workshop

Coolant

NOTES ON COOLANT
Observe the notes on operating fluids (⟶ page 744).

WARNING
Risk of fire- and injury from antifreeze

If antifreeze comes into contact with hot component parts in the engine compartment, it may ignite.

- ► Allow the vehicle to cool down before you top up the antifreeze.
- ► Make sure that no antifreeze spills out next to the filler opening.
- ► Thoroughly clean the antifreeze from component parts before starting the vehicle.

NOTE
Damage caused by incorrect coolant

- ► Only add coolant that has been premixed with the required antifreeze protection.

INFORMATION ON COOLANT IS AVAILABLE FROM THE FOLLOWING SOURCES:

- In the Mercedes-Benz Specifications for Operating Fluids 320.1 at https://operatingfluids.mercedes-benz.com
- At a qualified specialist workshop

NOTE
Overheating at high outside temperatures

If an inappropriate coolant is used, the engine cooling system is not sufficiently protected against overheating and corrosion at high outside temperatures.

- ► Always use coolant approved for Mercedes-Benz.
- ► Observe the instructions in the Mercedes-Benz Specification for Operating Fluids 320.1.

NOTE
Paintwork damage due to coolant

- ► Do not spill coolant on painted surfaces.

Have the coolant replaced regularly at a qualified specialist workshop.

NOTE THE PROPORTION OF ANTICORROSION AGENT/ANTIFREEZE IN THE ENGINE COOLING SYSTEM WITHIN THE FOLLOWING TEMPERATURE RANGES:

- A minimum of 50% (antifreeze protection down to about -37 °C)
- A maximum of 55% (antifreeze protection down to -45 °C)

COOLANT FILLING QUANTITIES

ENGINE COOLING SYSTEM

Model	Filling quantity
All models	Approximately 10.4 l Approximately 13.4 l on vehicles with auxiliary heating

Windscreen washer fluid

NOTES ON WINDSCREEN WASHER FLUID

Observe the notes on operating fluids (⟶ page 744).

WARNING
- Risk of fire and injury due to windscreen washer concentrate

Windscreen washer concentrate is highly flammable. It could ignite if it comes into contact with hot engine component parts or the exhaust system.

► Make sure that no windscreen washer concentrate spills out next to the filler opening.

NOTE
Damage to the exterior lighting due to unsuitable windscreen washer fluid

Unsuitable windscreen washer fluids may damage the plastic surface of the exterior lighting.

► Only use windscreen washer fluids which are also suitable for use on plastic surfaces, e.g. MB SummerFit or MB WinterFit.

NOTE
Blocked spray nozzles caused by mixing windscreen washer fluids

► Do not mix MB SummerFit and MB WinterFit with other windscreen washer fluids.

Do not use distilled or de-ionised water. Otherwise, the fill level sensor may be actuated erroneously.

RECOMMENDED WINDSCREEN WASHER FLUID:

- above freezing point: e.g. MB SummerFit
- below freezing point: e.g. MB WinterFit

For the correct mixing ratio, refer to the information on the anti-freeze container.

Mix the washer fluid with windscreen washer fluid all year round.

Refrigerant

NOTES ON REFRIGERANT
The climate control system contains fluorinated greenhouse gases.

Observe the notes on operating fluids (⟶ page 744).

The following specifications apply only to EU and EFTA countries according to EU Directive 573/2024.

> **NOTE**
> Damage due to incorrect refrigerant
>
> If a non-approved refrigerant is used, the climate control system may be damaged.
>
> ► Use only R-1234yf refrigerant.

The refrigerant type for your vehicle can be found on the information label of the climate control system. The information label can be found on the radiator cross-member.

Maintenance work, suchas topping up the refrigerant or replacing components, may be carried out only by a qualified specialist workshop. All applicable specifications, as well as SAE Standard J639, must be adhered to.

Have all work on the climate control system carried out at a qualified specialist workshop.

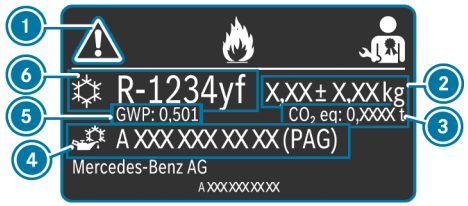

Information label (example - EU countries only)

1. Symbols for hazard and service information
2. Refrigerant filling quantity
3. CO_2 equivalent of the refrigerant used
4. PAG oil part number
5. GWP value (Global Warming Potential) of refrigerant used
6. Refrigerant type

THE SYMBOLS (1) ADVISE YOU OF THE FOLLOWING:

- Potential dangers
- Performance of maintenance work at a qualified specialist workshop

REFRIGERANT SPECIFICATIONS
The following specifications apply only to EU and EFTA countries according to EU Directive 573/2024.

REFRIGERANT DATA

Refrigerant filling quantity	CO_2 equivalent*
0.5 - 2.0 ± 0.01 kg	0.0003 t - 0.0010 t

*The CO_2 equivalent is calculated on the basis of the filling quantity using the following formula: CO_2 equivalent (t) = refrigerant filling quantity × GWP/1000.

The vehicle-specific filling quantity depends on the respective vehicle equipment. The filling quantity for your vehicle can be found on the information label for the air conditioning system inside the bonnet or at the front of the engine compartment.

Vehicle data

Information on vehicle dimensions

The following section contains important technical data for your vehicle. Your vehicle documents contain further vehicle-specific and equipment-dependent technical data such as vehicle dimensions and weights.

You can also find the latest technical data on the Internet at https://www.mercedes-benz.com

THE SPECIFIED FIGURES MAY VARY AS A RESULT OF THE FOLLOWING VARIABLES:

- Tyres
- Load
- Condition of the suspension
- Special equipment

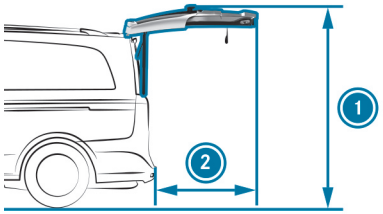

SWEPT AREA

All models	
1 Height of open tailgate	2153 mm
2 Height of open tailgate	1047 mm

VEHICLE DIMENSIONS

All models	
Vehicle length (compact version)	4895 mm
Vehicle length (long version)	5140 mm
Vehicle length (extra-long version)	5370 mm
Vehicle width including outside mirrors	2249 mm
Vehicle width excluding outside mirrors	1928 mm
Loading width	1205 mm
Vehicle height	1900 mm – 1920 mm
Loading height	1297 mm – 1326 mm
Wheelbase (compact version)	3200 mm
Wheelbase (long version)	3200 mm
Wheelbase (extra-long version)	3430 mm

Trailer hitch

Notes on the trailer hitch

WARNING
Risk of accident due to impermissible attachment of a trailer tow hitch

If you install a trailer tow hitch or other components, the longitudinal frame member is weakened and can break. The trailer may become detached from the vehicle.

There is a risk of an accident.

Only retrofit a trailer tow hitch if permissible.

Observe the notes on trailer operation (⟶ page 461).

Retrofitting a trailer hitch is only permissible if a towing capacity is specified in your vehicle documents.

Only use a trailer hitch which has been tested and specially approved by Mercedes-Benz for your vehicle.

Overview of mounting dimensions

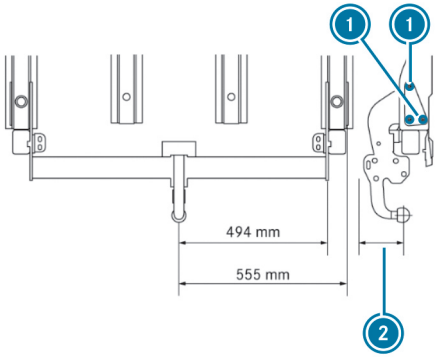

1 Fastening points
2 Distance from road surface

The distance between the trailer hitch and the road surface on an unladen vehicle depends on the vehicle type and the vehicle's equipment. Thus, it cannot be specified. The distance to the road surface of a laden vehicle is between 350 mm and 420 mm.

Trailer loads

Trailer operation is not permitted for vehicles with the M 254 petrol engine.

In trailer operation, the gross vehicle weight is increased by 100 kg for vehicles with passenger vehicle approval. The maximum permissible rear axle load is increased by 150 kg in trailer operation.

The road speed of the vehicle must be limited to a maximum of 100 km/h in accordance with Directive 92/21/EEC.

THE PERMISSIBLE WEIGHTS AND LOADS WHICH MUST NOT BE EXCEEDED CAN ALSO BE OBTAINED FROM THE FOLLOWING SOURCES OF INFORMATION:

- Vehicle documents
- The identification plates of the trailer hitch, trailer and vehicle

If the figures differ, the lowest figure applies.

When driving in mountainous areas, note that the engine output and with it the start-off gradeability of the vehicle, decrease with increasing altitude.

The following values apply for a minimum start-off gradeability of 12%.

GROSS COMBINATION WEIGHT RATING, TRAILER LOADS AND TONGUE WEIGHT

Permissible gross mass of vehicle combination	4,800 kg to 5,700 kg
Permissible trailer load, braked	2,000 kg to 2,500 kg
Permissible trailer load, unbraked	750 kg
Permissible tongue weight	100 kg

Lashing points and carrier systems

Loading capacity of the lashing points and tie-down eyes

Observe the notes on securing loads (⟶ page 624).

Rated tensile force is the maximum permissible pulling force on the lashing point.

GUIDE RAILS

THE RATED TENSILE FORCE OF THE LASHING POINTS OF A GUIDE RAIL IS 350 DAN, IF YOU OBSERVE THE FOLLOWING:

- the load on the load compartment floor is secured to two lashing points on the rail
- the distance to the nearest load-securing point on the same rail is approximately 1 m.

Information about roof luggage racks

Observe the notes on the carrier systems (⟶ page 45).

NOTE
Damage due to exceeding the maximum permissible roof load

If the weight of the roof luggage, including the roof luggage rack, exceeds the maximum permissible roof load, this can cause damage to the vehicle.

- ► Do not exceed the maximum permissible roof load.
- ► Arrange the supporting feet of the roof luggage rack at an even distance from each other.
- ► Install the basic carrier bars for rail in front of and behind the mid-section support.

MAXIMUM ROOF LOAD / PAIRS OF ROOF RACK SUPPORTS

Maximum roof load	Minimum number of pairs of supports
150 kg	3

This information applies if the load is distributed evenly across the entire roof area.

If the roof luggage rack is shorter, reduce the load proportionately. The maximum permitted load per pair of roof rack supports is 50 kg. The maximum permitted load of basic carrier bars for rail is 100 kg.

The driving, braking and steering characteristics of the vehicle will change with the type of load, the weight and the centre of gravity of the load. Comply

with the loading guidelines and further information about load distribution (⟶ page 623).

Display messages and warning and indicator lamps

This interactive PDF works like a website – tap or click a button to jump straight to where you want to go.
You can return here at any time via the navigation bar at the top left.

Display messages

Warning and indicator lamps

Display messages

Introduction

NOTES ON DISPLAY MESSAGES

> ⚠ **WARNING**
> Risk of accident if the driver's display fails
>
> If the driver's display fails or malfunctions, you may not be aware of any functional limitations to safety-critical systems. This may affect the operating safety of the vehicle.
>
> ► Park the vehicle safely as soon as possible and notify a qualified specialist workshop.

The driver display shows messages and warnings from certain systems. Ensure that your vehicle is operating safely at all times.

Display messages with graphic symbols may appear in simplified form in the Owner's Manual and may differ from the symbols on the driver display. The driver display shows high-priority display messages in red. A warning tone will also sound for specific display messages.

Please act in accordance with the display messages and follow the additional notes in this Owner's Manual.

IN ADDITION, SYMBOLS ARE SHOWN FOR SOME DISPLAY MESSAGES:

- ⓘ Further information
- [×] Hiding display messages

You can select the respective symbol by swiping left or right on the left-hand Touch Control. Press ⓘ to display further information on the media display. Pressing [×] hides the display message.

You can hide display messages to be acknowledged by pressing the 'Back' button [↩] or with the left-hand Touch Control. The display messages will be saved to the message memory.

Rectify the cause of a display message as quickly as possible.

High-priority display messages cannot be hidden. The driver display will show these display messages continuously until the cause of the display message has been rectified.

CALLING UP SAVED DISPLAY MESSAGES

► Call up the Service menu on the driver display.

The Message memory: XX message appears on the driver's display.

► Scroll through the display messages by swiping upwards or downwards on the left-hand Touch Control.

► **To exit the display:** press the [↩] back button.

Occupant safety

Display messages	Possible causes/consequences and ▶ Solutions
Front passenger airbag disabled See Owner's Manual	* The front passenger airbag has been disabled even though an adult or a person of adult build is on the front passenger seat. If additional forces are applied to the seat, the weight the system detects may be too low. **WARNING** Risk of injury- or fatalities if the front passenger airbag is deactivated If the front passenger airbag is deactivated, it will not be released in the event of an accident and can not therefore provide the protection for which it is designed. An occupant on the front passenger seat may then collide with parts of the vehicle interior, forexample, in particular if they are sitting too close to the cockpit. ▶ Ensure correct status of the front passenger airbag both prior to and during the journey. ▶ Stop the vehicle immediately in accordance with the traffic conditions. ▶ Ensure that no objects have become trapped beneath the front passenger seat. ▶ Check the status of the automatic front passenger airbag deactivation (⟶ page 137). ▶ If necessary, visit a qualified specialist workshop immediately.
Front passenger airbag enabled See Owner's Manual	* **THE FRONT PASSENGER AIRBAG WILL BE ENABLED WHILE THE VEHICLE IS IN MOTION IN THE FOLLOWING SITUATIONS:** • Even when a child, a small adult or an object weighing less than the system weight threshold is located on the front passenger seat. • Even when the front passenger seat is not occupied. The system may detect objects or forces that are adding to the weight applied to the seat.

Display messages	Possible causes/consequences and ▶ Solutions
	WARNING Risk of injury or death when using a child restraint system while the front passenger airbag is enabled If you secure a child in a child restraint system on the front passenger seat and the front passenger airbag is enabled, the front passenger airbag can deploy in the event of an accident. The child could be struck by the airbag. ▶ Ensure, both before and during the journey, that the status of the front passenger airbag is correct. NEVER use a rearward facing child restraint on a seat protected by an ACTIVE AIRBAG in front of it, DEATH or SERIOUS INJURY to the CHILD can occur. ▶ Stop the vehicle immediately in accordance with the traffic conditions. ▶ Ensure that no objects have become trapped beneath the front passenger seat. ▶ Check the status of automatic front passenger airbag shutoff (⟶ page 137). ▶ If necessary, visit a qualified specialist workshop immediately.
PRE-SAFE inoperative See Owner's Manual	* The PRE-SAFE® functions are malfunctioning. ▶ Consult a qualified specialist workshop.
 Left window airbag malfunction Consult workshop	* The restraint system is malfunctioning (⟶ page 135). **WARNING** Risk of injury or fatal injury due to a malfunction in the windowbag The windowbag might be triggered unintentionally or might not be triggered at all in the event of an accident. ▶ Have the windowbag checked and repaired immediately at a qualified specialist workshop.

Display messages	Possible causes/consequences and ▶ Solutions
	▶ Consult a qualified specialist workshop immediately.
Right window airbag malfunction Consult workshop	* The restraint system is malfunctioning (⟶ page 135). ⚠ **WARNING** Risk of injury or fatal injury due to a malfunction in the windowbag The windowbag might be triggered unintentionally or might not be triggered at all in the event of an accident. ▶ Have the windowbag checked and repaired immediately at a qualified specialist workshop. ▶ Consult a qualified specialist workshop immediately.
Restraint system malfunction Consult workshop	* The restraint system is malfunctioning (⟶ page 135). ⚠ **WARNING** Risk of injury due to malfunctions in the restraint system Components in the restraint system may be activated unintentionally or not deploy as intended in an accident. ▶ Have the restraint system checked and repaired immediately at a qualified specialist workshop. **IDENTIFYING A RESTRAINT SYSTEM FAULT:** • The restraint system warning lamp does not light up when the vehicle is switched on. • The restraint system warning lamp lights up continuously or repeatedly during a journey. ▶ Consult a qualified specialist workshop immediately.

Display messages	Possible causes/consequences and ▶ Solutions
 Front left malfunction Consult workshop	* The restraint system is malfunctioning (⟶ page 135). **WARNING** Risk of injury due to malfunctions in the restraint system Components in the restraint system may be activated unintentionally or not deploy as intended in an accident. ▶ Have the restraint system checked and repaired immediately at a qualified specialist workshop. **IDENTIFYING A RESTRAINT SYSTEM FAULT:** • The restraint system warning lamp [ ] does not light up when the vehicle is switched on. • The restraint system warning lamp [ ] lights up continuously or repeatedly during a journey. ▶ Consult a qualified specialist workshop immediately.
 Front right malfunction Consult workshop	* The restraint system is malfunctioning (⟶ page 135). **WARNING** Risk of injury due to malfunctions in the restraint system Components in the restraint system may be activated unintentionally or not deploy as intended in an accident. ▶ Have the restraint system checked and repaired immediately at a qualified specialist workshop. **IDENTIFYING A RESTRAINT SYSTEM FAULT:** • The restraint system warning lamp [ ] does not light up when the vehicle is switched on. • The restraint system warning lamp [ ] lights up continuously or repeatedly during a journey. ▶ Consult a qualified specialist workshop immediately.

Display messages	Possible causes/consequences and ▶ Solutions
 Second row of seats, left Malfunction Consult workshop	* The restraint system is malfunctioning (⟶ page 135). **WARNING** Risk of injury due to malfunctions in the restraint system Components in the restraint system may be activated unintentionally or not deploy as intended in an accident. ▶ Have the restraint system checked and repaired immediately at a qualified specialist workshop. **WARNING** Risk of injury due to malfunction of the rear seat monitoring system If the restraint system of a rear seat is malfunctioning, the driver will be warned by a corresponding display message. In the event of a malfunction of the rear seat monitoring system, the restraint system of another rear seat may also be malfunctioning. ▶ Check the correct installation and the electrical connectors of all rear seats. ▶ If the malfunction of the restraint system of a seat in the second or third seat row persists, do not use any seat in either seat row. ▶ Have the restraint system and the rear seat monitoring system checked and repaired immediately at a qualified specialist workshop. **IDENTIFYING A RESTRAINT SYSTEM MALFUNCTION:** • The restraint system warning lamp does not light up when the vehicle is switched on. • The restraint system warning lamp lights up continuously or repeatedly during a journey.

Display messages	Possible causes/consequences and ▶ Solutions
	▶ Consult a qualified specialist workshop immediately.
Second row of seats, centre Malfunction Consult workshop	* The restraint system is malfunctioning (⟶ page 135).

WARNING
Risk of injury due to malfunctions in the restraint system

Components in the restraint system may be activated unintentionally or not deploy as intended in an accident.

▶ Have the restraint system checked and repaired immediately at a qualified specialist workshop.

WARNING
Risk of injury due to malfunction of the rear seat monitoring system

If the restraint system of a rear seat is malfunctioning, the driver will be warned by a corresponding display message.

In the event of a malfunction of the rear seat monitoring system, the restraint system of another rear seat may also be malfunctioning.

▶ Check the correct installation and the electrical connectors of all rear seats.

▶ If the malfunction of the restraint system of a seat in the second or third seat row persists, do not use any seat in either seat row.

▶ Have the restraint system and the rear seat monitoring system checked and repaired immediately at a qualified specialist workshop.

IDENTIFYING A RESTRAINT SYSTEM MALFUNCTION:

- The restraint system warning lamp does not light up when the vehicle is switched on.

Display messages	Possible causes/consequences and ▶ Solutions
	• The restraint system warning lamp lights up continuously or repeatedly during a journey. ▶ Consult a qualified specialist workshop immediately.
 Second row of seats, right Malfunction Consult workshop	* The restraint system is malfunctioning (⟶ page 135). **WARNING** Risk of injury due to malfunctions in the restraint system Components in the restraint system may be activated unintentionally or not deploy as intended in an accident. ▶ Have the restraint system checked and repaired immediately at a qualified specialist workshop. **WARNING** Risk of injury due to malfunction of the rear seat monitoring system If the restraint system of a rear seat is malfunctioning, the driver will be warned by a corresponding display message. In the event of a malfunction of the rear seat monitoring system, the restraint system of another rear seat may also be malfunctioning. ▶ Check the correct installation and the electrical connectors of all rear seats. ▶ If the malfunction of the restraint system of a seat in the second or third seat row persists, do not use any seat in either seat row. ▶ Have the restraint system and the rear seat monitoring system checked and repaired immediately at a qualified specialist workshop.

Display messages	Possible causes/consequences and ▶ Solutions
	IDENTIFYING A RESTRAINT SYSTEM MALFUNCTION: • The restraint system warning lamp does not light up when the vehicle is switched on. • The restraint system warning lamp lights up continuously or repeatedly during a journey. ▶ Consult a qualified specialist workshop immediately.
 3rd seat row, left Fault Consult workshop	* The restraint system is malfunctioning (⟶ page 135). **WARNING** Risk of injury due to malfunctions in the restraint system Components in the restraint system may be activated unintentionally or not deploy as intended in an accident. ▶ Have the restraint system checked and repaired immediately at a qualified specialist workshop.

Display messages	Possible causes/consequences and ▶ Solutions

WARNING
Risk of injury due to malfunction of the rear seat monitoring system

If the restraint system of a rear seat is malfunctioning, the driver will be warned by a corresponding display message.

In the event of a malfunction of the rear seat monitoring system, the restraint system of another rear seat may also be malfunctioning.

- ▶ Check the correct installation and the electrical connectors of all rear seats.
- ▶ If the malfunction of the restraint system of a seat in the second or third seat row persists, do not use any seat in either seat row.
- ▶ Have the restraint system and the rear seat monitoring system checked and repaired immediately at a qualified specialist workshop.

IDENTIFYING A RESTRAINT SYSTEM FAULT:

- The restraint system warning lamp does not light up when the vehicle is switched on.
- The restraint system warning lamp lights up continuously or repeatedly during a journey.

▶ Consult a qualified specialist workshop immediately.

Third row of seats, centre Malfunction
Consult workshop

* The restraint system is malfunctioning (⟶ page 135).

Display messages	Possible causes/consequences and ▶ Solutions

WARNING
Risk of injury due to malfunctions in the restraint system

Components in the restraint system may be activated unintentionally or not deploy as intended in an accident.

▶ Have the restraint system checked and repaired immediately at a qualified specialist workshop.

WARNING
Risk of injury due to malfunction of the rear seat monitoring system

If the restraint system of a rear seat is malfunctioning, the driver will be warned by a corresponding display message.

In the event of a malfunction of the rear seat monitoring system, the restraint system of another rear seat may also be malfunctioning.

▶ Check the correct installation and the electrical connectors of all rear seats.

▶ If the malfunction of the restraint system of a seat in the second or third seat row persists, do not use any seat in either seat row.

▶ Have the restraint system and the rear seat monitoring system checked and repaired immediately at a qualified specialist workshop.

IDENTIFYING A RESTRAINT SYSTEM MALFUNCTION:

- The restraint system warning lamp does not light up when the vehicle is switched on.
- The restraint system warning lamp lights up continuously or repeatedly during a journey.

▶ Consult a qualified specialist workshop immediately.

Display messages	Possible causes/consequences and ▶ Solutions
Third row of seats, right Malfunction Consult workshop	* The restraint system is malfunctioning (⟶ page 135).

WARNING
Risk of injury due to malfunctions in the restraint system

Components in the restraint system may be activated unintentionally or not deploy as intended in an accident.

- ▶ Have the restraint system checked and repaired immediately at a qualified specialist workshop.

WARNING
Risk of injury due to malfunction of the rear seat monitoring system

If the restraint system of a rear seat is malfunctioning, the driver will be warned by a corresponding display message.

In the event of a malfunction of the rear seat monitoring system, the restraint system of another rear seat may also be malfunctioning.

- ▶ Check the correct installation and the electrical connectors of all rear seats.
- ▶ If the malfunction of the restraint system of a seat in the second or third seat row persists, do not use any seat in either seat row.
- ▶ Have the restraint system and the rear seat monitoring system checked and repaired immediately at a qualified specialist workshop.

IDENTIFYING A RESTRAINT SYSTEM MALFUNCTION:

- The restraint system warning lamp does not light up when the vehicle is switched on.
- The restraint system warning lamp lights up continuously or repeatedly during a journey.

Display messages	Possible causes/consequences and ▶ Solutions
	▶ Consult a qualified specialist workshop immediately.
 2nd seat row, left Malfunction See Owner's Manual	* If incorrect installation or the electrical connection of a rear seat is the cause, you can rectify the fault yourself: ▶ Switch off the vehicle. ▶ With the vehicle switched off, check the correct installation (⟶ page 251) and the electrical connectors (⟶ page 238) of all rear seats. ▶ Switch on the vehicle. The display message will disappear automatically when the malfunction has been corrected. If the display message continues to be shown, the restraint system is malfunctioning (⟶ page 135) ⚠ **WARNING** Risk of injury due to malfunctions in the restraint system Components in the restraint system may be activated unintentionally or not deploy as intended in an accident. ▶ Have the restraint system checked and repaired immediately at a qualified specialist workshop.

Display messages	Possible causes/consequences and ▶ Solutions

WARNING
Risk of injury due to malfunction of the rear seat monitoring system

If the restraint system of a rear seat is malfunctioning, the driver will be warned by a corresponding display message.

In the event of a malfunction of the rear seat monitoring system, the restraint system of another rear seat may also be malfunctioning.

- ▶ Check the correct installation and the electrical connectors of all rear seats.
- ▶ If the malfunction of the restraint system of a seat in the second or third seat row persists, do not use any seat in either seat row.
- ▶ Have the restraint system and the rear seat monitoring system checked and repaired immediately at a qualified specialist workshop.

▶ Consult a qualified specialist workshop immediately.

IDENTIFYING A RESTRAINT SYSTEM MALFUNCTION:

- The restraint system warning lamp does not light up when the vehicle is switched on.
- The restraint system warning lamp lights up continuously or repeatedly during a journey.

2nd seat row, centre Malfunction See Owner's Manual

* If incorrect installation or the electrical connection of a rear seat is the cause, you can rectify the fault yourself:

▶ Switch off the vehicle.

▶ With the vehicle switched off, check the correct installation (⟶ page 251) and the electrical connectors (⟶ page 238) of all rear seats.

▶ Switch on the vehicle.
The display message will disappear automatically when the malfunction has been corrected.

If the display message continues to be shown, the restraint system is malfunctioning (⟶ page 135)

Display messages	Possible causes/consequences and ▶ Solutions

WARNING
Risk of injury due to malfunctions in the restraint system

Components in the restraint system may be activated unintentionally or not deploy as intended in an accident.

▶ Have the restraint system checked and repaired immediately at a qualified specialist workshop.

WARNING
Risk of injury due to malfunction of the rear seat monitoring system

If the restraint system of a rear seat is malfunctioning, the driver will be warned by a corresponding display message.

In the event of a malfunction of the rear seat monitoring system, the restraint system of another rear seat may also be malfunctioning.

▶ Check the correct installation and the electrical connectors of all rear seats.

▶ If the malfunction of the restraint system of a seat in the second or third seat row persists, do not use any seat in either seat row.

▶ Have the restraint system and the rear seat monitoring system checked and repaired immediately at a qualified specialist workshop.

▶ Consult a qualified specialist workshop immediately.

IDENTIFYING A RESTRAINT SYSTEM MALFUNCTION:

- The restraint system warning lamp does not light up when the vehicle is switched on.
- The restraint system warning lamp lights up continuously or repeatedly during a journey.

Display messages	Possible causes/consequences and ▶ Solutions
 2nd seat row, right Malfunction See Owner's Manual	* If incorrect installation or the electrical connection of a rear seat is the cause, you can rectify the fault yourself: ▶ Switch off the vehicle. ▶ With the vehicle switched off, check the correct installation (⟶ page 251) and the electrical connectors (⟶ page 238) of all rear seats. ▶ Switch on the vehicle. The display message will disappear automatically when the malfunction has been corrected. If the display message continues to be shown, the restraint system is malfunctioning (⟶ page 135) ⚠ **WARNING** Risk of injury due to malfunctions in the restraint system Components in the restraint system may be activated unintentionally or not deploy as intended in an accident. ▶ Have the restraint system checked and repaired immediately at a qualified specialist workshop.

Display messages	Possible causes/consequences and ▶ Solutions

WARNING
Risk of injury due to malfunction of the rear seat monitoring system

If the restraint system of a rear seat is malfunctioning, the driver will be warned by a corresponding display message.

In the event of a malfunction of the rear seat monitoring system, the restraint system of another rear seat may also be malfunctioning.

- ▶ Check the correct installation and the electrical connectors of all rear seats.
- ▶ If the malfunction of the restraint system of a seat in the second or third seat row persists, do not use any seat in either seat row.
- ▶ Have the restraint system and the rear seat monitoring system checked and repaired immediately at a qualified specialist workshop.

▶ Consult a qualified specialist workshop immediately.

IDENTIFYING A RESTRAINT SYSTEM MALFUNCTION:

- The restraint system warning lamp does not light up when the vehicle is switched on.
- The restraint system warning lamp lights up continuously or repeatedly during a journey.

3rd seat row, left Malfunction See Owner's Manual

* If incorrect installation or the electrical connection of a rear seat is the cause, you can rectify the fault yourself:

▶ Switch off the vehicle.

▶ With the vehicle switched off, check the correct installation (⟶ page 251) and the electrical connectors (⟶ page 238) of all rear seats.

▶ Switch on the vehicle.
The display message will disappear automatically when the malfunction has been corrected.

If the display message continues to be shown, the restraint system is malfunctioning (⟶ page 135)

Display messages	Possible causes/consequences and ▶ Solutions

WARNING
Risk of injury due to malfunctions in the restraint system

Components in the restraint system may be activated unintentionally or not deploy as intended in an accident.

▶ Have the restraint system checked and repaired immediately at a qualified specialist workshop.

WARNING
Risk of injury due to malfunction of the rear seat monitoring system

If the restraint system of a rear seat is malfunctioning, the driver will be warned by a corresponding display message.

In the event of a malfunction of the rear seat monitoring system, the restraint system of another rear seat may also be malfunctioning.

▶ Check the correct installation and the electrical connectors of all rear seats.

▶ If the malfunction of the restraint system of a seat in the second or third seat row persists, do not use any seat in either seat row.

▶ Have the restraint system and the rear seat monitoring system checked and repaired immediately at a qualified specialist workshop.

▶ Consult a qualified specialist workshop immediately.

IDENTIFYING A RESTRAINT SYSTEM MALFUNCTION:

- The restraint system warning lamp does not light up when the vehicle is switched on.
- The restraint system warning lamp lights up continuously or repeatedly during a journey.

Display messages	Possible causes/consequences and ▶ Solutions
 3rd seat row, centre Malfunction See Owner's Manual	* If incorrect installation or the electrical connection of a rear seat is the cause, you can rectify the fault yourself: ▶ Switch off the vehicle. ▶ With the vehicle switched off, check the correct installation (⟶ page 251) and the electrical connectors (⟶ page 238) of all rear seats. ▶ Switch on the vehicle. The display message will disappear automatically when the malfunction has been corrected. If the display message continues to be shown, the restraint system is malfunctioning (⟶ page 135) ⚠ **WARNING** Risk of injury due to malfunctions in the restraint system Components in the restraint system may be activated unintentionally or not deploy as intended in an accident. ▶ Have the restraint system checked and repaired immediately at a qualified specialist workshop.

Display messages	Possible causes/consequences and ▶ Solutions

WARNING
Risk of injury due to malfunction of the rear seat monitoring system

If the restraint system of a rear seat is malfunctioning, the driver will be warned by a corresponding display message.

In the event of a malfunction of the rear seat monitoring system, the restraint system of another rear seat may also be malfunctioning.

- ▶ Check the correct installation and the electrical connectors of all rear seats.
- ▶ If the malfunction of the restraint system of a seat in the second or third seat row persists, do not use any seat in either seat row.
- ▶ Have the restraint system and the rear seat monitoring system checked and repaired immediately at a qualified specialist workshop.

▶ Consult a qualified specialist workshop immediately.

IDENTIFYING A RESTRAINT SYSTEM MALFUNCTION:

- The restraint system warning lamp does not light up when the vehicle is switched on.
- The restraint system warning lamp lights up continuously or repeatedly during a journey.

3rd seat row, right Malfunction See Owner's Manual

* If incorrect installation or the electrical connection of a rear seat is the cause, you can rectify the fault yourself:

▶ Switch off the vehicle.

▶ With the vehicle switched off, check the correct installation (⟶ page 251) and the electrical connectors (⟶ page 238) of all rear seats.

▶ Switch on the vehicle.
The display message will disappear automatically when the malfunction has been corrected.

If the display message continues to be shown, the restraint system is malfunctioning (⟶ page 135)

Display messages	Possible causes/consequences and ▶ Solutions

WARNING
Risk of injury due to malfunctions in the restraint system

Components in the restraint system may be activated unintentionally or not deploy as intended in an accident.

▶ Have the restraint system checked and repaired immediately at a qualified specialist workshop.

WARNING
Risk of injury due to malfunction of the rear seat monitoring system

If the restraint system of a rear seat is malfunctioning, the driver will be warned by a corresponding display message.

In the event of a malfunction of the rear seat monitoring system, the restraint system of another rear seat may also be malfunctioning.

▶ Check the correct installation and the electrical connectors of all rear seats.

▶ If the malfunction of the restraint system of a seat in the second or third seat row persists, do not use any seat in either seat row.

▶ Have the restraint system and the rear seat monitoring system checked and repaired immediately at a qualified specialist workshop.

▶ Consult a qualified specialist workshop immediately.

IDENTIFYING A RESTRAINT SYSTEM MALFUNCTION:

- The restraint system warning lamp does not light up when the vehicle is switched on.
- The restraint system warning lamp lights up continuously or repeatedly during a journey.

Display messages	Possible causes/consequences and ▶ Solutions
2nd seat row, left Check electrical connection See Owner's Manual	* The electrical connector of a rear seat is malfunctioning. ▶ With the vehicle switched off, check the correct installation (⟶ page 251) and the electrical connectors (⟶ page 238) of all rear seats. ▶ Switch on the vehicle. The display message will disappear automatically when the malfunction has been corrected. If the display message continues to be shown: ▶ Consult a qualified specialist workshop immediately.
2nd seat row, right Check electrical connection See Owner's Manual	* The electrical connector of a rear seat is malfunctioning. ▶ With the vehicle switched off, check the correct installation (⟶ page 251) and the electrical connectors (⟶ page 238) of all rear seats. ▶ Switch on the vehicle. The display message will disappear automatically when the malfunction has been corrected. If the display message continues to be shown: ▶ Consult a qualified specialist workshop immediately.
3rd seat row, left Check electrical connection See Owner's Manual	* The electrical connector of a rear seat is malfunctioning. ▶ With the vehicle switched off, check the correct installation (⟶ page 251) and the electrical connectors (⟶ page 238) of all rear seats. ▶ Switch on the vehicle. The display message will disappear automatically when the malfunction has been corrected. If the display message continues to be shown: ▶ Consult a qualified specialist workshop immediately.

Display messages	Possible causes/consequences and ▶ Solutions
3rd seat row, right Check electrical connection See Owner's Manual	* The electrical connector of a rear seat is malfunctioning. ▶ With the vehicle switched off, check the correct installation (⟶ page 251) and the electrical connectors (⟶ page 238) of all rear seats. ▶ Switch on the vehicle. The display message will disappear automatically when the malfunction has been corrected. If the display message continues to be shown: ▶ Consult a qualified specialist workshop immediately.
Rear seat monitoring restricted See Owner's Manual	* The radio transmission of rear seat monitoring is impaired for one of the following reasons: • Load inside the vehicle • Source of radio interference • Defective antenna The rear seat monitoring function is restricted. ▶ With the vehicle switched off, check the correct installation (⟶ page 251) and the electrical connectors (⟶ page 238) of all rear seats. ▶ Drive on. As soon as the cause is eliminated, rear seat monitoring will be available again. If the display message is shown permanently: ▶ Consult a qualified specialist workshop.
Rear seat monitoring currently unavailable See Owner's Manual	* A component of the rear seat monitoring is malfunctioning. Rear seat monitoring is not available. ▶ Consult a qualified specialist workshop immediately.

Display messages	Possible causes/consequences and ▶ Solutions
2nd seat row, left Battery low	* The battery for the rear seat monitoring system in the corresponding rear seat is weak. ▶ Consult a qualified specialist workshop.
2nd seat row, right Battery low	* The battery for the rear seat monitoring system in the corresponding rear seat is weak. ▶ Consult a qualified specialist workshop.
3rd seat row, left Battery low	* The battery for the rear seat monitoring system in the corresponding rear seat is weak. ▶ Consult a qualified specialist workshop.
3rd seat row, right Battery low	* The battery for the rear seat monitoring system in the corresponding rear seat is weak. ▶ Consult a qualified specialist workshop.

Driving and driving safety systems

Display messages	Possible causes/consequences and ▶ Solutions
inoperative See Owner's Manual	* ABS and ESP® are malfunctioning. Other driving systems and driving safety systems (e.g. BAS) may also be malfunctioning. The brake system continues working with the normal effect. Braking distance may increase in an emergency braking situation.

Display messages	Possible causes/consequences and ▶ Solutions
	WARNING Risk of skidding if ABS and ESP® are malfunctioning The wheels may block during braking and ESP® does not perform any vehicle stabilization. The steerability and braking characteristics are heavily impaired and the braking distance may increase. In addition, other driving safety systems are switched off. ▶ Drive on carefully. ▶ Have ABS and ESP® checked immediately at a qualified specialist workshop. ▶ Drive on carefully. ▶ Have ABS and ESP® checked immediately at a qualified specialist workshop.
 currently unavailable See Owner's Manual	* ABS and ESP® are temporarily unavailable. Other driving systems and driving safety systems (e.g. BAS) may also be temporarily unavailable. The brake system continues working with the normal effect. Braking distance may increase in an emergency braking situation.

Display messages	Possible causes/consequences and ▶ Solutions
	WARNING Risk of skidding if ABS and ESP® are malfunctioning The wheels may lock during braking and ESP® does not perform any vehicle stabilisation. The steerability and braking characteristics are heavily impaired and the braking distance may increase. In addition, other driving safety systems are switched off. ▶ Drive carefully on a suitable stretch of road, making slight steering movements at a speed above 30 km/h. ▶ If the display message does not disappear, consult a qualified specialist workshop immediately. Drive carefully. ▶ Carefully drive some gentle curves at a speed greater than 30 km/h on a suitable stretch of road. ▶ If the display message does not disappear, consult a qualified specialist workshop immediately. Drive carefully when doing so.
 inoperative See Owner's Manual	* ESP® is malfunctioning Other driving systems and driving safety systems (e.g. BAS) may also be malfunctioning. The brake system continues working with the normal effect. Braking distance may increase in an emergency braking situation. **WARNING** Risk of skidding if ESP® is malfunctioning If ESP® is malfunctioning, ESP® cannot carry out vehicle stabilisation. In addition, other driving safety systems are switched off. ▶ Drive on carefully. ▶ Have ESP® checked at a qualified specialist workshop.

Display messages	Possible causes/consequences and ▶ Solutions
	▶ Drive on carefully. ▶ Have ESP® checked at a qualified specialist workshop.
 currently unavailable See Owner's Manual	* ESP® is temporarily unavailable. Other driving systems and driving safety systems may also be malfunctioning. **WARNING** Risk of skidding with faulty ESP® If ESP® is not available, ESP® will be unable to perform any stabilisation of the vehicle. In addition, other driving safety systems are switched off. ▶ Carefully navigate a few gentle bends at a speed greater than 30 km/h on a suitable stretch of road. ▶ If the display message does not disappear, consult a qualified specialist workshop immediately. Ensure the utmost of care if you continue to drive the vehicle to this end. ▶ Carefully navigate a few gentle bends at a speed greater than 30 km/h on a suitable stretch of road. ▶ If the display message does not disappear, consult a qualified specialist workshop immediately. Ensure the utmost of care if you continue to drive the vehicle to this end.
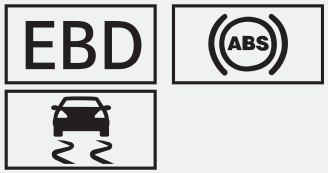 inoperative See Owner's Manual	* EBD is unavailable due to a malfunction. This means that ABS, BAS, Hill Start Assist and ESP® as well as its driving safety systems, forexample, are also unavailable. ATTENTION ASSIST is deactivated and other driving systems could be automatically deactivated. The brake system continues to function normally, but without the functions listed above.

Display messages	Possible causes/consequences and ▶ Solutions
	WARNING Risk of skidding if EBD, ABS and ESP® are malfunctioning The wheels may block during braking and ESP® does not perform any vehicle stabilization. The steerability and braking characteristics are heavily impaired and the braking distance may increase. In addition, other driving safety systems are switched off. ▶ Drive on carefully. ▶ Have the brake system checked immediately at a qualified specialist workshop. ▶ Continue driving with caution. ▶ Have the brake system checked at a qualified specialist workshop immediately.
120 km/h Maximum speed exceeded	* For certain countries only: the maximum permissible speed has been exceeded. ▶ Drive more slowly.
Speed limit (winter tyres) XXX km/h	* You have reached the maximum permissible stored speed for winter tyres. It is not possible to exceed this speed.
 Remain alert! (white display message)	* ATTENTION ASSIST has detected that the driver is averting their gaze from traffic events (⟶ page 403). A warning tone also sounds. ▶ Focus on the traffic events again.
 ATTENTION ASSIST: Take a break!	* Based on certain criteria, ATTENTION ASSIST has detected fatigue or increasing lapses in concentration on the part of the driver. A warning tone also sounds. ▶ If necessary, take a break. On long journeys, take regular and timely breaks that allow you to rest properly.

Display messages	Possible causes/consequences and ▶ Solutions
ATTENTION ASSIST inoperative	* ATTENTION ASSIST has failed. ▶ Consult a qualified specialist workshop.
The camera's view of the driver is currently impeded Affected functions: see Owner's Manual	* **THE VIEW OF THE DRIVER CAMERA IS REDUCED. POSSIBLE CAUSES:** • Objects or stickers are projecting into the driver camera's field of vision. • The driver camera is dirty. ▶ Keep the driver camera's field of vision free. ▶ Clean the driver camera if necessary. Please comply with the notes on caring for the interior relating to the display (⟶ page 656).
Driver camera inoperative See Owner's Manual	* The driver camera is malfunctioning. ▶ Consult a qualified specialist workshop.
LIM - - - km/h	* The limiter can temporarily not be engaged. When the causes have been eliminated, the system will be available again.
LIM passive	* If you depress the accelerator pedal beyond the point of resistance (kickdown), the limiter will be switched to passive (⟶ page 406).
Limiter inoperative	* The limiter is malfunctioning. ▶ Consult a qualified specialist workshop.
- - - km/h	* Cruise control cannot be activated as not all activation conditions have been met. ▶ Observe the activation conditions for cruise control (⟶ page 407).

Display messages	Possible causes/consequences and ▶ Solutions
Cruise control inoperative	* Cruise control is malfunctioning. ▶ Consult a qualified specialist workshop.
Cruise control and Limiter inoperative	* Cruise control and the limiter are malfunctioning. ▶ Consult a qualified specialist workshop.
DSR — km/h	* DSR is switched on, but is not active as you are driving faster than 18 km/h. If you drive at a speed below 18 km/h, DSR will automatically brake again to the set speed.
DSR off	* DSR was deactivated. If it was not deactivated by the driver, e.g. due to a malfunction in the ESP®, a warning tone will also sound.
DSR inoperative	* A warning tone also sounds. DSR is unavailable due to a malfunction. ▶ Consult a qualified specialist workshop.
HOLD Off	* The HOLD function has been deactivated. The vehicle has started skidding. A warning tone also sounds. ▶ Switch the HOLD function on again later (⟶ page 401). * The HOLD function has been deactivated. An activation condition will no longer be met when the brake pedal is depressed. A warning tone also sounds. ▶ Check the activation conditions of the HOLD function (⟶ page 401).
Speed Limit Assist inoperative	* Speed Limit Assist is malfunctioning. ▶ Continue driving.

Display messages	Possible causes/consequences and ▶ Solutions
	or ▶ Stop the vehicle in accordance with the traffic conditions and restart the vehicle. ▶ If the display message does not disappear, consult a qualified specialist workshop.
Speed Limit Assist currently unavailable See Owner's Manual	* Speed Limit Assist is temporarily unavailable. ▶ Continue driving. The system will become available again as soon as the causes have been eliminated.
Traffic Sign Assist inoperative	* Traffic Sign Assist is malfunctioning. ▶ Consult a qualified specialist workshop.
Traffic Sign Assist currently unavailable See Owner's Manual	* Traffic Sign Assist has been switched off and is temporarily inoperative. **THIS MAY BE DUE TO THE FOLLOWING CAUSES:** • The windscreen is dirty in the camera's field of vision. • Visibility is impaired due to heavy rain, snow or fog. If the causes mentioned above no longer apply, the display message will disappear and Traffic Sign Assist will be operational once again. If the display message does not disappear: ▶ Stop in accordance with the traffic conditions. ▶ Secure the vehicle against rolling away. ▶ Clean the windscreen.
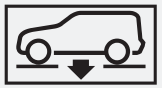 Lowering	* **THE VEHICLE LEVEL MAY BE LOWERED FOR THE FOLLOWING REASONS:** • You have selected a different drive program. • You have exceeded the speed limit.

Display messages	Possible causes/consequences and ▶ Solutions
Rising	* **THE VEHICLE LEVEL MAY BE RAISED FOR THE FOLLOWING REASONS:** • You have selected a different drive program. • You have fallen below the speed limit.
Compressor is cooling	* Due to frequent level changes within a short space of time, the compressor first needs to cool down to enable the selected driving level to be set. When the compressor has cooled down, the vehicle will continue rising to the selected vehicle level. ▶ Drive on in a manner appropriate for the current level. Make sure that there is sufficient ground clearance.
Malfunction Maximum speed 80 km/h	* AIRMATIC is functioning only to a limited extent. The vehicle's handling characteristics may be affected. **NOTE** The tyres on the front axle or the fenders could be damaged by large steering movements ▶ Avoid large steering movements while driving and listen for scraping sounds. ▶ If you hear scraping sounds, pull over and stop the vehicle in accordance with the traffic conditions, and set a higher vehicle level if possible. ▶ Drive in a manner appropriate for the current level, but do not exceed 80 km/h. ▶ Consult a qualified specialist workshop.

Driver assistance systems

Display messages	Possible causes/consequences and ▶ Solutions
temporarily unavailable Sensors dirty	* **FRONT AND CORNER RADARS (SUBSEQUENTLY REFERRED TO AS "SENSORS") ARE MALFUNCTIONING. POSSIBLE CAUSES:** • the sensors are dirty • heavy precipitation • extended country driving without other traffic, e.g.in the desert Driving systems and driving safety systems may be malfunctioning or temporarily unavailable. The brake system, steering and drive system will continue to function normally. ▶ Continue driving with caution. Once the causes of the problem have been rectified, the driving systems and driving safety systems will be available once again, and the corresponding symbols will be switched off. If the display message does not disappear: ▶ Stop in accordance with the traffic conditions. ▶ Clean all sensor covers from the outside (⟶ page 391). ▶ Restart the vehicle.

Display messages	Possible causes/consequences and ▶ Solutions
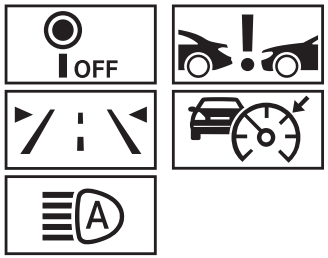 Camera view restricted See Owner's Manual	* **THE VIEW OF THE MULTIFUNCTION CAMERA IS RESTRICTED. POSSIBLE CAUSES:** • Dirt on the windscreen in the field of vision of the multifunction camera • Heavy precipitation or fog • Mist on the inside or outside of the windscreen: in certain weather conditions, mist can form on the inside or outside of the windscreen during cold times of the year in particular. ⓘ This mist on the windscreen will be removed automatically within a short time with the aid of a heater. The restriction is temporary. Driving systems and driving safety systems may be malfunctioning or temporarily unavailable. The brake system, steering and drive system will continue to function normally. ▶ Continue driving with caution. ▶ To remove the mist from the outside, wipe once (⟶ page 309). ▶ To remove the mist from the inside, press (⟶ page 325). Once the causes of the problem have been rectified, the driving systems and driving safety systems will be available once again, and the corresponding symbols will be switched off. If the display message does not disappear, even after a driving time of about 15 minutes: ▶ Stop in accordance with the traffic conditions. ▶ Clean the windscreen, especially in the position of the multifunction camera (⟶ page 391). ▶ Restart the vehicle.
Restricted during trailer operation	* When the trailer socket is occupied, some driving systems will be available only to a limited extent. ▶ Drive with particular caution if you are towing a trailer or the bicycle rack is mounted.

Display messages	Possible causes/consequences and ▶ Solutions
 - - - km/h	* Active Distance Assist DISTRONIC cannot be activated because not all activation conditions are fulfilled. ▶ Observe the activation conditions for Active Distance Assist DISTRONIC (⟶ page 409).
 suspended	* You are accelerating. Active Distance Assist DISTRONIC does not intervene for the duration of the acceleration process. ▶ Remove your foot from the accelerator pedal. Active Distance Assist DISTRONIC will be activated again.
 Off	* Active Distance Assist DISTRONIC was deactivated. If a warning tone also sounds, Active Distance Assist DISTRONIC has deactivated automatically (⟶ page 409).
Active Distance Assist inoperative	* Active Distance Assist DISTRONIC is malfunctioning. Other driving systems and driving safety systems may also be malfunctioning. ▶ Continue driving with caution. or ▶ Stop the vehicle in accordance with the traffic conditions and restart the vehicle. ▶ If the display message does not disappear, consult a qualified specialist workshop.
Active Distance Assist currently unavailable See Owner's Manual	* A warning tone also sounds. Active Distance Assist DISTRONIC has been switched off and is temporarily inoperative. **THIS MAY BE DUE TO THE FOLLOWING CAUSES:** • The function is impaired due to heavy rain or snow. • The radar sensor system is temporarily inoperative, e.g. due to electromagnetic radiation close to TV or radio transmitting stations or other sources of radiation. • The system is outside the operating temperature range.

Display messages	Possible causes/consequences and ▶ Solutions
	• The on-board electrical system voltage is too low. If the causes mentioned above no longer apply, the display message will disappear and Active Distance Assist DISTRONIC will become operational once again. If the display message does not disappear: ▶ Stop in accordance with the traffic conditions. ▶ Secure the vehicle against rolling away. ▶ Restart the vehicle.
Active Distance Assist available again	* Active Distance Assist DISTRONIC is operational again after being temporarily unavailable. You can now switch Active Distance Assist DISTRONIC on again (⟶ page 413).
Blind Spot Assist and exit warning currently unavailable See Owner's Manual	* Blind Spot Assist is temporarily non-operational. **THIS MAY BE DUE TO THE FOLLOWING CAUSES:** • The sensors in the rear bumper are dirty. • The function is impaired due to heavy rain or snow. • The radar sensor system is temporarily non-operational, e.g. due to electromagnetic radiation close to TV or radio transmitting stations or other sources of radiation. • The system is outside the operating temperature range. If the causes mentioned above no longer apply, the display message will disappear and Blind Spot Assist will become operational once again. If the display message does not disappear: ▶ Stop in accordance with the traffic conditions. ▶ Secure the vehicle against rolling away. ▶ Switch off the vehicle. ▶ Clean the sensors in the rear bumper (⟶ page 653).

Display messages	Possible causes/consequences and ▶ Solutions
	▶ Restart the vehicle.
Blind Spot Assist and exit warning inoperative	* Blind Spot Assist is malfunctioning. ▶ Consult a qualified specialist workshop.
Active Lane Keeping Assist functions restricted See Owner's Manual	* Active Lane Keeping Assist is available but restricted. ▶ Drive on. or ▶ Stop the vehicle in accordance with the traffic conditions and restart the vehicle. ▶ If the display message does not disappear: consult a qualified specialist workshop.
Active Lane Keeping Assist currently unavailable See Owner's Manual	* Active Lane Keeping Assist is temporarily unavailable. **THIS MAY BE DUE TO THE FOLLOWING CAUSES:** • The windscreen is dirty in the camera's field of vision. • Visibility is impaired due to heavy rain, snow or fog. • Lane markings are absent for a long period of time. • The lane markings are worn, dark or covered by dirt or snow, forexample. If the causes mentioned above no longer apply, the display message will disappear and Active Lane Keeping Assist will be operational again. If the display message does not disappear: ▶ Stop in accordance with the traffic conditions. ▶ Secure the vehicle against rolling away. ▶ Clean the windscreen.
Active Lane Keeping Assist inoperative	* Active Lane Keeping Assist is malfunctioning .

Display messages	Possible causes/consequences and ▶ Solutions
	▶ Drive on. or ▶ Stop the vehicle in accordance with the traffic conditions and restart the vehicle. ▶ If the display message does not disappear: consult a qualified specialist workshop.
Active Steering Assist currently unavailable See Owner's Manual	* Active Steering Assist is temporarily unavailable. The ambient conditions are outside the system limits (⟶ page 421). When the ambient conditions are within the system limits, the system will be available again. ▶ Continue driving. ▶ Check the tyre pressure if necessary.
	* Active Steering Assist has reached the system limits (⟶ page 421). You have not steered independently for a considerable period of time. ▶ Take over the steering and continue driving in accordance with the traffic conditions.
 Beginning emergency stop	* Your hands are not on the steering wheel. An emergency stop is initiated (⟶ page 421). ▶ Perform a deliberate steering movement. ▶ Accelerating or braking. Information on cancelling an emergency stop (⟶ page 423).
Active Steering Assist currently unavailable due to multiple emergency stops	* Active Steering Assist is temporarily unavailable due to multiple emergency stops. ▶ Take over the steering and stop in accordance with the traffic conditions. ▶ Switch the vehicle off and back on again. Active Steering Assist is available once more.

Display messages	Possible causes/consequences and ▶ Solutions
Active Steering Assist inoperative	* Active Steering Assist is malfunctioning. Active Distance Assist DISTRONIC remains available. ▶ Continue driving. or ▶ Stop the vehicle in accordance with the traffic conditions and restart the vehicle. ▶ If the display message does not disappear, consult a qualified specialist workshop.
Active Brake Assist Functions currently limited See Owner's Manual	* Active Brake Assist and Active Avoidance Assist may be temporarily unavailable or only partially available. **THIS MAY BE DUE TO THE FOLLOWING CAUSES:** • The sensors in the front bumper are dirty. • The area of the windscreen where the camera is located is dirty. • The function is impaired due to heavy rain or snow. • The radar sensor system is temporarily non-operational, e.g. due to electromagnetic radiation close to TV or radio transmitting stations or other sources of radiation. • The system is outside the operating temperature range. • The on-board electrical system voltage is too low. If the causes mentioned above no longer apply, the display message will disappear. Active Brake Assist and Active Avoidance Assist will be operational again. If the display message does not disappear: ▶ Stop in accordance with the traffic conditions. ▶ Secure the vehicle against rolling away. ▶ Switch off the vehicle. ▶ Clean the area of the windscreen where the camera is located (⟶ page 653). ▶ Clean the sensors in the front bumper (⟶ page 653). ▶ Start the vehicle again.

Display messages	Possible causes/consequences and ▶ Solutions
Active Brake Assist Functions limited See Owner's Manual	* Active Brake Assist and Active Avoidance Assist may be temporarily unavailable or only partially available. ▶ Continue driving with caution. or ▶ Stop the vehicle in accordance with the traffic conditions and restart the vehicle. ▶ If the display message does not disappear, consult a qualified specialist workshop.

Parking assistance systems

Display messages	Possible causes/consequences and ▶ Solutions
PARKTRONIC inoperative See Owner's Manual	* Parking Assist PARKTRONIC is malfunctioning. When the causes have been eliminated, the system will be available again. ▶ Continue driving while paying attention to the vehicle's surroundings. or ▶ Stop the vehicle in accordance with the traffic conditions and restart the vehicle. ▶ If the display message still appears, consult a qualified specialist workshop.
Active Parking Assist Parking cancel-led (example)	* An acoustic signal also sounds. The active parking assistance systems have been cancelled and Active Parking Assist will automatically be aborted. You have touched the steering wheel, forexample, or have driven at too high a speed. ▶ Steer and brake manually. ▶ Repeat the parking procedure if necessary. Take the deactivation conditions into account in the process (⟶ page 448).
Active Parking Assist and PARKTRONIC inoperative See Owner's Manual	* PARKTRONIC is malfunctioning or defective. ▶ Comply with the instructions and aids in "Function of PARKTRONIC" (⟶ page 458, 445).

Display messages	Possible causes/consequences and ▶ Solutions
	▶ If the display message continues to be displayed, consult a qualified specialist workshop. * Active Parking Assist is not available or is malfunctioning. ▶ Stop the vehicle in accordance with the traffic conditions and restart the vehicle. If the display message continues to be displayed, or if the display does not show the symbol P: ▶ Consult a qualified specialist workshop.

Climate control

Display messages	Possible causes/consequences and ▶ Solutions
Air conditioning system fault See Owner's Manual	* The function of the climate control system is temporarily restricted. The quantity of air and flow of fresh air are controlled automatically. ▶ Have the climate control system checked at a qualified specialist workshop.
 Currently unavailable Battery low	* The on-board electrical system voltage is too low. The hot-water auxiliary heating (stationary heater) has switched itself off or cannot be switched on. ▶ Drive a lengthy distance. The battery will be charged. The hot-water auxiliary heating (stationary heater) will be operational again as soon as the on-board electrical system voltage is sufficient.
 Currently unavailable Refuel	* There is too little fuel in the fuel tank. The hot-water auxiliary heater (stationary heater) cannot be switched on. ▶ Refuel the vehicle.
 inoperative See Owner's Man.	* The hot-water auxiliary heater (stationary heater) is malfunctioning. ▶ When the vehicle is stationary on a level surface and the engine has cooled down, make up to four attempts to switch on the hot-water auxiliary heater (stationary heater), waiting several minutes between attempts (⟶ page 61). If the hot-water auxiliary heater (stationary heater) does not switch on:

Display messages	Possible causes/consequences and ▶ Solutions
	▶ Consult a qualified specialist workshop.

Engine

Display messages	Possible causes/consequences and ▶ Solutions
 Top up coolant See Owner's Manual	* The coolant level is too low. **NOTE** Engine damage due to insufficient coolant ▶ Avoid long journeys with insufficient coolant. ▶ Top up with coolant, following the notes on coolant (⟶ page 644). If you frequently need to top up the coolant: ▶ Have the engine cooling system checked at a qualified specialist workshop.
 Urgently top up coolant See Owner's Manual	* The coolant level is too low. **NOTE** Engine damage due to insufficient coolant ▶ Avoid long journeys with insufficient coolant. ▶ Immediately top up with coolant, following the notes on coolant (⟶ page 644). If you frequently need to top up the coolant:

Display messages	Possible causes/consequences and ▶ Solutions
	▶ Have the engine cooling system checked at a qualified specialist workshop.
	* The fan motor is defective. ▶ Check the coolant temperature display on the driver display. If the coolant temperature is below 120°C, you can continue driving to the nearest qualified specialist workshop. Avoid high engine loads, e.g.driving in mountainous terrain or stop-and-go driving.
Replace air filter	* The engine air filter is dirty and must be replaced. ▶ Consult a qualified specialist workshop.
Diesel particulate filter Drive at high engine speeds See Owner's Manual	* Automatic regeneration of the diesel particulate filter is not sufficient or is malfunctioning. ▶ Drive at an engine speed above 2000 rpm until the display message disappears. If the display message does not go out after approximately 20 minutes, have the malfunction rectified immediately at a qualified specialist workshop.
Add 1 litre engine oil when next refuelling	* The engine oil level has dropped to the minimum level. **NOTE** Engine damage caused by driving with insufficient engine oil ▶ Avoid long journeys with insufficient engine oil. ▶ Check the oil level at the next refuelling stop (⟶ page 37). ▶ If necessary, top up the engine oil (⟶ page 642). If engine oil frequently needs to be topped up: ▶ Have the engine checked at a qualified specialist workshop.

Display messages	Possible causes/consequences and ▶ Solutions
Check engine oil level when next refuelling	* A warning tone also sounds. The oil level in your vehicle has fallen to the minimum. **NOTE** Engine damage caused by driving with insufficient engine oil ▶ Avoid long journeys with insufficient engine oil. ▶ Check the oil level when next refuelling, at the latest (⟶ page 37). ▶ If necessary, top up the engine oil (⟶ page 642). If engine oil frequently needs to be topped up: ▶ Have the engine checked at a qualified specialist workshop.
Engine oil level Stop Switch off the vehicle	* The oil level is too low. There is a risk of engine damage. ▶ Stop the vehicle immediately in accordance with the traffic conditions and switch it off. ▶ Secure the vehicle against rolling away. ▶ Check the oil level (⟶ page 37). ▶ If necessary, top up the engine oil (⟶ page 642).
Engine oil pressure Stop Switch off the vehicle	* The oil pressure is too low. **NOTE** Engine damage caused by driving with insufficient oil pressure ▶ Avoid driving with insufficient oil pressure. ▶ Stop the vehicle immediately in accordance with the traffic conditions. Do not continue driving!

Display messages	Possible causes/consequences and ▶ Solutions
	▶ Switch off the vehicle. ▶ Contact a qualified specialist workshop.
 Engine oil level cannot be measured	* The electrical connection to the oil level sensor has been interrupted or the oil level sensor is faulty. ▶ Consult a qualified specialist workshop.
 Engine oil level Reduce oil level	* The engine oil level is too high. **NOTE** Engine damage caused by driving with excess engine oil ▶ Avoid long journeys with excess engine oil. ▶ Consult a qualified specialist workshop immediately and have the engine oil level reduced.
	* There is very little fuel in the fuel tank. ▶ It is absolutely essential to refuel at the nearest filling station.
 Clean the fuel filter	* There is water in the fuel filter. The water must be drained off. ▶ Consult a qualified specialist workshop.

AdBlue®

Display messages	Possible causes/consequences and ▶ Solutions
Refill AdBlue See Owner's Manual	* A warning tone also sounds. The AdBlue® level has fallen into the reserve range. ▶ Top up with AdBlue® as soon as possible (⟶ page 30).
Top up AdBlue Emergency op. in XXX km See Owner's Manual	* A warning tone also sounds. The AdBlue® reserve is sufficient only for the distance displayed. If you subsequently start the engine again, you will be able to drive the vehicle only at a maximum speed of 20 km/h for the distance shown. After that, engine management will prevent the engine from starting. ▶ Top up with AdBlue® immediately (⟶ page 30).
Top up AdBlue XX,X l Emerg. op.: max. XXX km/h Start not poss. in XXX km	* The AdBlue® reserve is sufficient only for the distance displayed. You may continue to drive the displayed distance at a maximum speed of 20 km/h. If you subsequently switch off the engine, the engine management system will prevent the engine from being started again. ▶ Top up AdBlue® immediately (⟶ page 30).
AdBlue system fault See Owner's Manual	* A warning tone also sounds. The AdBlue® system is malfunctioning. ▶ Consult a qualified specialist workshop immediately.
AdBlue system fault Emergency op. in XXX km See Owner's Manual	* The AdBlue® system is malfunctioning. Performance will be reduced once the remaining distance displayed has been covered. ▶ Consult a qualified specialist workshop immediately.
AdBlue system fault Emerg. op.: max. XXX km/h Start not poss. in XXX km	* A warning tone also sounds. The AdBlue® system is malfunctioning. You may continue to drive the displayed distance at a maximum speed of 20 km/h. If you subsequently switch off the engine, the engine management system will prevent the engine from being started again. ▶ Continue driving to a qualified specialist workshop.

Display messages	Possible causes/consequences and ▶ Solutions
	or ▶ Stop the vehicle in accordance with the traffic conditions and consult a qualified specialist workshop.
AdBlue system fault Start not possible See Owner's Manual	* A warning tone also sounds. The AdBlue® system is malfunctioning. You can no longer start the engine. ▶ Notify a qualified specialist workshop immediately.

Brakes

Display messages	Possible causes/consequences and ▶ Solutions
Check brake pads See Owner's Manual	* The brakepads have reached their wear limit. **WARNING** Risk of accident due to restricted braking power When the brake pads have reached their wear limit, the braking power may be restricted. ▶ Drive on carefully. ▶ Have the brake system checked immediately at a qualified specialist workshop. ▶ Consult a qualified specialist workshop.
Check brake fluid level	* There is insufficient brake fluid in the brake fluid reservoir.

Display messages	Possible causes/consequences and ▶ Solutions
	WARNING Risk of an accident due to low brake fluid level If the brake fluid level is too low, the braking effect and the braking characteristics may be impaired. ▶ Stop the vehicle as soon as possible, paying attention to road and traffic conditions. Do not continue driving. ▶ Consult a qualified specialist workshop. ▶ Do not top up the brake fluid. ▶ Stop the vehicle immediately in accordance with the traffic conditions. Do not continue driving! ▶ Contact a qualified specialist workshop. ▶ Do not top up the brake fluid.
Parking brake Switch on vehicle to release	* The red indicator lamp (P) is lit. You have attempted to release the electric parking brake with the vehicle switched off. ▶ Switch on the vehicle.
Parking brake See Owner's Manual	* The yellow (P) indicator lamp is lit. The electric parking brake is malfunctioning. **To apply:** ▶ Switch the vehicle off and back on again. ▶ Apply the electric parking brake manually (⟶ page 387). If it is not possible to apply the electric parking brake: ▶ Consult a qualified specialist workshop.

Display messages	Possible causes/consequences and ▶ Solutions
	▶ Where necessary, also secure the parked vehicle against rolling away. * The yellow [(P)] and red [(P)] indicator lamps are lit. The electric parking brake is malfunctioning. **To release:** ▶ Switch the vehicle off and back on again. ▶ Release the electric parking brake manually (⟶ page 387). or ▶ Release the electric parking brake automatically (⟶ page 386). If it is still not possible to release the electric parking brake: ▶ Do not continue driving! Contact a qualified specialist workshop. * The yellow [(P)] indicator lamp is lit, and the red [(P)] indicator lamp is flashing. The electric parking brake is malfunctioning. The electric parking brake could not be applied or released. ▶ Switch the vehicle off and back on again. **To apply:** ▶ Release and then apply the electric parking brake manually (⟶ page 387). **To release:** ▶ Apply and then release the electric parking brake manually. If it is not possible to apply the electric parking brake or the red [(P)] indicator lamp continues to flash: ▶ Do not continue driving! Contact a qualified specialist workshop. ▶ Where necessary, also secure the parked vehicle against rolling away. * The yellow [(P)] indicator lamp is lit, and the red [(P)] indicator lamp flashes for approximately ten seconds after the electric parking brake has been applied or released. It then remains lit or goes out. The electric parking brake is malfunctioning.

Display messages	Possible causes/consequences and ▶ Solutions
	If the state of charge is too low: ▶ Charge the 12 V battery (⟶ page 65). **To apply:** ▶ Switch off the vehicle. The electric parking brake will be applied automatically. ▶ Apply the electric parking brake manually. If you do not want the electric parking brake to be applied, e.g. at an automatic car wash or when the vehicle is being towed, leave the vehicle switched on. This does not include having the vehicle towed with the rear axle raised. If the electric parking brake is not applied automatically: ▶ Switch the vehicle off and back on again. ▶ Release and then apply the electric parking brake manually (⟶ page 387). If it is not possible to apply the electric parking brake: ▶ Consult a qualified specialist workshop. ▶ Where necessary, also secure the parked vehicle against rolling away. **To release:** ▶ If the conditions for automatic release are fulfilled and the electric parking brake is not released automatically, release the electric parking brake manually (⟶ page 387). If it is still not possible to release the electric parking brake: ▶ Do not continue driving! Contact a qualified specialist workshop.

Tyres

Display messages	Possible causes/consequences and ▶ Solutions
Rectify tyre pressure	* The yellow warning lamp [(!)] also lights up. The tyre pressure is too low for at least one tyre, or the difference in tyre pressure between the individual wheels is too great. The wheel position is shown. ▶ Check the tyre pressure at the next opportunity (⟶ page 695). ▶ Correct the tyre pressure as necessary. ▶ Restart the tyre pressure monitoring system (⟶ page 696).
Check tyre(s)	* A warning tone will sound, and the yellow warning lamp [(!)] will light up. The tyre pressure in one or more tyres has dropped significantly. The wheel position is shown. ⚠ **WARNING** Risk of an accident due to insufficient tyre pressure • The tyres can burst. • The tyres can wear excessively and/or unevenly. • The driving characteristics as well as the steering and braking may be greatly impaired. You could then lose control of the vehicle. ▶ Observe the recommended tyre pressures. ▶ Adjust the tyre pressure if necessary. ▶ Stop the vehicle without steering or braking suddenly. Pay attention to the traffic conditions.

Display messages	Possible causes/consequences and ▶ Solutions
	▶ Secure the vehicle against rolling away. ▶ Check the tyres. If necessary, replace the wheel (⟶ page 700). ▶ Check the tyre pressure (⟶ page 695). Correct the tyre pressure as necessary.
Warning tyre malfunction	* The yellow warning lamp [(!)] also lights up. The tyre pressure for one or more tyres has dropped suddenly. The wheel position is shown. ⚠ **WARNING** Risk of an accident from driving with a flat tyre • The tyres can overheat and cause a fire. • The driving characteristics as well as the steering and braking may be greatly impaired. You could then lose control of the vehicle. ▶ Do not drive on with a flat tyre. ▶ Observe the notes on flat tyres. ▶ Stop the vehicle without steering or braking suddenly. Pay attention to the traffic conditions. ▶ Secure the vehicle against rolling away. ▶ Check the tyres. If necessary, replace the wheel (⟶ page 700).
Tyre press. monitor currently unavailable	* The yellow warning lamp [(!)] flashes for about one minute and then lights up continuously. Due to a source of radio interference, no signals from the tyre pressure sensors are being received. The tyre pressure monitoring system is temporarily malfunctioning. The tyre pressure monitoring system will restart automatically as soon as the cause has been rectified.

Display messages	Possible causes/consequences and ▶ Solutions
Wheel sensor(s) missing	* The yellow warning lamp flashes for about one minute and then lights up continuously. There is no signal from the tyre pressure sensor for at least one tyre. The display is not showing any pressure value for the respective tyre. ▶ Have the faulty tyre pressure sensor replaced at a qualified specialist workshop.
Tyre pressure monitor inoperative No tyre pressure sensors	* The yellow warning lamp flashes for about one minute and then lights up continuously. The wheels fitted do not have suitable tyre pressure sensors. The tyre pressure monitoring system is deactivated. ▶ Fit wheels with suitable tyre pressure sensors. The tyre pressure monitoring system will switch on after a few minutes of driving.
Tyre press. monitor inoperative	* The yellow warning lamp flashes for about one minute and then lights up continuously. The tyre pressure monitoring system is malfunctioning. ▶ Consult a qualified specialist workshop.

Battery

Display messages	Possible causes/consequences and ▶ Solutions
Stop vehicle See Owner's Manual	* The 12 V battery is no longer being charged and the state of charge is too low. **NOTE** Possible engine damage if you continue driving ▶ Do not continue driving under any circumstances. ▶ Consult a qualified specialist workshop. ▶ Stop the vehicle immediately in accordance with the traffic conditions. Do not continue driving!

Display messages	Possible causes/consequences and ▶ Solutions
	▶ Switch off the vehicle. ▶ Contact a qualified specialist workshop.
Stop vehicle but do not switch off	* The state of charge for the 12 V battery is too low. ▶ Stop the vehicle immediately in accordance with the traffic conditions. Do not continue driving! ▶ Leave the engine running. ▶ If the display message disappears: continue driving. ▶ If the display message does not disappear: consult a qualified specialist workshop.
12 V battery See Owner's Manual	* The vehicle is off and the state of charge of the 12 V battery is too low. ▶ Switch off electrical consumers that are not required. ▶ Drive for 30–60 mins. or ▶ Charge the 12 V battery when stationary (⟶ page 65). * If the message appears while the vehicle is switched on, this indicates an on-board electrical system malfunction. ▶ Consult a qualified specialist workshop.
Stop vehicle Leave vehicle on to charge the 12 V battery	* The state of charge of the 12 V battery is too low. ▶ Stop the vehicle immediately in accordance with the traffic conditions. Do not continue driving! ▶ Leave the vehicle running. ▶ If the display message disappears: drive on. ▶ If the display message does not disappear: consult a qualified specialist workshop.
See Owner's Manual	* A warning tone also sounds.

Display messages	Possible causes/consequences and ▶ Solutions
	THE BATTERY IS NO LONGER BEING CHARGED FOR ONE OF THE FOLLOWING REASONS: • defective alternator • torn poly-V belt • malfunction in the electronics **NOTE** Possible engine damage if you continue driving ▶ Do not continue driving under any circumstances. ▶ Consult a qualified specialist workshop. ▶ Stop the vehicle immediately in accordance with the traffic conditions and switch it off. Do not continue driving. If you do, the engine may overheat. ▶ Secure the vehicle against rolling away. ▶ Contact a qualified specialist workshop.
 Please wait 48 V battery charging	* The 48 V battery is discharged. You have switched on the vehicle while the 12 V battery was being charged with a suitable charger or while another vehicle was providing starting assistance. The discharged 48 V battery is charged automatically via the voltage converter. After a few minutes, the Possible to start the vehicle again display message will be shown on the driver display. ▶ Start the vehicle. ▶ Drive the vehicle for a while to charge the 12 V battery and the 48 V battery after disconnecting the charger from the vehicle. If the Possible to start the vehicle again display message does not appear after a few minutes: ▶ Try to start the vehicle. ▶ If the vehicle does not start, consult a qualified specialist workshop.

Display messages	Possible causes/consequences and ▶ Solutions
Possible to start the vehicle again	* The 48 V battery has been charged automatically via the voltage converter. ▶ Start the vehicle and drive for a while to charge the 12 V battery and the 48 V battery.
 Stop vehicle See Owner's Manual	* The 48 V on-board electrical system is malfunctioning. ▶ Stop the vehicle immediately in accordance with the traffic conditions. Do not continue driving! ▶ Switch off the vehicle. ▶ Contact a qualified specialist workshop.
 48 V battery See Owner's Manual	* The 48 V on-board electrical system has function restrictions. The comfort functions, suchas the climate control system, may only be available on a limited basis. It is possible to continue driving. ▶ If the display message remains active, consult a qualified specialist workshop immediately.
 Battery overheated Stop. Everybody exit vehicle! Outdoors if possible	* The 48 V battery is overheating. There is a risk of fire. ▶ Stop the vehicle immediately in accordance with the traffic conditions. ▶ If possible, park the vehicle in a clear area and make sure that all occupants exit the vehicle. ⓘ Supporting vehicle functions may activate automatically, e.g. air-recirculation mode as part of climate control. ▶ Do not continue driving! ▶ If smoke is present, leave the danger zone and call the fire service immediately. ▶ Consult a qualified specialist workshop even if there are no external signs of a fire.

Key

Display messages	Possible causes/consequences and ▶ Solutions
Place the key in the marked space See Owner's Manual	* Key detection is malfunctioning. ▶ Change the key's position in the vehicle. ▶ Place the key in the slot for starting with the key (⟶ page 351).
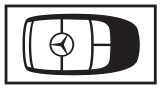 Change key batteries	* The key battery is flat. ▶ Replace the battery (⟶ page 181).
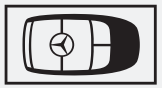 Key not detected (white display message)	* The key is currently not detected. ▶ Change the key's position in the vehicle. ▶ Try to start the vehicle. ▶ If the key is still not detected, place it in the marked space for starting with the key (⟶ page 351). ▶ Start the vehicle.
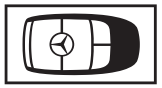 Key not detected (red display message)	* The key can no longer be detected during a journey and may no longer be in the vehicle. **IF THE KEY IS NO LONGER IN THE VEHICLE AND YOU SWITCH OFF THE VEHICLE:** • You can no longer start the vehicle. • You cannot centrally lock the vehicle. ▶ Ensure that the key is in the vehicle. If the key is in the vehicle and is still not detected: ▶ Stop the vehicle immediately in accordance with the traffic conditions.

Display messages	Possible causes/consequences and ▶ Solutions
	▶ Place the key in the marked space for starting with the key (⟶ page 351). The key battery is at low capacity or flat. ▶ Check the battery via the indicator lamp (⟶ page 178). ▶ Replace the key battery as required (⟶ page 181).
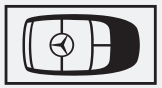 Key not detected Place the key back in the driver's area (white display message)	* The key is not in the driver's area of the vehicle (⟶ page 178). ▶ Change the key's position in the vehicle. ▶ If necessary, stop the vehicle immediately in accordance with the traffic conditions. ▶ Start the vehicle with the key in the marked space (⟶ page 351).
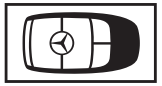 Key not detected Place the key back in the driver's area (red display message)	* The key is not in the driver's area of the vehicle (⟶ page 178). ▶ Change the key's position in the vehicle. ▶ If necessary, stop the vehicle immediately in accordance with the traffic conditions. ▶ Start the vehicle with the key in the marked space (⟶ page 351).
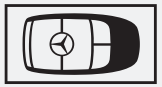 Replace key	* Have the key replaced. ▶ Consult a qualified specialist workshop.

Vehicle

Display messages	Possible causes/consequences and ▶ Solutions
Device detected at diagnostics connection See Owner's Manual	* The vehicle functions for fault detection are restricted. At least one of the main functions of the Mercedes-Benz Connect system is malfunctioning. ▶ Observe the notes on the diagnostics connection (⟶ page 114). ▶ Consult a qualified specialist workshop.
Wiper Malfunction	* The windscreen wiper is malfunctioning. ▶ Restart the vehicle. If the display message still appears: ▶ Consult a qualified specialist workshop.
	* The tailgate is open. ▶ Close the tailgate.
	* A warning tone also sounds. The bonnet is open. **WARNING** Risk of accident due to driving with the bonnet unlocked The bonnet may open and block your view. ▶ Never release the bonnet when driving. ▶ Before every trip, ensure that the engine bonnet is locked. ▶ Stop the vehicle immediately in accordance with the traffic conditions.

Display messages	Possible causes/consequences and ▶ Solutions
	▶ Secure the vehicle against rolling away. ▶ Close the bonnet.
	* At least one door is open. In addition, a warning tone sounds while the vehicle is in motion. The display shows the open door or doors. ▶ Close all the doors.
 Vehicle is operational Switch off vehicle before exiting	* You are about to exit a vehicle which is ready to drive. ▶ Switch off the vehicle, secure it against rolling backwards or forwards and take the key with you. ▶ If you do not leave the vehicle, switch off the electrical consumers, e.g. the seat heating. Otherwise, the 12-V battery may discharge and starting the engine may be possible only with the help of a second battery (jump start).
 Top up washer fluid	* The washer fluid level in the washer fluid reservoir has dropped below the minimum. ▶ Top up the washer fluid (⟶ page 32).
To switch off the vehicle, press the Start/Stop button for at least 3 seconds or 3 times	* You have pressed the start/stop button while the vehicle is in motion. ▶ Information about switching off the vehicle while driving (⟶ page 349).
 Steering malfunction Drive carefully Visit workshop	* A power steering malfunction has occurred. Steering characteristics may be impaired as a result. ▶ Continue driving with caution. ▶ Consult a qualified specialist workshop.

Display messages	Possible causes/consequences and ▶ Solutions
Steering malfunction Stop immediately See Owner's Manual	* The steering is malfunctioning. Steerability is heavily impaired. **WARNING** Risk of accident if steering capability is impaired If the steering does not function as intended, the vehicle's operating safety is jeopardised. ▶ Pull over and stop the vehicle safely as soon as possible, paying attention to road and traffic conditions. Do not continue driving under any circumstances. ▶ Consult a qualified specialist workshop. ▶ Stop the vehicle immediately in accordance with the traffic conditions. Do not continue driving! ▶ Contact a qualified specialist workshop.
Steering malfunction Increased physical effort See Owner's Manual	* The steering power assistance is malfunctioning. **WARNING** Risk of an accident due to altered steering characteristics If the power assistance of the steering fails partially or completely, you will need to use more force to steer. ▶ If safe steering is possible, drive on carefully. ▶ Visit or consult a qualified specialist workshop immediately. ▶ If safe steering is possible, drive on carefully. ▶ Visit or consult a qualified specialist workshop immediately.
Risk of vehicle rolling away Apply parking brake to park	* The transmission is malfunctioning. Park position P cannot be selected.

Display messages	Possible causes/consequences and ▶ Solutions
	▶ Stop the vehicle, paying attention to road and traffic conditions. ▶ Use the parking brake to secure the vehicle against rolling backwards or forwards. ▶ On uphill or downhill gradients, turn the front wheels so that the vehicle rolls towards the kerb if it starts moving.
Risk of rolling away Driver's seat not occupied Transmission not in P	* A warning tone also sounds. The driver's seat has been vacated and the transmission is in position N, R or D. ▶ Shift the transmission to position P . ▶ Secure the vehicle against rolling backwards or forwards.
To start engine, shift to either P or N	* You have attempted to start the vehicle in transmission position R or D. ▶ Shift the transmission to position P or N.
Apply brake to deselect P position	* You have tried to shift the transmission to position D, R or N without applying the brake. ▶ Depress the brake pedal.
Apply brake and start vehicle to shift out of P or N	* You have attempted to shift the transmission out of park position P or neutral N and into another transmission position. ▶ Depress the brake pedal. ▶ Start the vehicle. ▶ Change the transmission position.
Apply brake to engage R	* You have tried to shift the transmission to position R without applying the brake. ▶ Depress the brake pedal. ▶ Shift the transmission to position R.
N permanently active Risk of vehicle rolling	* A warning tone also sounds. The transmission was shifted to position N as the vehicle was rolling or travelling. ▶ To stop, depress the brake pedal and, when the vehicle is at a standstill, shift the transmission to position P. ▶ To continue your journey, shift the transmission to position R or D.

Display messages	Possible causes/consequences and ▶ Solutions
Risk of vehicle rolling away Driver's door open Transmission not in P	* A warning tone also sounds. The driver's door is open and the transmission is in position N, R or D. ▶ Shift the transmission to position P . ▶ Secure the vehicle against rolling backwards or forwards.
Consult workshop without changing the transmission position	* A warning tone also sounds. You can no longer change the transmission position due to a fault. If transmission position D has been selected: ▶ Consult a qualified specialist workshop without changing the gear position. If transmission position P, R or N has been selected: ▶ Notify a qualified specialist workshop.
Reversing not poss. Consult workshop	* The transmission is malfunctioning. Transmission position R cannot be selected. ▶ Notify a qualified specialist workshop.
Only select P when vehicle is stationary	* The vehicle is still moving. ▶ Stop in accordance with the traffic conditions. ▶ Shift the transmission to position P .
Apply parking brake to park Visit workshop	* A malfunction has occurred in the emergency power supply to park position P. ▶ Consult a qualified specialist workshop. ▶ Until then, always select park position P manually before you switch off the vehicle. ▶ Before leaving the vehicle, apply the electric parking brake.
Stop vehicle Leave engine running Wait Transmission cooling	* The transmission is overheating. Pulling away may be temporarily impaired or not possible. ▶ Stop the vehicle immediately in accordance with the traffic conditions. Do not continue driving! ▶ Leave the engine running.

Display messages	Possible causes/consequences and ▶ Solutions
	▶ Wait until the display message disappears before pulling away.
Transmission Malfunction Stop	* The transmission is malfunctioning. The transmission automatically switches to neutral N. ▶ Stop the vehicle immediately in accordance with the traffic conditions. ▶ Shift the transmission to position P . ▶ Inform a qualified specialist workshop.

Lights

Display messages	Possible causes/consequences and ▶ Solutions
Left low beam	* The left low beam is malfunctioning. ▶ Consult a qualified specialist workshop.
Malfunction See Owner's Manual	* The exterior lighting is malfunctioning. ▶ Consult a qualified specialist workshop. * Vehicles with trailer hitch: a fuse may be defective. **NOTE** Electrical fuses ▶ Observe the information in the supplement. You may otherwise fail to recognise dangers. ▶ Check the fuses and replace any blown fuses (see "Fuse assignment" supplement). If the display continues to show the message:

Display messages	Possible causes/consequences and ▶ Solutions
	▶ Consult a qualified specialist workshop.
Automatic driving lights inoperative	* The light sensor is faulty. The automatic driving lights are malfunctioning. ▶ Switch the light functions on/off manually (⟶ page 290). ▶ Consult a qualified specialist workshop.
Active Light System inoperative	* The active light function is faulty. ▶ Consult a qualified specialist workshop.
Adaptive Highbeam Assist Plus inoperative	* Adaptive Highbeam Assist Plus is malfunctioning. ▶ Continue driving. or ▶ Stop the vehicle in accordance with the traffic conditions and restart the vehicle. ▶ If the display message does not disappear, consult a qualified specialist workshop. ▶ Until then, operate the high beam manually.
Adaptive Highbeam Assist Plus currently unavailable See Owner's Manual	* Adaptive Highbeam Assist Plus is temporarily unavailable. The system limits have been reached (⟶ page 296). The system will become available again as soon as the causes have been eliminated. The Adaptive Highbeam Assist Plus available againdisplay message will appear. ▶ Continue driving. ▶ Operate the high beam manually until Adaptive Highbeam Assist Plus becomes available again.
MULTIBEAM LED Functions limited	* The MULTIBEAM LED system is malfunctioning. The lighting system will continue to work, but without the functions of the MULTIBEAM LED system. ▶ Consult a qualified specialist workshop.

Display messages	Possible causes/consequences and ▶ Solutions
Dynamic low beam inoperative	* The dynamic low beam is malfunctioning. The lighting system continues to function, however, without the dynamic low beam functions. ▶ Consult a qualified specialist workshop.
Hazard warning lamp system Malfunction	* The hazard warning switch is malfunctioning. ▶ Consult a qualified specialist workshop.
Low beam setting (left/right-side traffic) Manual adjustment only	* The automatic headlamp conversion for left-hand/right-hand traffic has malfunctioned. ▶ Change the headlamps over manually (⟶ page 298).
Check low beam setting (left/right-side traffic)	* The type of traffic has been selected manually. ▶ Check the setting and change it manually if necessary (⟶ page 298).
Inoperative indicator lamp in driver display. Consult workshop	* An indicator lamp on the driver display is defective. ▶ Consult a qualified specialist workshop.
Right low beam	* The right low beam is malfunctioning. ▶ Consult a qualified specialist workshop.
Number plate lamp	* The number plate lamp is malfunctioning. ▶ Consult a qualified specialist workshop.
Rear fog light	* The rear fog light is malfunctioning. ▶ Consult a qualified specialist workshop.

Display messages	Possible causes/consequences and ▶ Solutions
Reversing light	* The reversing light is malfunctioning. ▶ Consult a qualified specialist workshop.
Right daytime running lights	* The right daytime running lights are malfunctioning. ▶ Consult a qualified specialist workshop.
Left daytime running lights	* The left daytime running lights are malfunctioning. ▶ Consult a qualified specialist workshop.
Left-hand tail light/ brake light	* The left brake light/tail light is malfunctioning. ▶ Consult a qualified specialist workshop.
Right-hand tail light/ brake light	* The right brake light/tail light is malfunctioning. ▶ Consult a qualified specialist workshop.
Third brake lamp	* The third brake light is malfunctioning. ▶ Consult a qualified specialist workshop.
Right tail light	* The right tail light is malfunctioning. ▶ Consult a qualified specialist workshop.

Display messages	Possible causes/consequences and ▶ Solutions
Left tail light	* The left tail light is malfunctioning. ▶ Consult a qualified specialist workshop.
Front right parking lights	* The front right parking light is malfunctioning. ▶ Consult a qualified specialist workshop.
Front left parking lights	* The front left parking light is malfunctioning. ▶ Consult a qualified specialist workshop.
Right main beam	* The right high beam is malfunctioning. ▶ Consult a qualified specialist workshop.
Left main beam	* The left high beam is malfunctioning. ▶ Consult a qualified specialist workshop.
Right brake lamp	* The right brake light is malfunctioning. ▶ Consult a qualified specialist workshop.
Left brake lamp	* The left brake light is malfunctioning. ▶ Consult a qualified specialist workshop.

Display messages	Possible causes/consequences and ▶ Solutions
Front right turn signal	* The front right turn signal lamp is malfunctioning. ▶ Consult a qualified specialist workshop.
Right mirror turn signal	* The turn signal lamp on the right mirror is malfunctioning. ▶ Consult a qualified specialist workshop.
Left mirror turn signal	* The turn signal lamp on the left mirror is malfunctioning. ▶ Consult a qualified specialist workshop.
Rear right turn signal	* The rear right turn signal lamp is malfunctioning. ▶ Consult a qualified specialist workshop.
Rear left turn signal	* The rear left turn signal lamp is malfunctioning. ▶ Consult a qualified specialist workshop.
Front left turn signal	* The front left turn signal lamp is malfunctioning. ▶ Consult a qualified specialist workshop.

Warning and indicator lamps

Indicator and warning lamps on the driver display

Some systems will perform a self-test when the vehicle is switched on. Some indicator and warning lamps may briefly light up or flash. This behaviour is non-critical. These indicator and warning lamps indicate a malfunction only if they light up or flash after the vehicle has been started or during a journey.

Occupant safety

Warning/indicator lamp	Possible causes/consequences and ▶ Solutions
 Restraint system warning lamp	* The red restraint system warning lamp is on while the vehicle is on. The restraint system is malfunctioning (⟶ page 135). **WARNING** Risk of injury due to malfunctions in the restraint system Components in the restraint system may be activated unintentionally or not deploy as intended in an accident. ▶ Have the restraint system checked and repaired immediately at a qualified specialist workshop. ▶ Drive on carefully. ▶ Note the messages on the driver display. ▶ Consult a qualified specialist workshop immediately.

Warning/indicator lamp	Possible causes/consequences and ▶ Solutions
Seat belt warning lamp flashes	* The red seat belt warning lamp flashes, and an intermittent warning tone sounds. The driver or front passenger has not fastened their seat belt while the vehicle is in motion. ▶ Fasten your seat belt (⟶ page 134). The warning lamp and the intermittent warning tone will go out. In vehicles with automatic front passenger airbag shutoff, there are objects on the front passenger seat. ▶ Take the objects off the front passenger seat and stow them in a well-secured place. The warning lamp and the intermittent warning tone will go out.
Seat belt warning lamp lights up	* The red seat belt warning lamp lights up after the vehicle starts as soon as the driver's or front passenger door has been closed. An intermittent warning tone may also sound. For certain countries only: The red seat belt warning lamp lights up for a maximum of six seconds after the vehicle has been switched on. The driver's or front passenger's seat belt is not fastened. ▶ Fasten your seat belt (⟶ page 134). The warning lamp will go out. In vehicles with automatic front passenger airbag shutoff, there are objects on the front passenger seat. ▶ Take the objects off the front passenger seat and stow them in a well-secured place. The warning lamp will go out.

Safety systems

Warning/indicator lamp	Possible causes/consequences and ▶ Solutions
ESP® warning lamp flashes	* The yellow ESP® warning lamp flashes while the vehicle is in motion. ESP® or traction control intervenes because there is a risk of skidding or at least one wheel is spinning. Cruise control or Active Distance Assist DISTRONIC has been automatically switched off. ▶ When pulling away, accelerate only as much as is necessary.

Warning/indicator lamp	Possible causes/consequences and ▶ Solutions
	▶ Depress the accelerator pedal less during your journey. ▶ Adapt your driving style to suit the weather and road conditions. ▶ Do not switch off ESP®. In exceptional cases, it may be better to switch off ESP®(⟶ page 394).
 ESP® warning lamp lights up	* The yellow ESP® warning lamp is on while the vehicle is on. ESP® is malfunctioning. Other driving systems and driving safety systems (e.g. BAS) may also be malfunctioning. ⚠ **WARNING** Risk of skidding if ESP® is malfunctioning If ESP® is malfunctioning, ESP® cannot carry out vehicle stabilisation. In addition, other driving safety systems are switched off. ▶ Drive on carefully. ▶ Have ESP® checked at a qualified specialist workshop. ▶ Pay attention to the display messages. ▶ Drive on carefully. ▶ Consult a qualified specialist workshop immediately.
 ESP® OFF warning lamp	* The yellow ESP® OFF warning lamp is on while the vehicle is on. ESP® has been deactivated.

Warning/indicator lamp	Possible causes/consequences and ▶ Solutions
	WARNING Risk of skidding when driving with ESP® deactivated ESP® does not act to stabilise the vehicle. The availability of further driving safety systems is also limited. ▶ Drive on carefully. ▶ Deactivate ESP® only for as long as the situation requires. If ESP® cannot be activated, ESP® is malfunctioning. ▶ Have ESP® checked immediately at a qualified specialist workshop. ▶ Switch ESP® on again. In exceptional cases, it may be better to switch off ESP®(⟶ page 394). ▶ Adapt your driving style to suit the road and weather conditions. If ESP® cannot be switched on: ▶ Drive on carefully. ▶ Have ESP® checked at a qualified specialist workshop.
Parking brake indicator lamp (yellow)	* The yellow parking brake indicator lamp is flashing or lit up. The parking brake is malfunctioning. ▶ Note the messages on the driver display.

Warning/indicator lamp	Possible causes/consequences and ▶ Solutions
Parking brake indicator lamp (red)	* The red parking brake indicator lamp is flashing or lit up. ▶ Observe the notes on the parking brake (⟶ page 384). If the yellow indicator lamp (P) is simultaneously lit or flashing, the parking brake is malfunctioning. ▶ Note the messages on the driver display.
Brakes warning lamp (red)	* The red brake system warning lamp is on while the vehicle is on. **POSSIBLE CAUSES:** • The brake force boosting is malfunctioning and the braking characteristics may be affected. • There is insufficient brake fluid in the brake fluid reservoir. **WARNING** Risk of accident and injury if brake force boosting is malfunctioning If brake force boosting is malfunctioning, increased brake pedal force may be necessary for braking. The braking characteristics may be impaired. The braking distance can increase in emergency braking situations. ▶ Stop in a safe location immediately. Do not continue driving! ▶ Consult a qualified specialist workshop.

Warning/indicator lamp	Possible causes/consequences and ▶ Solutions
	WARNING Risk of an accident due to low brake fluid level If the brake fluid level is too low, the braking effect and the braking characteristics may be impaired. ▶ Stop the vehicle as soon as possible, paying attention to road and traffic conditions. Do not continue driving. ▶ Consult a qualified specialist workshop. ▶ Do not top up the brake fluid.
	▶ Stop the vehicle immediately in accordance with the traffic conditions. Do not continue driving! ▶ Secure the vehicle against rolling away. ▶ Contact a qualified specialist workshop. ▶ Do not top up the brake fluid.
ABS warning lamp	* The yellow ABS warning lamp is on while the vehicle is on. ABS is malfunctioning. If an additional warning tone sounds, this means the EBD is malfunctioning. Other driving systems and driving safety systems may also be malfunctioning. ▶ Note the messages on the driver display.

Warning/indicator lamp	Possible causes/consequences and ▶ Solutions
	WARNING There is a risk of skidding if EBD or ABS is malfunctioning The wheels may lock during braking. The steerability and braking characteristics are heavily impaired and the braking distance may increase. In addition, other driving safety systems are switched off. ▶ Drive on carefully. ▶ Have the brake system checked immediately at a qualified specialist workshop. ▶ Drive on carefully. ▶ Consult a qualified specialist workshop.

Driving and driving safety systems

Warning/indicator lamp	Possible causes/consequences and ▶ Solutions
 Warning lamp for distance warning	* The red distance warning lamp lights up while the vehicle is in motion. The distance to the vehicle in front is too small for the selected speed. If an additional warning tone sounds, this means you are approaching an obstacle at too high a speed. ▶ Be ready to apply the brakes immediately. ▶ Increase the distance. Function of Active Brake Assist (⟶ page 396).

Warning/indicator lamp	Possible causes/consequences and ▶ Solutions
Active Brake Assist warning lamp	* The Active Brake Assist warning lamp is on. Due to dirty sensors or a malfunction, the system is not available or the range of functions is restricted. ▶ Note the messages on the driver display.
Active Brake Assist warning lamp	* The Active Brake Assist warning lamp is on. The system is switched off or the range of functions has been automatically restricted. This may be the case if another driving system has been activated. ▶ Observe the notes on Active Brake Assist (⟶ page 396).
Suspension warning lamp (yellow)	* The yellow AIRMATIC warning lamp is lit. A fault has occurred in AIRMATIC. ▶ Note the messages on the driver display.
Suspension warning lamp (red)	* The red AIRMATIC warning lamp is lit. A fault has occurred in AIRMATIC. **NOTE** The vehicle's driving characteristics will have changed significantly. ▶ Consult a qualified specialist workshop. ▶ Note the messages on the driver display. ▶ Consult a qualified specialist workshop.

Vehicle

Warning/indicator lamp	Possible causes/consequences and ▶ Solutions
Trailer hitch warning lamp	* The red trailer hitch warning lamp is lit. The trailer coupling electrics are faulty. ▶ Have the trailer coupling checked at a qualified specialist workshop.
Power steering warning lamp (red)	* The red power steering warning lamp is on while the vehicle is on. The power assistance or the steering itself is malfunctioning. ⚠ **WARNING** Risk of accident if steering capability is impaired If the steering does not function as intended, the vehicle's operating safety is jeopardised. ▶ Pull over and stop the vehicle safely as soon as possible, paying attention to road and traffic conditions. Do not continue driving under any circumstances. ▶ Consult a qualified specialist workshop. ▶ Stop the vehicle immediately in accordance with the traffic conditions. Do not continue driving! ▶ Contact a qualified specialist workshop. ▶ Note the messages on the driver display.
Door indicator lamp	* The yellow "door open" indicator lamp is lit. A door is not fully closed ▶ Close all the doors.

48 V on-board electrical system

Warning/indicator lamp	Possible causes/consequences and ▶ Solutions
Reduced-power warning lamp	* The yellow reduced power warning lamp is lit. Drive system power output is reduced. ▶ Note the messages on the driver display.

Engine

Warning/indicator lamp	Possible causes/consequences and ▶ Solutions
Engine operating temperature warning lamp	* **Vehicles with a petrol engine:** after a cold start, the blue engine operating temperature warning lamp is on. Engine output and engine torque are reduced. ▶ Take this into consideration in your driving style.
Electrical fault warning lamp	* The red electrical fault warning lamp is lit. A malfunction has occurred in the electrics. ▶ Note the messages on the driver display.
Fuel reserve warning lamp	* The yellow fuel reserve warning lamp is on while the vehicle is on. The fuel supply has dropped into the reserve range. Operation of the auxiliary heating (stationary heater) is deactivated in the reserve range. ▶ Refuel the vehicle.
Engine diagnostics warning lamp	* The yellow engine diagnostics warning lamp is on while the vehicle is on. **THERE MAY BE A MALFUNCTION IN THE FOLLOWING VEHICLE SYSTEMS:** • Engine management • Injection

Warning/indicator lamp	Possible causes/consequences and ▶ Solutions
	• Exhaust system • Ignition system (in vehicles with a petrol engine) • Fuel system This may cause the emissions limit values to be exceeded and the engine to run in emergency mode. ▶ Have the vehicle checked immediately at a qualified specialist workshop.
 Coolant warning lamp	* The red coolant warning lamp is on while the vehicle is on. The coolant level is too low. If the coolant level is correct, the air supply to the radiator may be impaired or the radiator's electric fan may be faulty. The coolant is too hot and the engine is not being adequately cooled. ⚠ **WARNING** Risk of burns when opening the bonnet **IF YOU OPEN THE BONNET IN THE EVENT OF AN OVERHEATED ENGINE OR FIRE IN THE ENGINE COMPARTMENT, THE FOLLOWING SITUATIONS MAY OCCUR:** • You may come into contact with hot gases. • You may come into contact with other escaping hot operating fluids. ▶ Before opening the bonnet, allow the engine to cool down. ▶ In the event of a fire in the engine compartment, keep the bonnet closed and call the fire service. ▶ Pay attention to the display messages. ▶ Stop the vehicle immediately in accordance with the traffic conditions and switch it off. ▶ Secure the vehicle against rolling away.

Warning/indicator lamp	Possible causes/consequences and ▶ Solutions
	▶ Exit the vehicle and keep a safe distance from it until the engine has cooled down. ▶ Check the coolant level and top up with coolant, complying with the instructions (⟶ page 644). ▶ If the coolant has to be topped up frequently, have the engine cooling system checked at a qualified specialist workshop. ▶ Ensure that the air supply to the radiator is not impaired, e.g. by a plastic bag that has been blown onto the grille. ▶ Observe the coolant temperature display on the driver display. ▶ Do not restart the engine until the coolant temperature is below 120°C. If you do, the engine may be damaged. ▶ Drive on to the nearest qualified specialist workshop. Avoid high engine loads, e.g. driving in mountainous terrain or stop-and-go driving.
 Coolant warning lamp	* The red coolant warning lamp is on while the vehicle is on. A warning tone also sounds. The coolant has exceeded the temperature of 120°C. The air supply to the radiator may be impaired or the coolant level may be too low. The engine has not been sufficiently cooled and may be damaged.

⚠ **WARNING**
Risk of burns when opening the bonnet

IF YOU OPEN THE BONNET IN THE EVENT OF AN OVERHEATED ENGINE OR FIRE IN THE ENGINE COMPARTMENT, THE FOLLOWING SITUATIONS MAY OCCUR:

- You may come into contact with hot gases.
- You may come into contact with other escaping hot operating fluids.

▶ Before opening the bonnet, allow the engine to cool down.

▶ In the event of a fire in the engine compartment, keep the bonnet closed and call the fire service.

▶ Pay attention to the display messages.

▶ Stop the vehicle immediately in accordance with the traffic conditions and switch it off.

Warning/indicator lamp	Possible causes/consequences and ▶ Solutions
	▶ Secure the vehicle against rolling away. ▶ Exit the vehicle and keep a safe distance from it until the engine has cooled down. ▶ Check the coolant level and top up with coolant, complying with the instructions (⟶ page 644). ▶ If the coolant has to be topped up frequently, have the engine cooling system checked at a qualified specialist workshop. ▶ Ensure that the air supply to the radiator is not impaired, e.g. by a plastic bag that has been blown onto the grille. ▶ Observe the coolant temperature display on the driver display. ▶ If the coolant temperature is below 120°C, you can continue driving to the nearest qualified specialist workshop. ▶ Avoid high engine loads, e.g. driving in mountainous terrain or stop-and-go driving.
Coolant warning lamp	*The red coolant warning lamp is lit while the vehicle is being started, and the coolant temperature display is positioned at the beginning of the scale. The temperature sensor for the coolant temperature display is defective. The coolant temperature is no longer being monitored. If the coolant is too hot, the engine may be damaged. ▶ Stop the vehicle immediately in accordance with the traffic conditions and switch it off. Do not continue driving! ▶ Secure the vehicle against rolling backwards or forwards. ▶ Notify a qualified specialist workshop.

Tyres

Warning/indicator lamp	Possible causes/consequences and ▶ Solutions
Tyre pressure monitoring system warning lamp flashes	*The yellow tyre pressure monitoring system warning lamp (pressure loss/malfunction) flashes for approximately one minute and then remains lit. The tyre pressure monitoring system is malfunctioning.

Warning/indicator lamp	Possible causes/consequences and ▶ Solutions
	WARNING There is a risk of an accident if the tyre pressure monitoring system is malfunctioning The tyre pressure monitoring system cannot issue a warning if there is pressure loss in one or more of the tyres. Tyres with insufficient tyre pressure may impair the driving characteristics as well as steering and braking. ▶ Have the tyre pressure monitoring system checked at a qualified specialist workshop. ▶ Pay attention to the display messages. ▶ Consult a qualified specialist workshop.
 Tyre pressure monitoring system warning lamp lights up	* The yellow tyre pressure monitoring system warning lamp (pressure loss/malfunction) is on. The tyre pressure monitoring system has detected a loss of pressure in at least one tyre. **WARNING** Risk of an accident due to insufficient tyre pressure • The tyres can burst. • The tyres can wear excessively and/or unevenly. • The driving characteristics as well as the steering and braking may be greatly impaired. You could then lose control of the vehicle. ▶ Observe the recommended tyre pressures. ▶ Adjust the tyre pressure if necessary. ▶ Stop the vehicle without steering or braking suddenly. Pay attention to the traffic conditions. ▶ Secure the vehicle against rolling away.

Warning/indicator lamp	Possible causes/consequences and ▶ Solutions
	▶ Pay attention to the display messages. ▶ Check the tyres and, if necessary, replace the wheel (⟶ page 700). ▶ Check the tyre pressure. You can check the tyre pressure electronically (⟶ page 695). ▶ Correct the tyre pressure as necessary.

Index

Searching for something specific? Click on the relevant initial letter here and look it up.
Incidentally, you can also use your PDF reader's search function at any time.

0-9
A
B
C
D
E
F
G
H
I
J
K
L
M
N
O
P
Q
R
S
T
U
V
W

0-9

4MATIC

48 V on-board electrical system

Operating safety

360° Camera

Button

Care

Function

Opening the camera cover (reversing camera)

A

A/C function
Activating/deactivating (operating unit)
ABS
Access data
Setting (Bluetooth®)
Accident and Breakdown Management
Mercedes-Benz Support calls
Accident, emergency call
Activating/deactivating the acoustic locking verification signal
Active Brake Assist
Function
Setting
Active Distance Assist DISTRONIC
activating/deactivating
activating/deactivating the variable limiter
Active Speed Limit Assist
calling up a speed
Function
increasing/decreasing the speed
Route-based speed adaptation
storing a speed
Active Emergency Stop Assist, Emergency Stop Assist
Function

Active Lane Keeping Assist
- Activating/deactivating
- Function
- Setting the sensitivity
- Trailer operation

Active light function

Active Parking Assist
- Automatic braking function
- Exiting a parking space
- Function
- Manoeuvering brake function
- Parking
- Pausing

Active Speed Limit Assist

Active Steering Assist
- Activating/deactivating
- Function

Adaptive brake lights

Adaptive cruise control

Adaptive Highbeam Assist Plus
- Function
- Switching on/off

AdBlue®, Reducing agent
- Additives
- Capacity
- Displaying the fill level
- Fill level

Notes
Purity
Range
Topping up
Add-on equipment (body/equipment mounting directives)
Additives
AdBlue®
Additives (engine oil)
Additives (fuel)
Engine oil
Fuel
Adjusting the air vents
Adjusting the armrest
After-sales service
Air conditioning menu
Air distribution
Calling up
Air recirculation button
Convenience opening/closing
Air suspension
AIRMATIC function
Setting (AIRMATIC)
Airbag
Inflating
Overview
PASSENGER AIR BAG indicator lamps

Warning lamp

AIRMATIC

Function

Setting the vehicle level

Alarm system

All-wheel drive

Alternative route

Ambient lighting

Android Auto

Connecting a mobile phone (wired)

Connecting a mobile phone (wireless)

Ending

Information

Sound settings

Transferred vehicle data

Android smartphone

Animals

Anti-lock braking system

Anti-theft alarm system

Activating/deactivating

Activating/deactivating interior protection

Function

Interior motion sensor

Stopping the alarm

Switching tow-away protection on/off

Tow-away protection

Anti-theft protection
- Anti-theft alarm system
- Immobiliser

Apple CarPlay®, Smartphone
- Connecting an iPhone® (cable)
- Connecting an iPhone® (wireless)
- Ending
- Notes
- Overview
- Sound settings
- Transferred vehicle data

Apps, Digital Extras
- Mercedes-Benz
- Mercedes-Benz Connect

Aquaplaning

Armrest
- Stowage compartment

Ashtray
- in the centre console
- In the rear

Assembly licence plate, front

Assistance system

Assistant display
- Menu (driver display)

ASSYST PLUS
- Non-operational times with the battery disconnected

Regular maintenance work
Service interval display
Special service requirements

ASSYST PLUS service interval display

Displaying the service due date

Attachments

ATTENTION ASSIST

Function
Setting

Attention assistant

Augmented reality

MBUX route guidance

Authorised workshop

Automatic car wash

Automatic climate control

Automatic distance control

Automatic driving lights

Automatic emergency call

Automatic engine start

ECO start/stop function

Automatic engine stop

ECO start/stop function

Automatic front passenger airbag deactivation

Function

Automatic front passenger airbag shut-off

Information (child restraint system on the front passenger seat)
PASSENGER AIR BAG indicator lamps

Automatic measures after an accident

Automatic transmission

- DIRECT SELECT lever
- Drive program display
- Drive programs
- DYNAMIC SELECT switch
- Engage park position
- Engaging drive position
- Engaging neutral
- Engaging reverse gear
- Kickdown
- Manual shifting
- Restricting the shift range
- Selecting the drive program
- Steering wheel gearshift paddles
- Transmission position display
- Transmission positions

Auxiliary heating

- Auxiliary warm-air heater
- Hot-water auxiliary heater
- Notes

Auxiliary warm-air heater, Stationary heater, Stationary heating

- activating
- Function
- Immediate heating mode
- Overview, timer

Problems
Setting the departure time
Setting the temperature/operating duration
Setting the timer

Axle load

B

Baby
- Pregnancy (seat belt)

Back support, Lumbar support

Bad weather light

Ball coupling
- Attaching

Ball neck
- Removing

BAS

Basic information

Battery
- Care
- Charging
- Charging the vehicle battery
- Declaration of conformity
- Key
- Notes (vehicle battery)
- Remote control (stationary heating/ventilation)
- Starting assistance (vehicle)

Battery (12 V battery)
- Notes (starting assistance and charging)
- Replacing

Battery (48 V)

Bed extension

Belt

Adjusting the height

Fastening

Notes on wearing correctly

Releasing

Berth

Blind Spot Assist

Activating/deactivating

Exit warning

Function

Function of Rear Cross Traffic Alert

Bluetooth®

Connecting a mobile phone

Information

Setting up an Internet connection

Switching on/off

Bottle holder

Brake

ABS (anti-lock braking system)

Activating/deactivating the HOLD function

Active Brake Assist

Adaptive brake lights

BAS (Brake Assist System)

Braking with parking brake

Downhill gradient

Driving instructions

EBD (Electronic Brakeforce Distribution)
Heavy/light loads
HOLD function
Limited braking effect (salt-treated roads)
New brake disks/brake linings
new brake linings/brake disks
Post-collision brake
Running-in notes
Wet road surfaces

Brake Assist System
Brake fluid
Brakeforce Distribution
Braking assistance
Breakdown
Changing a wheel
Overview of aids
Tow-starting
Towing (both axles on the ground)
Transporting the vehicle

Bulbs

C

Call list
- Deleting
- Making a call
- Overview
- Selecting options

Calling Support at Mercedes-Benz

Calling up a web page

Calls, Telephone operation
- Accepting
- Activating functions during a call
- Calls with several participants
- Declining
- Ending a call
- Incoming call during an existing call
- Making
- Telephone
- Using the international dialling code

Camera
- 360° camera function
- Driver camera
- Information
- Off-road function
- Opening the camera cover (reversing camera)

Reversing camera
Transparent bonnet

Cameras

Care

Car key

Car wash

Automatic car wash
Car wash mode

Car wash mode

Activating/deactivating

Car-to-X-Communication

Display on map
Overview
Sending hazard warnings

Care

Automatic car wash
Car wash mode

Carpet
Display
Driver display
Exterior lighting
Genuine wood/trim elements
Headliner
High-pressure cleaner
Plastic trim
Reversing camera/360° camera

Seat belt
Seat cover
Sensors
Tailpipes
Trailer hitch
Washing by hand
Wheels/rims
Windows
Wiper blades

Carpet
Cleaning

Carrier systems
Notes

Central locking system
Button

Centre airbag (driver's seat backrest)
Deployment
Information

Centre console
Overview (between the seats)
Overview (centre)
Overview (lower)
Stowage compartment

Changing a wheel
Fitting a new wheel
Lowering the vehicle
Preparing

Raising the vehicle
Removing a wheel

CHARGE display

Charging

USB port
Wirelessly charging a mobile phone

Charging (battery)

Child safety lock

Sliding door

Child seat

Adjusting the vehicle seat
Approval categories
Basic instructions
Brief overview of most important points
Fitting ISOFIX/i-Size
Front passenger seat
Overview of warning stickers
Rearward-facing
Recommendations for child restraint systems
Risks/dangers
Seats suitable for belt-secured child restraint systems
Seats suitable for i-Size child restraint systems
Seats suitable for ISOFIX child restraint systems
Securing to the front passenger seat with the seat belt
Top Tether
Without automatic co-driver airbag shutoff

Children

Avoiding dangers in the vehicle

Basic instructions

Cigarette lighter

City lighting

Classic menu display content

Selecting

Clean varnish

Cleaning

Automatic car wash

Car wash mode

High-pressure cleaner

Paint

Vehicle interior

Washing by hand

Climate control

Activating/deactivating

Activating/deactivating (rear operating unit)

Activating/deactivating the A/C function (control panel)

Activating/deactivating the synchronisation function (control panel)

Adjusting the air vents

Air distribution settings

Automatic control

Auxiliary heating

Auxiliary warm-air heater

Calling up the air conditioning menu

Demisting windows
Hot-water auxiliary heater
Notes
Rear operating unit
Refrigerant
Residual heat utilisation
Setting (MBUX multimedia system)
Setting the air distribution
Setting the airflow
Setting the temperature
Switching air-recirculation mode on/off
Switching the rear window heater on/off
TEMPMATIC operating unit
THERMOTRONIC control panel
Ventilating the vehicle (convenience opening)
Climate control in the rear compartment when the vehicle is started
Activating/deactivating
Co-driver seat
Adjusting electrically
COC papers, CERTIFICATE OF CONFORMITY
Cockpit
Combination switch
Lights
Rear window wiper
Windscreen wipers

Communication module
- Setting up an Internet connection

Commuter route

Compass

Components subject to radio regulations
- Declaration of conformity

Connection status
- Displaying
- Overview

Contacts, Address book, Phone book
- Calling up
- Deleting
- Importing
- Importing (overview)
- Information
- Making a call
- Name format
- Note about suggestions
- Options
- Selecting options for suggestions
- Storing

Convenience closing
- with key

Convenience opening
- with key

Convenience opening/closing
- via air recirculation button

Coolant
- Capacity
- Checking
- Notes
- Topping up

Copyright

Cornering light

Correct use

Cross traffic (warning)

Crosswind Assist

Cruise control
- activating/deactivating
- Calling up a speed
- Function
- Requirements:
- Setting a speed
- Storing a speed

Cup holder
- Opening on the luxury seat

Cup holders
- Centre console
- Rear

D

Damage
- Limited protection

Dashboard

Dashcam
- Configuring settings
- Notes
- Selecting a USB device
- Starting/stopping individual recordings
- Starting/stopping loop recording

Data processing in the vehicle

Data protection rights

Data storage
- Data protection rights
- electronic control units
- Onboard Logic Unit
- Online services

Daytime running lights, Constant headlamp mode
- Activating/deactivating
- Replacing light bulbs

Dealership

Declaration of conformity
- Battery
- Components subject to radio regulations
- Electromagnetic compatibility

Jack

Deployed components

Limited protection

Deployment situations

Destination

Editing intermediate destinations

Editing the previous destinations

Saving as a favourite

Destination entry

Entering an intermediate destination

Entering geo-coordinates

Selecting a contact

Selecting from favourites

Selecting from the map

Selecting previous destinations

Destination entry (multimedia system)

Notes

Selecting a POI

Diagnostics connection

Diesel

Low outside temperatures

Notes

Digital inside rear-view mirror

Digital Owner's Manual

DIRECT SELECT lever

Engaging drive position

Engaging neutral
Engaging park position automatically
Engaging reverse gear
Function
Select transmission position
Selecting park position
Transmission position display
Transmission positions

Display
Cleaning

Display (MBUX multimedia system)
Settings

Display failure
Driver display
What to do in the event of driver display malfunction

Display message
Calling up on driver display
Notes

Display messages
- - - km/h
LIM - - - km/h
- - - km/h
--- km/h
2nd seat row, centre Malfunction See Owner's Manual
2nd seat row, left Battery low

2nd seat row, left Check electrical connection See Owner's Manual
2nd seat row, left Malfunction See Owner's Manual
2nd seat row, right Battery low
2nd seat row, right Check electrical connection See Owner's Manual
2nd seat row, right Malfunction See Owner's Manual
3rd seat row, centre Malfunction See Owner's Manual
3rd seat row, left Battery low
3rd seat row, left Check electrical connection See Owner's Manual
3rd seat row, left Fault Consult workshop
3rd seat row, left Malfunction See Owner's Manual
3rd seat row, right Battery low
3rd seat row, right Check electrical connection See Owner's Manual
3rd seat row, right Malfunction See Owner's Manual
12 V battery See Owner's Manual
48 V battery See Owner's Manual
Active Light System inoperative
AdBlue system fault Emerg. op.: max. XXX km/h Start not poss. in XXX km
AdBlue system fault Emergency op. in XXX km See Owner's Manual
AdBlue system fault See Owner's Manual
AdBlue system fault Start not possible See Owner's Manual
Add 1 litre engine oil when next refuelling
ATTENTION ASSIST inoperative
ATTENTION ASSIST: Take a break!
Automatic driving lights inoperative
Battery overheated Stop. Everybody exit vehicle! Outdoors if possible
Beginning emergency stop
Camera view restricted See Owner's Manual

Change key batteries
Check brake fluid level
Check engine oil level when next refuelling
Clean the fuel filter
Compressor is cooling
Currently unavailable Battery low
Currently unavailable Refuel
currently unavailable See Owner's Manual
currently unavailable See Owner's Manual
Diesel particulate filter Drive at high engine speeds See Owner's Manual
Dynamic low beam inoperative
Engine oil level cannot be measured
Engine oil level Reduce oil level
Engine oil level Stop Switch off the vehicle
Engine oil pressure Stop Switch off the vehicle
Front left malfunction Consult workshop
Front left parking lights
Front left turn signal
Front right malfunction Consult workshop
Front right parking lights
Front right turn signal
inoperative See Owner's Man.
inoperative See Owner's Manual
inoperative See Owner's Manual
EBD inoperative See Owner's Manual
inoperative
Key not detected (red display message)

Key not detected (white display message)
Key not detected Place the key back in the driver's area (white display message)
Key not detected Place the key back in the driver's area (red display message)
Left brake lamp
Left daytime running lights
Left main beam
Left mirror turn signal
Left tail light
Left window airbag malfunction Consult workshop
Left-hand tail light/ brake light
Lowering
Malfunction See Owner's Manual
Number plate lamp
off
Off
Off
Parking brake See Owner's Manual
Parking brake Switch on vehicle to release
passive
Please wait 48 V battery charging
Rear fog light
Rear left turn signal
Rear right turn signal
Rear seat monitoring currently unavailable See Owner's Manual
Rear seat monitoring restricted See Owner's Manual
Refill AdBlue See Owner's Manual
Remain alert! (white display message)

Replace air filter
Replace key
Restraint system malfunction Consult workshop
Restricted during trailer operation
Reversing light
Right brake lamp
Right daytime running lights
Right low beam
Right main beam
Right mirror turn signal
Right tail light
Right window airbag malfunction Consult workshop
Right-hand tail light/ brake light
Rising
Second row of seats, centre Malfunction Consult workshop
Second row of seats, left Malfunction Consult workshop
Second row of seats, right Malfunction Consult workshop
See Owner's Manual
Steering malfunction Drive carefully Visit workshop
Steering malfunction Increased physical effort See Owner's Manual
Steering malfunction Stop immediately See Owner's Manual
Stop vehicle but do not switch off
Stop vehicle Leave vehicle on to charge the 12 V battery
Stop vehicle See Owner's Manual
Stop vehicle See Owner's Manual
suspended
temporarily unavailable Sensors dirty

Third brake lamp
Third row of seats, centre Malfunction Consult workshop
Third row of seats, right Malfunction Consult workshop
Top up AdBlue Emergency op. in XXX km See Owner's Manual
Top up AdBlue XX,X l Emerg. op.: max. XXX km/h Start not poss. in XXX km
Top up coolant See Owner's Manual
Top up washer fluid
Urgently top up coolant See Owner's Manual
Vehicle is operational Switch off vehicle before exiting
120 km/h Maximum speed exceeded
Active Brake Assist Functions currently limited See Owner's Manual
Active Brake Assist Functions limited See Owner's Manual
Active Distance Assist available again
Active Distance Assist currently unavailable See Owner's Manual
Active Distance Assist inoperative
Active Lane Keeping Assist currently unavailable See Owner's Manual
Active Lane Keeping Assist functions restricted See Owner's Manual
Active Lane Keeping Assist inoperative
Active Parking Assist and PARKTRONIC inoperative See Owner's Manual
Active Parking Assist Parking cancelled (example)
Active Steering Assist currently unavailable due to multiple emergency stops
Active Steering Assist currently unavailable See Owner's Manual
Active Steering Assist inoperative
Adaptive Highbeam Assist Plus currently unavailable See Owner's Manual
Adaptive Highbeam Assist Plus inoperative
Air conditioning system fault See Owner's Manual
Apply brake and start vehicle to shift out of P or N

Apply brake to deselect P position
Apply brake to engage R
Apply parking brake to park Visit workshop
Blind Spot Assist and exit warning currently unavailable See Owner's Manual
Blind Spot Assist and exit warning inoperative
Check brake pads See Owner's Manual
Check low beam setting (left/right-side traffic)
Check tyre(s)
Consult workshop without changing the transmission position
Cruise control and Limiter inoperative
Cruise control inoperative
Device detected at diagnostics connection See Owner's Manual
Driver camera inoperative See Owner's Manual
Front passenger airbag disabled See Owner's Manual
Front passenger airbag enabled See Owner's Manual
Hazard warning lamp system Malfunction
Inoperative indicator lamp in driver display. Consult workshop
Limiter inoperative
Low beam setting (left/right-side traffic) Manual adjustment only
MULTIBEAM LED Functions limited
N permanently active Risk of vehicle rolling
Only select P when vehicle is stationary
PARKTRONIC inoperative See Owner's Manual
Place the key in the marked space See Owner's Manual
Possible to start the vehicle again
PRE-SAFE inoperative See Owner's Manual
Rectify tyre pressure

Reversing not poss. Consult workshop
Risk of rolling away Driver's seat not occupied Transmission not in P
Risk of vehicle rolling away Apply parking brake to park
Risk of vehicle rolling away Driver's door open Transmission not in P
Speed limit (winter tyres) XXX km/h
Speed Limit Assist currently unavailable See Owner's Manual
Speed Limit Assist inoperative
Stop vehicle Leave engine running Wait Transmission cooling
The camera's view of the driver is currently impeded Affected functions: see Owner's Manual
To start engine, shift to either P or N
To switch off the vehicle, press the Start/Stop button for at least 3 seconds or 3 times
Traffic Sign Assist currently unavailable See Owner's Manual
Traffic Sign Assist inoperative
Transmission Malfunction Stop
Tyre press. monitor currently unavailable
Tyre press. monitor inoperative
Tyre pressure monitor inoperative No tyre pressure sensors
Warning tyre malfunction
Wheel sensor(s) missing
Wiper Malfunction

Displaying road names/house numbers

Distance control

Distance warning

Distraction detection

DISTRONIC

Door

Activating/deactivating the automatic locking mechanism

Ambient lamp
Locking/unlocking emergency key
Opening (from the inside)
Unlocking (from the inside)
Door control panel
Downhill Speed Regulation
Drinks holder
Drive Away Assist
Drive program display
Drive programs
Driver camera
activating/deactivating
Function
Driver display, Instrument cluster
Adjusting the brightness
Assistant display
Care
Classic menu
Malfunction
Menu overview
Navigation menu
Notes
Notes on warning/indicator lamps
Operating
Overview of displays
POWER/CHARGE display
Service menu

Status indicators (overview)
Understated menu
Warning/indicator lamps
What to do in the event of malfunctions

Driver's seat

Adjusting electrically
Adjusting manually

Driving abroad

Light adjustment low beam

Driving instructions

Brakes
Downhill gradient
General driving tips
Limited braking effect (salt-treated roads)
New brake disks/brake linings
Parking brake
Running-in notes
Short-distance trips
Subjecting brakes to a load
Wet road surfaces (brake)

Driving notes

Transport by rail

Driving safety system

ABS (anti-lock braking system)
Active Brake Assist
Active Emergency Stop Assist
Active Steering Assist

Adaptive brake lights
ATTENTION ASSIST
BAS (Brake Assist System)
Blind Spot Assist
Cameras
Cruise control
EBD (Electronic Brakeforce Distribution)
ESP® (Electronic Stability Program)
ESP® Crosswind Assist
ESP® trailer stabilisation
Hill Start Assist
HOLD function
Overview
Radar and ultrasonic sensors
Speed Limit Assist
Traffic light view
Traffic Sign Assist
Trailer Manoeuvering Assist
Your responsibility
Driving system
Driving tips
Aquaplaning
Driving on flooded roads
Driving on wet roads
Light adjustment when driving abroad
Mountainous terrain
Drowsiness detection

DSR

Activating/deactivating

Changing the target speed

Function

Dynamic handling control system

Dynamic low beam

Activating/deactivating

Overview

DYNAMIC SELECT

Calling up the fuel consumption indicator

Displaying engine data

Displaying vehicle data

Drive program display

Drive programs

Function

Operating

Selecting the drive program

E

E-mails

E10, Fuel (petrol)

EASY-ENTRY easy entry and exit feature

- Installing/removing (rear bench seat)
- Using (luxury rear seat)
- Using (rear bench seat)
- Using (rear seat)

EASY-PACK tailgate

- Limiting the opening angle
- Notes
- Opening/closing
- Opening/closing the rear window
- Programming the key button
- Resetting

EBD, Electronic Brakeforce Distribution

EC operating permit number

ECO display

- Function

ECO start/stop function, Start/stop function

- Activating/deactivating
- Automatic engine start
- Automatic engine stop
- Conditions (automatic engine stop/start)

Operation

Electric mode

POWER/CHARGE display

Electric parking brake

Automatically applying

Emergency braking

Manually applying/releasing

Notes

Releasing automatically

Electric sliding door

Function

open/close with key button

Opening/closing (from the inside)

opening/closing (from the outside)

Problems

Programming the key button

Resetting

Electromagnetic compatibility

Declaration of conformity

Electronic Stability Program

Activating/deactivating

Electronics

Engine electronics

Fitting two-way radios

Emergency

Fire extinguisher

First-aid kit (soft-sided)
Overview of aids
Removing the warning triangle
Safety vest
Setting up the warning triangle

Emergency braking

Electric parking brake

Emergency key

Locking/unlocking the door
Removing/inserting

Emergency operation mode

Starting the vehicle

ENERGIZING Coach

Calling up
Function

ENERGIZING COMFORT

Overview of programmes
Starting programme

Energy consumption

Key

Engaging drive position (automatic transmission)

Engaging neutral (automatic transmission)

Engaging reverse gear (automatic transmission)

Engine

ECO start/stop function
Parking
Starting assistance

Engine data
- Displaying
- DYNAMIC SELECT

Engine electronics

Engine number

Engine oil
- Additives
- Capacity
- Checking the oil level using the on-board computer
- Topping up

Engine output
- Notes on changes

Entering characters
- Deleting the user dictionary
- Function/notes
- Setting the keyboard language
- using the touchscreen

Environmental protection
- Driving style
- Take-back of end-of-life vehicles

Environmentally-responsible driving style

ESC, Electronic Stability Control

ESP®
- Activating/deactivating
- Crosswind Assist
- Function

Trailer stabilisation

Exhaust gas aftertreatment

Exit warning

Blind Spot Assist

Exiting a parking space

Active Parking Assist

Drive Away Assist

PARKTRONIC

Exterior lighting

Care

Changing illuminants (rear)

Light adjustment when driving abroad

Light switch

Replacing illuminants (front)

F

Factory settings
- MBUX reset function

Fastening

Fatigue detection

Fault message
- Driver display

Favourites
- Adding a destination
- Calling up
- Deleting
- Home address
- Moving
- Overview
- Renaming
- Work address

Fill level
- AdBlue®

Filling station search
- Starting automatic search
- Switching the automatic search on/off

Fire extinguisher

First aid
- First-aid kit (soft-sided)

First-aid kit (soft-sided)

Fitting accessories

Limited protection

Fitting the licence plate (front)

Flat tyre

Changing a wheel

Notes

Fog light (extended range)

Foil covering

Radar and ultrasonic sensors

Folding table

Folding in/out on the seat backrest

Installing/removing

Moving

Using

Footrest in the rear

Free Software

Frequencies

Mobile phone

Two-way radios

Front airbag

Inflating

Front passenger airbag

Disabling/enabling

Front passenger airbag shutoff, PASSENGER AIR BAG OFF

Function

Information (child restraint system on the front passenger seat)

Front passenger seat

Adjusting manually

Front seat

rotating

Front windscreen wipers

Replacing the wiper blades

Fuel

Diesel

E10

Flexible-fuel vehicles

Low outside temperatures

Petrol

Quality (diesel)

Quality (petrol)

Refuelling

Sulphur content

Tank content and fuel reserve

Use of additives

Fuel consumption indicator

Function the event of an accident

Information (how the restraint system works)

Fuses

G

Gearshift recommendation
Manual shifting (automatic transmission)
Genuine parts
Genuine wood (care)
Glasses compartment
Glide mode
Global search
Function
Overview
Glove compartment
Grab handles
Notes
Gross mass

H

Handbrake (electric)

Handling characteristics
- Unusual

Hands-free system

Hazard warning light system

Hazard warnings
- Car-to-X-Communication

Head restraint
- Adjusting electrically
- Adjusting manually

Headlamp flasher

Headlamp range control

Headliner (care)

Help call
- Mercedes-Benz emergency call system

High beam
- Activating/deactivating
- Adaptive Highbeam Assist Plus
- Replacing light bulbs

High-pressure cleaner

Hill descent control

Hill Start Assist

HOLD function

- Notes
- Switching on/off

Home screen

- Media display

Hot-water auxiliary heater

- Displays (remote control)
- Function
- Problems
- Switching on/off (button)
- switching on/off (remote control)
- Switching on/off by remote control

I

i-Size child restraint system
- Fitting
- Suitable seats

Identification plate
- Refrigerant

Immobiliser

Implied warranty

Importer information
- Regulatory radio information

Inattention detection

Incorrect behaviour by vehicle occupants
- Limited protection

Indicator lamps

Indicator lamps/warning lamps
- PASSENGER AIR BAG

inside rear-view mirror
- automatic anti-dazzle mode
- digital inside rear-view mirror

Installations

Instrument lighting, Dashboard lighting

Interior lighting
- Ambient lighting
- Replacing illuminants

Setting
Switch-off delay time

Interior motion sensor

Activating/deactivating
Function

Intermediate destination

Editing
Starting an automatic filling station search
Starting the automatic service station search

Internet

Calling up a web page
Calling up the web browser settings
Calling up web browser options
Deleting a bookmark
Deleting browser data
Managing bookmarks
Smartphone integration
Web browser in the background
Web browsers

Internet connection

Cancelling permission (mobile phone)
Displaying the connection status
Establishing
Information
Overview of connection status
Restrictions
Setting access data (Bluetooth®)

Setting up (communication module)
Setting up (Wi-Fi)
Setup (Bluetooth®)

iPad® attachment

iPhone®

Smartphone integration

ISOFIX child restraint system

Fitting
Suitable seats

J

Jack

Declaration of conformity

Storage location

Stowage compartment (rear)

Jump-start connection point, Starting assistance

K

Key

acoustic locking verification signal
Battery
Central locking system
Deactivating a function
electric sliding door open/close
Emergency key
Energy consumption
Fastening to keyring
Functions
Problem
Programming the button for the electric sliding door
Programming the button for the rear window/tailgate
Radio connection
Unlocking setting

L

Lamp

Lane detection

Language

- Notes
- Setting

Lashing points

- Loading capacity
- Overview

Last destinations

- Selecting

Level control

- AIRMATIC function
- Setting (AIRMATIC)

Light

- Dynamic low beam

Light adjustment

- Driving abroad

Light switch (overview)

Lights

- Activating/deactivating dynamic low beam
- Activating/deactivating the surround lighting
- Active light function
- Adaptive Highbeam Assist Plus

Adjusting the instrument lighting
Automatic driving lights
Bad weather light
City lighting
Combination switch
Cornering light
Fog light (extended range)
Hazard warning lights
Headlamp flasher
High beam
Light adjustment when driving abroad
Light switch
Low beam
Motorway mode
Parking lights
Range
Rear fog light
Responsibility with lighting systems
Setting low beam
Standing lights
Switch-off delay time
Switching on the daytime running lights
Topographical compensation
Turn signal lights

Limiter

Activating/deactivating
Buttons

Calling up a speed
Function
Passive mode
Permanent setting
Requirements:
Selecting
Setting a speed
Storing a speed

Live Traffic Information
Displaying the traffic map
Displaying traffic incidents
Extending a subscription
Information from the service provider
Registering

Load compartment and rear interior lamps
Replacing illuminants

Load distribution

Load securing
Lashing points
Notes

Load securing aid
Load protection net
Luggage compartment partition

Loading guidelines

Locking/unlocking
Activating/deactivating the automatic locking mechanism

Automatic locking (MMS)
Doors (interior)
Emergency key

Low beam

Activating/deactivating
Left-hand/right-hand traffic
Light adjustment when driving abroad
Replacing light bulbs
Setting

Lubricants

Additives (engine oil)
Operating fluids Notes

Luggage compartment partition

Folding up/down
Removing/fitting
Stowage compartments

Lumbar support (4-way)

Luxury rear seat

Adjusting electrically
Bench seat anchorage
EASY-ENTRY easy entry and exit feature
Footrest
Seating variants

M

M+S tyres

Maintaining a safe distance

Active Distance Assist DISTRONIC

Maintenance

ASSYST PLUS

Notes

Paint

Malfunction

Restraint system

Manoeuvering brake function

Manoeuvring

Manoeuvering brake function

Manoeuvring assistant

Activation/deactivation

Drive Away Assist

Manoeuvering brake function

Manual gearshifting

Activating/deactivating

Map, Traffic map

Avoiding an area

Avoiding an area (overview)

Changing an area

Deleting an area

Displaying online map contents
Displaying the compass
Displaying the map version
Displaying the range
Displaying the satellite map
Displaying the traffic map
Displaying weather information
Map data
Moving
Route overview after start
Selecting additional information
Selecting POI symbols
Setting the map scale
Setting the map scale automatically
Updating
Map functions
MB Apps
Calling up Digital Extras
Calling up the Mercedes me ID user account
Unlinking the Mercedes me ID user account
MBUX multimedia system
Activating/deactivating standby mode
Adjusting the volume
Dashcam
Display settings
ENERGIZING COMFORT programmes (overview)
Factory setting

Global search
Home screen
MB Apps
Overview
Set keyboard
Setting route-based speed adaptation
Standby mode function
Starting the ENERGIZING COMFORT programme
Switching the sound on/off
Touchscreen

MBUX voice assistant

E-mails
Language setting
Media voice commands
Online voice control
Operable functions
Operating safety
Setting
Speech quality
Voice commands
Voice prompting

Media

General information

Media display

Home screen
Operating

Media mode

Adding a favourite song
Connecting Bluetooth® audio equipment
Connecting USB devices
Controlling media playback
Copyright and trademarks
Information about the search function in categories
Overview of the media menu
Playing back similar music tracks
Removing a favourite song
Starting a search in categories
Starting media playback
Supported formats and data storage media
Surprise mix
Using the keyword search

Medical aids

Memory function

Outside mirrors
Seat

Menu (on-board computer)

Overview

Menus (driver display)

Assistant display
Classic menu
Navigation
Operating
Service

Understated menu

Mercedes-Benz Connect

Accident and Breakdown Management Digital Extras

Information

Transferred data

Mercedes-Benz emergency call system, Call for help, Emergency call

Automatic emergency call

Availability

Data transfer

Manual emergency call

Overview

Self-diagnosis

Mercedes-Benz GenuineParts

Mercedes-Benz service centre

Mercedes-Benz Support calls

Arranging a service appointment

Calling via the overhead control panel

Consent to data transfer

Information on the call via the overhead control panel

Mercedes-Benz Support

Transferred data

Message memory

Messages, Short messages

Calling a message sender

Deleting

Forwarding

MBUX voice commands

Overview
Read-aloud function
Reading
Setting the displayed text messages
Using a phone number or URL

Mirror

adjusting/setting anti-dazzle mode (outside mirrors)

Mirrors

digital inside rear-view mirror
Rear visibility

Mobile phone

Cancelling permission for Internet connection
Charging
Frequencies
Maximum transmission output
Notes on wireless charging
Smartphone integration
Telephone
Wireless charging (rear passenger compartment)

Modification

Limited protection

Modifications

Motorway mode

Mounting a load

MULTIBEAM LED

Active light function
Bad weather light

City lighting
Cornering light
Dynamic low beam
Enhanced fog light function
Motorway mode
Topographical compensation

Multimedia system

Activating/deactivating voice amplification to rear

Music online

Calling up
Calling up the settings
Search function

N

Navigation

- Activating
- Destination entry
- MBUX voice commands
- Menu (driver display)
- Overview
- Updating the map data

Navigation announcements

- Activating/deactivating
- Adjusting the volume
- Repeating
- Switching audio fadeout on/off

Near Field Communication (NFC)

- Connecting a mobile phone to the MBUX multimedia system
- Information
- Switching mobile phones
- Using a mobile phone

Near-field communication

- Activating/deactivating

NFC

Notifications Centre

- Calling up a notification
- Editing a notification

Message types
Overview
Selecting actions

O

Objects in the vehicle interior

Limited protection

Occupant safety

Airbag

Automatic measures after an accident

Basic information

Child seat

Information on the child restraint system

Information on the correct seat position

Passive occupant presence reminder

Pets in the vehicle

PRE-SAFE®

Pregnancy (seat belt)

Off-road menu

Overview

Setting

On-board computer

Displaying the service due date

On-board diagnostic interface

On-board electronics

Engine electronics

Fitting two-way radios

Onboard Logic Unit

Data storage

Online services

Online services

Open Source Software

Opening angle

Limiting (EASY-PACK tailgate)

Opening/closing the bonnet

Operating fluids

AdBlue®

Additives (fuel)

Brake fluid

Diesel

Engine oil

Notes

Notes on coolant (engine)

Petrol

Refrigerant (air conditioning system)

Windscreen washer fluid

Operating permit number (EC)

Operating safety

48 V on-board electrical system

Changes in the engine output

Information

Outside mirrors

Adjusting/setting anti-dazzle mode

automatic anti-dazzle mode

Blind Spot Assist

Folding in/out

Memory function

Setting options

Overhead control panel

Adjusting the interior lighting

Overview

P

Paint code

Panorama sliding sunroof

- Notes
- Opening/closing
- Opening/closing the roller sunblind
- Problems

Park position

- Engaging
- Engaging automatically

Parking

- Active Parking Assist
- PARKTRONIC

Parking Assist

- Active Parking Assist
- PARKTRONIC

Parking Assist PARKTRONIC

- Activating/deactivating
- Function
- Setting warning tones

Parking assistance systems

- Active Parking Assist
- Drive Away Assist
- Manoeuvering brake function

PARKTRONIC

Parking brake (electric)

Parking lights

Activating/deactivating

Replacing light bulbs

Parking option

Displaying on the map

Parking service

Displaying a parking option on the map

Selecting parking options

Parking space

Finding

Parking up

PARKTRONIC

PASSENGER AIR BAG

Status display, front passenger air-bag

Passive occupant presence reminder

Activating/deactivating

Function

Period out of use

Activating/deactivating standby mode

Permissible axle load

Permissible gross mass

Permitted towing methods

Petrol

Pets in the vehicle

PIN protection

System PIN protection

Plastic trim (care)

POI

Selecting

POI symbols

Selecting

Post-collision brake

Power display

Power supply

Start/stop button

Switching on (start/stop button)

PRE-SAFE®, Anticipatory occupant protection

Function

Reversing measures

Pregnancy

Information on the correct seat position

Seat belt

Protection

Information (how the restraint system works)

Limited

Protection against collision

Manoeuvering brake function

Pulling

Towing methods

Pulling away

Q

QR code for rescue card

Qualified specialist workshop

R

Radar and ultrasonic sensors

Damage

Radio

Activating

Activating/deactivating radio text

Calling up the station list

Deleting stations

Displaying radio text

Editing station presets

Entering a frequency directly

Managing favourites

MBUX voice commands

Menu

Moving stations

Overview

Searching for a channel

Setting a channel

Setting the frequency band

Storing radio stations

Radio (audio system)

Switching traffic announcements on/off

Radio connection

Key

Radio regulations
- Importer information
- Regulatory radio identification
- Specific absorption rate
- Wireless applications

Rain sensor
- Setting

Range
- AdBlue®

Rated tensile force of tie-down eyes

REACH regulation

Rear and load compartment lamps
- Replacing illuminants

Rear bench seat
- Adjusting the seat backrest (comfort rear bench seat)
- Installing/removing (comfort rear bench seat)
- Installing/removing (standard rear bench seat)
- Using the EASY-ENTRY easy entry and exit feature

Rear Cross Traffic Alert, Cross traffic warning
- Function

Rear fog light

Rear luggage rack
- Notes

Rear seat
- Adjusting the seat backrest
- EASY-ENTRY easy entry and exit feature
- Fitting/removing

Luxury rear seat
Switching seat heating on/off

Rear seat belt

Status indicator

Rear seat belt status display

Rear seating

Bench seat anchorage
Notes on pyrotechnics
Removing and inserting electrical connector
Seating variants

Rear visibility

automatic anti-dazzle mode

Rear window

Opening/closing
Programming the key button

Rear window wiper

Activating/deactivating

Rearward-facing child seat

Information

Recycling

Refrigerant

Refrigerant (air conditioning system)

Refuelling

Displaying the AdBlue® level
Refuelling the vehicle
Topping up AdBlue®

Registration

Regulating headlamp range

Remote control (stationary heater/ventilation)

- Displays
- setting

Remote control (stationary heating/ventilation)

- Replacing the battery

Removing/fitting load protection net

Replacement key, Spare key

Replacing illuminants

- Illuminant (rear)
- Mirror lamp
- Rear and load compartment lamps
- Signal and ambient lamp in the tailgate
- Surround lighting
- Tail lamp

Replacing light bulbs

- Daytime running lights
- High beam
- Light sources (front)
- Low beam
- Notes
- Standing/parking lights
- Turn signal light

Rescue card QR code

Resetting

- MBUX reset function

Residual heat utilisation

Responsibility

Driving safety systems

Restraint system

Basic information

Basic instructions for children

Deployment situations

Functionality

Information on mode of operation

Information on the correct seat position

Limited protection

Malfunction

Protection

Self-test

Warning lamp

Restricting the shift range

Reversing camera

Care

Function

Open camera cover (360° Camera)

Opening the camera cover

Rims (care)

Roll away protection

Roller sunblind

Panorama sliding sunroof

Roof load

Roof luggage rack

Load

Notes

Route

Accepting a detour recommendation

Alternative route

Calculating

Calculating alternative routes

Commuter route

Displaying destination information

Displaying the route list

Editing a stored route

Navigation

Planning

Recording

Saving a recorded route

Selecting a type

Selecting notifications

Selecting options

Starting a saved route

Starting the automatic service station search

Switching the automatic filling station search on/off

Route guidance

Cancelling

Changing direction

Destination reached

Lane recommendations

Motorway information

Notes

Off-road

Route guidance with augmented reality

Activating

Displaying road names/house numbers

Overview

Route-based

speed adaptation

Route-based speed adaptation

Function

Setting

Running-in notes

S

Safety system

Safety vest

Satellite map

Searching for a channel

Seat

- 4-way lumbar support
- Adjusting electrically
- Adjusting manually
- Adjusting the armrest
- Adjusting the head restraint electrically
- Adjusting the head restraint manually
- Bench seat anchorage/
- Centre airbag (driver's seat backrest)
- Correct driver's seat position
- Door control panel
- Installing/removing (rear bench seat)
- Memory function
- rotating (front seat)
- Seating variants in the rear
- Switches the seat heating on/off

Seat belt

- Activating/deactivating seat belt adjustment
- Adjusting the height
- Automatic tightening

Cleaning
Fastening
Notes on wearing correctly
Rear seat belt status display
Releasing
Warning lamp
Wearing during pregnancy

Seat belt adjustment

Activating/deactivating

Function

Seat belt tensioners

Inflating

Seat belt warning

Seat cover (care)

Seat ventilation

Activating/deactivating

Seat ventilation in the rear

Activating/deactivating

Seat/bunk combination

Bench seat anchorage
Fitting/removing stowage compartment
Installing/removing
Operating
Seating variants
Using the bed extension

Seats

Pyrotechnics

Removing and inserting

Second telephone

Connecting

Securing loads

Load protection net

Tie-down eyes

Securing luggage

Select transmission position, Drive position

Selector lever

Self-test

Automatic front passenger airbag shutoff

Restraint system

Sensors

Care

Information

Service

Function

Menu (driver display)

Service centre

Service interval display

Service station search

Starting automatic search

Setting the air distribution

Setting the airflow

Setting the date format

Setting the distance unit

Settings
- Information

Shifting, Selecting a gear
- Gearshift recommendation (manual shifting, automatic transmission)

Short-distance trips

Shunting assistant

Side window
- Problems

Side windows
- Close with key
- Convenience closing
- Convenience opening
- Opening with the key
- Opening/closing
- Resetting

Sliding door
- Child safety lock
- electric sliding door
- Function
- Opening/closing (from the inside)
- opening/closing (from the outside)

Sliding sunroof

Smartphone integration
- Apple CarPlay®/Android Auto

Snow chains, Anti-skid chains

Socket
Trailer hitch
Socket (12 V), 12 V socket
Sound settings
Adjusting treble, mid-range and bass settings
Automatic loudness normalisation
Calling up the sound menu
Setting the balance and fader
Spare parts
Spare wheel
Fitting/removing
Notes
Specialist workshop
Specific absorption rate (SAR)
Speed
Limit, Limiter
Speed control
Active Distance Assist DISTRONIC
Cruise control
Limiter
Speed limit
Winter tyres
Speed Limit Assist
Adjusting
Function
System limits
Speedometer

Standing lights
- Activating/deactivating
- Replacing light bulbs

Start-off Assist

Start/stop button
- Starting the vehicle
- Switching on the power supply / vehicle

Starting-off aid
- Drive Away Assist
- Hill Start Assist

Station
- Deleting
- Entering a frequency directly
- Managing favourites
- Moving
- Setting
- Storing

Station list
- Calling up

Station presets
- Editing

Stationary heater/ventilation
- Auxiliary warm-air heater
- Hot-water auxiliary heater
- Notes

Status display

Front passenger airbag

Steer Assist

Active Steering Assist

Steering wheel

Adjusting

Driver's airbag

Steering wheel heater

Steering wheel gearshift paddles, Shift paddles

Steering wheel heater

Activating/deactivating

Stopping the alarm

Storing

a speed, cruise control

a speed, DISTRONIC

a speed, limiter

Stowage areas

Notes

Stowage compartment (rear)

Jack

Vehicle tool kit

Stowage space

Armrest stowage compartment

Bottle holder

Glasses compartment

Glove compartment

Notes

Stowage compartment (seat/bunk combination)
Stowage compartment in the centre console

Streaming online music

Suggestions

Configuring
Deleting

Sulphur content, Fuel (petrol)

Summer tyres

Sun visor

Mirror lamp
Operating

Surround lighting

Activating/deactivating
Replacing illuminants

Suspension

AIRMATIC function
Setting the suspension level (AIRMATIC)

SVHC

Substances of very high concern

Switch clock

Overview
Setting
setting (auxiliary warm-air heater)
Setting the departure time
Setting the temperature/operating duration
Switching immediate heating mode on/off

Switch-off delay time
- Exterior
- Interior

Switches the seat heating on/off

Switching air-recirculation mode on/off

Switching the rear seat heating on/off

Switching the rear window heater on/off

Switching the sound on/off

Synchronisation function
- Activating/deactivating (control panel)

System PIN protection
- Activating/deactivating

System settings
- Activating/deactivating system PIN protection
- Activating/deactivating voice amplification to rear
- MBUX reset function
- Setting the distance unit
- Setting the time zone
- Setting the time/date format
- Switching near-field communication (NFC) on or off
- Transmission of the vehicle position

T

Table

Tail lamp (replacing illuminants)

Tailgate

- EASY-PACK tailgate
- Opening angle (EASY-PACK)
- Opening in an emergency
- Opening/closing
- opening/closing (EASY-PACK)
- Signal and ambient lamp in the tailgate

Tailpipes (care)

Take-back of end-of-life vehicles

Tank content

- AdBlue®
- Fuel
- Reserve

Technical data

- Coolant filling capacity
- Engine oil filling capacity
- Information
- Mounting dimensions (trailer hitch)
- Notes on the trailer hitch
- Radio regulations
- Specific absorption rate (SAR)

Tank content and fuel reserve
Vehicle identification plate

Technical data®

AdBlue filling quantity

Telephone, Smartphone

Activating functions during a call
Calls with several participants
Changing a function
Charging wirelessly (mobile phone)
Connecting a mobile phone
Connecting a mobile phone (Near Field Communication (NFC))
Disconnecting a mobile phone
Importing contacts
Importing contacts (overview)
Incoming call during an existing call
Information
Interchanging mobile phones
MBUX voice commands
Notes
Notes on wireless charging (mobile phone)
Operating modes
Reception and transmission volume
Secure Simple Pairing
Setting the ringtone
Smartphone integration
Switching mobile phones (Near Field Communication (NFC))
Telephone menu overview

Telephone operation
Using Near Field Communication (NFC)
Voice recognition
Wireless charging (mobile phone, rear)

Telephone (audio system)

Replacing a mobile phone

Telephony operating modes

Bluetooth® telephony

Television, Digital TV

MBUX voice commands

Temperature

Setting

TEMPMATIC (operating unit)

Text messages

THERMOTRONIC (control panel)

Tie-down eyes

Fitting/removing

Load

Time

Manual time setting
Setting the time zone
Setting the time/date format

Tone settings, Sound

Information

Top Tether

Topographical compensation, Predictive headlamp range control

Topping up the windscreen washer system

Touch Control

- Driver display
- MBUX
- Setting the sensitivity

Touchpad

- Operating

Touchscreen

- Entering characters

Tow-away protection

- Activating/deactivating
- Function

Tow-starting

Towing

- both axles on the ground

Towing eye

- Fitting/removing
- Storage location

Towing methods

Traffic announcements (audio system)

- Switching on/off

Traffic information

- Car-to-X-Communication
- Displaying the traffic map
- Displaying traffic incidents
- Extending a Live Traffic Information subscription
- Information on Live Traffic Information

Overview
Registering Live Traffic Information

Traffic light view

Function

Traffic Sign Assist

Function
Setting

Trailer hitch

Attaching the ball coupling
Care
Coupling/uncoupling a trailer
Fitting the cover for trailer coupling
Information about trailer operation
Mounting dimensions
Notes
Removing the ball neck
Socket
Trailer Manoeuvering Assist

Trailer loads

Trailer Manoeuvering Assist

Function

Trailer Manoeuvring Assist, Manoeuvring assistant

Operation

Trailer operation

Active Lane Keeping Assist
Attaching the ball coupling
Coupling/uncoupling a trailer

Notes
Removing the ball neck
Setting (MBUX multimedia system)
Socket
Trailer loads

Trailer stabilisation

Transferred vehicle data

Android Auto
Apple CarPlay®

Transmission position display

Transport (vehicle)

Transport by rail

Trim element (care)

TuneIn

Deleting stations
Logging out
Overview
Registering
Saving stations
Selecting and connecting a station
Selecting stream
Setting options

Turn signal light

Replacing light bulbs

Turn signal lights

Operating the combination light switch

TV

MBUX voice commands

Two-way radios

Frequencies

Installation

Maximum transmission output

Tyre pressure

Checking manually

Notes

Restarting the tyre pressure monitoring system

Tyre pressure table

Tyre pressure monitoring system

Checking air pressure

Checking temperature

Function

Tyre pressure table

Tyre temperature

Checking

Tyre pressure monitoring system

Tyre tread

Tyres

Checking

Checking temperature

Direction of rotation

Fitting

M+S tyres

Mounting

Noise
Removing
Replacing
Restarting the tyre pressure monitoring system
Selection
Snow chains
Storing
Summer tyres
Tyre pressure monitoring system
Tyre pressure table
Unusual handling characteristics
Wheel size categories
Wheel/tyre combination

U

Understated menu display content
Selecting
Unfastening
Units of measurement
Setting
Unlocking setting
Updating software, System update, Update
Error message
Information
Performing
USB port
USB port (multimedia system)
Connecting devices
User profiles, Personalisation
Adding a user
Notes
Overview
Requirements for use
Selecting a user
Selecting options
Synchronising
User-specific content
Using kickdown, Acceleration

V

Variable limiter

Vehicle, Switching on the ignition

- 48 V on-board electrical system
- Activating/deactivating standby mode
- Activating/deactivating the automatic locking mechanism
- Correct use
- Data storage
- Deactivating

Diagnostics connection

Identification plate

Implied warranty

loading

lock automatically

lock automatically (MMS)

Locking/unlocking (from the inside)

Locking/unlocking emergency key

Lowering

Medical aids

Parking

Parking up

QR code for rescue card

Raising

REACH regulation

Registration

Standby mode function
Starting (emergency operation mode)
Starting (start/stop button)
SVHC/substances of very high concern
Switching on (start/stop button)
Towing away
Ventilating (convenience opening)
Voice commands for MBUX voice assistant

Vehicle cameras

Vehicle data

Display, MBUX
Displaying, DYNAMIC SELECT
Transferring to Android Auto
Transferring to Apple CarPlay®
Vehicle height
Vehicle length
Vehicle width
Wheelbase

Vehicle dimensions

Vehicle emergency start

Vehicle identification number

Vehicle identification plate

Vehicle information

Displaying

Vehicle key

Vehicle level

AIRMATIC function

Setting (AIRMATIC)

Vehicle location

Switching transmission on/off

Vehicle position

Storing

Vehicle sensors

Vehicle tool kit, Tool

Jack

Stowage compartment (rear)

Towing eye

VIN

Vision

Demisting windows

Voice amplification to the rear

Activating/deactivating

Voice assistant

Voice prompting

Voice recognition

Volume

Setting

W

Warning system

Warning triangle

Removing

Setting up

Warning/indicator lamp

ABS warning lamp

Active Brake Assist warning lamp

Brakes warning lamp (red)

Coolant warning lamp

Door indicator lamp

Electrical fault warning lamp

Engine diagnostics warning lamp

Engine operating temperature warning lamp

ESP® OFF warning lamp

ESP® warning lamp flashes

ESP® warning lamp lights up

Fuel reserve warning lamp

Parking brake indicator lamp (red)

Parking brake indicator lamp (yellow)

Power steering warning lamp (red)

Reduced-power warning lamp

Restraint system warning lamp

Seat belt warning lamp flashes

Seat belt warning lamp lights up

Suspension warning lamp (red)
Suspension warning lamp (yellow)
Trailer hitch warning lamp
Tyre pressure monitoring system warning lamp flashes
Tyre pressure monitoring system warning lamp lights up
Warning lamp for distance warning

Warning/indicator lamps

Notes
Overview

PASSENGER AIR BAG

Washer fluid

Notes

Washing by hand

Washing the engine

Wear

Limited protection

Weather information

Web browser

Calls up options
Deleting browser data

Web browsers

Calling up a web page
Calling up the settings
Deleting a bookmark
Managing bookmarks
Setting in the background

Website
- Mercedes-Benz Connect
- Setting up a Wi-Fi hotspot

WET WIPER SYSTEM

Wheel rotation

Wheels
- Care
- Changing
- Checking
- Checking air pressure
- Checking temperature
- Fitting
- Flat tyre
- Mounting
- Noise
- Removing
- Replacing
- Restarting the tyre pressure monitoring system
- Selection
- Snow chains
- Storing
- Technical data
- Tyre pressure
- Tyre pressure monitoring system
- Tyre pressure table
- Unusual handling characteristics
- Wheel size categories

Wheel/tyre combination

Wi-Fi

Activating/deactivating

Information on connection

Setting up a hotspot

Setting up an Internet connection

Window airbag

Windows

Care

Opening/closing

Removing mist

Windscreen washer fluid

Notes

Windscreen wipers

Activating/deactivating

Replacing the wiper blades (WET WIPER SYSTEM)

Replacing the wiper blades (windscreen)

Replacing wiper blades (rear window)

Switching on/off (rear window)

Switching on/off (windscreen)

Winter operation

Winter tyres

Limiter

Notes

Setting the permanent speed limit

Wiper blades

Care

replacement (windscreen)
Replacing (rear window)
Replacing (WET WIPER SYSTEM)
Wireless applications
Wireless charging
Mobile phone
Mobile phone (rear)
Notes
Workshop

Publication details

INTERNET
Further information about Mercedes-Benz vehicles and about Mercedes--Benz AG can be found on the following websites:

https://www.mercedes-benz.com

https://group.mercedes-benz.com

DOCUMENTATION TEAM
You are welcome to forward any queries or suggestions you may have regarding this Owner's Manual to the technical documentation team at the following address:

Mercedes-Benz AG, HPC: CAC, Customer Service, 70546 Stuttgart, Germany

©Mercedes--Benz AG: Not to be reprinted, translated or otherwise reproduced, in whole or in part, without written permission from Mercedes--Benz AG.

VEHICLE MANUFACTURER
Mercedes-Benz AG

Mercedesstraße 120

70372 Stuttgart

Germany

F447 0092 02