Disclaimer

All language versions of the following PDF document for this vehicle model relate solely to vehicles intended for sale on the German market and which correspond to German regulations.

Please contact your authorised Mercedes-Benz Service Centre to obtain a printed version for other vehicle models and vehicle model years. This PDF document is the latest version. Possible variations to your vehicle may not be taken into account as Mercedes-Benz constantly updates their vehicles to the state of the art and introduces changes in design and equipment. Please therefore note that this PDF document in no way replaces the printed version which was delivered with your vehicle.



Mercedes-Benz



Sprinter

Operating Instructions

Mercedes-Benz

Symbols

⚠	Warning
	Environmental note
❗	Possible vehicle damage
ℹ	Tip
▶	A prompt to act
▷	Continuation symbol
(▷ page)	Page reference
`Display`	Messages in the display and in the monitor of the reversing camera

Welcome to the world of Mercedes-Benz.

Before you drive off, familiarise yourself with your vehicle and read these Operating Instructions. This will help you to obtain the maximum pleasure from your vehicle and avoid endangering yourself and others.

The equipment or model designation of your vehicle may differ according to:

- model
- order
- country variant
- availability

Individual warning and indicator lamps may not be functional.

The illustrations in these Operating Instructions show a left-hand-drive vehicle. For right-hand-drive vehicles, the layout of car parts and controls varies accordingly.

Mercedes-Benz is constantly updating its vehicles to the state of the art.

Mercedes-Benz therefore reserves the right to introduce changes in the following areas:

- design
- equipment
- technical features

You cannot therefore base any claims on the illustrations or descriptions in this manual.

The following are integral parts of the vehicle:

- Operating Instructions
- Maintenance Booklet
- Supplements relating to vehicle equipment

Keep these documents in the vehicle at all times. When you sell the vehicle, always pass the documents on to the new owner.

You can get to know the important features of your vehicle in German and in English in the interactive Operating Instructions on the Internet at:

www.mercedes-benz.de/betriebsanleitung-transporter

The technical documentation team at Daimler AG wishes you safe and pleasant motoring.

9065847272

Index 4

Introduction 17

At a glance 23

Safety 33

Controls 53

Operation 171

Practical advice 213

Technical data 287

1, 2, 3 ...

4ETS
see Electronic Traction System (4ETS) 136

A

ABS
see Anti-lock Braking System (ABS) 129
Acceleration skid control (ASR) 134
Display message 235
Indicator lamp 220
Warning lamp 134, 219
Accessories and conversions
see Add-on equipment 21
see Add-on equipment
Active Service System
see ASSYST service interval display
Adapter cable 184
Adaptive brake lamps 130
Adaptive ESP®
see Electronic Stability Program (ESP®) 135
Additional heating
see Auxiliary heating
Additional turn signal lamps
Changing bulbs 271, 274
Add-on equipment 21, 288
Body/equipment mounting directives for trucks 21
ADR
Working speed governor (ADR) 141
Airbags
Driver's 40
Front passenger 40
System 38
Thorax sidebag 40
Triggering 37
Windowbag 41
Air conditioning
General notes 108
Misted-up windows 114
Air-conditioning system
Air vents in the roof duct 112
see Climate control
Air-conditioning system in the rear compartment
see Climate control
Air distribution
Setting 113
Air filter
Display message 239
Indicator lamp 226
Airflow
Setting 113
Air pressure
see Tyre pressure 49, 290
Air-recirculation mode 114
Air suspension
see Electronic level control (ENR) .. 159
Air vents
Setting 111
Alarm system
see ATA
All-wheel drive 136
Antifreeze additives
see Coolant 188
Anti-lock Braking System (ABS) 129
Display message 232
Indicator lamp 220, 221
Armrests 77
Ashtray 161
ASR
see Acceleration skid control (ASR)
ASSYST
see ASSYST service interval display
ASSYST service interval display 199
ATA (Anti-Theft Alarm system)
Activating/deactivating 70
Function 70
Malfunction 244
Switching off the alarm 70
Attachments
see Add-on equipment 21
Audible warning signal 244
Automatic car wash 196
Automatic headlamp mode 100
Automatic locking 56
Automatic transmission 131
Driving tips 133
Malfunction 246
One-touch gearshifting 132

Releasing the parking lock manually ... 280
Shift ranges ... 133
Auxiliary heating
Activating the timer ... 120
Before switching on ... 116
Fault ... 249
Heater booster function ... 123
Maintenance ... 206
Note with regard to selling the vehicle ... 206
Remote control ... 118, 277
Safety notes ... 115
Setting the heating level (timer) ... 122
Setting weekday, time and operating duration (timer) ... 121
Switch ... 116
Switching immediate heating mode on/off (timer) ... 121
Switching the remote control on/off ... 118
Switch-on time ... 116, 121
Synchronising the remote control ... 119
Timer ... 120

B

BAS
see Brake Assist (BAS) ... 130
Battery ... 207
Changing (auxiliary heating remote control) ... 277
Changing (key) ... 276
Charge indicator lamp ... 223
Charging ... 210
Disconnecting ... 208
Display message ... 236
Isolating switch ... 98
Note on care ... 211
Reconnecting ... 211
Removing/fitting ... 210
Belt force limiters ... 38
Triggering ... 37
Belt tensioners ... 38
Triggering ... 37
Bio-diesel ... 190
Bi-xenon headlamps
Driving abroad ... 172
Bleeding the fuel system ... 256
Bonnet
Opening/closing ... 200
Bottle holder ... 165
see Cup holders
Brake Assist (BAS) ... 130
Display message ... 235
Warning lamp ... 220
Brake fluid ... 187
Display message ... 236
Fluid level ... 202
Warning lamp ... 220
Brake lamps
Adaptive ... 130
Changing bulbs ... 272, 273
Brake linings
Display message ... 236
Indicator lamp ... 223
Brake system
Brake temperature monitor ... 138
Driving safety systems ... 129
Fluid level ... 202
Malfunction ... 235
Warning lamp ... 220
Brake temperature monitor ... 138
Breakdown
see Flat tyre

C

Camera
see Reversing camera ... 153
Capacities ... 301
Care of the vehicle ... 193
CD player/CD changer ... 86
Central locking ... 56
Automatic locking ... 56
Emergency unlocking ... 277
Enhanced central locking system ... 57
Malfunction ... 251
Vehicle key ... 54
Central locking system
Enhanced central locking system ... 57
Centre console ... 29
Changing bulbs ... 268
Additional turn signal lamp ... 271, 274
Display message ... 241
Doorway lamp ... 275

Exterior lighting 269
Headlamps 269
Indicator and warning lamps 228
Interior light 275
Perimeter lamp 274
Side marker lamp 274
Tail lamp 272, 273
Chassis number
see Vehicle identification number .. 290
Child
Seats 42
Child-proof locks
Doors 47
Children
in the vehicle 42
ISOFIX child seat securing system ... 46
Restraint systems 42
Child seat 42
ISOFIX 46
Recommendations 45
Suitable positions 44
TopTether 47
Cigarette lighter 162
Cleaning
After driving off-road or on construction sites 197
Automatic car wash 196
Cleaning the engine 197
High-pressure cleaning 196
Light alloy wheels 197
Vehicle exterior 194
Vehicle interior 193
Cleaning and care 193
Climate control
Adjusting the air vents 111
Air conditioning 109
Air conditioning in the rear compartment 110
Air-recirculation mode 114
Cleaning the air filter 205
Control panels 107
Cooling with air dehumidification . . 111
Demisting the windows 113
Heating 109
Heating in the rear compartment ... 110
Rear-compartment air conditioning 110
Rear-compartment heating 110
Reheat function (air dehumidification) 114
Setting the air distribution 113
Setting the airflow 113
Setting the temperature 111
Switching air-recirculation mode in the rear compartment on/off 114
Switching on/off 110
Cockpit 24
Combination switch 101
Constant headlamp mode 99
Setting (vehicles without steering-wheel buttons) 82
Setting (vehicles with steering wheel buttons) 92
Consumption statistics (vehicles with steering wheel buttons) 94
Control panel
Above the windscreen 30
Conversions and accessories
see Add-on equipment 21
see Add-on equipment
Coolant 188
Display message 238
Expansion tank 201
Level 201
Temperature gauge (vehicles with steering wheel buttons) 85
Topping up 201
Warning lamp 225
Cornering lamps 101
Changing bulbs 270
Correct use 21
Cruise control 145
Display message 235
Malfunction 249
Cup holders 165

D

Dashboard lighting
see Instrument lighting 80
Data stored in the vehicle 22
Daytime driving lights
see Constant headlamp mode
Delayed switch-off 93
Diagnostics connection 20

Diesel
Consumption 174, 300
Fuels 190
Low outside temperatures 192
Reserve fuel warning lamp 80, 225
Tank capacity 301
Diesel engine
Preglow indicator lamp 225
Winter operation 192
Diesel particle feature
Display message 232
Diesel particle filter 20
Indicator lamp 226
Digital speedometer 19
Setting the unit (vehicles with steering wheel buttons) 89
Digital total distance recorder 19
Dipped-beam headlamps 99
Automatic headlamp mode 100
Changing bulbs 270
Constant headlamp mode (vehicles without steering wheel buttons) 82
Constant headlamp mode (vehicles with steering wheel buttons) 82, 92
Driving abroad 172
Direction of rotation, tyres 51
Display
Display messages 229
Outside temperature (vehicles with steering wheel buttons) 85
Outside temperature display (vehicles without steering wheel buttons) 81
Standard display (vehicles without steering wheel buttons) 81
Standard display (vehicles with steering wheel buttons) 85
see Warning and indicator lamps
Distance recorder
see Odometer 81
Door lock
see Central locking 56
Doors
Control panel 31
Display message 240
Emergency unlocking 277
Indicator lamp 228
Locking/unlocking with key 54
Opening (from the inside) 58
Rear door (crewcab) 65
see Central locking 56
Doorway lamp
Changing bulbs 275
Drinks holder
see Cup holders
Driver's door and co-driver's door 58
Driving abroad 172
Driving off-road 172
Driving safety system
4ETS 136
Starting-off aid 134
Driving safety systems
ABS 129
Adaptive brake lamps 130
ASR 134
BAS 130
EBV 130
ESP® 135
Tyre pressure monitor 139
Driving system
ECO-Start 144
Driving systems 145
Cruise control 145
Malfunctions 247
PARKTRONIC 151
Reversing camera 153
SPEEDTRONIC 148
Driving tips 172
Driving abroad 172
Pulling away 126
Stopping the vehicle and switching off the engine 128
Trailer towing 183

E

E/e mark 289
EBD
see Electronic brake force distribution (EBV) 130
ECO-Start 142, 144
Electrical/electronic equipment
Communications equipment 166
Retrofitting 289

Electrical closing assist 59
Electrical step
Cleaning and care 194
Display message 237
Entry and exit 63
Indicator lamp 228
Manual retraction 279
Electrical system 98
Electric hinged windows 69
Electric sliding door 59
Malfunction 253
Resetting 62
Unlocking manually 278
Electromagnetic compatibility 18
Electronic brake force distribution (EBV) 130
Display message 237
Warning lamps 220
Electronic level control (ENR) 159
Display message 238
Indicator lamp 228
Malfunction 247
Electronic Stability Program (ESP®) 135
Display message 233
Electronic Traction System (4ETS) . 136
Indicator lamp 220, 222
Warning lamp 219
Electronic Traction System (4ETS) .. 136
Emergency equipment 214
Emergency key element 54, 277
Emergency unlocking
Vehicle 277
Engine
Changing the power output 19
Diagnostics, indicator lamp 226
Display message 241
Electronics 288
Maximum speeds 290
Number 290
Operating safety 19
Power take-off 141
Starting the engine with the key 124
Wash 197
Engine oil 187
Checking the oil level (on-board computer) 203
Checking the oil level using the dipstick 204
Consumption 174
Display message 239
Mixing 188
Oil change 187
SAE classification 187
Topping up 205
Warning lamp 223
Engine oil filler neck 201
Enhanced central locking system 57
ENR
see Electronic level control (ENR) .. 159
Error memory
see Message memory (vehicles with steering wheel buttons) 87
ESP®
see Electronic Stability Program (ESP®) 135
ESP® trailer stabilisation 135
Exhaust filter
see Diesel particle filter
Exterior lighting
Changing bulbs 268
Constant headlamp mode (vehicles without steering wheel buttons) 82
Constant headlamp mode (vehicles with steering wheel buttons) 92
Delayed switch-off (vehicles with steering wheel buttons) 93
Light switch 99
Locator lighting (vehicles with steering wheel buttons) 92
Surround lighting (vehicles with steering wheel buttons) 92
Exterior mirrors 78

F

Fire extinguisher 216
First-aid kit 216
Flat tyre
Notes 257
Wheel change 263
Flow improvers 192
Folding seat 76
Folding table 165

Front foglamps 100
Changing bulbs 270
Front windscreen
see Windscreen 195
Fuel
Additives 192
Consumption 174, 300
Diesel 190
Display message 240
Petrol 189
Fuel filter with water separator 255
Indicator lamp 227
Fuel gauge 80
Fuel sulphur content
Table 191
Fuel tank capacity
Range (vehicles with steering wheel buttons) 95
Reserve, display message 240
Reserve fuel warning lamp 225
Fuses 276

G

General driving tips 127
General safety notes 48
Genuine parts 288
Glove compartment 164

H

Handbrake
see Parking brake 131
Hazard warning lamps 102
Headlamp flasher 101
Headlamp range 100
Headlamps
Changing bulbs 269
Cleaning 195
Cleaning system 105, 202
Misted up 254
Headlamps, automatic 100
Head restraints 76
Heater booster function 123
Heating
see Climate control
High-pressure cleaning 196

I

Ignition lock 58
Immobiliser 70
Indicator and warning lamps
ENR 228
Overview 27
Tyre pressure monitor 227
Indicator lamps
see Warning and indicator lamps 27
Instrument cluster 79
Lights 80
Rev counter 80
Speedometer 80
Instrument lighting 80
Interior light
Changing bulbs 275
Interior lighting
Changing bulbs 268
Front 102
Rear 103
Interior motion sensor 71
ISOFIX child seat securing system 46
TopTether 47

J

Jack 214
Jacking points 265
Preparation 265
Jump-starting 280
Jump-starting connection point in the engine compartment 280

K

Key 54
Changing the battery 276
Display message 240
Ignition lock positions 58
Malfunction 251
KEYLESS ENTRY 62
Kickdown 133

L

Language
Display (vehicles with steering wheel buttons) ... 90
Lashing eyelets ... 179
Fitting ... 181
Permissible tensile load ... 297
Lashing points and lashing materials
Permissible tensile load ... 297
Lashing points and materials ... 179
Level control
see Electronic level control (ENR) .. 159
License plate lamp
Changing bulbs ... 272, 273
Lights
Automatic headlamp mode ... 100
Changing bulbs ... 268, 269
Combination switch ... 101
Constant headlamp mode ... 82, 92, 99
Cornering light function ... 101
Headlamp range control ... 100
Instrument ... 80
Interior lighting ... 102, 103
Light switch ... 99
LIM indicator lamp
Cruise control ... 146
SPEEDTRONIC ... 148
Load distribution ... 178
Loading guidelines ... 176
Loading tailgate
Cleaning ... 194
Loads
Securing ... 179
Transporting ... 176, 178
Locator lighting
Setting (vehicles with steering wheel buttons) ... 92
Locking
Automatic ... 56
With button ... 56
With key ... 54
Locking system
see Central locking ... 56
see Key ... 54
Troubleshooting ... 251

M

Main-beam headlamps ... 101
Changing bulbs ... 270
Maintenance points under the bonnet ... 201
Malfunctions ... 219
Message memory (vehicles with steering wheel buttons) ... 87
Manual transmission
Engaging reverse gear ... 127
Pulling away ... 126
Shift recommendation ... 126
Starting the engine ... 125
Maximum speed ... 175
Limiting ... 150
Menu (vehicles with steering wheel buttons)
Audio ... 85
Message memory ... 87
Navigation ... 86
Operation ... 85
Settings ... 87
Telephone ... 95
Trip computer ... 94
Mercedes-Benz Service Centre
see Qualified specialist workshop
Message memory (vehicles with steering wheel buttons) ... 87
Messages
Vehicles without steering wheel buttons ... 231
Vehicles with steering wheel buttons ... 232
Mirrors
Exterior mirrors ... 78
Rear-view mirror ... 78
Mobile phone ... 167
Display message ... 240
Installation ... 289
Monitor
see Reversing camera ... 153

N

Navigation device (PND) ... 168

O

Odometer 19, 81
Setting the unit (vehicles with steering wheel buttons) 89
Off-road driving
see Driving off-road 172
On-board computer
Vehicles without steering wheel buttons 81
Vehicles with steering wheel buttons 82
On-board diagnostics interface
see Diagnostic connection
One-touch gearshifting 132
Opening/closing the windows 68
Hinged windows 69
Sliding windows 69
Outside temperature display
Vehicles without steering wheel buttons 81
Vehicles with steering wheel buttons 85
Overhead control panel
Overview 30
Overrevving range 80
Overview
Menus (Vehicles with steering wheel buttons) 84

P

Paper holder 164
Parking
see Stopping the vehicle and switching off the engine 128
Parking aid
see PARKTRONIC
Parking brake 131
Display message 238
Parking lamps 99
Changing bulbs 270, 272, 273
PARKTRONIC 151
Activating/deactivating 153
Cleaning the sensors 195
Indicator lamp 248
Malfunction 248
Roll-back warning 153
Sensor range 151
Trailer towing 153
Warning display 152, 248
Partition sliding door 65
Perimeter lamp
Changing bulbs 273, 274
Permanent SPEEDTRONIC 150
Petrol
Consumption 174, 300
Minimum grade 189
Reserve fuel warning lamp 225
Tank capacity 301
Platform truck dropsides 66
PND
Bracket 168
Mobile navigation device 168
Poly-V-belt
Malfunction 223
Power supply
Battery isolating switch 98
Power take-offs
Engaging/disengaging 141
Technical data 290
Power windows 68
Practical advice
Auxiliary heating 249
Central locking system 251
Engine 245
Fuel and fuel tank 255
Headlamps and turn signals 254
Windscreen wipers 254
Preparing for a journey 123
Checks in the vehicle 124
Visual check of the vehicle exterior 123
Programming
Key 55
Protection of the environment 17

Q

Qualified specialist workshop 19

R

Radio
Changing stations (vehicles with steering wheel buttons) 86
Cleaning the display 193
Setting station selection (vehicles with steering wheel buttons) 93
Rain/light sensor
Setting the sensitivity (vehicles with steering wheel buttons) 94
Windscreen wipers 105
Range (vehicles with steering wheel buttons) 95
Reading lamp 102
Rear bench seat
Folding (crewcab) 74
Installing/removing (crewbus) 75
Stowage compartment (crewcab) .. 163
Rear-compartment air-conditioning system
see Climate control
Rear-compartment heating
see Climate control
Rear doors 63
Rear foglamp 100
Changing bulbs 272, 273
Rear lamp
Changing bulbs 272, 273
Rear-view mirror 78
Rear window heating 106
Malfunction 243
Rear window wiper 105
Reflective safety vest 214
Refuelling 175
Remote control
Auxiliary heating 118
Changing the batteries (auxiliary heating) 277
see Key 54
Replacing bulbs
see Changing bulbs 268, 269
Reserve fuel
Fuel tank 80, 225
Restraint system 34
Airbags 38
Belt force limiter 38
Belt tensioner 38
Child restraint systems 42
Display message 235
Front airbags 40
Malfunction 222
Seat belt 34
SRS 36
Thorax sidebags 40
Windowbags 41
Retreaded tyres 51
Rev counter 80
Reverse gear
Engaging (automatic transmission) 132
Reverse warning device 175
Reversing camera 153
Cleaning 195
Cleaning the monitor 193
Malfunction 249
Monitor menu 155
Switching off the monitor while driving 159
Switching on 154
Switching the monitor on/off 154
Reversing lamp
Changing bulbs 272, 273
Roll-back warning
see PARKTRONIC 153
Roof carrier 181, 297
Roof load (maximum) 297
Roof rack
see Roof carrier 181, 297
Roof ventilator 123
Running in 172

S

SAE classification (engine oils) 187
Safety instructions
General notes 48
Seat
Co-driver's seat 71
Driver's seat 71
Folding seat 76
Luxury seat 71
Rear bench seat 74
Standard seat 71
Suspension seat 71

Swivel seat ... 73
Twin co-driver's seat ... 74
Seat belt ... 34
Adjusting the height ... 36
Belt force limiter ... 38
Belt tensioner ... 38
Cleaning ... 193
Display message ... 238
Fastening ... 36
Warning lamp ... 228
Seat heating ... 77
Malfunction ... 243
Selector lever position ... 132
Service interval display ... 198
Service life, tyres ... 51
Service products
Bio-diesel ... 190
Brake fluid ... 187
Capacities ... 301
Coolant ... 188
Engine oil ... 187
Flow improvers ... 192
Fuel ... 189
Fuel additives ... 192
Settings
Factory (key) ... 55
Resetting all (vehicles with steering wheel buttons) ... 87
Resetting submenus (vehicles with steering wheel buttons) ... 88
Setting the date
Vehicles without steering wheel buttons ... 82
Vehicles with steering wheel buttons ... 91
Setting the time
Vehicles without steering wheel buttons ... 82
Vehicles with steering wheel buttons ... 91
Shift ranges
Automatic transmission ... 133
Shift recommendation ... 126
Side lamps ... 99
Changing bulbs ... 270
Side marker lamp
Changing bulbs ... 274
Side windows
Resetting ... 68
Sliding door ... 58
Cleaning ... 196
Closing assist ... 59
see also Electric sliding door ... 59
Sliding windows ... 69
Snow chains ... 185
Socket ... 166
Spare wheel ... 217
Bracket ... 217
Wheel change ... 263
Specialist workshop ... 19
Spectacles compartment ... 164
Speed
Limiting, see SPEEDTRONIC ... 148
Setting, see Cruise control ... 147
Speed limiter ... 175
Speedometer ... 80
Setting the unit (vehicles with steering wheel buttons) ... 89
SPEEDTRONIC ... 148
Display message ... 231, 233, 235
Malfunction ... 249
Permanent ... 150
Variable ... 148
SRS (Supplemental Restraint System)
Display message ... 235
General information ... 36
Warning lamp ... 37, 222
Starting
see Starting the engine
Starting-off aid ... 134
Display message ... 235
Indicator lamp ... 220
Steering assist
Display message ... 236
Warning lamp ... 229
Steering wheel ... 77
Adjusting ... 77
Buttons (vehicles with steering wheel buttons) ... 82
with buttons ... 29
Step
see Electrical step
Stickers ... 48

Storage, tyres 52
Stowage spaces and compartments 162
Glove compartment 164
Paper holder 164
Spectacles compartment 164
Stowage compartment above the windscreen 163
Stowage compartment in the centre console 163
Stowage compartment in the dashboard 162
Stowage compartment in the door 163
Stowage space above the roof trim 163
Stowage space under the twin co-driver's seat 163
Stowage spaces and stowage compartments
Stowage space under the rear bench seat 163
Submenu (on-board computer)
Clock/Date 91
Convenience 94
Instrument cluster 89
Lighting 92
Selecting 88
Settings overview 88
Vehicle 93
Sulphur content of fuel 191
Supplement Restraint System
see SRS (Supplemental Restraint System)
Surround lighting
Setting (vehicles with steering wheel buttons) 92
Switching off the alarm (ATA) 70
Switch unit
additional 31
Centre console 30
Driver's door 31
Swivel seat 73

T

Tank capacity 80
Technical data
Capacities 301
Fuel consumption 300
Speed 290
Tyre pressure 290
Vehicle dimensions 290
Vehicle weights 290
Telephone 167
Operation (vehicles with steering wheel buttons) 95
Temperature
Setting (climate control) 111
Setting the unit (vehicles with steering wheel buttons) 89
Theft-deterrent system
ATA (Anti-Theft Alarm system) 70
see ATA (Anti-Theft Alarm system)
Tightening torque
Wheel nuts/wheel bolts 267, 296
Time
Setting the clock (vehicles without steering wheel buttons) 82
Setting the time (vehicles with steering wheel buttons) 91
Timer
Auxiliary heating 120
Tools
see Vehicle tool kit 214
Top speed
Technical data 290
TopTether 47
Tow-away protection 70
Towing 283
Towing eye 284
Tow-starting 283
TPMS
see Tyre pressure monitor 139
Trailer
Adapter cable 184
Driving tips 183
Towing 182
Towing with Parktronic 153
Trailer coupling 298

Trailer coupling
Installation dimensions 298
Permitted weights and loads 298
Trailer coupling installation dimensions 298
Trailer coupling overhang dimensions 298
Trailer tow hitch 182, 298
Adapter cable 184
Notes on care 182
Transport by rail 174
Transporting
Load distribution 178
Loading 176
Securing a load 179
Trip computer (vehicles with steering wheel buttons) 94
Trip meter 81
Resetting 80
see Trip distance
Troubleshooting
Automatic transmission 246
Driving systems 247
Turn signals 101
Changing bulbs 270, 271, 272, 273
Two-way radio
Installation 289
Type identification plate
see Vehicle identification plate 290
Tyre pressure
Calling up (vehicles with steering wheel buttons) 139
Display message 231, 234, 240
Monitor 49
Monitoring (on-board computer) 139
Setting the unit (vehicles with steering wheel buttons) 90
Tables 290, 291
Warning lamp 227
Tyres 49
Age 51
Condition 50
Damage 51
Direction of rotation 51
Flat tyre 256
Load-bearing capacity 51
Maximum speed 51
Operating safety 49
Replacing wheels 52
Retreaded 51
Storage 52
Tread 50
Types 51
Tyre valve, snap-in 50
Wear 50
Wheel change 263
Winter 184
Tyre sealant
Storage location 216
Using 257

U

Unlocking
With button 56
With emergency key element 277
With key 54

V

Variable SPEEDTRONIC 148
Vehicle
Assemblies 206
Cleaning 193
Correct use 21
Dimensions 290
Electronics 288
Emergency unlocking 277
Equipment 17
Individual settings (vehicles with steering wheel buttons) 87
Registration 19
Towing 283
Tow-starting 283
Transporting 286
Weights 290
Vehicle identification number 290
Vehicle identification plate 290
Vehicle key 54
Malfunction 251
Vehicle tool kit 214
Voltage supply
Fuses 276

W

Warning and indicator lamps
ABS ... 221
Air filter ... 226
ASR ... 134, 219, 220
BAS ... 220
Battery charge ... 223
Brakes ... 220
Brake wear ... 223
Bulbs ... 228
Clutch pedal ... 229
Coolant ... 225
Diesel particle filter ... 226
Doors ... 228
Electrical step ... 228
Engine diagnostic ... 226
Engine oil level ... 223
ESP® ... 219, 222
LIM ... 146, 148
PARKTRONIC ... 248
Poly-V-belt ... 223
Preglow ... 225
Reserve fuel ... 225
Seat belt ... 228
SRS ... 37, 222
Starting-off aid ... 220
Steering assist ... 229
Washer fluid ... 227
Water separator ... 227
Warning lamp ... 214
Warning tones ... 244
Warning triangle ... 214
Washer fluid
Display message ... 241
Indicator lamp ... 227
Refilling ... 202
Wiping with ... 105
Wear, tyres ... 50
Wheel
Changing ... 263
Replacing ... 52
Spare wheel ... 217
Wheel chock ... 215
Wheel nuts/wheel bolts
Tightening torque ... 267, 296
Wheels
Operating safety ... 49
Windows
Cleaning ... 194
Cleaning the sliding windows ... 194
Cleaning the windscreen ... 195
Washing system ... 105, 202
Windscreen
Cleaning ... 195
Windscreen heating ... 105
Malfunction ... 243
Windscreen wipers ... 104
Malfunction ... 254
Rain/light sensor ... 105
Replacing the wiper blades ... 206
Setting the sensitivity (vehicles with steering wheel buttons and rain/light sensor) ... 94
Winter diesel ... 192
Winter operation ... 184
Winter tyres ... 184
Setting a limit speed ... 150
Wiper blades
Replacing ... 206
Working speed governor (ADR) ... 141

X

Xenon headlamps
see Bi-xenon headlamps

Protection of the environment

Environmental note

Daimler's declared policy is one of comprehensive environmental protection.

The objectives are for the natural resources which form the basis of our existence on this planet to be used sparingly and in a manner which takes the requirements of both nature and humanity into account.

You too can help to protect the environment by operating your vehicle in an environmentally-responsible manner.

Fuel consumption and the rate of engine, transmission, brake and tyre wear depend on the following factors:

- operating conditions of your vehicle
- your personal driving style

You can influence both factors. You should bear the following in mind:

Operating conditions:

- avoid short trips as these increase fuel consumption.
- make sure that the tyre pressures are always correct.
- do not carry any unnecessary weight.
- keep an eye on the vehicle's fuel consumption.
- remove roof racks once you no longer need them.
- a regularly serviced vehicle will contribute to environmental protection. You should therefore adhere to the service intervals.
- always have service work carried out at a qualified specialist workshop.

Personal driving style:

- do not depress the accelerator pedal when starting the engine.
- do not warm up the engine with the vehicle stationary.
- drive carefully and maintain a safe distance from the vehicle in front.
- avoid frequent, sudden acceleration.
- change gear in good time and use each gear only up to ⅔ of its maximum engine speed.
- switch off the engine in stationary traffic.

Returning used vehicles

Mercedes-Benz will take back your Mercedes-Benz in order to dispose of it in an environmentally responsible manner in accordance with the European Union (EU) End of Life Vehicles Directive.

Depending on national regulations, the return of used vehicles applies to vehicles up to 3.5 t permissible gross weight. The Sprinter has already been meeting legal requirements for design in terms of suitability for recycling and reuse of parts for several years.

There is a network of collection points and vehicle dismantlers where your vehicle can be recycled in an environmentally-responsible manner. The methods employed in vehicle and parts recycling are constantly being developed and improved. The Sprinter will therefore meet even future, legally required increases in recycling quotas within the specified time.

You can obtain further information from the Mercedes-Benz homepage for your country or by contacting your local Mercedes-Benz hotline number.

Vehicle equipment

These Operating Instructions describe all models and standard and optional equipment of your vehicle that were available at the time of printing.

Country-specific variations are possible. Note that your vehicle may not be equipped with all of features described. This also applies to systems and functions relevant to safety. For this reason, the equipment of your vehicle may differ from some descriptions and illustrations. All of the systems that can be found in your vehicle are listed in the original pur-

chase agreement of your vehicle. Should you have any questions on the equipment and operation of your vehicle, please do not hesitate to contact any Mercedes-Benz Service Centre.

The operating instructions, the maintenance booklet and the equipment-dependent additional instructions are important documents and should be stored in the vehicle.

Operating safety and vehicle approval

Safety notes

⚠ WARNING

All work on the vehicle and, in particular, work relevant to safety or on safety-related systems must be carried out at a qualified specialist workshop.

⚠ WARNING

Some safety systems only function when the engine is running. You should therefore never switch off the engine when driving. Otherwise, the safety systems of your vehicle may not function correctly and as a result will no longer protect you and other persons as intended. In addition, there is a risk that you may lose control of your vehicle and thus cause an accident.

⚠ WARNING

If you drive over obstacles at high speed or if the vehicle bottoms out in rough terrain, it could cause heavy impacts to the vehicle underbody, tyres or wheels. This could cause your vehicle to be damaged, which in turn might lead to an accident. This also applies to vehicles which are equipped with underbody protection.

You should therefore drive over obstacles slowly. Prevent the vehicle from bottoming out when driving off-road and if necessary, have your vehicle inspected at a qualified specialist workshop.

⚠ WARNING

Work carried out incorrectly, or alterations made to the vehicle, e.g. re-routing of cables under coverings, could cause the safety systems of your vehicle to stop working properly. The safety systems would thus no longer protect you and other persons as intended. In addition, there is a risk that you may lose control of your vehicle and thus cause an accident.

All work and alterations to the vehicle, e.g. installations or modifications, should therefore be carried out at a qualified specialist workshop.

⚠ WARNING

If work on electronic equipment and its software is carried out incorrectly, this equipment could stop working. The electronic systems are networked via interfaces. Tampering with these electronic systems could cause malfunctions in systems which have not been modified. Malfunctions such as these can seriously jeopardise the vehicle's operating safety and therefore your own safety.

You should therefore have all work and modifications to electronic components carried out at a qualified specialist workshop.

Electromagnetic compatibility

The following information applies to all components of the vehicle which receive and/or transmit radio waves:

The wireless components of this vehicle comply with the essential requirements and the other pertinent specifications of the 1999/5/EC directive. You may obtain further information from any Mercedes-Benz Service Centre.

The components have been approved by the vehicle manufacturer in accordance with European Automotive EMC Directive 95/54/EC. Therefore, operation according to its intended purpose is approved for your

vehicle. The equipment does not require certification.

The equipment conforms to the relevant equipment-specific EMC specifications in accordance with the following European standards:

- EN 55013
- EN 55020

Therefore, adherence to the relevant specifications for electromagnetic compatibility is guaranteed for the components.

As a result, interference caused by your components to other electrical/electronic components, as well as interference to your components caused by other electrical/electronic components is largely prevented.

Please also observe the instructions on retrofitting electrical/electronic equipment (▷ page 289).

Qualified specialist workshops

A qualified specialist workshop has the necessary specialist knowledge, tools and qualifications to correctly carry out the work required on the vehicle. This is especially the case for work relevant to safety.

Observe the information in the Maintenance Booklet.

The following work should always be carried out at qualified specialist workshop:

- work relevant to safety
- service and maintenance work
- repair work
- modifications as well as installations and alterations
- work on electronic components

Mercedes-Benz recommends that you use a Mercedes-Benz Service Centre.

Registering your vehicle

Mercedes-Benz may ask its Service Centres to carry out technical inspections on certain vehicles to improve their quality or safety.

Mercedes-Benz can only inform you about vehicle checks if it has your registration data.

Your registration data is not stored if:

- you did not purchase your vehicle at an authorised specialist dealer.
- your vehicle has not been inspected at a Mercedes-Benz Service Centre.

It is advisable to register your vehicle with a Mercedes-Benz Service Centre. Inform Mercedes-Benz as soon as possible about any change of address or vehicle ownership.

Digital speedometer and total distance recorder

Do not attempt to modify the electronically stored total distance reading for the vehicle by tampering with the electronics.

If the total distance reading has been altered and you subsequently sell the vehicle but do not inform the buyer, this may constitute a punishable offence under local legislation.

Changing the engine power output

! Increased power could:

- change emission levels
- cause malfunctions
- lead to consequential damage

The operating safety of the engine cannot be guaranteed in all situations.

Any tampering with the engine management system in order to increase the engine power output will lead to the loss of warranty entitlements.

If the vehicle's engine power output is increased:

- tyres, suspension, braking and engine cooling systems must be adapted to the increased engine power output.
- have the vehicle recertified.
- report changes in power output to the vehicle insurers.

This will otherwise lead to the invalidation of the vehicle's general operating permit and its insurance cover.

If you sell the vehicle, inform the buyer of any alterations to the vehicle's engine power output. If you do not inform the buyer, this may constitute a punishable offence under national legislation.

Diagnostic interface

⚠ WARNING

If you connect equipment to a diagnostics connection, it can affect the operation of the vehicle systems. This could compromise the operating safety of your vehicle while driving. There is a risk of an accident.

Do not connect any equipment to a diagnostics connection.

⚠ WARNING

Loose equipment or cables hanging from a device which are connected to a diagnostic connection could impede pedal clearance. The equipment or cables could get caught between the pedals when driving and braking suddenly. This could impair the function of the pedals. There is a risk of accident.

Do not attach any equipment or cables in the driver's footwell.

! If the engine is switched off and a device is connected to a diagnostic connection, the battery may become discharged.

All the vehicle's diagnostics connections are only suitable for connecting to diagnostic equipment at a qualified specialist workshop.

Connecting equipment to diagnostics connections can lead to emissions monitoring information being reset. This could result in your vehicle no longer adhering to emissions laws and regulations. This may be a criminal offence or breach of road traffic regulations in certain countries.

Diesel particle filter

General notes

! If the vehicle is predominantly used for short-distance driving, this could lead to a fault in the automatic cleaning function for the diesel particle filter. As a result, fuel may accumulate in the engine oil and cause engine failure.

Vehicles with a malfunction display (vehicles with a Euro 5 engine)

For vehicles without steering wheel buttons: if the  indicator lamp for the diesel particle filter lights up in the instrument cluster, the automatic regeneration of the diesel particle filter is not sufficient or is malfunctioning.

For vehicles with steering wheel buttons: if the `Exhaust filter: Drive at high engine speed. See Owner's Manual` message appears in the display in the instrument cluster, the automatic regeneration of the diesel particle filter is not sufficient or is malfunctioning.

At the earliest possible opportunity, drive at an engine speed of at least 2000 rpm until the indicator lamp for the diesel particle filter goes out or the message in the display disappears.

To do this on vehicles with an automatic transmission, use Touchshift to shift to a lower gear (▷ page 132).

The regeneration of the diesel particle filter is assisted by the intentional temperature increase.

If the indicator lamp for the diesel particle filter or the message in the display does not go out after approximately 20 minutes, have the fault rectified immediately at a qualified specialist workshop.

Vehicles without a malfunction display

If you mainly drive short distances, you should drive on a motorway or an inter-urban road for 20 minutes every 500 km. This will allow the diesel particle filter to be sufficiently purged.

Attachments, bodies, equipment and conversions

Mercedes-Benz recommends genuine Mercedes-Benz parts and conversion parts and accessories that have been approved by Mercedes-Benz expressly for the type of vehicle concerned.

These parts have been specially tested to establish their safety, reliability and suitability.

! For safety reasons, have bodies manufactured and fitted in accordance with the applicable Mercedes-Benz body/equipment mounting directives. These body/equipment mounting directives ensure that the chassis and the body form one unit and that maximum operating and road safety is achieved.

For safety reasons, Mercedes-Benz recommends that:

- no other modifications should be made to the vehicle.
- approval should be obtained from Mercedes-Benz in the event of deviations from approved body/equipment mounting directives.

Approval from certified inspection agencies or official approvals cannot rule out risks to your safety.

! The wooden or plastic cargo area floor fitted at the factory is an integral component of the vehicle structure. The vehicle body could be damaged if you have the load area floor removed. This then affects the securing of loads and the maximum loading capacity of the lashing points is no longer guaranteed.

Therefore, do not have the load area floor removed.

Even seemingly small changes to the vehicle, such as attaching a radiator trim for winter driving or as protection against insects, are not permitted. These could cause the engine diagnostics to register distorted and incorrect data. In some countries, the recording of engine diagnostic data is a legal requirement, and must always be verifiable and accurate.

You may obtain further information from any Mercedes-Benz Service Centre.

The body/equipment mounting directives can be found on the Internet under:

https://bb-infoportal.mercedes-benz.com/portal/ar_van.0.html

Implied warranty

! Observe the notes in these Operating Instructions about the correct operation of your vehicle as well as about possible damage to the vehicle. Damage to your vehicle that arises from culpable contravention of these instructions is not covered by the Mercedes-Benz implied warranty of Daimler AG.

Correct use

Observe the following when using your vehicle:

- the safety notes in this manual
- national road traffic regulations
- the road traffic licensing regulations

Saved data in the vehicle

Fault data

The vehicle is fitted with equipment that can store data from the vehicle systems, for example faults that have been identified.

This information facilitates the diagnosis of vehicle systems, for example, and contributes to the continuous improvement of Mercedes-Benz products.

Mercedes-Benz is allowed to access this information and make it available to third parties:

- with the consent of the owner or the lessee of the vehicle
  - for vehicle diagnosis purposes when the vehicle is serviced at a workshop
  - for the continuous improvement of products
- in the case of an official request for law enforcement purposes
- for use in the settlement or judgement of disputes that involve Mercedes-Benz, its associated companies or marketing/customer service organisations.

ⓘ Bear in mind that for vehicles with telematics equipment (e.g. FleetBoard) – depending on the configuration – stored data can also be read out via the telematics equipment and transferred to the central fleet office, for example.

Other devices that store data

Depending on the equipment level, your vehicle may be fitted with communications and/or entertainment systems, e.g. navigation devices, telephone systems. You can store and edit the data that is required for operation of these devices. Further information on operation (e.g. on deleting data) can be found in the separate operating instructions.

Dashboard 24
Instrument cluster variants 27
Steering wheel with buttons 29
Centre console 29
Switch units 30

Dashboard

Cockpit, left-hand-drive vehicles

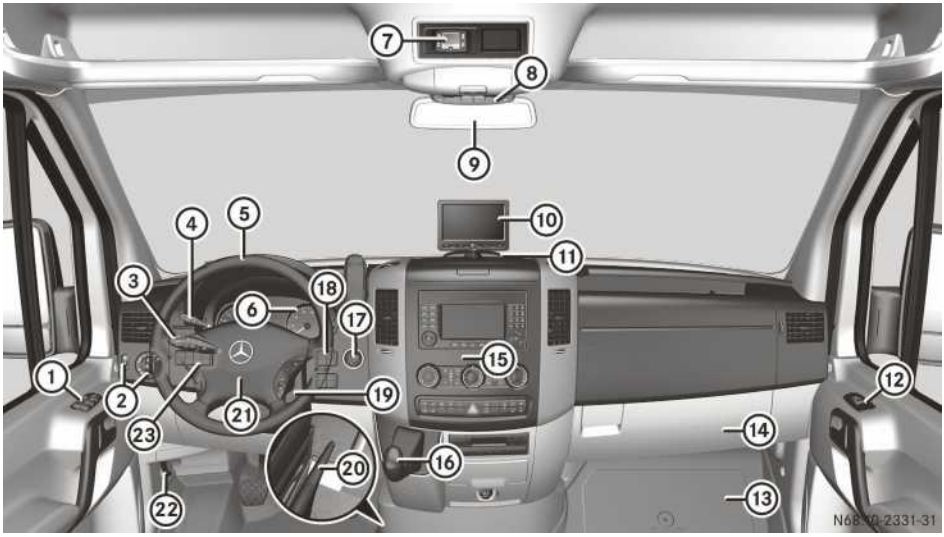

	Function	Page
①	Door control panel	31
②	Light switch	99
	Headlamp range adjustment	100
③	Combination switch:	
	• Turn signals	101
	• Main-beam headlamps	101
	• Windscreen wipers	104
	• Rear window wiper	105
④	Cruise control lever	146
⑤	Steering wheel without/with buttons	29
⑥	Instrument cluster	27
⑦	Timer for the auxiliary warm-air heater (auxiliary heating)	115
⑧	• Stowage compartment with interior light	102
	• Overhead control panel	30

	Function	Page
⑨	Rear-view mirror	78
⑩	Reversing camera monitor	153
⑪	PARKTRONIC warning display	151
⑫	Opens/closes the right-hand side window	68
⑬	Jack and vehicle tool kit	214
⑭	Glove compartment	164
⑮	Centre console	29
⑯	• Selector lever (automatic transmission)	125
	• Gear lever (manual transmission)	125
⑰	Ignition lock	58
⑱	Additional switch unit	31
⑲	Steering wheel adjustment	77
⑳	Parking brake	131

	Function	Page
㉑	Horn	
㉒	Opens the bonnet	200
㉓	Additional switch unit	31

Cockpit, right-hand-drive vehicles

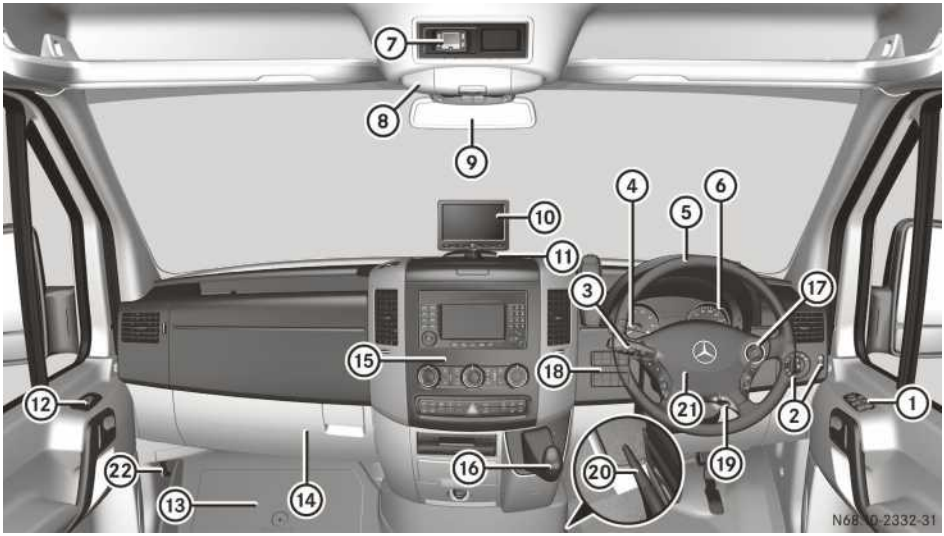

	Function	Page
①	Door control panel	31
②	Light switch Headlamp range adjustment	99 100
③	Combination switch: • Turn signals • Main-beam headlamps • Windscreen wipers • Rear window wiper	 101 101 104 105
④	Cruise control lever	146
⑤	Steering wheel without/with buttons	29
⑥	Instrument cluster	27
⑦	Timer for the auxiliary warm-air heater (auxiliary heating)	115
⑧	• Stowage compartment with interior light • Overhead control panel	102 30
⑨	Rear-view mirror	78

	Function	Page
⑩	Reversing camera monitor	153
⑪	PARKTRONIC warning display	151
⑫	Opens/closes the left-hand side window	68
⑬	Jack and vehicle tool kit	214
⑭	Glove compartment	164
⑮	Centre console	29
⑯	• Selector lever (automatic transmission) • Gear lever (manual transmission)	125 125
⑰	Ignition lock	58
⑱	Additional switch unit	31
⑲	Steering wheel adjustment	77
⑳	Parking brake	131
㉑	Horn	
㉒	Opens the bonnet	200

Instrument cluster variants

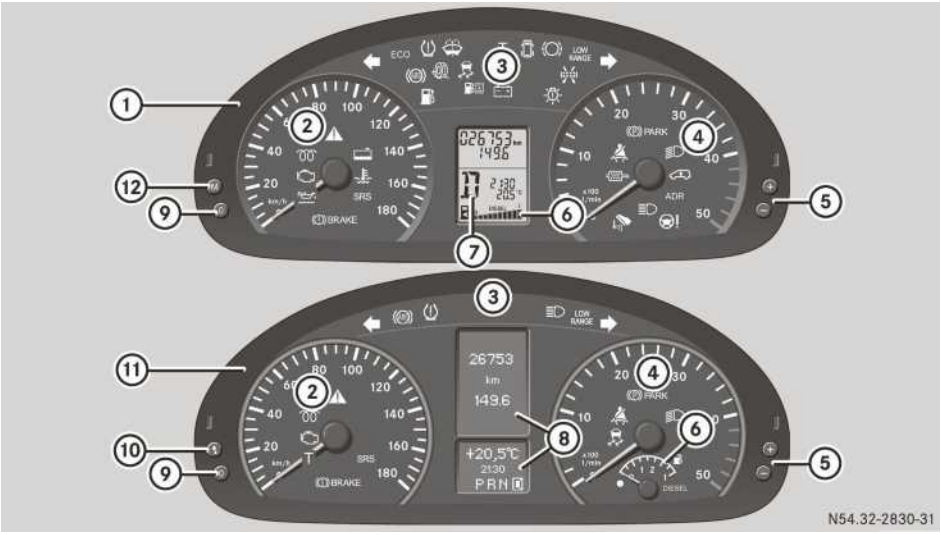

	Function	Page
①	Instrument cluster on vehicles without steering-wheel buttons	79
②	Speedometer with warning and indicator lamps	80
③	Warning and indicator lamps	
④	Rev counter with warning and indicator lamps	80
⑤	⊕, ⊖ Brightens/dims the instrument cluster lighting	80
⑥	Fuel gauge with fuel filler flap location indicator	80
⑦	Display	81
⑧	Display	82
⑨	⓪ Reset button	79
⑩	Service button Checks the engine oil level (vehicles with a diesel engine only)	203

	Function	Page
⑪	Instrument cluster in vehicles with steering-wheel buttons	79
⑫	Ⓜ Menu button: • changes standard display • selects menus	 81 81
	Warning and indicator lamps	
	ESP® warning lamp ASR warning lamp	135, 134 134, 134
	Coolant level too low	225
	Coolant temperature too high	225
SRS	Restraint systems malfunction	222
BRAKE	Brake fluid level too low EBD malfunction	220 220
	Engine oil level warning	223

	Function	Page
	Engine diagnostics indicator lamp	226
	Preglow system	225
	Left-hand turn signal	101
ECO	ECO Start active	142
	Tyre pressure loss warning lamp	227
	Fluid level too low in windscreen washer/headlamp cleaning system	227
T	Tachograph; see the separate operating instructions	
	Door or bonnet open	228
	Electrically operated step malfunction	228
	Brake pads/linings worn	223
LOW RANGE	LOW RANGE active	138
	Right-hand turn signal	101
	ABS malfunction	221
	ASR or starting-off aid malfunction	220
	BAS malfunction	220
	ESP® malfunction	219
	Dirt accumulation in air filter	226
	Reserve fuel	225
	Water in the fuel	227
	Battery charging malfunction	223
	Bulb defective	228
(P) PARK	Parking brake applied	131
	Dipped-beam headlamps on	99

	Function	Page
	ENR indicator lamp	159
ADR	Working speed governor (ADR) on	141
	Power steering assistance malfunction	229
	Main-beam headlamps on	101
	Depress the clutch pedal	229
	Reserve fuel	225
	Diesel particle filter malfunction	226
	Fasten seat belt	228

Vehicles with steering-wheel buttons: Corresponding messages may also be shown in display ⑧ (▷ page 27).

Steering wheel with buttons



	Function	Page
①	Display	82
	Controls the on-board computer	
②	Selecting a submenu or adjusting the volume + Up/increases the volume – Down/reduces the volume	82
③	Using the telephone Accepts a call/starts dialling Ends a call/rejects an incoming call	95
④	Scrolling from one menu to another Forwards Back	82
⑤	Scrolling within a menu Forwards Back	82

Centre console



	Function	Page
①	Stowage compartment	163
②	Radio or COMAND, see the separate operating instructions	
③	Air-conditioning control panel	107
④	Centre console switch unit	30
⑤	• Stowage compartment or • CD changer, see the separate operating instructions, or • Tachograph, see the separate operating instructions	
⑥	Cup holder with: • ashtray • cigarette lighter	165 161 162
⑦	12 V socket	166

Switch units

Centre console



	Function	Page
	Opens/closes the left/ right-hand electric sliding door	59
	Switches the left/right-hand seat heating on/off	77
	Switches the windscreen heating on/off	105
	Switches the rear window heating on/off	106
	Activates/deactivates PARKTRONIC	153
ECO	Activates/deactivates ECO Start, Euro 5 engine	142
	Switches the hazard warning lamps on/off	102
ASR OFF	Activates/deactivates ASR	134
	Central locking, interior/ rear compartment	56

Roof

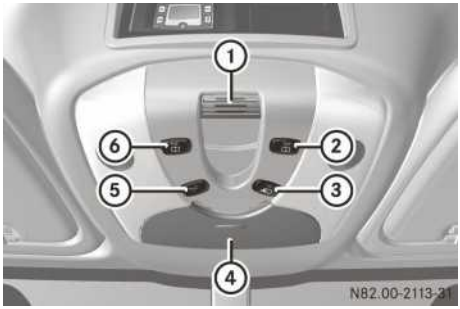

	Function	Page
①	Microphone for the telephone	167
②	Switches the right-hand reading lamp on/off	102
③	Switches the automatic interior lighting on/off	102
④	• Spectacles compartment or • Anti-theft alarm system (ATA)	164 70
⑤	Switches the interior lighting on/off	102
⑥	Switches the left-hand reading lamp on/off	102

Driver's door



	Function	Page
①	Adjusts the exterior mirrors	78
②	Selects an exterior mirror	78
③	Opens/closes the left-hand side window	68
④	Opens/closes the right-hand side window	68
⑤	Opens/closes the left-hand hinged window	69
⑥	Opens/closes the right-hand hinged window	69

Additional switch units

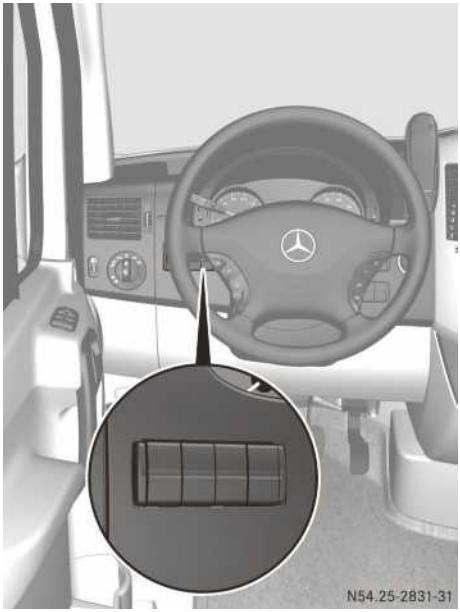

Switch unit between the light switch and the steering wheel

	Function	Page
	Switches the hot-water auxiliary heater on/off	115
	Switches the heater booster function on/off	123
	Raises/lowers the vehicle level	159
	Switches power take-off on/off	141
	Sets the working speed	142
	Switches the working speed governor (ADR) on/off	142
	Ventilates the load compartment	123
	Activates/deactivates KEYLESS ENTRY	62



Switch unit between the steering wheel and ignition lock

	Function	Page
	Switches the rear-compartment convenience lighting on/off	103
ECO	Activates/deactivates ECO start, Euro 4 engine	142
	Activates/deactivates electronic level control (ENR)	159
	Activates/deactivates all-wheel drive	136
	Activates/deactivates LOW RANGE gear reduction unit	138

Useful information 34
Occupant safety 34
General safety notes 48
Tyres and wheels 49

Useful information

These Operating Instructions describe all models and standard and optional equipment of your vehicle that were available at the time of printing. Country-specific variations are possible. Note that your vehicle cannot be fitted with all of the described functions. This also applies to systems and functions relevant to safety.

Read the information on qualified specialist workshops: (▷ page 19).

Occupant safety

Restraint systems

The seat belts, belt tensioners, belt force limiters and airbags are restraint systems designed to complement one another. They reduce the risk of injury in specific, predefined types of accident situations and thereby increase occupant safety. Neither seat belts nor airbags generally provide any protection from objects that enter the vehicle.

In order for the restraint systems to offer the intended level of protection, make sure that:

- the seat and head restraint are set correctly (▷ page 71).
- the seat belt is being worn correctly (▷ page 34).
- the airbags can inflate properly if they are deployed (▷ page 38).
- the steering wheel is correctly set (▷ page 77).
- the restraint systems have not been tampered with.

An airbag increases the degree of protection afforded to a vehicle occupant who is wearing a seat belt. It is therefore only an additional restraint system which complements, but does not replace, the seat belt. Airbags do not replace the need for all vehicle occupants to wear their seat belts correctly at all times. Not all accidents will trigger the airbag. If, for example, deployment of the airbag would not increase the protection offered by a correctly worn seat belt, the airbag will not be deployed.

If the airbag is triggered, it can only provide increased protection if the seat belt is worn correctly. Firstly, the seat belt helps to keep the vehicle occupant in the best position in relation to the airbag. Secondly, in the event of a frontal collision, for example, the seat belt prevents the occupant from being thrown towards the point of the impact.

⚠ WARNING

Modifications to or work performed incorrectly on the following parts can result in the restraint systems not functioning as intended:

- the restraint system, consisting of seat belts and their anchorage points, belt tensioners, belt force limiters and airbags
- the wiring
- networked electronic systems

Airbags and belt tensioners could fail to deploy or be triggered in an accident despite the deceleration force being sufficient to trigger the systems, or could be triggered unintentionally. For this reason, never make any modifications to the restraint systems.

Therefore, you must not tamper with electronic components or their software.

Seat belts

Important safety notes

⚠ WARNING

Airbags provide additional protection, but are not a substitute for the seat belts. To reduce the risk of serious or even fatal injuries, make sure that all occupants – in particular, pregnant women – wear their seat belt correctly at all times and have adopted a normal sitting position, and that their seat backrest is positioned as close to the vertical as possible.

⚠ WARNING

A seat belt which is not worn, which is worn incorrectly, or which has not been engaged in the seat belt buckle correctly, cannot perform its intended protective function. Under certain circumstances this could cause severe or even fatal injuries. Make sure that all vehicle occupants – in particular, pregnant women – wear their seat belt correctly at all times.

Make sure that the belt:

- is routed as low as possible across your pelvic area, i.e. across your hip joints and not across your abdomen
- fits closely
- is not twisted
- is routed across the middle of your shoulder
- is not routed across your neck or under your arm
- fits closely across your pelvic area, by pulling upwards on the shoulder section of the belt

Do not secure any objects with a seat belt if the seat belt is being used by one of the vehicle's occupants.

Avoid wearing bulky clothing, e.g. a winter coat.

Do not route the belt strap across sharp-edged or fragile objects, especially if these are on or in your clothing, e.g. spectacles, pens, keys, etc. The seat belt strap could be damaged and you could be injured.

Only one person should use each seat belt at any one time.

On no account should children travel in the vehicle while sitting on the lap of another occupant. It would not be possible to restrain the child, and the child and other vehicle occupants could be injured seriously or even fatally in the event of abrupt braking.

Persons under 1.50 m tall or under twelve years of age cannot wear the seat belts properly. They therefore require additional suitable restraint systems fitted on appropriate seats for protection in an accident. Always follow the manufacturer's installation instructions when fitting a child seat.

⚠ WARNING

A seat belt only offers its intended degree of protection if the backrest is positioned as close to the vertical as possible and if the occupant is sitting upright. Avoid seat positions that prevent the seat belt from being correctly routed. You will find further information under "Seat" in the index. You should therefore position the backrest as close to the vertical as possible. Never drive with the backrest tilted too far back. You could otherwise be seriously or even fatally injured in the event of an accident or sudden braking.

⚠ WARNING

The seat belt cannot function correctly if the belt or buckle is dirty or damaged. Keep the belt and buckle clean, otherwise the belt tongue cannot engage correctly.

Regularly check the seat belts to make sure that they:

- are not damaged
- are not routed over sharp edges
- are not trapped

Otherwise, the belt could tear in the event of an accident. You or others could be seriously or even fatally injured.

Have seat belts which have been damaged or subjected to heavy loads in an accident replaced and have their anchorages checked.

For safety reasons, Mercedes-Benz recommends that you only use seat belts which have been specially approved for your vehicle by Mercedes-Benz.

Seat belts are the most effective means of reducing the occupants' movement in the event of a collision. This reduces the danger of occupants hitting the vehicle interior.

ⓘ Many countries have legislation concerning the use of seat belts and child restraint systems.

Wearing seat belts

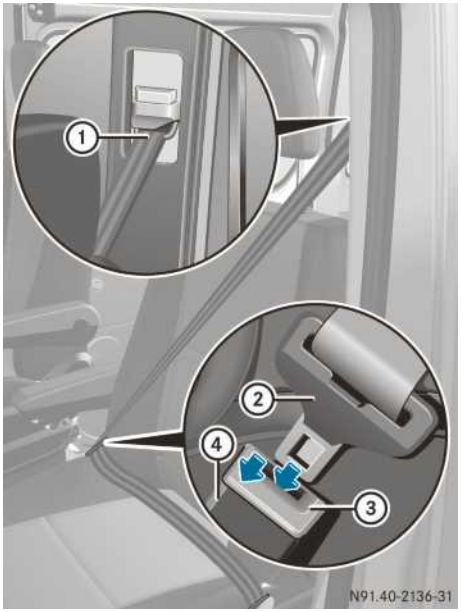

- ▶ **To fasten the seat belt:** pull the seat belt smoothly out of the belt reel.
- ▶ Guide the three-point seat belt over your shoulder and the lap belt over the pelvic area.
- ▶ Engage belt tongue ② in seat belt buckle ④.
- ▶ Pull upwards on the shoulder section of the three-point seat belt to tighten it across your body.
- ▶ The upper section of the three-point seat belt must be routed centrally over the shoulders. Adjust the seat belt to the appropriate height as necessary.
- ▶ **To release the seat belt:** press release button ③ on seat belt buckle ④.

Adjusting the seat belt height

⚠ WARNING

Only adjust the belt height when the vehicle is stationary and the parking brake is applied.

You could otherwise lose control of the vehicle as a result of adjusting movements and endanger yourself and others.

You can adjust the belt height for the driver's seat and the outer co-driver's seat.

Adjust the belt to a height that allows it to be routed across the middle of your shoulder.

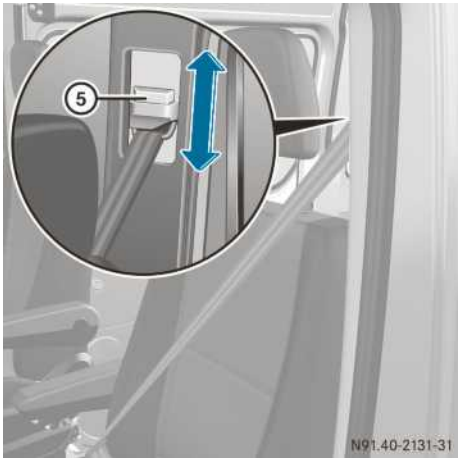

- ▶ **To raise:** slide belt sash guide ① upwards. Belt sash guide ① engages in various positions.
- ▶ **To lower:** press and hold release button ⑤.
- ▶ Adjust belt sash guide ① to the appropriate height.
- ▶ Let go of release button ⑤ and make sure that belt sash guide ① has engaged.

SRS (Supplemental Restraint System)

General notes

SRS reduces the risk of occupants hitting parts of the vehicle interior in the event of an accident. In addition, it can reduce the forces the occupants are subjected to during an accident.

SRS consists of:

- SRS warning lamp
- belt tensioners
- belt force limiters
- airbag system including:
  - control unit
  - airbags

SRS warning lamp

SRS regularly performs self-checks when the ignition is switched on and while the engine is running. This allows faults to be detected in good time.

When you switch on the ignition, the SRS warning lamp lights up in the instrument cluster for approximately four seconds.

⚠ WARNING

A malfunction has occurred if the SRS warning lamp:

- does not light up when you switch on the ignition, or
- does not go out within a few seconds of switching on the ignition, or
- lights up again

Individual systems could be triggered inadvertently or might not be triggered at all in the event of an accident with a high rate of vehicle deceleration. If a malfunction does occur, have SRS checked immediately at a qualified specialist workshop.

Triggering the belt tensioners, belt force limiters and airbags

In the event of a collision, the sensor in the airbag control unit evaluates important physical data such as the duration, direction and rate of vehicle deceleration or acceleration. Based on the evaluation of this data as well as the deceleration in a longitudinal direction, the belt tensioners are the first to be triggered by the control unit in an accident.

The front airbags are not deployed unless the vehicle's rate of longitudinal deceleration reaches a higher value.

In the first stages of a collision, the control unit evaluates physical data such as duration, direction and rate of vehicle deceleration or acceleration. Based on this evaluation, the control unit determines whether it is necessary to trigger the belt tensioners or deploy the airbags.

The triggering thresholds for the belt tensioners and airbags are variable and are adapted to the rate of vehicle deceleration. This process is pre-emptive in nature since the airbags must be deployed during, and not at the end of, the collision.

ⓘ Airbags are not deployed in all types of accidents. They are controlled by a complex sensor system and evaluation logic. This process is pre-emptive in nature as airbags are deployed during the impact and are adapted to provide calculated, additional protection for the vehicle occupants. Not all airbags are deployed in an accident.

The various airbag systems work independently of one another. However, the deployment of each individual system depends on the severity of the impact detected, in particular, the vehicle's rate of deceleration or acceleration and the type of impact (head-on or side impact).

Vehicle deceleration or acceleration and the direction of the force are essentially determined by:

- the distribution of the force during the impact
- the collision angle
- the deformation characteristics of the vehicle
- the characteristics of the object with which the vehicle has collided, e.g. the other vehicle

Factors which can only be seen and measured after the collision has occurred are not deci-

sive for airbag deployment. They also do not provide an indication of their deployment.

The vehicle may be considerably deformed without the driver's front airbag being deployed; for example, if the bonnet or wings are hit. This is the case if only relatively easily deformable parts have been hit and the required rate of deceleration has not been reached. It is also possible that airbags may be deployed even though the vehicle is only slightly deformed. This is the case if, for example, very rigid vehicle parts such as the longitudinal body members are hit in an accident and the rate of deceleration is sufficient.

Belt tensioners, belt force limiters

If the vehicle is equipped with a driver's airbag, the seat belts on the driver's and co-driver's seats have belt tensioners.

Belt tensioners tighten the seat belts in an accident, pulling them close against the seat occupant's body.

ⓘ Belt tensioners do not correct an incorrect seat position or incorrectly worn seat belts.

Belt tensioners do not pull occupants back towards the backrest.

If the seat belt is also equipped with a belt force limiter, the force exerted by the seat belt on the seat occupant is reduced.

While the ignition is switched on, the belt tensioner is triggered only:

- if the restraint systems are operational; see SRS warning lamp (▷ page 37)
- in the event of a head-on or rear-end collision, if the vehicle decelerates or accelerates rapidly in a longitudinal direction during the initial stages of the collision
- in the event of a side impact if the vehicle decelerates or accelerates rapidly in a lateral direction during the initial stages of the collision and the vehicle is equipped with thorax sidebags and/or windowbags

If the belt tensioners are triggered, you will hear a bang and powder may also be released. The bang will generally not affect your hearing, except in extremely rare circumstances. The powder emitted is not hazardous to health. The SRS warning lamp lights up.

⚠ WARNING

If the seat belt tensioners have been triggered, they provide no additional protection in the event of another accident. Therefore, have belt tensioners which have been triggered replaced at a qualified specialist workshop.

Comply with safety regulations when disposing of belt tensioners. Any Mercedes-Benz Service Centre can provide details of these regulations.

Airbag system

Important safety notes

⚠ WARNING

To reduce the risk of serious or fatal injuries in the event of an accident with a high rate of deceleration, e.g. injuries caused by an airbag deploying within milliseconds or sudden braking, observe the following points:

- all vehicle occupants must select a seat position which allows them to wear their seat belt correctly and which is as far away from the airbag as possible. The driver's seat position must be such that the vehicle can be driven safely. The distance from the driver's seat to the pedals must be such that the driver is able to depress them fully. The distance between the driver's chest and the centre of the airbag cover must be more than 25 cm. The driver's arms should be slightly bent when holding the steering wheel.
- vehicle occupants should always wear their seat belt correctly and position their backrest as close to the vertical as possible.
- adjust the head restraints in such a way that their upper edge is at the same height as the seat occupant's head.

- move the co-driver's seat as far back as possible, especially if a child is secured in a restraint system on this seat.
- rearward-facing child restraint systems must not be fitted on the co-driver's seat in vehicles which have a co-driver's front airbag. Children in a rearward-facing child restraint system must be secured on a suitable rear seat.

  If you secure a forward-facing child restraint system to the co-driver's seat, you must move the co-driver's seat as far back as possible.
- do not lean forwards, e.g. over the padded boss of the steering wheel, particularly when the vehicle is in motion.
- do not put your feet on the dashboard.
- only hold the steering wheel by the rim; this allows the airbag to deploy fully. If you hold the inner part of the steering wheel, you could be injured when the airbag deploys.
- do not lean on the doors from inside the vehicle.
- make sure that there are no people, animals or objects between the vehicle occupants and the area of deployment of the airbags.
- do not place objects which protrude out in the stowage space above the co-driver's front airbag. Only in this way can the co-driver's front airbag deploy fully.
- do not place any objects between the seat backrest and the door.
- do not hang any hard objects, e.g. coat hangers, on the grab handles or coat hooks.

Due to the high speed of airbag deployment, it is not possible to entirely rule out the risk of injuries caused by the airbag deploying.

⚠ WARNING

The airbag function is only guaranteed if you:

- do not cover or affix badges or stickers to the padded boss of the steering wheel, the co-driver's front airbag cover, the thorax sidebag cover on the side cushions of the front seats and the windowbag covers in the roof frame.
- do not modify the restraint system components, including the wiring.
- do not make any improper or non-professional modifications or installations to other electric components or wiring.

Your vehicle is equipped with the following airbags, depending on the equipment version:

- driver's airbag in the steering wheel
- co-driver's airbag above the glove compartment
- thorax sidebags in the outer seat side cushions of the individual front seats
- windowbags in the side roof frame between the A-pillar and B-pillar

The airbag covers are marked either "SRS/AIRBAG" or "AIRBAG".

Airbag deployment

A deployed airbag slows and reduces the movement of the vehicle occupants.

If the airbag is deployed, you will hear a bang and powder may also be released. The bang will generally not affect your hearing, except in extremely rare circumstances. The powder emitted is not hazardous to health. An airbag deploys within milliseconds. The SRS warning lamp lights up.

When the vehicle occupant makes contact with the airbag, hot gas flows out of the deployed airbag. This feature is designed to reduce the force acting on the occupant's head and chest. The airbag is therefore in a deflated state after an accident.

⚠ WARNING

The airbag parts are hot after the airbag has been deployed. Do not touch them as you could burn yourself.

Have the airbags replaced at a qualified specialist workshop. Otherwise, occupants are not protected by the airbags in the event of another accident.

WARNING

A small amount of powder is released when an airbag is deployed. The powder could cause short-term breathing difficulties in people with asthma or other respiratory problems.

In order to prevent breathing difficulties, you should leave the vehicle as soon as it is safe to do so. You can also open the window to allow fresh air to enter the interior. The powder does not constitute a health hazard and does not indicate that there is a fire in the vehicle.

Front airbags

The front airbags increase the degree of protection afforded to the driver and co-driver against head and chest injuries.

The driver's airbag and/or co-driver's airbag are deployed:

- in the initial stages of an accident with a high rate of vehicle acceleration or deceleration in a longitudinal direction
- if the system determines that airbag deployment can offer additional protection to that provided by the seat belt
- if the respective seat belt is fastened
- independently of other airbags in the vehicle

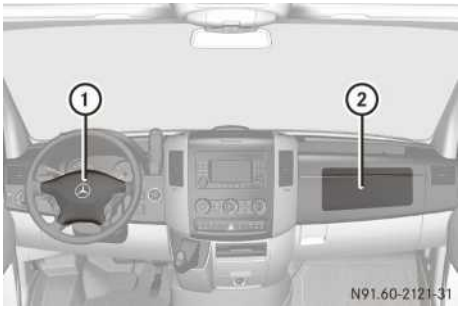

Driver's front airbag ① deploys in front of the steering wheel; co-driver's front airbag ② deploys in front of and above the glove compartment and centre console.

Thorax sidebags

WARNING

For safety reasons, Mercedes-Benz recommends that you only use seat covers that have been tested for Mercedes-Benz vehicles and which have a special recess for thorax sidebags. A thorax sidebag may otherwise not deploy correctly and may fail to provide the intended degree of protection in the event of a collision. You can obtain these covers from a Mercedes-Benz Service Centre, for example.

WARNING

To reduce the risk of injury when a thorax sidebag is deployed, you should make sure that:

- there are no people, animals or objects between the vehicle occupants and the area of deployment of the airbags
- no accessories, e.g. drinks can holders, are attached to the doors.
- only light clothing is hung on the coat hooks in the vehicle.
- there are no heavy or sharp objects in the pockets of items of clothing.

WARNING

To reduce the risk of severe or fatal injury when the thorax sidebag is deployed, you must make sure that:

- vehicle occupants – in particular, children – never lean their head in the thorax sidebag's deployment range around the window.
- vehicle occupants always wear their seat belt correctly and position their backrest as close to the vertical as possible.
- children under 1.50 m tall and under 12 years of age are always secured in suitable child restraint systems.

The thorax sidebags are only integrated into the outer side of the backrests on single front seats. The airbag deployment enhances the level of protection for the thorax (but not the

head, neck or arms) of the vehicle occupants on the side of the vehicle where the impact occurs.

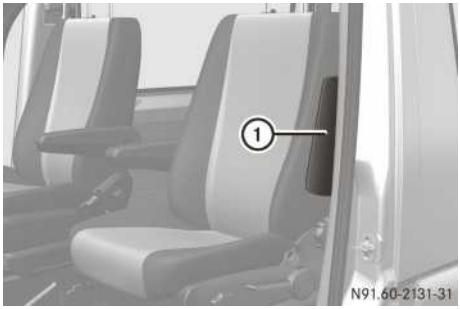

Thorax sidebags ① deploy between the door and the occupants in the area of the thorax.

Thorax sidebags ① are deployed:

- at the start of an accident with a high rate of lateral vehicle deceleration or acceleration, e.g. in a side impact
- on the side on which the impact occurs
- whether or not the respective seat belt is fastened
- independently of the front airbags
- independently of the belt tensioner

You can find further information about airbag deployment at (▷ page 39).

You can find further information about the triggering of belt tensioners and belt force limiters at (▷ page 37).

Windowbags

⚠ WARNING

In order for the windowbag to provide its intended level of protection, make sure that there are no objects between the vehicle occupants and the area of deployment of the windowbags.

⚠ WARNING

Observe the following notes to reduce the risk of serious or even fatal injury if the windowbag is deployed:

- vehicle occupants – in particular, children – must never lean their head in the area of the window into which the windowbag deploys.
- vehicle occupants must always have their seat belts fastened correctly.
- always secure children under 1.50 m tall and under 12 years of age in suitable child restraint systems.

The windowbags enhance protection for the head (but not the chest or arms) of the vehicle occupants on the side of the vehicle on which the impact occurs.

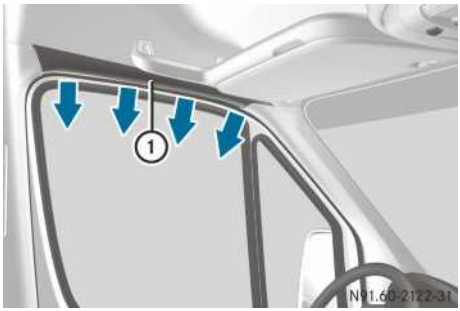

Windowbags ① are deployed:

- in the initial stages of an accident with a high rate of vehicle acceleration or deceleration in a lateral direction
- on the side on which the impact occurs
- regardless of whether the co-driver's seat is occupied
- whether or not the respective seat belt is fastened
- independently of the front airbags
- independently of the belt tensioner

You can find further information about airbag deployment at (▷ page 39).

You can find further information about the triggering of belt tensioners and belt force limiters at (▷ page 37).

Children in the vehicle

Important safety notes

⚠ WARNING

Activate the child-proof door locks if children are travelling in the vehicle. The children could otherwise open the doors while you are driving, injuring themselves or others.

If a child is travelling in the vehicle:

- secure the child, preferably on a suitable seat in the rear, using a child restraint system appropriate to the age and size of the child and which has been approved for Mercedes-Benz vehicles.
- fasten the child's seat belt before driving off.
- activate the child-proof locks in the vehicle doors (▷ page 47).

You can obtain child seats and information about the correct child restraint system from any Mercedes-Benz Service Centre.

⚠ WARNING

Do not leave children unsupervised in the vehicle, even if they are secured in a child restraint system. Children could otherwise injure themselves on parts of the vehicle. They could be severely or even fatally injured by prolonged exposure to intense heat or cold.

If children open a door, they could:

- cause injury to other persons
- get out of the vehicle and thereby injure themselves or be injured by a passing vehicle
- sustain serious injuries if they were to fall out of the vehicle, due to its height from the ground

Always take the key with you when leaving the vehicle, even if you are only leaving for a short time.

⚠ WARNING

Do not expose the child restraint system to direct sunlight.

This can cause parts of the child restraint system to become very hot. Touching these parts can cause burns.

⚠ WARNING

Do not carry heavy or hard objects inside the vehicle unless they are secured.

An unsecured or incorrectly positioned load increases the risk of injury to the child in the event of:

- sharp braking
- a sudden change in direction
- an accident

You can find further information under "Loading guidelines" in the index.

Child restraint systems

Mercedes-Benz recommends that you only use child restraint systems suitable for the age and size of the children on the different seats (▷ page 45).

⚠ WARNING

To reduce the risk of serious or even fatal injury to the child in the event of an accident, braking or sudden change in direction:

- always secure children less than 1.50 m tall and under 12 years of age in a special child restraint system installed on a suitable vehicle seat, as the seat belts are not designed for passengers of this size.
- rearward-facing child restraint systems must not be fitted to the co-driver's seat in vehicles which have a co-driver's airbag. Secure children in a rearward-facing child restraint system fitted to a suitable rear seat.

- if you fit a forward-facing child restraint system to the co-driver's seat, you must move the co-driver's seat as far back as possible.
- do not allow a child to travel sitting on the lap of a vehicle occupant. The forces exerted in the event of an accident, sharp braking or a sudden change in direction make it impossible for a child to be held securely. The child could be thrown against the vehicle interior and be seriously or even fatally injured.
- all vehicle occupants must always have their seat belt fastened correctly.

⚠ WARNING

If the child restraint system is not fitted correctly to a suitable seat, the child may not be secured in the event of an accident or sudden braking and may be seriously or even fatally injured. Therefore, when fitting a child restraint system, you must observe the manufacturer's installation instructions as well as the notes on using the child restraint system.

Child restraint systems should preferably be fitted to the rear seats. Children are generally better protected there.

Never place objects, e.g. cushions, under the child restraint system. The entire base of the child restraint system must always rest on the seat cushion.

A child restraint system must not be used without the genuine cover designed for it. Only replace damaged covers with genuine covers.

On the rear seats, only use child restraint systems that have been recommended for use in Mercedes-Benz vehicles.

⚠ WARNING

If you no longer require the child restraint system, remove it from the vehicle or secure it with the seat belt.

The child restraint system could otherwise be thrown through the vehicle interior in the event of an accident.

⚠ WARNING

Bear in mind that child restraint systems and their securing systems which have been damaged or subjected to a load in an accident may no longer be able to fulfil their protective function. For this reason, a child secured in these systems in the event of an accident, sharp braking or a sudden change in direction may be seriously or even fatally injured.

Have child restraint systems and their securing systems which have been damaged or subjected to a load in an accident checked immediately at a qualified specialist workshop.

Suitable vehicle seats

Weight and age categories	Child restraint system on the co-driver's or twin co-driver's seat	Child restraint system on the rear bench seat[1]
Category 0: up to 10 kg; Up to approximately 9 months	Universal[2] or as recommended	Universal or as recommended
Category 0+: up to 13 kg; Up to approximately 18 months	Universal[2] or as recommended	Universal or as recommended
Category I: 9to 18 kg; Between approximately 8 months and 4 years	Universal[3, 4] or as recommended	Universal or as recommended
Category II/III: 15to 36 kg; Between approximately 3½ and 12 years	Universal[3, 4] or as recommended	Universal or as recommended

"Universal" category child restraint systems can be recognised by their orange approval label. This label is affixed to the child restraint system and identifies it.

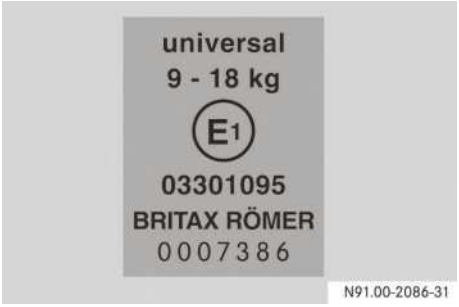

Example of an approval label on the child restraint system

1 Not permissible on vehicles with a crewcab.
2 Not permissible on vehicles with a co-driver's airbag.
3 Do not use a rearward-facing child restraint system.
4 Move the co-driver's seat to its rearmost position.

Recommended child restraint systems

Weight and age categories	Manufacturer	Model	Type approval number	MB order number
Category 0: up to 10 kg; Up to approximately 9 months	Britax Römer	BABY SAFE PLUS[5]	E1 03 301146	B6 6 86 8213
Category 0+: up to 13 kg; Up to approximately 18 months	Britax Römer	BABY SAFE PLUS[5]	E1 03 301146	B6 6 86 8213
Category I:9to 18 kg; Between approximately 8 months and 4 years	Britax Römer	DUO PLUS[6]	E1 03 301133	B6 6 86 8218
Category II/III: 15to 36 kg; Between approximately 3½ and 12 years	Britax Römer	KID[6]	E1 03 301148	B6 6 86 8308 B6 6 86 8302



Warning sticker on the co-driver's sun visor

5 The child restraint system must not be fitted to the co-driver's seat in vehicles with a co-driver's airbag.

6 Move the co-driver's seat to its rearmost position.



Warning symbol for a rearward-facing child restraint system

ISOFIX child seat securing system

ISOFIX is a standardised securing system for special child restraint systems on the rear seats. The securing rings for the child restraint systems are located between the seat cushion and the seat backrest:

- on the outer left and right-hand sides on a narrow rear bench seat with three seats
- on the outer left side on a rear bench seat with two seats

ⓘ Other child restraint systems can be secured to the seats using the seat belts (▷ page 42). Only use child restraint systems that are appropriate for the age and size of the child and that conform to legal requirements. Make sure that you observe the child-seat manufacturer's installation instructions.

⚠ WARNING

A child restraint system secured by the ISOFIX child seat securing system does not provide sufficient protection for children weighing more than 22 kg. For this reason, do not secure children weighing more than 22 kg in a child restraint system secured by the ISOFIX child seat securing system. If the child weighs more than 22 kg, secure the child restraint system using a three-point seat belt.

⚠ WARNING

If the child restraint system is not fitted correctly, the child cannot be restrained in the event of an accident or sudden braking and may be seriously or even fatally injured. Follow the manufacturer's installation instructions when fitting the child restraint system.

On the rear seats, only use child restraint systems with an ISOFIX child seat securing system and which have been recommended for use in Mercedes-Benz vehicles.

An incorrectly fitted child restraint system could come loose and seriously or even fatally injure the child or other vehicle occupants. After installation, make sure the child restraint system is locked in place in the securing rings on both sides.

⚠ WARNING

If the child restraint system or its securing system, e.g. the ISOFIX child seat securing system, has been damaged or subjected to a load in an accident, the child secured in the restraint system may be seriously or even fatally injured in the event of an accident, sharp braking or a sudden change in direction.

For this reason, have child restraint systems and their securing systems which have been damaged or subjected to a load in an accident checked and, if necessary, replaced immediately at a qualified specialist workshop.

! When fitting the child restraint system, make sure that the seat belt for the middle seat does not get trapped.

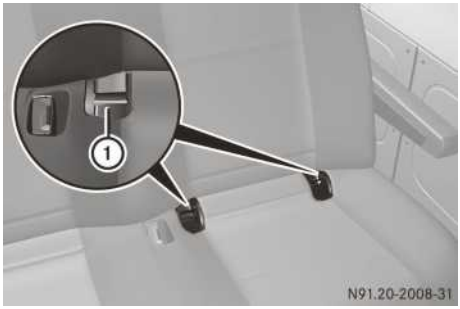

① Securing rings

⚠ WARNING

Do not leave children unsupervised in the vehicle, even if they are secured in a child restraint system. Children could otherwise injure themselves on parts of the vehicle. They could be severely or even fatally injured by prolonged exposure to intense heat or cold.

If children open a door, they could:

- cause injury to other persons
- get out of the vehicle and thereby injure themselves or be injured by a passing vehicle
- sustain serious injuries if they were to fall out of the vehicle, due to its height from the ground

Always take the key with you when leaving the vehicle, even if you are only leaving for a short time.

⚠ WARNING

Do not expose the child restraint system to direct sunlight.

This can cause parts of the child restraint system to become very hot. Touching these parts can cause burns.

Top Tether

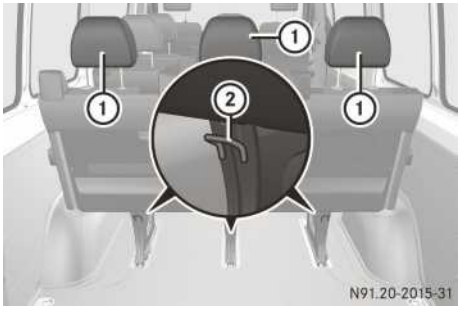

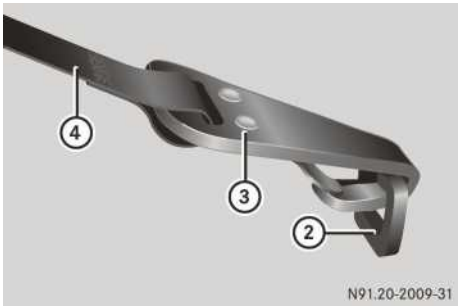

- ▶ Slide head restraint ① upwards.
- ▶ Guide Top Tether belt ④ under head restraint ① between the two head restraint rods.
- ▶ Hook Top Tether hook ③ into Top Tether anchorage ② at the feet of the rear bench seat. While doing so, make sure Top Tether belt ④ can move freely.
- ▶ Fit the ISOFIX child restraint system with Top Tether. Make sure you observe the child-seat manufacturer's installation instructions when doing so.

Child-proof locks

If children are travelling in the vehicle, you can activate the child-proof locks for the rear doors.

You can use the child-proof locks in the doors to secure the sliding door and the rear door individually.

With the exception of the electric sliding door, a secured door cannot be opened from the

inside. It can only be opened from the outside if the vehicle is unlocked. If the electric sliding door is secured, only the sliding door rear controls are deactivated. You can open the electric sliding door at any time from inside the vehicle, using the switch in the centre console (▷ page 59).

⚠ WARNING

Activate the child-proof door locks if children are travelling in the vehicle. The children could otherwise open the doors while you are driving, injuring themselves or others.

Child-proof locks for the sliding door/rear door

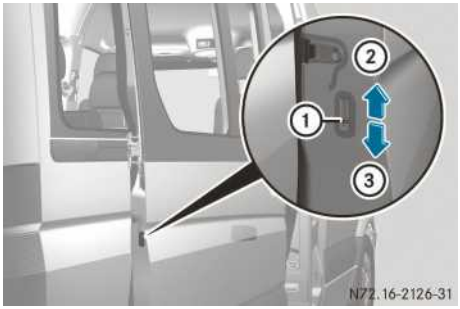

Child-proof lock for the sliding door

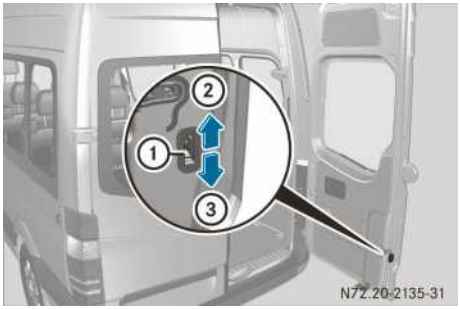

Child-proof lock for the rear door

① Latch

② To activate

③ To deactivate

▶ **To activate/deactivate:** push latch ① in the corresponding direction.

▶ Then, make sure that the child-proof locks are working properly.

General safety notes

Stickers

There are various warning stickers affixed to your vehicle. They are intended to make you and others aware of various dangers.

⚠ WARNING

Do not remove any warning stickers.

If you remove warning stickers, it may prevent you or others from recognising dangers. This could result in injury to yourself or others.

Materials which are hazardous to health

Do not store or transport in the cab any substances that constitute a health hazard or react aggressively.

These include:

- Solvents
- Fuels
- Oils and greases
- Cleaning agents
- Acids

⚠ WARNING

Do not store or transport any substances in the cab that constitute a health hazard or react aggressively. Gases and liquids can escape even from securely closed containers.

This may affect your health and impair your concentration while you are driving. In addition, electrical components (such as control units and connectors) could be damaged. This can result in malfunctions, system failures or short circuits which could start a fire.

You could cause an accident, thereby endangering yourself and others.

Tyres and wheels

Operating safety and roadworthiness

General notes

Tyres are particularly important for the operating safety and roadworthiness of the vehicle. Therefore, you should check the tyre pressure, tyre tread and tyre condition on a regular basis.

You can obtain further information on the following at a specialist tyre store or at any qualified specialist workshop:

- recommended tyre brands
- tyre load-bearing capacity (LI Load Index)
- speed index (maximum permissible tyre speed)
- tyre age
- causes and effects of tyre wear
- measures to be taken in the event of tyre damage
- tyre types for specific regions, areas of operation or conditions of vehicle use
- tyre modification options

Modifications to the brake system or the wheels are not permissible, nor is the use of spacer plates or brake dust shields. Any such modifications that are made will invalidate the vehicle's general operating permit.

⚠ WARNING

For safety reasons, Mercedes-Benz recommends that you only use tyres and wheels which have been specially approved for your vehicle by Mercedes-Benz. These tyres and wheels are specially adapted for the vehicle's handling characteristics, comfort and wear, as well as for use with the control systems, such as ABS or ESP®. If you use other tyres and wheels, Mercedes-Benz cannot accept any responsibility for damage which may occur as a result. You can obtain information about tyres and wheels from any Mercedes-Benz Service Centre.

If you fit tyres and wheels other than those tested and recommended for Mercedes-Benz, characteristics such as handling, noise levels, fuel consumption and wear, etc. may be adversely affected. In addition, when driving with a load, dimensional variations and different tyre deformation characteristics could cause the tyres to make contact with the bodywork and axle components. This could result in damage to the tyres or the vehicle.

Run in new tyres at moderate speeds for the first 100 km.

You can find further information on winter tyres (▷ page 184) and snow chains (▷ page 185) in the "Operation" section.

The wheel size and the permissible combination of tyres and wheels can be found in the "Technical data" section (▷ page 290).

⚠ WARNING

Loose wheel nuts or bolts could cause you to lose a wheel while the vehicle is in motion. You could lose control of the vehicle as a result, cause an accident and injure yourself or others.

Therefore, you should tighten the wheel nuts or wheel bolts regularly, at least once a year, to the specified tightening torque.

You can find further information about the tightening torque for wheel nuts or wheel bolts in the "Technical data" section (▷ page 267).

Tyre pressure

⚠ WARNING

Always observe the specified tyre pressures for your vehicle.

The tyre temperature and pressure increase when the vehicle is in motion. Therefore, you should never reduce the pressure of warm tyres. The pressure would then be too low once the tyres have cooled.

The tyre pressure must be adjusted to the load of the vehicle. If the tyre pressure is too low, it may cause the tyre to burst, especially at higher loads and speeds. A tyre pressure

that is too high can cause a longer braking distance and a poorer tyre grip.

If the tyre pressure has been incorrectly set, you could lose control of your vehicle, causing an accident and injuring yourself or others.

Check the specified tyre pressure regularly when the tyres are cold. You should do this at least once every two weeks and before long journeys.

Correct the tyre pressure before loading the vehicle. Check tyre pressures after loading the vehicle and correct them as necessary.

- If the tyre pressure is too low, it can cause excessive tyre temperatures, increased tyre wear, altered directional stability and increased fuel consumption.
- If the tyre pressure is too high, it can cause a longer stopping distance, poorer tyre traction and increased tyre wear.
- Valve caps on the tyre valves protect the valve core from moisture and dirt. You must therefore always screw the valve caps tightly onto the tyre valves.
- Any of the following may cause repeated loss of tyre pressure:
  - external damage
  - foreign objects in the tyre tread
  - foreign objects between the tyres (on vehicles with twin tyres)
  - cracks or bulges
  - a leaky tyre valve

You can find the tyre inflation pressure tables in the "Technical data" section (▷ page 290).

Tyre valve (snap-in valve)

⚠ **WARNING**

Vehicles without a tyre pressure monitor only:

For safety reasons, Mercedes-Benz recommends that you only use tyre valves manufactured by Schrader. These have been tested for use in your vehicle.

Use type TR 414 tyre valves (for vehicles with single tyres) or type TR 418 tyre valves (for vehicles with twin tyres) for a tyre pressure up to 4.2 bar. For a tyre pressure of more than 4.2 bar you must use a TR 600 tyre valve.

Type TR 414 and TR 418 tyre valves could be damaged if tyre pressure exceeds 4.2 bar.

Using tyre valves from other manufacturers may lead to tyre pressure loss and may thus impair driving safety.

! No additional components (non-return valves, etc.) may be screwed onto the tyre valve. The tyre valves could be damaged as a result.

Tyre tread

A minimum tyre tread depth is specified by law. You should observe the respective country-specific legal requirements.

⚠ **WARNING**

You should always make sure that there is sufficient tyre tread. Low tyre tread depth increases the risk of aquaplaning when driving in heavy rain or slush and at high speeds. The tyre tread is no longer able to route the water away. For example, when the tread depth is less than 3 mm, tyre grip is drastically reduced on wet roads.

You could lose control of the vehicle as a result, cause an accident and injure yourself or others.

For safety reasons, you should have the tyres replaced before they reach the minimum tread depth as specified by law.

Tyre condition

Check the tyre condition regularly, at least once every two weeks and before long journeys, e.g. for:

- external damage
- objects in the tyre tread
- objects between the tyres (on vehicles with twin tyres)

- cracks, bulges
- tyre tread depth and one-sided or uneven tread wear. Turn the front wheels inwards to check the inside of the front wheels better. Always check the insides of the tyre tread on the rear wheels too.

⚠ WARNING

Note that cracks, bulges and other damage can cause a tyre to burst. This could cause you to lose control of the vehicle, causing an accident and injuring yourself or others. Have damaged tyres replaced immediately.

Tyre age

Tyres age, even if they are rarely used or not used at all. Operating and driving safety diminishes with tyre age. You should therefore have tyres which are more than six years old replaced. This also applies to the spare wheel.

Tyre damage

Tyre damage can be caused by:

- the operating conditions of the vehicle
- tyre ageing
- kerbs
- foreign bodies
- insufficient or excessive tyre pressure
- weather or environmental conditions
- contact with oil, grease or fuel

⚠ WARNING

Driving over kerbs or sharp-edged objects can cause damage to the tyre substructure which is not visible from the outside.

Damage to the tyre substructure will not be immediately apparent and can cause the tyre to burst.

You could lose control of the vehicle as a result, cause an accident and injure yourself or others.

Avoid tyre impact with kerbs or parking with part of the tyre tread on the kerb.

Tyre load capacity, speed index and types of tyre

⚠ WARNING

Exceeding the specified tyre load capacity or the permissible speed index can result in tyre damage or tyre failure. You could lose control of the vehicle as a result, cause an accident and injure yourself or others.

For this reason, use only the tyre types and tyre sizes which have been approved for your vehicle. Observe the required tyre load-bearing capacity and permissible speed index for your vehicle.

Note, in particular, the vehicle approval regulations relating to tyres in the country concerned. These regulations may specify certain tyre types for the vehicle, or may prohibit the use of certain tyre types that are permissible in other countries.

In addition, the use of a certain tyre type may be advisable in certain regions and for certain areas of operation. A specialist tyre store, a qualified specialist workshop or any Mercedes-Benz Service Centre will be able to give you further information about tyres.

Retreaded tyres

Mercedes-Benz recommends that you only use tyres and wheels which have been specially tested and approved for your vehicle by Mercedes-Benz.

Direction of rotation

Tyres with a specified direction of rotation offer additional benefits, e.g. with regard to aquaplaning. You can only take advantage of these benefits if the direction of rotation is observed. The direction of rotation is indicated by an arrow on the tyre sidewall.

Replacing tyres and wheels

- Only fit tyres and wheels of the same type and make.
- Only fit tyres of the correct size onto the wheels.
- Fit new tyres on the front wheels first if tyres of the same size are required on the front and rear wheels.

⚠ WARNING

For safety reasons, Mercedes-Benz recommends that you only use tyres and wheels which have been specially approved for your vehicle by Mercedes-Benz. These tyres and wheels are specially adapted for the vehicle's handling characteristics, comfort and wear, as well as for use with the control systems, such as ABS or ESP®. If you use other tyres and wheels, Mercedes-Benz cannot accept any responsibility for damage which may occur as a result. You can obtain information about tyres and wheels from any Mercedes-Benz Service Centre.

If you fit tyres and wheels other than those tested and recommended for Mercedes-Benz, characteristics such as handling, noise levels, fuel consumption and wear, etc. may be adversely affected. In addition, when driving with a load, dimensional variations and different tyre deformation characteristics could cause the tyres to make contact with the bodywork and axle components. This could result in damage to the tyres or the vehicle.

Run in new tyres at moderate speeds for the first 100 km.

⚠ WARNING

Only interchange the front and rear wheels if they are of the same size. If the interchanged wheels are of a different size, the handling characteristics of the vehicle can change considerably. Operating safety may no longer be guaranteed.

! On vehicles fitted with a tyre pressure monitor, electronic components are located in the wheel.

Tyre-fitting tools should not be applied in the area of the valve, as this could damage the electronic components.

Always have the tyres changed at a qualified specialist workshop, e.g. a Mercedes-Benz Service Centre.

Provided that the vehicle has the same size wheels, they can be interchanged every 5000to 10,000 km, depending on the degree of tyre wear. Do not reverse the direction of wheel rotation (▷ page 51).

Interchange the wheels before too definite a wear pattern has formed on the tyres. The front tyres typically wear more on the outer shoulder, and the rear tyres in the centre of the tread.

Clean the inside of the wheels thoroughly whenever the wheels are interchanged.

After interchanging wheels, correct the tyre pressures (▷ page 290).

You can find information about changing a wheel in the "Practical advice" section (▷ page 263).

Storing tyres

! Store tyres in a cool, dry and, if possible, dark place. Protect the tyres from oil, grease and fuel.

Never use a high-pressure device to clean the tyres. Otherwise, you could damage your wheels.

Useful information 54
Opening and closing 54
Anti-theft systems 70
Seats 71
Steering wheel 77
Mirrors 78
Instrument cluster 79
On-board computer without steering wheel buttons 81
On-board computer with steering wheel buttons 82
Power supply 98
Lighting 99
Good visibility 104
Climate control 107
Driving and parking 123
Brakes 129
Automatic transmission 131
Driving the vehicle 134
Driving systems 145
Level control 159
Features 161
Communications 166

Useful information

These Operating Instructions describe all models and standard and optional equipment of your vehicle that were available at the time of printing. Country-specific variations are possible. Note that your vehicle cannot be fitted with all of the described functions. This also applies to systems and functions relevant to safety.

Read the information on qualified specialist workshops: (▷ page 19).

Opening and closing

Keys

General notes

⚠ WARNING

Activate the child-proof door locks if children are travelling in the vehicle. The children could otherwise open the doors while you are driving, injuring themselves or others.

⚠ WARNING

Do not leave children unsupervised in the vehicle, even if they are secured in a child restraint system. Children could otherwise injure themselves on parts of the vehicle. They could be severely or even fatally injured by prolonged exposure to intense heat or cold.

If children open a door, they could:

- cause injury to other persons
- get out of the vehicle and thereby injure themselves or be injured by a passing vehicle
- sustain serious injuries if they were to fall out of the vehicle, due to its height from the ground

Always take the key with you when leaving the vehicle, even if you are only leaving for a short time.

! Do not expose the key to high levels of electromagnetic radiation since this could interfere with operation of the key.

Protect the key from moisture to prevent malfunctions.

Do not attach items to the eyelet on the emergency key element (e.g. mascots). The emergency key element could otherwise be pulled out and lost.



Key with remote control

① Battery check lamp

② To lock the vehicle centrally

③ To unlock the sliding doors and the rear door or to unlock and open/close the electric sliding door

④ Emergency key element

⑤ To unlock the vehicle centrally or unlock the front door(s) only

The vehicle's equipment includes two keys. There is an emergency key element in each key.

The key can be used to unlock the vehicle from a distance.

The key's factory setting enables you to centrally lock and unlock the following:

- the driver's and the co-driver's door
- the sliding doors
- the rear doors

Vehicles with an electric sliding door may feature the KEYLESS ENTRY function (▷ page 62).

KEYLESS ENTRY offers the following features:

- automatic opening of the sliding door as you approach the vehicle
- automatic unlocking of the driver's door as you approach the vehicle
- automatic locking of the sliding door/driver's door as you leave the area around the vehicle

Change the batteries immediately if battery check lamp ① does not light up briefly with every press of a button (▷ page 276).

To prevent theft, only use the key in the immediate vicinity of the vehicle.

In an emergency, the driver's or co-driver's door can also be unlocked manually using the emergency key element (▷ page 277).

Factory settings

▶ **To unlock centrally:** press the button.
The turn signals flash once. The anti-theft alarm system is deactivated.

If you unlock the vehicle using the key and do not open a door within 40seconds, the vehicle automatically locks again.

▶ **To lock centrally:** press the button.
The turn signals flash three times if:
- the immobiliser is activated or the anti-theft alarm system (ATA) is primed.
- all the doors are closed.

▶ Check the locking knobs on all the doors.
The locking knobs must all be in the lowered position.

Individual settings

If you frequently travel alone, you may wish to change the unlocking function of the remote control. Pressing the button then unlocks the:

- driver's and co-driver's door (panel van)

or

- driver's door (crewbus, chassis)

For vehicles with KEYLESS ENTRY, this function must be deactivated before changing the unlocking function (▷ page 62).

▶ Press and hold the and buttons simultaneously until battery check lamp ① flashes twice.

The key then functions as follows:

▶ **To unlock the driver's and co-driver's doors (panel van):** press the button once.
The turn signals flash once.

▶ **To unlock the driver's door (crewbus, chassis):** press the button once.
The turn signals flash once.

▶ **To unlock centrally:** briefly press the button twice.
The turn signals flash once.

▶ **To lock centrally:** press the button.
The turn signals flash three times when the vehicle is locked.

Restoring factory settings

For vehicles with KEYLESS ENTRY, this function must be deactivated before restoring the factory settings (▷ page 62).

▶ Press and hold the and buttons simultaneously until battery check lamp ① flashes twice.
The key unlocks the vehicle centrally again.

Unlocking the sliding doors and the rear door

When the vehicle is locked, pressing the button will unlock only the sliding doors and the rear door.

▶ Press the button.
The turn signals flash once.

Central locking

Important safety notes

You can only open a locked door from the inside if the child-proof lock has not been activated.

⚠ WARNING

Activate the child-proof door locks if children are travelling in the vehicle. The children could otherwise open the doors while you are driving, injuring themselves or others.

⚠ WARNING

Do not leave children unsupervised in the vehicle, even if they are secured in a child restraint system. Children could otherwise injure themselves on parts of the vehicle. They could be severely or even fatally injured by prolonged exposure to intense heat or cold.

If children open a door, they could:

- cause injury to other persons
- get out of the vehicle and thereby injure themselves or be injured by a passing vehicle
- sustain serious injuries if they were to fall out of the vehicle, due to its height from the ground

Always take the key with you when leaving the vehicle, even if you are only leaving for a short time.

Locking and unlocking manually

Using the central locking button, you can centrally lock/unlock either the entire vehicle or just the sliding doors and rear doors from the inside.



▶ **To lock/unlock the entire vehicle:** press upper section ① of the central locking button when the doors are closed.
When the entire vehicle is locked, the indicator lamp in the central locking button lights up.

ⓘ If the key is in position **0** or no longer in the ignition lock, the indicator lamp in the central locking button remains lit for five seconds.

On platform vehicles, the indicator lamp does not light up.

▶ **To lock/unlock the sliding doors and rear doors:** press lower section ② of the central locking button when the doors are closed.
When the sliding doors and rear doors are locked, the indicator lamp in the central locking button lights up.

Automatic locking

General notes

The vehicle locks automatically after you have pulled away.



If the automatic locking when driving function is activated, there is a risk of being locked out when the vehicle is pushed or towed.

For this reason, deactivate the automatic locking when driving function:

- before pushing the vehicle
- before towing the vehicle
- if you are only leaving the vehicle for a brief period

If activated, automatic locking is deactivated when the vehicle is unlocked or locked using the central locking button.

Automatic locking is reactivated after the ignition is switched off or a door is opened with the vehicle stationary.

Activating automatic locking when driving

- ▶ Turn the key to position **1** or **2** in the ignition lock when the doors are closed.
- ▶ **For the entire vehicle:** press upper section ① of the central locking button until the indicator lamp in the button flashes four times.
- ▶ **For the sliding doors and rear doors only:** press lower section ② of the central locking button until the indicator lamp in the button flashes four times.

Deactivating automatic locking when driving

- ▶ Turn the key to position **1** or **2** in the ignition lock when the doors are closed.
- ▶ **For the entire vehicle:** press upper section ① of the central locking button until the indicator lamp in the button flashes twice.
- ▶ **For the sliding doors and rear doors only:** press lower section ② of the central locking button until the indicator lamp in the button flashes twice.

Enhanced central locking system

The enhanced central locking system can only be operated from close range via an infrared connection between the key and the driver's door.

The key can be used to open/close the following simultaneously:

- the side windows
- the electric hinged windows

- ▶ **To open:** point the tip of the key at the driver's door handle.
- ▶ Press and hold the button until the side windows are in the desired position. To cancel the procedure, release the button.

⚠ WARNING

When you use the convenience closing feature, the central locking closes the side windows and the hinged windows. Make sure that nobody can become trapped.

Release the button if there is a danger of entrapment. Immediately press and hold the button until the side windows and the hinged windows open again.

- ▶ **To close:** close all doors.
- ▶ Point the tip of the key at the driver's door handle.
- ▶ Press and hold the button until the side windows are fully closed. To cancel the procedure, release the button.

ⓘ Make sure that all the side windows are closed before leaving the vehicle.

Ignition lock

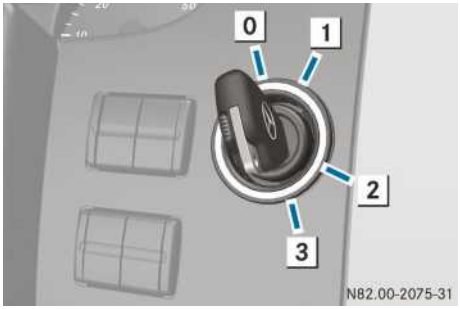

0 To insert/remove the key, lock/unlock the steering wheel

1 Power supply for some consumers, such as the radio

2 To switch on the ignition, power supply for all consumers preglow[7] and drive position

3 To start the engine

If the steering is not unlocked when you insert the key, turn the key to position **1** and move the steering wheel slightly.

On vehicles with a battery main switch, you must first switch on the electrical system (▷ page 98).

Driver's door and co-driver's door

⚠ WARNING

Make sure that nobody can become trapped as you close and open the doors. Exercise particular care, especially if children are near the vehicle.

Only open the doors when road and traffic conditions permit. Make sure that there is sufficient clearance when opening the doors.

You could otherwise cause injury to yourself and others.

You can open the driver's or co-driver's door from the inside at any time, even if it is locked.

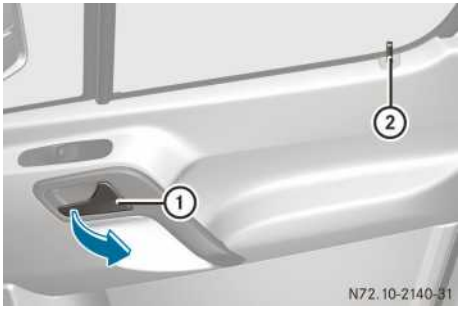

▶ Pull door handle ①.
Locking knob ② pops up.
The door opens.

Sliding door

General notes

⚠ WARNING

Make sure that nobody can become trapped as you close and open the doors. Exercise particular care, especially if children are near the vehicle.

Only open the doors when road and traffic conditions permit. Make sure that there is sufficient clearance when opening the doors.

You could otherwise cause injury to yourself and others.

⚠ WARNING

If the vehicle is parked on an incline, the sliding door may move of its own accord if it is open but not engaged. You and others could then become trapped.

Make sure that the sliding door is engaged in the active retainer.

The sliding door is equipped with an active retainer, which engages the door at the end stop when opened.

The sliding door of your vehicle can be equipped with an electrical step. When opening and closing the sliding door, observe the instruc-

7 Only on vehicles with a diesel engine.

tions relating to the electrical step (▷ page 63).

ⓘ Your vehicle may be equipped with a long sliding door with an intermediate detent.

You can also lock the sliding door in place around halfway when opening/closing. If you do this, the door does not have to be opened fully when getting into or out of the vehicle. The sliding door is not fully engaged when in the intermediate detent.

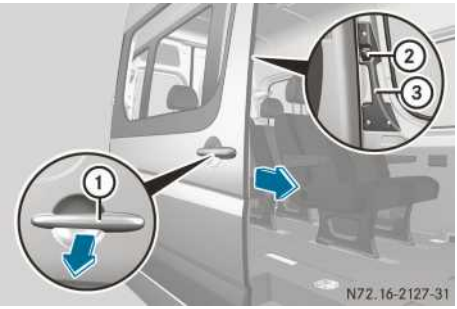

Opening/closing the sliding door from the outside

- ▶ **To open:** pull door handle ①.
  The sliding door opens.
- ▶ Slide the sliding door by handle ① back to the stop.
- ▶ Check the sliding door detent.
  The sliding door must be engaged.
- ▶ **To close:** pull door handle ① in the direction of closing.
  The sliding door is released from the detent.
- ▶ Holding door handle ①, slide the door firmly towards the front until it engages.

Opening/closing the sliding door from the inside

You can only open a sliding door from the inside if the child-proof locks have not been activated. The locking knob pops up when you open a locked sliding door. Only this sliding door is unlocked. The other doors remain locked.

- ▶ **To open:** press button ②.
- ▶ Slide the sliding door by handle ③ back to the stop.
- ▶ Check the sliding door detent.
  The sliding door must be engaged.
- ▶ **To close:** slide the sliding door firmly forwards by handle ③ until it engages.

Electrical closing assist

If your vehicle is fitted with electrical closing assist, you will require less force to close the sliding door.

⚠ **WARNING**

Make sure that nobody can become trapped as you close the sliding door.

If there is a risk of entrapment, pull the outside door handle or press the button on the inside door handle and open the door.

Electric sliding door

General notes

Depending on the vehicle's equipment, there is an electric sliding door on the left and/or right-hand side.

You can operate the electric sliding door using the following:

- buttons on the centre console
- button in the door frame (B-pillar)
- inside door handle
- outside door handle
- key

The electric sliding door of your vehicle can be equipped with an electrical step. When opening and closing the electric sliding door, observe the instructions relating to the electrical step (▷ page 63).

⚠ **WARNING**

Only open the sliding doors when road and traffic conditions permit. Make sure that there is sufficient clearance when opening the

sliding doors. You could otherwise cause injury to yourself and others.

When opening and closing the electric sliding doors, make sure that nobody is within the operating range of the sliding door. Persons within the operating range of the sliding door could be trapped by the moving door or be otherwise injured. Exercise particular care, especially if children are near the vehicle.

Obstacle detection does not eliminate the risk of fingers or other parts of the body being trapped against the door frame and thereby causing injury. Pay particular attention when the vehicle is parked on an incline.

The sliding door may move automatically in the event of a malfunction.

If the electric drive of the sliding door is in danger of overheating, e.g. due to frequent opening and closing within a short period, the sliding door opens fully. The sliding door is then locked in place – play-protection feature. The sliding door is operational again after approximately 30 seconds.

If there has been a malfunction or if the battery has been disconnected, you can use the release catch to disconnect the sliding door from the electric motor. Then you can open or close the door manually (▷ page 278).

If there has been a malfunction, emergency operation is activated and the sliding door moves very slowly. Have the fault rectified at a qualified specialist workshop.

Opening/closing using the button

Observe the notes on obstruction detection (▷ page 62).

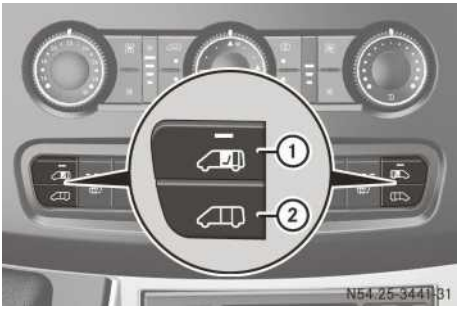

Sliding door buttons on the centre console

① To open the sliding door

② To close the sliding door/to program the key



Sliding door button in the door frame

③ To open/close the sliding door

ℹ On vehicles with a partition, the button is located on the partition next to the doorway at the level of the inside door handle.

You can only open an electric sliding door with the button in the door frame if the child-proof lock is not activated.

▶ **To close the sliding door:** briefly press button ② on the centre console or button ③ in the door frame.
The indicator lamp in upper button ① and in button ③ flash. The sliding door closes and a warning tone sounds.

ℹ The indicator lamp in the button on the centre console is lit whenever the sliding door is open.

- **To open the sliding door:** briefly press upper button ① on the centre console or button ③ in the door frame.
  The indicator lamp in the button flashes.
- **To stop the sliding door:** press the lower/upper button on the centre console or button ③ in the door frame again.

Proceed as follows in the event of unfavourable operating conditions, e.g. frost, ice or heavy soiling:

- **To close the sliding door:** press and hold button ② on the centre console or button ③ in the door frame.
  The indicator lamps in upper button ① and in button ③ flash. The sliding door closes and a warning tone sounds.
- Release button ② on the centre console or button ③ in the door frame once the sliding door has reached the desired position.
  The sliding door stops moving.
- **To open the sliding door:** press and hold upper button ① on the centre console or button ③ in the door frame.
  The indicator lamp in the button flashes.
- Release button ① on the centre console or button ③ in the door frame once the sliding door has reached the desired position.
  The sliding door stops moving.

Opening/closing using the inside and outside door handles

Observe the notes on the anti-entrapment feature (▷ page 62).

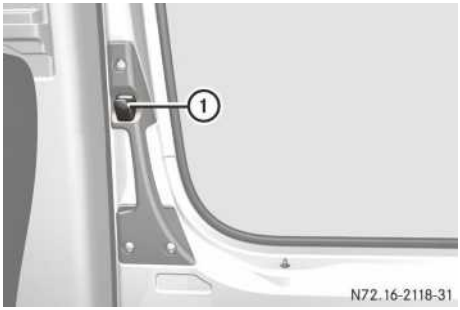

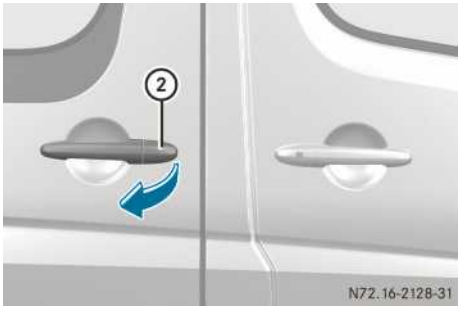

You can only open an electric sliding door with button ① if the child-proof lock is not activated.

- Press knob ① or pull outside handle ②.
  The sliding door opens or closes.
  When the sliding door closes, a warning tone sounds.
- Press knob ① or pull outside handle ② again.
  The sliding door stops moving.

Opening/closing using the key

- Press the button on the key for longer than 0.5 seconds.
  The sliding door unlocks and opens or closes.
- Press the button again.
  The sliding door stops moving.

If the vehicle is equipped with two electric sliding doors, the key can only be programmed for one of the sliding doors.

- **To program the key:** make sure that the doors are closed.
- Turn the key to position **2** in the ignition lock.
- Press the lower button on the centre console for the left-hand or right-hand sliding door and hold it for approximately five seconds.
  The indicator lamp in the corresponding upper button flashes and a tone sounds three times as confirmation.

Obstruction detection

⚠ WARNING

Only open the sliding doors when road and traffic conditions permit. Make sure that there is sufficient clearance when opening the sliding doors. You could otherwise cause injury to yourself and others.

When opening and closing the electric sliding doors, make sure that nobody is within the operating range of the sliding door. Persons within the operating range of the sliding door could be trapped by the moving door or be otherwise injured. Exercise particular care, especially if children are near the vehicle.

Obstacle detection does not eliminate the risk of fingers or other parts of the body being trapped against the door frame and thereby causing injury. Pay particular attention when the vehicle is parked on an incline.

The sliding door may move automatically in the event of a malfunction.

If the sliding door is obstructed during the opening procedure, it moves back a few centimetres in the opposite direction and stops.

If the sliding door is obstructed during the closing procedure, it opens fully again.

ⓘ Obstruction detection is less sensitive when the door is operated by pressing and holding the button on the centre console or the button in the door frame than when the door operates automatically.

Resetting the sliding door

After serious malfunctions or if the battery has been disconnected, you have to reset the sliding door.

▶ Fully close the sliding door once by pressing and holding the button on the centre console or in the door frame.

Following this:

▶ Briefly press the and button to fully open and close the sliding door once. This restores normal operation of the sliding door.

KEYLESS ENTRY

When KEYLESS ENTRY is activated and you approach the vehicle with the key, the following takes place automatically from a distance of around 0.5 m, depending on the direction from which you approach the vehicle:

- the driver's door unlocks.

Or, at a distance of approximately 1.5 m:

- the sliding door unlocks and opens.

The sliding door closes and the vehicle locks when you leave the area around the vehicle while carrying the key.

ⓘ When you leave the area around the vehicle, make sure that the turn signals flash three times. Only then is the vehicle locked correctly.

Activating/deactivating KEYLESS ENTRY

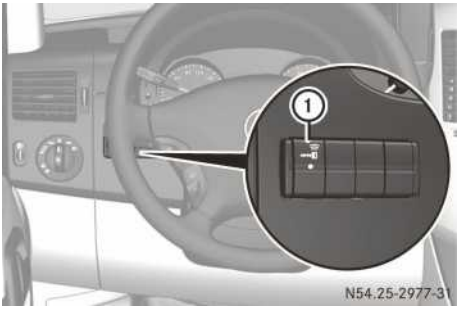

▶ Press the upper half of button ①. KEYLESS ENTRY is activated if the indicator lamp in the button comes on.

Electrical step

⚠ WARNING

If you do not use the grab handle and the step, you could injure yourself when getting in and out of the vehicle.

In order to reduce risks:

- draw the passengers' attention to the electrical step. Wait until the electrical step is fully extended.
- do not jump out of the vehicle.
- only use the grab handle and step. These are the only parts of the vehicle designed to take a person's weight.
- keep access steps and entry sills free from dirt, e.g. mud, clay, snow and ice.

⚠ WARNING

The electrical step extends automatically when the sliding door is opened and could collide with body parts. There is a danger of injury.

Therefore, take special care when opening sliding doors with electrical steps. When opening the sliding door, make sure that there is sufficient clearance space for the step.

The sliding door of your vehicle can be equipped with an electrical step.



Electrical step (example: right-hand side of the vehicle)

▶ When getting in and out of the vehicle, use grab handles and step ①.

Electrical step ① automatically extends when the sliding door is opened and retracts when it is closed.

Electrical step ① is equipped with an obstruction detection device on the front side. If the step comes into contact with an obstacle while it is extending, it stops. Once you have removed the obstacle, you will have to close the sliding door and open it again for the step to extend fully.

ⓘ If the electrical step hinders loading, you can block the step when opening the sliding door using the obstruction detection. This means that the electrical step remains retracted and a fork-lift truck or another lifting vehicle can move closer to the load compartment.

Vehicles without steering wheel buttons: if the indicator lamp in the instrument cluster lights up and a warning tone sounds, electrical step ① is malfunctioning (▷ page 228).

Vehicles with steering wheel buttons: if the `Electrical Step` message is shown in the display and a warning tone sounds, electrical step ① is malfunctioning (▷ page 237).

If electrical step ① is malfunctioning, the step may only partially extend/retract or may not extend/retract at all. If a malfunction does occur, you will have to retract and lock electrical step ① manually before continuing the journey (▷ page 279).

Before the passengers get out of the vehicle, let them know that electrical step ① might not be extended.

Rear doors

Important safety notes

⚠ WARNING

Always make sure that there is sufficient room for approaching traffic when opening the rear doors and that nobody can become trapped.

You could otherwise injure yourself or others by opening the rear doors.

⚠ WARNING

The rear lights will be covered if you open the rear doors to the 90° detent position.

The vehicle will then be unsafe as its rear lights will not be visible for approaching traffic. Other road users may not realise until too late that it is an obstruction. This could lead to an accident.

You should ensure that the vehicle is visible from the rear in accordance with the relevant national regulations, by using the warning triangle for instance.

! Make sure that there is sufficient clearance when opening the rear doors. You could otherwise damage the vehicle and objects in close range of the rear doors.

You can lock the rear doors at an angle of 90°, 180° and 270°. Always make sure that the open rear door is correctly engaged in the detent.

Opening the rear doors from the outside

Opening the right-hand rear door

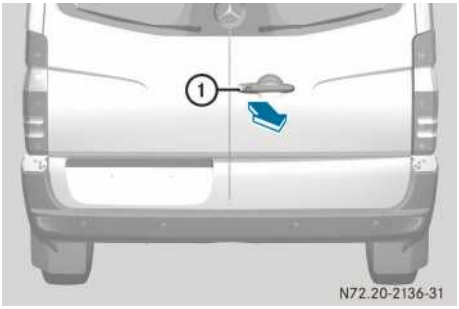

- ▶ Pull handle ①.
- ▶ Swing the rear door to the side until it engages.

Opening the left-hand rear door

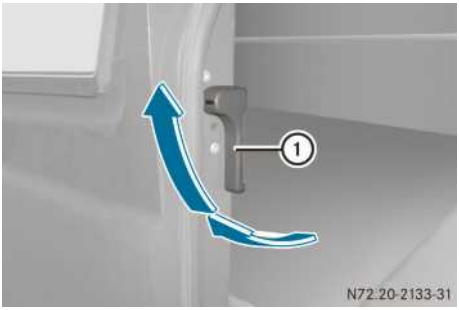

- ▶ Make sure that the right-hand rear door is open and engaged.
- ▶ Pull release handle ① in the direction of the arrow.
- ▶ Swing the rear door to the side until it engages.

Opening the rear doors to an angle of 180° or 270°



ⓘ Vehicles with 270° pivoting rear doors:

If you prefer to keep door retainer ① out of the loading area when loading the vehicle, you can swivel it 180° against the spring force and onto the door and engage it. The door retainer remains in this position and will not swivel back to its original position.

Before closing the door, release door retainer ① from the detent and return it to its original position.

- ▶ Open the rear door to about 45°.
- ▶ Pull and hold door retainer ① in the direction of the arrow.
- ▶ Open the rear door more than 90°, so that the door retainer cannot engage.
- ▶ Release the door retainer and open the door to an angle of 180° or 270°.

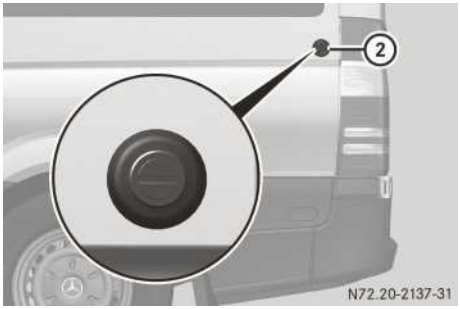

- ▶ With the rear door opened to an angle of 270°, push it against magnetic door retainer ② on the side wall.
  When the magnet on the rear door is in contact with magnetic door retainer ②, the rear door is held in this position.

Closing the rear doors from the outside

⚠ WARNING
Make sure that nobody can become trapped as you close the rear doors.

- ▶ Pull the rear door away from magnetic door retainer ②.
- ▶ Close the left-hand rear door firmly from the outside.
- ▶ Close the left-hand rear door firmly from the outside.

Opening/closing the rear doors from the inside

ⓘ You can only open the locked rear doors from the inside if the child-proof locks have not been activated.

On panel vans and crewbuses, the handle is on the inside of the right-hand rear door. If a white marking is visible, this indicates that the door is unlocked.

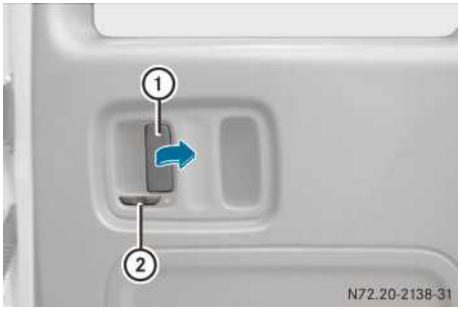

Rear door

- ▶ **To unlock:** slide latch ② to the left.
  You will see a white marking.
- ▶ **To open:** pull opening lever ① up and open the rear door.

ⓘ Latch ② slides to the left when you open a locked rear door from the inside. The white section is visible. Only the rear door unlocks. The other doors remain locked.

⚠ WARNING
Make sure that nobody can become trapped as you close the rear doors.

- ▶ **To close:** make sure that the left-hand rear door is closed.
- ▶ Pull the rear door firmly by the door handle to close it.
- ▶ **To lock:** slide latch ② to the right.
  The white section is no longer visible.

Partition sliding door

Important safety notes

⚠ WARNING
If the partition sliding door is open and not engaged, it could move automatically while the vehicle is in motion. You or others could become trapped or could be distracted from the traffic conditions, thus causing an accident.

Before driving off, make sure that the partition sliding door is closed and that the lock is engaged.

⚠ WARNING

Make sure that nobody can become trapped as you close the partition sliding door.

The partition sliding door is in the partition between the cab and the load compartment.

Opening/closing the partition sliding door from the cab

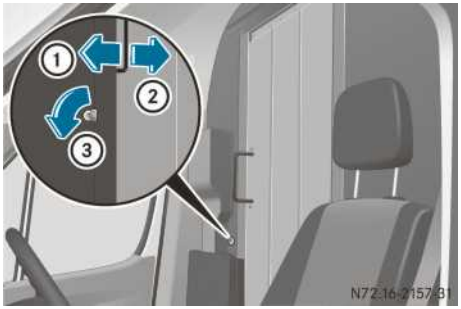

- **To open:** turn the key anti-clockwise ③.
  The sliding door is unlocked.
- Slide the sliding door to the stop in the direction of arrow ②.
- **To close:** slide the sliding door in the direction of arrow ① until it engages.
  The sliding door can be locked using the key.

Opening/closing the partition sliding door from the load compartment

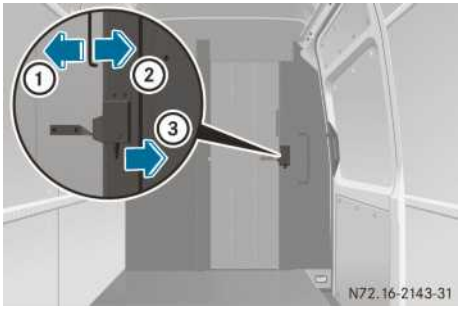

- **To unlock:** press the catch in the direction of arrow ③.
  The sliding door is unlocked.
- Slide the sliding door to the stop in the direction of arrow ①.
- **To close:** slide the sliding door in the direction of arrow ② until it engages.

Platform truck dropsides

⚠ WARNING

The platform dropsides could open of their own accord while the vehicle is in motion if they are not properly locked. You could, for example, lose your load, thereby endangering other road users.

For this reason, please make sure that all platform dropsides are properly locked before pulling away.

Make sure that nobody can become trapped as you close the platform dropsides. Be especially careful if there are small children in the vicinity of the vehicle.

⚠ WARNING

Always release the platform dropside catches carefully. This will prevent injury.

The platform dropsides could be supporting a load depending on type and positioning of the load (e.g. bulk goods or a load that has slipped).

Be particularly careful if you require more effort than usual to release the platform dropside catches. The platform dropside could then fold down suddenly. If necessary, redistribute the load, so that pressure is removed from the platform dropside that is to be opened.

Be particularly careful when releasing the platform dropsides. Only release the front platform dropside catches after you have released the retaining rope snap hook from the securing eyelet on the tailgate.

⚠ WARNING

The rear lamps are concealed when the tailgate is opened.

The vehicle is then not sufficiently safeguarded at the rear and may only be seen by other road users when they are close to the vehicle. This could lead to an accident.

In this case, therefore, you should make sure that the vehicle is safeguarded at the rear in accordance with national legal requirements, e.g. with a warning triangle.

Opening/closing the platform tailgate



- **To open:** hold the dropside.
- Push lever ① up as far as it will go.
- Repeat the procedure on the other side of the dropside.
- Fold the platform dropside down to the 90° position.

It is necessary to release the restraining cables if you wish to fold the platform dropside down fully.

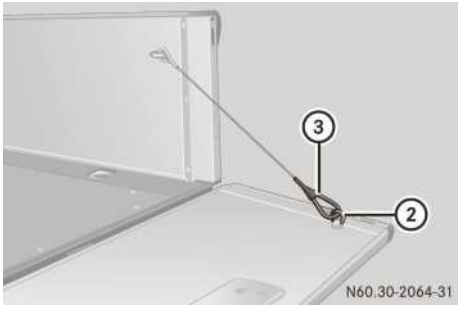

- Raise the platform dropside and remove snap hook ③ of the retaining cable from eyelet ②.
- Repeat the procedure on the other side of the dropside.
- Fold the platform dropside down carefully.
- **To close:** fold the platform dropside upwards and hold it there.
- Hang snap hook ③ into eyelets ②.
- Fold up the dropside and hold it there.
- Push lever ① down as far as it will go.
- Repeat the procedure on the other side of the dropside.

Removing/installing platform dropsides

Take care when removing/installing platform dropsides. Carry out this procedure with the help of a second person.

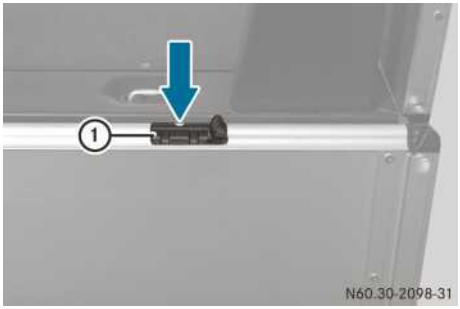

- **To remove:** fold the platform tailgate down.
- Fold the platform dropside down carefully.
- Lever the platform dropside locking pawl ① out of its guide using the screwdriver from the vehicle tool kit and applying it in the recess (arrow).
- Pull the platform dropside off the hinge bolt and remove.
- **To install:** carefully position platform dropside on the hinge bolt, making sure that

locking pawl ① on the platform dropside is in the horizontal position.

- ▶ Push the platform dropside forwards.
- ▶ Insert locking pawl ① and fold platform dropside up.

Opening/closing the windows

Side windows

Reset the side windows if there has been a malfunction or an interruption in the voltage supply (▷ page 68).

⚠ WARNING

Make sure that nobody can become trapped between the side window and the door frame when a side window is opened. Do not touch or lean against the side window during the opening procedure. You could become trapped between the side window and the door frame as the side window moves down. If there is a risk of becoming trapped, release the switch or pull the switch upwards to close the side window again.

⚠ WARNING

Make sure that nobody can become trapped as you close a side window. If there is a risk of becoming trapped, release the switch or press it again to open the side window again.

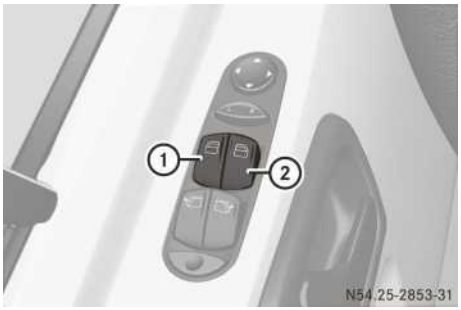

Control panel (example: driver's door)

① Power window, left

② Power window, right

- ▶ Turn the key to position **2** in the ignition lock.
- ▶ **To open/close:** pull or press switch ① or ② until the window has reached the desired position.

If you press the switch beyond the pressure point and then release it, the window opens automatically. To stop the movement, press or pull the switch again.

ⓘ You can close the window on the driver's side automatically. If you pull switch ① beyond the pressure point and then release it, the window closes automatically. To stop the window, pull or press switch ① again.

⚠ WARNING

Do not leave children unsupervised in the vehicle, even if they are secured in a child restraint system. Children could otherwise injure themselves on parts of the vehicle. They could be severely or even fatally injured by prolonged exposure to intense heat or cold.

If children open a door, they could:

- cause injury to other persons
- get out of the vehicle and thereby injure themselves or be injured by a passing vehicle
- sustain serious injuries if they were to fall out of the vehicle, due to its height from the ground

Always take the key with you when leaving the vehicle, even if you are only leaving for a short time.

Resetting the side windows

Reset the side windows if there has been a malfunction or an interruption in the voltage supply.

- ▶ Pull the two power window switches and hold for approximately one second after closing the side window.

Sliding windows

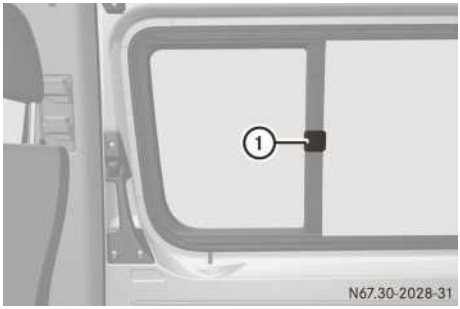

① Handle

⚠ WARNING

Make sure that nobody can become trapped as you operate the sliding window or the sliding door with sliding window.

Always take the key with you when leaving the vehicle, even if you are only leaving it for a short time.

Never leave children unsupervised in the vehicle.

▶ **To open/close:** press pinch grips ① together and move the sliding window to the desired position.
The sliding window must engage in the corresponding position. The pinch grips must engage audibly and fit flush when the window is closed.

Hinged windows

⚠ WARNING

Make sure that nobody can become trapped as you close a hinged window.

Always take the key with you when leaving the vehicle, even if you are only leaving it for a short time.

Never leave children unsupervised in the vehicle.

Manually operated hinged windows

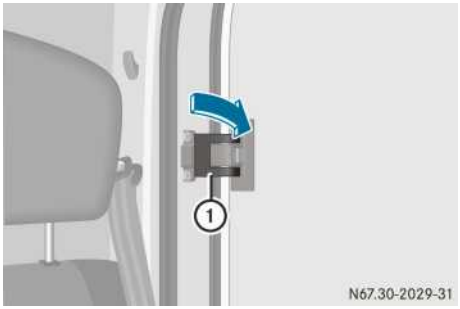

▶ **To open:** hold latch ① by the handle and turn it towards the front.

▶ Using latch ①, push the hinged window outwards as far as it will go.

▶ **To close:** hold latch ① by the handle and turn it towards the rear.

▶ Swing the hinged window in and press latch ① towards the rear until it engages.

Electric hinged windows

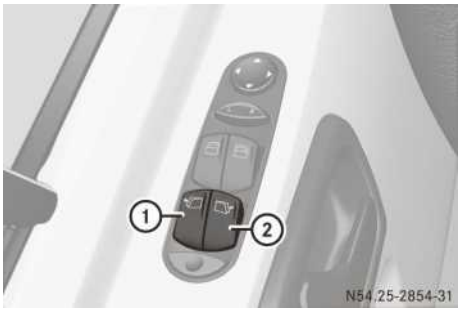

Driver's door control panel

① Hinged window, rear left

② Hinged window, rear right

▶ **To open:** press and hold switch ① or ② until the hinged window is in the desired position.

⚠ WARNING

Make sure that nobody can become trapped as you close a hinged window. If there is a risk of becoming trapped, release the switch or

press it again to open the hinged window again.

ⓘ If you press the switch beyond the pressure point and then release it, the hinged window opens automatically. To stop the window, pull or press the switch again.

▶ **To close:** pull switch ① or ② until the hinged window is in the desired position.

Anti-theft systems

Immobiliser

The immobiliser prevents the vehicle from being started without the correct key.

▶ **To activate:** remove the key from the ignition lock.

▶ **To deactivate:** insert the key into the ignition lock and turn to position **2**.

ATA (anti-theft alarm system)

If the alarm system is primed, a visual and audible alarm is triggered when the following are opened:

- a door
- the bonnet

The alarm is not switched off, even if you immediately close the open door that had triggered it, for example.

▶ **To prime:** close all doors.

▶ Lock the vehicle using the button on the key.
The indicator lamp in the upper central locking button (▷ page 56) flashes.

▶ **To disarm:** unlock the vehicle using the button on the key.
The indicator lamp in the upper central locking button (▷ page 56) goes out.

ⓘ The vehicle locks again automatically if you do not open a door within 40 seconds after unlocking the vehicle.

ⓘ The alarm system will be triggered if the vehicle was previously locked with the key and is then unlocked from the inside.

▶ **To stop the alarm:** insert the key into the ignition lock.

or

▶ Press the button on the key.
The alarm is switched off.

Tow-away protection

A visual and audible alarm is triggered if the inclination of the vehicle changes when tow-away protection is primed.

ⓘ The alarm signal is triggered shortly before the wheel leaves the ground if the vehicle is being jacked up on one side, for example.

Tow-away protection is automatically primed approximately 20 seconds after you lock the vehicle.

Tow-away protection is automatically deactivated when you unlock the vehicle.

Deactivate tow-away protection if the vehicle is being transported or loaded onto another vehicle. This will prevent a false alarm.



- ▶ **To deactivate for transportation:** turn the key in the ignition lock to position **0** or **1** or remove the key.
- ▶ Press button ①.
  Indicator lamp ② lights up for approximately five seconds after the button is released.
- ▶ Lock the vehicle with the key.
  Tow-away protection remains deactivated until you lock the vehicle again.

Interior motion sensor

If the anti-theft alarm system is primed and the vehicle is locked, a visual and audible alarm is triggered if one of the side windows or the rear window on your vehicle is smashed and someone reaches into the vehicle interior, for example.

ⓘ If the interior motion sensor is primed and the auxiliary heating system (▷ page 115) switches on, a false alarm may occur as a result of interior temperature monitoring. In this case, either deactivate the interior motion sensor or switch off the auxiliary heating.

Priming the interior motion sensor

- ▶ Close the side windows.
  This will prevent false alarms.
- ▶ Lock the vehicle.
  The interior motion sensor is primed after approximately 40 seconds.

ⓘ Do not leave anything (e.g. mascots or coat hangers) hanging on the rear-view mirror or on the grab handles on the roof lining. This will prevent a false alarm.

Deactivating the interior motion sensor

Deactivate the interior motion sensor if people or animals remain in the locked vehicle or the vehicle is being transported, e.g. on a ferry. This will prevent a false alarm.



- ▶ Turn the key to position **0** or **1** in the ignition lock or remove the key.
- ▶ Press button ①.
  Indicator lamp ② lights up for approximately five seconds after the button is released.
- ▶ Lock the vehicle with the key.
  The interior motion sensor remains deactivated until you lock the vehicle again.

Seats

Driver's and co-driver's seats

Standard/luxury/suspension seat

⚠ WARNING

Adjusting the driver's seat while driving can distract you from traffic conditions. Unexpected movements of the seat could cause you to lose control of the vehicle and cause an accident.

Only adjust the driver's seat when the vehicle is stationary and the parking brake is engaged.

⚠ WARNING

Make sure that nobody can become trapped as you adjust the seat. Never place your hands under the seat or in the vicinity of moving parts.

Your seat must be adjusted in such a way that you can wear the seat belt correctly.

Observe the following points:

- Position the backrest in an almost vertical position so that you are sitting virtually upright.
- Avoid seat positions that prevent the seat belt from being routed correctly. The shoulder section of the belt must be routed over the middle of your shoulder and be pulled tight against your upper body. The lap belt must always pass across your lap as low down as possible, i.e. over your hip joints. Do not drive with the backrest reclined too far back.
- Your arms should be slightly bent when you are holding the steering wheel.
- The distance from the pedals should be such that you can depress them fully.
- Adjust your head restraint so that its upper edge is at the same level as the top of your head.
- Make sure that you hear the seat engage. Otherwise, the seat is not correctly locked in place.

Failing to observe these instructions may lead to injury.

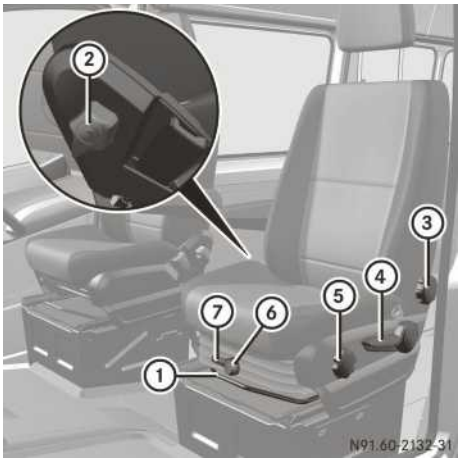

① Seat fore-and-aft adjustment
② Lumbar support adjustment
③ Seat backrest adjustment
④ Seat height adjustment
⑤ Seat cushion angle adjustment
⑥ Seat suspension adjustment
⑦ Seat suspension lock

ⓘ Depending on the seat model, some adjustments may not be available.

▶ **To adjust the seat fore-and-aft position:** pull lever ① up.
▶ Slide the seat forwards or back until you can depress the pedals.
▶ Release lever ①.
▶ Slide the seat forwards or back until you hear it engage.

▶ **To adjust the backrest:** turn handwheel ③ towards the front.
The seat backrest moves to a vertical position.
▶ Turn handwheel ③ towards the rear.
The seat backrest tilts towards the rear.

▶ **To adjust the seat height:** press or pull lever ④ repeatedly until you have reached the desired seat height.

▶ **To adjust the seat angle:** turn handwheel ⑤ towards the front.
The front of the seat cushion is lowered.
▶ Turn handwheel ⑤ towards the rear.
The front of the seat cushion is raised.

ⓘ The lumbar support allows you to use the backrest to increase the support provided to the lumbar spine.
When the lumbar support is correctly adjusted, it reduces strain on your back while driving.

▶ **To adjust the lumbar support:** turn handwheel ② upwards.
This increases the support provided to the lumbar region.
▶ Turn handwheel ② downwards.
This reduces the support provided to the lumbar region.

The seat suspension must be adapted to your body weight. Adjust the seat suspension only while the seat is unoccupied.

- **To adjust the seat suspension:** take your weight off the seat.
- Use handwheel ⑥ to select the body weight (between 40 and 120 kg) for optimal seat suspension.
  The seat suspension will become more rigid the higher you set the weight. It will then not move as far.

If the seat moves up and down frequently and to a great extent, you can lock the seat in the lower movement range.

- **To engage the seat suspension lock:** turn lever ⑦ down.
  When it next moves, the seat will lock in position.

ⓘ The seat suspension lock will only engage if your body weight equals or exceeds the weight selected for the seat suspension.

- **To release the seat suspension lock:** turn lever ⑦ up.
  The seat can now move up and down again.

Swivelling front seats

⚠ WARNING

Do not start the engine unless the driver's and co-driver's seats are facing in the direction of travel and are locked in position. Only adjust the seats when the vehicle is stationary and the parking brake is applied. You could otherwise lose control of the vehicle as a result of sudden seat movements and thereby cause an accident.

The safety systems only work when the driver's and co-driver's seats are facing in the direction of travel.

The driver's seat and co-driver's seat can be rotated through 180°.

The seats engage when facing in the direction of travel as well as when facing in the opposite direction and also engage at an angle of 50° to the door.

❗ When rotating the seats, make sure that there is sufficient space to do so.

Move the seat forward or back first. This will help to avoid contact with other parts of the interior.

Push the handbrake lever down to the stop.

The parking brake or handbrake lever could otherwise be damaged.

ⓘ Always slide the co-driver's seat forwards before rotating it (▷ page 72).

- Make sure that the parking brake has been engaged and that the handbrake lever has been pushed down to the stop (▷ page 131).
- Adjust the steering wheel to provide the necessary space to rotate and adjust the driver's seat (▷ page 77).

⚠ WARNING

When releasing and rotating the seats, make sure that you do not trap yourself or others.

Never place your hands under the seat or in the vicinity of moving parts.

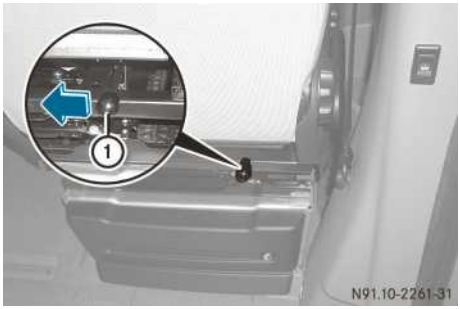

Seat release (example: co-driver's seat)

- **To rotate the seat:** push lever ① on the rear of the seat towards the centre of the vehicle and slightly rotate the seat inwards. The swivelling mechanism is now released.
- Release lever ①.
- Rotate the seat inwards to the desired position.

⚠ WARNING

When the seat is facing in the opposite direction to the direction of travel and has been moved to the rearmost position, you could knock against the exposed frame and be injured.

Therefore, always move the seat to a central position above the seat base when leaving it unoccupied. Inform others travelling with you of this risk.

Twin co-driver's seat

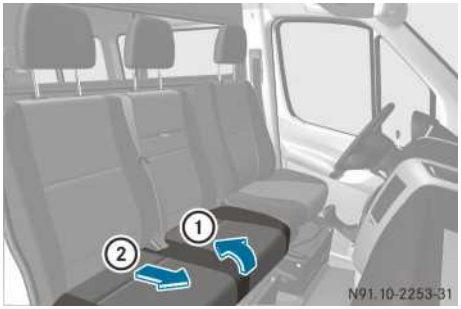

- ▶ **To fold the seat cushions forwards:** lift the seat cushion out of front anchorage ①.
- ▶ Pull the seat cushion forwards slightly and out of rear anchorage ②.
- ▶ Fold the rear edge of the seat cushion up.

ⓘ You can stow various articles in the space under the twin co-driver's seat.

- ▶ **To fold the seat cushion back:** fold down the seat cushion by the rear edge.
- ▶ Slide the seat cushion under the seat backrest into rear anchorage ②.
- ▶ Push down on the seat cushion at the front until it engages in front anchorage ①.

Estate rear seats and rear bench seat

Crewcab rear bench seat



- ▶ **To fold up the rear bench seat:** lift seat cushion ① out of the front anchorage and fold it upwards in the direction of the arrow.

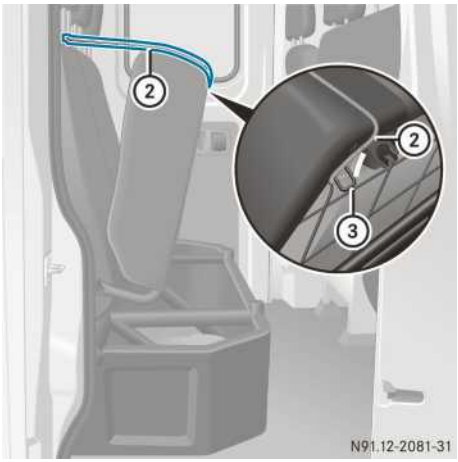

⚠ WARNING

Always secure the folded-up seat cushion with the retainer loop. The seat cushion could otherwise drop down unexpectedly and thereby cause injury to yourself or others.

ⓘ The retainer loops are secured to the outer head restraints.

▶ Attach retainer loop ② to hook ③ underneath folded-up seat cushion ①.

! The retainer loop is neither a grab handle for people to use nor a securing point for loads. It may tear if used incorrectly.

⚠ **WARNING**

When folding down the seat cushion, make sure that nobody can become trapped.

▶ **To fold down the bench seat:** hold seat cushion ① and detach retainer loop ② from hook ③ underneath the folded-up seat cushion.

▶ Fold down seat cushion ①.
The seat cushion engages automatically.

Crewbus rear bench seat

⚠ **WARNING**

The levers on the feet of the bench seat must be parallel to the vehicle floor. You can obtain further information from any Mercedes-Benz Service Centre.

The integrated seat belt can only offer the degree of protection for which it is designed if you install the specified rear bench seats correctly.

Keep the rear bench seat mounting shells in the vehicle floor free from dirt and foreign objects. This is the only way to guarantee that the locking mechanisms will engage securely.

For safety reasons, only have rear bench seat mounting shells retrofitted at a Mercedes-Benz Service Centre.

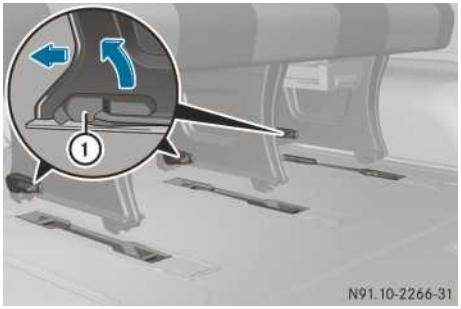

▶ **To remove the rear bench seat:** swing all levers ① of the bench seat completely upwards.
The bench seat moves back into the seat mounting shells on the vehicle floor.

▶ Lift the bench seat upwards out of the mounting shells.

▶ **To install the rear bench seat:** observe the prescribed installation position of the bench seat.
Install the two-seat bench only on the driver's side.

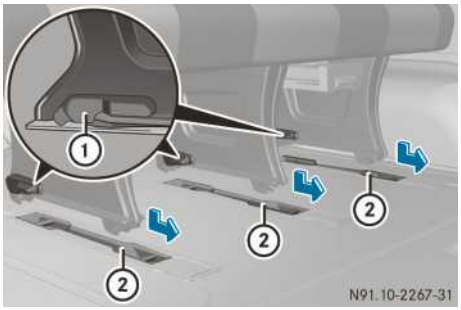

▶ Check mounting shells ② on the vehicle floor.
Mounting shells ② must be free from dirt and foreign objects.

▶ Position the bench seat in the direction of travel in corresponding mounting shells ②.

▶ Slide the bench seat forwards until you hear the locking mechanisms engage.

▶ Check levers ① on the feet of the bench seat.
All levers ① must be flush to the vehicle floor.

Folding seat

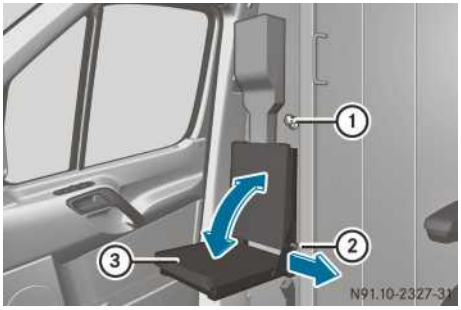

Folding seat (example with partition sliding door)

⚠ WARNING

When folding down the seat cushion, make sure that nobody can become trapped.

If the key is inserted in the lock of the partition sliding door the risk of injury to the co-driver in the case of steering movements and in the event of an accident is increased.

Remove the key of the partition sliding door before using the folding seat.

- ▶ Remove key ① from the partition sliding door.
- ▶ Pull the grip of catch ② in the direction of the arrow and fold seat cushion ③ up or down.
- ▶ Release grip ② of seat cushion ③ in the corresponding end position.
- ▶ Move the seat cushion ③ until it engages. The grip of catch ② must lie completely on the seat frame.

Head restraints

Important safety notes

⚠ WARNING

Only drive with the head restraints fitted and adjusted correctly. You could otherwise suffer serious or fatal injuries in the area of the upper spinal column.

Adjust your head restraint so that its upper edge is at the same level as the top of your head. The back of your head should be as close as possible to the head restraint when relaxed, so that your head can be properly supported in the event of an accident.

The head restraint must be engaged in a detent.

Adjusting the head restraints

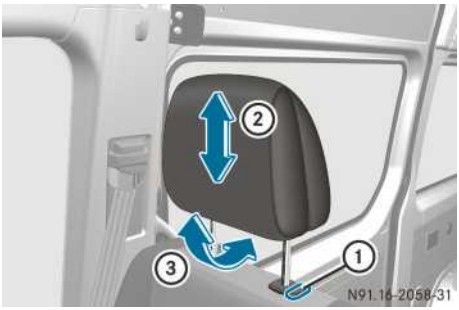

Head restraint (example: luxury head restraint on driver's seat)

① Release button

② Height adjustment

③ Angle adjustment (luxury head restraints only)

- ▶ **To raise:** pull the head restraint up to the desired position.
- ▶ **To lower:** press release button ① and slide the head restraint down to the desired position.
- ▶ **To adjust the angle:** hold the head restraint by the lower edge and tilt it to the desired position.

Removing the head restraints

- ▶ Pull the head restraint up to the stop.
- ▶ Press release button ① and pull out the head restraint.

Fitting the head restraints

! Fit the head restraints with the front side facing in the direction of travel (luxury head restraints).

- ▶ Insert the head restraint so that the rod with the detents is on the left.
- ▶ Push the head restraint down until it engages.

Armrests

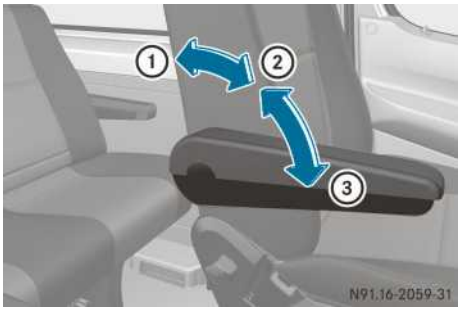

- ▶ **To set the armrest angle:** fold the armrest upwards ② by more than 45°.
  The armrest is released.
- ▶ Fold the armrest forwards ③ to the stop.
- ▶ Slowly fold the armrest upwards to the desired position.
- ▶ **To fold the armrest up:** if necessary, fold the armrest upwards ① by more than 90°.

Seat heating

⚠ **WARNING**

Repeatedly setting the seat heating to level **3** may result in excessive seat temperatures. The health of passengers that have limited temperature sensitivity or a limited ability to react to excessively high temperatures may be affected or they may even suffer burn-like injuries. Therefore, do not use seat heating level **3** repeatedly.



The three red indicator lamps in button ① show the activated heating level **1** to **3**.

The system automatically switches down from level **3** to level **2** after approximately five minutes.

The system automatically switches down from level **2** to level **1** after approximately ten minutes.

! When you leave your seat, do not place anything on the seat and switch off the seat heating. Do not switch the seat heating on when the seat is not occupied, e.g. when driving without a co-driver.The seat heating may otherwise overheat, causing damage to the seat.

At level **1**, the seat heating remains in continuous operation.

- ▶ **To switch on:** make sure that the key is in position **1** in the ignition lock.
- ▶ Press button ① repeatedly until the desired heating level is set.
- ▶ **To switch off:** press button ① repeatedly until all indicator lamps go out.

Steering wheel

⚠ **WARNING**

Only adjust the steering wheel when the vehicle is stationary. Only drive with the steering wheel locked in position.

An incorrectly secured steering wheel could make it more difficult to steer the vehicle safely since the steering wheel could move

▷▷

unexpectedly when turned. This could result in you losing control of the vehicle and causing an accident, thereby endangering yourself and others.

⚠ WARNING

Never leave children unsupervised in the vehicle. They could become trapped if they try to adjust the steering column.

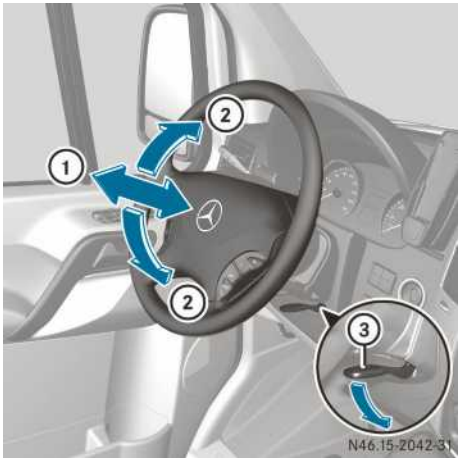

① Steering column fore-and-aft adjustment
② Steering column height
③ Lever

- ▶ Push lever ③ down to the stop.
  The steering wheel is unlocked.
- ▶ Move the steering wheel to the desired position.
- ▶ Pull lever ③ up to the stop.
  The steering wheel is locked again.

Mirrors

Rear-view mirror

- ▶ Before starting off, adjust the rear-view mirror by hand in such a way that you can get a good overview of road and traffic conditions.



- ▶ **Anti-dazzle mode:** push anti-dazzle switch ① in the direction of the arrow.

Exterior mirrors

Important safety notes

⚠ WARNING

The additional mirrors in the exterior mirrors reduce the size of the image. The objects are actually closer than they appear. You could cause an accident if you only observe the traffic through the additional mirrors.

Therefore, pay particular attention to traffic behind you when manoeuvring or overtaking using the main mirror in the exterior mirrors also and, if necessary, the rear-view mirror.

Adjusting manually

- ▶ Before starting off, manually adjust the exterior mirrors in such a way that you can get a good overview of road and traffic conditions.

Adjusting electrically

ⓘ The exterior mirrors are automatically heated at low outside temperatures.



Buttons and switches for setting the mirrors

- ▶ Before pulling away, turn the key to position **2** in the ignition lock.
- ▶ Press the switch to position ① for the left-hand exterior mirror or to position ② for the right-hand exterior mirror.
- ▶ Press button ③ at the top, bottom, right or left.

  Adjust the exterior mirrors in such a way that you can get a good overview of road and traffic conditions.

Instrument cluster

Overview

⚠ WARNING

No information will be displayed if either the instrument cluster or the display is inoperative.

As a result, you will not be able to see warning and indicator lamps or information about the driving conditions, such as speed or outside temperature. Driving characteristics may be impaired. Adjust your driving style and vehicle speed accordingly.

Contact a qualified specialist workshop immediately.

⚠ WARNING

Only operate the adjustment buttons on the instrument cluster when traffic conditions permit. You would otherwise be too distracted and could cause an accident.

Do not reach through the steering wheel to operate the adjustment button. The movement of the steering wheel would be significantly impeded. It would also distract you from traffic conditions. This could cause you to lose control of the vehicle and lead to an accident.

Do not rest your head or chest on the steering wheel or the dashboard when operating the adjustment buttons.

You will find page references for further information in the index under "Airbag".

You will find a full overview of the instrument cluster in the "At a glance" section (▷ page 27).



① Instrument cluster on vehicles without steering wheel buttons

② Instrument cluster on vehicles with steering wheel buttons

③ Adjustment buttons ⊕/⊖, menu button Ⓜ, reset button ⓪, service button (engine oil level check on vehicles with a diesel engine)

You will find information on the engine oil level check in the "Maintenance" section (▷ page 203).

The display in the instrument cluster is activated when you:

- open the driver's door
- turn the key to position **2** in the ignition lock
- press the ⓪ reset button
- switch on the lights

The display switches off automatically after approximately 30 seconds if:

- the vehicle lighting is not switched on.
- the key is in position **0** in the ignition lock.

Speedometer

ⓘ In some countries, a warning sounds when the vehicle reaches the maximum speed limit, e.g. at 120 km/h.

The speed can also be shown in the display. You can find information on the digital speedometer for vehicles without steering wheel buttons under (▷ page 81) and for vehicles with steering wheel buttons under (▷ page 85).

Rev counter

The red band in the rev counter indicates the engine's overrevving range.

To protect the engine, the fuel supply is interrupted when the red band is reached.

❗ Do not drive in the overrevving range. Doing so will damage the engine.

Environmental note

Avoid excessive engine speeds. This unnecessarily increases the fuel consumption of your vehicle and harms the environment as a result of increased emissions.

Fuel gauge

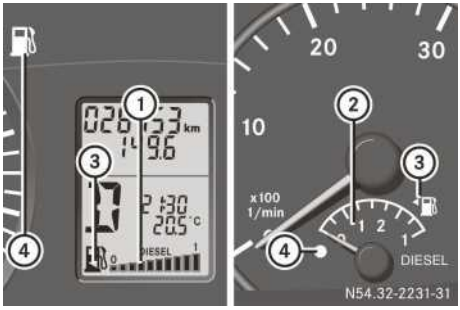

① Fuel gauge on vehicles without steering wheel buttons

② Fuel gauge on vehicles with steering wheel buttons

③ Fuel filler flap location indicator ◂: the fuel filler flap is on the left-hand side. Fuel filler flap location indicator ▸: the fuel filler flap is on the right-hand side

④ Reserve fuel warning lamp (▷ page 225)

Trip meter

▶ **To reset:** make sure that the display is showing the trip meter if you have a vehicle with steering wheel buttons (▷ page 85).

▶ Press and hold the ⓪ reset button until the trip meter is reset to 0.0.

Instrument cluster lighting

With the lights switched on, you can adjust the brightness of the instrument cluster lighting using the ⊕ and ⊖ buttons.

▶ **Brighter:** press the ⊕ button.

▶ **Dimmer:** press the ⊖ button.

ⓘ Vehicles with automatic headlamp mode: the instrument cluster lighting also adapts to automatic headlamp mode.

On-board computer without steering wheel buttons

Layout and controls

Important safety notes

⚠ WARNING

Only operate the adjustment buttons on the instrument cluster when traffic conditions permit. You would otherwise be too distracted and could cause an accident.

Do not reach through the steering wheel to operate the adjustment button. The movement of the steering wheel would be significantly impeded. It would also distract you from traffic conditions. This could cause you to lose control of the vehicle and lead to an accident.

Do not rest your head or chest on the steering wheel or the dashboard when operating the adjustment buttons.

You will find page references for further information in the index under "Airbag".

The on-board computer is activated as soon as you turn the key to position **1** in the ignition lock.

The on-board computer shows vehicle information and settings in the display.

You can control the display and the settings in the on-board computer using the adjustment buttons on the instrument cluster.

Standard display

Overview

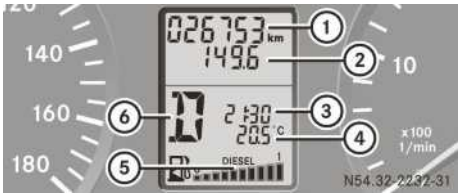

① Total distance recorder
② Trip meter or limit speed set by variable SPEEDTRONIC (▷ page 148) or permanent SPEEDTRONIC (▷ page 150)
③ Clock
④ Outside temperature or digital speedometer
⑤ Fuel gauge (▷ page 80)
⑥ Gearshift recommendation on vehicles with manual transmission (▷ page 126) or selector lever position or current shift range on vehicles with automatic transmission (▷ page 131)

Changing the standard display

▶ Turn the key to position **2** in the ignition lock.
▶ Press the Ⓜ menu button for longer than one second.
The information shown in the display changes from the outside temperature to the digital speedometer.

Outside temperature display

⚠ WARNING

At temperatures just above freezing point, the street may be icy, especially in wooded areas or on bridges. If you do not adapt your driving style to the conditions, the vehicle could skid. For this reason, adapt your driving style and speed to the weather conditions.

Changes in outside temperature are displayed with a slight delay.

Menus

Overview

Using the ⊕, ⊖, Ⓜ or ⓪ adjustment buttons, you can select the following functions:

- calling up the service due date (▷ page 198)
- checking the oil level (▷ page 203)
- preselecting/setting the auxiliary heating switch-on time (▷ page 115)
- tyre pressure monitor (▷ page 139)
- setting the time (▷ page 82)
- setting the date (▷ page 82)
- setting constant headlamp mode (▷ page 82)

▶ **To return to the standard display:** press the Ⓜ menu button for longer than one second.

or

▶ Do not press any button for 10seconds. The display accepts the changed settings.

Setting the clock

▶ Turn the key to position **2** in the ignition lock.

▶ Press the Ⓜ menu button repeatedly until the hours figure flashes.

▶ Press ⊕ or ⊖ to set the hours.

▶ Press the ⓪ reset button. The minute display flashes.

▶ Press ⊕ or ⊖ to set the minutes.

ⓘ If you keep the ⊕ or ⊖ button pressed, the value will change continuously.

Setting the date

▶ Turn the key to position **2** in the ignition lock.

▶ Press the Ⓜ menu button repeatedly until the day flashes.

▶ Press ⊕ or ⊖ to set the day.

▶ Press the ⓪ reset button. The month display flashes.

▶ Press ⊕ or ⊖ to set the month.

▶ Press the ⓪ reset button. The year display flashes.

▶ Press ⊕ or ⊖ to set the year.

ⓘ If you keep the ⊕ or ⊖ button pressed, the value will change continuously.

Setting constant headlamp mode

If you have switched constant headlamp mode on and the light switch is in the 0 position, the following light up automatically when the engine is running: the side lamps, the dipped-beam headlamps, the tail lamps and the licence plate lamps.

For safety reasons, it is only possible to change this setting when the vehicle is stationary. The factory setting is on in countries in which constant headlamp mode is mandatory.

▶ Turn the key to position **2** in the ignition lock.

▶ Press the Ⓜ menu button repeatedly until the indicator lamp in the instrument cluster flashes and the on or off message appears in the display.

▶ Press ⊕ or ⊖ to activate or deactivate constant headlamp mode.

ⓘ If you turn the light switch to or , the corresponding light is switched on. If you turn the light switch to AUTO, constant headlamp mode stays switched on.

On-board computer with steering wheel buttons

Layout and controls

The on-board computer is activated as soon as you turn the key to position **1** in the ignition lock.

WARNING

Only use the on-board computer when road and traffic conditions permit. You would otherwise be distracted and unable to concentrate properly on driving, and could cause an accident.

The on-board computer shows vehicle information and settings in the display.



Steering wheel with buttons

You can control the display and the settings in the on-board computer with the buttons on the steering wheel.

①	Display
	On-board computer operation
②	+ and − • Selects submenus • Changes values • Adjusts the volume
③	Using the telephone Accepts a call Ends a call
④	Scrolls from one menu to another Forwards Back
⑤	Scrolls within a menu Forwards Back

Several functions are combined thematically in the menus.

The display changes when you press one of the buttons on the steering wheel. You can use a function to call up information or to change the settings for the vehicle.

For example, the **AUDIO** menu has functions for operating the radio or CD player.

Controlling the audio equipment using the steering wheel buttons and making settings via the **AUDIO** menu only functions with a Mercedes-Benz audio device. If you are using audio equipment from another manufacturer, the described functions may be restricted or not available at all.

You can think of the order of the menus and of the functions within a menu as a circle:

- Press the ④ or ④ button repeatedly. The menus are displayed successively.
- Press the ⑤ or ⑤ button repeatedly. The functions in the menu/submenu are displayed successively.

Unlike in other menus, you will find submenus in the Settings menu. For information on how to use these submenus, see the "Settings menu" section (▷ page 87).

The number of menus depends on your vehicle's equipment.

Menu overview

Diagrams

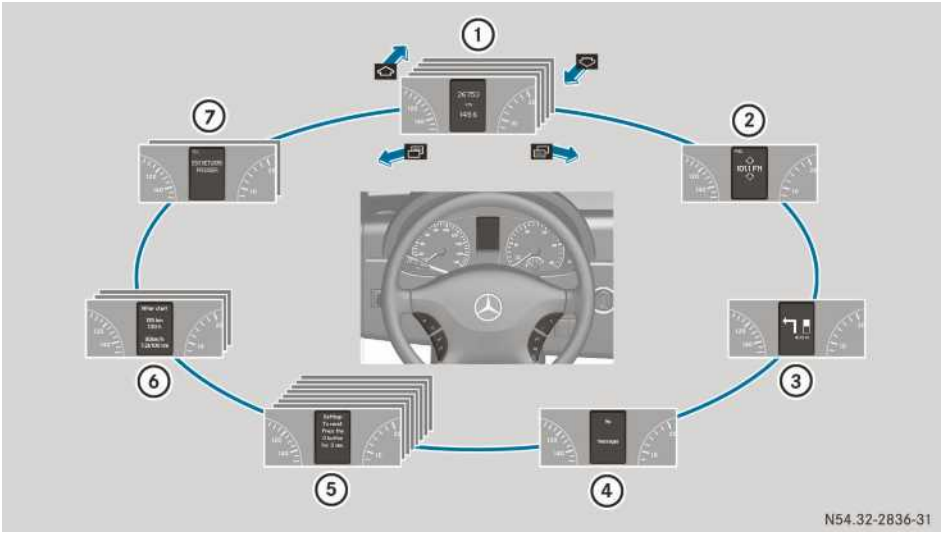

This is what the displays look like when you scroll through the menus.

Generic terms

The illustration shows the menus on a vehicle with COMAND APS.

ⓘ The generic terms in the tabular overview should make orientation easier for you. However, they are not always shown on the display.

On Sound 5/Audio 20, the on-board computer always shows the **AUDIO** and **TEL** (telephone) menus in English. This is the case even if a different language is selected for the display.

	Operation
①	Operation menu (▷ page 85) • Standard display • To call up the service due date (▷ page 198) • Tyre pressure monitor (▷ page 139) • To check the oil level (only for vehicles with a diesel engine) (▷ page 203)
②	Audio menu (▷ page 85)
③	Navigation menu (▷ page 86)
④	Message memory menu (▷ page 87)
⑤	Settings menu (▷ page 87)
⑥	Trip computer menu (▷ page 94)
⑦	Telephone menu (▷ page 95)

Operation menu

Overview

Press the ⌃ or ⌄ button to select the following functions in the **Operation** menu:

- display the trip meter and total distance recorder (standard display)
- display the coolant temperature (▷ page 85)
- call up the service due date (▷ page 198)
- tyre pressure monitor (▷ page 139)
- check the oil level (only for vehicles with a diesel engine) (▷ page 203)

Standard display

In the basic setting, the total distance recorder and the trip meter are shown in the upper part of the display. This is referred to as the standard display.

Using the steering wheel buttons

▶ Press the ⊏ or ⊐ button repeatedly until the standard display appears.

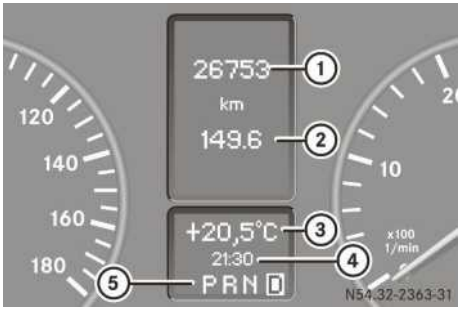

① Total distance recorder
② Trip meter
③ Outside temperature or digital speedometer
④ Clock
⑤ Gearshift recommendation on vehicles with manual transmission (▷ page 126) or selector lever position or current shift range on vehicles with automatic transmission (▷ page 131)

Displaying the coolant temperature

Using the steering wheel buttons

▶ Press the ⊏ or ⊐ button repeatedly until the standard display appears.

▶ Press the ⌃ or ⌄ button to select the coolant temperature.

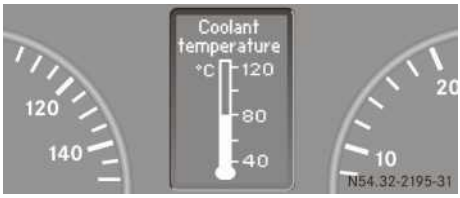

The temperature displayed may climb to 120 °C when the vehicle is being driven in normal conditions, and if the coolant contains the correct concentration of corrosion inhibitor and antifreeze. It is acceptable for the coolant temperature to rise to the end of the scale at high outside temperatures and when driving in mountainous terrain.

Audio menu

General notes

You can use the functions in the **AUDIO** menu to control the audio equipment that you have just switched on.

Operation of the audio equipment using the steering wheel buttons and making settings using the **AUDIO** menu only function as described if Mercedes-Benz audio equipment is installed. If you are using audio equipment from another manufacturer, the described functions may be restricted or not available at all.

If no audio equipment is switched on, you will see the AUDIO off message (Sound 5 or Audio 20) or AUDIO off message (Audio 50 APS or COMAND APS).

Selecting a radio station

Using the steering wheel buttons:

- ▶ Switch on the radio (see the separate operating instructions).
- ▶ Press the [ ] or [ ] button repeatedly until the display shows the currently selected station.
  The kind of search depends on the setting for radio station selection (▷ page 93).
  The nearest stored station will be selected or the station search starts (except on Audio 20).

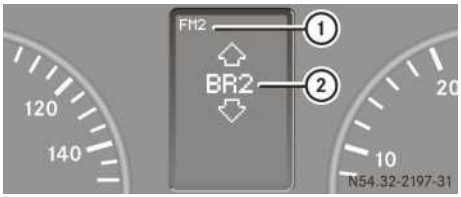

① Waveband or waveband with memory preset number
② Station or reception frequency with waveband

- ▶ Press the [ ] or [ ] button to select the desired station.

ⓘ You can only store new stations on the audio system itself. See the separate operating instructions.

You can also operate the radio in the same way as usual.

Operating the CD player

Using the steering wheel buttons:

- ▶ Switch on the radio (see the separate operating instructions) and select the CD player.
- ▶ Press the [ ] or [ ] button repeatedly until the settings for the current CD appear in the display.



Display for Sound 5 or Audio 20
① Current CD (with CD changer)
② Current track



Display for Audio 50 APS or COMAND APS
① Current CD (with CD changer)
② Current track

- ▶ Press the [ ] or [ ] button to select a CD track.

Navigation menu

In the **NAV** menu, you can choose to have navigation system route guidance shown in the display.

Using the steering wheel buttons

- ▶ Press the [ ] or [ ] button repeatedly until the Navigation menu appears in the display.
  You will see different messages in the display, depending on the status of the navigation system:

Navigation system switched off

The display shows the `NAV off` message.

- ▶ Switch on Audio 50 APS or COMAND APS (see the separate operating instructions).

Route guidance not active

The display shows the compass heading.

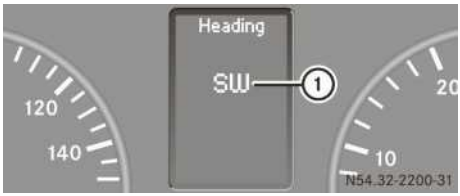

① Compass heading

Route guidance activated

The display shows, for example, the following messages:

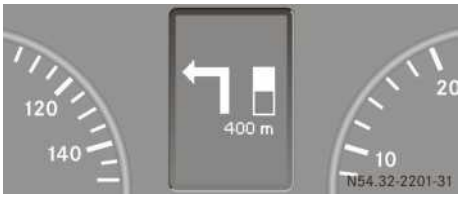

ⓘ You will find notes on how to activate route guidance in the separate operating instructions for Audio 50 APS or COMAND APS.

Message memory menu

The on-board computer stores certain display messages. In the **Message memory** menu, you can call up stored display messages.

⚠ **WARNING**

The on-board computer only records and displays malfunctions and warnings from certain systems. For this reason, you should always make sure that your vehicle is safe to use. You could otherwise cause an accident by driving an unsafe vehicle.

Using the steering wheel buttons:

▶ Press the ⏃ or ⏃ button repeatedly, until the number of stored display messages, e.g. `2 messages`, appears in the display.
If no malfunctions have occurred, the `No messages` message appears.

▶ Press ⏃ or ⏃ to scroll through the stored display messages.
Potential display messages are described in the "Practical advice" section (▷ page 232).

▶ Press the ⏃ or ⏃ button to change to a different display.

ⓘ The message memory is cleared when you switch off the ignition.

Settings menu

General notes

You will find two functions in the `Settings` menu. The function `Settings To reset: Press the 0 button for 3 sec.`, with which you can reset all settings to the factory settings. You can also use several submenus to make individual settings on the vehicle.

Using the steering wheel buttons

▶ Press the ⏃ or ⏃ button repeatedly until the `Settings` menu appears in the display.



Settings menu

Resetting all settings

You can reset the functions in all submenus to the factory settings.

Using the steering wheel buttons

▶ Press the ⊟ or ⊟ button repeatedly until the Settings menu appears in the display.

▶ Press the ⓪ reset button for about three seconds.
You will see a message in the display prompting you to press the ⓪ reset button again to confirm.

▶ Press the ⓪ reset button again.
The functions of all submenus are reset to the factory settings.

ⓘ If you do not press the ⓪ reset button a second time to confirm, the settings are retained. TheSettings menu appears again after approximately five seconds.

For safety reasons, it is not possible to reset all of the functions while the vehicle is in motion. For example, the Driv. lights function in the Lighting submenu remains unchanged.

Resetting the functions of a submenu

You can reset the functions of an individual submenu to the factory settings.

Using the steering wheel buttons

▶ Press the ⊟ or ⊟ button repeatedly until the Settings menu appears in the display.

▶ Press the ⌂ button to switch to the submenu selection.

▶ Press the + or − button to select a submenu.

▶ Press the ⓪ reset button for about three seconds.
You will see a message in the display prompting you to press the ⓪ reset button again to confirm.

▶ Press the ⓪ reset button again.
All functions of the submenu are reset to the factory settings.

ⓘ If you do not press the ⓪ reset button a second time to confirm, the settings are retained. The Settings menu appears again after approximately five seconds.

For safety reasons, it is not possible to reset all of the functions while the vehicle is in motion. For example, the Driv. lights function in the Lighting submenu remains unchanged.

Submenus in the Settings menu

Using the steering wheel buttons

▶ Press the ⊟ or ⊟ button repeatedly until the Settings menu appears in the display.

▶ Press the ⌂ button to switch to the submenu selection.

You will see the collection of submenus. There are more submenus than can be displayed at the same time.



▶ Press the + or − button to select a submenu.
The submenu currently selected is highlighted.

▶ Press the ⌂ button to select the function within a submenu.

▶ Change the setting by pressing the + or − button.
The changed setting is saved.

You can select the following submenus:

- Instrument cluster (▷ page 89)
  - Units and language settings
  - Status bar settings
- Clock/Date[8](▷ page 91)

8 The Clock/Date submenu is only available if you either have no audio system or have Sound 5/Audio 20.

- Lighting (▷ page 92)
  - Activating/deactivating constant headlamp mode and surround lighting (locator lighting)
  - Setting the exterior lighting delayed switch-off
- Vehicle (▷ page 93)
  - Setting permanent SPEEDTRONIC (▷ page 150)
  - Setting the radio station selection
  - Setting the windscreen wiper sensitivity
- Stationary heating or auxiliary heating (▷ page 115)
- Convenience (▷ page 94)
  - Key-dependent settings

Instrument cluster submenu

Selecting the unit for temperature

Using the steering wheel buttons

▶ Press the ⊏ or ⊐ button repeatedly until the Settings menu appears in the display.

▶ Press the ⌓ button to switch to the submenu selection.

▶ Press + or − to select the Inst. cluster submenu.

▶ Press the ⌓ button to select the Temperat. function.
The selection marker is on the current setting.



▶ Press the + or − button to select the unit for all messages in the display: °C (degrees Celsius) or °F (degrees Fahrenheit).

Selecting the unit for the digital speedometer

Using the steering wheel buttons

▶ Press the ⊏ or ⊐ button repeatedly until the Settings menu appears in the display.

▶ Press the ⌓ button to switch to the submenu selection.

▶ Press + or − to select the Inst. cluster submenu.

▶ Press the ⌓ button to select the Dig. speedo. function.
The selection marker is on the current setting.



▶ Press the + or − button to select the unit for the digital speedometer: km/h or mph.

Selecting the unit for the odometer

Using the steering wheel buttons

▶ Press the ⊏ or ⊐ button repeatedly until the Settings menu appears in the display.

▶ Press the ⌓ button to switch to the submenu selection.

▶ Press + or − to select the Inst. cluster submenu.

▶ Press the ⌓ button to select the Trip function.
The selection marker is on the current setting.



- Press the + or − button to select the unit for all messages in the display: km (kilometres) or miles.

Selecting the language

Using the steering wheel buttons

- Press the ⊟ or ⊟ button repeatedly until the Settings menu appears in the display.
- Press the ⌂ button to switch to the submenu selection.
- Press + or − to select the Inst. cluster submenu.
- Press the ⌂ button to select the Language function.
  The selection marker is on the current setting.



- Use the + or − button to set the language for all messages.

The languages available are:

- German
- British English
- US English
- French
- Italian
- Spanish

Selecting the display for the status bar

Using the steering wheel buttons

- Press the ⊟ or ⊟ button repeatedly until the Settings menu appears in the display.
- Press the ⌂ button to switch to the submenu selection.
- Press + or − to select the Inst. cluster submenu.
- Press the ⌂ button to select the Select displ. function.
  The selection marker is on the current setting.



- Press the + or − button to select whether to display the outside temperature or the speed (digital speedometer).
  The selected display is then shown permanently in the lower part of the display (▷ page 85).

Selecting the unit for the tyre pressure

Using the steering wheel buttons

- Press the ⊟ or ⊟ button repeatedly until the Settings menu appears in the display.
- Press the ⌂ button to switch to the submenu selection.
- Press + or − to select the Inst. cluster submenu.
- Press the ⌂ button to select the Tyre press. function.
  The selection marker is on the current setting.



▶ Press the + or − button to select the unit for the tyre pressure in the display: bar or psi.

Clock/Date submenu

ⓘ If your vehicle is equipped with a COMAND APS or Audio 50 APS navigation system, there is no Clock/Date submenu. Your navigation system receives the time and date from GPS satellites.

You have to set the time zone once in the audio system. See the separate operating instructions.

Setting the clock

ⓘ If your vehicle is equipped with a COMAND APS or Audio 50 APS navigation system, this submenu is not available.

Using the steering wheel buttons

▶ Press the or button repeatedly until the Settings menu appears in the display.

▶ Press the button to switch to the submenu selection.

▶ Press the + or − button to select the Clock/Date submenu.

▶ Press the button to select the Set clock Hours or Minutes function.



▶ Press the + or − button to set the values.

Selecting the time format

ⓘ If your vehicle is equipped with a COMAND APS or Audio 50 APS navigation system, this submenu is not available.

Using the steering wheel buttons

▶ Press the or button repeatedly until the Settings menu appears in the display.

▶ Press the button to switch to the submenu selection.

▶ Press the + or − button to select the Clock/Date submenu.

▶ Press the button to select the 12/24 h function.
The selection marker is on the current setting.



▶ Press the + or − button to select the 12 h or 24 h clock format.

Setting the date

ⓘ If your vehicle is equipped with a COMAND APS or Audio 50 APS navigation system, this submenu is not available.

Using the steering wheel buttons

▶ Press the or button repeatedly until the Settings menu appears in the display.

▶ Press the button to switch to the submenu selection.

▶ Press the + or − button to select the Clock/Date submenu.

▶ Press the button to select the Date Day or Month or Year function.



▶ Press the + or − button to set the values.

Lighting submenu

Setting constant headlamp mode

If you have set constant headlamp mode and the light switch is in the 0 position, the following light up automatically when the engine is running: the side lamps, the dipped-beam headlamps, the tail lamps and the licence plate illumination.

For safety reasons, it is only possible to change this setting when the vehicle is stationary. The factory setting is Constant in countries in which constant headlamp mode is mandatory.

Using the steering wheel buttons

▶ Press the ⊟ or ⊟ button repeatedly until the Settings menu appears in the display.

▶ Press the ⌂ button to switch to the submenu selection.

▶ Press the + or − button to select the Lighting submenu.

▶ Press the ⌂ button to select the Driv. lights function.
The selection marker is on the current setting.



▶ Press the + or − button to select the Manual or Constant (constant headlamp mode) setting.

ⓘ If you turn the light switch to ≡D or ≡O, the corresponding light is switched on. Constant headlamp mode remains activated if the light switch is turned to AUTO.

ⓘ For safety reasons, it is not possible to reset the Driv. lights function to the factory setting while the vehicle is in motion. You will see the following message in the display: Setting only possible at standstill.

Switching the surround lighting (locator lighting) on/off

If you switch the surround lighting to On, the following lamps light up in the dark after you have unlocked the vehicle using the key:

- the side lamps
- the tail lamps
- the licence plate lighting
- the foglamp

The surround lighting automatically switches off after 40 seconds or if you:

- open the driver's door
- insert the key into the ignition lock
- lock the vehicle using the key

Using the steering wheel buttons

▶ Press the ⊟ or ⊟ button repeatedly until the Settings menu appears in the display.

▶ Press the ⌂ button to switch to the submenu selection.

▶ Press the + or − button to select the Lighting submenu.

▶ Press the ⌂ button to select the Loc. lighting function.
The selection marker is on the current setting.



▶ Press the + or − button to switch the surround lighting (locator lighting) On or Off.

Setting the exterior lighting delayed switch-off

The Headlamps function enables you to set whether and for how long the exterior lighting is to remain on in the dark after closing the door.

If you have set the delayed switch-off and switch off the engine, the following remain lit:

- the side lamps
- the tail lamps
- the licence plate lighting
- the foglamp

ⓘ You can reactivate this function by opening a door within 10 minutes.

The exterior lighting is switched off after 60 seconds if you do not open a door or if you do not close an opened door after the engine has been switched off.

Using the steering wheel buttons

▶ Press the ⊂ or ⊃ button repeatedly until the Settings menu appears in the display.

▶ Press the ⌂ button to switch to the submenu selection.

▶ Press the + or − button to select the Lighting submenu.

▶ Press the ⌂ button to select the Headlamps function.
The selection marker is on the current setting.



▶ Press the + or − button to select whether and for how long you wish the exterior lighting to remain on.

Vehicle submenu

Setting the radio station selection

The Search function enables you to determine whether the radio should search for a new station or a previously stored station each time the radio is operated using the steering wheel buttons (not with Audio 20).

The Frequency setting starts the station search. The Memory setting selects the next stored station.

Using the steering wheel buttons

▶ Press the ⊂ or ⊃ button repeatedly until the Settings menu appears in the display.

▶ Press the ⌂ button to switch to the submenu selection.

▶ Press the + or − button to select the Vehicle submenu.

▶ Press the ⌂ button to select the Search function.
The selection marker is on the current setting.



▶ Press + or − to select the station search mode.

Setting the windscreen wiper sensitivity

You can use the Wipe sens. function to set the sensitivity of the rain/light sensor:

- Level 1: high sensitivity – wiping begins even in light rain
- Level 2: moderate sensitivity
- Level 3: low sensitivity – wiping only begins in heavy rain

Using the steering wheel buttons

▶ Press the ⊟ or ⊟ button repeatedly until the Settings menu appears in the display.

▶ Press the ⌂ button to switch to the submenu selection.

▶ Press the + or − button to select the Vehicle submenu.

▶ Press the ⌂ button to select the Wipe sens. function.
The selection marker is on the current setting.



▶ Press the + or − button to set the sensitivity of the rain/light sensor.

Convenience submenu

Key-dependent settings

The Key function allows you to define whether settings for the following submenus are stored with a key dependence:

- Inst. cluster (instrument cluster)
- Lighting
- Vehicle

Using the steering wheel buttons

▶ Press the ⊟ or ⊟ button repeatedly until the Settings menu appears in the display.

▶ Press the ⌂ button to switch to the submenu selection.

▶ Press the + or − button to select the Convenience submenu.

▶ Press the ⌂ button to select the Key function.
The selection marker is on the current setting.



▶ Press the + or − button to activate or deactivate key dependency.

ⓘ For safety reasons, it is not possible to set the Key function while the vehicle is in motion. You will see the following message in the display: Setting only possible at standstill.

Trip computer menu

General notes

You can call up or reset statistical data for the vehicle in the **Trip computer** menu.

Consumption statistics after start

Using the steering wheel buttons:

ⓘ When you call up the trip computer again, it displays the last function called up.

The units of the statistical information displayed are set permanently for each specific country, and are therefore independent of the units selected in the Settings menu.

▶ Press the ⊟ or ⊟ button repeatedly until the display shows the After start message.

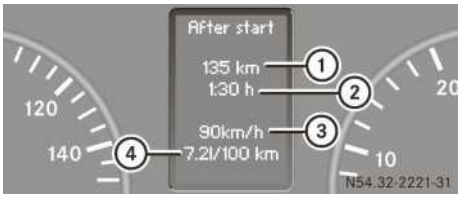

① Distance driven since start
② Time elapsed since start
③ Average speed since start
④ Average fuel consumption since start

ⓘ If you turn the key to position **0** in the ignition lock or remove it, all the values are reset after approximately 4 hours.

The values will not be reset if you turn the key back to position **1** or **2** during this time.

Consumption statistics after reset

Using the steering wheel buttons:

▶ Press the ⊟ or ⊟ button repeatedly until the display shows the After start message.

▶ Press the △ or ▽ button repeatedly until the After reset message appears.

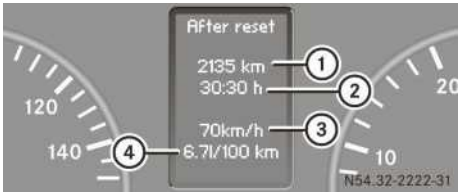

① Distance driven since last reset
② Time elapsed since last reset
③ Average speed since last reset
④ Average fuel consumption since last reset

Calling up the range

Using the steering wheel buttons:

▶ Press the ⊟ or ⊟ button repeatedly until the display shows the After start message.

▶ Press the △ or ▽ button repeatedly until the Range message appears.
The approximate distance which can be covered with the tank's current contents and your current style of driving is shown.



ⓘ If there is only a small amount of fuel left in the fuel tank, the ⛽ Please refuel message is shown instead of the range.

Resetting the consumption statistics

Using the steering wheel buttons:

▶ Press the ⊟ or ⊟ button repeatedly until the display shows the After start message.

▶ Press the △ or ▽ button to select the function you would like to reset.

▶ Press and hold the ⓪ reset button until the values are reset to "0".

ⓘ The After start consumption statistics are automatically reset after 999 hours or 9,999 kilometres.

The After reset consumption statistics are automatically reset after 9,999 hours or 99,999 kilometres.

Telephone menu

You can operate the mobile phone using the functions in the TEL menu, provided it is connected to the Mercedes-Benz hands-free system.

⚠ WARNING

Observe the legal requirements of the country in which you are currently driving regarding the use of mobile phones in the vehicle.

If it is permitted to use mobile phones while the vehicle is in motion, you should only use them when the road and traffic conditions allow. Otherwise, you may be distracted from the traffic conditions, cause an accident and injure yourself and others.

Switching the mobile phone on

Using the steering wheel buttons

- ▶ Switch on the mobile phone and the audio system or COMAND APS; see the separate operating instructions.
- ▶ Press the ☐ or ☐ button repeatedly until the TEL menu appears in the display. The information in the display depends on the status of the mobile phone:
  - **Mobile phone off**: the display shows the TEL off (Audio 20) or Switch on phone (Audio 50 or COMAND APS) message.
  - **PIN not entered**: the display shows the TEL PIN (Audio 20) or Please enter PIN: (Audio 50 or COMAND APS) message.
- ▶ Enter the PIN code using the mobile phone, audio system or COMAND APS.
  The mobile phone searches for a network. The display remains blank during this time.
  You will see the name of the network provider as soon as the mobile phone has found a network.
  Once the operational readiness symbol is shown, you can operate the mobile phone using the steering wheel buttons.



ⓘ If the operational readiness symbol goes out, your vehicle is outside the transmission/reception range.

Accepting a call

You can accept a call at any time, provided the mobile phone is ready to receive calls. You will see the following message in the display:



Display for Audio 20



Display for Audio 50 or COMAND APS

- ▶ Press ☐.
  The display shows the call duration.

Rejecting or ending a call

- ▶ Press ☐.
  The caller then hears the engaged tone.
  The display shows the operational readiness symbol again.

Dialling a number from the phone book

You may select and dial a number from the phone book at any time, provided the mobile phone is ready to receive calls.

ⓘ It is only possible to create new phone number entries in the phone book using the mobile phone itself. See the separate operating instructions.

- ▶ Press the button or button repeatedly until the TEL menu appears in the display. The display shows the GSM network provider.
- ▶ Press or to switch to the phone book.
  The on-board computer reads the phone book stored on the SIM card or in the mobile phone. This may take more than a minute. The display shows the Processing (Audio 20) or Please wait... (Audio 50 or COMAND APS) message.
  Reading is complete when the message disappears.
- ▶ Press or to select the desired name.
  The display shows the stored names in alphabetical order.



① Name from the phone book

ⓘ The display scrolls through the names rapidly if you press or for longer than one second. Releasing the button stops the rapid scroll.

If you do not wish to make a call, press the button.

- ▶ Press .
  The on-board computer dials the corresponding phone number. The display shows the Dialling (Audio 20) or Please wait... (Audio 50 or COMAND APS) message.
  The on-board computer stores the phone numbers in the redial memory.
  When a connection is made, the display shows the name of the other person and the call duration.



Redialling

The on-board computer stores the last phone numbers which were dialled. This means that you do not have to search through the entire phone book.

- ▶ Press the button or button repeatedly until the TEL menu appears in the display. The display shows the GSM network provider.
- ▶ Press .
  The display shows the most recently dialled numbers or names in the redial memory.



① Telephone number in the redial memory

- ▶ Press the or button repeatedly until the number or name you are looking for is displayed.
- ▶ Press .
  The on-board computer dials the corresponding phone number.
  If a connection is made, the display shows the call duration and name of the person you are calling if stored in the phone book. Otherwise, the number you are dialling continues to be displayed.

Power supply

Battery main switch

Important safety notes

You can use the battery main switch to disconnect the current to all your vehicle's consumers. This will prevent uncontrolled battery discharge caused by off-load current consumption.

⚠ WARNING

If the vehicle is equipped with an auxiliary battery in the engine compartment, it is necessary to disconnect both batteries when working on the vehicle electrical circuit. Only then is the electrical system fully disconnected from the power supply.

ⓘ Only disconnect the vehicle electrical system from the power supply using the battery main switch if the vehicle is to be parked up for a long period or when this is absolutely necessary. After switching on the power supply, you must reset the side windows (▷ page 68) and the electric sliding door (▷ page 62).

ⓘ A break in the power supply is entered in the DTCO (digital tachograph) as an event in the malfunction memory.

See the separate DTCO operating instructions.

! Make sure that the key is in position **0** in the ignition lock and wait at least 20 seconds before disconnecting or connecting the battery isolating switch. You could otherwise damage electrical system components.

Switching off the electrical system

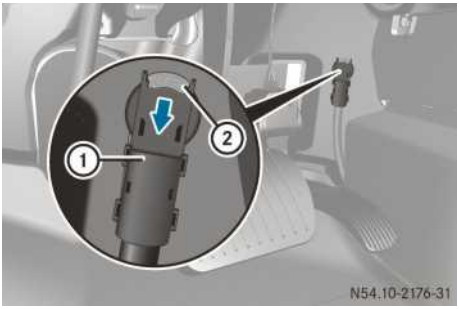

Battery main switch in the driver's footwell, on the right-hand side next to the accelerator pedal

- ▶ Remove the key from the ignition lock and wait for about 20 seconds.
- ▶ Press and hold button ② and unplug connector ① from the earth pin.
- ▶ Clamp connector ① under the accelerator pedal so that it cannot make contact with the earth pin.
  All starter battery consumers are disconnected from the power supply.

! When you clamp the connector under the accelerator pedal, make sure that the connector does not become damaged or dirty. It may otherwise not be possible to restore the electrical connection when the parts are reassembled.

Switching on the electrical system

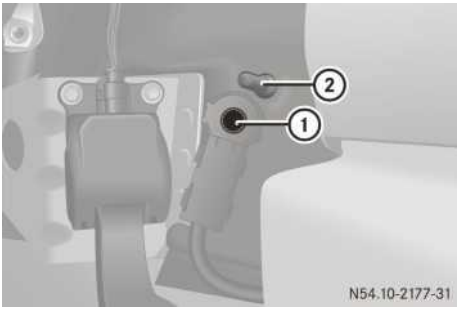

- ▶ Insert the key into the ignition lock.
- ▶ Press connector ① onto earth pin ② until you feel it engage and the lock inhibitor is released.
  Connector ① must be in full contact with earth pin ②.
  All consumers are reconnected to the DC power supply.

Lighting

General notes

For safety reasons, Mercedes-Benz recommends that you drive with the lights switched on even during the daytime. In some countries, operation of the headlamps varies due to legal requirements and self-imposed obligations.

ⓘ When driving in countries in which traffic drives on the opposite side of the road to the country where the vehicle is registered, the oncoming traffic may be dazzled. On vehicles with halogen headlamps, you must have the headlamps partially masked. On vehicles with bi-xenon headlamps, you must have the headlamps switched over beforehand.
You will find further information in the Operation section (▷ page 172).

Light switch

Location



Light switch between driver's door and steering wheel

① Light switch

The symbols on the light switch have the following meanings:

- Left-hand parking lamp on
- Right-hand parking lamp on
- AUTO Automatic headlamp mode
- 0 Lights off/constant headlamp mode
- Side lamps, licence plate illumination and instrument lighting on
- Dipped-beam/main-beam headlamps (depending on the position of the combination switch)

Dipped-beam headlamps

- ▶ Turn the key to position **1** in the ignition lock.
- ▶ Turn the light switch to .
  The indicator lamp in the instrument panel lights up.

Constant headlamp mode

You can adjust constant headlamp mode in the on-board computer:

- vehicles with steering wheel buttons (▷ page 92)
- vehicles without steering wheel buttons (▷ page 82)

This is not possible in countries where constant headlamp mode is a legal requirement.

▶ Turn the light switch to 0.
The dipped-beam headlamps, side lamps and licence plate lighting are switched on whenever the engine is running.
The indicator lamp in the instrument panel lights up.

ⓘ If you turn the light switch to or , the corresponding light is switched on. If the light switch is turned to AUTO, constant headlamp mode remains switched on.

Automatic headlamp mode

Side lamps, dipped-beam headlamps and licence plate illumination are switched on automatically depending on ambient light conditions.

⚠ **WARNING**

If the light switch is set to AUTO, the dipped-beam headlamps will not come on automatically if it is foggy. This could endanger you and others. Therefore, turn the light switch to in fog.

The automatic headlamp feature is only an aid. The driver is responsible for the vehicle's lighting at all times.

▶ Turn the light switch to AUTO.
The side lamps are switched on/off automatically when the key is in position **1** in the ignition lock.
The side lamps, dipped-beam headlamps and licence plate lighting are switched on/off in accordance with the ambient light conditions and only when the engine is running.

Front foglamps/rear foglamp

▶ Turn light switch ① to or .

ⓘ If your vehicle is only equipped with rear foglamps, you must turn the light switch to .

▶ **Front foglamps:** pull light switch ① out to the first stop.
The green indicator lamp next to the light switch lights up.

▶ **Rear foglamp:** pull light switch ① out to the second stop.
The yellow indicator lamp next to the light switch lights up.

Headlamp range adjustment

The headlamp range control allows you to adjust the cone of light from the headlamps to suit the vehicle load. The cone of light from the headlamps changes if seats are occupied or if the load compartment is being loaded or unloaded. This could impair visibility and dazzle oncoming traffic.

You can only adjust the headlamp range while the engine is running.



▶ **To adjust the headlamp range:** turn headlamp range control ① to the corresponding position. The road ahead should be lit up for 40 m to 100 m and the dipped-beam headlamps should not dazzle oncoming traffic.
Select position 0 if the vehicle is unladen.

On vehicles with bi-xenon headlamps and vehicles with electronic level control, the headlamp range is controlled automatically.

Combination switch

Main-beam headlamps and headlamp flasher

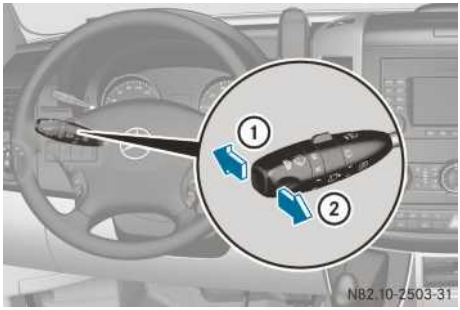

① Main-beam headlamps

② Headlamp flasher

▶ **To switch on the main-beam headlamps:** switch on dipped-beam headlamps (▷ page 99).

▶ Press combination switch ① forwards.
The indicator lamp in the instrument cluster lights up.

▶ **To operate the headlamp flasher:** turn the key to position **1** or **2** in the ignition lock.

▶ Pull the combination switch briefly in direction ②.

Turn signals

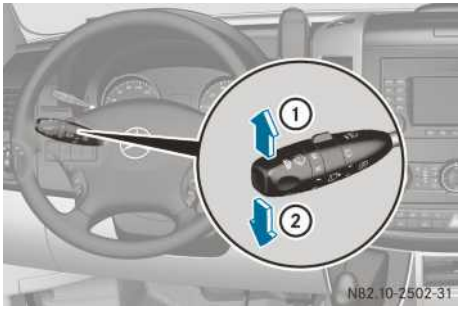

① To indicate a right turn

② To indicate a left turn

▶ **To indicate:** press the combination switch in desired direction ① or ②, until it engages.
The combination switch automatically returns to its original position after large steering movements.

▶ **To indicate briefly:** press the combination switch briefly in desired direction ① or ②.
The corresponding turn signal flashes three times.

Cornering light function (vehicles with bi-xenon headlamps)

When the dipped-beam headlamps are switched on, the cornering light function improves the illumination of the road in the direction you are turning.

The cornering light function switches on automatically, if:

- you are travelling at a speed of less than 40 km/h and you switch on the indicator lamp or turn the steering wheel.
- you are travelling at a speed of between 40 km/h and 70 km/h and you turn the steering wheel.

The cornering light may continue to be lit for a short time, but is deactivated automatically after a maximum of three minutes.

Hazard warning lamps

The hazard warning lamps work even when the ignition is switched off.

The hazard warning lamps switch on automatically if:

- an airbag is deployed.
- you brake sharply and bring the vehicle to a halt from a speed of more than 70 km/h.



▶ **To switch on/off:** press button ①.

ⓘ If you have indicated a turn while the hazard warning lamps are switched on, only the turn signal lamps on the side of the vehicle selected will light up.

If the hazard warning lamps have been switched on automatically, press the hazard warning lamp switch to switch them off.

⚠ **WARNING**

If you open the rear doors 90° (detent position) or fold down the platform tailgate on vehicles with a platform, the rear lights are covered.

The vehicle will then be unsafe as its rear lights will not be visible for approaching traffic. Other road users may not realise until too late that it is an obstruction. This could lead to an accident.

You should ensure that the vehicle is visible from the rear in accordance with the relevant national regulations, by using the warning triangle for instance.

Front interior lighting

Automatic control

The interior lighting comes on if you:

- unlock the vehicle
- open a door
- remove the key from the ignition lock

The interior lighting switches off automatically. If a door is left open, the interior lighting switches off after approximately 20 minutes.

Standard front interior lighting



① To switch on the interior lighting
② Automatic control
③ To switch off the interior lighting

Front interior lighting with overhead control panel

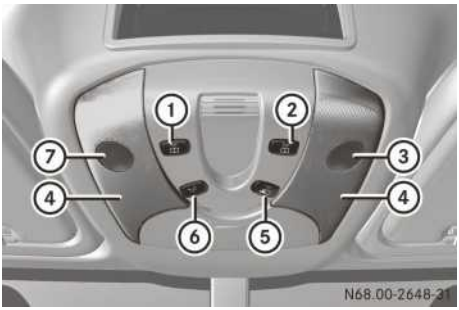

① To switch the left-hand reading lamp on/off
② To switch the right-hand reading lamp on/off
③ Right-hand reading lamp

④ Interior lamp
⑤ To switch automatic control on/off
⑥ To switch the interior lighting on/off
⑦ Left-hand reading lamp

If you switch on interior lights or the reading lamps manually, they switch off automatically after about twenty minutes.

Rear interior lighting

Switching the standard interior lighting on/off

In panel vans/crewbuses equipped with standard interior lighting, the switch for the interior lighting is located on the rear lights in the load compartment/vehicle interior.



Interior light with switch
① To switch on the interior lighting
② To switch off the interior lighting
③ Automatic control

If the switches on the interior lights are set to automatic control, the interior lights are switched on as soon as you open a door or unlock the vehicle.

The interior lights switch off automatically after twenty minutes.

The interior lights switch on again if you:

- open a door
- switch on the ignition again

Switching convenience interior lighting on/off

In crewbuses equipped with convenience interior lighting, you can switch the rear interior lighting on and off from the driver's workstation.

In addition, there is also a switch on each interior light, which can be used to switch the lights on/off separately.



Switch for the rear interior lighting
① To switch on the interior lighting
② Automatic control
③ To switch off the interior lighting

▶ **To activate:** press upper section ① on the switch.
The interior lights are switched on if the switches on the interior lights (▷ page 103) are in the on position.

▶ **To deactivate:** press lower section ③ of the switch.
The interior lights are all switched off, regardless of the position of the switch on the interior light.

▶ **To switch on automatic control:** move the central control switch for the rear interior lighting to position ②.
If the switches on the interior lights (▷ page 103) are set to automatic control, the interior lights are switched on as soon as you open a door or unlock the vehicle.

The interior lights switch off automatically after twenty minutes.

The interior lights switch on again if you:

- open a door
- switch on the ignition again

Load compartment motion detector

The interior lighting is also switched on by the motion detector in the load compartment on panel vans equipped with this feature.

⚠ WARNING

Motion detectors use the invisible infrared radiation emitted by LEDs (light emitting diodes).

Do not view invisible infrared radiation, laser class 1M, directly using optical instruments, such as spectacles.

Your eyes could be injured.

If the motion detector detects a movement in the load compartment when the vehicle is stationary, the interior lighting switches on for approximately two minutes.

The interior lighting can be switched on by the motion detector within four seconds if:

- the interior light switch (▷ page 103) is set to "Automatic control"
- the vehicle is stationary, the parking brake is applied and the brake pedal is not being depressed

  or
- the selector lever is in position **P** on vehicles with automatic transmission and the brake pedal is not being depressed
- the vehicle has not been locked from the outside using the key

The motion detector switches off automatically if no change is detected in the vehicle for several hours, e.g. if a door is opened, if the ignition key is turned, etc. This prevents the battery from becoming discharged.

Good visibility

Windscreen wipers

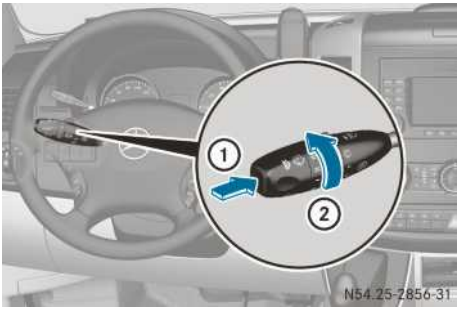

① Single wipe/to wipe with washer fluid (▷ page 105)

② To switch on the windscreen wipers

▶ **To switch on:** turn the key to position **1** or **2** in the ignition lock.

! Vehicles with rain/light sensor:

In dry weather conditions, switch the windscreen wipers off. Otherwise, dirt or optical effects may cause undesired windscreen wiper sweeps. This could then damage the windscreen wiper blades or scratch the windscreen.

▶ Turn the combination switch in the direction of arrow ② to the appropriate setting depending on the intensity of the rain.

The detent positions of the combination switch correspond to the following wiper speeds:

0 Windscreen wipers off
I Intermittent wipe
II Normal wipe
III Rapid wipe

i If the windscreen wipers are switched on and you stop the vehicle, the windscreen wiper speed is reduced. For example, if you have selected level **II** and stop the vehicle, wiping continues with intermittent wipe while the vehicle is stationary. If intermittent wipe is selected, the intervals become longer.

Vehicles with a rain/light sensor: you can use level **I** as the universal setting. The rain/light sensor sets the appropriate wiping frequency automatically, according to the intensity of the rain. When you stop the vehicle, levels **III** and **II** are switched down to level **I** automatically.

The windscreen wipers will return to the original level when you drive faster than 8 km/h again.

Setting the sensitivity of the rain/light sensor (▷ page 94).

Rear window wiper

The rear window wiper switches on automatically if you engage reverse gear and the windscreen wipers are on.

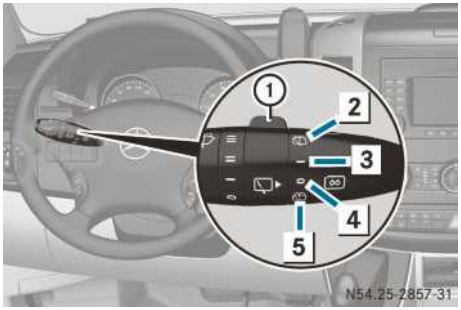

① Switch
2 To wipe with washer fluid
3 Intermittent wipe
4 To switch off the wiper
5 To wipe with washer fluid

▶ **To switch on:** turn the key to position **1** or **2** in the ignition lock.
▶ Turn switch ① to the corresponding position

ⓘ Use washer fluid to wipe the rear window even when it is raining. This prevents the rear window from smearing.

Windscreen washer system

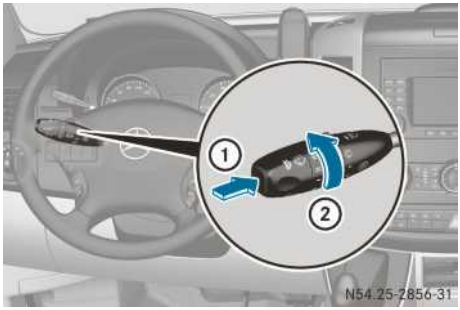

① To wipe with washer fluid
② To switch on the windscreen wipers

▶ **To switch on:** press the combination switch beyond the pressure point in the direction of arrow ①.
The windscreen wipers wipe with washer fluid.

ⓘ Use washer fluid to wipe the rear window even when it is raining. By doing so, you will prevent smears on the windscreen.

Headlamp cleaning system

▶ **To switch on:** switch on the dipped-beam headlamps.
▶ Switch on the windscreen washer system. The headlamps are cleaned with a high-pressure water jet.

Window heating

Important safety notes

⚠ **WARNING**
Clear all windows of ice or snow before setting off. Impaired visibility could otherwise endanger yourself and others.

Windscreen heating

The windscreen heating is operational when the engine is running.

The windscreen heating consumes a lot of power. You should therefore switch off the heating as soon as the windscreen is clear. The heating switches off automatically after five minutes.



Switch for the windscreen heating

- ▶ Start the engine.
- ▶ **To switch on/off:** press switch ①.
  The indicator lamp in the switch comes on when the windscreen heating is switched on.

Rear window heating

The rear window heating consumes a lot of power. Switch the rear window heating off when the rear window is clear. The rear window heating switches off automatically after approximately twelve minutes.



Switch for the rear window heating

- ▶ Start the engine.
- ▶ **To switch on/off:** press switch ①.
  The indicator lamp in the switch comes on when the rear window heating is switched on.

Climate control

Overview of climate control systems

The vehicle is equipped with one of the following climate control systems:

Heating



Control panel, left-hand-drive vehicles



Control panel, right-hand-drive vehicles

The heating system is a heating and ventilation system, without a cooling function (▷ page 109).

Air-conditioning system



Control panel, left-hand-drive vehicles



Control panel, right-hand-drive vehicles

The air-conditioning system is a combination of a heating and ventilation system, together with a cooling system (▷ page 109).

Rear-compartment heating



The separately activated rear-compartment heating allows a separate temperature and airflow setting for the rear compartment (▷ page 110).

Rear-compartment air-conditioning system



The separately activated rear-compartment air-conditioning system allows a separate temperature and airflow setting for the rear compartment (▷ page 110).

Control panel, left-hand-drive vehicles



Control panel, right-hand-drive vehicles

On vehicles without rear-compartment climate control in the centre console, the control panel is equipped with a paper holder (▷ page 164).

General notes

The air-conditioning system regulates the temperature and humidity of the vehicle interior and filters undesired particles out of the air.

The heating/air-conditioning system can only be operated when the engine is running. The heating/air-conditioning system functions best only when the side windows are closed.

The installed filter removes most dust particles, pollen and unpleasant odours drawn in from the outside air. A clogged filter reduces the airflow into the vehicle interior. The interval for replacing the filter depends on environmental influences. The interval may be shorter than that indicated in the Maintenance Booklet.

ⓘ Ventilate the vehicle for a brief period during warm weather. On vehicles with an air-conditioning system, in order to cool the vehicle rapidly, switch on air-recirculation mode briefly. In this way, you will accelerate the cooling process and achieve the desired temperature faster.

⚠ WARNING

Observe the settings recommended on the following pages. The windows could otherwise mist up. This may prevent you from observing the traffic conditions, thereby causing an accident.

Overview of climate control system functions

Heating

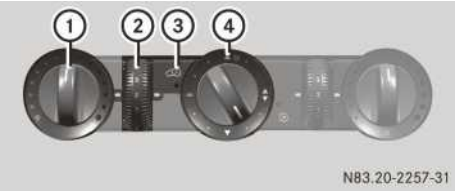

Control panel, left-hand-drive vehicles



Control panel, right-hand-drive vehicles

	Operation
①	Sets the temperature (▷ page 111)
	Demists the windscreen
②	Sets the airflow (▷ page 113)
	Demists the windscreen
③	Switches air-recirculation mode on/off (▷ page 114)
④	Sets the air distribution (▷ page 113)
	▲ Demists the windscreen

Recommendations for optimum climate control:

- set the temperature control to the middle level. Only change the temperature in small increments.
- only use the demisting function until the windscreen is clear again (▷ page 113).
- only use air-recirculation mode briefly, e.g. in a tunnel. When the flow of fresh air is cut off and the air inside the vehicle is recirculated, the windows could mist up.

Air-conditioning system

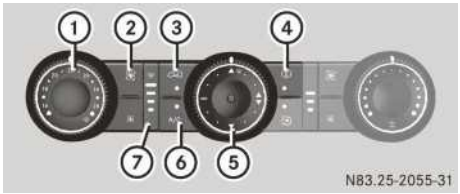

Control panel, left-hand-drive vehicles

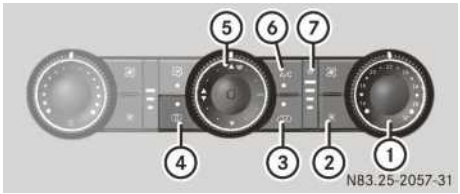

Control panel, right-hand-drive vehicles

	Operation
①	Sets the temperature (▷ page 111)
	Demists the windscreen
②	Sets the airflow (▷ page 113) Increases the airflow Decreases the airflow
③	Switches air-recirculation mode on/off (▷ page 114)
④	Switches the reheat function (window air dehumidification) on/off (▷ page 114)
⑤	Sets the air distribution (▷ page 113)
	▲ Demists the windscreen
⑥	A/C Switches cooling with air dehumidification on/off (▷ page 111)
⑦	Blower setting bar display
	Demists the windscreen

Recommendations for optimum climate control:

- set the temperature to 22 °C. Only change the temperature in small increments.
- switch on cooling with air dehumidification. The indicator lamp in the switch comes on.
- only use the demisting function until the windscreen is clear again (▷ page 113).
- only use the reheat function until the windows are clear again.
- only use air-recirculation mode briefly, e.g. in a tunnel. When the flow of fresh air is cut off and the air inside the vehicle is recirculated, the windows could mist up.

Rear-compartment heating

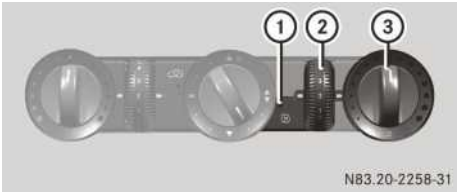

	Operation
①	Switches air-recirculation mode on/off (▷ page 110)
②	Sets the airflow (▷ page 113)
③	Sets the temperature (▷ page 111)

For optimum climate control, set the temperature control to the middle level. Only change the temperature in small increments.

Rear-compartment air-conditioning system

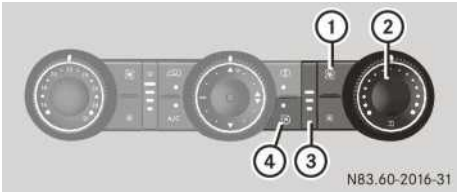

Control panel, left-hand-drive vehicles

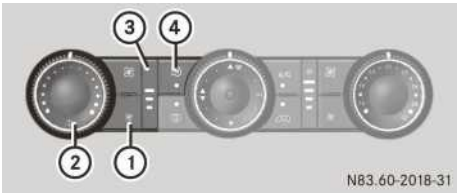

Control panel, right-hand-drive vehicles

	Operation
①	Sets the airflow (▷ page 113) Increases the airflow Decreases the airflow
②	Sets the temperature (▷ page 111)
③	Blower setting bar display
④	Activates/deactivates the rear-compartment air-conditioning system (▷ page 110)

For optimum climate control, set the temperature control to the middle level. Only change the temperature in small increments.

Switching the climate control on/off

General notes

When the climate control is switched off, air intake and air circulation are also deactivated. Only use this setting for a brief period. Otherwise, the windows could mist up.

Air-conditioning system

- **To activate:** press the button and set the blower speed to at least the first level. The blower speeds are shown in bars next to the button.
- **To switch off:** press the button and, after reaching the lowest blower speed, press it again.

Rear-compartment heating/rear-compartment air-conditioning system

▶ Press the [button] button.
If the indicator lamp in the button lights up, the rear-compartment heating/rear-compartment air-conditioning system is switched on.

Switching the cooling with air dehumidification function on/off

To cool the air inside the vehicle, if equipped with an air-conditioning system, cooling with air dehumidification must be switched on. The air inside the vehicle is then cooled and dehumidified to the temperature level set. This prevents the windows from misting up.

Condensation may appear on the underside of the vehicle when in cooling mode.

⚠ WARNING

If the "cooling with air dehumidification" function is deactivated, the air inside the vehicle will not be cooled (during warm weather) or dehumidified. The windows could mist up more quickly. This may prevent you from observing the traffic conditions, thereby causing an accident.

▶ Press the [A/C] button.
If the indicator lamp in the button lights up, cooling with air dehumidification is switched on.

Setting the temperature

Heating/air-conditioning system

▶ Turn temperature control ① for the heating (▷ page 109) or the air-conditioning system (▷ page 109) clockwise to increase the temperature, or anti-clockwise to reduce it. Start at the centre position, or at 22 °C. Only change the temperature in small increments.

Rear-compartment heating/rear-compartment air-conditioning system

▶ Make sure that the rear-compartment climate control (rear-compartment heating/air-conditioning system) is switched on (▷ page 110).

▶ Turn rear-compartment temperature control ③(▷ page 110) or rear-compartment air-conditioning system ②(▷ page 110) clockwise to increase the temperature, or anti-clockwise to reduce it. Only change the temperature in small increments.

ⓘ Your vehicle may be equipped with rear-compartment heating and a rear-compartment air-conditioning system.

If you set the temperature control to the centre position, only one of the two climate control systems is activated in the rear compartment and set to air-recirculation mode (▷ page 114).

Setting the air vents

General notes

⚠ WARNING

Air flowing out of the air vents may be very hot or very cold. Therefore, there is a risk of frostbite or burns to exposed skin in the immediate proximity of these air vents. Keep exposed parts of the body away from these air vents. If necessary, direct the airflow to a different area of the vehicle interior.

You can set the centre and side air vents.

On vehicles with a rear-compartment air-conditioning system, you can also adjust the air vents located in the roof duct.

The entire vehicle interior is ventilated via the air vents.

Observe the following instructions so air can flow freely through the air vents:

- keep the air inlet on the bonnet free from ice and snow.
- never cover the vents or the ventilation grilles in the vehicle interior.
- for virtually draught-free ventilation, move the sliders on the centre air vents to the central position.

Centre air vents

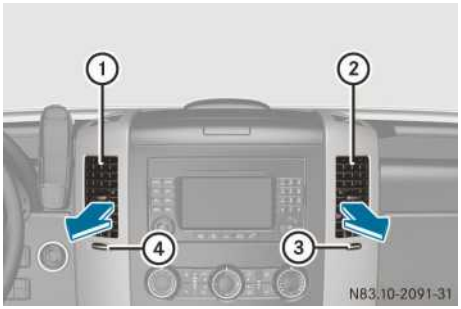

① Centre air vent, left
② Centre air vent, right
③ Thumbwheel for centre air vent, right
④ Thumbwheel for centre air vent, left

▶ Turn thumbwheel ③ or ④ to the right to open and to the left to close the centre air vent.

Side air vents

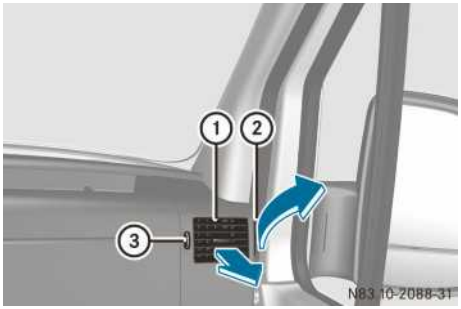

Side air vent (example: right-hand side of the vehicle)

▶ Turn thumbwheel ③ up to open and down to close side air vent ①.

If the [symbol] symbol can be seen on thumbwheel ③, demister vent ② is open.

Air vents

You can use the air vents to ventilate the vehicle interior on the left and right, the rear compartment and the headroom.

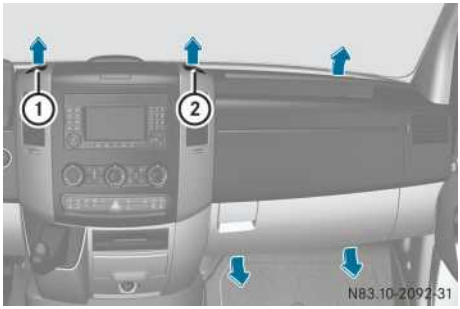

Air vents (example, right-hand side of the vehicle)

① Air vent thumbwheel, left-hand side of the vehicle
② Air vent thumbwheel, right-hand side of the vehicle

▶ Turn thumbwheel ① or ② to the right to open and to the left to close the air vents.

Air vents in the roof duct

On vehicles with rear-compartment/passenger compartment air conditioning, adjustable air vents are integrated into the roof duct.



- ▶ Set the airflow by opening/closing the air flaps.
- ▶ Set the air distribution by turning air vents ①.

! Always leave at least one air vent open.

If the rear-compartment air conditioning is switched on and all the air vents are closed, the air-conditioning system may be damaged.

Setting the air distribution

Heating/air-conditioning system

The air distribution symbols for the heating/air-conditioning system have the following meanings:

	Directs air through the centre and side air vents.
	Directs air to the windscreen and the air vents.
	Directs air to the windscreen, the air vents and into the footwell.
	Directs air to the air vents and into the footwell.

- ▶ Set air-distribution control ④ for the heating (▷ page 109) or air-conditioning system ⑤(▷ page 109) to the corresponding symbol.

Setting the airflow

Heating/rear-compartment heating

- ▶ On vehicles with rear-compartment heating, make sure that the rear-compartment climate control is activated (▷ page 110).
- ▶ Set airflow control ② for the heating (▷ page 109) or rear-compartment heating (▷ page 110) to the desired level.

Air conditioning/rear-compartment air conditioning

- ▶ On vehicles with rear-compartment heating, make sure that the rear-compartment climate control is activated (▷ page 110).
- ▶ Press the button to reduce the airflow or the button to increase the airflow. The blower speeds are shown in bars next to the buttons.

Defrosting the windows

General notes

⚠ **WARNING**

Clear all windows of ice or snow before setting off. Otherwise, impaired visibility could endanger you and others.

Only use the following settings until the windows are clear again.

- ▶ **Vehicles with window heating:** switch on the front and/or rear window heating (▷ page 105).

Heating

- ▶ Set temperature control ① and airflow control ② to (▷ page 109).
- ▶ Set air-distribution control ④ to (▷ page 109).
- ▶ Close the centre air vents and the air outlets for the headroom and the rear compartment (▷ page 111).
- ▶ Direct the side air vents towards the side windows and open the demister vents for the side windows (▷ page 111).

Air-conditioning system

- ▶ Set temperature control ① to [icon] (▷ page 109).
- ▶ Press the [icon] button until the maximum blower output is reached.
  All bars in the display next to the button light up.
- ▶ Set air-distribution control ⑤ to [icon] [icon] (▷ page 109).
- ▶ Close the centre air vents and the air outlets for the headroom and the rear compartment (▷ page 111).
- ▶ Direct the side air vents towards the side windows and open the demister vents for the side windows (▷ page 111).

Demisting the windows

Windows misted up on the inside

General notes

Only use the following settings until the windows are clear again.

- ▶ **Vehicles with window heating:** switch on the front and/or rear window heating (▷ page 105).
- ▶ Switch off air-recirculation mode (▷ page 114).

Heating

- ▶ Set temperature control ① to a higher temperature (▷ page 109).
- ▶ Set airflow control ② to a higher blower setting. It should be set at least to level two (▷ page 109).
- ▶ Set air-distribution control ④ to [icon] [icon] (▷ page 109).

If the windows still mist up, set the control as described for demisting (▷ page 113).

Air-conditioning system

- ▶ Activate cooling with air dehumidification (▷ page 111).
- ▶ Press the [icon] button (▷ page 109).
  The reheat function is switched on. The indicator lamp in the button lights up.
  To switch off the reheat function, press the [icon] button again. The indicator lamp in the button goes out.

Windows misted up on the outside

Only use the following settings until the windscreen is clear again.

- ▶ Switch on the windscreen wipers (▷ page 104).
- ▶ Adjust air distribution to the footwell (▷ page 113).
- ▶ Close the air vents (▷ page 111).

Switching air-recirculation mode on/off

General notes

You can deactivate the intake of fresh air if unpleasant odours enter the vehicle from outside. Only the air inside the vehicle will then be circulated.

⚠ WARNING

Only switch over to air-recirculation mode briefly at low outside temperatures. Otherwise, the windows could mist up, thus impairing visibility and endangering yourself and others. This may prevent you from observing the traffic conditions, thereby causing an accident.

Heating/air-conditioning system

- ▶ Press the [icon] button.
  If the indicator lamp in the button lights up, air-recirculation mode is activated.

Air-recirculation mode switches off automatically after about 10 to 30 minutes, depending on the outside temperature.

Rear-compartment heating/rear-compartment air-conditioning system

On vehicles with rear-compartment heating and a rear-compartment air-conditioning system, you can activate/deactivate air-recirculation mode for the rear-compartment climate control.

- **To activate:** set the temperature control of rear-compartment heating ③ (▷ page 110) or rear-compartment air-conditioning system ② (▷ page 110) to the centre position.
  Only one of the two climate control systems in the rear compartment is activated and is in air-recirculation mode.
- **To deactivate:** turn the temperature control of rear-compartment heating ③(▷ page 110) or rear-compartment air-conditioning system ② (▷ page 110) clockwise or anti-clockwise. Only change the temperature in small increments.

Auxiliary heating

Important safety notes

⚠ WARNING

Exhaust fumes are produced while the auxiliary heating system is in operation. If you breathe in these exhaust fumes, you could be poisoned. Therefore, always switch off the auxiliary heating in enclosed spaces without an extraction system, e.g. a garage.

⚠ WARNING

Parts of the vehicle can become very hot during operation of the auxiliary heating. Make sure that the exhaust system does not under any circumstances come into contact with highly flammable material such as dry grass or fuels. Otherwise, the highly flammable material could ignite and set the vehicle alight.

Auxiliary heating operation is prohibited at filling stations or when your vehicle is being refuelled. Therefore, the auxiliary heating must be switched off at filling stations.

⚠ WARNING

When transporting hazardous goods, always observe the relevant safety regulations.

Spray canisters and gas cartridges or other pressurised containers carried in the vehicle may be highly flammable and could explode if heated.

In particular, make sure that the containers described above are not placed in the hot air flow from the auxiliary heating system. Do not stow such containers directly next to or on top of the heater.

You could otherwise endanger yourself and others.

The auxiliary heating system operates independently of the engine and complements the vehicle heating or air-conditioning system.

Your vehicle is equipped with either an auxiliary hot-water heater or an auxiliary warm-air heater.

The hot-water auxiliary heater can be operated and set via the on-board computer and the auxiliary heating switch or using the remote control.

The auxiliary warm-air heater can be operated and set using the timer above the overhead control panel (▷ page 120).

You can use the auxiliary heating to:

- preheat the vehicle interior
- provide the coolant with additional heating, thereby protecting the engine and saving fuel[9]
- support the vehicle's heating system while the engine is running and outside temperatures are low (heater booster function)

9 Hot-water auxiliary heater only.

! Switch on the auxiliary heating system at regular intervals (at least once a month) for approximately 10 minutes.

Make sure that the flow of hot air is not blocked. Otherwise, the auxiliary heating will overheat and switch off.

i If the interior motion sensor (▷ page 71) is primed and the auxiliary heating is switched on, it is possible that the interior temperature monitoring may cause a false alarm. In this case, either deactivate the interior motion sensor or switch off the auxiliary heating.

Before switching on

This is only for vehicles with a hot-water auxiliary heater.

- ▶ The fuel tank must be at least a quarter full.
- ▶ Set the desired temperature using the temperature control of the heating or the air-conditioning system (▷ page 111).
- ▶ Set the air distribution as required (▷ page 113).
- ▶ Open the centre and side air vents and set them to the middle position (▷ page 111).

i The auxiliary heating automatically switches to heater booster mode after the engine is started.

Operation using the switch

This is only for vehicles with a hot-water auxiliary heater.

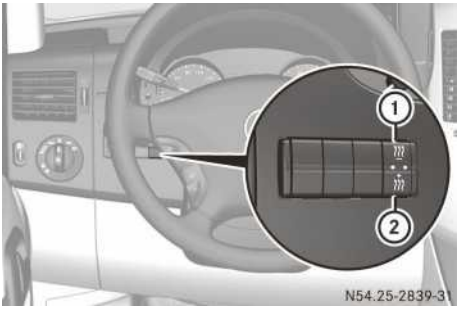

① To switch the auxiliary heating on/off

② To switch the heater booster function on/off (▷ page 123)

▶ **To switch on the auxiliary heating:** press the switch for longer thantwo seconds.

- The auxiliary heating heats or ventilates the interior to the temperature that you have set.
- The blower switches to the lowest level.
- The red indicator lamp in the switch comes on.

▶ **To switch off the auxiliary heating:** press the switch.

or

▶ Turn the key to position **0** in the ignition lock.
The red indicator lamp in the switch goes out.

The auxiliary heating operates for about another two minutes and then switches off automatically.

Selecting a switch-on time

This is only for vehicles with a hot-water auxiliary heater.

You can use the on-board computer to define up to three switch-on times, one of which can be selected.

On-board computer without steering wheel buttons

- ▶ Turn the key to position **2** in the ignition lock.
- ▶ Press the switch.
  The symbol in the display flashes.

or

- ▶ Press the Ⓜ menu button on the instrument cluster repeatedly until the symbol flashes in the display.
- ▶ Use the ⊕ or ⊖ buttons on the instrument cluster to select switch-on time 1 to 3.
  The switch-on time selected is displayed.
- ▶ Wait 10 seconds for the standard display to appear.
  The switch-on time is selected. The yellow indicator lamp in the switch comes on.

If you do not preselect a switch-on time, and `--:--` is shown in the display, this means that the automatic switch-on mode is switched off. The yellow indicator lamp in the switch goes out.

ⓘ If you turn the key to position **0** in the ignition lock, the yellow indicator lamp in the switch goes out after 30 minutes.
The red indicator lamp in the switch comes on when the auxiliary heating switches on.

On-board computer with steering wheel buttons

- ▶ Turn the key to position **2** in the ignition lock.
- ▶ Press the switch.
  The `Aux. heating` submenu is shown in the display.
  If no switch-on time has been preselected, the selection marker highlights the preselected switch-on time, or `Timer off`.



ⓘ You can also access the `Aux. heating` submenu via the `Settings` (▷ page 88) menu.

- ▶ Use the + or − buttons on the steering wheel to select the desired switch-on time.
  Use the `Timer off` setting to deactivate automatic switch-on.
- ▶ Press the button on the steering wheel.
  The switch-on time is selected. The yellow indicator lamp in the switch comes on.

ⓘ If you turn the key to position **0** in the ignition lock, the yellow indicator lamp in the switch goes out after 30 minutes.
The red indicator lamp in the switch lights up when the auxiliary heating switches on.

Setting the switch-on time

This is only for vehicles with a hot-water auxiliary heater.

On-board computer without steering wheel buttons

- ▶ Use the same method to select a switch-on time as described in the "Preselecting a switch-on time" section.
- ▶ Press the ⓪ reset button on the instrument cluster.
  The hour display flashes.
- ▶ Use the ⊕ and ⊖ buttons on the instrument cluster to set the hours.

- ▶ Press the ⓪ reset button.
  The minute display flashes.
- ▶ Use the ⊕ and ⊖ buttons to set the minutes.

On-board computer with steering wheel buttons

- ▶ Use the same method to select a switch-on time as described in the "Preselecting a switch-on time" section.
- ▶ Press the ⌂ button on the steering wheel.
  The Hours menu is shown in the display.
- ▶ Press the + or − button on the steering wheel to set the hours.
- ▶ Press the ⌂ button.
  The Minutes menu is shown in the display.
- ▶ Press the + or − button to set the minutes.
- ▶ Press the ⌂ button.
  The switch-on time is set and selected.

Operation using the remote control

This is only for vehicles with a hot-water auxiliary heater.

You can switch the auxiliary heating on/off and set the operating duration using the remote control.

The remote control has a maximum range of approximately 600 metres.

You can use up to four remote control units on the vehicle. These must be synchronised for the receiver in your vehicle (▷ page 119).

The range is reduced by:

- sources of interference
- solid objects between the remote control and the vehicle
- transmitting from an enclosed space
- the remote control being in an unfavourable position in relation to the vehicle



① Indicator lamp
② To confirm settings
③ To switch the remote control on/off, set the operating duration or end or cancel settings

indicator lamp ① lights up in various ways to show different operating modes:

Signalling	Meaning
Lights up red	Remote control switched on
	Data transfer
Flashes red	Auxiliary heating switched off
Lights up green	Auxiliary heating switched on
Flashes green	Change operating duration active
Flashes alternately red and green	Remote control in synchronising mode

You can find further information on the lamp status in the "Practical advice" section (▷ page 249).

Switching the remote control on/off

The remote control switches to standby mode after 10 seconds. The indicator lamp goes out.

▶ **To switch on:** press and hold the ⏻ button until the indicator lamp lights up red.

If there is a connection between the remote control and the receiver in the vehicle:

- the indicator lamp flashes red. The auxiliary heating is deactivated.

  or

- the indicator lamp lights up green. The auxiliary heating is activated.

▶ **To switch off:** press and hold the ⏻ button until the indicator lamp goes out.

Switching the auxiliary heating on/off

The remote control must be switched on (▷ page 118).

▶ **To switch on:** when the indicator lamp flashes red, press OK.

The indicator lamp lights up red during data transfer.

When the indicator lamp lights up green, the auxiliary heating is activated.

▶ **To switch off:** when the indicator lamp lights up green, press OK.

The indicator lamp lights up red during data transfer.

When the indicator lamp flashes red, the auxiliary heating is deactivated.

Changing the operating duration

The remote control must be switched on (▷ page 118).

▶ When the indicator lamp flashes red, press ⏻ and OK simultaneously.

The indicator lamp flashes green.

▶ Press the ⏻ button repeatedly until the desired operating duration is shown.

- 20 minutes

  The indicator lamp flashes green twice.

- 30 minutes

  The indicator lamp flashes green three times.

- 40 minutes

  The indicator lamp flashes green four times.

- 60 minutes

  The indicator lamp flashes green six times.

▶ Press the OK button.

The indicator lamp lights up red during data transfer.

If the indicator lamp emits two long, green flashes, the selected operating duration is stored.

ⓘ If no adjustment is made, the indicator lamp flashes six times and the remote control goes into standby mode.

Synchronising the remote control

▶ Press the ≋ auxiliary heating switch (▷ page 116) for longer than 10 seconds. The red indicator lamp in the ≋ switch remains lit until the switch is released.

If the red indicator lamp in the ≋ switch flashes, the receiver in the vehicle is ready for synchronising.

▶ Press and hold the ⏻ button on the remote control until the indicator lamp on the remote control lights up red.

If there is an active connection between the remote control and the receiver, the indicator lamp on the remote control flashes alternately red and green. The remote control is in synchronising mode.

ⓘ If you press the ⏻ button again on the remote control after starting synchronisation, you will only synchronise this remote control unit with the receiver. Any other remote control units that were synchronised will be cleared. The indicator lamp flashes alternately red and green (very slowly).

▶ Press the OK button on the remote control.

The remote control indicator lamp lights up red during data transfer.

When the remote control indicator lamp emits two long green flashes, the selected operating time is synchronised. The indicator lamp in the auxiliary heating switch goes out.

Operation using the timer

This is only for vehicles with a hot-water auxiliary heater.

⚠ WARNING

The auxiliary heating must not be operated if there are highly flammable substances nearby or in enclosed spaces without an extraction system. Make sure that the auxiliary heating is not switched on automatically by the timer in such places. If this possibility exists, deactivate the respective programmed time.

Use the timer to:

- activate/deactivate immediate heating mode
- set up to three switch-on times
- set the operating duration to between 10 and 120 minutes or activate continuous operation
- set the heating level (preselected temperature) to a range between 10 and 30

Overview

The auxiliary heating timer is located above the overhead control panel (▷ page 24).



	Operation
①	Program column 123 Sets preselection memory 1 – 3 (▷ page 116) Mon – Sun Sets the day (▷ page 121)
②	Menu bar Activates/deactivates immediate heating mode (▷ page 121) P Sets the programmed times (▷ page 116) Sets the weekday, time and the operating duration (▷ page 121) Sets the heating level (▷ page 122)
③	Display panel for: time, heating level and operating duration Continuous operation active Heating level set
④	• Selects options in program column ① or menu bar ② (forwards) • Increases values
⑤	Confirms the selection or setting
⑥	Status bar Heating mode activated
⑦	• Activates timer (▷ page 120) • Cancels or ends settings in a menu
⑧	• Selects options in program column ① or menu bar ② (backwards) • Reduces values

Activating the timer

The timer switches to standby mode after 10 seconds. The display goes off.

▶ Press and hold the ⏻ button until the menu bar appears in the display and the time is shown.

Setting the weekday, time and operating duration

You must reset the weekday, time, and default value for the operating duration:

- during initial operation
- after a malfunction
- or if the battery has been disconnected

You can find further information on malfunctions in the "Practical advice" section (▷ page 249).

▶ Press the ◀ or the ▶ button until the ⏲ symbol in the menu bar flashes.

▶ Press the OK button.
In the program column, the day selected flashes.

▶ Press the ◀ or ▶ button to set the desired weekday.

▶ Press the OK button.
The day selected is stored. The hour setting of the clock flashes.

▶ Depending on the weekday selected, set the hour and subsequently the minutes, then confirm by pressing the OK button.
The time is stored. The program column disappears and the operating duration flashes.

ⓘ The operating duration set becomes the default setting for immediate heating mode. You can set the operating duration from 10to 120 minutes or activate continuous operation.

▶ Using the ◀ or ▶ button, set the minute value or select the ∞ symbol for continuous operation.

▶ Press the OK button.
The operating duration is stored. The time is shown.

Activating/deactivating immediate heating mode

▶ **To switch on:** press the ◀ or ▶ button until the ≋ symbol in the menu bar flashes.

▶ Press the OK button.
The operation duration flashes in the display.

ⓘ You can preset the default value that is shown (▷ page 120).

▶ Using the ◀ or ▶ button, set the minute value (10 – 120) or select the ∞ symbol for continuous operation.

▶ Press the OK button.
Immediate heating mode is activated. The time and the ≋ symbol appear.

▶ **To switch off:** press the ◀ or ▶ button until the ≋ symbol flashes in the menu bar, and then press the OK button.
Immediate heating mode is deactivated. The ≋ symbol disappears.
The auxiliary heating operates for about anothertwo minutesand then switches off automatically.

ⓘ If you switch off the ignition while immediate heating mode is active (operating duration 10 – 120minutes), immediate heating mode is also switched off. The auxiliary heating operates for about anothertwo minutesand then switches off automatically.

If you have set continuous operation as the operating duration and you switch off the ignition, the auxiliary heating switches off automatically after about 15 minutes. If, in the remaining time, the ignition is switched on again, continuous operation of the auxiliary heating continues.

Setting the preselection time

⚠ **WARNING**
The auxiliary heating must not be operated if there are highly flammable substances nearby or in enclosed spaces without an

extraction system. Make sure that the auxiliary heating is not switched on automatically by the timer in such places. If this possibility exists, deactivate the respective programmed time.

You can set three preselection times using the timer.

Observe that when setting the preselection time, this does not correspond to the switch-on time but to the switch-off or departure time. The auxiliary heating system starts up automatically and runs for the operating duration set prior to departure.

Example:

For a planned departure time of 7:00 a.m. you should also set the preselection time to 7:00 a.m. If the operating duration is preset to 40 minutes, for example, the auxiliary heating starts up at 6:20 a.m.

ⓘ If an identical time (time and weekday) is set in the preselection memory, only the last time set is saved.

After a malfunction or if the battery has been disconnected, you must set the preselection times again. You can find further information on malfunctions in the "Practical advice" section (▷ page 249).

- ▶ Press the ◀ or the ▶ button until the P symbol in the menu bar flashes.
- ▶ Press the OK button.
  In the program column, the 123 preselection memory numbers appear. The selected preselection memory flashes.
- ▶ Press the ◀ or ▶ button to select the desired preselection memory.
- ▶ Press the OK button.
  The preselection memory is selected. The weekdays are shown.
- ▶ Set the weekday and time as described in the "Setting the weekday, time and operating duration" section (▷ page 121).
  The preselection time is stored. The program column disappears. In the display panel, the on message and the ≋ symbol appear.
- ▶ Press the OK button.
  The operating duration flashes.
- ▶ Press the ◀ or ▶ button to set the minute value (10 – 120).
- ▶ Press the OK button.
  The operating duration for the preselection time is saved. The time and number of the selected preselection memory are shown.

ⓘ The preselection memory that will be activated next is underlined. Additionally, the weekday that is set appears.

Deactivating the preselection time

- ▶ Carry out the steps as described in the "Setting the preselection time" section.

If the ≋ symbol in the status bar is shown:

- ▶ Press the ◀ or ▶ button until the off message in the display panel is shown.
- ▶ Press the OK button.
  The preselection time is stored. The time is shown.

Setting the heating level

You can set the heating level to a range between 10 and 30.

ⓘ The heating level corresponds to a preselection temperature for the vehicle interior. This is a guide value and may, depending on the outside temperature, differ from the actual vehicle interior temperature.

- ▶ Press the ◀ or the ▶ button until the ↻ symbol in the menu bar flashes.
- ▶ Press the OK button.
  The heating level display flashes.
- ▶ Using the ◀ or ▶ buttons, set the desired heating level to a range between 10 and 30.
- ▶ Press the OK button.
  The heating level is set and the ≋ symbol appears.

Heater booster function

The fuel-fired auxiliary heater heats the vehicle interior as quickly as possible while the engine is running.

The auxiliary heating automatically switches to heater booster mode after the engine is started.

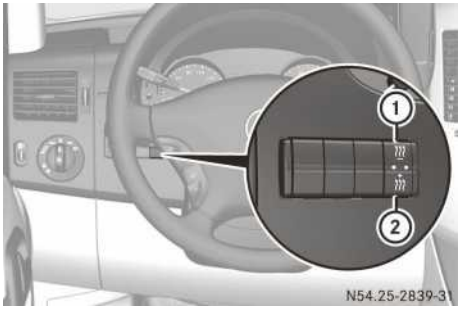

Vehicles with hot-water auxiliary heater

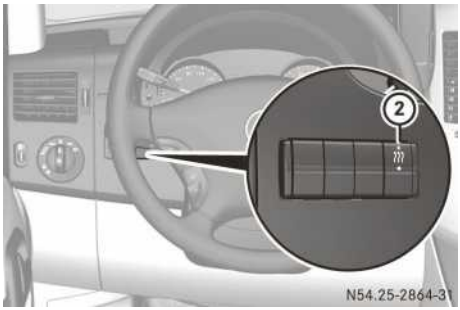

① To switch the hot-water auxiliary heater on/off

② To switch the heater booster function on/off

▶ **To switch on/off:** press the switch. The indicator lamp in the switch lights up if the heater booster function is switched on.

After switching off, the heater booster function operates for about another two minutes and then switches off automatically.

If you switch off the engine without switching off the heater booster function, the system will be switched on the next time the engine is started (memory function).

Roof ventilator

The roof ventilator can be used to ventilate or extract air from the vehicle interior.

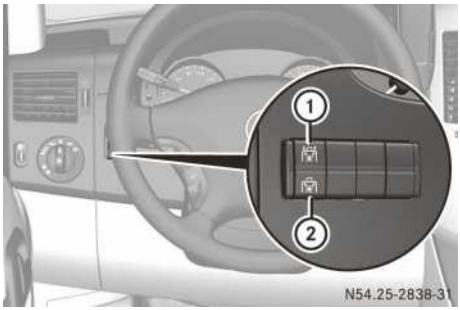

▶ Turn the key to position **2** in the ignition lock.

▶ **To extract air:** press the upper section of switch ①.
The roof ventilator removes used air from the load compartment.

▶ **To ventilate:** press the lower section of switch ②.
The roof ventilator feeds fresh air into the load compartment.

▶ **To switch off:** set the switch to the middle position.

Driving and parking

Preparing for a journey

Visual check of the vehicle exterior

▶ In particular, check the following components on the vehicle, and on the trailer as necessary:

- licence plates, vehicle lighting, turn signals, brake lamps and wiper blades for dirt and damage
- tyres and wheels for firm seating, correct tyre pressure and general condition

- that platform side gates and tailgate are secured properly and that they are not damaged
- trailer tow hitch for play and security

The towing device is one of the most important components on the vehicle with regard to road safety. The separate instructions issued by the manufacturer pertaining to operation, care and maintenance should be observed.

▶ Rectify any noticeable defects before commencing the journey.

Checks in the vehicle

Emergency equipment/first-aid kit

The equipment for first aid and breakdown assistance is located in the stowage compartment in the driver's/co-driver's door.

▶ Check the equipment to make sure that it is accessible, complete and ready for use.

Vehicle lighting

▶ Turn the key to position **2** in the ignition lock.

▶ Check with the help of another person that the lighting system is working correctly.

▶ Replace defective bulbs (▷ page 269).

Before pulling away

⚠ WARNING

Movement of the pedals should never be restricted. Otherwise, this will jeopardise the operational and road safety of the vehicle.

Objects in the footwell could get caught between the pedals if you accelerate or brake suddenly. You may no longer be able to brake, declutch or accelerate. You could then cause an accident, thereby endangering yourself and others.

- When using floormats or carpets, make sure that they are fitted securely, that they cannot slip and that there is sufficient clearance for the pedals. Do not place several floormats on top of one another.
- Do not place any objects in the driver's footwell.
- Any loose objects must be stowed away securely so that they are prevented from moving into the driver's footwell while driving.

⚠ WARNING

If they are not properly closed, the doors could open while the vehicle is in motion. This may, for example, cause you to lose your load and injure passengers or endanger other road users.

For this reason, please make sure that all the doors are properly closed and can be locked before starting your journey.

▶ Close all the doors.

▶ Secure the load according to the loading guidelines (▷ page 176).

▶ Make sure that the floormats and carpets are properly secured so that they cannot slip and obstruct the pedals.

Starting the engine

Important safety notes

⚠ WARNING

Do not place any objects in the driver's footwell. If you use a floormat or carpet in the driver's footwell, make sure that it is correctly secured and that there is sufficient clearance for the pedals.

Do not place several floormats on top of one another.

Loose objects or the floormats could otherwise get caught between the pedals if you accelerate or brake suddenly. You will then not be able to brake, declutch or accelerate as intended. This could lead to accidents and injury.

⚠ WARNING

Never leave the engine running in enclosed spaces. The exhaust gases contain carbon monoxide. Inhaling exhaust fumes constitutes a health hazard and could lead to loss of consciousness or even death.

! Do not depress the accelerator pedal when starting the engine.

ⓘ If you depress the brake pedal before starting the engine, the pedal travel is short and pedal resistance is high.

If you depress the brake pedal again after starting the engine, pedal travel and resistance will be back to normal again.

▶ Before starting the engine, make sure that:

- all the doors are closed.
- all the vehicle occupants are wearing their seat belts correctly.
- the parking brake is applied.

Manual transmission

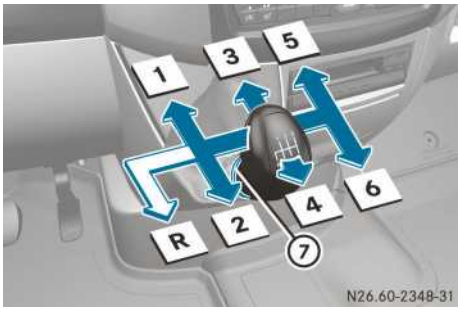

Gearshift pattern

R Reverse gear

1 – 6 Forward gears

⑦ Reverse gear pull ring

▶ Depress the brake pedal and keep it depressed.

▶ Depress the clutch pedal completely.

▶ Shift the manual transmission into neutral.

You can only start the engine if the clutch pedal is depressed completely.

If, when starting the engine on vehicles with a diesel engine, the clutch pedal is not depressed or is not sufficiently depressed:

- on vehicles without steering wheel buttons, the indicator lamp in the instrument cluster goes on.
- on vehicles with steering wheel buttons, the Depress clutch message appears in the display.

Automatic transmission

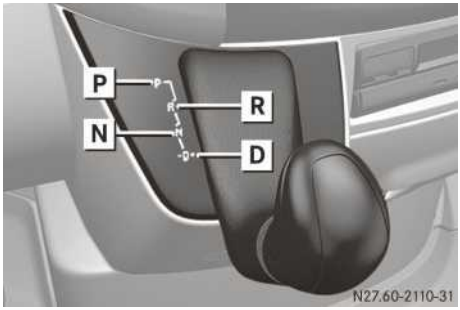

Gearshift pattern

P Park position with selector lever lock

R Reverse gear

N Neutral

D Drive

▶ Move the selector lever to position **P**.

ⓘ You can also start the engine in neutral **N**.

Starting the engine

ⓘ The "touch-start" function is available on vehicles with automatic transmission. To use this function, turn the key to position **3** in the ignition lock and release it immediately. The engine starts automatically.

- ▶ **Petrol engine:** turn the key to position **3** in the ignition lock and release it as soon as the engine is running.
- ▶ **Diesel engine:** turn the key to position **2** in the ignition lock.
  The preglow indicator lamp in the instrument cluster lights up.
- ▶ When the preglow indicator lamp goes out, turn the key to position **3** in the ignition lock and release it as soon as the engine is running.

ⓘ You can start the diesel engine without preglow when the engine is warm.

If the diesel engine is cold, the engine idling speed may be higher after starting the engine. The increased engine idling speed will be automatically reduced to the normal engine idling speed within several seconds.

Pulling away

Important safety notes

⚠ **WARNING**

Do not shift down unless the speed is within the permissible range of the gear you wish to change to.

Do not shift down for additional engine braking on a slippery road surface. This could cause the drive wheels to lose their grip and the vehicle could skid. This could cause you to lose control of your vehicle and cause an accident.

ⓘ The vehicle locks centrally once you have pulled away. The locking knobs in the doors drop down. You can open the doors from the inside at any time.

Automatic door locking can be deactivated (▷ page 56).

Manual transmission

Pulling away

- ▶ Depress the brake pedal and keep it depressed.
- ▶ Depress the clutch pedal completely.
- ▶ Shift to first gear or reverse gear.
- ▶ Release the parking brake (▷ page 131). The PARK indicator lamp in the instrument cluster goes out.
- ▶ Release the brake pedal.
- ▶ Release the clutch pedal slowly and accelerate carefully.

ⓘ On vehicles with the starting-off aid, the brake pressure is automatically maintained for a further two seconds after the brake pedal is released. This makes it possible to pull away without the vehicle immediately rolling back.

Gearshift recommendation

The upshift indicator in the display indicates that it is possible to upshift and shows the recommended gear. The gear recommendation helps to reduce your vehicle's fuel consumption.



Upshift indicator (example: vehicles without steering wheel buttons)



Upshift indicator (example: vehicles with steering wheel buttons)

① Recommended gear

If your vehicle is fitted with the ECO-Start function, a gearshift recommendation to shift to neutral is also shown (▷ page 142).

Engaging reverse gear

! Only shift into reverse gear **R** when the vehicle is stationary. Otherwise, you could damage the transmission.

i On vehicles with a reverse warning feature, a warning signal sounds when reverse gear is engaged to alert other road users.

- ▶ Draw the pull ring upwards and hold it in this position (▷ page 125).
- ▶ Move the gear lever as far as possible to the left and then push it down.
- ▶ Release the pull ring.

Automatic transmission

- ▶ Depress the brake pedal and keep it depressed.
  The selector lever lock is released.
- ▶ Move the selector lever to position **D** or **R**.

i On vehicles with a reverse warning feature, a warning tone sounds when reverse gear **R** is engaged to alert other road users.

! Only shift into reverse gear **R** when the vehicle is stationary. Otherwise, you could damage the transmission.

- ▶ Release the parking brake (▷ page 131). The (P) PARK indicator lamp in the instrument cluster goes out.
- ▶ Release the brake pedal.
- ▶ Carefully depress the accelerator pedal.

General driving tips

Steering

⚠ **WARNING**

Never switch the engine off while the vehicle is in motion.

There is no power assistance for the steering and the service brake when the engine is not running.

You will require considerably more effort to steer and brake, and you could therefore lose control of the vehicle and cause an accident.

! Do not hold the steering wheel at full steering angle for a long time, e.g. when turning or manoeuvring.

The hydraulic pump could be damaged if the hydraulic fluid temperature increases.

Overrun cut-off

If you take your foot off the accelerator pedal, the petrol/diesel fuel supply is cut off in overrun mode when the engine speed is out of the idle speed control range.

Ground clearance

! Always observe the ground clearance of the vehicle and avoid obstacles. On vehicles with a step, ground clearance is further restricted. Obstacles can damage the vehicle.

If you must drive over obstacles, drive especially slowly and carefully. If necessary, have another person direct you.

Driving in wet conditions

⚠ **WARNING**

There is a danger of aquaplaning occurring, even if you are driving slowly and your tyres have sufficient tread depth, depending on the depth of water on the road.

For this reason, avoid tyre ruts and brake carefully.

Driving on flooded roads

If you have to drive through water, the water level must not rise above the bottom edge of the bumper. The maximum speed at which you may drive is walking speed.

! Bear in mind that vehicles travelling in front or in the opposite direction create waves. This may cause the maximum permissible water depth to be exceeded.

These notes must be observed under all circumstances. You could otherwise damage the engine, the electronics or the transmission.

Driving in winter

Drive particularly carefully on slippery roads in winter. Avoid sudden acceleration, steering and braking manoeuvres.

⚠ **WARNING**

Do not shift down unless the speed is within the permissible range of the gear you wish to change to.

Do not shift down for additional engine braking on a slippery road surface. This could cause the drive wheels to lose their grip and the vehicle could skid. This could cause you to lose control of your vehicle and cause an accident.

If the vehicle threatens to skid or cannot be stopped when moving at low speed:

- depress the clutch pedal on vehicles with manual transmission
- shift to neutral position **N** on vehicles with automatic transmission
- try to maintain control of the vehicle using corrective steering

! Vehicles with automatic transmission may roll only briefly in the neutral position **N**. Prolonged rolling of the wheels, e.g. when being towed, will result in transmission damage.

Road salt may adversely affect braking performance. In order to achieve the normal braking effect, you will need to apply more force to the brake pedal. Apply the brakes repeatedly when driving for longer periods on gritted or salted roads. This will restore the brakes to their normal level of performance.

When stopping the vehicle after travelling on roads that have been salted, make sure that the brakes are fully functional before proceeding further.

i Fit snow chains to the outside rear wheels (driven axle) in good time for driving on snow, slush or ice. Comply with the manufacturer's fitting instructions.

You will find information about winter tyres and about driving with snow chains in the "Operation" section (▷ page 185).

Tyre traction

⚠ **WARNING**

Whereas the vehicle can be fully controlled at a certain speed on dry roads, you must reduce your speed on wet or icy roads to achieve the same road safety. You could otherwise cause an accident.

Pay particular attention to the road conditions at temperatures around freezing point.

If ice has formed on the road surface (e.g. from fog), a thin film of water rapidly forms on the ice when you brake, considerably reducing tyre traction. Drive with particular care in such weather conditions.

Stopping the vehicle and switching off the engine

⚠ **WARNING**

Always switch off the engine and apply the parking brake before leaving the vehicle. Otherwise, the vehicle could roll away if it is not secured.

On gradients steeper than 15%:

- secure an unladen vehicle at the front axle, e.g. using a wheel chock or similar object.
- additionally secure a laden vehicle at the rear axle, e.g. using a wheel chock or similar object.

⚠ WARNING

Under no circumstances should the exhaust system come into contact with flammable materials such as dry grass or petrol, for example. Do not park the vehicle on dry grassland or harvested grain fields. The hot exhaust system could otherwise ignite the flammable material and set the vehicle on fire.

⚠ WARNING

Only remove the key from the ignition lock when the vehicle is stationary, as you cannot steer the vehicle with the key removed.

Never leave children unsupervised in the vehicle. They could release the parking brake. This could lead to a serious or fatal accident.

! When the vehicle is parked, always remove the key to prevent the battery from becoming discharged.

On vehicles with a battery isolating switch, switch off the power supply if the vehicle is to be out of use for a longer period of time.

⚠ WARNING

You must use the parking lamp to enable your vehicle to be recognised on public roads when it is dark. You can also use the reflective night parking signs in built-up areas.

Observe legal requirements.

- ▶ Stop the vehicle.
- ▶ Shift the manual transmission into neutral or the automatic transmission to position **P**.
- ▶ Apply the parking brake.

i On steep slopes, turn the front wheels towards the kerb.

! If the coolant temperature is very high, e.g. after driving on hilly roads, leave the engine running at idle speed for about two minutes before turning it off.

This allows the coolant temperature to return to normal.

- ▶ **To switch off the engine:** turn the key to position **0** in the ignition lock and remove it.
  The immobiliser is activated.
- ▶ Switch on the side lamps if necessary.
- ▶ On uphill or downhill gradients, secure the vehicle against rolling away at the axle with the heaviest axle load by using a wheel chock or something similar.
  Use the wheel chock (▷ page 215) for this purpose.

Brakes

ABS (Anti-lock Braking System)

Important safety notes

⚠ WARNING

Do not depress the brake pedal repeatedly (pumping). Depress the brake firmly and evenly. Pumping the brake pedal reduces the braking effect.

⚠ WARNING

You should always adapt your driving style to suit the prevailing road and weather conditions and maintain a sufficient distance from other road users and objects on the road.

If ABS is faulty, the wheels could lock when braking. This limits the steerability of the vehicle when braking and the braking distance may increase.

If ABS is deactivated due to a fault, then BAS is also deactivated.

ABS controls the braking pressure so that the wheels do not lock when braking. This maintains the steerability of your vehicle while braking.

ABS works from a speed of about 5 km/h upwards, regardless of road surface conditions.

If the road is slippery, ABS intervenes even if you only brake gently.

If the (ABS) indicator lamp is lit continuously when the engine is running, there is a malfunction (▷ page 219).

Despite this, the normal driving and braking functions remain available.

Brakes

If ABS intervenes during braking, you will feel the brake pedal pulsate.

If ABS intervenes:

- ▶ Keep the brake pedal firmly depressed until the braking situation has passed.

When you fully apply the brakes:

- ▶ Press the brake pedal as hard as you can.

BAS (Brake Assist)

⚠ WARNING

If BAS has malfunctioned, the braking system remains available with full brake boosting effect. However, braking force is not automatically increased in emergency braking situations and the stopping distance may increase.

Brake Assist operates in emergency braking situations. If you depress the brake quickly, BAS automatically increases the brake pressure, thereby reducing the stopping distance.

- ▶ Keep the brake pedal depressed firmly until the emergency braking situation is over. ABS prevents any of the wheels from locking.

When you release the brake pedal, the brakes function as usual again. BAS is deactivated.

Vehicles without steering wheel buttons:

If the (!) indicator lamp is lit continuously when the engine is running, there is a malfunction (▷ page 221).

Adaptive brake lamps

The adaptive brake lamps are activated if the vehicle is braked suddenly from a speed of more than 50 km/h and ESP® detects an emergency braking procedure. The brake lamps flash quickly, thereby increasing the attention of the drivers behind your vehicle.

After the emergency braking procedure, the adaptive brake lamps are deactivated and the brake lamps are again continuously lit when the brake pedal is depressed.

The hazard warning lamps switch on automatically once the vehicle is stationary if the vehicle is braked to a halt from a speed of more than 70 km/h with flashing brake lamps. The brake lamps light up again constantly when you depress the brake pedal. The hazard warning lamps switch off automatically once you drive faster than 10 km/h.

You can also switch off the hazard warning lamps with the hazard warning lamp switch (▷ page 102).

EBD (electronic brake force distribution)

EBD monitors and controls the brake pressure to the rear wheels. Therefore, EBD improves driving stability when braking.

⚠ WARNING

If the (ESP), (!), (ABS) and (BRAKE) indicator lamps light up during the journey, there may be a malfunction in the electronic brake force distribution (EBD). The vehicle could then start to skid when you apply the brakes. You should therefore drive with particular care.

Adjust your driving style to the road and traffic conditions.

Driving too fast increases the risk of an accident.

Have any malfunction rectified immediately at a qualified specialist workshop.

Parking brake

⚠ WARNING

Never leave children unsupervised in the vehicle. They could release the parking brake. This could lead to a serious or fatal accident.

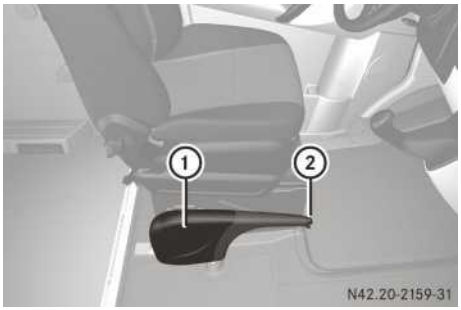

ⓘ Only apply the parking brake when the vehicle is stationary.

- **To apply the parking brake:** pull brake lever ① up as far as the last possible detent.
  The (P) PARK indicator lamp in the instrument cluster lights up.

ⓘ On vehicles with a folding brake lever, you can then press lever ① down to the stop.

- **To release the parking brake:** on vehicles with a folding brake lever, first pull brake lever ① up to the stop.
- Raise brake lever ① slightly and press release knob ②.
- Guide brake lever ① down to the stop.
  The (P) PARK indicator lamp in the instrument cluster goes out.

As a rule, you should only apply the parking brake when the vehicle is stationary.

⚠ WARNING

If the brake lever is applied abruptly, the rear wheels could lock. The vehicle could then go into a skid.

Make sure that you apply the brake lever carefully to ensure that braking application is moderated.

In exceptional cases, the parking brake can be used for emergency braking if the service brake fails.

- **Emergency braking:** press and hold release button ② and carefully apply brake lever ①.

Automatic transmission

Important safety notes

⚠ WARNING

Do not change down for additional engine braking on a slippery road surface. This could cause the drive wheels to lose their grip and the vehicle could skid.

⚠ WARNING

Apply the parking brake and move the selector lever to **P** when working on the vehicle. Otherwise, the vehicle could roll away.

! Vehicles with automatic transmission may roll only briefly in the neutral position **N**. Prolonged rolling of the wheels, e.g. when being towed, will result in transmission damage.

Overview

Your vehicle may be equipped with a 5-speed or 7-speed automatic transmission.

The automatic transmission adapts to your individual driving style by continuously adjusting its shift points. These shift point adjustments take into account the current operating and driving conditions. If the operating or driving conditions change, the automatic transmission reacts by adjusting the gearshift program.

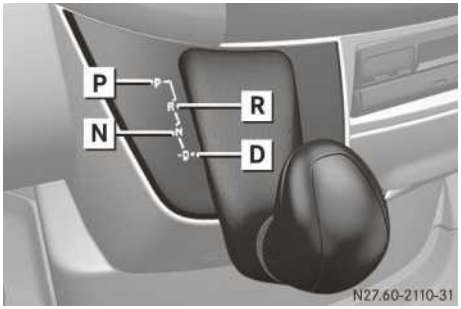

When the selector lever is in position **D**, the automatic transmission automatically shifts into each gear. This depends on:

- a possible shift range restriction (▷ page 133)
- the position of the accelerator pedal
- the road speed

When the selector lever is in position **D**, you can influence the gearshifts made by the automatic transmission. You can restrict the shift range or perform the gearshifts yourself.

The selector lever position or the current shift range is shown in the display:

- on vehicles with steering wheel buttons (▷ page 85)
- on vehicles without steering wheel buttons (▷ page 81)

Selector lever positions

P	**Park position** This prevents the vehicle from rolling away when stopped. Only move the selector lever to **P** when the vehicle is stationary. You can only remove the key in this selector lever position. The selector lever is locked in position **P** when the key is removed.
R	**Reverse gear** Only move the selector lever to **R** when the vehicle is stationary.
N	**Neutral** No power is transmitted from the engine to the drive wheels. Releasing the brakes will allow you to move the vehicle freely, e.g. by pushing or towing. Do not move the selector lever to **N** while driving. The automatic transmission could otherwise be damaged. If ASR is deactivated or ESP® has malfunctioned: only move the selector lever to **N** if the vehicle is in danger of skidding, e.g. on icy roads.
D	**Drive** The automatic transmission shifts automatically. All forward gears are available.

Touchshift

When the selector lever is in position **D**, you can perform gearshifts yourself.

▶ **To shift down:** press the selector lever to the left towards **D–**.
The automatic transmission shifts to the next gear down, depending on the gear currently engaged. The shift range is also restricted.

ⓘ The automatic transmission does not shift down if you press the selector lever towards **D–** while travelling at too high a speed. This protects from engine overrevving.

▶ **To shift up:** briefly press the selector lever to the right towards **D+**.
The automatic transmission shifts to the next gear up, depending on the current gearshift program. This also extends the shift range.

- ▶ **To derestrict the shift range:** press and hold the selector lever towards **D+** until D appears again in the display.
  The automatic transmission shifts from the current shift range directly to **D**.
- ▶ **To select the optimum shift range:** press and hold the selector lever to the left towards **D–**.
  The automatic transmission will shift to a range which allows easy acceleration and deceleration. To do this, the automatic transmission will shift down one or more gears.

Shift ranges

When the selector lever is in position **D** you can restrict or derestrict the shift range for the automatic transmission.

- ▶ **To extend/restrict the shift range:** briefly press the selector lever to the right towards **D+** or to the left towards **D–**.
  The set shift range is shown in the display.
  The automatic transmission shifts only as far as the relevant gear.

ⓘ If the maximum engine speed of the restricted shift range is reached and you depress the accelerator pedal, the automatic transmission will not shift up.

Driving conditions	
2	Use the braking effect of the engine on downhill gradients and for driving: • on steep mountain roads • in mountainous terrain • in arduous conditions
1	Use the braking effect of the engine on extremely steep downhill gradients and long downhill stretches.

Driving tips

Accelerator pedal position

Your style of driving influences how the automatic transmission shifts gear:

- little throttle: early upshifts
- lots of throttle: later upshifts

Kickdown

Use kickdown for maximum acceleration:

- ▶ Depress the accelerator pedal beyond the pressure point.
  The automatic transmission shifts to the next gear down, depending on the engine speed.
- ▶ Ease off on the accelerator pedal once the desired speed is reached.
  The automatic transmission shifts up again.

Manoeuvring

Manoeuvring in a tight space:

- ▶ Control the vehicle's speed by braking carefully.
- ▶ Accelerate only slightly and avoid jolting.

ⓘ At low speeds, you can shift back and forth between drive position **D** and reverse gear **R** without applying the brakes. This helps when manoeuvring rapidly or when rocking the vehicle out of snow or slush, for example.

Towing a trailer

- ▶ On uphill gradients, drive at medium engine speeds.
- ▶ Depending on the uphill or downhill gradient, shift down to an appropriate shift range (▷ page 133), even if cruise control is activated.

Driving the vehicle

Starting-off aid

On vehicles with manual transmission, the starting-off aid assists you when pulling away.

When the engine is running, the starting-off aid automatically maintains the brake pressure for about two more seconds after the brake pedal is released. This makes it possible to pull away without the vehicle immediately rolling away on slight uphill gradients.

The starting-off aid is deactivated on level ground, when the parking brake is applied or when the transmission is in neutral.

⚠ WARNING

The starting-off aid is not a replacement for the parking brake. The vehicle may roll away on uphill and downhill gradients.

Always apply the parking brake after parking the vehicle.

Vehicles without steering wheel buttons: if the indicator lamp is lit continuously when the engine is running, there is a malfunction (▷ page 219).

ⓘ The starting-off aid is no longer available if ESP® is deactivated due to a malfunction (▷ page 219).

ASR (Acceleration skid control)

General notes

ASR improves traction, i.e. the transfer of power from the tyres to the road surface, for a sustained period and, thereby, also improves the driving stability of the vehicle. ASR assists you when pulling away and accelerating, especially on smooth and slippery surfaces.

ASR brakes individual drive wheels and limits the engine torque to prevent the drive wheels from spinning. When ASR intervenes, the ⚠ warning lamp in the instrument cluster flashes.

If the road surface is not capable of providing sufficient traction (taking tyres, load and gradient into consideration), it will not be possible to pull away smoothly, even with ASR.

Vehicles without steering wheel buttons: if the indicator lamp is lit continuously when the engine is running, there is a malfunction (▷ page 219).

If ASR malfunctions, engine power output may be reduced.

Activating/deactivating ASR

ASR is automatically activated when the engine is switched on.

It may be best to deactivate ASR briefly in the following situations:

- if snow chains are being used
- in deep snow
- on sand or gravel

If you deactivate ASR:

- engine torque is not limited and the drive wheels are able to spin. The spinning wheels produce a cutting effect which improves traction.
- traction control still intervenes by braking if one drive wheel reaches its grip limit, e.g. if the surface under one side of the vehicle is slippery. The wheel is then braked to increase traction in this situation.
- ESP® still intervenes to stabilise the vehicle.

⚠ WARNING

ESP® remains active despite ASR having been deactivated and intervenes by braking if this is necessary to improve driving stability. The ⚠ warning lamp flashes.

If ASR is deactivated, there is an increased risk that the vehicle's brake system could overheat and be damaged when subjected to high loads for a long period of time. When the brakes are hot, the stopping distance increases.

For this reason, only deactivate ASR when it is absolutely necessary.



▶ Press button ①.
If ASR is deactivated, the ⚠ warning lamp in the instrument panel lights up.

ESP® (Electronic Stability Program)

General notes

ESP® monitors driving stability and detects understeer or oversteer (skidding) in good time. ESP® stabilises the vehicle by braking individual wheels as well as limiting the engine power output. ESP® greatly assists you when driving on wet or slippery road surfaces. ESP® also stabilises the vehicle when braking.

The ⚠ warning lamp in the instrument cluster lights up when ESP® is intervening.

⚠ WARNING

Proceed as follows if the ⚠ warning lamp in the instrument cluster flashes:

- do not deactivate ASR under any circumstances.
- when pulling away, only depress the accelerator pedal as far as required.
- adapt your driving style to suit the prevailing road and weather conditions.

Otherwise, the vehicle could start to skid.

ESP® cannot reduce the risk of an accident if you drive too fast. ESP® is unable to override the laws of physics.

If the 🚗 indicator lamp is lit continuously when the engine is running, there is a malfunction (▷ page 222) and the engine power output may be reduced.

! Only operate the vehicle briefly (maximum of 10 seconds) on a brake dynamometer. The key must be turned to position **1** in the ignition lock during this time. You could otherwise damage the drivetrain or the brake system.

! Do not operate the vehicle on a roller dynamometer (e.g. for performance testing). If you have to operate the vehicle on a roller dynamometer, please consult a specialist workshop beforehand. You could otherwise damage the drivetrain or the brake system.

ESP® trailer stabilisation

ESP® trailer stabilisation counteracts critical driving situations in good time and thereby provides considerable assistance when driving with a trailer.

ESP® trailer stabilisation is controlled by the complex ESP® sensor system and evaluation logic. It is active at speeds above approximately 65 km/h.

If the sensor system detects trailer swinging movements, ESP® trailer stabilisation firstly brakes individual vehicle wheels in a targeted manner. It thus counteracts swinging movements. If the swinging movements do not stop, the vehicle is braked until the vehicle/trailer combination is stabilised. If necessary, the vehicle's engine output is limited.

▶ Brake if the trailer begins to swing.
ESP® trailer stabilisation helps you to stabilise the vehicle/trailer combination.

⚠ WARNING

In poor road and weather conditions, ESP® trailer stabilisation cannot prevent the vehicle/trailer combination from swinging. Trailers with a high centre of gravity may tip over before ESP® trailer stabilisation can intervene.

Adapt your driving style to suit the prevailing road and traffic conditions.

You could otherwise lose control of the vehicle/trailer combination and cause an accident, injuring yourself or others.

All-wheel-drive

Electronic Traction System (4ETS)

General notes

The vehicle may be equipped with either engageable all-wheel drive (▷ page 136) or permanent all-wheel drive.

Vehicles with all-wheel drive are equipped with 4ETS. The 4ETS electronic traction system is integrated in ESP®. It assists you in pulling away or accelerating on slippery surfaces. It does this by braking the wheels individually if they start to spin.

The ⚠ warning lamp in the instrument cluster flashes when at least one tyre has exceeded its grip limit at any speed.

ⓘ Press the accelerator pedal down further than necessary, despite the flashing warning lamp, only when travelling slowly. This gives optimal traction in the lower speed range.

ⓘ Heavy braking reduces the performance of 4ETS.

❗ On vehicles with engageable and permanent all-wheel drive, function or performance tests may only be carried out on a 2-axle dynamometer. If you wish to operate the vehicle on such a dynamometer, please consult a Mercedes-Benz Service Centre beforehand. You could otherwise damage the drive train or the brake system.

Engageable all-wheel drive

You can engage or disengage all-wheel drive when:

- the engine is running.
- the vehicle is not travelling faster than 10 km/h.
- the vehicle is not being driven around a bend.

ⓘ When you engage all-wheel drive, variable Speedtronic is automatically deactivated. The corresponding display message is cleared. If required, it will be necessary to reactivate variable Speedtronic after the engine has automatically restarted (▷ page 148).

Engaging/disengaging all-wheel drive



▶ **To engage all-wheel drive:** press button ①.

The indicator lamp in the button flashes.

While the indicator lamp in the button flashes, the [warning lamp] and [warning lamp] warning lamps in the instrument cluster also light up, depending on the vehicle's equipment. ASR and ESP® are deactivated.

While the indicator lamp in the button flashes, you can cancel the gear change process by pressing button ① again.

ⓘ If it is not possible to engage all-wheel drive when the vehicle (with automatic

transmission) is stationary, shift the selector lever from **N** to **D** or **R** and back again.

If it is not possible to engage all-wheel drive when the vehicle is rolling:

- depress the clutch pedal on vehicles with manual transmission.
- shift the selector lever briefly to position **N** on vehicles with automatic transmission.

Once the gear change is complete:

- the indicator lamp in the button lights up.
- the display on vehicles with steering wheel buttons shows the message Four-wheel drive engaged.
- the [ESP] and [ASR] warning lamps in the instrument cluster go out and ASR and ESP® are reactivated.

If the gear change fails, the indicator lamp in button ① briefly flashes three times. One of the conditions for changing gear was not met.

▶ **To disengage all-wheel drive:** press button ①.
The indicator lamp in the button flashes.

While the indicator lamp in the button flashes, the [ESP] and [ASR] warning lamps in the instrument cluster also light up, depending on the vehicle's equipment. ASR and ESP® are deactivated.

If all-wheel drive cannot be disengaged when the vehicle (with automatic transmission) is stationary, shift the selector lever from **N** to **D** or **R** and back again.

If it is not possible to disengage all-wheel drive when the vehicle is rolling:

- depress the clutch pedal on vehicles with manual transmission.
- shift the selector lever briefly to position **N** on vehicles with automatic transmission.

Once the gear change is complete:

- the indicator lamp in the button goes out.
- the display on vehicles with steering wheel buttons no longer shows the message Four-wheel drive engaged.
- the [ESP] and [ASR] warning lamps in the instrument cluster go out and ASR and ESP® are reactivated.

If the gear change fails, the indicator lamp in the button briefly flashes three times. One of the conditions for changing gear was not met.

If the LOW RANGE gear ratio is activated, all-wheel drive cannot be disengaged.

LOW RANGE gear ratio

General notes

The LOW RANGE gear reduction unit assists you while driving on difficult terrain. When LOW RANGE is engaged, the engine power and gearshift characteristics of the automatic transmission are adapted.

You will find information on driving off-road in the "Operation" section (▷ page 172).

Shift ranges

On-road position for all normal driving conditions.

LOW RANGE for driving on difficult terrain.

The gear ratio from the engine to the wheels is around 40% lower than in the on-road position. The drive torque is increased correspondingly.

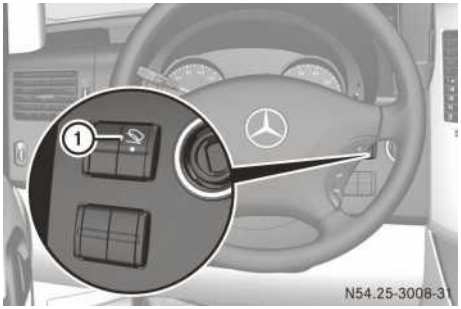

① To engage/disengage LOW RANGE

Engaging LOW RANGE

Only engage LOW RANGE if:

- the engine is running.
- the vehicle is stationary.
- the brake pedal is depressed.
- the manual transmission is in neutral/the automatic transmission is in position **P** or **N**.
- all-wheel drive is engaged (vehicles with engageable all-wheel drive).

▶ Press button ①.
The indicator lamp in the instrument cluster flashes.

ⓘ As long as the indicator lamp in the instrument cluster flashes, you can cancel the gear change process by pressing button ① again.

When the gear change is complete, the indicator lamp in the instrument cluster lights up.

ⓘ If the gear change fails, the indicator lamp in the instrument cluster briefly flashes three times. One of the conditions for changing gear was not met.

Disengaging LOW RANGE

Only disengage LOW RANGE if:

- the engine is running.
- the vehicle is stationary.
- the brake pedal is depressed.
- the manual transmission is in neutral/the automatic transmission is in position **P** or **N**.

▶ Press button ①.
The indicator lamp in the instrument cluster flashes.

When the gear change is complete, the indicator lamp in the instrument cluster goes out.

Brake temperature monitor

The 4ETS traction system detects overheating in the brake system. If the brake system is overheated, the ⚠ warning lamp in the instrument cluster flashes slowly. Performance of 4ETS is limited until the brake system has cooled sufficiently.

The brake remains operational and is also protected.

⚠ **WARNING**

If the ⚠ warning lamp in the instrument cluster flashes slowly, the braking system is overheated.

The braking power may be reduced, which will cause the braking distance to increase.

The performance of the 4ETS traction system is restricted.

- Increase the distance to the vehicle in front of you.
- Accelerate as little as possible when driving.
- Adjust your driving style to the road and traffic conditions.

You could otherwise lose control of the vehicle, cause an accident and injure yourself or others.

Tyre pressure monitor

Important safety notes

⚠ WARNING

You should always adjust the tyre pressures according to the vehicle load. The tyre pressure monitor does not warn you if a tyre pressure is incorrect. It only warns you if the tyre pressure drops significantly below the reference tyre pressure stored after the tyre pressure is set during calibration. You must refer to the table inside the fuel filler flap to decide whether the tyre pressure needs to be corrected.

In particular, the driver is responsible for adjusting the tyre pressures accordingly if the vehicle payload is increased.

Make sure that you always recalibrate the tyre pressure monitor after you have changed the tyre pressure. The tyre pressure monitor is not able to warn you of a sudden loss of pressure, e.g. following penetration by a foreign object. In this event, brake the vehicle until it comes to a standstill. Do not carry out any sudden steering manoeuvres.

⚠ WARNING

The tyre pressure monitor can only give reliable warnings if you have set the correct tyre pressure.

If an incorrect tyre pressure is set, these incorrect values will be monitored.

A tyre with insufficient pressure will cause vehicle instability while driving, increasing the risk of an accident.

The tyre pressure monitor only functions when the relevant wheel electronics are fitted in all wheels. They monitor the pressure in all four tyres that you set when you activate the tyre pressure monitor. The tyre pressure monitor warns you if the pressure drops significantly in one or more of the tyres.

ⓘ If radio transmitting equipment (e.g. wireless headphones, two-way radios) is operated inside the vehicle or in the vicinity of the vehicle, this can interfere with the operation of the tyre pressure monitor.

Calling up tyre pressure using the on-board computer

Vehicles with steering-wheel buttons

Using the steering wheel buttons

- ▶ Turn the key to position **2** in the ignition lock.
- ▶ Press the ⌂ or ⌂ button repeatedly until the standard display is shown (▷ page 85).
- ▶ Press the ⌂ or ⌂ button repeatedly until the current tyre pressure for the individual tyres is displayed.



If the vehicle has been parked for more than 20 minutes or you have not then driven faster than 30 km/h, you will see the following message:

`Tyre press. displayed after driving for several minutes`

ⓘ The tyre pressure values indicated by the on-board computer may differ from those measured at a filling station using a pressure gauge. The on-board computer will generally give you a more exact value.

Tyre pressure loss warning system

Vehicles without steering wheel buttons

The ⌂ tyre pressure loss warning lamp in the instrument cluster comes on if the pressure of one or more tyres drops significantly (▷ page 227).

Vehicles with steering-wheel buttons

If the pressure of one or more tyres drops considerably, a message will be displayed. The tyre pressure loss warning lamp in the instrument cluster comes on (▷ page 227).

The tyre pressure is shown in two red rectangles. The pressure of the tyre concerned is shown in one of the two rectangles (▷ page 231). A warning tone also sounds.

Reactivating the tyre pressure monitor

Vehicles without steering wheel buttons

In most cases, the tyre pressure monitor detects the new reference values automatically, e.g. after you have:

- changed the tyre pressure
- changed wheels or tyres
- fitted new wheels or tyres

You can also determine new reference values manually in the manner described below.

▶ Make sure that the tyre pressure of all four wheels is set correctly.
Observe the tyre pressure table inside the fuel filler flap and the notes in the "Tyre pressure" section (▷ page 290).

▶ Turn the key to position **2** in the ignition lock.

▶ Press the Ⓜ menu button on the instrument cluster repeatedly until the following message is displayed:
`+CAL- TPMS`

▶ Press the ⊕ button on the instrument cluster.
The following message is displayed:
`OK TPMS`
The tyre pressure monitor activation process has begun. The tyre pressures measured for the individual wheels are stored as the new reference values, provided that the tyre pressure monitor considers them to be plausible.

If you wish to cancel the activation process:

▶ Press the ⊖ button or the Ⓜ menu button in the instrument cluster.
The activation process is cancelled automatically if 30 seconds elapse with no input.

Vehicles with steering-wheel buttons

In most cases, the tyre pressure monitor detects the new reference values automatically, e.g. after you have:

- changed the tyre pressure
- changed wheels or tyres
- fitted new wheels or tyres

You can also determine new reference values manually in the manner described below.

▶ Make sure that the tyre pressure of all four wheels is set correctly.
Observe the tyre pressure table inside the fuel filler flap and the notes in the "Tyre pressure" section (▷ page 290).

▶ Turn the key to position **2** in the ignition lock.

▶ Press the button or button on the steering wheel repeatedly until the standard display appears (▷ page 85).

▶ Press the button or button on the steering wheel repeatedly until the current pressure of the individual tyres is displayed, or the display shows the following message:
`Tyre press. displayed after driving for several minutes`

▶ Press the ⓪ reset button on the instrument cluster.
The following message is displayed:
`Monitor current tyre pressure?`

▶ Press the + menu button on the steering wheel.
The following message is displayed:
`Tyre press. monitor reactivated`
The tyre pressure monitor activation process has begun. The tyre pressures measured for the individual wheels are stored as

the new reference values, provided that the tyre pressure monitor considers them to be plausible.

If you wish to cancel the activation process:

▶ Press the — menu button on the steering wheel.

Power take-off

! Please observe the following notes:

- if a heavy load is placed on the power take-off (e.g. due to a high power draw at a high outside temperature), the temperature of the transmission oil may rise to an impermissible level.

  Operate the power take-off for approximately five to ten minutes at regular intervals under partial load.
- only engage the power take-off when the vehicle is stationary and the transmission is in neutral.
- make sure that the engine speed does not rise above 2500 rpm during operation.
- on vehicles with a shift lock, the manual transmission is locked when the power take-off is engaged.
- on vehicles without a shift lock, you can engage first or second gear after engaging the power take-off and then drive the vehicle.

  Do not change gear when driving the vehicle with the power take-off engaged. You should therefore only drive in first or second gear, depending on the road speed desired.

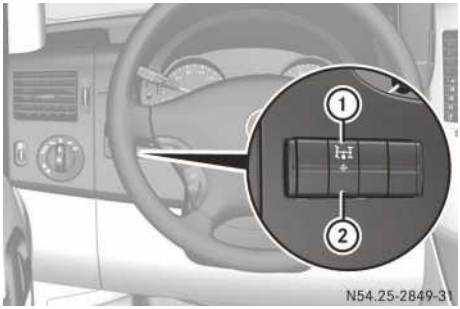

▶ **To engage:** stop the vehicle and engage neutral.

▶ Depress the clutch pedal.

▶ Wait approximately five seconds and then press upper section ① of the switch with the engine running.
The indicator lamp in the switch comes on.

▶ Release the clutch pedal.

▶ **To disengage:** stop the vehicle and engage neutral.

▶ Depress the clutch pedal.

▶ Wait approximately five seconds and then press lower section ② of the switch with the engine running.
The indicator lamp in the switch goes out.

▶ Release the clutch pedal.

On vehicles with a working speed governor (ADR), the engine speed automatically increases to a preset or adjustable speed (▷ page 142) – the constant engine speed.

Vehicles without steering wheel buttons:

The ADR indicator lamp in the instrument cluster lights up.

Vehicles with steering wheel buttons:

The `Operating speed governor active` message appears in the display.

ADR (working speed governor)

General notes

When activated, ADR automatically increases the engine speed to a preset or adjustable speed (▷ page 142).

After a cold start, the idling speed of the engine is increased automatically. If the preset working speed is lower than the increased idling speed, the working speed is only reached once the engine has completed the warm-up phase.

It is only possible to activate ADR with the vehicle stationary and the parking brake applied.

On vehicles with automatic transmission, the selector lever must be in position **P**.

Activating/deactivating ADR

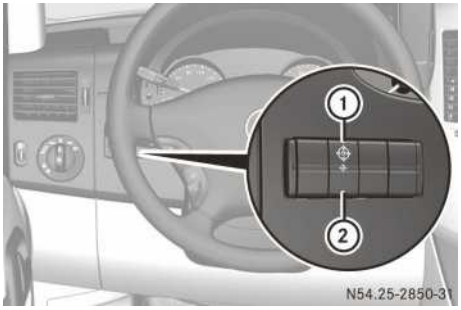

- **To activate:** press upper section ① of the switch while the engine is running.
  The indicator lamp in the switch comes on.
  Vehicles without steering wheel buttons:
  The ADR indicator lamp in the instrument cluster lights up.
  Vehicles with steering wheel buttons:
  The `Operating speed governor active` message appears in the display.
- **To deactivate:** press lower section ② of the switch while the engine is running.
  The indicator lamp in the switch goes out.

ADR is automatically deactivated when:

- you release the parking brake
- the brake pedal is depressed
- the vehicle moves
- the control unit detects a malfunction

Setting the working speed

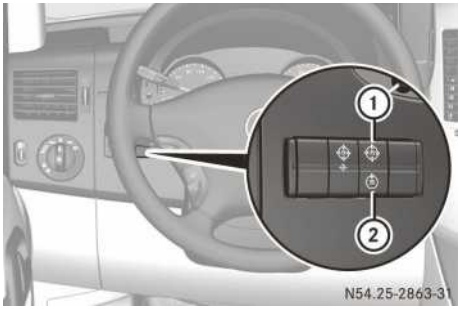

- Engage the power take-off (▷ page 141) or activate ADR (▷ page 142).
- **To increase:** press upper section ① of the switch.
- **To decrease:** press lower section ② of the switch.

On vehicles with cruise control, you can use the cruise control lever to increase or decrease the engine speed in the same way as for the road speed. Set the speed using the cruise control lever (▷ page 147).

After a cold start, the idling speed of the engine is increased automatically.

You can only reduce the working speed to the level of the current idling speed.

ECO-Start for Euro 4 engine

General notes

Activate ECO Start during extended waiting periods, e.g. in urban traffic or when making deliveries. ECO Start will then automatically switch the engine off and restart it again.

Environmental note

Using ECO-Start reduces fuel consumption and protects the environment.

When switched on, ECO Start is activated when a minimum speed of approximately 2 km/h is exceeded after pulling away.

Stopping the engine automatically

ECO Start switches off the engine automatically if all of the following conditions are fulfilled for at least two seconds:

- the engine is running at idling speed.
- the vehicle is stationary.
- the transmission is in neutral.
- the clutch pedal is not being depressed.
- the coolant temperature is above 40 °C.
- the outside temperature is above 0 °C.
- the charge status of the battery is sufficient.

ⓘ Variable Speedtronic is also deactivated when ECO Start switches off the engine automatically. The corresponding display message is cleared. If required, it will then be necessary to reactivate variable Speedtronic after the engine has automatically restarted.

Vehicles without steering wheel buttons:

The ECO indicator lamp in the instrument cluster:

- comes on if the engine has been switched off automatically
- flashes if you depress the clutch pedal and all other conditions for switching off the engine automatically are fulfilled
- lights up while the vehicle is in motion if the automatic engine start-stop is switched off due to insufficient battery charge

Vehicles with steering wheel buttons:

In the display, the ECO start/stop active message appears if:

- the engine has been switched off automatically
- you depress the clutch pedal and all other conditions for switching off the engine automatically are fulfilled

Starting the engine automatically

After the engine has been switched off automatically, ECO Start starts the engine if the following conditions are fulfilled:

- you have shifted the transmission into neutral.
- you are depressing the clutch pedal or the vehicle has started to roll.

ⓘ If you engaged a gear after the engine was switched off automatically, you must depress the clutch pedal as far as it will go in order for the engine to restart automatically.

Activating/deactivating ECO Start

⚠ WARNING

When ECO-Start is activated, the engine may be started inadvertently, e.g. if the clutch pedal is depressed unintentionally.

For this reason, you must deactivate ECO-Start before work is carried out on the engine. This prevents the engine from being inadvertently started by ECO-Start while work is being carried out. You could otherwise injure yourself on moving engine parts.

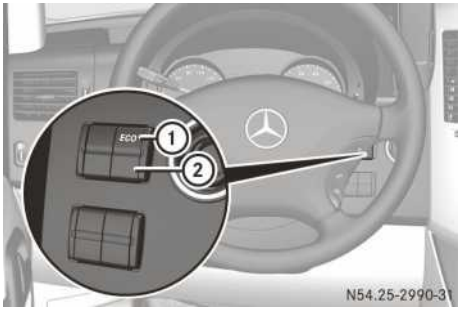

▶ **To activate:** press upper section ① of the ECO switch while the engine is running. ECO Start is active after you pull away.

On vehicles without steering wheel buttons, the ECO indicator lamp in the instrument cluster lights up briefly after the system is switched on.

On vehicles with steering wheel buttons, the ECO start/stop active message appears in the display.

▶ **To deactivate:** press lower section ② of the ECO switch.

ECO-Start for Euro 5 engine

General notes

ECO-Start is activated automatically each time the engine is started and the indicator lamp in the ECO button lights up. ECO-Start switches the engine off automatically as soon as you stop the vehicle. It restarts the engine as soon as you depress the clutch pedal.

Conditions for automatic engine switch-off

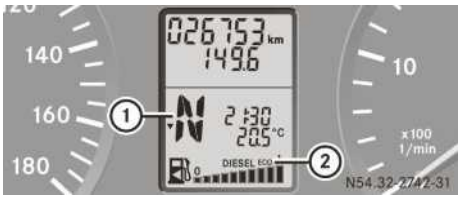

Messages in the display (example: vehicles without steering-wheel buttons)

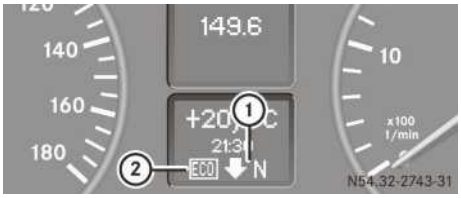

Messages in the display (example: vehicles with steering-wheel buttons)

When ECO ② is shown in the display, ECO-Start is operational. The following conditions must be fulfilled:

- the indicator lamp in the ECO button is on.
- the engine has reached its operating temperature.
- the bonnet is closed.
- you have shifted up a gear since pulling away.
- the outside temperature is above 0 °C.
- the charge status of the battery is sufficient.

ECO-Start switches the engine off automatically when:

- the vehicle is stationary.
- you have engaged neutral **N**.
- the clutch pedal is not depressed.

ⓘ When ECO-Start is operational and you stop the vehicle, gearshift recommendation to engage neutral ① is shown in the display.

Conditions for automatic engine start

ECO-Start starts the engine, provided it has been switched off automatically, when:

- you depress the clutch pedal.
- the vehicle begins to roll.

The automatic engine start is blocked if you engage a gear without depressing the clutch pedal. To start the engine automatically, depress the clutch pedal to the stop.

If the battery charge status is no longer sufficient and ECO is flashing in the display, fully depress the clutch pedal.

Activating/deactivating ECO-Start



⚠ WARNING

When ECO-Start is activated, the engine may be started inadvertently, e.g. if the clutch pedal is depressed unintentionally.

For this reason, you must deactivate ECO-Start before work is carried out on the engine. This prevents the engine from being inadvertently started by ECO-Start while work is being carried out. You could otherwise injure yourself on moving engine parts.

▶ Press button ① when the engine is running.
If the indicator lamp in button ① is off, ECO-Start is deactivated. The engine will then not be switched off automatically when the vehicle stops.

If you press button ① after the engine is switched off automatically, ECO-Start is deactivated. However, you can start the engine once more by depressing the clutch pedal.

If the indicator lamp in button ① does not light up after the engine is started, ECO-Start is malfunctioning and cannot be activated.

Driving systems

Overview

The following pages describe driving systems that may be a component in your vehicle:

- Cruise control (▷ page 145) and SPEEDTRONIC (▷ page 148), which you can use to control the speed of your vehicle
- PARKTRONIC (▷ page 151) and reversing camera (▷ page 153) which assists you with parking and manoeuvring

The ABS, BAS and EBD driving safety systems are described in the "Braking" section (▷ page 129).

The ASR, ESP® and 4ETS driving safety systems, as well as the starting-off aid and the tyre pressure monitor, are described in the "Operating the vehicle" section (▷ page 134).

Cruise control

Important safety information

Cruise control maintains the speed of the vehicle for you.

⚠ WARNING

Cruise control is unable to take account of road and traffic conditions.

Always pay attention to the traffic conditions, even when cruise control is activated.

Cruise control is only an aid designed to assist driving. You are always responsible for the vehicle's speed and for braking in good time.

If there is a change of drivers, make sure that you inform the new driver about the set cruise speed. Otherwise, sudden acceleration or braking could endanger you or others.

⚠ WARNING

Do not use cruise control

- in traffic conditions that do not allow you to drive at a constant speed (e.g. heavy traffic or winding roads). You may otherwise cause an accident.
- on slippery roads. The drive wheels may lose their grip when braking or accelerating and the vehicle may skid.
- when there is low visibility, e.g. due to fog, heavy rain or snow.

Use cruise control if road and traffic conditions make it appropriate to maintain a steady speed for a prolonged period. You can set any speed from 30 km/h upwards in increments of 1 km/h.

ⓘ If you have set mph as the units for the digital speedometer (▷ page 89), you can set any speed from 20 mph upwards in increments of 1 mph.

Cruise control may not be able to maintain the stored speed on uphill or downhill gradi-

ents. If the gradient evens out and the vehicle's speed does not fall below 30 km/h, the stored speed is resumed.

Cruise control lever

You can operate cruise control and variable SPEEDTRONIC with the cruise control lever.

The cruise control lever is the uppermost lever on the left of the steering column.

The LIM indicator lamp in the cruise control lever indicates which system you have selected.

- LIM indicator lamp off:
  Cruise control is selected.
- LIM indicator lamp on:
  Variable SPEEDTRONIC is selected.

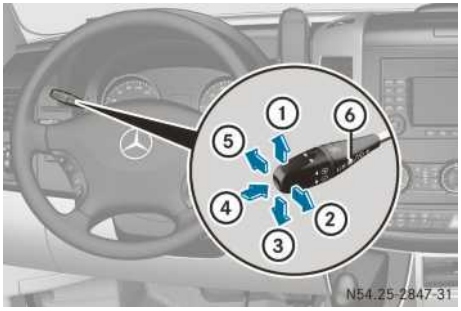

① To store the current speed or a higher speed
② To resume the last speed stored
③ To store the current speed or a lower speed
④ To switch between cruise control and variable SPEEDTRONIC
⑤ To deactivate cruise control
⑥ LIM indicator lamp

Selecting cruise control

▶ Check whether LIM indicator lamp ⑥ is off.
If it is, cruise control is already selected.
If it is not, press the cruise control lever in the direction of arrow ④.
LIM indicator lamp ⑥ in the cruise control lever goes off. Cruise control is selected.

Storing the current speed

▶ Accelerate/decelerate the vehicle to the speed desired above 30 km/h.
▶ Briefly push the cruise control lever up ① or down ③.
▶ Release the accelerator pedal.
Cruise control is activated. The current speed is stored.

ⓘ Gearshift indicator for vehicles with manual transmission:

- always drive at an adequate, but not excessive engine speed.
- change gear in good time, particularly on steep uphill gradients.
- do not change down several gears at a time.
- after changing gear, depress the accelerator pedal gently to increase the smoothness of the gear change.
- cruise control is deactivated if you depress the clutch pedal for longer than six seconds.
- if you shift into neutral and release the clutch pedal, the engine speed can increase considerably. Deactivate cruise control beforehand.

You cannot activate cruise control if:

- you are driving slower than 30 km/h.
- you depress the brake or clutch pedal.
- you apply the parking brake and the (P) PARK indicator lamp in the instrument cluster lights up.

ⓘ Other drive and brake systems not described in these Operating Instructions, such as a retarder, may affect cruise control. You can find information on this in the separate operating instructions provided by the body manufacturer.

Resuming the stored speed

⚠ WARNING

Only call up a stored speed if you know what that speed is and if it is suitable for the current traffic and driving situation. You can otherwise endanger yourself or others by unintentionally triggering sudden acceleration or braking.

- ▶ Briefly pull the cruise control lever in the direction of arrow ②.
- ▶ Release the accelerator pedal.
  Cruise control is activated and adjusts the vehicle's speed to the last speed stored.

ⓘ When you first move the cruise control lever in the direction of arrow ② after starting the engine, cruise control is activated and the current road speed is stored.

Setting the speed

⚠ WARNING

The rate at which you increase the speed in increments of 1 km/h may be faster than your vehicle is able to accelerate. Your vehicle may then continue to accelerate up to the newly set speed even after you have released the cruise control lever.

Only increase the speed as the prevailing conditions permit. Sudden acceleration could otherwise endanger you and others.

- ▶ Briefly push the cruise control lever upwards ① to increase the speed or downwards ③ to reduce the speed.
  The last speed stored is increased/reduced in increments of 1 km/h.

or

- ▶ Press and hold the cruise control lever up ① or down ③ until the desired speed has been reached.
- ▶ Release the cruise control lever.
  The current speed is stored.

ⓘ Cruise control is not deactivated if you depress the accelerator pedal. If you accelerate briefly, e.g. to overtake, and then ease off the accelerator pedal again, cruise control adjusts the vehicle's speed to the last speed stored.

Deactivating cruise control

There are various ways to deactivate cruise control:

- ▶ Briefly push the cruise control lever forwards ⑤.

or

- ▶ Apply the brakes.

or

- ▶ Briefly push the cruise control lever in the direction of arrow ④.
  Variable SPEEDTRONIC is selected. LIM indicator lamp ⑥ in the cruise control lever lights up.

The last speed set remains stored.

ⓘ The last speed set is deleted when you switch off the engine.

ⓘ Cruise control is deactivated automatically when:

- you apply the brakes.
- you apply the parking brake and the (P) PARK indicator lamp in the instrument cluster lights up.
- you are driving slower than 30 km/h.
- ESP® or ASR intervenes.
- you depress the clutch pedal for longer than six seconds while the vehicle is in motion.
- you shift the automatic transmission to neutral position **N** while the vehicle is in motion.
- there is a malfunction in the ESP® or ABS system.

SPEEDTRONIC

Important safety information

⚠ WARNING

SPEEDTRONIC is only an aid designed to assist driving. You are responsible for the vehicle's speed and for braking in good time.

SPEEDTRONIC is used to ensure that you do not exceed a certain set speed.

You can set a variable or permanent limit speed:

- **variable**, for speed restrictions, for example in built-up areas
- **permanent**, for long-term speed restrictions, e.g. when driving on winter tyres (▷ page 150)

ⓘ The speed shown in the speedometer may differ slightly from the stored limit speed.

Variable SPEEDTRONIC

General notes

You can operate cruise control and variable SPEEDTRONIC with the cruise control lever.

The cruise control lever is the uppermost lever on the left of the steering column.

The LIM indicator lamp in the cruise control lever indicates which system you have selected.

- LIM indicator lamp off:

  Cruise control is selected.
- LIM indicator lamp on:

  Variable SPEEDTRONIC is selected.

When the engine is running, you can use the cruise control lever to store any speed above 30km/h as the limit speed. You can adjust the limit speed in increments of 1 km/h and 10 km/h.

ⓘ If you have set mph as the unit for the digital speedometer (▷ page 89), you can set any speed above 20 mph as the limit speed. You can adjust the limit speed in increments of 1 mph and 5 mph.

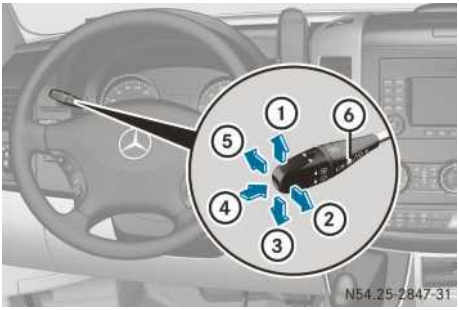

① To store the current speed or a higher speed

② To call up the last stored speed or to increase the speed in increments of 1 km/h

③ To store the current speed or a lower speed

④ To switch between cruise control and variable SPEEDTRONIC

⑤ To deactivate variable SPEEDTRONIC

⑥ LIM indicator lamp

Selecting variable SPEEDTRONIC

▶ Check whether LIM indicator lamp ⑥ is on.

If it is on, variable SPEEDTRONIC is already selected.

If it is not, press the cruise control lever in the direction of arrow ④.

LIM indicator lamp ⑥ in the cruise control lever is on.

Variable SPEEDTRONIC is selected.

Storing the current speed

▶ Briefly push the cruise control lever up ① or down ③.

Variable SPEEDTRONIC is activated. The current speed is stored and shown in the display as the limit speed.

⚠ WARNING

If there is a change of drivers, advise the new driver of the limit speed that is stored.

Only use variable SPEEDTRONIC if you will not have to suddenly drive faster than the limit

speed allows. You could otherwise cause an accident.

You can only exceed the stored speed limit if you:

- deactivate variable SPEEDTRONIC using the cruise control lever
- depress the accelerator pedal beyond the pressure point (kickdown with automatic transmission). The speed you are actually driving must not deviate from the stored limit speed by more than 20 km/h.

You cannot deactivate variable SPEEDTRONIC by braking.

Resuming the stored speed

▶ Briefly pull the cruise control lever in the direction of arrow ②.
Variable SPEEDTRONIC is activated and the limit speed is shown in the display.

ⓘ Variable SPEEDTRONIC is activated the first time you move the cruise control lever in the direction of arrow ② after starting the engine. The current speed is stored.

Adjusting the speed in increments of 1 km/h

▶ Pull the cruise control lever in the direction of arrow ②.
The limit speed is increased in increments of 1 km/h and shown in the display.

▶ Release the cruise control lever.
The new limit speed is stored.

Adjusting the speed in increments of 10 km/h

▶ To increase the limit speed, press the cruise control lever upwards ①.

or

▶ To reduce the limit speed, press the cruise control lever downwards ③.
The last limit speed stored is increased or reduced to the next multiple of ten and shown in the display.

▶ Release the cruise control lever.
The new limit speed is stored.

Limit speed display

Vehicles with steering wheel buttons:

After switching on and when setting the limit speed, the Speed limit message and the stored speed are shown in the upper part of the display for approximately five seconds. The stored speed is then shown highlighted in the lower section of the display.

Vehicles without steering wheel buttons:

You will see the ... LIM km/h message and the stored speed in the display (▷ page 81).

ⓘ When you call up or change the stored speed, the display flashes if your current speed is higher than the stored value.

ⓘ The limit speed may be exceeded on downhill gradients even if variable SPEEDTRONIC is activated.

If the vehicle exceeds the set limit speed, the ... Speed limit km/h or ... LIM km/h message is displayed and the stored speed flashes in the display. If the vehicle continues to accelerate, a warning tone also sounds three times.

The Speed limit ... km/h exceeded message is then displayed for approximately five seconds on vehicles with steering wheel buttons.

Brake manually if necessary.

Deactivating variable SPEEDTRONIC

ⓘ You cannot deactivate SPEEDTRONIC by braking.

There are various ways to deactivate variable SPEEDTRONIC:

▶ Briefly push the cruise control lever forwards ⑤.

or

▶ Briefly push the cruise control lever in the direction of arrow ④.
Cruise control (▷ page 145) is selected. LIM indicator lamp ⑥ in the cruise control lever goes out.

The last limit speed set remains stored.

ⓘ The last limit speed stored is deleted when you switch off the engine.

ⓘ Variable SPEEDTRONIC is deactivated automatically if:

- on vehicles with manual transmission, you shift to a higher gear and as a result the engine speed is too low.
- you depress the accelerator pedal beyond the pressure point (kickdown with automatic transmission). The speed you are actually driving must not deviate from the stored limit speed by more than 20 km/h.
- on vehicles with the Euro 4 engine, ECO-Start automatically switches off the engine (▷ page 142).
- the switchable all-wheel drive is activated/deactivated (▷ page 136).
- there is a malfunction in the ESP® or ABS system.

Permanent SPEEDTRONIC

ⓘ Permanent SPEEDTRONIC is only available in certain countries.

The speed can be permanently set (e.g. for driving on winter tyres) to a value between 100 km/h and 160 km/h for:

- vehicles without steering wheel buttons – at a qualified specialist workshop
- vehicles with steering wheel buttons – by using the on-board computer when the vehicle is stationary

Permanent SPEEDTRONIC remains active even if variable SPEEDTRONIC is deactivated.

You cannot exceed the set limit speed, even if you depress the accelerator pedal beyond the pressure point (kickdown).

If you accelerate the vehicle using the accelerator pedal, the Speed limit Winter tyres... km/h or ... LIM km/h message is shown in the display shortly before the set limit speed is reached.

Permanent SPEEDTRONIC controls the speed and the vehicle stops accelerating. You should then ease off the accelerator pedal accordingly.

ⓘ If there is a malfunction in the ESP® or ABS system, permanent SPEEDTRONIC is deactivated for the duration of the malfunction.

ⓘ It is possible that the limit speed is exceeded on steep downhill gradients even if permanent SPEEDTRONIC is activated.

If the vehicle exceeds the set limit speed, the Speed limit Winter tyres ... km/h exceeded message or ... LIM km/h message is displayed and the stored speed flashes in the display. If the vehicle continues to accelerate, a warning tone also sounds three times.

On vehicles with steering wheel buttons, the Speed limit Winter tyres ... km/h exceeded message is shown for approximately five seconds.

Brake manually if necessary.

Setting permanent SPEEDTRONIC

Using the steering wheel buttons.

▶ Turn the key to position **2** in the ignition lock.

▶ Press the ⟲ or ⟳ button repeatedly until the Settings menu appears in the display.

▶ Press ⌂ to switch to the submenu selection.

▶ Press + or − to select the Vehicle submenu.

▶ Press ⌂ to select the Limit speed function.
The selection marker is on the current setting.



▶ Press the + or − button to select the desired setting in increments of ten (160 km/h to 100 km/h).
The Unlimited setting means that permanent SPEEDTRONIC is deactivated.

PTS (PARKTRONIC)

Important safety information

⚠ WARNING

PARKTRONIC is only an aid and may not detect all obstacles. It is not a substitute for attentive driving.

You are always responsible for safety and must continue to pay attention to your immediate surroundings when parking and manoeuvring. You could otherwise endanger yourself and others.

⚠ WARNING

Make sure that no persons or animals are in the manoeuvring range. Otherwise, they could be injured.

PARKTRONIC is an electronic parking aid. PARKTRONIC indicates visually and audibly the distance between your vehicle and an object.

Your vehicle features two separate sound emitters with different frequencies for the warning tones. The warning ranges in front of and behind the vehicle are indicated by different warning tones.

PARKTRONIC is automatically activated when the key is turned to position **2** in the ignition lock and the parking brake is released.

On vehicles with automatic transmission, you must also move the selector lever to position **D**, **N** or **R**.

PARKTRONIC is deactivated at speeds above 18 km/h. PARKTRONIC is reactivated at speeds below 16 km/h.

PARKTRONIC monitors the area around your vehicle with sensors in the front and rear bumpers.

Range of the sensors

The sensors must be free of dirt, ice or slush. Otherwise, they cannot function correctly. Clean the sensors regularly, taking care not to scratch or damage them (▷ page 195).

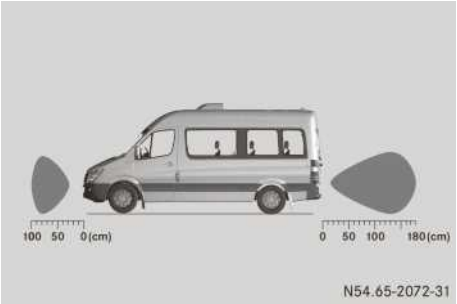

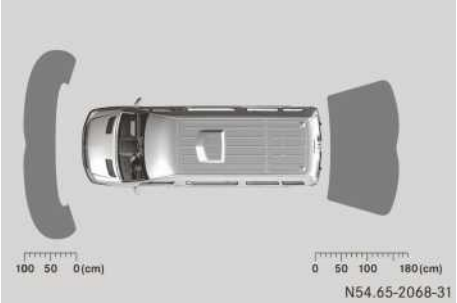

Front sensors	
Centre	Approximately 100 cm
Corners	Approximately 65 cm

Rear sensors	
Centre	Approximately 180 cm
Corners	Approximately 100 cm

Minimum distance	
Centre	Approximately 30 cm
Front corner sensors	Approximately 25 cm
Rear corner sensors	Approximately 30 cm

If an obstacle is within this range, all segments of the warning displays light up and you hear a warning tone. If the distance between the vehicle and the obstacle falls below the minimum range, it is possible that the distance may no longer be displayed.

! Pay particular attention to obstacles above or below the sensors when parking, such as flower pots or trailer towbars. PARKTRONIC does not detect such objects when they are in the immediate vicinity of the vehicle. You could damage the vehicle or objects.

PARKTRONIC can suffer interference from:

- ultrasonic sources such as a lorry's compressed-air brakes, an automatic car wash or a pneumatic drill
- attachments to the vehicle, e.g. rear mounted racks
- number plates (vehicle licence plates) that are not affixed flat against the bumper
- dirty or icy sensors

Warning displays

The warning displays show the distance between the sensor and the obstacle.

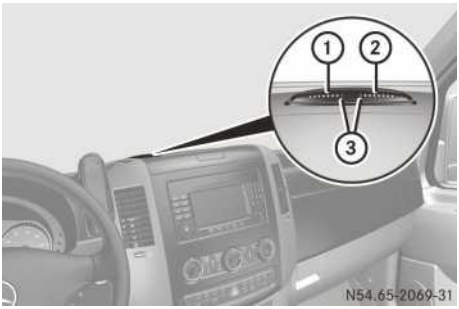

Warning display, front area

① Left-hand side of vehicle

② Right-hand side of vehicle

③ Segments

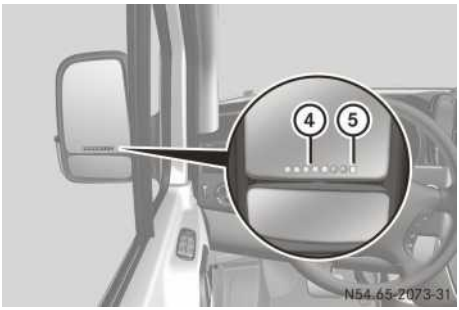

Warning display for the left-hand rear area in the left-hand exterior mirror

④ Warning display segments

⑤ Operational readiness segment

The warning display is divided into five yellow and two red segments for each side of the vehicle. PARKTRONIC is operational if yellow indicator segments ③ and ⑤ light up.

There is a malfunction if only the red segments of the warning display light up (▷ page 248).

The position of the gear lever or selector lever determines whether the front and/or rear area is monitored.

Transmission position	Monitoring
Forward gear or **D**	Front area
Reverse gear or **R** or **N**	Front and rear area
P	No areas activated

One or more segments light up as the vehicle approaches an obstacle, depending on the vehicle's distance from the obstacle.

From the:

- sixth segment, an intermittent warning tone sounds for approximately two seconds.
- seventh segment, a continuous warning tone sounds. You have reached the minimum distance.

Roll-back warning

PARKTRONIC automatically monitors the area behind the vehicle if the vehicle begins to roll backwards without reverse gear engaged, e.g. after stopping on an uphill gradient.

If PARKTRONIC recognises an obstacle at a distance of at most 80 cm, all the segments in the warning displays light up. A continuous warning tone also sounds as the vehicle approaches the obstacle and for a further two seconds after the vehicle has come to a halt.

Deactivating/activating PARKTRONIC

You can deactivate/activate PARKTRONIC manually.



▶ Press the ① button.
If PARKTRONIC is deactivated, the indicator lamp in the button lights up.

Trailer towing

PARKTRONIC is deactivated for the rear area when you establish an electrical connection between your vehicle and a trailer.

After uncoupling the trailer, unplug the 7-pin connector adapter from the socket (▷ page 184). Otherwise, PARKTRONIC remains deactivated for the rear area.

If the trailer coupling is detachable, remove it when it is no longer required. PARKTRONIC measures the minimum detection range to an obstacle from the bumper, not the ball coupling.

Reversing camera

Important safety information

⚠ WARNING

The reversing camera is merely an aid for parking, and may show obstacles out of perspective, incorrectly or may not show obstacles at all. This system does not relieve you of the need to pay attention.

The reversing camera cannot display all objects which are very close to and/or under the rear bumper. It does not warn you of collisions, persons or objects.

You are always responsible for safety and must continue to pay attention to your imme-

diate surroundings when parking and manoeuvring. This not only applies to the area behind the vehicle, but also to the areas in front of and to the sides of the vehicle.

Otherwise you may not notice people or objects and, by continuing to drive, injure somebody or cause damage to the objects or the vehicle. When parking, Mercedes-Benz recommends that you also always use PARKTRONIC.

⚠ WARNING

Make sure that no persons or animals are in the manoeuvring range. Otherwise, they could be injured.

⚠ WARNING

The function of the reversing camera may be partially or completely impaired in the following circumstances:

- if it is raining hard, snowing or foggy
- if you are parked somewhere very dark
- if the camera is exposed to very bright white light. White lines may appear on the display.
- if the area is illuminated with fluorescent lighting. The display may flicker.
- if the temperature changes very quickly, for example if you drive into a heated garage in the winter
- if the ambient temperature is very high
- if the camera lens is dirty or obstructed
- if the rear of the vehicle is damaged. In this case, have the position and setting checked at a specialist workshop.

The reversing camera is a visual parking aid. You can use the reversing camera in conjunction with COMAND or with a separate monitor on the stowage compartment on the centre console.

The reversing camera is activated when you engage reverse gear **R**.

The camera is in the middle of the roof above the third brake lamp (▷ page 195).



Monitor in the stowage space on the centre console

① Monitor for reversing camera

You will find information about cleaning the camera in the "Operation" section (▷ page 195).

Switching on the reversing camera

▶ Make sure that the ignition is switched on.

▶ Engage reverse gear **R**.
The reversing camera is switched on.

Using the monitor

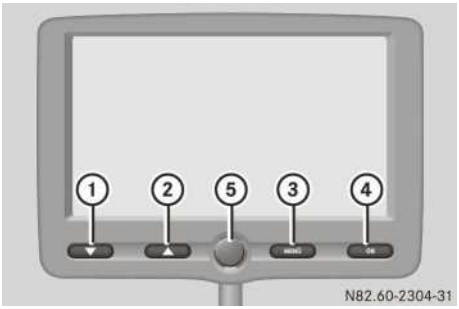

Monitor buttons

① ▼ Down button

② ▲ Up button

③ MENU Menu/Confirm button

④ ON Monitor on/off switch

⑤ Speaker cover

Switching on the monitor

You can switch on the monitor by:

- engaging reverse gear **R**

The reversing camera is activated. This then switches the monitor on.

- pressing the ON button

  The input for auxiliary equipment (AUX) on the monitor is activated.

If you have switched the monitor off using the ON button, you must press the ON button after engaging reverse gear **R**. Only then is the monitor switched on.



Input for auxiliary equipment (AUX)

If you engage reverse gear **R** while using auxiliary equipment, the monitor switches to the reversing camera.

After you disengage reverse gear **R**, the monitor shows the image from the reversing camera for another 15 seconds. The monitor then switches back to the signal from the auxiliary equipment (AUX).

Switching off the monitor

If the monitor was switched on by engaging reverse gear **R**, it switches off automatically 15 seconds after you disengage reverse gear **R**.

You can switch off the monitor by pressing the ON button. In this case, the following message is shown for seven seconds before it switches off.

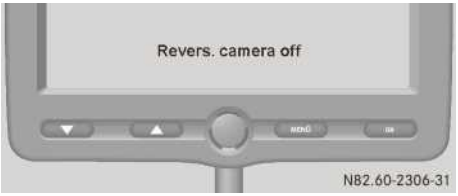

Menu system

Setting the volume

▶ Briefly press the ▼ or ▲ button.
The volume of the integrated loudspeaker is adjusted in increments.

The volume of the optional infrared headphones is adjusted on the headphones themselves.

▶ Press the MENU button to exit the volume adjustment.

If you do not press a button for seven seconds, the monitor switches off the volume adjustment.

Selecting the main menu

▶ Press the MENU button.
The menu selection for the main menu (menu level 1) is displayed.

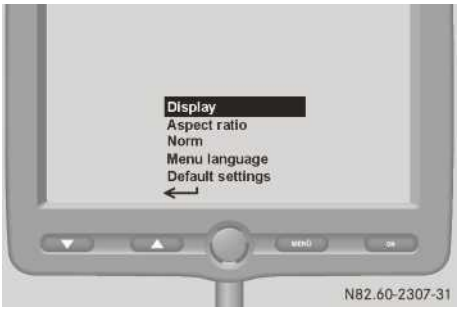

▶ Press the ▼ or ▲ button until the desired menu is highlighted.

▶ Press the MENU button.
The menu is selected.

You can select the following menus:

- Display (▷ page 156)
- Picture format (▷ page 157)
- Standard (▷ page 158)
- Menu language (▷ page 158)
- Factory setting (▷ page 159)
- Back ↵ (▷ page 156)

Skipping back a menu

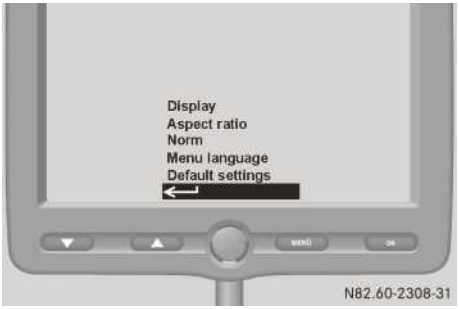

- ▶ Press the ▼ or ▲ button until the ↵ symbol is highlighted.
- ▶ Press the MENU button.
  The higher-level menu is displayed.

Display menu

You can customise the monitor display in the Display menu.

You can select the following submenus:

- Lighting (▷ page 156)
- Brightness (▷ page 156)
- Contrast (▷ page 157)
- Colour (▷ page 157)
- Tint
- Back ↵ (▷ page 156)

Lighting submenu

You can adjust the background illumination of the monitor in the Lighting submenu.

- ▶ Press the MENU button.
  The main menu (menu level 1) is displayed (▷ page 155).
- ▶ Press the ▼ or ▲ button until the Display menu is highlighted.
  The Display menu is selected.
- ▶ Press the MENU button.
  The submenus (menu level 2) are displayed.

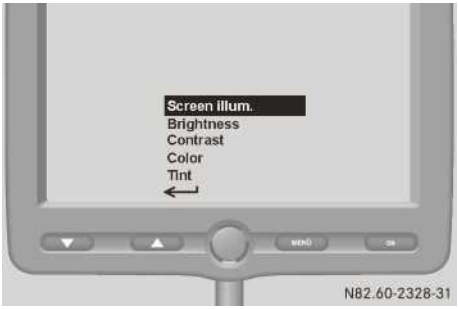

- ▶ Press the ▼ or ▲ button until the Lighting submenu is highlighted.
- ▶ Press the MENU button.
  The lighting setting is displayed.

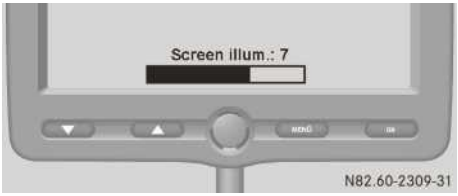

- ▶ Press the ▼ or ▲ button.
  The background lighting is adjusted in increments.
- ▶ Press the MENU button.
  The submenus (menu level 2) are displayed.

ⓘ If you do not press a button for seven seconds, the menu is automatically closed.

Brightness submenu

You can adjust the brightness of the monitor in the Brightness submenu.

- ▶ Press the MENU button.
  The main menu (menu level 1) is displayed (▷ page 155).
- ▶ Press the ▼ or ▲ button until the Display menu is highlighted.
  The Display menu is selected.
- ▶ Press the MENU button.
  The submenus (menu level 2) are displayed.
- ▶ Press the ▼ or ▲ button until the Brightness submenu is highlighted.

- ▶ Press the MENU button.
  The brightness setting is displayed.
- ▶ Press the ▼ or ▲ button.
  The brightness is adjusted in increments.
- ▶ Press the MENU button.
  The submenus (menu level 2) are displayed.

Contrast submenu

You can adjust the picture contrast of the monitor in the Contrast submenu.

- ▶ Press the MENU button.
  The main menu (menu level 1) is displayed (▷ page 155).
- ▶ Press the ▼ or ▲ button until the Display menu is highlighted.
  The Display menu is selected.
- ▶ Press the MENU button.
  The submenus (menu level 2) are displayed.
- ▶ Press the ▼ or ▲ button until the Contrast submenu is highlighted.
- ▶ Press the MENU button.
  The contrast setting is displayed.
- ▶ Press the ▼ or ▲ button.
  The contrast is adjusted in increments.
- ▶ Press the MENU button.
  The submenus (menu level 2) are displayed.

Colour submenu

You can adjust the colour setting of the monitor in the Colour submenu.

- ▶ Press the MENU button.
  The main menu (menu level 1) is displayed (▷ page 155).
- ▶ Press the ▼ or ▲ button until the Display menu is highlighted.
  The Display menu is selected.
- ▶ Press the MENU button.
  The submenus (menu level 2) are displayed.
- ▶ Press the ▼ or ▲ button until the Colour submenu is highlighted.
- ▶ Press the MENU button.
  The colour setting is displayed.
- ▶ Press the ▼ or ▲ button.
  The contrast is adjusted in increments.
- ▶ Press the MENU button.
  The submenus (menu level 2) are displayed.

Tint submenu (NTSC colour balance)

In the NTSC standard you can adjust the colour balance of the monitor in the TINT submenu.

- ▶ Press the MENU button.
  The main menu (menu level 1) is displayed (▷ page 155).
- ▶ Press the ▼ or ▲ button until the Display menu is highlighted.
  The Display menu is selected.
- ▶ Press the MENU button.
  The submenus (menu level 2) are displayed.
- ▶ Press the ▼ or ▲ button until the Tint submenu is highlighted.
- ▶ Press the MENU button.
  The colour balance setting is displayed.
- ▶ Press the ▼ or ▲ button.
  The colour balance is adjusted in increments.
- ▶ Press the MENU button.
  The submenus (menu level 2) are displayed.

Picture format menu

You can set the display format for the monitor in the Picture format menu.

- ▶ Press the MENU button.
  The main menu (menu level 1) is displayed (▷ page 155).
- ▶ Press the ▼ or ▲ button until the Picture format menu is highlighted.
- ▶ Press the MENU button.
  The submenu (menu level 2) is displayed.

ⓘ The current picture format is marked with the ▶ symbol.

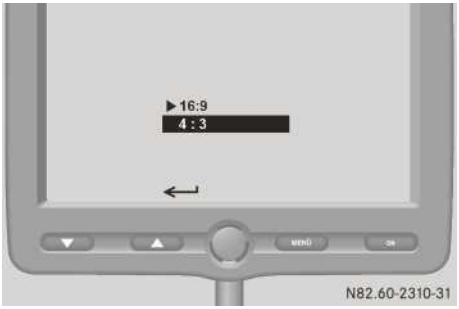

- ▶ Press the ▼ or ▲ button until the desired picture format highlighted.
- ▶ Press the MENU button.
  Your selected format is activated.

ⓘ The 16:9 format fills the entire monitor screen. The reversing camera generates a 16:9 format. Regular video signals usually require 4:3 format.

ⓘ If you select ↵ and press the MENU button, the monitor goes back to the main menu (menu level 1).

Standard menu

You can set the video standard for the monitor in the Standard menu.

- ▶ Press the MENU button.
  The main menu (menu level 1) is displayed (▷ page 155).
- ▶ Press the ▼ or ▲ button until the Standard menu is highlighted.
- ▶ Press the MENU button.
  The submenu (menu level 2) is displayed.

ⓘ The standard currently selected is marked with the ▶ symbol.

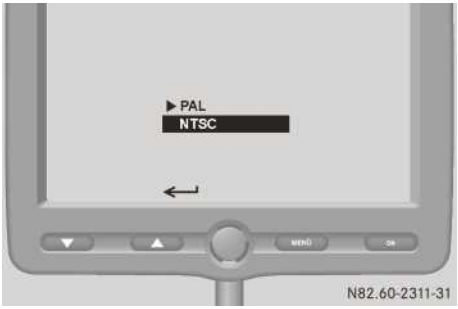

- ▶ Press the ▼ or ▲ button until the required standard is highlighted.
- ▶ Press the MENU button.
  The selected standard is activated.

ⓘ The video signal from the reversing camera uses the NTSC standard. Normal video signals generally use the PAL standard.

ⓘ If you select ↵ and press the MENU button, the monitor goes back to the main menu (menu level 1).

Menu language menu

You can set the language for the monitor menus in the Menu language menu.

- ▶ Press the MENU button.
  The main menu (menu level 1) is displayed (▷ page 155).
- ▶ Press the ▼ or ▲ button until the Menu language menu is highlighted.
- ▶ Press the MENU button.
  The submenu (menu level 2) is displayed.

ⓘ The current language is marked with the ▶ symbol.

- ▶ Press the ▼ or ▲ button until the desired language highlighted.
- ▶ Press the MENU button.
  The selected language is activated.

ⓘ If you select ↵ and press the MENU button, the monitor goes back to the main menu (menu level 1).

Factory settings menu

You can reset the monitor to the factory settings in the Factory setting menu.

- ▶ Press the MENU button.
  The main menu (menu level 1) is displayed (▷ page 155).
- ▶ Press the ▼ or ▲ button until the Factory settings menu is highlighted.
- ▶ Press the MENU button.
  The monitor displays the following message:



- ▶ Press the ▼ or ▲ button until the desired setting is highlighted.
- **Yes**: all settings are overwritten with the factory settings.
- ↵: return to the main menu without accepting the factory settings.

ⓘ If you select ↵ and press the MENU button, the monitor goes back to the main menu (menu level 1).

Switching off the monitor while driving

If you drive faster than 10 km/h, the monitor switches off for safety reasons.

You will see the following message for seven seconds until the monitor switches off.

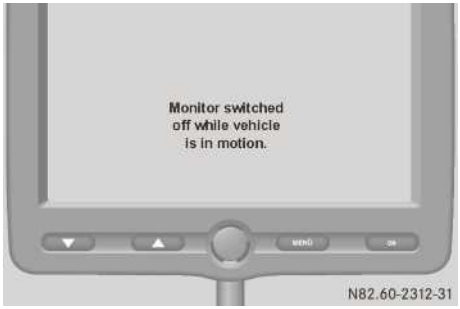

If the speed falls below 8 km/h, the monitor switches on again.

Level control

The level of the vehicle depends on vehicle load and the load distribution. On vehicles with an air-sprung rear axle, ENR compensates the level between front and rear axle automatically. The vehicle level is always maintained at the normal level, regardless of vehicle load. Driving dynamics remain unaffected.

Automatic mode can be deactivated when the vehicle is stationary and the vehicle level can be raised or lowered manually, e.g. for manoeuvring or loading/unloading. When working on the vehicle or changing a wheel, you can deactivate ENR.

If you drive at speeds of 10 km/h or more, automatic mode and ENR are reactivated automatically.

⚠ **WARNING**

If you park the vehicle and leave the ignition switched on, ENR remains active. If the vehicle is raised for maintenance work or to change a wheel, ENR attempts to compensate the vehicle level. This may cause the vehicle, for example, to slide off the jack.

To reduce the risk of severe or even fatal injuries or to avoid damaging the vehicle, either remove the key from the ignition lock or switch off ENR before beginning work on the vehicle.

If the ENR compressor threatens to overheat, e.g. due to repeated raising or lowering within a short period, ENR is automatically deactivated (play protection). You can raise or lower the vehicle again after approximately one minute.

If the indicator lamp in the instrument cluster flashes rapidly during the journey or the ENR Warning! Vehicle height warning message appears in the display, the vehicle level is too high or too low. ENR then sets the vehicle level back to normal level as soon as possible.

WARNING

If during the journey, the indicator lamp in the instrument cluster flashes or a corresponding warning message appears in the display, the vehicle level is either too high or too low. The vehicle driving and steering characteristics are changed noticeably. At a low vehicle level, the chassis can be damaged. Drive on with care, until the indicator lamp in the instrument cluster or warning message in the display goes out. Only then is the vehicle at normal level. You could otherwise endanger yourself and others.

If the indicator lamp in the instrument cluster lights up when you are driving (▷ page 228) or the ENR not activated warning message appears in the display (▷ page 238), ENR is malfunctioning.

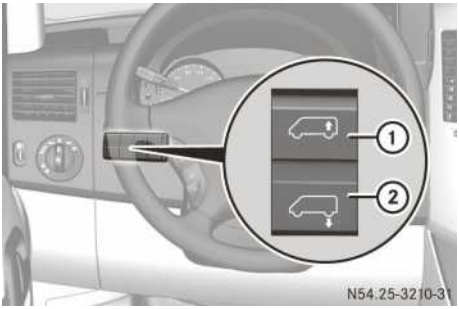

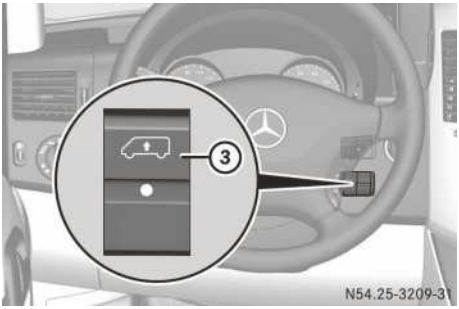

① To raise the vehicle level
② To lower the vehicle level
③ To switch ENR on/off

Raising/lowering the vehicle level

WARNING

Make sure that nobody is near the wheel arch or vehicle underside when you make a change to the vehicle level. Otherwise, you or others may be trapped.

- ▶ Stop the vehicle, leaving the ignition switched on.
- ▶ Press and hold the or button for approximately two seconds.
  Automatic mode is deactivated. The indicator lamp in the instrument cluster flashes or the ENR manual mode message appears in the display.

- Press the [button] or [button] button until the vehicle reaches the desired position.
- **To raise to normal level:** press the [button] button briefly.
  ENR automatically raises the vehicle to the normal level. To stop the movement, press the [button] button briefly.
- **To activate automatic mode:** press the [button] button briefly.

or

- Drive faster than 10 km/h.
  ENR sets the vehicle level automatically. The [indicator] indicator lamp in the instrument cluster or the display message goes out.

Switching ENR on/off

- Park the vehicle, leaving the ignition switched on.

ENR automatic mode must be activated (▷ page 161).

- **To deactivate:** press and hold the [button] button for approximately two seconds. The indicator lamp in the [button] button lights up. Additionally the [indicator] indicator lamp in the instrument cluster lights up or the ENR not activated message appears in the display.
- **To deactivate:** press and hold the [button] button again for approximately two seconds.

or

- Drive faster than 10 km/h.
  ENR sets the vehicle level automatically. The indicator lamp in the [button] button and the [indicator] indicator lamp in the instrument cluster or display message goes out.

Features

Ashtray

Ashtray in the centre console

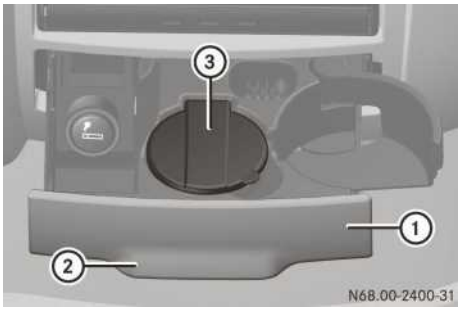

Ashtray in the ashtray compartment

- Pull ashtray compartment ① out by recess ②.
- **To open:** fold cover ③ upwards.
- **To remove the insert:** hold the ashtray by the recesses on the left and right and pull the insert out to empty it.
- **To replace the insert:** press it down into the holder as shown.
  Make sure that the insert is inserted correctly. Otherwise you will not be able to close the ashtray compartment ① afterwards.

Ashtrays in the passenger compartment

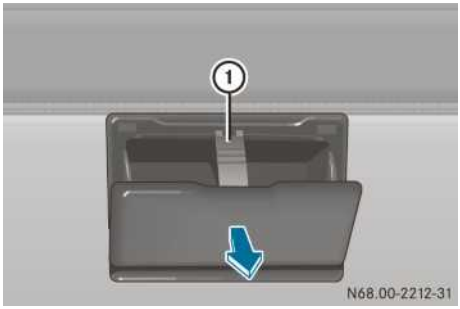

Ashtrays located in the side trim on the left and right-hand sides

- ▶ **To open:** fold out the ashtray.
- ▶ **To remove the insert:** press retaining clip ① down and remove the ashtray from the trim.
- ▶ **To replace the insert:** insert the ashtray down into the trim and close it.

Cigarette lighter

⚠ WARNING

Only hold the hot cigarette lighter by its knob. Otherwise, you might burn yourself.

Make sure that children travelling in the vehicle are not able to injure themselves on the hot cigarette lighter or cause a fire with it.

⚠ WARNING

Do not press the cigarette lighter in too forcefully. The ashtray compartment could close and your fingers could become trapped.

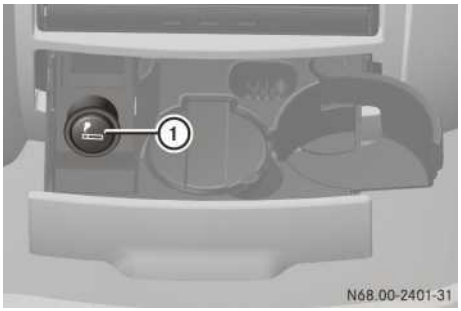

Ashtray compartment in the centre console

- ▶ **To use the cigarette lighter:** turn the key to position **1** in the ignition lock.
- ▶ Press in cigarette lighter ①.
  The cigarette lighter will pop out automatically when the heating element is red-hot.
- ▶ Pull the cigarette lighter out of the socket by its handle.

Stowage spaces and stowage compartments

Important safety notes

⚠ WARNING

You should only load the stowage spaces in such a way that the occupants cannot be injured by objects being thrown around the passenger compartment in the event of an accident, braking or sudden change in direction.

Therefore, do not carry heavy, bulky, pointed or sharp-edged objects in the stowage spaces or stowage compartments.

Dashboard stowage compartment

⚠ WARNING

Do not store objects in the stowage space above the co-driver's airbag if they protrude out of the stowage space. This ensures that the co-driver's airbag can inflate fully.



Example: right-hand side

! A maximum load of 5 kg can be placed in both the right and left-hand stowage spaces.

Stowage compartment above the windscreen

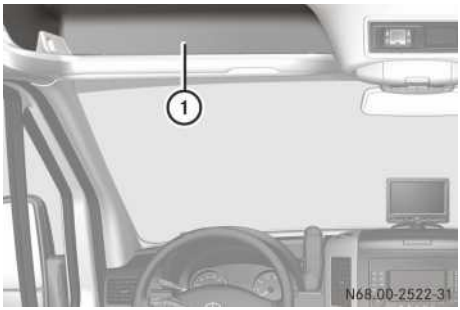

Storage compartment (example: driver's side)
① Stowage compartment

! A maximum load of 2.5 kg can be placed in both the right and left-hand stowage spaces.

Stowage space above the roof trim

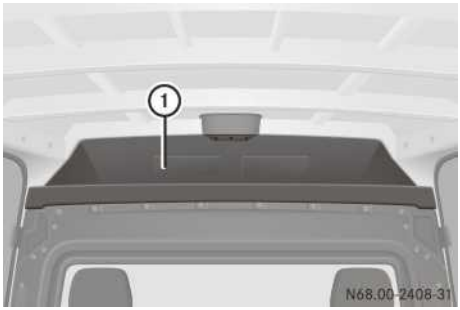

On vehicles with a partition, stowage space ① can be loaded from the load compartment.

! The maximum load which can be placed in the entire stowage space is 30 kg.

Do not place high, bulky loads in the stowage space. You could otherwise damage the roof trim in the event of sharp braking.

Stowage compartment in the centre console



Stowage compartment with lid above the centre console

▶ **To open:** pull release handle ②.
Lid ① swings up.

▶ **To close:** close lid ① and engage it.

The lid of the stowage compartment must remain closed while the vehicle is in motion to ensure that stowed objects are contained safely.

Stowage compartment in the door

You can use these stowage compartments to store small, light items.

Stowage compartment under the twin co-driver's seat

On vehicles with a twin co-driver's seat, the stowage compartment is under the seat cushion (▷ page 74).

You can use the stowage compartment to safely store tools and other small parts.

Stowage compartment under the rear bench seat

On vehicles with a crewcab, the stowage compartment is located underneath the folding rear bench seat (▷ page 74).

You can use the stowage compartment to safely store tools and other small parts.

Glove compartment

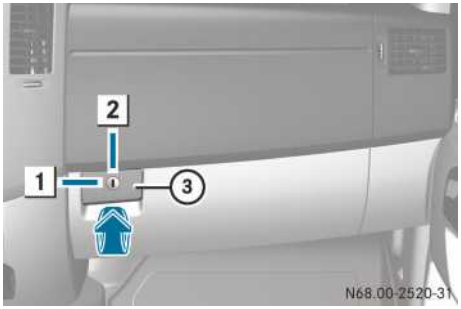

1 Locked
2 Unlocked
③ Glove compartment handle

ⓘ You can lock and unlock the glove compartment using the emergency key element (▷ page 277).

▶ **To open:** pull glove compartment handle ③ in the direction of the arrow.

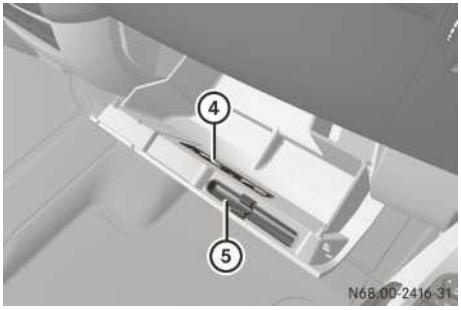

④ Card holder
⑤ Pen holder

▶ **To close:** fold the cover up and press it until it engages.

Spectacles compartment in the overhead control panel



▶ **To open:** press cover ① of the spectacles compartment.
The spectacles compartment folds out.

▶ **To close:** press cover ① of the spectacles compartment into the overhead control panel until it engages.

Paper holder



▶ Press the top of paper holder ①.

Folding table

Twin co-driver's seat



▶ Pull folding table ① forwards by the tab.

▶ Fold folding table ① down in the direction of the arrow and onto the seat cushion.

ⓘ The folding table is equipped with a pen holder and cup holder.

Cup holder

Important safety notes

⚠ **WARNING**

Do not place any objects in the cup holder while the vehicle is in motion. Otherwise, vehicle occupants could be injured by objects being thrown around if you:

- brake sharply
- change direction suddenly
- are involved in an accident

Only use the cup holders for containers of a suitable size and which have lids. The drinks could otherwise spill.

Cup holders should not be used for hot drinks. You may otherwise scald yourself.

❗ Do not use the cup holder recesses as ashtrays. This could damage the cup holders.

Front cup holder

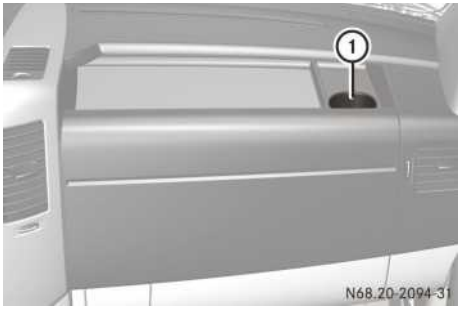

Cup holder (example: right-hand side of vehicle)

① Cup holder in the dashboard stowage compartment

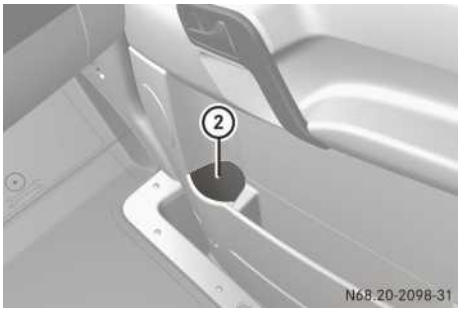

Bottle holder (example: right-hand side of vehicle)

② Bottle holder in the front door

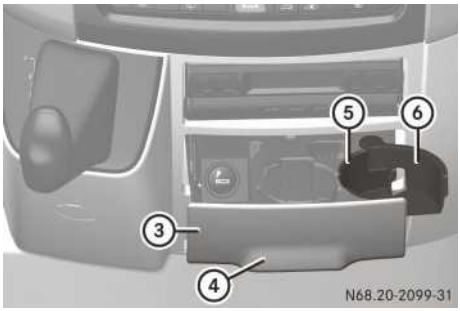

Cup holders in the centre console

▶ Pull ashtray compartment ③ out by recess ④.
Cup holder ⑤ opens fully.

ⓘ Vehicles with the non-smoking package have an additional cup holder instead of the ashtray.

ⓘ You can adjust the diameter of the cup holder.

▶ Place the beverage container in cup holder ⑤.

▶ Push clamping arm ⑥ against the container.

ⓘ The folding table of the twin co-driver's seat is also equipped with a cup holder .

Rear cup holder

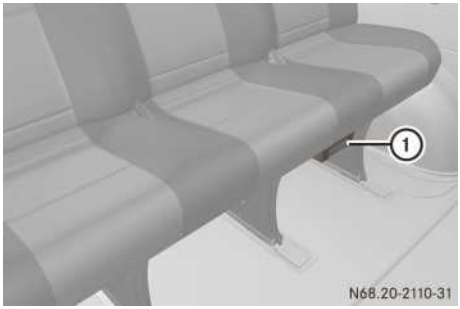

Rear bench seat in the crewbus

▶ Pull out cup holder ①.

⚠ **WARNING**

Slide the cup holders back under the bench seat before leaving the vehicle. You could otherwise injure yourself on the protruding cup holders.

Socket



Socket on the lower section of the centre console

① 12 V socket, 25 A

You can use the 12 V socket for accessories with a maximum power consumption 300 W.

Additional 12 V sockets (15 A) can be found on the driver's seat frame and in the passenger compartment/luggage compartment in the rear. You can use the 12 V sockets (15 A) for accessories with a maximum power consumption of 180 W.

ⓘ The sockets are supplied with power even when the key is removed from the ignition lock. Please be aware that the battery may become discharged if accessories, e.g. a coolbox, remain connected while the engine is not running.

Communications

Electronic communications equipment

⚠ **WARNING**

You must observe the legal requirements in the country in which you are driving when operating mobile communications equipment in the vehicle.

If it is legally permitted to operate mobile communications equipment while the vehicle is in motion, you may only operate it when road and traffic conditions permit. You could otherwise be distracted from the traffic conditions, cause an accident and injure yourself and others.

Mobile communications equipment (e.g. mobile phones, radio or fax equipment) without a low-reflection external aerial can interfere with the vehicle electronics, impairing the operating reliability of the vehicle and putting your own safety at risk. You must therefore only use these devices when they are properly connected to a separate, low-reflection, external aerial.

Failure to observe the Mercedes-Benz installation specifications can result in the invalidation of your vehicle's operating permit.

You will find information on retrofitting electrical or electronic equipment in the "Technical data" section (▷ page 289).

Telephone:

⚠ WARNING

You must observe the legal requirements of the country in which you are currently driving when operating a mobile phone in the vehicle.

If it is permitted to operate a mobile phone while the vehicle is in motion, only operate it when road and traffic conditions permit. You could otherwise be distracted from the traffic conditions, cause an accident and injure yourself and others.

Mobile phones without low-reflection exterior aerials could interfere with the vehicle electronics and thus compromise the operational safety of the vehicle, as well as your own safety. Therefore, only use these devices if they are correctly connected to a separate, low-reflection exterior aerial.

⚠ WARNING

Excessive electromagnetic radiation may constitute a health hazard to yourself and others. The use of an exterior aerial takes into account current scientific discussions relating to the possible health risk posed by electromagnetic fields.

Therefore, only have the exterior aerial fitted at a qualified specialist workshop.

Mercedes-Benz recommends the use of an approved exterior aerial for operating the mobile phone. Only in this way can optimal mobile phone reception quality in the vehicle be ensured and mutual interference between the vehicle electronics and mobile phones minimised.

In Germany, it is prohibited to use a mobile telephone in vehicles which are not equipped with a hands-free system either while you are driving or with the engine running.

Observe the legal requirements for each individual country.

You can choose between two systems that support mobile phones supplied by different manufacturers:

- mobile phone fitting (networked)[10]
- mobile phone fitting (no networking)

  A description of the mobile phone fitting (no networking) can be found in the separate supplement.

Both systems include a hands-free system integrated into the vehicle. The microphone for the hands-free system is fitted in the overhead control panel or in the overhead stowage compartment together with the front interior light.

In order to use the hands-free system, you will need special mobile phone brackets. The Mercedes-Benz range of accessories includes brackets for various mobile phone models.

ⓘ Mobile phone brackets available from various manufacturers on the open market are not compatible with the Mercedes-Benz telephone system. You can recognise brackets suitable for your mobile phone by the Mercedes Star and by the spare part number B6 on the back.

Detailed instructions for use can be found in the operating instructions for the mobile phone bracket.

ⓘ The mobile phone battery is charged depending on the charge status and the position of the key in the ignition lock. The mobile phone display indicates the charging status.

[10] The mobile phone fitting provided is networked by a fibre-optic cable for communications equipment, e.g. radio or CD changer.

Mobile phone fitting (networked)

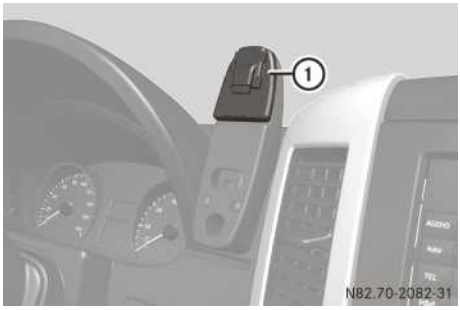

Mobile phone bracket between instrument panel and centre console

The mobile phone is networked with the on-board computer, the respective audio equipment, the loudspeakers and the exterior aerials via contact surface ① on the bracket. This enables you to also operate and display various functions of your mobile phone using the on-board computer.

Fittings for mobile navigation devices (PND)

You can secure a mobile navigation device (**P**ersonal **N**avigation **D**evice PND) directly to the PND bracket, or with adapters which are available to purchase.

Variants

Vehicles with a Bluetooth® hands-free system



PND bracket in the cup holder in the dashboard storage compartment

- ▶ **To secure the PND:** place the PND or adapter on retainers ② of bracket ① and push down to engage in place.
- ▶ Make sure that bracket ①, PND and adapter are secured correctly.

Vehicles without a Bluetooth® hands-free system

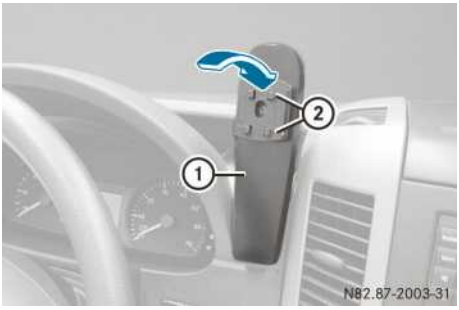

PND bracket beside the centre console

- ▶ **To secure the PND:** place the PND or adapter on retainers ② of bracket ① and push down to engage in place.
- ▶ Make sure that bracket ①, PND and adapter are secured correctly.

Connecting the PND

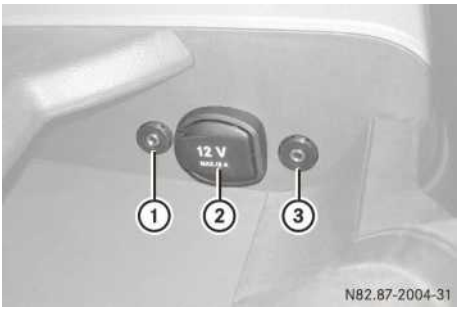

PND connector (on the side behind the instrument cluster)

① 3.5 mm audio jack for the PND audio signal (voice announcements)

② 12 V connection (with cover)

③ 2.5 mm audio jack for the radio mute function

i 3.5 mm audio jack ① can also be used for external audio sources.

▶ Connect the PND ports to the appropriate jacks in the vehicle.

When you start the navigation system, the voice announcements are played using the radio speakers. The audio source played until this point is then muted for the duration of the voice announcements.

i Some functions, e.g. the mute function, are only enabled if you are using a Sound 5 radio and mobile navigation devices recommended by Mercedes-Benz.

Mercedes-Benz accessories

Mobile navigation devices which support the AUX connection and the mute function can be purchased from any Mercedes-Benz Service Centre. Other accessories are also available.

Useful information 172
Driving tips 172
Refuelling 175
Transporting loads with the vehicle 176
Operation in winter 184
Service products 186
Cleaning and care 193
Maintenance 198

Useful information

These Operating Instructions describe all models and standard and optional equipment of your vehicle that were available at the time of printing. Country-specific variations are possible. Note that your vehicle cannot be fitted with all of the described functions. This also applies to systems and functions relevant to safety.

Read the information on qualified specialist workshops: (▷ page 19).

Driving tips

Running-in

It is of decisive importance for the operating life, reliability and economy of the vehicle that the engine is not subjected to its full rated load during the running-in period.

Up to 1500 km

- Run the vehicle in carefully. Drive at varying road and engine speeds.
- Avoid heavy loads (driving at full throttle) and high engine speeds. Do not exceed ¾ of the maximum speed for each gear.
- Change gear in good time.
- Do not change down a gear manually in order to brake.
- Avoid depressing the accelerator pedal beyond the pressure point on vehicles with an automatic transmission (kickdown) and only engage gear **4**, **3**, **2** or **1** while driving slowly.

After 1500 km

- Gradually bring the vehicle up to full road and engine speeds.

ⓘ These instructions must also be observed if you have the engine, the transmission or the rear axle differential of your vehicle replaced.

Driving abroad

An extensive network of Mercedes-Benz Service Centres is also at your disposal when you are travelling abroad. The workshop directories are available from any Mercedes-Benz Service Centre.

In some countries, only fuels with a lower octane rating or a higher sulphur content are available.

You will find information about fuel in the "Service products" section (▷ page 189).

Mercedes-Benz recommends fitting a fuel filter with a water separator if the vehicle is mainly operated in countries with high water content in the diesel fuel.

If you are travelling in countries where vehicles are driven on the opposite side of the road to that in which the vehicle is registered, you must have the headlamps:

- partially masked (halogen headlamps)
- switched over (bi-xenon headlamps)

⚠ **WARNING**

Masking the headlamps incorrectly can impair your visibility when driving with the headlamps switched on. You could also impede other road users.

Always have the headlamps masked/switched over at a qualified specialist workshop. Otherwise, you could dazzle oncoming traffic and cause an accident.

Driving off-road

When driving the vehicle, particularly on rough terrain, ensure that the driven wheels always have sufficient traction.

Avoid letting the drive wheels spin. Spinning drive wheels can damage the differential.

❗ Always observe the ground clearance of the vehicle and avoid obstacles, e.g. deep ruts.

Obstacles could damage the vehicle, for example:

- the axles
- the propeller shafts and the transmission
- the tanks and supply reservoirs

For this reason, you should always drive slowly when driving off-road. If you have to drive over obstacles, have the co-driver direct you.

⚠ WARNING

If you drive too fast off-road, you may not recognise obstacles in good time or you may fail to assess the condition of the ground. When driving off-road, always drive slowly to avoid damaging the vehicle. Such damage could impair the operating safety of your vehicle. You could lose control of the vehicle and cause an accident.

Always drive along the line of fall when you are on a slope. Never drive across a slope. The vehicle may slip to the side, tip and roll over. Never turn the vehicle around on a slope. If the vehicle cannot manage an uphill slope, drive back down the slope in reverse gear.

You could lose control of your vehicle if you shift the transmission to neutral or disengage the clutch on an incline and then try to brake the vehicle using only the service brake. Never let the vehicle roll.

Overloading the vehicle will increase the risk of the vehicle tipping over. Never exceed the maximum permissible axle loads under any circumstances. Keep the vehicle's centre of gravity as low as possible when the vehicle is laden.

If the vehicle is frequently or mainly operated in muddy or marshy terrain, substances that impair braking efficiency, such as sand or oil mixed with water, could get into the brake system. This may lead to excessive wear and a reduction in braking performance (up to the point of total failure).

After driving off-road, always carry out a short brake test. If you detect a reduced braking performance or hear scraping noises, have the brake system checked at a qualified specialist workshop.

⚠ WARNING

When driving off-road, your body is subject to acceleration forces from all directions due to the uneven ground. You could, for example, be thrown out of your seat and injured. Always fasten your seat belt, even when driving off-road.

Rules for driving off-road

⚠ WARNING

When driving over obstructions or ruts, the steering wheel could kick back and injure both thumbs. Always hold the steering wheel cross firmly with both hands. Be prepared for increased steering forces when driving over obstructions.

- Before driving off-road, stop the vehicle and shift to a low gear.
- Only drive off-road with the engine running and a gear engaged.
- Drive slowly and smoothly. Walking pace is necessary in many situations.
- Make sure that the wheels always remain in contact with the ground.
- Drive with extreme care over unknown terrain where you can only see for a short distance. As a precaution, get out of the vehicle to take a look at the route to be taken first.
- Check the water depth before fording.
- Watch out for obstacles (e.g. rocks, holes, tree stumps and ruts).
- Avoid edges where the surface could crumble or break away.

Before driving off-road

- ▶ **All-wheel-drive vehicles:** switch on all-wheel drive (▷ page 136) and select LOW RANGE gear reduction (▷ page 138).
- ▶ If the surface demands it, temporarily deactivate ASR when pulling away (▷ page 134).
- ▶ Safely stow or secure any items of luggage or loads (▷ page 176).

ⓘ Mercedes-Benz recommends that you additionally carry a shovel and a recovery rope with a shackle in the vehicle.

After driving off-road

⚠ **WARNING**

Damage caused by driving off-road may lead to consequential damage, the failure of assemblies or accidents. Clean and check the vehicle after every off-road trip. Repair any damage before using the vehicle again.

- ▶ Activate ASR (▷ page 134).
- ▶ Clean the vehicle (▷ page 197).
- ▶ Check the vehicle for damage.

Transport by rail

Transporting your vehicle by rail may be subject to certain restrictions or require special measures to be taken in some countries due to varying tunnel heights and loading standards.

You can obtain information about this from any Mercedes-Benz Service Centre.

Fuel consumption

Fuel consumption depends on:

- the vehicle version
- the style of driving
- the operating conditions
- the type or quality of the fuel used

Observe the advice in the "Protection of the environment" section to keep fuel consumption low (▷ page 17).

The following components of the different vehicle versions influence fuel consumption:

- tyre sizes, tyre tread, tyre pressure, tyre condition
- body
- drive unit gear ratios
- additional equipment (e.g. air-conditioning system, auxiliary heating system).

For these reasons, the actual consumption figures for your vehicle may deviate from the consumption figures determined according to EU Directive 80/1268/EEC (▷ page 300).

Details concerning fuel consumption are recorded in the on-board computer; use the steering wheel buttons to call up the Trip computer menu (▷ page 94).

Engine oil consumption

❗ If the vehicle is predominantly used for short-distance driving, this could lead to a fault in the automatic cleaning function for the diesel particle filter. As a result, fuel may accumulate in the engine oil and cause engine failure.

Depending on how it is driven, the vehicle consumes a maximum of 1.0 l oil per 1000 km.

Oil consumption may be higher if:

- the vehicle is new.
- you mainly operate the vehicle under arduous operating conditions.
- you frequently drive at high engine speeds.

Regular maintenance is one of the preconditions for moderate rates of consumption.

You can only estimate the oil consumption after you have driven a considerable distance.

Check the oil level on a regular basis, e.g. weekly or each time you refuel (▷ page 203).

Speed limiter

You can permanently limit the maximum speed of your vehicle to 90 km/h, 100 km/h or 120 km/h.

Mercedes-Benz recommends that you have the maximum speed programmed at a Mercedes-Benz Service Centre.

On vehicles with steering wheel buttons, you can temporarily or permanently limit the maximum speed of your vehicle using the on-board computer (▷ page 148).

Before overtaking, take into consideration that the engine speed limiter prevents the speed increasing beyond the programmed maximum speed.

On downhill gradients, the limit speed may be exceeded. Apply the brakes if necessary. Display messages indicate that you are approaching the limit speed – vehicles without steering wheel buttons (▷ page 231), vehicles with steering wheel buttons (▷ page 232).

⚠ WARNING

Exceeding the permissible maximum speed can cause tyre damage, which could lead to loss of control of the vehicle.

As the driver, you must find out about the maximum speed of the vehicle and the resulting permissible maximum speed of the tyres (tyre and tyre pressure).

You must not exceed the speed limit for the tyres listed in the tyre pressure tables.

ⓘ You will find information about tyre pressure in the "Technical data" section (▷ page 290).

Reverse warning device

On vehicles with a reverse warning feature, a warning signal sounds when reverse gear is engaged to alert other road users. The volume of this warning signal can be reduced for night-time driving.

⚠ WARNING

Other road users could fail to hear or could ignore the reverse warning feature warning signal. For this reason, the reverse warning feature cannot guarantee that there are no people or objects behind your vehicle.

The reverse warning feature is a system designed to assist you in ensuring the safety of other road users. It does not however relieve you of your responsibility to make sure that there are no persons or objects behind your vehicle while you are manoeuvring.

For this reason, always observe the road and traffic conditions with due caution. To avoid damage and injury, make sure that there are no persons or objects behind the vehicle while you are manoeuvring. Have a second person assist you when manoeuvring if necessary.

▶ **To set the warning signal to quiet:** engage the reverse gear twice in brief succession.

The volume of the warning signal is reduced.

ⓘ The warning signal sounds at normal volume by default and will need to be reduced in volume each time reverse gear is engaged.

Refuelling

⚠ WARNING

Fuel is highly flammable. Fire, naked flames and smoking as well as the use of auxiliary heaters (sparks) are therefore prohibited when handling fuel.

Switch off the engine and the auxiliary heating before refuelling.

⚠ WARNING

Avoid contact with fuels.

It is hazardous to your health if your skin comes into direct contact with fuels or you breathe in fuel vapours.

⚠ WARNING

Do not use petrol to refuel vehicles with a diesel engine. Do not mix diesel with petrol. This would result in damage to the fuel system and engine, which could lead to a vehicle fire.

Environmental note

If fuels are handled improperly, they pose a danger to persons and the environment. Do not allow fuels to run into the sewage system, the surface waters, the ground water or into the ground.

! If you are refuelling the vehicle from drums or canisters, filter the fuel before refuelling.

This prevents malfunctions in the fuel system caused by contaminated fuel.

! Do not use petrol to refuel vehicles with a diesel engine. Do not use diesel to refuel vehicles with a petrol engine. Even small amounts of the wrong fuel will cause damage to the fuel system and engine.

! Do not switch on the ignition if you accidentally refuel with the wrong fuel. Otherwise, the fuel will enter the fuel lines. Notify a qualified specialist workshop and have the fuel tank and fuel lines drained completely.

i Vehicles with a petrol engine are E10-compatible. E10 fuel contains an admixture of up to 10 % bioethanol. You can refuel your vehicle with E10.

The fuel filler flap is beside the front left-hand door when viewed in the direction of travel. It is only possible to open the fuel filler flap when the front door is open.

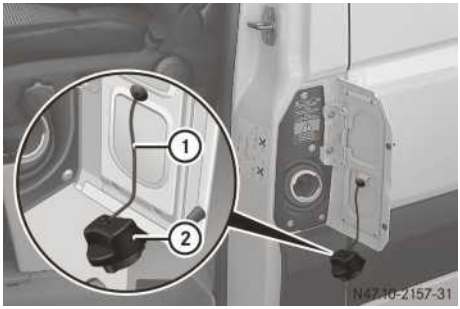

- Remove the key from the ignition lock.
- Switch off the auxiliary heating system (▷ page 115).
- Open the front left-hand door first, and then the fuel filler flap.
- Close all vehicle doors to prevent fuel vapours from entering the vehicle.
- Turn fuel filler cap ② anti-clockwise, remove it and let it hang from strap ①.
- Only fill the fuel tank until the pump nozzle switches off.
- Replace tank filler cap ② and turn clockwise.

  You will hear a click when the fuel filler cap is closed fully.
- Open the front left-hand door first, and then close the filler flap.

You will find information about fuel in the "Service products" section (▷ page 189).

Transporting loads with the vehicle

Loading guidelines

Important safety information

⚠ WARNING

Secure and position the load as described in the loading guidelines. You or others could otherwise be injured by the load slipping or being thrown around in the event of sharp braking, sudden changes in direction or on poor road surfaces. This also applies to seats

which have been removed if they remain in the vehicle.

Even if you follow all loading guidelines, the load increases the risk of injury in the event of an accident. Observe the tips in the "Securing a load" section.

⚠ WARNING

Do not allow the load, including passengers, to exceed the permissible gross vehicle weight or the permissible axle loads for your vehicle.

If the permissible axle loads or permissible gross vehicle weight are exceeded during transport, tyre durability and road safety are adversely affected. The vehicle's handling and steering characteristics change noticeably. Braking and stopping distances are significantly longer.

The vehicle's driving, steering and braking characteristics change as the gross vehicle weight increases or when the centre of gravity is raised.

Always make sure that the distribution of the load is correct and adapt your driving style according to the load.

⚠ WARNING

Always observe the operating instructions of the respective manufacturer when using suitable load securing aids or lashing material and particularly the information on the end of service life contained in these Operating Instructions.

Load securing aids or lashing material must not be used if there is:

- missing or illegible marking
- yarn breaks, damage to load-bearing seams or other traces of cracking
- cutting, deformations, squashed areas or other damage
- damage to clamping elements or fasteners.

These types of load securing aids or lashing material have reached their end of service life, they are unusable and must be replaced.

If you use load securing aids or lashing material which have reached their end of service life, the load may not be sufficiently secured and could cause serious injuries to you and others and cause damage to property.

⚠ WARNING

After an accident, have a damaged load compartment floor/loading surface, the lashing eyes and lashing material checked by a qualified specialist workshop. The load may otherwise not be sufficiently secured during the next transportation and may lead to serious injuries to you or other people as well as material damage.

! If you are using a roof carrier, observe the maximum roof load and maximum roof carrier load.

You will find information about the maximum roof load in the "Technical data" section (▷ page 297) and information about roof carriers in the "Carrier systems" section (▷ page 181).

Before loading

- **Tyre pressure:** check the tyre pressure and correct if necessary (▷ page 290).
- **Load compartment floor:** clean the load compartment floor.

  The load compartment floor must be free from oil and dust, dry and clean swept to prevent the load from slipping.
- Place non-slip mats (anti-slip mats) on the load compartment floor if necessary.

! As soon as the non-slip mats show signs of deformation or develop squashed areas, or traces of cracking/cutting, they can no longer be used to secure a load and must be replaced.

When loading

- Observe the permissible axle loads and permissible gross vehicle weight for your vehicle.

! On passenger car versions with maximum seating layout, the permissible rear axle load would be exceeded if the full payload were to be loaded in the load compartment.

i Take into account that your vehicle's unladen weight is increased if accessories or optional equipment are fitted.

- Observe the notes on load distribution (▷ page 178).
- Secure the load (▷ page 179). Always observe the relevant country-specific legal requirements, laws and regulations.

On platform vehicles

- Where possible, load the platform so that the centre of gravity is at the centre of the platform.
- Load large rocks or pieces of rubble carefully. Do not drop them onto the platform from too great a height.
- Use tensioning chains if necessary. Tensioning chains prevent the loading tailgates from bulging outwards.

Checking the load

- **Securing loads:** make sure that the load is secure before every journey and at regular intervals during a long journey, and correct if necessary.
- **Doors:** close the sliding doors and rear doors.

⚠ **WARNING**

Make sure that the sliding doors and rear doors are always closed when the engine is running.

Exhaust fumes could otherwise enter the vehicle interior and poison you.

- **Loading tailgates:** on platform vehicles, the loading tailgates must be locked (▷ page 66).
- **Headlamps:** adjust the headlamp range if necessary (▷ page 100).
- **Tyre pressure:** adjust the tyre pressures according to the vehicle load (▷ page 290).
- **Handling characteristics:** adapt your driving style according to the load being transported.

Load distribution

The overall centre of gravity of the load should always be as low as possible, centred and between the axles near the rear axle.

! Excessive loads on individual points of the load compartment floor or on the load surface impair vehicle handling characteristics and could cause damage to the floor covering.

On panel vans/crewbuses:

- Always stow loads in the load compartment.
- Always place the load against the backrests of the rear bench seat.
- Move large and heavy loads as far towards the front of the vehicle as possible against the rear bench seat. Stow the load flush with the rear bench seat.
- Always additionally secure the load with suitable load-securing aids or lashing material.

i Observe the following notes:

- Do not stack loads higher than the upper edge of the backrests.
- Transport loads behind seats that are not occupied.
- If the rear bench seat is not occupied, insert the seat belts crosswise into the buckle of the opposite seat belt.

Securing loads

General notes

The driver is responsible for ensuring that the load is secured against slipping, tipping, rolling or falling off. This applies both in normal traffic conditions and if the vehicle must swerve to avoid an obstacle, in the event of full brake application and on poor road surfaces.

Your load must be secured in accordance with applicable regulations and technical requirements. If this is not the case, this may – depending on local legislation and the resulting consequences – constitute a punishable offence.

You should therefore observe the respective legal requirements for the relevant country.

Make sure that the load is secure before every journey and at regular intervals during a long journey. Correct an incorrectly or inadequately secured load if necessary.

ⓘ You can obtain information about securing the load correctly from the manufacturer of the load-securing aids or lashing material.

- ▶ Fill spaces between the load and the load compartment walls or wheel arches (form fit). Use rigid load-securing aids, such as wedges, wooden fixings or padding.
- ▶ Once the load has been fixed so that it cannot tip or slide, secure it in all directions to lashing points, lashing eyelets or loading rails in the load compartment or on the load surface. Only use lashing material, such as lashing rods or lashing nets and lashing straps, that has been tested in accordance with current standards (e.g. DIN EN).

  Always use the lashing eyelets closest to the load and pad sharp edges for protection.

ⓘ Lashing material tested in accordance with current standards (e.g. DIN EN) can be obtained from any specialist firm or Mercedes-Benz Service Centre.

Loads, and heavy loads in particular, should preferably be secured using the lashing eyelets.

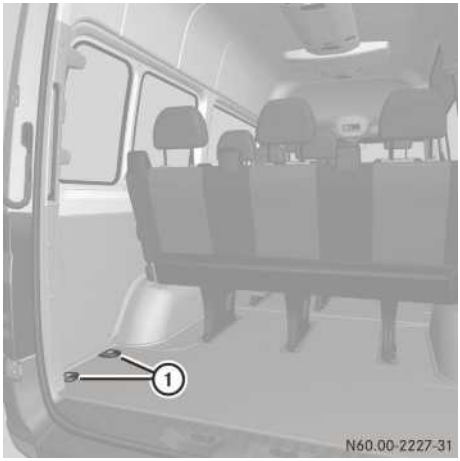

Lashing points (example: crewbus)

① Lashing eyelets

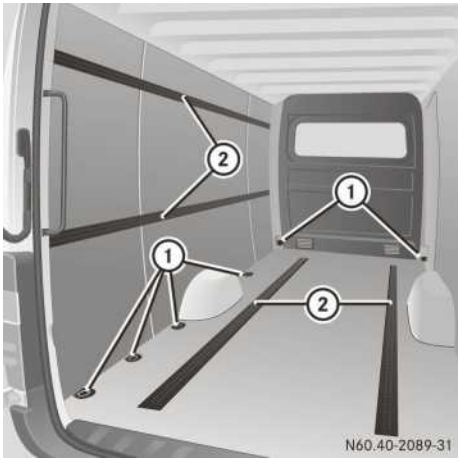

Lashing points (example: panel van)

① Lashing eyelets

② Loading rails

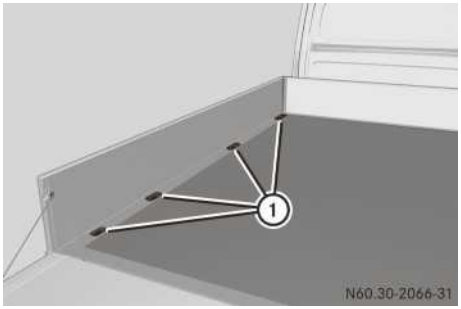

Lashing points (example: platform truck)
① Lashing eyelets

Once you have removed the platform dropsides, you can use the lashing points on the bottom left and right of the cross member.



Lashing points (example: platform truck)
① Lashing eyelets

⚠ WARNING

Do not attempt to modify or repair the lashing points, lashing eyelets or lashing materials. The load or the lashing eyelets could work loose and cause serious injury to you and other people as well as damage to objects in the vehicle.

Spread the load evenly between the lashing points or eyelets.

Observe the loading guidelines.

ⓘ Secure loose loads, in particular on the load surface of a platform truck, using an approved lashing net or tarpaulin.

▶ Always fasten the lashing net or tarpaulin to all available lashing points. Make sure that the retaining hooks are secured against accidental opening.

❗ Observe the information regarding the maximum load capacity of the individual lashing points.

If you combine a number of lashing points to secure a load, you must always take into account the maximum load capacity of the weakest lashing point.

For example, when the brakes are fully applied, forces act which can be many times that of the weight force of the load. Always use several lashing points to distribute the load evenly.

Information about the maximum loading capacity of the lashing points can be found in the "Technical data" section (▷ page 297).

ⓘ If your vehicle is equipped with loading rails in the floor, you can place lashing rods directly in front of and behind the load. The lashing rods directly absorb the potential shifting forces.

⚠ WARNING

If you tension the lashing straps between the side walls, or between a side wall and the load compartment floor, the maximum permissible load for the loading rails or lashing points or eyelets could be exceeded if the brakes are applied suddenly, if the vehicle's direction is changed abruptly or in the event of an accident.

The load would no longer be secured, resulting in a risk of serious injury being caused by the load slipping.

For this reason, do not tension a lashing strap between the side walls or between a side wall and the load compartment floor.

Only lashing rods are to be used between the loading rails on the side walls. Observe the operating instructions of the lashing rod manufacturer.

ⓘ Securing loads on the load compartment floor by lashing them down is only recommended for lightweight loads. Place non-

slip mats (anti-slip mats) under the load to increase load security.

⚠ WARNING

Before releasing the lashing straps, you must make sure that the load is standing firmly and that it cannot tip over once the straps have been removed. Otherwise, you or others could be injured by the load slipping.

Fitting/removing lashing points for the loading rails

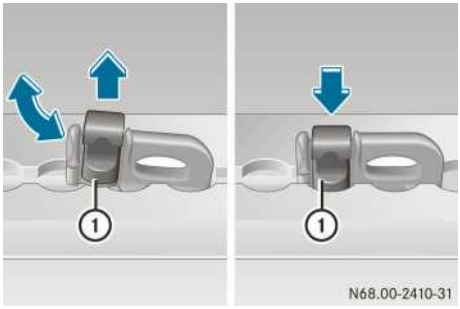

- ▶ **To fit:** slide the lashing eyelet through a recess in the loading rail close to the load until locking mechanism ① engages in the recess.

ⓘ When you pull locking mechanism ① up and out of the recess, the lashing eyelet is able to move within the loading rail. Make sure that locking mechanism ① is always engaged in a recess.

⚠ WARNING

If not firmly anchored in the loading rail, the lashing eyelet may slip or be torn out of the loading rail in the event of sudden braking.

The load would no longer be secured, resulting in a risk of serious injury being caused by the load slipping. For this reason, always check the lashing eyelet for firm seating after fitting.

- ▶ Check the lashing eyelet for firm seating.
- ▶ **To remove:** pull locking mechanism ① up and pull the lashing eyelet towards the locking mechanism and out of the loading rail through a recess.

Carrier systems

It is possible to fit a roof carrier if your vehicle is equipped with securing rails on the roof.

Special mountings (sliding blocks) are available as accessories. These are available from any Mercedes-Benz Service Centre.

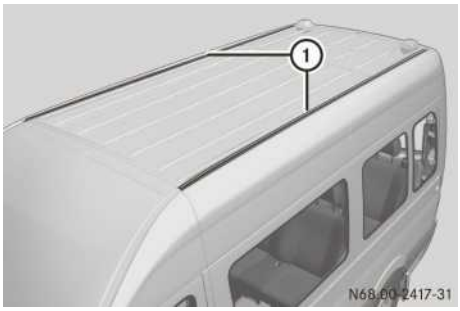

① Securing rails

⚠ WARNING

If you have fitted roof carrier systems, the vehicle's handling, steering and braking characteristics may change due to the higher centre of gravity. This is the case particularly if the roof carrier system is laden. Adapt your driving style according to the vehicle load.

Always follow the manufacturer's installation instructions. An incorrectly secured roof carrier system and/or load could come loose and fall off, endangering you and others.

Observe the maximum roof load and maximum roof carrier system load. Loads transported on the roof must always be secured with particular care.

Do not allow the load, including passengers, to exceed the permissible gross vehicle weight or the permissible axle loads for your vehicle.

You can find information about the maximum roof load in the "Technical data" section (▷ page 297).

! Make sure that:

- the securing bolts for the roof carrier are tightened to a torque of 8 - 10 Nm in the sliding blocks provided.
- the bolts do not make contact with the rails when tightened.
- the sliding blocks are not positioned near the plastic caps.
- the sliding blocks have the correct cross-section.
- the securing rails are free of dirt on the inside.
- the securing bolts are retightened evenly after approximately 500 km.

Mercedes-Benz recommends that you only use roof carrier systems which have been tested and approved for Mercedes-Benz. This will help avoid damage to the vehicle.

! If you wish to retrofit securing rails, have them fitted at a qualified specialist workshop which has the necessary specialist knowledge and tools to carry out the work required. Otherwise, you could damage the vehicle.

Mercedes-Benz recommends that you use a Mercedes-Benz Service Centre for this purpose.

Trailer towing

Important safety information

The trailer tow hitch is one of the most important components on the vehicle with regard to road safety. Observe the notes on operation, care and maintenance in the manufacturer's operating instructions.

The turn signals on the trailer are only guaranteed to function when bulbs are used. You can obtain more information about installing the trailer electrics at any qualified specialist workshop.

⚠ **WARNING**

Follow the manufacturer's operating instructions for the trailer tow hitch when using a detachable trailer tow hitch.

Couple and decouple the trailer carefully. A trailer which is incorrectly coupled to the towing vehicle could break away. A correctly coupled trailer must be positioned horizontally behind the vehicle.

Ensure that the following weights are not exceeded:

- the permissible noseweight
- the permissible trailer load
- the permissible rear axle load of the towing vehicle
- the permissible gross weight for both the towing vehicle and the trailer

The permissible values, which must not be exceeded, can be found in your vehicle documents and on the trailer tow hitch type plates for the trailer and the vehicle. Where the values differ, the lowest is valid.

i The applicable permissible values, which must not be exceeded, can be found:

- in your vehicle documents
- on the type plates for the trailer tow hitch
- on the type plates for the trailer
- on the vehicle identification plate (▷ page 290).

Where the values differ, the lowest is valid. You will find information about installation dimensions in the "Technical data" section (▷ page 298).

Take into account that the vehicle's permissible payload must be reduced to compensate for the noseweight.

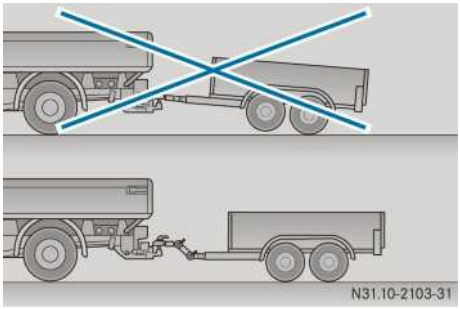

Trailer coupled ready for use

▶ Position the trailer horizontally behind the vehicle.

▶ Couple the trailer.

⚠ WARNING

Never uncouple a trailer if the trailer brake is overrun. Your hand could otherwise become trapped between the bumper and drawbar.

! Do not disconnect a trailer with an engaged overrun brake. Otherwise, your vehicle could be damaged by the rebounding of the overrun brake.

Driving when towing a trailer

In Germany, the maximum permissible speed for vehicle/trailer combinations is 80 km/h (100 km/h in exceptional cases).

! Do not exceed the maximum speed of 80 km/h (100km/h) even in countries where higher speeds are permitted for vehicle/trailer combinations.

i Vehicles with passenger vehicle approval:

In accordance with EC Directive 92/ 21/EEC, the permissible gross vehicle weight on vehicles with passenger vehicle approval is increased by 100 kg when towing a trailer.

The trailer drawbar noseweight must not exceed:

- 100 kg with a trailer load of 2,000 kg
- 120 kg with a trailer load of 2,800 kg or 3,000 kg
- 140 kg with a trailer load of 3,500 kg

The maximum permissible speed is limited to 100 km/h. Always observe the legal requirements.

Note the following differences when driving a vehicle/trailer combination in comparison with driving without a trailer:

- acceleration and gradient climbing capabilities are reduced.
- braking distance is greater.
- vulnerability to side winds is increased.
- directional stability is adversely affected.
- fuel consumption is increased.

Driving tips:

- maintain a greater distance than you would when driving without towing a trailer.
- avoid sudden braking. Apply the brakes gently at first to allow the trailer brake to overrun. Then, increase the brake force quickly.
- the figures for the gradient climbing capabilities from a standstill refer to sea level. When driving in mountainous areas, note that the power output of the engine, and with it its gradient climbing capability, decrease with increasing altitude.
- on long and steep downhill gradients, you must shift to a lower gear/shift range in good time. You thereby make use of the braking effect of the engine and do not have to brake as often to maintain the speed. This relieves the load on the service brake and prevents the brakes from overheating and wearing too quickly. If you have to apply the brakes additionally, do not depress the brake pedal continuously. Brake intermittently.

⚠ WARNING

Never depress the brake pedal continuously while the vehicle is in motion, e.g. never cause the brakes to rub by applying constant slight pedal pressure. This causes the brake system to overheat, increases the braking distance and can lead to the brakes failing completely.

If the trailer begins to swing from side to side:

- ▶ do not accelerate.
- ▶ do not counter-steer.
- ▶ brake if necessary.

⚠ WARNING

On no account should you attempt to draw the vehicle/trailer combination out by increasing speed.

Trailers with a 7-pin connector

If your trailer has a 7-pin connector, you can connect it to the 13-pin socket on the ball coupling using an adapter. An adapter plug or adapter cable is available at any qualified specialist workshop.

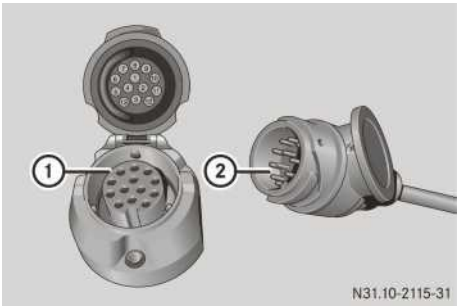

- ▶ **To fit the adapter:** open the socket cover.
- ▶ Insert connector with lug ② into the groove of socket ① and turn the connector clockwise to the stop.
- ▶ Close the cover so that it engages.
- ▶ If you are using an adapter cable, secure the cable to the trailer with cable ties.

! Make sure that there is sufficient cable play so that the cable cannot become detached when cornering.

Operation in winter

General notes

Have your vehicle winterproofed at a qualified specialist workshop at the onset of winter.

This service includes the following:

- oil change, if the engine oil currently used does not have adequate low temperature characteristics or if these are no longer sufficient due to ageing
- the antifreeze/anti-corrosion concentration in the coolant is checked
- the addition of a concentrated cleaning agent to the water in the windscreen washer/headlamp cleaning system
- battery check
- a tyre change

Prior to the onset of winter, ensure that snow chains are stowed in the vehicle (▷ page 185).

Do not cover the surface of the radiator or the radiator grille, even in winter. These could cause the engine diagnostics to register distorted and incorrect data. In some countries, the recording of engine diagnostic data is legally prescribed and must therefore be correct, clear and comprehensible at all times.

You will find information about diesel fuel for use at low outside temperatures in the "Operation" section (▷ page 189).

Please also observe the information about winter driving (▷ page 128).

Winter tyres

Use winter tyres at temperatures below +7 °C and on snow or ice-covered roads. Only then may the ABS, ASR, BAS, ESP® driving safety systems and the starting-off aid operate to optimum effect.

Use winter tyres of the same make and tread on all wheels to maintain safe handling characteristics.

⚠ WARNING

You must replace winter tyres with a tread depth of less than 4 mm immediately. These tyres are unsuitable for use in winter and no longer provide sufficient grip. As a result, you could lose control of the vehicle and cause an accident.

Always observe the maximum permitted speed specified for the winter tyres you have fitted. If you fit winter tyres which have a lower maximum permitted speed than that of the vehicle, affix an appropriate warning sign in the driver's field of vision. You can obtain this at a qualified specialist workshop.

- In this case, use permanent SPEEDTRONIC[11] to limit the maximum speed of the vehicle to the maximum speed permitted for the winter tyres (▷ page 150).
- Reactivate the tyre pressure monitor (▷ page 139).

⚠ WARNING

If you fit the spare wheel when driving with winter tyres, you should expect unstable cornering characteristics and impaired driving stability as a result of the different tyres. You should therefore adapt your driving style and drive carefully.

Have the spare wheel replaced at the nearest qualified specialist workshop. You could otherwise cause an accident.

ⓘ When wheels and tyres have been removed, store them in a cool, dry and dark place. Protect the tyres against oil, grease and fuels.

Snow chains

Snow chains offer better traction in wintry road conditions.

⚠ WARNING

Vehicles with all-wheel drive and 225/75R16 116/114R (118P) single tyres do not offer sufficient clearance for commercially available snow chains. If you fit commercially available snow chains, there is a risk of the snow chains coming loose and causing severe damage to chassis components or to brake hoses.

You could thereby lose control of the vehicle and cause an accident, injuring yourself or others.

Only fit Pewag Brenta C 4x4 XMR-V86143 snow chains on vehicles with 225/75R16 116/114R (118P) single tyres.

❗ Before fitting the snow chains, check them for damage. Damaged or worn snow chains can tear and damage the wheels, wheel housings or wheel suspension. Therefore, only use snow chains that are in perfect condition. Comply with the manufacturer's installation instructions.

If you intend to fit snow chains, please bear the following points in mind:

- Snow chains may not be fitted on all wheel/tyre combinations. Observe the approved tyre and snow chain dimensions when fitting the snow chains.

  For safety reasons, Mercedes-Benz recommends that you only use snow chains which have been specially approved for Mercedes-Benz vehicles. Information about snow chains can be obtained from any Mercedes-Benz Service Centre.
- **Vehicles with rear-wheel drive:** only fit snow chains to the rear wheels. On vehicles with twin tyres, fit the snow chains to the outer wheels. Observe the manufacturer's installation instructions.
- **Vehicles with all-wheel drive:** fit snow chains to all wheels. On vehicles with twin tyres, fit the snow chains to the outer wheels. Observe the manufacturer's installation instructions.

[11] Only available in certain countries.

▶ **Vehicles with optional all-wheel drive:** before pulling away with snow chains fitted, engage all-wheel drive (▷ page 136).

Vehicles with steel wheels: if you wish to fit snow chains to steel wheels, make sure that you remove the respective wheels' hubcaps first. The hubcaps may otherwise be damaged.

When driving with snow chains, it may be advantageous to deactivate ASR (▷ page 134). In this way, you can achieve a cutting action for better tyre traction.

Only drive at the permitted maximum speed with snow chains when you are driving on snow. Observe the legal requirements in each country. As soon as you are back on snow-free roads, remove the snow chains.

Service products

General notes

Service products include the following:

- brake fluid
- fuel
- lubricants (e.g. engine oil, transmission oil, hydraulic fluid, grease)
- antifreeze, coolant

Approved service products comply with the highest quality standards and are listed in the Mercedes-Benz Specifications for Service Products. Only use service products approved for the vehicle. This is an important condition for the implied warranty.

You can recognise service products approved by Mercedes-Benz by the following labels:

- MB Approval xxx.x (for example, MB Approval 228.5)

  or

- MB-Freigabe xxx.x

Other labels and recommendations indicating the quality or a specification are not necessarily approved by Mercedes-Benz. Information on approved service products can be obtained at any Mercedes-Benz Service Centre and on the Internet at:

http://bevo.mercedes-benz.com/

No additives are required or permitted for approved service products (apart from approved flow improvers). Additives can cause engine damage and must therefore not be added to the fuel or lubricants.

The use of additives is always the responsibility of the vehicle operator. The use of additives may result in the restriction or loss of your implied warranty entitlements.

WARNING

Service products are hazardous to health. They contain toxic and caustic substances.

Service products are highly flammable.

For this reason, observe the following instructions to prevent injuries to yourself and others:

- Do not inhale the vapours. When indoors, always ensure there is sufficient ventilation to prevent intoxication.
- Do not let service products come into contact with skin, eyes or clothing. Should contact occur, however, clean the affected areas of skin with water to prevent caustic burns and other injuries.

  In the event of eye contact, wash eyes thoroughly with plenty of clean water.
- Fire, naked flames and smoking are forbidden when handling service products due to their high flammability.
- Observe the usage and warning notices on the containers.

Environmental note

Dispose of service products in an environmentally-responsible manner.

Brake fluid

⚠ **WARNING**

Brake fluid is hazardous to health. Do not swallow brake fluid. See a doctor immediately if you swallow brake fluid.

Make sure that brake fluid does not come into contact with skin, clothing or eyes. Rinse affected areas with plenty of clean water and consult a doctor if necessary.

Always wear gloves and eye protection when topping up brake fluid.

Store brake fluid only in the original closed container and keep it out of the reach of children. Comply with safety regulations when handling brake fluid.

Use only approved brake fluids that comply with the Mercedes-Benz Specifications for Service Products. Information on approved brake fluids for your vehicle can be found in the Maintenance Booklet. You must pay attention to the boiling point (DOT 4 plus).

Over a period of time, the brake fluid absorbs moisture from the air. This reduces its boiling point.

⚠ **WARNING**

If the boiling point of the brake fluid is too low, vapour pockets may form in the brake system whenever the brakes are subjected to a heavy load (e.g. on long downhill stretches). Vapour pockets in the brake system impair braking performance. As a result, the braking distance may increase. This increases the risk of an accident.

Have the brake fluid replaced every **2 years** with brake fluid approved by Mercedes-Benz and have the replacement confirmed in the Service Booklet.

ⓘ There is usually a notice in the engine compartment to remind you when the next brake fluid change is due.

Engine oils

General notes

Use only approved engine oil that complies with the Mercedes-Benz Specifications for Service Products.

Engine oils approved by Mercedes-Benz are indicated as such by featuring the Sheet No. under the "MB-Approval" notice on the oil canister. Information on approved engine oils for your vehicle can be found in the Maintenance Booklet.

These engine oils are of high quality and have a beneficial effect on:

- engine wear
- fuel consumption
- emissions

Multi-grade engine oils of the prescribed SAE class (viscosity) may be used all year round, taking the outside temperatures into account. The oil change intervals may be shortened depending on the sulphur content of the fuel (▷ page 187).

▶ Observe the data in the Maintenance Booklet.

❗ Using engine oils of another grade quality is not permitted.

Oil change

Oil change intervals depend on the vehicle's operating conditions and the quality of the engine oil used.

The on-board computer automatically shows the date for the next oil change as an event message in the display.

Select the SAE class (viscosity) of the engine oil in accordance with the outside temperature.

❗ If the SAE viscosity class of the engine oil used does not cover the outside temperature range in which you are operating the vehicle, it must be changed in good time, in particular before the cold season commences. Using an engine oil that does not have

adequate temperature characteristics can lead to engine damage.

The temperature range information of the SAE classification always refers to that of fresh oil. The temperature characteristics of the engine oil may deteriorate significantly as a result of ageing during vehicle operation, especially at low outside temperatures.

For this reason, Mercedes-Benz recommends that the engine oil be changed before the cold season commences. Use an approved engine oil of the specified SAE class.

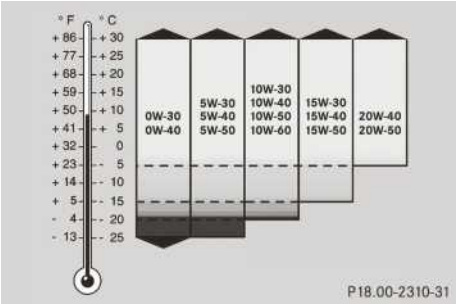

Engine oil SAE classification

ⓘ Only by using engine oil with a particularly high quality grade, e.g. according to Sheet number 228.51 of the Mercedes-Benz Specifications for Service Products, can the maximum interval for oil change be achieved.

When topping up, Mercedes-Benz recommends that you only use engine oil of the same grade and SAE class as the oil filled at the last oil change.

❗ Do not add too much oil. Topping up with too much engine oil can result in damage to the engine or to the catalytic converter. Have excess engine oil siphoned off.

Miscibility of engine oils

If, in exceptional cases, oil of the type in the engine is not available, top up using another approved mineral or synthetic engine oil.

Engine oils are differentiated according to:

- engine oil brand
- quality grade (sheet number)
- SAE class (viscosity)

Subsequently, have the engine oil changed at the earliest possible opportunity.

❗ Mixing oils reduces the benefits of using high grade engine oils.

ⓘ The sheet number (quality grade) and the SAE classification (viscosity) can be found on the designation on the oil container.

Coolant

General notes

⚠ **WARNING**

Coolant contains glycol and is therefore toxic. Do not swallow the coolant. See a doctor immediately if you swallow coolant.

Make sure that coolant does not come into contact with skin, eyes or clothing. In case of contact with eyes, rinse immediately with plenty of clean water. Clean affected areas of skin and clothing with soap and water immediately. Change any affected clothing immediately.

To prevent damage to the engine cooling system, use only approved anti-corrosion/antifreeze agents that comply with the Mercedes-Benz Specifications for Service Products. You will find information about approved anti-corrosion/antifreeze agents for your vehicle in the Maintenance Booklet.

At the factory, the vehicle is filled with coolant that will ensure adequate antifreeze and anti-corrosion protection.

Coolant is a mixture of water and antifreeze/corrosion inhibitor.

In the coolant, the antifreeze/corrosion inhibitor is responsible for:

- corrosion inhibitor protection
- antifreeze protection
- raising the boiling point

Coolant must remain in the engine cooling system all year round to ensure anti-corrosion protection and a higher boiling point – even in countries with high outside temperatures.

Check the antifreeze/corrosion inhibitor concentration in the coolant every six months.

Have the coolant renewed every **15** years.

When renewing the coolant, the coolant may contain 50% by volume corrosion inhibitor/antifreeze. This provides antifreeze protection down to -37 °C.

Do not exceed a proportion of 55% by volume (antifreeze protection down to approximately -45 °C), as otherwise heat dissipation is reduced.

If there is a loss of coolant, do not replenish with water only, but also add an approved corrosion inhibitor/antifreeze agent. The water used as part of the coolant mixture must fulfil certain requirements; these are usually fulfilled by drinking water. If the water quality is not sufficient, you must treat the water.

Observe the Mercedes-Benz Specifications for Service Products, Sheet No. 310.1.

Further information on the operating reliability and road safety of your vehicle can be obtained from any Mercedes-Benz Service Centre.

Coolant additive without antifreeze protection

! As an exception, if antifreeze protection is not required (e.g. in countries with continuously hot climates), it is permissible to add a coolant additive to the water in accordance with Sheet No. 312.0 of the Mercedes-Benz Specifications for Service Products instead of a corrosion inhibitor/antifreeze agent. Improvers (corrosion-inhibiting oils) are not permitted.

In this case, renew the coolant annually.

Further information about the necessary water quality and approved coolant additives without antifreeze properties can be obtained from all Mercedes-Benz Service Centres.

Fuel

Important safety notes

⚠ **WARNING**

Fuel is highly flammable. Fire, naked flames and smoking as well as the use of auxiliary heaters (sparks) are therefore prohibited when handling fuel.

Switch off the engine and the auxiliary heating before refuelling.

⚠ **WARNING**

Avoid contact with fuels.

It is hazardous to your health if your skin comes into direct contact with fuels or you breathe in fuel vapours.

! If you are refuelling the vehicle from drums or canisters, filter the fuel before refuelling.

This prevents malfunctions in the fuel system caused by contaminated fuel.

i **Fuel filter with water separator:** Mercedes-Benz recommends installing a fuel filter with a water separator if you mainly operate your vehicle in countries with increased water content in the diesel. You can obtain information about this from any Mercedes-Benz Service Centre.

Fuel for petrol engines

! Only refuel with unleaded petrol with a minimum octane number of 95 RON/85 MON, which complies with European

standard EN 228 (or a similar national fuel standard for unleaded petrol).

If required, use only approved fuel additives.

There is otherwise a risk of impaired engine performance or engine damage.

ⓘ E10 fuel contains up to 10% bioethanol. Your vehicle is E10-compatible. You can refuel your vehicle using E10 unleaded petrol.

ⓘ You will generally find information about the fuel grade on the filling pump. Otherwise, ask the filling station attendant.

If the recommended fuel is not available, you may, but only as a temporary measure, use unleaded petrol with an octane rating of 91 RON/82.5 MON. This may reduce the engine's performance and increase fuel consumption. Avoid driving at full throttle.

Fuel for diesel engines

! Only refuel using commercially-available automotive diesel fuel that conforms to the European standard EN 590 (or equivalent national fuel standards). Fuels such as alternative fuels (bio-diesel), marine diesel, heating oil etc. are not permitted.

If required, use only approved fuel additives.

There is otherwise a risk of impaired engine performance or engine and catalytic converter damage. The use of fuel additives is always the responsibility of the vehicle operator and may result in the restriction or loss of your implied warranty entitlements.

ⓘ You can obtain information about modification options for operation with alternative fuels (bio-diesel fuels) from any Mercedes-Benz Service Centre.

Fuel grade

ⓘ You will generally find information about the fuel grade on the filling pump. Otherwise, ask the filling station attendant.

Mercedes-Benz recommends having the engine oil changed at more frequent intervals in countries where diesel fuel has a sulphur content exceeding 0.3% by weight.

Observe the data in the Maintenance Booklet.

The following table is an overview of the average sulphur content in percentage by weight in fuels in the countries concerned. You can obtain information about current country-specific fuel sulphur contents from any Mercedes-Benz Service Centre.

ⓘ Diesel fuel with differing fuel sulphur content is available in some countries. Diesel fuel with lower fuel sulphur content is sold in some countries under the name "Euro diesel".

Table of fuel sulphur content (as at March 2008)

Fuel sulphur content		
Continent	**Country**	**Percentage by weight**
Europe, CIS	Armenia, Austria, Azerbaijan, Belarus, Belgium, Bosnia and Herzegovina, Bulgaria, Croatia[12, 13], Cyprus, Czech Republic, Denmark, Estonia, Finland, France, Georgia, Germany, Greece, Hungary, Ireland, Italy, Latvia, Lithuania, Luxembourg, Macedonia[12], Malta, Moldova[12], Netherlands, Norway, Poland, Portugal, Romania[12], Russia, Serbia[12], Slovakia, Slovenia, Spain, Sweden, Switzerland, Turkey, Turkmenistan, Ukraine, United Kingdom	0 ... 0.1
	Albania, Croatia, Kazakhstan, Kyrgyzstan, Montenegro	0.1 ... 0.3
	Tajikistan, Uzbekistan	0.3 ... 0.8
Australia, Oceania	Australia, Fiji, French Polynesia, New Caledonia, New Zealand	0 ... 0.1
Asia	Brunei, China, Hong Kong, India, Japan, Malaysia, Philippines, Singapore, South Korea, Taiwan, Thailand, Vietnam	0 ... 0.1
	Indonesia, Laos, Mongolia, Sri Lanka	0.1 ... 0.3
	Bangladesh, Burma	0.3...0.8
	Afghanistan, Cambodia, Nepal, Pakistan	0.8 ...
Southwest Asia, Middle East	Bahrain, Israel, Jordan[12, 13], Kuwait, Lebanon, Oman, Qatar, Saudi Arabia[12, 13], United Arab Emirates, West Bank	0 ... 0.1
	Saudi Arabia, Syria	0.3...0.8
	Iran, Iraq, Jordan	0.8 ...
North America	Canada, Mexico, USA	0 ... 0.1
Central America, South America, Caribbean	Argentina, Bolivia, Chile, Costa Rica, Guyana, Trinidad and Tobago	0 ... 0.1
	Brazil, Colombia, Panama, Peru	0.1 ... 0.3
	Cuba, Dominican Republic, Ecuador, El Salvador, Guatemala, Honduras, Jamaica, Paraguay, Suriname, Uruguay, Venezuela	0.3...0.8

12 Diesel fuels with the sales designation "Euro diesel" only.

13 Diesel fuels with a higher fuel sulphur content are also available.

Fuel sulphur content		
Continent	**Country**	**Percentage by weight**
Africa	Algeria, Libya, Morocco[12], Reunion, South Africa, Tunisia[12, 13]	0 ... 0.1
	Angola, Ivory Coast (Côte d'Ivoire), Madagascar, Malawi, Mauritius, Nigeria, Tunisia	0.1 ... 0.3
	Cameroon, Gabon, Ghana, Kenya, Mozambique, Senegal, Tanzania, Zambia	0.3...0.8
	Congo (Kinshasa), Egypt, Mali, Sudan, Zimbabwe	0.8 ...

Diesel at low temperatures

At low outside temperatures, paraffin separation may cause the flow properties of the diesel fuel to be insufficient.

To prevent operating problems, diesel with better flow qualities is offered during the winter months.

In Germany, the winter diesel fuels available remain reliable in operation down to about -20 ℃. Winter diesel, which can be used without difficulties at the temperatures normally encountered, is available in most countries.

Fuel additives

Flow improvers are fuel additives that are used to improve the flow characteristics of diesel fuels.

Flow improver is not guaranteed to be effective with every fuel. Observe the manufacturer's recommendations. Information about approved flow improver can be obtained from any Mercedes-Benz Service Centre.

! Do not use fuel additives (with the exception of flow improvers), since this could lead to malfunctions or engine damage. Damage caused by the use of such additives is not covered by the Mercedes-Benz implied warranty.

! Do not add any petrol or kerosene to the diesel fuel to improve flow characteristics. Petrol or kerosene reduces the lubricant properties of the diesel fuel. This can result in damage to the fuel injection system, for example.

If you are using summer-grade diesel or winter-grade diesel with less resistance to low temperatures (for example, in southern Europe), add a quantity of flow improver appropriate for the outside temperature.

Add this additive to the diesel in good time, i.e. before the flow properties of the diesel are affected by paraffin separation. Malfunctions due to paraffin separation can only be rectified by heating the entire fuel system. This is done, for example, by parking the vehicle in a heated area indoors.

⚠ **WARNING**

Heating the fuel system with a hot-air gun, for example, can damage parts of the fuel system. This can cause fuel to escape, ignite and cause a fire.

Never heat the fuel system with a hot-air gun or naked flame.

The vehicle is equipped with a fuel preheating system. This improves the flow properties of the diesel by an additional 8 ℃.

12 Diesel fuels with the sales designation "Euro diesel" only.

13 Diesel fuels with a higher fuel sulphur content are also available.

Cleaning and care

General notes

Regular care helps to retain the vehicle's value.

It is recommended that you use Mercedes-Benz care products. They are designed specifically for Mercedes-Benz vehicles and represent the state of the art. Mercedes-Benz care products are available from any Mercedes-Benz Service Centre.

Do not cover the surface of the radiator or the radiator grille, e.g. with a protective guard. These could cause the engine diagnostics to register distorted and incorrect data. In some countries, the recording of engine diagnostic data is legally prescribed and must therefore be correct, clear and comprehensible at all times.

⚠ WARNING

Always keep care products sealed and out of the reach of children.

Always follow the instructions for using the care products.

Do not use fuels as cleaning agents. Fuels are highly flammable and hazardous to health.

Environmental note

Only wash your vehicle at a wash bay designed for this purpose. Dispose of empty containers and used cleaning products in an environmentally responsible manner.

⚠ WARNING

Never use openings in the bodywork as steps. You may otherwise damage the vehicle or lose your footing and injure yourself or others.

If you have to clean the upper areas of the vehicle, always use suitable ladders or other secure climbing aids.

⚠ WARNING

If steps or entrances are dirty or icy, there is a danger of slipping and falling.

Keep steps, entrances and footwear free from dirt (e.g. mud, clay, snow and ice).

Cleaning the interior of the vehicle

Seat belts

! Observe the following notes on cleaning the seat belts:

- remove any stains or dirt immediately. This will avoid residue or damage.
- do not bleach or dye the seat belts. This could impair the function of the seat belts.
- do not dry the seat belts in direct sunlight or at temperatures above 80 °C.

Steering wheel boss and cockpit

⚠ WARNING

When cleaning the steering wheel boss and dashboard, do not use cockpit sprays or cleaning agents containing solvents. Cleaning agents containing solvents cause the surface to become porous, and as a result plastic parts may break away and be thrown around the interior when an airbag is deployed, which may result in severe injuries.

Use a damp, clean and lint-free cloth to clean the plastic components and the cockpit. If particularly dirty, use a mild detergent.

! Do not use dry, coarse or hard cloths and do not scrub. Doing so will scratch or damage the surfaces.

Radio, COMAND and monitor display

- ▶ Switch off the radio, COMAND or reversing camera monitor and let it cool.
- ▶ Clean the display surface with a commercially available microfibre cloth and cleaner for TFT/LCD displays.
- ▶ After drying, polish the display surface with a dry microfibre cloth, applying only light pressure.

! Do not use dry, rough or hard cloths or abrasive products, solvents or cleaning agents containing solvents. Do not scrub. Only apply light pressure when cleaning.

Otherwise, you will damage the display surface, as it is sensitive to pressure and susceptible to scratches.

Sliding windows

Clean the following every three weeks:

- the seals and the contact areas of the window with a damp cloth
- the guide rails of the window

Windows

! Do not use dry cloths, abrasive products, solvents or cleaning agents containing solvents to clean the inside of the windows. Clean the inside of the windows with a damp cloth or a commercially available glass cleaner.

Do not touch the inside of the rear and side windows with hard objects, e.g. ice scrapers or jewellery. You could otherwise damage the windows or the rear window heating.

Cleaning the exterior of the vehicle

General notes

Scratches, corrosive deposits, or areas affected by corrosion and damage caused by neglect or inadequate care cannot always be completely remedied. In this case, visit a qualified specialist workshop.

! In order to avoid consequential damage, repair damage caused by loose chippings and remove any dirt immediately, in particular:

- insect remains
- bird droppings
- flash rust
- tree resin
- oils and grease
- fuels
- tar stains
- salt residue

Wash your vehicle more frequently if it gets dirty more often.

! Do not park up the vehicle for an extended period straight after cleaning it, particularly after having cleaned the wheels with wheel cleaner. Wheel cleaners could cause increased corrosion of the brake discs and brake pads/linings. For this reason, you should drive for a few minutes after cleaning. Braking heats the brake discs and the brake pads/linings, thus drying them. The vehicle can then be parked up.

Aluminium dropsides

Brush aluminium dropsides down with a solution of water and a neutral or slightly alkaline cleaning agent.

! Do not use abrasive cleaning agents to clean the dropsides. You could otherwise scratch or damage the surfaces.

Electrically operated step

Clean the step, when fully extended, and its housing at least once a month using a high-pressure cleaner. Dirt should not be allowed to accumulate in the housing or on the step.

After cleaning, spray the step guides on each side with silicone spray when the housing and step are dry. Do not use oil or grease as a lubricant.

i When you close the sliding door just enough for the door lock to engage, the step remains extended for it to be cleaned.

PARKTRONIC sensors

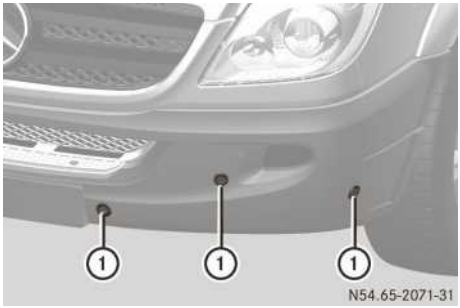

PARKTRONIC sensors (example: front bumper, left side of vehicle)

① Sensors

Clean all the sensors in the front and rear bumpers with water, shampoo and a soft cloth.

! Do not use dry, coarse or hard cloths and do not scrub. You will otherwise scratch or damage the sensors.

If you clean the sensors with a high-pressure cleaner or steam cleaner, observe the information provided by the manufacturer regarding the distance to be maintained between the vehicle and the nozzle of the high-pressure cleaner.

Reversing camera lens

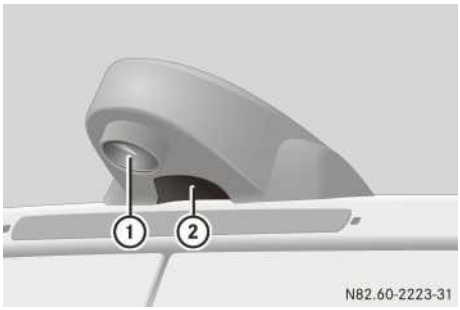

Reversing camera in the middle of the roof above the third brake lamp

① Reversing camera lens

② Microphone openings

Make sure not to put any wax on the lens of reversing camera ① when waxing the vehicle. If necessary, remove the wax using water, shampoo and a soft cloth.

! Do not use dry, coarse or hard cloths and do not scrub. You could otherwise scratch or damage the lens of the reversing camera.

When cleaning the vehicle with a high-pressure or steam cleaner, observe a minimum distance of 50 cm to the reversing camera.

To avoid damaging the reversing camera, do not aim directly at the reversing camera or the microphone openings on the bottom of the reversing camera.

Outside of the windscreen and wiper blades

⚠ **WARNING**

Before cleaning the windscreen or wiper blades, turn the key to **0** in the ignition lock. The windscreen wipers may otherwise move and injure you.

▶ Turn the key to position **0** in the ignition lock or remove it.

! Do not fold the windscreen wipers away from the windscreen unless the bonnet is closed. Otherwise, you could damage the bonnet.

▶ Fold the wiper arms away from the windscreen until you feel them engage.

▶ Clean the windscreen and the wiper blades.

▶ Fold the windscreen wipers back again before switching on the ignition.

Headlamps

Wipe the headlamp lenses with a wet sponge.

! Only use washer fluid which is suitable for plastic lamp lenses. Unsuitable washer fluid could damage the plastic lamp lenses of the headlamps.

Therefore, do not use:

- dry cloths
- abrasive products
- solvents
- cleaning products containing solvents

You could otherwise scratch or damage the surface of the lenses.

Sliding door

Clean the contact plates and the tips of the contact pins around the sliding door with water, shampoo and a soft cloth.

Do not oil or grease the contact plates and contact pins.

Remove foreign objects.

High-pressure cleaners

! Maintain the following minimum distances between the high-pressure nozzle and the object being cleaned:

- about 70 cm when using round-jet nozzles
- about 30 cm when using 25° flat-spray jets and concentrated-power jets

Keep the water jet moving while cleaning. To avoid causing damage, do not point the water jet directly at:

- door joints
- air spring bellows
- brake hoses
- electrical components
- plug connections
- seals
- the drive train, especially not at the intermediate bearing of the propeller shaft
- the reversing camera or the microphone opening on the bottom of the reversing camera. Keep a minimum distance of 50 cm

⚠ WARNING

Pulsating round-spray jets can lead to damage to the substructure of tyres which is not externally visible. Damage of this type will not be noticed until much later, and can lead to tyres bursting. This could cause you to lose control of your vehicle, resulting in an accident and injuries to yourself or others.

Do not use high-pressure cleaners with round-spray jets to clean the tyres. Have damaged tyres replaced immediately.

Automatic car wash

If the vehicle is very dirty, prewash it before you put it through an automatic car wash.

⚠ WARNING

If a wax preservative is applied after the vehicle is washed, you should remove the wax from the windscreen and the wiper blades to prevent smearing. Smears impair the driver's view, and their effect is made worse in conditions where visibility is poor (e.g. glare, mist, darkness, snow). You may therefore fail to recognise dangers, or not recognise them in time, and thereby cause an accident.

! Make sure that the automatic car wash is suitable for the size of the vehicle.

Before washing the vehicle in an automatic car wash, fold in the exterior mirrors and remove the radio/telephone aerial. Otherwise, the exterior mirror, aerial or the vehicle itself could be damaged.

Make sure that the aerial is fitted and that the exterior mirrors are fully folded out again when you leave the automatic car wash.

! Make sure that the side windows are completely closed, that the ventilation/heater blower is fully turned off and that the windscreen wiper switch is set to **0**. Otherwise, the rain/light sensor may be activated, triggering unintended wiper movements. This could cause damage to the vehicle.

After putting the vehicle through an automatic car wash, wipe off wax from:

- the reversing camera lens (▷ page 195)
- the windscreen and the wiper blades. This prevents smears and reduces wiping noise which can be caused by residue on the windscreen.

Cleaning the engine

! Water must not enter intake or ventilation openings. When cleaning with high pressure water or steam cleaners, the spray must not be aimed directly at electrical components or the terminals of electrical lines.

Preserve the engine after the engine has been cleaned. Protect the belt drive system from exposure to the preservative agent.

Light-alloy wheels

Clean the light-alloy wheels regularly.

! Do not use any acidic or alkaline cleaning agents. They can cause corrosion on the wheel bolts (wheel nuts) or the retainer springs for the wheel-balancing weights.

After driving off-road or on construction sites

⚠ **WARNING**

Contamination and dirt on the vehicle jeopardise the road safety and operational reliability of the vehicle.

In particular, the following hazards may occur:

Stone impact: stones trapped between the tyres may be thrown up while driving. Other road users may be injured or vehicles (in particular the windscreen) could be damaged.

Risk of skidding: dirt and mud on the tyres/on the road surface reduce road grip. This is especially the case on wet road surfaces. This could cause your vehicle to start to skid.

Risk of injury: dirt and mud on access steps and entrances lead to a reduction in the safety of the footing. This could cause you to slip from the steps and injure yourself.

For this reason, you should always clean your vehicle carefully after driving on rough terrain or building sites before you use the vehicle on public roads again. Should you use a high-pressure cleaner or a washing facility for this, make sure you observe the relevant safety advice in this section.

▶ Clean the vehicle, paying special attention to the following:
- lighting system
- windows, side windows and exterior mirrors
- access steps and entrances
- grab handles
- wheels, tyres and wheel arches
- licence plates

▶ Remove any trapped foreign objects, e.g. stones.

▶ Check the wheel suspension for damage.

⚠ **WARNING**

Dirt on the brake discs and brake pads/linings can impair braking performance (up to the point of total failure). This could lead to an accident. Before driving the vehicle on public roads, check the operating safety of the service brake by testing the brakes.

In the event of impaired braking performance, stop the vehicle while paying attention to the traffic conditions and contact a qualified specialist workshop.

After driving in mud, sand, water or in similar conditions:

- check the operating safety of the service brake.
- clean the wheels, chassis and brake system.
- check the wheels, chassis and brake system for damage. Have any damage repaired at a qualified specialist workshop.

Maintenance

General notes

The scope and regularity of the maintenance work primarily depend on the often diverse operating conditions.

The vehicle Maintenance Booklet describes the scope and frequency of maintenance work and contains additional notes on the warranty and on service products.

Specialist knowledge beyond the scope of these Operating Instructions is required when carrying out testing and maintenance work. These tasks may only be carried out by trained personnel.

ⓘ Maintenance services must be carried out in accordance with the provisions and recommendations in the Maintenance Booklet.

Not doing so could void any warranty claims and lead to refusal of goodwill gestures after the manufacturer has submitted a damage report.

⚠ **WARNING**

Before carrying out maintenance measures and repairs, you must read the following documents relating to maintenance measures and repairs:

- relevant sections of the technical documentation such as the operating instructions and workshop information
- legal stipulations such as work safety regulations and accident prevention regulations

You might otherwise be unaware of certain dangers and thus risk injuring yourself and others.

When carrying out work underneath the vehicle, you must secure the vehicle using stands with sufficient load-bearing capacity.

Under no circumstances should a jack be used instead. The jack could yield and the vehicle drop. This could cause serious injury to you and others.

The vehicle's jack is intended only to raise the vehicle for a short time.

Always have maintenance work carried out at a qualified specialist workshop.

Observe the notes on parts in the "Technical data" section (▷ page 288).

Environmental note

Observe measures to protect the environment when working on the vehicle. You must observe the legal requirements when disposing of service products, e.g. engine oil. This also includes all components, e.g. filters, which have come into contact with service products. Any qualified specialist workshop can provide information about this.

Dispose of empty containers, cleaning cloths and care products in an environmentally-responsible manner. Comply with the instructions for use of the care products.

Do not run the engine for longer than necessary when the vehicle is stationary.

Service interval display

General notes

A service that is due is displayed in the service interval display about a month or 3000 km in advance. A message is then displayed while the vehicle is in motion or when the ignition is switched on.

ⓘ The service interval display does not provide information about the oil level. The service interval display should therefore

not be confused with the engine oil level display.

The service due date is displayed in days or kilometres, depending on the total distance driven.

The symbols or letters in the service indicator show the service due.

or A for a minor service

or B for a major service

Service due date indicator

Vehicles with steering wheel buttons

The following messages may be displayed:

- Service A in ... days
- Service A in ... km
- Service A due now

Vehicles without steering wheel buttons

The following messages may be displayed:

- for service A
- for service B

Additionally you will see the remaining distance in kilometres (km) or the remaining time in days (d).

Service due date exceeded

A qualified specialist workshop can reset the service indicator when the service has been carried out.

Vehicles with steering wheel buttons

If you have missed the service due date, one of the following messages appears in the display:

- Service A overdue by ... days
- Service A overdue by ... km

A warning tone also sounds.

Vehicles without steering wheel buttons

If the service due date has been exceeded, ten seconds after switching on the ignition the or symbol flashes for the service. You will also see a minus sign before the service due date.

Calling up the service due date

▶ Turn the key to position **2** in the ignition lock.
The display is activated.

Vehicles with steering wheel buttons

▶ Press the or button on the steering wheel repeatedly until you see the standard display (▷ page 85).

▶ Press the or button on the steering wheel repeatedly until you see the following in the display, for example:

- Service A in ... days
- Service A in ... km

Vehicles without steering wheel buttons

▶ Press the Ⓜ menu button on the instrument cluster repeatedly until the or symbol for the service appears.
Additionally you will see the remaining distance in kilometres (km) or the remaining time in days (d).

ASSYST (Active Service System)

On vehicles with ASSYST, you are informed when the next service is due depending on the distance covered and driving style.

The time between individual service due dates can be extended by:

- driving with care and at moderate engine speeds
- avoiding short journeys where the engine does not reach its operating temperature

Periods when the battery is disconnected will not be recorded by ASSYST. To make sure that you have the vehicle serviced at the correct time, you should therefore subtract periods when the battery is disconnected from the days shown.

Bonnet

Opening the bonnet

⚠ WARNING

Do not pull the release lever while the vehicle is in motion. If you do so, the bonnet may open up and block your view.

⚠ WARNING

There is a risk of injury if the bonnet is open, even if the engine is not running.

Some engine components can become very hot.

To avoid the risk of burns, only touch those components described in the Owner's Manual and observe the relevant safety notes.

⚠ WARNING

The radiator fan between the radiator and the engine can start automatically, even if the key has been removed from the ignition lock. Keep away from the area of rotation of the fan blades. You could otherwise be injured.

Vehicles with a petrol engine: the electronic ignition system operates with high voltages. For this reason, you must never touch the ignition system components (ignition coil, ignition cable, spark plug connector or test socket) while:

- the engine is running.
- the engine is being started.
- the ignition is switched on and the engine is being cranked by hand.

You could otherwise receive an electric shock and be severely or fatally injured.

Vehicles with a diesel engine: the electronic injector control operates with high voltages. For this reason, you must never touch injection system components while:

- the engine is running.
- the engine is being started.
- the ignition is switched on.

You could otherwise receive an electric shock and be severely or fatally injured.

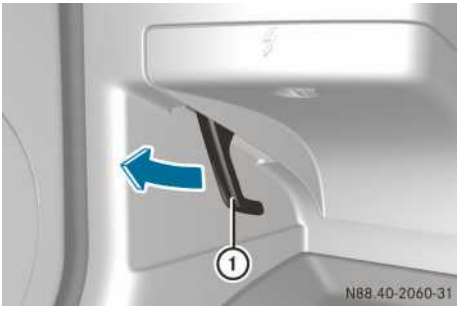

Bonnet release lever in the driver's footwell

▶ Pull release handle ①.
The bonnet is released.

! Make sure that the windscreen wipers are not folded away from the windscreen. Otherwise, you could damage the windscreen wipers or the bonnet.

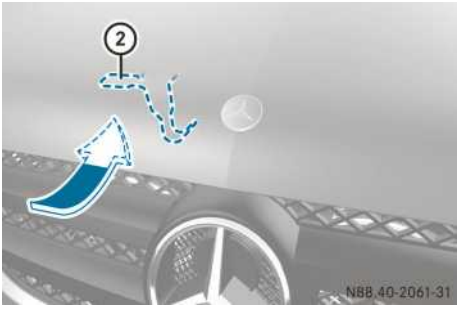

▶ Push bonnet catch release handle ② upwards.

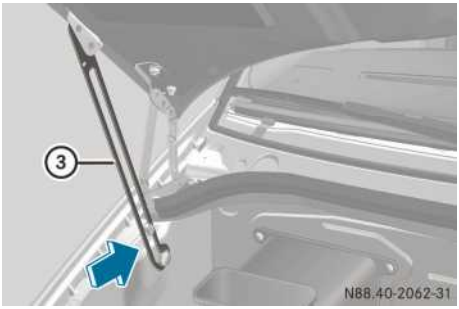

▶ Swing the bonnet upwards until support strut ③ engages and the bonnet is supported.

Closing the bonnet

⚠ WARNING

Make sure that nobody can become trapped as you close the bonnet.

- ▶ Lift the bonnet slightly.
- ▶ Press support strut ③ towards the back.

! When you press the support strut back, make sure that you do not press it against the detent position and cause it to bend.

- ▶ Lower the bonnet and let it drop shut from a height of approximately 30 cm.

  The bonnet engages audibly. If the bonnet can be raised slightly, it is not properly engaged.
- ▶ If the bonnet is not properly engaged, open it once more and allow it to drop shut from a slightly greater height.

! Do not use your hands to push the bonnet down. You could damage it otherwise.

Maintenance points under the bonnet

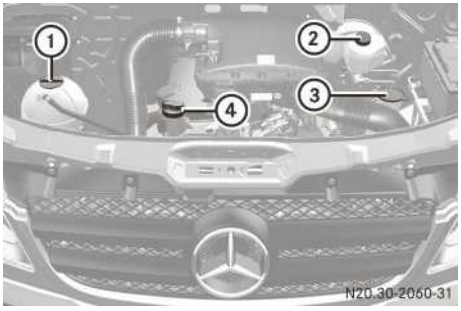

Example: maintenance points

① Coolant expansion tank cap (▷ page 201)
② Brake fluid reservoir cap (▷ page 202)
③ Washer fluid reservoir cap (▷ page 202)
④ Engine oil filler neck cap (▷ page 203)

Coolant level

Only top up the coolant with the vehicle standing on a level surface and with the engine switched off. The coolant temperature must be below 50 °C.



⚠ WARNING

When opening the coolant expansion tank, there is a risk of scalding from hot coolant spraying out. The engine cooling system and the coolant expansion tank are pressurised when the engine is at normal operating temperature. Wear gloves and eye protection.

Only open the coolant expansion tank when the coolant temperature is below 50 °C.

⚠ WARNING

Coolant contains glycol and is therefore toxic. Do not swallow the coolant. See a doctor immediately if you swallow coolant.

Make sure that coolant does not come into contact with skin, eyes or clothing. In case of contact with eyes, rinse immediately with plenty of clean water. Clean affected areas of skin and clothing with soap and water immediately. Change any affected clothing immediately.

- ▶ Slowly turn cap ① anti-clockwise and allow the excess pressure to escape.
- ▶ Turn cap ① further and remove it.
- ▶ Top up the coolant until it is at the **MAX** mark. Observe the correct coolant mixture

ratio and the required water quality (▷ page 188).

▶ Replace cap ① and tighten it until the stop.

! Check the engine cooling and heating system regularly for leaks.

If a large quantity of coolant is lost, have the cause traced and rectified at a qualified specialist workshop.

Clutch system and brake system

⚠ **WARNING**

Brake fluid is hazardous to health. Do not swallow brake fluid. See a doctor immediately if you swallow brake fluid.

Make sure that brake fluid does not come into contact with skin, clothing or eyes. Rinse affected areas with plenty of clean water and consult a doctor if necessary.

Always wear gloves and eye protection when topping up brake fluid.

Store brake fluid only in the original closed container and keep it out of the reach of children. Comply with safety regulations when handling brake fluid.

⚠ **WARNING**

If the boiling point of the brake fluid is too low, vapour pockets may form in the brake system when the brakes are subjected to a heavy load (e.g. on long downhill stretches). This would impair braking efficiency. The vehicle's stopping distance may then be longer. This increases the risk of an accident.

Have the brake fluid renewed every 2 years.

The clutch mechanism and the brake system are operated hydraulically using brake fluid. The expansion tank is located in the engine compartment.

Check the brake fluid level:

- regularly, e.g. weekly or when refuelling
- only with the vehicle standing on a level surface and with the engine switched off

! Brake fluid corrodes paint, plastic and rubber. If brake fluid comes into contact with paint, plastic or rubber, rinse with water immediately.

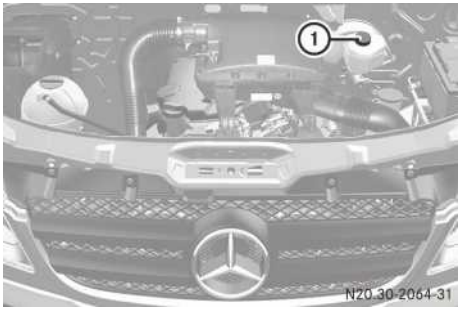

① Brake fluid reservoir cap

The brake fluid level must be between the **MIN** and **MAX** marks.

! If the brake fluid does not reach the **MIN** mark, the vehicle's hydraulic system could be faulty. Do not top up the brake fluid under any circumstances. This will not rectify the malfunction.

Do not drive any further. Have the system checked immediately at a qualified specialist workshop.

ⓘ There is usually a notice in the engine compartment to remind you when the next brake fluid change is due.

Windscreen washer system

⚠ **WARNING**

Windscreen washer concentrate is highly flammable.

Fire, naked flames and smoking are therefore prohibited when you are handling windscreen washer concentrate.

Add windscreen washer concentrate to the washer fluid all year round.

! Only use washer fluid concentrate which is suitable for plastic lamp lenses. Unsuitable washer fluid concentrate could dam-

age the plastic lamp lenses of the headlamps.

Adapt the mixing ratio to the outside temperatures. If the temperature is above freezing, use Summerwash to prevent smearing. If there is a risk of frost, use Winterwash to prevent the water from freezing on the windscreen.

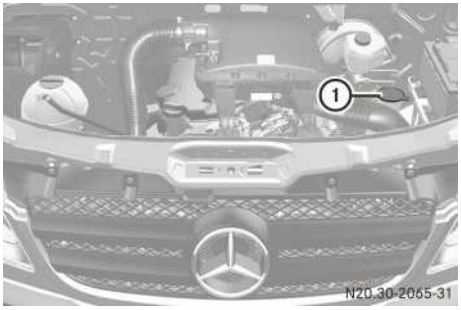

The washer fluid reservoir has a capacity of approximately 6 litres.

- ▶ Mix the washer fluid to the appropriate mixing ratio in a container beforehand.
- ▶ Remove washer fluid reservoir cap ①.
- ▶ Top up with washer fluid.
- ▶ Replace cap ①.

Engine oil level

General notes

You will find information about engine oil consumption in the "Driving tips" section (▷ page 174).

Check the engine oil level on a regular basis, e.g. weekly or each time you refuel.

Checking the engine oil level in the display

Depending on the vehicle's equipment, in vehicles with a diesel engine, the engine oil level is shown in the display.

Only check the engine oil level when the engine is at operating temperature.

- ▶ Park the vehicle on a level surface.
- ▶ Switch off the engine.
- ▶ Wait for five minutes.
- ▶ Turn the key to position **2** in the ignition lock.
  The display is activated.

ⓘ If at extremely low temperatures no engine oil level is displayed after five minutes, repeat the engine oil level check after five minutes.

If an oil level reading is still not displayed, check the engine oil level with the dipstick.

Have the oil level display checked at a qualified specialist workshop.

Vehicles without steering wheel buttons

- ▶ Press the Ⓜ menu button on the instrument cluster repeatedly until the display shows the symbol.
  The `--:--` display flashes while the oil level is being measured.

The following messages may be displayed:

OK	▶ Do not top up oil.
- 1.0 ltr - 1.5 ltr - 2.0 ltr	▶ Top up with the amount of oil shown (▷ page 205). ▶ Check the engine oil level again after a few minutes.
HI	▶ Have excess oil removed. The oil level is too high.

Vehicles with steering wheel buttons

- ▶ Press the button on the instrument cluster (▷ page 79).
  The following message is displayed for the duration of the measurement process:

Engine oil level Measuring in progress

The following messages may be displayed:

Engine oil level OK	▶ Do not top up oil.
Engine oil Add 1.0 litre Engine oil Add 1.5 litres Engine oil Add 2.0 litres	▶ Top up with the amount of oil shown (▷ page 205). ▶ Check the engine oil level again after a few minutes.
Engine oil level Reduce oil level	▶ Have excess oil removed. The oil level is too high.
Eng. oil lev. Turn ignition on for level	▶ Turn the key to position **2** in the ignition lock.
Observe wait. period	▶ Repeat the measurement after about five minutes if the engine is at normal operating temperature. ▶ Repeat the measurement after about 30 minutes if the engine is not at normal operating temperature.
Engine oil level Not when eng. running	▶ Switch off the engine and wait for approximately five minutes if the engine is at normal operating temperature. Then, perform the measurement.

Checking the engine oil level using the dipstick

Only check the engine oil level when the engine is at operating temperature.

▶ Park the vehicle on a level surface.

▶ Switch off the engine.

▶ Wait for five minutes.

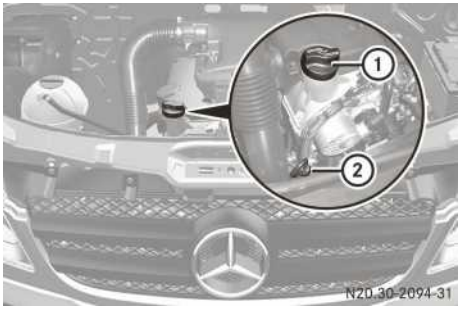

OM646 4-cylinder diesel engine

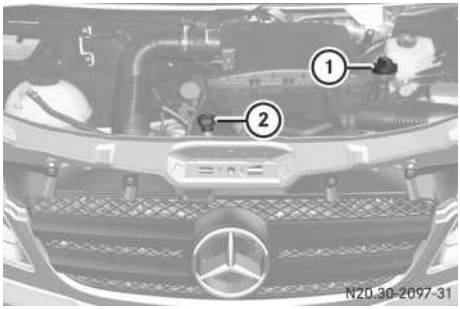

OM651 4-cylinder diesel engine

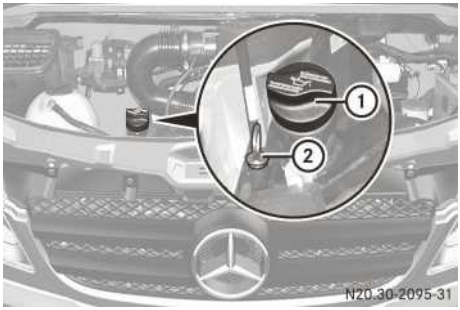

6-cylinder diesel engine

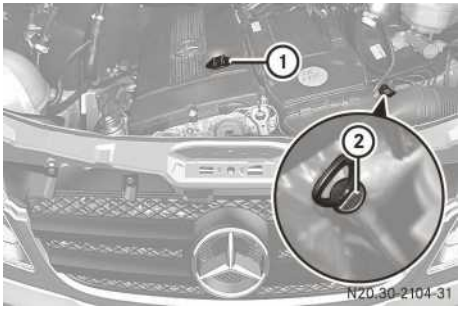

4-cylinder petrol engine

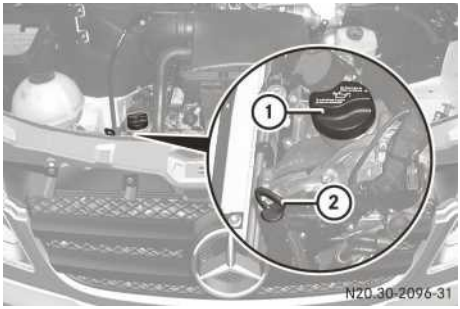

6-cylinder petrol engine

▶ Pull out oil dipstick ②.

▶ Wipe oil dipstick ② using a lint-free cloth.

▶ Reinsert oil dipstick ② into the dipstick tube to the stop and remove it again.

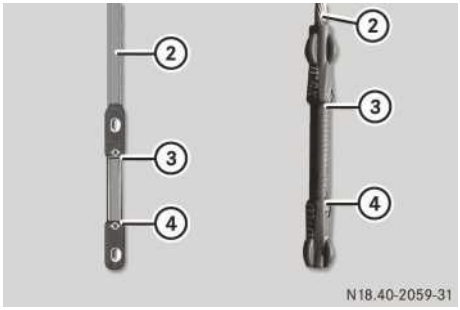

Oil dipstick for diesel and petrol engines

▶ Check the oil level on oil dipstick ②. The oil level must be between **MIN** mark ④ and **MAX** mark ③.

The difference in quantity between marks ③ and ④ on these vehicles is:

- approximately 2 litres on vehicles with a diesel engine
- approximately 3 litres on vehicles with a petrol engine

▶ Top up the engine oil if necessary.

Topping up the engine oil

You will find information about approved engine oils in the "Service products" section (▷ page 187) and in the Service Booklet.

▶ Unscrew cap ① of the filler neck and remove it.

! The alternator is located below the engine oil filler neck. If engine oil spills onto the alternator, there is a danger of alternator damage. Be very careful when topping up the engine oil.

▶ Top up with the amount of oil required.

! Do not add too much oil. If the oil level is above the **MAX** mark on the dipstick, too much oil has been added. This can lead to engine damage or catalytic converter damage. Have excess oil siphoned off.

Environmental note

When topping up the oil, take care not to spill any. If oil enters the soil or waterways, it is harmful to the environment.

▶ Fit cap ① on the filler neck and tighten.

Air filter for the rear-compartment air conditioning

An increased amount of sand or dust may collect in the air filter of the rear-compartment air conditioning when you drive on dusty or sandy roads.

! Check the air filters regularly for signs of contamination. Clean or replace a dirty fil-

ter mat. The dirt can otherwise lead to damage to the air-conditioning system.



Filter magazine, located on the roof in the rear compartment

- ▶ **To remove the filter mat:** carefully prise cover ① out of recesses ② and take off.
- ▶ Remove the filter mat from cover ①.
- ▶ **To clean the filter mat:** wash the filter mat with clean water.
- ▶ Leave the filter mat to dry.

ⓘ The filter mat must not be cleaned or dried in a machine.

- ▶ **To fit the filter mat:** insert the filter mat in cover ①.
- ▶ Replace cover ① and engage.

Vehicle assemblies

Check the assemblies regularly for leaks. If fluid is being lost (e.g. there are oil stains where the vehicle is parked), have the cause diagnosed and rectified immediately at a qualified specialist workshop.

Environmental note

Improper handling of service products is hazardous to the environment.

Do not allow service products to enter the sewage system, surface waters, ground water or soil.

Auxiliary heating

If you sell your vehicle, you are obliged to make the buyer aware of the following points. To this end, make sure that the new owner receives these Operating Instructions.

⚠ WARNING

Vehicles with an air heater:

The heat exchanger must be replaced after ten years in accordance with the national road traffic licensing regulations.

For safety reasons, Mercedes-Benz urgently recommends having the heat exchanger replaced after ten years in a qualified specialist workshop, which has the necessary specialist knowledge and tools to carry out the work required.

Mercedes-Benz recommends that you use a Mercedes-Benz Service Centre for this purpose. In particular, work relevant to safety or on safety-related systems must be carried out at a qualified specialist workshop.

Replacing the wiper blades

General safety notes

⚠ WARNING

If the windscreen wipers are set to intermittent wipe or the rain/light sensor is active, the windscreen wipers could start moving at any time and injure you or others.

Always remove the key from the ignition lock before replacing the wiper blades.

⚠ WARNING

Wiper blades are wear parts. Change the wiper blades every six months, ideally in the spring and autumn. Otherwise, the windscreen and rear window will not be wiped properly. This may prevent you from observing the traffic conditions, thereby causing an accident.

! Do not open the bonnet when a wiper arm is folded away from the windscreen. Otherwise, you could damage the bonnet.

Do not fold the wiper arms back onto the windscreen without wiper blades fitted as this could scratch the windscreen.

! Only hold the wiper blade by the arm. You could otherwise damage the wiper blade rubber.

Removing

- ▶ Apply the parking brake.
- ▶ On vehicles with automatic transmission, move the selector lever to position **P**.
- ▶ Remove the key from the ignition lock.

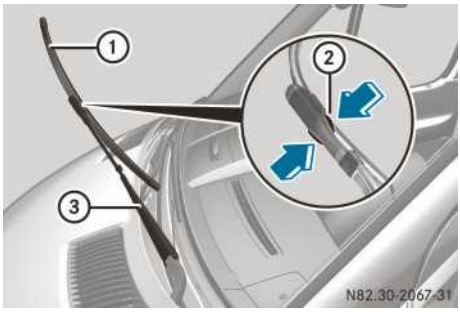

Front wiper arm with wiper blade

- ▶ Fold wiper arm ③ away from the windscreen.
- ▶ Set wiper blade ① at right angles to the wiper arm.
- ▶ Press both retaining clips ② together in the direction of the arrow and swing wiper blade ① away from wiper arm ③.
- ▶ Pull wiper blade ① up and out of the retainer on wiper arm ③.

Fitting

- ▶ Slide wiper blade ① into the retainer on wiper arm ③.
- ▶ Press wiper blade ① onto wiper arm ③ until you hear retaining clips ② engage.
- ▶ Fold wiper arm ③ onto the windscreen again.

Batteries

Important safety notes

⚠ **WARNING**



Risk of explosion. Explosive oxyhydrogen is produced when batteries are being charged. Only charge the batteries in a well-ventilated area.



Risk of explosion. Avoid creating sparks. Avoid fire, naked flames and do not smoke when handling the battery.



Battery acid is caustic. Wear acid-resistant protective gloves. Any splashes of acid on skin or clothing must be neutralised immediately using soapy water or acid neutraliser and then cleaned with water.



Wear eye protection. When mixing water and acid, the liquid may splash into your eyes. Rinse acid splashes to the eyes immediately with clean water and contact a doctor immediately.



Keep away from children. Children are not able to evaluate the risk involved

in handling batteries and acid.



Always observe the safety instructions, protective measures and procedures specified in these Operating Instructions when handling the battery.

Environmental note



Batteries contain pollutants. It is against the law to dispose of them along with household waste. They must be collected separately and recycled in an environmentally responsible manner.



Dispose of batteries appropriately. Take discharged batteries to a qualified specialist workshop, e.g. a Mercedes-Benz Service Centre, or to a special collection point for old batteries.

Transport and store full batteries in an upright position. When transporting batteries, secure them so that they do not tip over. Note that battery acid could escape from the ventilation openings in the stoppers into the environment.

In order for the batteries to achieve their maximum possible service life, they must always be sufficiently charged.

Have the battery charge checked more frequently if you use the vehicle mainly for short trips or if you leave it parked up for a lengthy period.

If you intend to leave your vehicle parked up for a long period, seek advice from a Mercedes-Benz Service Centre or switch off the electrical system using the battery main switch (▷ page 98).

Your vehicle may be equipped with two batteries, depending on the equipment version:

- a starter battery in the battery case in the driver's footwell
- additional battery in the engine compartment

Have the batteries removed at a qualified specialist workshop.

Disconnecting the battery

Important safety notes

⚠ WARNING

There is a risk of a short circuit if the positive terminal of the connected battery comes into contact with any part of the vehicle. This could cause the flammable gas mix to ignite. You and others could be seriously injured.

- Do not place any metal objects or tools on the batteries.
- When disconnecting the batteries, always disconnect the negative terminal clamp before the positive terminal clamp.
- When connecting the batteries, always connect the positive terminal clamp before the negative terminal clamp.
- Do not disconnect or connect the batteries when the engine is running.

! Switch off the engine and remove the key from the ignition lock before you loosen or disconnect the terminal clamps. You may otherwise destroy electronic components such as the alternator.

Always disconnect the starter battery in the battery case in the driver's footwell first.

! Always disconnect the battery in the order described below. Never mix up the terminal clamp disconnection/connection order and never mix up the terminal clamps. You may otherwise damage the vehicle electronics.

Disconnecting the starter battery

Removing/fitting the floor covering in the driver's footwell

The starter battery is located in the battery case in the driver's footwell.

▶ Switch off all electrical consumers.

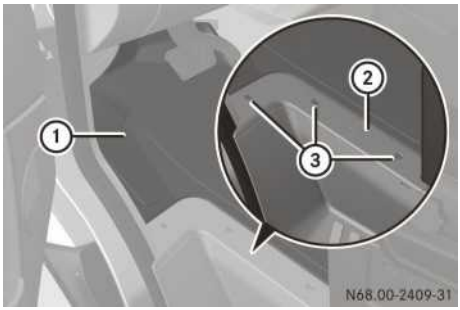

▶ **To remove:** remove screws ③ and take off trim ②.

▶ Remove floor covering ①.

▶ **To fit:** replace floor covering ① in the driver's footwell.

⚠ WARNING

Free movement of the pedals must not be impaired. This would otherwise jeopardise the operating and road safety of the vehicle.

Make sure that the floor covering is pushed under the carrier of the accelerator pedal and cannot slide between the carrier and the accelerator pedal when you install it.

This would otherwise prevent you from depressing the accelerator pedal completely, thereby restricting your vehicle's acceleration, e.g. during overtaking.

▶ Slide floor covering ① underneath the carrier for the accelerator pedal and align it at the base of the driver's seat and at the door sill.

Make sure that the floor covering does not obstruct the accelerator pedal.

▶ Put trim ② in place and screw the screws ③ back in.

Removing the battery cover in the driver's footwell

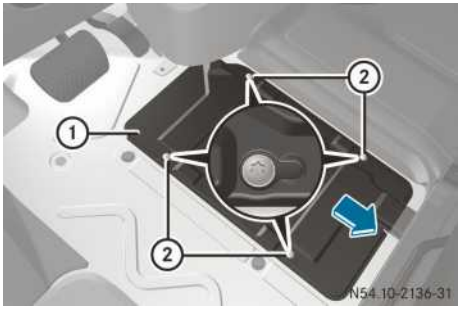

▶ Remove screws ② and slide cover ① in the direction of the arrow.
The screws must protrude beyond the recesses.

▶ Remove cover ① upwards.

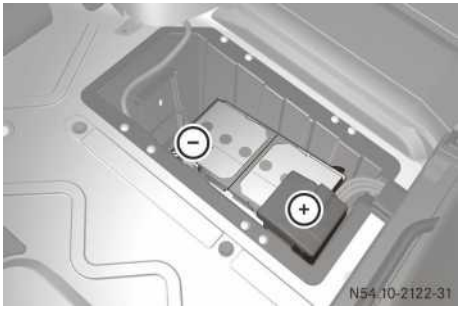

Starter battery in the driver's footwell

▶ First loosen and remove the negative terminal clamp so that it is no longer in contact with the terminal.

▶ Remove the cover from the positive terminal.

▶ Loosen the positive terminal clamp and fold it up to the side together with the pre-fuse box.

Disconnecting the additional battery

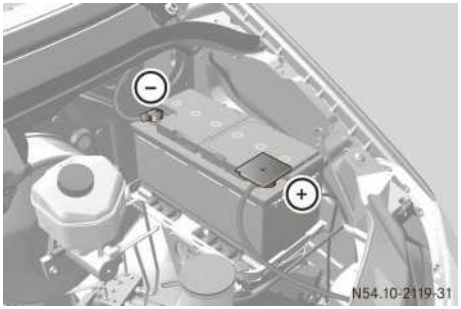

Additional battery in the engine compartment

- ▶ Switch off all electrical consumers.
- ▶ Remove the key from the ignition lock.
- ▶ Open the bonnet (▷ page 200).
- ▶ First loosen and remove the negative terminal clamp so that it is no longer in contact with the terminal.
- ▶ Remove the cover from the positive terminal.
- ▶ Loosen and remove the positive terminal clamp.

Removing the battery

Starter battery

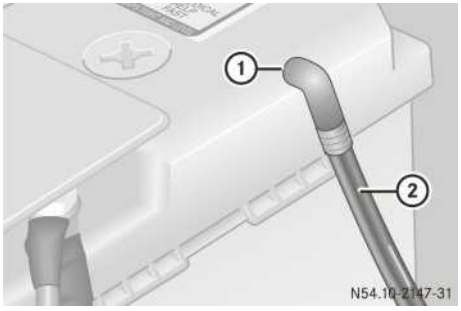

- ▶ Disconnect the battery (▷ page 209).
- ▶ Pull breather hose with connector bracket ② from connection ① on the degassing cover.

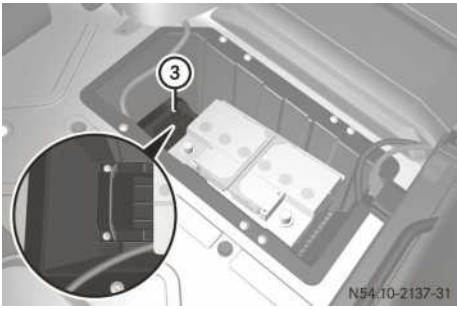

- ▶ Loosen the bolts holding retainer ③, which prevents the battery from moving around.

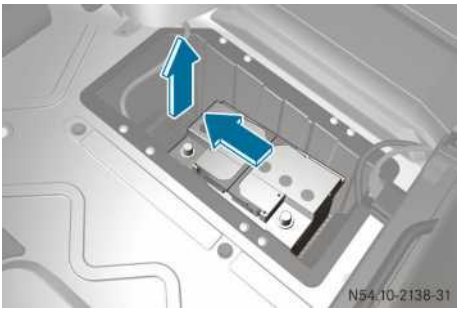

- ▶ Pull retainer ③ upwards and slide the battery out of its anchorage in the direction of travel.
- ▶ Fold the bar upwards and remove the battery from the battery case.

Additional battery in the engine compartment

- ▶ Disconnect the battery (▷ page 210).
- ▶ Loosen the bolts holding the retainer that prevents the battery from moving around.
- ▶ Remove the battery holder and take out the battery.

Charging the battery

⚠ WARNING

Only charge the battery in a well-ventilated area. As the battery is being charged, gases can escape and generate minor explosions, which can injure you and others or may cause

damage to the paintwork or acid corrosion on the vehicle.

There is a risk of acid burns during the charging process due to the gases which escape from the battery. Do not, therefore, lean over the battery while it is being recharged.

- ▶ Recharge the removed battery. Observe the notes in the operating instructions for your battery charger.
- ▶ Follow the above steps in the reverse order to install the battery again.

! Only charge the fitted battery with a battery charger that has been tested and approved by Mercedes-Benz. This device allows the battery to be charged when it is fitted in the vehicle. The vehicle's electronics system may otherwise be damaged.

i It is also possible to charge the starter battery using the jump-starting connection point in the engine compartment (▷ page 280).

Reconnecting the battery

! Always connect the battery in the order described below. Never mix up the terminal clamp disconnection/connection order and never mix up the terminal clamps. You may otherwise damage the vehicle electronics.

- ▶ Switch off all electrical consumers.
- ▶ Connect the positive terminal clamp.
- ▶ Attach the cover to the positive terminal.
- ▶ Connect the negative terminal clamp.

i After connecting the battery, you must reset the side windows (▷ page 68) and the electric sliding door (▷ page 62).

Battery care

! Please always observe the following notes:

- Dirty battery clamps and battery surfaces cause leak currents, which lead to the batteries discharging. Always keep the battery terminals and battery surfaces clean and dry. Grease the battery terminals, particularly the terminal undersides, with a light coating of acid-resistant grease.
- Cleaning agents containing fuel corrode the battery housing. Only clean the battery housing with commercially available cleaning agents.
- Only clean the batteries when the caps are screwed on. Dirt may otherwise enter the battery cells and damage the battery.
- The breathers in the caps and the cell ventilation tubes must be open. Otherwise, gas cannot escape. Unscrew blocked breathers and clean them with a suitable tool such as a piece of wire. If you do not unscrew the caps for cleaning, there is a risk of short circuit.
- Regularly check the battery terminals and the fastening of the negative cable to the chassis to ensure that they are firmly seated.
- If batteries are not being used, you should charge them once a month.

Useful information 214
Where will I find...? 214
Troubleshooting 219
Engine 255
Flat tyre 256
Electrical system 268
Batteries for the remote control 276
Opening/closing in an emergency .. 277
Automatic transmission 280
Jump-starting, tow-starting and towing away 280

Useful information

These Operating Instructions describe all models and standard and optional equipment of your vehicle that were available at the time of printing. Country-specific variations are possible. Note that your vehicle cannot be fitted with all of the described functions. This also applies to systems and functions relevant to safety.

Read the information on qualified specialist workshops: (▷ page 19).

Where will I find...?

Vehicle tool kit and emergency equipment

The jack and the vehicle tool kit are located in the co-driver's footwell.

⚠ WARNING

To reduce the risk of serious or fatal injuries and to avoid damage to the vehicle, observe the following:

- the jack is designed only to raise the vehicle for a short time, e.g. while a wheel is being changed.

  It is not designed to enable work to be carried out underneath the vehicle.
- the jack must be placed on a firm, level surface.
- never change a wheel on uphill or downhill gradients.
- never lie under the raised vehicle.
- make sure that no persons are present in the vehicle when the vehicle is raised.
- never start the engine when the vehicle is raised.
- make sure that the distance between the underside of the tyres and the ground does not exceed 30 mm.
- if you intend to work under the vehicle, place the vehicle on stands.

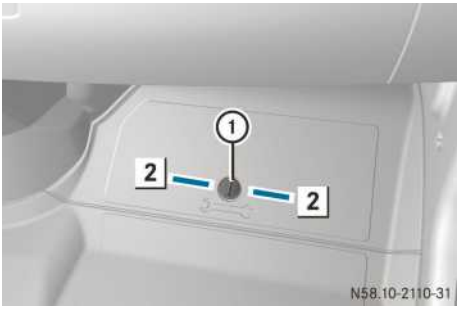

- ▶ **To unlock the cover:** turn quick-release lock ① anti-clockwise or clockwise 2.
- ▶ Remove the cover.
- ▶ **To lock the cover:** press quick-release lock ① down until it engages.

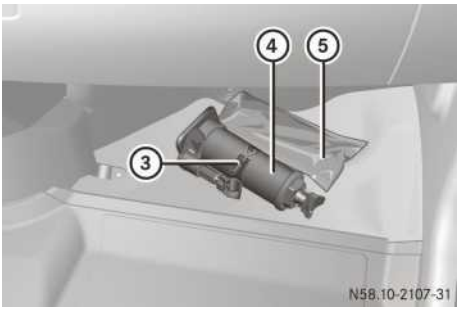

- ▶ Remove vehicle tool kit ⑤.
- ▶ Pull up quick-release lever ③ and unhook the retaining strap of jack ④.
- ▶ Lift jack ④ upwards out of the holder.

ⓘ When stowing away the jack, place it in the holder as shown in the illustration. Make sure that the retaining strap of the jack is hooked in and tensioned.

Warning triangle

The warning triangle, warning lamp and reflective safety vest are behind the cover in the stowage compartment of the driver's door.

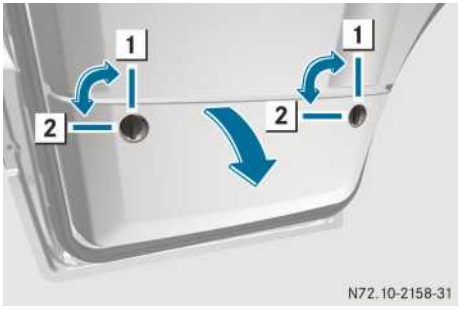

[1] Locked

[2] Unlocked

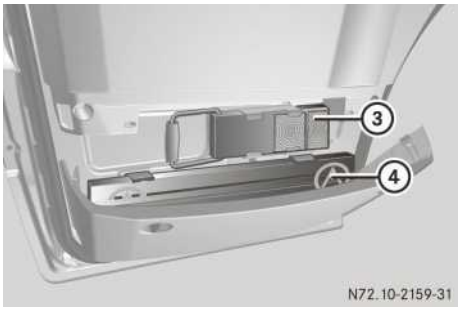

- Unlock quick-release fasteners [2] and fold out the cover.
- Take warning triangle ④, warning lamp ③ and the reflective safety vest out of the retainers.

Warning triangle

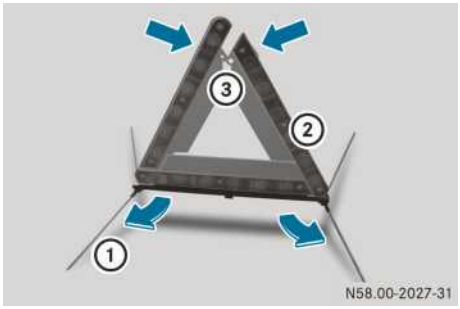

- **To set up:** fold stand ① out sideways from the bottom.
- Pull side reflectors ② upwards to form a triangle and lock them at the top using press-stud ③.

Wheel chock

Panel van/crewbus

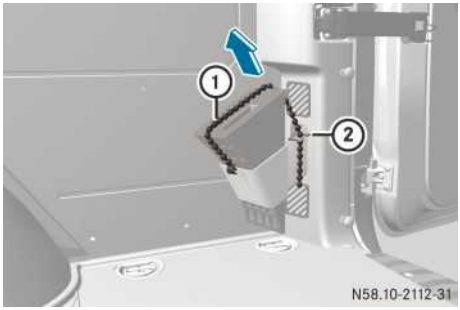

Wheel chock in the load/passenger compartment

- Pull restraining cable ① down slightly and then remove it from bracket ②.
- Remove the chock.

When stowing it away, make sure that the chock is secured in the retainer by the restraining cable.

Platform truck

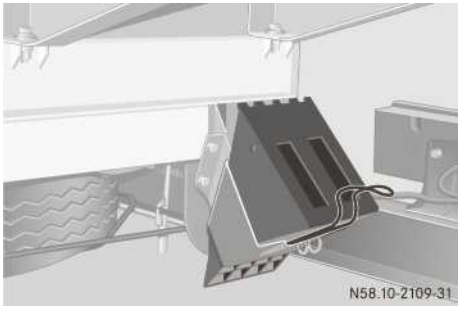

Wheel chock on the left-hand side of the vehicle

- Pull the retainer spring downwards and remove the chock.

When stowing it away, make sure that the chock is secured in the retainer by the retainer springs.

First-aid kit

The first-aid kit is located in the stowage compartment in the co-driver's door.

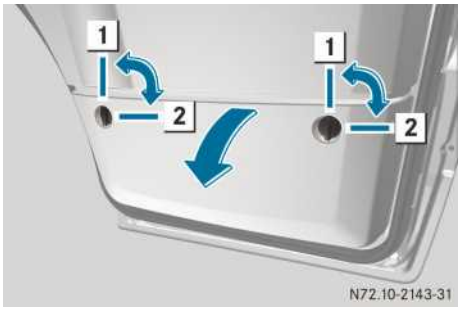

[1] Locked

[2] Unlocked

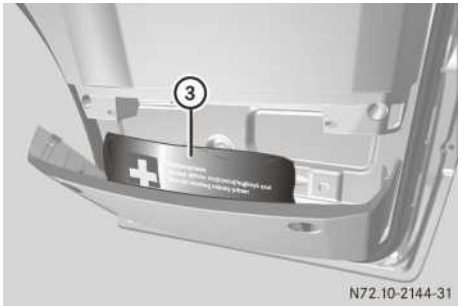

③ First-aid kit

▶ Unlock quick-release fasteners [2] and fold out the cover.

Check the expiry date of the first-aid kit annually, and replace the contents when necessary.

Fire extinguisher

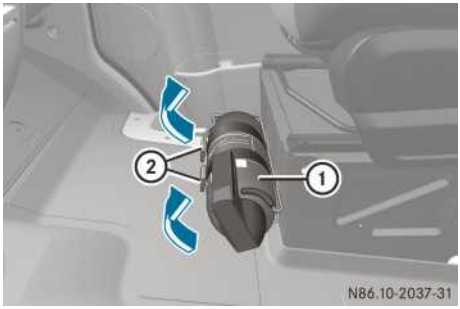

Fire extinguisher at the front of the base of the co-driver's seat

▶ Pull shackles ② upwards.

▶ Take fire extinguisher ① out of its holder.

Please read the instructions on the fire extinguisher carefully and familiarise yourself with its operation.

Tyre sealant

The Premium tyre sealant is located in the stowage compartment in the right-hand door sill.

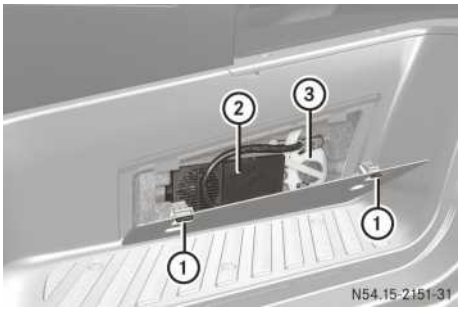

① Latching springs

② Electric air pump

③ Premium tyre sealant

Spare wheel

General notes

If you are replacing the tyres on the vehicle, you may use the spare wheel as a complete wheel provided that:

- the tyre is no more than six years old.
- the wheel and tyre are of the specified type.

The spare wheel is located in a spare wheel carrier under the rear of the vehicle.

! Check the spare wheel regularly to see that it is secure and has the prescribed tyre pressure.

Panel van/crewbus

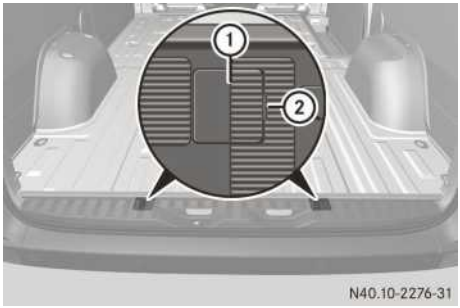

Bolt covers for the safety catches (example: panel van)

- ▶ Open the tailgate.
- ▶ Apply a screwdriver to recesses ② and then prise off covers ①.
- ▶ Using the wheel wrench from the vehicle tool kit (▷ page 214), unscrew the now visible bolts by approximately 20 turns anticlockwise.

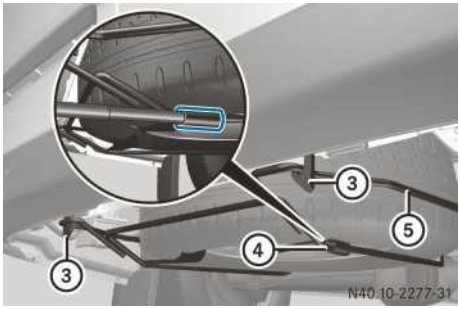

- ▶ Slightly raise spare wheel carrier ⑤ and unhook left-hand safety catch ③.
- ▶ Assemble the pump lever for the jack and slide it into sleeve ④ on spare wheel carrier ⑤.
- ▶ Raise spare wheel carrier ⑤ with the pump lever and unhook right-hand safety catch ③.
- ▶ Slowly lower spare wheel carrier ⑤ down to the ground.
- ▶ Lift spare wheel carrier ⑤ slightly and pull the pump lever out of sleeve ④.

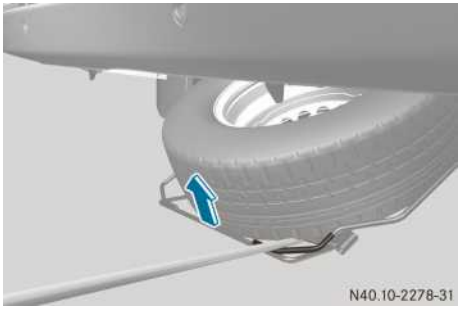

- ▶ Use the pump lever to lift the spare wheel beyond the rear edge of the spare wheel carrier.
- ▶ Carefully remove the spare wheel from the bracket.

⚠ WARNING

When the spare wheel is removed, the centre of gravity changes due to the heavy weight of the wheel. The spare wheel could slip off or tip and cause injury to yourself or others. Pull

the spare wheel out carefully. Take care not to trap your fingers when lifting out the spare wheel.

Platform truck

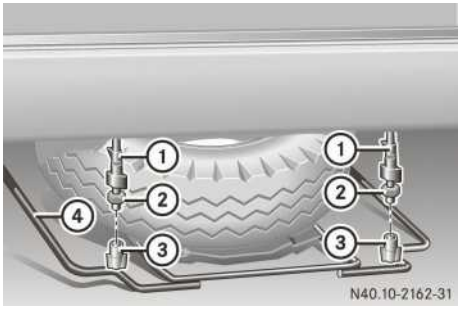

- ▶ Loosen wing nuts ③ manually and then remove them.
- ▶ Loosen nuts ② as far as the thread end.
- ▶ Slightly raise spare wheel carrier ④ and unhook left-hand safety catch ①.
- ▶ Assemble the pump lever for the jack and slide it into the sleeve on the right-hand side of spare wheel carrier ④.
- ▶ Raise spare wheel carrier ④ with the pump lever and unhook right-hand safety catch ①.
- ▶ Slowly lower spare wheel carrier ④ down to the ground.
- ▶ Lift spare wheel carrier ④ slightly and pull the pump lever out of the sleeve.

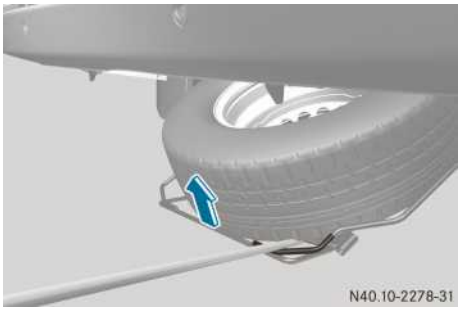

- ▶ Use the pump lever to lift the spare wheel beyond the rear edge of the spare wheel carrier.
- ▶ Carefully remove the spare wheel from the bracket.

⚠ WARNING

When the spare wheel is removed, the centre of gravity changes due to the heavy weight of the wheel. The spare wheel could slip off or tip and cause injury to yourself or others. Pull the spare wheel out carefully. Take care not to trap your fingers when lifting out the spare wheel.

Troubleshooting

Warning and indicator lamps in the instrument cluster

⚠ WARNING

If service work is not carried out correctly, the operating safety of your vehicle may be affected. This could cause you to lose control of your vehicle and cause an accident. Moreover, the safety systems may no longer be able to protect you or others as they are designed to do.

Always have service work carried out at a qualified specialist workshop.

Problem	Possible causes/consequences and ▶ Solutions
The yellow ASR/ESP® warning lamp flashes while the vehicle is in motion.	**⚠ Risk of accident** ESP® or ASR is intervening because at least one of the wheels has reached its tyre grip limit. Cruise control is deactivated for the duration of the intervention. ▶ Adapt your driving style to suit the road and traffic conditions. Do not use too much throttle. ▶ Drive slowly.
The yellow ASR/ESP® warning lamp flashes slowly while the vehicle is in motion.	**⚠ Risk of accident** On vehicles with all-wheel drive, the brake system has overheated. The performance of 4ETS is limited. Braking power may be reduced. ▶ Drive on carefully and adapt your driving style to suit the road and traffic conditions. ▶ When the message goes out, 4ETS and normal braking power are available again.
The yellow ASR/ESP® warning lamp is lit while the engine is running.	**⚠ Risk of accident** ASR is deactivated. ▶ Activate ASR again. Exceptions (▷ page 134).

Problem	Possible causes/consequences and ▶ Solutions
 The yellow ESP®, ABS and ASR/BAS indicator lamps and the red brake system indicator lamp light up while the engine is running.	⚠ **Risk of accident** EBD has malfunctioned. The rear wheels could lock sooner than expected when you apply the brakes. ▶ On vehicles with steering wheel buttons, also observe the messages in the display (▷ page 229). ▶ Stop the vehicle as soon as possible, paying attention to road and traffic conditions. ▶ Do not drive on. ▶ Consult a qualified specialist workshop.
 The yellow ESP®, ABS and ASR/BAS indicator lamps and the red brake system indicator lamp light up while the engine is running.	⚠ **Risk of accident** EBD has been deactivated due to undervoltage. The battery may not be being charged. The rear wheels could lock sooner than expected when you apply the brakes. ▶ On vehicles with steering wheel buttons, also observe the messages in the display (▷ page 229). ▶ Stop the vehicle as soon as possible, paying attention to road and traffic conditions. ▶ Do not drive on. ▶ Consult a qualified specialist workshop.
 The red brake system indicator lamp is lit while the engine is running. A warning tone also sounds.	⚠ **Risk of accident** There is insufficient brake fluid in the expansion tank. ▶ On vehicles with steering wheel buttons, also observe the messages in the display (▷ page 229). ▶ Stop the vehicle as soon as possible, paying attention to road and traffic conditions. ▶ Check the brake fluid level in the expansion tank (▷ page 202). ▶ If the brake fluid is below the MIN mark: do not drive on! ▶ Do not top up the brake fluid. This does not solve the problem. ▶ Consult a qualified specialist workshop.
 The yellow ASR/BAS indicator lamp is lit while the engine is running.	⚠ **Risk of accident** ASR or the starting-off aid (on vehicles with manual transmission) has been deactivated due to a malfunction. The engine power output may be reduced. ▶ Drive on with care. ▶ Consult a qualified specialist workshop as soon as possible.

Problem	Possible causes/consequences and ▶ Solutions
 The yellow ASR/BAS indicator lamp is lit while the engine is running.	⚠ **Risk of accident** BAS has been deactivated due to a malfunction. The brake system continues to function normally, but without electronic support. ▶ Drive on with care. ▶ Consult a qualified specialist workshop as soon as possible.
 The yellow ASR/BAS indicator lamp is lit while the engine is running.	⚠ **Risk of accident** ASR, BAS and the starting-off aid (on vehicles with manual transmission) have been deactivated due to undervoltage. The battery may not be being charged. The brake system is still available with the normal braking effect. ▶ Drive on with care. ▶ Visit a qualified specialist workshop immediately.
 The yellow ABS indicator lamp is lit while the engine is running.	⚠ **Risk of accident** ABS has been deactivated due to a malfunction. As a result, ESP®, ASR and BAS, as well as cruise control and SPEEDTRONIC, have also been deactivated. The brake system continues to function normally, but without electronic support. The wheels could therefore lock, e.g. if the brakes are applied with maximum force. ▶ On vehicles with steering wheel buttons, also observe the messages in the display (▷ page 229). ▶ Drive on with care. ▶ Visit a qualified specialist workshop immediately.
 The yellow ABS indicator lamp is lit while the engine is running.	⚠ **Risk of accident** ABS is temporarily unavailable. Self diagnosis may not have been completed yet. The brake system is still available with the normal braking effect. ▶ Drive on for a short distance at a speed of more than 20 km/h. ABS is available again if the message goes out.

Problem	Possible causes/consequences and ▶ Solutions
The yellow ABS indicator lamp is lit while the engine is running.	⚠ **Risk of accident** ABS has been deactivated due to undervoltage. The battery may not be being charged. The brake system continues to function normally, but without electronic support. The wheels could therefore lock, e.g. if the brakes are applied with maximum force. ▶ Drive on with care. ▶ Visit a qualified specialist workshop immediately.
The yellow ESP® indicator lamp is lit while the engine is running.	⚠ **Risk of accident** ESP® has been deactivated due to a malfunction. As a result, cruise control and SPEEDTRONIC have also been deactivated. The vehicle's stability is then no longer automatically regulated at an early stage. Engine power output may be reduced. ▶ On vehicles with steering wheel buttons, also observe the messages in the display (▷ page 229). ▶ Drive on with care. ▶ Consult a qualified specialist workshop as soon as possible.
The yellow ESP® indicator lamp is lit while the engine is running.	⚠ **Risk of accident** ESP® has been deactivated due to undervoltage. As a result, cruise control and SPEEDTRONIC have also been deactivated. The battery may not be being charged. The vehicle's stability is then no longer automatically regulated at an early stage. Engine power output may be reduced. ▶ Drive on with care. ▶ Consult a qualified specialist workshop as soon as possible.
SRS The red SRS warning lamp does not go out approximately 4 seconds after switching on the ignition, or it lights up again.	⚠ **Risk of injury** The restraint systems have malfunctioned. The airbags or belt tensioners could be triggered unintentionally, or not at all in the event of an accident. ▶ Drive on with care. ▶ Visit a qualified specialist workshop immediately.

Problem	Possible causes/consequences and ▶ Solutions
The red battery charge indicator lamp lights up while the engine is running.	⚠ **Risk of accident** The battery is not being charged. Possible causes are a defective alternator or a torn poly-V-belt. ▶ Stop the vehicle as soon as possible, paying attention to road and traffic conditions. ▶ Check the poly-V-belt. **If it is torn:** do not drive on. Consult the nearest qualified specialist workshop. **If it is not damaged:** have the vehicle checked at a qualified specialist workshop.
The red battery charge indicator lamp lights up while the engine is running.	⚠ **Risk of accident** The battery is faulty. ▶ Stop the vehicle as soon as possible, paying attention to road and traffic conditions. ▶ Do not continue driving under any circumstances. ▶ Contact a breakdown service, e.g. a Mercedes-Benz Service Centre.
The yellow brake pad wear indicator lamp lights up after the engine is started or while the vehicle is in motion.	⚠ **Risk of accident** The brake pads/linings have reached their wear limit. ▶ Have the brake pads/linings replaced as soon as possible at a qualified specialist workshop.
The yellow engine oil level warning lamp lights up after the engine is started or while the vehicle is in motion.	The oil level has dropped to the minimum level. ▶ Check the engine oil level and top up at the nearest filling station (▷ page 203). ▶ If there is visible oil loss from the engine, have the fault rectified immediately at a qualified specialist workshop.

Problem	Possible causes/consequences and ▶ Solutions
The yellow engine oil level warning lamp flashes, the display shows, for instance, the – 2.0 ltr oil level message and the warning buzzer sounds after the engine is started or while the vehicle is in motion[14].	There is not enough or no oil in the engine. There is a danger of engine damage. ▶ Stop the vehicle as soon as possible, paying attention to road and traffic conditions. ▶ Check the oil level using the dipstick (▷ page 204). **If the engine oil level is correct:** have the malfunction rectified immediately at a qualified specialist workshop. **If the engine oil level is too low:** have the vehicle towed to a qualified specialist workshop.
The yellow engine oil level warning lamp lights up, the display shows, for instance, the HI oil level display message and the warning buzzer sounds after the engine is started or while the vehicle is in motion[14].	The engine oil level is above the maximum level. ▶ Check the oil level. If the oil level is too high, have engine oil siphoned off at the nearest filling station (▷ page 205). You could otherwise damage the engine or the catalytic converter. If the oil level is correct, have the malfunction rectified as soon as possible at a qualified specialist workshop.
The yellow engine oil level warning lamp lights up repeatedly while the vehicle is in motion.	There is a malfunction in the engine oil level display. ▶ Have the vehicle checked immediately at a qualified specialist workshop.

[14] Only vehicles with a diesel engine.

Problem	Possible causes/consequences and ▶ Solutions
The yellow coolant level warning lamp lights up while the engine is running.	The coolant level is too low. Do not run the engine if the coolant level is too low. The engine could overheat and be damaged. ▶ Stop the vehicle as soon as possible, paying attention to road and traffic conditions. ▶ Switch off the engine and let it cool down. ▶ Top up the coolant; be sure to observe the warning notes (▷ page 201). ▶ If you need to top up the coolant frequently, have the engine cooling system checked at a qualified specialist workshop.
The red coolant warning lamp lights up while the engine is running.	The coolant temperature is too high. ▶ Stop the vehicle as soon as possible, paying attention to road and traffic conditions. ▶ Consult a qualified specialist workshop.
The red coolant warning lamp lights up while the engine is running.	The coolant temperature is too high. If the vehicle is stopped after being subjected to extreme loads, the coolant warning lamp may light up when the ignition is switched on or the engine is restarted. Driving in mountainous terrain or driving with a trailer are examples of such loads. ▶ Run the engine for approximately 1 minute at idling speed. ▶ Consult a qualified specialist workshop if the coolant warning lamp remains lit.
The yellow reserve fuel warning lamp lights up while driving.	The fuel level has fallen into the reserve range. ▶ Refuel at the nearest filling station (▷ page 175).
The yellow preglow indicator lamp lights up while the engine is running.	There is a malfunction in the preglow system. ▶ Consult a qualified specialist workshop.

Problem	Possible causes/consequences and ▶ Solutions
 The yellow diesel particle filter indicator lamp lights up while the engine is running.	The automatic regeneration of the diesel particle filter is insufficient or is malfunctioning. ▶ Drive at an engine speed above 2000rpm until the diesel particle filter indicator lamp goes out. If the diesel particle filter indicator lamp does not go out after approximately 20 minutes, have the malfunction rectified immediately at a qualified specialist workshop.
 The yellow engine diagnostic indicator lamp lights up or flashes while the engine is running.	The fuel tank is empty. The engine is running in emergency mode. ▶ Refuel at the nearest filling station (▷ page 175). ▶ **Vehicles with a diesel engine:** bleed the fuel system (▷ page 256). ▶ Start the engine three to four times in succession after refuelling. Emergency running mode will be cancelled. The vehicle does not need to be checked.
 The yellow engine diagnostic indicator lamp lights up or flashes while the engine is running.	There is a malfunction: • in the injection control • in the ignition system[15] • in the exhaust system The emission limit values may be exceeded and the engine is running in emergency mode. Engine power output may be reduced. ▶ Have the vehicle checked as soon as possible at a qualified specialist workshop. In some countries, it is legally prescribed that after the engine diagnostic indicator lamp lights up, you must contact a qualified specialist workshop immediately. Observe legal requirements.
 The yellow air filter indicator lamp lights up while the engine is running.	The service limit for the air filter has been reached. The air filter is dirty. ▶ Have the air filter element replaced at a qualified specialist workshop.

[15] Only on vehicles with a petrol engine.

Problem	Possible causes/consequences and ▶ Solutions
The yellow tyre pressure monitor warning lamp comes on.	⚠ **Risk of accident** The tyre pressure monitor indicates a rapid or severe loss of pressure in at least one tyre. ▶ Stop the vehicle without making any extreme steering manoeuvres or braking suddenly. Pay attention to the traffic conditions while doing so. ▶ Check the tyres and correct the tyre pressure. If a tyre continues to lose pressure, it must be replaced. Replace damaged tyres immediately. The warning lamp goes out after you have been driving for a few minutes with the fault rectified. ▶ On vehicles with steering wheel buttons, also observe the messages in the display (▷ page 229).
The yellow tyre pressure monitor warning lamp flashes for 60 seconds and then remains lit.	Vehicles without steering wheel buttons: The tyre pressure monitor has malfunctioned. ▶ Have the tyre pressure monitor and the wheels checked at a qualified specialist workshop.
The yellow water separator indicator lamp lights up when the ignition is switched on.	The water that has collected in the water separator has reached the maximum level. ▶ Drain the water separator (▷ page 255).
The yellow washer fluid level indicator lamp for the windscreen washer/headlamp cleaning system lights up after the engine is started or while the vehicle is in motion.	The washer fluid level is too low. ▶ Top up washer fluid (▷ page 202).

Problem	Possible causes/consequences and ▶ Solutions
When the key is turned to position **2** in the ignition lock, the red seat belt warning lamp lights up for approximately 6 seconds. A warning tone also sounds.	The warning lamp is to remind you to fasten your seat belt. ▶ Fasten the seat belt (▷ page 36).
When the key is turned to position **2** in the ignition lock, the yellow bulb warning lamp lights up.	One of the bulbs in the exterior lighting or on the trailer is faulty. ▶ Replace the faulty bulb as soon as possible (▷ page 268).
The yellow door indicator lamp lights up while you are driving.	The vehicle is moving without all doors or the bonnet being closed. ▶ Close the doors or bonnet.
The yellow door indicator lamp lights up.	The electrical step has retracted or extended only partially or not at all. ▶ Make sure that there is sufficient free space for the electrical step. ▶ Open or close the sliding door again. ▶ If the electrical step still does not extend or retract fully, push the step in manually (▷ page 279). Make passengers aware of the missing step before they exit the vehicle.
When the key is turned to position **2** in the ignition lock, the red ENR indicator lamp lights up.	A malfunction has caused ENR to switch off or be deactivated because, for example, external influences have caused the vehicle to be raised while stationary. The vehicle level is then no longer automatically regulated. Road handling and ride comfort may be impaired. ▶ Drive on for a short distance at a speed of more than 10 km/h. ENR is automatically activated. ▶ If the indicator lamp does not go out, drive on carefully and visit a qualified specialist workshop as soon as possible.

Problem	Possible causes/consequences and ▶ Solutions
The red ENR indicator lamp flashes while you are driving.	The vehicle level is too high or too low while you are driving. Road handling and ride comfort may be impaired. ▶ Drive on with care. ▶ ENR will adjust the vehicle level so that it returns to its normal level as soon as possible. ▶ If the lamp continues to flash, drive on carefully and visit a qualified specialist workshop as soon as possible. There may be a leak in an air bellow.
The yellow indicator lamp for the steering lights up while the ignition is on.	The power assistance for the steering has malfunctioned. You need to steer more forcefully. ▶ Carefully continue to a qualified specialist workshop and have the steering checked immediately.
The yellow indicator lamp for the clutch pedal lights up while the ignition is on.	You are attempting to start the engine and the clutch pedal is not completely depressed. ▶ Before starting the engine, depress the clutch pedal as far as it will go.

Notes on display messages

Important safety notes

⚠ WARNING

No information will be displayed if either the instrument cluster or the display is inoperative.

As a result, you will not be able to see warning and indicator lamps or information about the driving conditions, such as speed or outside temperature. Driving characteristics may be impaired. Adjust your driving style and vehicle speed accordingly.

Contact a qualified specialist workshop immediately.

⚠ WARNING

If service work is not carried out correctly, the operating safety of your vehicle may be affected. This could cause you to lose control of your vehicle and cause an accident. Moreover, the safety systems may no longer be able to protect you or others as they are designed to do.

Always have service work carried out at a qualified specialist workshop.

ⓘ If you turn the key to position **2** in the ignition lock, all warning/indicator lamps (except the turn signal indicator lamps) and the display are activated. Please make sure that they are working properly before commencing a journey.

Vehicles without steering wheel buttons

Warnings, malfunctions or additional information may also be shown in the display. The

following tables show all the display messages. For certain display messages, a warning tone or a continuous tone will also sound.

Vehicles with steering wheel buttons

The on-board computer shows warnings, malfunctions or additional information in the display. For certain display messages, a warning tone or a continuous tone will also sound. Display messages of a high priority are shown in red.

Please respond in accordance with the display messages and follow the additional notes in these Operating Instructions.

You can hide low-priority display messages using the , ,  or  button on the multifunction steering wheel or the reset button on the instrument cluster.

You cannot hide display messages of the highest priority. These messages will continue to be shown in the display until their cause has been eliminated.

The on-board computer stores certain display messages in the **message memory** (▷ page 87).

The following tables show all the display messages. They are divided into alphabetically sorted text messages (▷ page 232) and symbol messages (▷ page 235).

Display messages

Display messages on vehicles without steering wheel buttons

Display messages	Possible causes/consequences and ▶ Solutions
... LIM km/h	You are accelerating up to the speed stored for permanent SPEEDTRONIC using the accelerator pedal. SPEEDTRONIC controls the speed and the vehicle stops accelerating. ▶ Ease off the accelerator pedal.
... LIM km/h	The speed display flashes. You are attempting to set a speed for variable SPEEDTRONIC that is less than the current speed of the vehicle. ▶ Apply the brakes yourself as required.
... LIM km/h	The speed display flashes. The vehicle has exceeded the speed set for variable SPEEDTRONIC or the programmed maximum speed for permanent SPEEDTRONIC, e.g. on a steep downhill gradient (overrun mode). ▶ Apply the brakes yourself as required.
... LIM km/h	The display message flashes and a warning tone sounds three times. The vehicle is accelerating and moving faster than the speed set for variable SPEEDTRONIC or the programmed maximum speed for permanent SPEEDTRONIC. ▶ Apply the brakes yourself as required.
_ _ _ LIM km/h	SPEEDTRONIC and/or cruise control have been deactivated due to a fault. ▶ Apply the brakes yourself as required. ▶ Have SPEEDTRONIC and cruise control checked at a qualified specialist workshop.
NO TPMS	The NO message is displayed for 30 seconds. The TPMS message is also displayed after 30 seconds. The tyre pressure monitor has malfunctioned. ▶ Have the tyre pressure monitor and the wheels checked at a qualified specialist workshop.

Display messages	Possible causes/consequences and ▶ Solutions
NO TPMS	The NO message is displayed for 30 seconds. The TPMS message is also displayed after 30 seconds. The tyre pressure monitor is not receiving signals from one or more wheels because: • a wheel has been replaced with the spare wheel without wheel electronics. • the maximum temperature on one of the wheel electronics units has been exceeded. • a wheel electronics unit is malfunctioning. ▶ Have wheels with suitable wheel electronics units fitted at a qualified specialist workshop.
— TPMS	The — message is displayed for 30 seconds. The TPMS message is also displayed after 30 seconds. The pressure in one or more tyres is too low or there is a significant difference between tyre pressures on individual wheels. ▶ Check the tyre pressure at the next opportunity and correct it if necessary (▷ page 290).

Text messages on vehicles with steering wheel buttons

Display messages	Possible causes/consequences and ▶ Solutions
Exhaust filter: Drive at high engine speed. See Owner's Manual.	The automatic regeneration of the diesel particle filter is not sufficient or has malfunctioned. ▶ Drive at an engine speed of above 2000 rpm until the display message disappears. If the display message does not go out after approximately 20 minutes, have the malfunction rectified immediately at a qualified specialist workshop.
ABS Visit workshop	⚠ **Risk of accident** ABS has been deactivated due to a malfunction. ESP®, ASR and BAS, as well as cruise control and SPEEDTRONIC have also been deactivated as a result. The brake system is still available with complete brake boosting effect but without ABS. ▶ Drive on with care. ▶ Visit a qualified specialist workshop immediately.

Display messages	Possible causes/consequences and ▶ Solutions
ABS Unavailable	⚠ **Risk of accident** ABS is temporarily unavailable. Self diagnosis may not have been completed yet. The brake system is still available with the normal braking effect. ▶ Drive on for a short distance at a speed of more than 20 km/h. ABS is available again if the display message goes out.
ABS Unavailable	⚠ **Risk of accident** ABS has been deactivated due to undervoltage. It is possible that the battery is not being charged. The brake system is still available with the normal braking effect. ▶ Drive on with care. ▶ Visit a qualified specialist workshop immediately.
ESP Visit workshop	⚠ **Risk of accident** ESP® has been deactivated due to a malfunction. Cruise control and SPEEDTRONIC have also been deactivated as a result. The vehicle's stability is no longer automatically regulated at an early stage. Engine power output may be reduced. ▶ Drive on with care. ▶ Visit a qualified specialist workshop immediately.
ESP Unavailable	ESP® has been deactivated due to undervoltage. Cruise control and SPEEDTRONIC have also been deactivated as a result. It is possible that the battery is not being charged. The vehicle's stability is no longer automatically regulated at an early stage. Engine power output may be reduced. ▶ Drive on with care. ▶ Visit a qualified specialist workshop as soon as possible.
Speed limit ... km/h	The speed display flashes. You are attempting to set a speed for variable SPEEDTRONIC that is less than the current speed of the vehicle. ▶ Apply the brakes yourself as required.
Speed limit ... km/h	The speed display flashes. The vehicle has exceeded the speed set for variable SPEEDTRONIC, e.g. on a steep downhill gradient (overrun mode). ▶ Apply the brakes yourself as required.

Display messages	Possible causes/consequences and ▶ Solutions
Speed limit ... km/h exceeded	The speed display flashes and a warning tone sounds three times. The vehicle is accelerating and exceeds the speed set for variable SPEEDTRONIC, e.g. on a steep downhill gradient (overrun mode). ▶ Apply the brakes yourself as required.
Speed limit Winter tyres ... km/h	You are accelerating up to the set speed for permanent SPEEDTRONIC using the accelerator pedal. SPEEDTRONIC controls the speed and the vehicle stops accelerating. ▶ Ease off the accelerator pedal.
Speed limit Winter tyres ... km/h	The speed display flashes. The vehicle has exceeded the speed set for permanent SPEEDTRONIC, e.g. on a steep downhill gradient (overrun mode). ▶ Apply the brakes yourself as required.
Speed limit Winter tyres ... km/h exceeded	The speed display flashes and a warning tone sounds three times. The vehicle is accelerating and exceeds the speed set for permanent SPEEDTRONIC, e.g. on a steep downhill gradient (overrun mode). ▶ Apply the brakes yourself as required.
Tyre press. Adj. press.	The pressure in one or more tyres is too low or there is a significant difference between tyre pressures on individual wheels. ▶ Check the tyre pressure at the next opportunity and correct it if necessary (▷ page 290).
Tyre press. monitor inopera- tive	The tyre pressure monitor has malfunctioned. ▶ Have the tyre pressure monitor and the wheels checked at a qualified specialist workshop.
Tyre press. monitor currently unavail.	The tyre pressure monitor function is temporarily unavailable due to radio interference or undervoltage. ▶ As soon as the causes have been remedied, the tyre pressure monitor activates itself automatically.

Display messages	Possible causes/consequences and ▶ Solutions
Tyre press. monitor inoperative No wheel sensors	The tyre pressure monitor is not receiving signals from one or more wheels because: • a wheel has been replaced with the spare wheel without wheel electronics. • the maximum temperature on one of the wheel electronics units has been exceeded. • a wheel electronics unit is malfunctioning. ▶ Have wheels with suitable wheel electronics units fitted at a qualified specialist workshop.
SPEEDTRONIC/ Cruise cont. Visit workshop	SPEEDTRONIC and/or cruise control have been deactivated due to a fault. ▶ Apply the brakes yourself as required. ▶ Have SPEEDTRONIC and cruise control checked at a qualified specialist workshop.
SRS Restraint system Visit workshop	⚠ **Risk of injury** The restraint systems have malfunctioned. The airbags or belt tensioners could be triggered unintentionally or might not be triggered at all in the event of an accident. ▶ Drive on with care. ▶ Visit a qualified specialist workshop as soon as possible.

Symbol messages on vehicles with steering wheel buttons

Display messages	Possible causes/consequences and ▶ Solutions
 Visit workshop	⚠ **Risk of accident** ASR or the starting-off aid (on vehicles with manual transmission) has been deactivated due to a malfunction. The engine power output may be reduced. ▶ Drive on with care. ▶ Visit a qualified specialist workshop immediately.
 Visit workshop	⚠ **Risk of accident** BAS has been deactivated due to a malfunction. The brake system continues to function normally, but without electronic support. ▶ Drive on with care. ▶ Visit a qualified specialist workshop immediately.

Display messages	Possible causes/consequences and ▶ Solutions
 Unavailable	ASR and the starting-off aid (on vehicles with manual transmission) as well as BAS have been deactivated due to undervoltage. It is possible that the battery is not being charged. The brake system is still available with the normal braking effect. ▶ Drive on with care. ▶ Visit a qualified specialist workshop immediately.
 Steering assistance failure	The power steering assistance is malfunctioning. You will need to use more force to steer. ▶ Carefully continue to a qualified specialist workshop and have the steering checked immediately.
 Battery/Alternator Visit workshop	The battery is not being charged. Possible causes are a defective alternator or a torn poly-V-belt. ▶ Stop the vehicle as soon as possible, paying attention to road and traffic conditions. ▶ Check the poly-V-belt. **If it is torn:** do not drive on. Consult the nearest qualified specialist workshop. **If it is not damaged:** have the vehicle checked at a qualified specialist workshop.
 Brake wear Visit workshop	⚠ **Risk of accident** The brake pads/linings have reached their wear limit. ▶ Have the brake pads/linings replaced as soon as possible at a qualified specialist workshop.
 Brake fluid Visit workshop	⚠ **Risk of accident** There is insufficient brake fluid in the expansion tank. ▶ Stop the vehicle as soon as possible, paying attention to road and traffic conditions. ▶ Check the brake fluid level in the expansion tank (▷ page 202). ▶ If the brake fluid is below the MIN mark: do not drive on! ▶ Do not top up the brake fluid. This does not solve the problem. ▶ Consult a qualified specialist workshop.

Display messages	Possible causes/consequences and ▶ Solutions
 Brake force distribution	⚠ **Risk of accident** EBD has been deactivated due to undervoltage. It is possible that the battery is not being charged. The rear wheels could lock sooner than expected when you apply the brakes. ▶ Stop the vehicle as soon as possible, paying attention to road and traffic conditions. ▶ Do not drive on. ▶ Consult a qualified specialist workshop.
 Brake force distribution Visit workshop	⚠ **Risk of accident** EBD has malfunctioned. The rear wheels could lock sooner than expected when you apply the brakes. ▶ Stop the vehicle as soon as possible, paying attention to road and traffic conditions. ▶ Do not drive on. ▶ Consult a qualified specialist workshop.
 Electrical step	The electrical step has retracted or extended only partially or not at all. The symbol shows the location/side of the affected step. ▶ Make sure there is sufficient free space for the electrical step. ▶ Open or close the sliding door again. ▶ If the electrical step still does not extend or retract fully, push the step in manually (▷ page 279). Make your passengers aware of the missing step before they disembark.
 ENR Warning! Vehicle height	The vehicle level is too low or too high while driving. Handling and driving comfort may be temporarily impaired. ▶ Drive on with care. ▶ ENR adjusts the vehicle level to normal level as soon as possible. ▶ If the display message does not disappear, drive on with care and consult a qualified specialist workshop as soon as possible. An air bellow may be leaking.

Display messages	Possible causes/consequences and ▶ Solutions
 ENR not activated	ENR is deactivated or inoperative due to a malfunction because, for example, the vehicle has been raised by other means. The vehicle level is no longer automatically compensated. Handling and driving comfort may be temporarily impaired. ▶ Drive a short distance at a speed above 2 km/h. ENR is activated automatically. ▶ Drive a short distance at a speed above 10 km/h. ENR is activated automatically. ▶ If the display message does not disappear, drive on with care and consult a qualified specialist workshop as soon as possible.
 Parking brake Release brake	A warning tone also sounds. You are driving with the parking brake applied. ▶ Release the parking brake (▷ page 131).
 Seatbelt sys. Visit workshop	⚠ **Risk of injury** The belt system has malfunctioned. ▶ Visit a qualified specialist workshop as soon as possible.
 Coolant Stop, turn engine off	The coolant temperature is too high. ▶ Stop the vehicle as soon as possible, paying attention to road and traffic conditions. ▶ Consult a qualified specialist workshop.
 Coolant Stop, turn engine off	The coolant temperature is too high. If you stop the vehicle after it has been subjected to extreme loads, the coolant warning lamp may light up when the ignition is switched on or the engine is restarted. Such loads are, for example, when driving in mountainous terrain or driving with a trailer. ▶ Run the engine for approximately 1 minute at idling speed. ▶ Consult a qualified specialist workshop if the display message continues to be shown.
 Check coolant level	The coolant level is too low. Do not run the engine if the coolant level is too low. The engine could overheat and be damaged. ▶ Top up the coolant, observing the warning notes while doing so (▷ page 201). ▶ Have the coolant system checked at a qualified specialist workshop if the coolant needs topping up more often than usual.

Display messages	Possible causes/consequences and ▶ Solutions
 Depress clutch	You are attempting to start the engine and the clutch pedal is not completely depressed. ▶ Before starting the engine, depress the clutch pedal as far as it will go.
 Air cleaner dirty	The service due date for the air filter has been reached. The air filter is dirty. ▶ Have the air filter element replaced as soon as possible at a qualified specialist workshop.
 Bonnet open	You are already driving at walking pace, even though the bonnet is not closed. ▶ Close the bonnet.
 Engine oil Add 1.0 litre	The oil level is too low. ▶ Check the engine oil level the next time you refuel (▷ page 203) and top up the oil.
 Engine oil level Not when eng. running	You want to check the engine oil level, even though the engine is still running. ▶ Switch off the engine. ▶ Check the oil level (▷ page 203).
 Engine oil level Reduce oil level	You have added too much engine oil. There is a risk of damaging the engine or catalytic converter. ▶ Siphon off excess oil until the oil is at the specified level. Observe the legal requirements.
 Engine oil level Stop, turn engine off	There is not enough or no oil in the engine. There is a danger of engine damage. ▶ Stop the vehicle as soon as possible, paying attention to road and traffic conditions. ▶ Check the engine oil level using the oil dipstick (▷ page 204). **If the engine oil level is correct:** have the malfunction rectified immediately at a qualified specialist workshop. **If the engine oil level is too low:** have the vehicle towed to a qualified specialist workshop.
 Oil sensor Visit workshop	The measuring system is malfunctioning. ▶ Have the measuring system checked at a qualified specialist workshop.

Display messages	Possible causes/consequences and ▶ Solutions
 Please enter PIN:	You have not yet entered your PIN in the mobile phone. ▶ Enter the PIN for the SIM card.
 Check tyre(s)	The pressure of one or more tyres has dropped significantly. If the tyre pressure monitor has detected the affected wheel, the wheel position is also displayed. ▶ Stop the vehicle as soon as possible, paying attention to road and traffic conditions. ▶ Check the tyres. ▶ Repair or change the wheel if necessary (▷ page 257). ▶ Check the tyre pressure and correct it if necessary (▷ page 290). The display message disappears automatically after driving for a few minutes with the corrected tyre pressure.
 Caution Tyre defect	One or more tyres is losing air rapidly. If the tyre pressure monitor has detected the affected wheel, the wheel position is also displayed. ▶ Stop the vehicle as soon as road and traffic conditions allow and avoid any sudden steering or braking manoeuvres. ▶ Repair or change the wheel (▷ page 257).
 Remove key	▶ Remove the key from the ignition lock.
 Replace key Visit workshop	The key is no longer working. ▶ Visit a qualified specialist workshop.
 Reserve fuel Drive to a filling stat.	The fuel level has fallen into the reserve range. ▶ Refuel at the nearest filling station (▷ page 175).
 Doors open	You are already driving at walking pace, even though not all the doors are closed. ▶ Close the doors.
 Water in fuel Visit workshop	The water that has collected in the water separator has reached the maximum level. ▶ Drain the water separator (▷ page 255).

Display messages	Possible causes/consequences and ▶ Solutions
 Visit workshop	The diesel particle filter is full. ▶ Have the diesel particle filter checked at a qualified specialist workshop as soon as possible.
 Washer fluid Check level	The washer fluid level has dropped to approximately ⅓ of the reservoir capacity. ▶ Top up the washer fluid (▷ page 202).
 Dipped-beam headlamp left	The left-hand dipped-beam headlamp is faulty. ▶ **Halogen headlamps:** replace the bulb as soon as possible. (▷ page 268) ▶ **Bi-xenon headlamps:** consult a qualified specialist workshop as soon as possible.
 Dipped-beam headlamp right	The right-hand dipped-beam headlamp is faulty. ▶ **Halogen headlamps:** replace the bulb as soon as possible. (▷ page 268) ▶ **Bi-xenon headlamps:** consult a qualified specialist workshop as soon as possible.
 Cornering lt. left	The left-hand cornering light is faulty. ▶ Visit a qualified specialist workshop as soon as possible.
 Cornering lt. right	The right-hand cornering light is faulty. ▶ Visit a qualified specialist workshop as soon as possible.
 Trailer turn signal left	The left-hand turn signal on the trailer is faulty. ▶ Replace the bulb as soon as possible.
 Trailer turn signal right	The right-hand turn signal on the trailer is faulty. ▶ Replace the bulb as soon as possible.
 Trailer brake lamp	The brake lamp on the trailer is faulty. ▶ Replace the bulb as soon as possible.
 Trailer lights left Check bulb	The left-hand trailer tail lamp or the left-hand licence plate lamp is faulty. ▶ Replace the bulb as soon as possible.

Display messages	Possible causes/consequences and ▶ Solutions
 Trailer lights right Check bulb	The right-hand trailer tail lamp or the right-hand licence plate lamp is faulty. ▶ Replace the bulb as soon as possible.
 Lights on automat- ical. Remove key	The automatic headlamp feature is active: the light switch is in the AUTO position and you have forgotten to remove the key. ▶ Remove the key from the ignition lock.
 Turn signal left	The left-hand turn signal is faulty. ▶ Replace the bulb as soon as possible (▷ page 268).
 Turn signal right	The right-hand turn signal is faulty. ▶ Replace the bulb as soon as possible (▷ page 268).
 Brake lamp left	The left-hand brake lamp is faulty. ▶ Replace the bulb as soon as possible (▷ page 268).
 Brake lamp right	The right brake lamp is faulty. ▶ Replace the bulb as soon as possible (▷ page 268).
 Third brake lamp	The third brake lamp is faulty. This display message will only appear if all LEDs have failed. ▶ Visit a qualified specialist workshop as soon as possible.
 Main-beam headlamp left	The left-hand main-beam headlamp is faulty. ▶ Replace the bulb as soon as possible (▷ page 268).
 Main-beam headlamp right	The right-hand main-beam headlamp is faulty. ▶ Replace the bulb as soon as possible (▷ page 268).
 Licence plate lamp	A licence plate lamp is faulty. ▶ Replace the bulb as soon as possible (▷ page 268).
 Switch off lights	You have forgotten to switch off the lights when leaving the vehicle. ▶ Turn the light switch to 0.
 Foglamp front left	The left-hand foglamp lamp is faulty. ▶ Replace the bulb as soon as possible (▷ page 268).

Display messages	Possible causes/consequences and ▶ Solutions
 Foglamp front right	The right-hand foglamp is faulty. ▶ Replace the bulb as soon as possible (▷ page 268).
 Rear foglamp	The rear foglamp is faulty. ▶ Replace the bulb as soon as possible (▷ page 268).
 Parking lamp front left	The front left parking lamp is faulty. ▶ Replace the bulb as soon as possible.
 Parking lamp front right	The front right parking lamp is faulty. ▶ Replace the bulb as soon as possible (▷ page 268).
 Reversing lamp	One of the reversing lamps is faulty. ▶ Replace the bulb as soon as possible (▷ page 268).
 Side marker lamps	A side marker lamp is faulty. ▶ Replace the bulb as soon as possible (▷ page 268).
 Tail lamp left	The left-hand tail lamp is faulty. ▶ Replace the bulb as soon as possible (▷ page 268).
 Tail lamp right	The right-hand tail lamp is faulty. ▶ Replace the bulb as soon as possible (▷ page 268).
 Perim. lamps	A perimeter lamp is faulty. ▶ Replace the bulb as soon as possible (▷ page 268).
 Additional ind. lamps	An additional turn signal is faulty. ▶ Visit a qualified specialist workshop as soon as possible.

Warning and indicator lamps in switches and buttons

⚠ WARNING

If service work is not carried out correctly, the operating safety of your vehicle may be affected. This could cause you to lose control of your vehicle and cause an accident. Moreover, the safety systems may no longer be able to protect you or others as they are designed to do.

Always have service work carried out at a qualified specialist workshop.

Problem	Possible causes/consequences and ▶ Solutions
One or more indicator lamps in the button for the seat heating is flashing.	Insufficient voltage is available because too many consumers are switched on. The seat heating has switched off automatically. ▶ Switch off any consumers which are not needed, e.g. reading lamp, interior lighting. The seat heating will automatically switch back on as soon as there is sufficient voltage.
The indicator lamp in the switch for the windscreen heating and/or the switch for the rear window heating are flashing.	Insufficient voltage is available because too many consumers are switched on. The windscreen heating and/or rear window heating have switched off automatically. ▶ Switch off any consumers which are not needed, e.g. reading lamp, interior lighting. If sufficient voltage is available again within 30 seconds, the windscreen heating and/or rear window heating automatically switch on again. Otherwise, they remain switched off.

Warning tones

⚠ **WARNING**

If service work is not carried out correctly, the operating safety of your vehicle may be affected. This could cause you to lose control of your vehicle and cause an accident. Moreover, the safety systems may no longer be able to protect you or others as they are designed to do.

Always have service work carried out at a qualified specialist workshop.

Problem	Possible causes/consequences and ▶ Solutions
The anti-theft alarm system is suddenly triggered.	You opened the vehicle using the emergency key element without first deactivating the anti-theft alarm system. ▶ Press the or button. or ▶ Insert the key into the ignition lock. The anti-theft alarm system is deactivated.
A warning tone sounds.	A message is shown in the display. ▶ Observe the information on display messages (▷ page 229).
A warning tone sounds.	You are driving with the parking brake applied. ▶ Release the parking brake (▷ page 131).

Problem	Possible causes/consequences and ▶ Solutions
A warning tone sounds.	You have opened the driver's door and forgotten to switch off the lights. ▶ Turn the light switch to 0.
A warning tone sounds.	⚠ **Risk of injury** The driver or co-driver has not fastened his seat belt. ▶ Fasten seat belt (▷ page 34).

Engine

⚠ **WARNING**

If service work is not carried out correctly, the operating safety of your vehicle may be affected. This could cause you to lose control of your vehicle and cause an accident. Moreover, the safety systems may no longer be able to protect you or others as they are designed to do.

Always have service work carried out at a qualified specialist workshop.

Problem	Possible causes/consequences and ▶ Solutions
The engine does not start. The starter motor can be heard.	There is air in the fuel system. ▶ Turn the key back to position **0** in the ignition lock before attempting to start the engine again. ▶ Start the engine again. Please bear in mind that lengthy and frequent starting attempts will drain the battery. If the engine does not start after several attempts: ▶ Consult a qualified specialist workshop.
The engine does not start. The starter motor can be heard. The reserve fuel warning lamp is lit and the fuel gauge is at **0**.	The fuel tank has run dry. ▶ Refuel the vehicle. ▶ **Vehicles with a diesel engine:** bleed the fuel system (▷ page 256).
The engine does not start. The starter motor cannot be heard.	The battery main switch is switched off. ▶ Switch on the power supply (▷ page 98).

Problem	Possible causes/consequences and ▶ Solutions
The engine does not start. The starter motor cannot be heard.	The on-board voltage is too low (the battery is too weak or discharged). ▶ Jump-start the vehicle (▷ page 280). If the engine does not start despite attempts to jump-start it: ▶ Consult a qualified specialist workshop.
The engine does not start. The starter motor cannot be heard.	The battery is discharged or faulty. ▶ Check the battery for damage. ▶ Charge the battery (▷ page 210).
The engine does not start. The starter motor cannot be heard.	The starter is faulty. ▶ Have the starter checked at a qualified specialist workshop.
Vehicles with a petrol engine: The engine is not running smoothly and is misfiring.	There is a malfunction in the engine electronics or a mechanical component of the engine management system. ▶ Only depress the accelerator pedal slightly. ▶ Have the cause rectified immediately at a qualified specialist workshop. Otherwise, unburned fuel may get into the catalytic converter and damage it.

Automatic transmission

⚠ **WARNING**

If service work is not carried out correctly, the operating safety of your vehicle may be affected. This could cause you to lose control of your vehicle and cause an accident. Moreover, the safety systems may no longer be able to protect you or others as they are designed to do.

Always have service work carried out at a qualified specialist workshop.

Problem	Possible causes/consequences and ▶ Solutions
The transmission has a faulty gear shift.	The transmission is losing oil. ▶ Have the transmission checked immediately at a qualified specialist workshop.
The acceleration characteristics have deteriorated noticeably. The transmission does not shift.	The transmission is in emergency mode. It is only possible to shift into second gear or reverse gear **R**. ▶ Stop the vehicle. ▶ Depress the brake pedal. ▶ Move the selector lever to position **P**. ▶ Switch off the engine. ▶ Wait at least 10 seconds before starting the engine again. ▶ Depress the brake pedal. ▶ Move the selector lever to position **D** or **R**. In position **D**, the transmission shifts into second gear; in position **R**, the transmission shifts into reverse gear. ▶ Have the transmission checked immediately at a qualified specialist workshop.

Driving systems

⚠ **WARNING**

If service work is not carried out correctly, the operating safety of your vehicle may be affected. This could cause you to lose control of your vehicle and cause an accident. Moreover, the safety systems may no longer be able to protect you or others as they are designed to do.

Always have service work carried out at a qualified specialist workshop.

Problem	Possible causes/consequences and ▶ Solutions
The electronic level control (ENR) is malfunctioning. You cannot raise or lower the level of the vehicle when stationary. The indicator lamp in the button is off.	The compressor threatens to overheat. After repeated raising and lowering of the vehicle, play protection deactivates ENR. ▶ After approximately one minute, attempt to set the vehicle level again manually.
	ENR is deactivated due to undervoltage. It is possible that the battery is not being charged. Handling and ride comfort may suffer. ▶ Start the engine. ▶ Consult a qualified specialist workshop as soon as possible.

Problem	Possible causes/consequences and ▶ Solutions
Only the red segments in the PARKTRONIC warning displays are lit. A warning tone also sounds for approximately two seconds. PARKTRONIC is deactivated after approximately 20 seconds. The indicator lamp on the OFF switch lights up and the red segments in the PARKTRONIC warning display go out.	PARKTRONIC has malfunctioned and has switched itself off. When you press the OFF switch, the red segments in the warning displays of PARKTRONIC light up again and the warning tone sounds for approximately two seconds. ▶ Have PARKTRONIC checked as soon as possible at a qualified specialist workshop.
The PARKTRONIC warning displays implausible distances. For example, all the segments may be lit even though there is no obstacle present.	The PARKTRONIC sensors are dirty or iced up. ▶ Clean the PARKTRONIC sensors (▷ page 195). ▶ Turn the key to position **2** in the ignition lock.
The PARKTRONIC warning displays implausible distances. For example, all the segments may be lit even though there is no obstacle present.	An external radio or ultrasonic source may be causing interference. ▶ Check PARKTRONIC functions in a different location.
The PARKTRONIC warning displays implausible distances. For example, all the segments may be lit even though there is no obstacle present.	The licence plate or other parts attached near the sensors may not be secured correctly. ▶ Check the licence plate and attachment parts near the sensors for correct seating.

Problem	Possible causes/consequences and ▶ Solutions
The speed cannot be set when cruise control or SPEEDTRONIC is activated[16].	The display is showing a message of high priority and cannot therefore show a change in speed. ▶ Proceed as instructed by the message in the display. ▶ Deactivate cruise control or SPEEDTRONIC.
White stripes appear on the reversing camera's monitor display or the picture flickers.	The reversing camera is exposed to very bright white light or fluorescent light. ▶ Check whether the reversing camera works at another location.
The reversing camera is functioning incorrectly or not at all.	• The surrounding area is very dark. • The outside temperature has changed rapidly or is very high. • The camera lens is dirty or obstructed. ▶ Check the reversing camera and clean the camera lens if necessary (▷ page 195).

Auxiliary heating

⚠ **WARNING**

If service work is not carried out correctly, the operating safety of your vehicle may be affected. This could cause you to lose control of your vehicle and cause an accident. Moreover, the safety systems may no longer be able to protect you or others as they are designed to do.

Always have service work carried out at a qualified specialist workshop.

Problem	Possible causes/consequences and ▶ Solutions
The Err message appears in the timer display panel.	Lack of fuel. The fuel tank is less than one quarter full. The auxiliary heating switches off automatically. ▶ Refuel at the nearest filling station. ▶ Then, start the auxiliary heating several times until the fuel lines are full.
The Err message appears in the timer display panel.	A malfunction has occurred. ▶ Have the auxiliary heating checked at a qualified specialist workshop.

[16] Only on vehicles with steering wheel buttons.

Problem	Possible causes/consequences and ▶ Solutions
The ini message appears in the timer display panel.	The power supply has been interrupted. All stored settings are deleted. Automatic hardware recognition is currently active. ▶ Once automatic hardware recognition is complete, set the weekday, time and operating duration (▷ page 121). ▶ Set the switch-on time (▷ page 116).
The indicator lamp on the remote control flashes red rapidly.	The remote control battery is discharged. Communication is not possible. ▶ Replace the remote control battery (▷ page 277).
The indicator lamp on the remote control flashes red and green in rapid succession.	There is no connection between the remote control and the receiver in the vehicle. ▶ Change your position in relation to the vehicle, e.g. hold the remote control higher or to the side. ▶ Move closer. If you cannot establish a connection and the auxiliary heating is switched on, it can then only be deactivated using the switch (▷ page 116).
The indicator lamp on the remote control flashes red and green in rapid succession.	Several remote controls are being used at the same time. ▶ Switch on the remote control again after a short while (▷ page 118).
The indicator lamp on the remote control flashes red and green in rapid succession.	The remote control is not synchronised. ▶ Synchronise the remote control (▷ page 119)
The indicator lamp on the remote control slowly flashes red and green alternately.	The remote control is being synchronised. ▶ Wait until the remote control synchronisation process is complete (▷ page 119).
The remote control for the auxiliary heating cannot be switched on.	The remote control battery is discharged. ▶ Replace the remote control battery (▷ page 277).

Problem	Possible causes/consequences and ▶ Solutions
The auxiliary heating switches off automatically and/or cannot be switched on.	Lack of fuel The fuel tank is less than one quarter full. The auxiliary heating switches off automatically. ▶ Refuel at the nearest filling station. ▶ Then, start the auxiliary heating several times until the fuel lines are full.
The auxiliary heating switches off automatically and/or cannot be switched on.	The low-voltage protection system integrated in the control unit switches off the auxiliary heating because the on-board voltage is less than 10 V. ▶ Have the alternator and battery checked.
The auxiliary heating switches off automatically and/or cannot be switched on.	The fuse is blown. ▶ Replace the fuse; see the "Fuse allocation" supplement. ▶ Have the cause of the blown fuse determined at a qualified specialist workshop.
The auxiliary heating switches off automatically and/or cannot be switched on.	A malfunction has occurred. ▶ Switch the ignition on and off twice. If the auxiliary heating still cannot be switched on, the heating device is faulty. ▶ Have the auxiliary heating checked at a qualified specialist workshop.
The hot-water auxiliary heater has overheated.	The coolant level is too low. ▶ Check the coolant level and top up if necessary (▷ page 201).
The hot-water auxiliary heater has overheated.	The air ducts are blocked. ▶ Make sure that the flow of hot air is not blocked. ▶ Have the auxiliary heating checked at a qualified specialist workshop.

Central locking system

⚠ WARNING

If service work is not carried out correctly, the operating safety of your vehicle may be affected. This could cause you to lose control of your vehicle and cause an accident. Moreover, the safety systems may no longer be able to protect you or others as they are designed to do.

Always have service work carried out at a qualified specialist workshop.

Problem	Possible causes/consequences and ▶ Solutions
It is no longer possible to lock the vehicle using the key. The turn signals do not flash when the vehicle is locked.	The doors are not closed properly. ▶ Close the doors properly and lock the vehicle again.
It is no longer possible to lock the vehicle using the key. The turn signals do not flash when the vehicle is locked.	The central locking system has malfunctioned. ▶ Lock the vehicle with the emergency key element (▷ page 277). ▶ Have the central locking system checked as soon as possible at a qualified specialist workshop.
It is no longer possible to lock or unlock the vehicle using the key.	The key battery is weak or discharged. ▶ Point the tip of the key towards the driver's door handle at close range and try again. If this does not work: ▶ Lock or unlock the vehicle with the emergency key element (▷ page 277). ▶ Check whether the battery check lamp on the key lights up briefly each time a button is pressed. If it does not light up, change the battery (▷ page 276).
It is no longer possible to lock or unlock the vehicle using the key.	The key is faulty. ▶ Lock or unlock the vehicle with the emergency key element (▷ page 277). ▶ Have the central locking system checked as soon as possible at a qualified specialist workshop.
The battery check lamp on the key does not light up briefly when a button is pressed.	The key battery is discharged. ▶ Change the battery (▷ page 276).
You have lost a key.	▶ Have the key deactivated at a Mercedes-Benz Service Centre. ▶ Report the loss immediately to the vehicle insurers. ▶ If necessary, have the mechanical locks replaced. Your qualified specialist workshop will be happy to provide you with a replacement.

Problem	Possible causes/consequences and ▶ Solutions
You have lost an emergency key element.	▶ Report the loss immediately to the vehicle insurers. ▶ If necessary, have the mechanical locks replaced. Your qualified specialist workshop will be happy to provide you with a replacement.
The key cannot be turned in the ignition lock.	The key has been in position **0** for a long period of time. ▶ Remove the key and insert it again into the ignition lock. ▶ Check and, if necessary, replace the starter battery. ▶ Turn the key to position **2** in the ignition lock.
The key cannot be turned in the ignition lock.	The on-board voltage is too low. ▶ Switch off all non-essential consumers, such as interior lighting, and try to turn the key again. If this does not work: ▶ Check and, if necessary, replace the starter battery. or ▶ Jump-start the vehicle. or ▶ Consult a qualified specialist workshop.
The key cannot be turned in the ignition lock.	The steering lock has jammed mechanically. ▶ Remove the key and insert it again into the ignition lock. Turn the steering wheel from side to side while doing so.
The electric sliding door moves very slowly.	Emergency operation has been activated. ▶ Have the sliding door checked as soon as possible at a qualified specialist workshop.
The electric sliding door is locked in place.	When the sliding door is fully opened, the "play protection" feature blocks the sliding door. The electric motor is in danger of overheating. ▶ The sliding door is operational again after approximately 30 seconds.
The electric sliding door is locked in place.	The electric motor is malfunctioning. ▶ Disconnect the sliding door with locking feature from the electric motor and open/close by hand (▷ page 278). ▶ Have the sliding door checked as soon as possible at a qualified specialist workshop.

Headlamps

⚠ **WARNING**

If service work is not carried out correctly, the operating safety of your vehicle may be affected. This could cause you to lose control of your vehicle and cause an accident. Moreover, the safety systems may no longer be able to protect you or others as they are designed to do.

Always have service work carried out at a qualified specialist workshop.

Problem	Possible causes/consequences and ▶ Solutions
The headlamps are misted up on the inside.	Air humidity is very high. ▶ Drive with the headlamps switched on. The headlamps are demisted after a short distance.
The headlamps are misted up on the inside.	The headlamp housing is not sealed and moisture has been able to enter. ▶ Have the headlamps checked at a qualified specialist workshop.

Windscreen wipers

⚠ **WARNING**

If service work is not carried out correctly, the operating safety of your vehicle may be affected. This could cause you to lose control of your vehicle and cause an accident. Moreover, the safety systems may no longer be able to protect you or others as they are designed to do.

Always have service work carried out at a qualified specialist workshop.

Problem	Possible causes/consequences and ▶ Solutions
The windscreen wipers are jammed.	The wiper movement is obstructed, e.g. by leaves or snow. The wiper motor has been deactivated. ▶ Stop the vehicle as soon as possible. For safety reasons, remove the key from the ignition lock. ▶ Remove the cause of the obstruction. ▶ Switch on the windscreen wipers again.
The windscreen wipers have stopped working completely.	There is a malfunction in the windscreen wiper drive. ▶ Select another wiper speed on the combination switch. ▶ Have the windscreen wipers checked at a qualified specialist workshop.

Fuel and fuel tank

WARNING

If service work is not carried out correctly, the operating safety of your vehicle may be affected. This could cause you to lose control of your vehicle and cause an accident. Moreover, the safety systems may no longer be able to protect you or others as they are designed to do.

Always have service work carried out at a qualified specialist workshop.

Problem	Possible causes/consequences and ▶ Solutions
On vehicles with a diesel engine: the fuel tank has run completely dry.	There is air in the fuel system. ▶ Bleed the fuel system (▷ page 256).
Fuel is leaking from the vehicle.	**Risk of explosion** The fuel line or the fuel tank is faulty. Leaking fuel creates a risk of fire or explosion. ▶ Switch off the ignition immediately. ▶ Remove the key from the ignition lock. ▶ Do not restart the engine under any circumstances. ▶ Consult a qualified specialist workshop.

Engine

Draining the fuel filter

On vehicles with a diesel engine, it is necessary to drain the fuel filter if the indicator lamp lights up.

If the indicator lamp lights up, drain the fuel filter with water separator immediately. Otherwise, the engine may be damaged.

Environmental note

When handling, storing and disposing of diesel and diesel mixtures, please observe the relevant regulations.

To this end, have the fuel filter with water separator drained at a qualified specialist workshop.

The fuel filter with water separator is in the engine compartment.

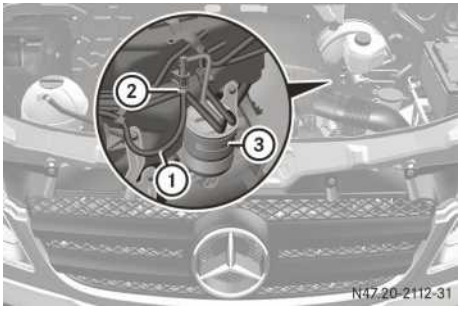

4-cylinder engine

① Drain hose
② Drain plug
③ Fuel filter with water separator

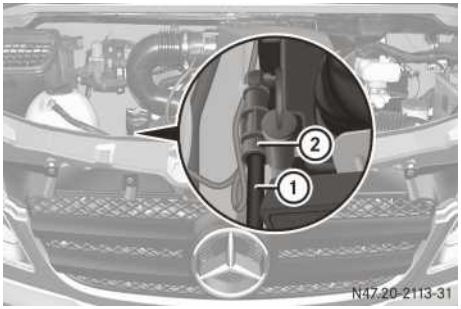

6-cylinder engine

① Drain hose

② Drain plug

- ▶ Apply the parking brake and, if the vehicle is equipped with an automatic transmission, move the selector lever to position **P**.
- ▶ Switch off the engine and open the bonnet (▷ page 200).
- ▶ Place a suitable receptacle under drain hose ①.
- ▶ Turn the key to position **2** in the ignition lock.
- ▶ Open drain plug ② immediately until liquid flows out of drain hose ①. Make sure that the liquid flows into the receptacle under drain hose ①.
- ▶ Close drain plug ② as soon as approximately 0.2 litres of liquid have been collected.

ⓘ The electric fuel pump stops the flow of liquid automatically after 30 seconds.

- ▶ After draining, turn the key back to position **0** in the ignition lock.
- ▶ Dispose of the collected liquid in an environmentally responsible manner, e.g. at a qualified specialist workshop.
- ▶ Drain the fuel filter again if the ⛽ indicator lamp remains lit.

❗ If the ⛽ indicator lamp does not go out after draining for the second time, have the cause checked immediately at a qualified specialist workshop.

Bleeding the fuel system

If the fuel tank on a vehicle with a diesel engine has been run dry, there is a possibility that the engine may not start immediately after refuelling because air may remain in the fuel system.

ⓘ Too many attempts to start the engine could drain the battery.

- ▶ **After refuelling:** turn the key to position **2** in the ignition lock for approximately 10 seconds.
- ▶ Turn the starter motor for up to 60 seconds without interruption until the engine is running smoothly.

If the engine does not start:

- ▶ Wait approximately two minutes.
- ▶ Turn the starter motor for up to 60 seconds again without interruption until the engine is running smoothly.

If this attempt is also unsuccessful, do not attempt to start the engine again. Consult a qualified specialist workshop.

Flat tyre

General notes

The vehicle can be equipped with either Premium tyre sealant or with a spare wheel.

The spare wheel is under the vehicle at the rear (▷ page 217).

If you replace a tyre, Mercedes-Benz also recommends that you replace the tyre valve.

⚠ **WARNING**

Vehicles without a tyre pressure monitor only:

For safety reasons, Mercedes-Benz recommends that you only use tyre valves manufactured by Schrader. These have been tested for use in your vehicle.

Use type TR 414 tyre valves (for vehicles with single tyres) or type TR 418 tyre valves (for vehicles with twin tyres) for a tyre pressure up

to 4.2 bar. For a tyre pressure of more than 4.2 bar you must use a TR 600 tyre valve.

Type TR 414 and TR 418 tyre valves could be damaged if tyre pressure exceeds 4.2 bar.

Using tyre valves from other manufacturers may lead to tyre pressure loss and may thus impair driving safety.

You will find safety-relevant information on tyres and wheels in the "Safety" section .

Vehicle preparation

- ▶ Stop the vehicle as far away as possible from traffic and on a level, firm and non-slip surface.
- ▶ Switch on the hazard warning lamps.
- ▶ Apply the parking brake.
- ▶ Vehicles with manual transmission: engage first gear or reverse gear.
- ▶ Vehicles with automatic transmission: move the selector lever to position **P**.
- ▶ If your vehicle is equipped with an air-sprung rear axle, deactivate ENR (▷ page 161).
- ▶ Any passengers should leave the vehicle, ensuring that they are not endangered as they do so.
- ▶ Place the warning triangle or hazard warning lights at a suitable distance.

  Observe legal requirements.

Using tyre sealant

You can use the Premium tyre sealant to seal small punctures, particularly those in the tyre tread. Tyre sealant can be used at outside temperatures down to –30 °C.

⚠ WARNING

Smoking, fire and naked flames are prohibited when handling tyre sealant. Avoid creating sparks. The tyre sealant could otherwise ignite and cause a fire.

⚠ WARNING

Your safety is at particular risk and the tyre sealant is unable to repair a tyre in the following situations:

- if there are cuts or punctures in the tyre greater than 6 mm
- if the rim is damaged
- if you have driven with very low tyre pressures or with flat tyres

Do not drive any further. Consult a qualified specialist workshop which has the necessary specialist knowledge and tools to carry out the work required.

Mercedes-Benz recommends that you use a Mercedes-Benz Service Centre for this purpose. In particular, work relevant to safety or on safety-related systems must be carried out at a qualified specialist workshop.

- ▶ Prepare the vehicle as described (▷ page 257).
- ▶ Before using Premium tyre sealant, you should stop the vehicle so that the damage on the tyre is at the bottom.
- ▶ It is beneficial to the sealing process if you remove the foreign body that has pierced the tyre, e.g. a screw or a nail.
- ▶ Remove the Premium tyre sealant, the accompanying "max. 80 km/h" sticker and the electric air pump from the stowage compartment in the right-hand doorway (▷ page 216).
- ▶ Affix the sticker within the driver's field of vision.

⚠ WARNING

It is essential to comply with the manufacturer's safety notice on the sticker on the electric air pump and the tyre sealant bottle. You could otherwise fail to recognise dangers and injure yourself and others.

⚠ WARNING

Tyre sealant must not come into contact with your skin, eyes or clothing. Do not inhale TIREFIT fumes.

- If tyre sealant comes into contact with your eyes or skin, immediately rinse thoroughly with clean water.
- Immediately change out of clothing that has been in contact with tyre sealant.
- If an allergic reaction occurs, consult a doctor immediately.

Keep tyre sealant away from children.

- If tyre sealant is swallowed, immediately rinse your mouth out thoroughly and drink plenty of water.
- Do not induce vomiting. Consult a doctor immediately.

ⓘ The tyre sealant is water-soluble. If tyre sealant escapes, you can wash it away with water.

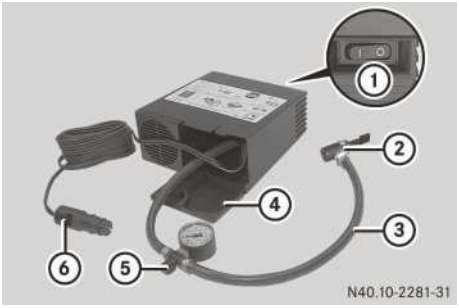

Electric air pump

① Switch
② Angled connecting piece
③ Electric air pump hose
④ Flap
⑤ Pressure gauge with pressure release screw
⑥ Connector with cable

▶ Open flap ④ of the electric air pump.

▶ Pull connector ⑥ and hose ③ with pressure gauge ⑤ from the housing.

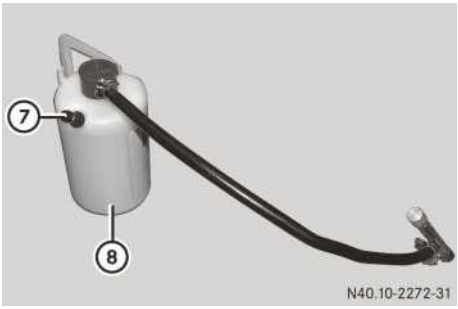

Tyre sealant bottle for single tyres

⑦ Valve
⑧ Tyre sealant bottle with hook, hose and valve core extractor

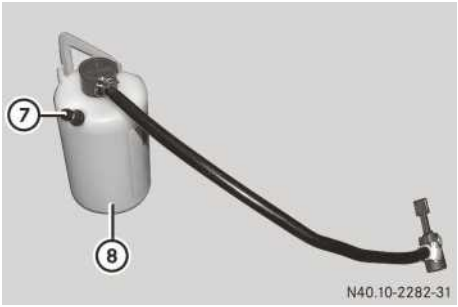

Tyre sealant bottle for twin tyres

⑦ Valve
⑧ Tyre sealant bottle with hook, hose and angled connecting piece

▶ Shake tyre sealant bottle ⑧.

▶ Unscrew and remove the cap from valve ⑦ of tyre sealant bottle ⑧.

▶ Push angled connecting piece ② located on hose ③ of the electric air pump as far as it will go onto valve ⑦ of tyre sealant bottle ⑧ and fix it in place.

The following steps differ depending on the vehicle tyres.

- Single tyre (▷ page 259)
- Twin tyres, inner wheels (▷ page 260)
- Twin tyres, outer wheels (▷ page 261)

Single tyre

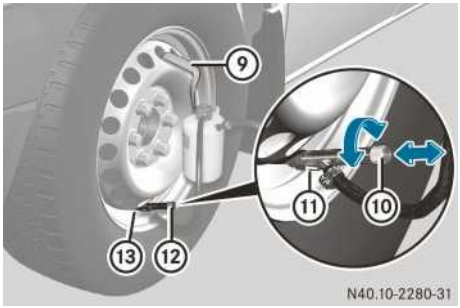

⑨ Hook
⑩ Button
⑪ Lever
⑫ Valve core extractor
⑬ Tyre valve

- ▶ Pull knob ⑩ out of valve core extractor ⑫ as far as it will go.
- ▶ Remove the cap from valve ⑬ on the defective tyre.
- ▶ Hook tyre sealant bottle ⑧ into the upper vent hole in the wheel using hook ⑨.
- ▶ Keep pressing lever ⑪, place valve core extractor ⑫ firmly onto tyre valve ⑬ and then release lever ⑪.
- ▶ Press knob ⑩ into the valve core of valve ⑬, turning it gently as you do so, until the shaft of valve core extractor ⑫ engages.
- ▶ Turn knob ⑩ anti-clockwise until the valve core is unscrewed.
- ▶ Pull knob ⑩ out of valve core extractor ⑫ as far as it will go.
  This pulls the valve core into the valve core extractor and seals it against the valve core extractor stop.
- ▶ Make sure that the pressure release screw on pressure gauge ⑤ is closed.
- ▶ Connect connector ⑥ to the 12 V socket (12 V, 25 A, 300 W) on the centre console (▷ page 166).

! Connect the electric air pump only to the 12 V socket on the centre console. You could otherwise damage the vehicle electrical system.

- ▶ Start the engine.
- ▶ Press switch ① on the electric air pump to **I**.
  The electric air pump is switched on. The tyre sealant is then pumped into the tyre and the tyre pressure is increased. Allow the electric air pump run for at least 10 minutes until tyre sealant bottle ⑧ is completely empty and the tyre pressure is at least 3.0 bar.

! Do not run the electric air pump for longer than 20 minutes without a break; otherwise it may overheat.
The air pump can be used again once it has cooled down.

- ▶ Inflate the tyre using the electric air pump until the recommended tyre pressure (▷ page 290) is reached.
- ▶ Then, press **0** on electric air pump switch ①.
  The electric air pump is switched off.
- ▶ Slide knob ⑩ quickly to the stop in valve core extractor ⑫.
- ▶ Turn knob ⑩ clockwise until the valve core is firmly screwed into tyre valve ⑬.

i Do not pull the valve core extractor from the tyre valve while the valve core is unscrewed from the tyre valve. Tyre sealant could otherwise escape and make you dirty.
The tyre sealant is water-soluble. If tyre sealant escapes, you can wash it away with water.

- ▶ Press lever ⑪ and pull valve core extractor ⑫ from tyre valve ⑬.
- ▶ Screw the valve cap onto tyre valve ⑬.

After filling with tyre sealant, (▷ page 263).

Twin tyres, inner wheels

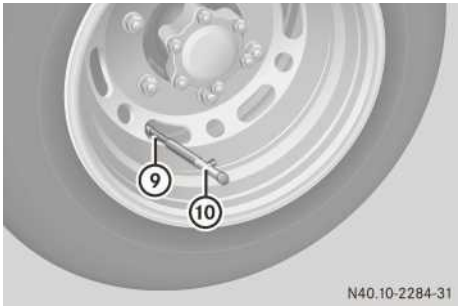

⑨ Valve extension
⑩ Valve core extractor

- ▶ Unscrew the valve cap from valve extension ⑨ on the defective wheel.
- ▶ Screw valve core extractor ⑩ clockwise as far as it will go onto valve extension ⑨.
- ▶ Screw valve core extractor ⑩ approximately a further half turn to release the valve extension.
- ▶ Unscrew the valve extension and the valve core extractor anti-clockwise from the tyre valve.
- ▶ Unscrew the valve extension from the valve core extractor.

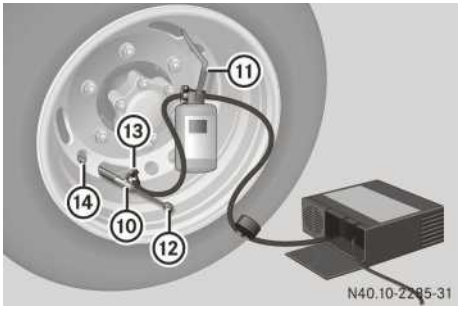

⑩ Valve core extractor
⑪ Hook
⑫ Button
⑬ Angled connecting piece
⑭ Tyre valve

- ▶ Pull knob ⑫ out of valve core extractor ⑩ as far as it will go.
- ▶ Screw valve core extractor ⑩ clockwise onto tyre valve ⑭.
- ▶ Press knob ⑫ into the valve core of valve ⑭, turning it gently as you do so, until the shaft of valve core extractor ⑩ engages.
- ▶ Turn knob ⑫ anti-clockwise until the valve core is unscrewed.
- ▶ Pull knob ⑫ out of valve core extractor ⑩ as far as it will go.
  This pulls the valve core into the valve core extractor and seals it against the valve core extractor stop.
- ▶ Hook tyre sealant bottle ⑧ into the upper vent hole in the wheel using hook ⑪.
- ▶ Push angled connecting piece ⑬ located on the hose of tyre sealant filler bottle ⑧ as far as it will go on to valve core extractor ⑩ and fix it in place.
- ▶ Make sure that the pressure release screw on pressure gauge ⑤ is closed.
- ▶ Connect connector ⑥ to the 12 V socket (12 V, 25 A, 300 W) on the centre console (▷ page 166).

! Connect the electric air pump only to the 12 V socket on the centre console. You could otherwise damage the vehicle electrical system.

- ▶ Start the engine.
- ▶ Press switch ① on the electric air pump to **I**.
  The electric air pump is switched on. The tyre sealant is then pumped into the tyre and the tyre pressure is increased. Allow the electric air pump run for at least 10 minutes until tyre sealant bottle ⑧ is completely empty and the tyre pressure is at least 43.5 psi (3.0 bar).

! Do not run the electric air pump for longer than 20 minutes without a break; otherwise it may overheat.

The air pump can be used again once it has cooled down.

- ▶ Inflate the tyre using the electric air pump until the recommended tyre pressure (▷ page 290) is reached.
- ▶ Then press **0** on electric air pump switch ①.
  The electric air pump is switched off.
- ▶ Slide knob ⑫ quickly to the stop in valve core extractor ⑩.
- ▶ Turn knob ⑫ clockwise until the valve core is firmly screwed into tyre valve ⑭.

ⓘ Do not pull the valve core extractor from the tyre valve while the valve core is unscrewed from the tyre valve. Tyre sealant could otherwise escape and make you dirty.

The tyre sealant is water-soluble. If tyre sealant escapes, you can wash it away with water.

- ▶ Pull knob ⑫ out of valve core extractor ⑩ as far as it will go.
- ▶ Unscrew valve core extractor ⑩ anti-clockwise from tyre valve ⑭.
- ▶ Screw valve extension ⑨ onto tyre valve ⑭ and tighten it.
- ▶ Screw the valve cap onto valve extension ⑨.

After filling with tyre sealant, (▷ page 263).

Twin tyres, outer wheel

The tyre valve is located on the inside of the outer wheel and should be positioned horizontally on the left side of the wheel for the repair process.

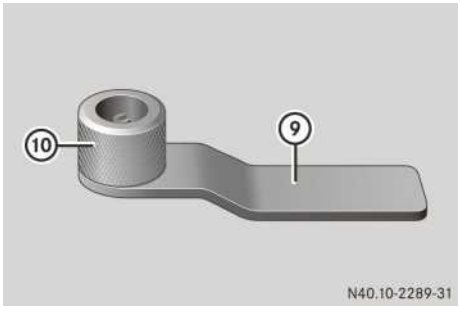

Valve tool with handle and turning piece

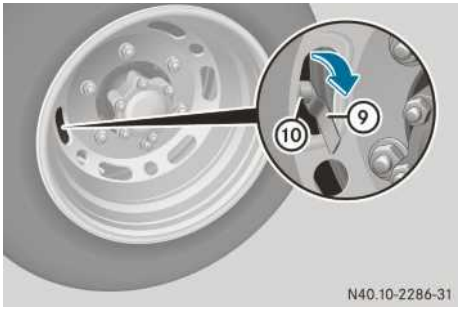

⑨ Handle

⑩ Turning piece

- ▶ Remove the cap from valve ⑪ on the defective tyre.
- ▶ Guide the valve tool through the gap in the wheel and push it onto tyre valve ⑪.
- ▶ Hold handle ⑨ of the valve tool with one hand and unscrew the valve core with the other hand using turning piece ⑩ of the valve tool.
- ▶ Remove the valve tool through the gap carefully, so that the valve core remains engaged in the valve tool.

ⓘ If the valve insert is damaged or lost when it is unscrewed, you can use the valve insert of the tyre sealant bottle after you have used the tyre sealant (▷ page 262).

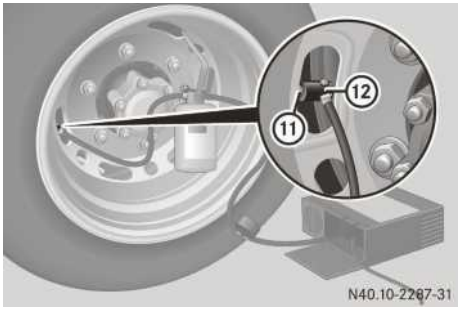

⑪ Tyre valve
⑫ Angled connecting piece

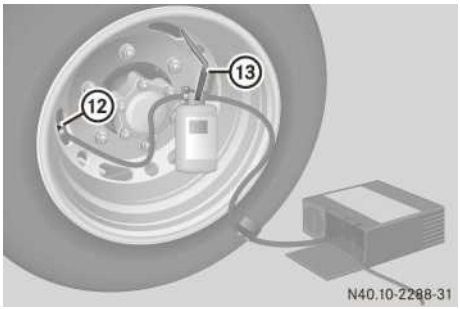

⑫ Angled connecting piece
⑬ Hook

- ▶ Hook tyre sealant bottle ⑧ into the upper vent hole in the wheel using hook ⑬.
- ▶ Push angled connecting piece ⑫ located on the hose of tyre sealant filler bottle ⑧ as far as it will go onto valve ⑪ and fix it in place.
- ▶ Make sure that the pressure release screw on pressure gauge ⑤ is closed.
- ▶ Connect connector ⑥ to the 12 V socket (12 V, 25 A, 300 W) on the centre console (▷ page 166).

! Connect the electric air pump only to the 12 V socket on the centre console. You could otherwise damage the vehicle electrical system.

- ▶ Start the engine.
- ▶ Press switch ① on the electric air pump to **I**.
  The electric air pump is switched on. The tyre sealant is then pumped into the tyre and the tyre pressure is increased. Let the electric air pump run until tyre sealant bottle ⑧ is completely empty.
- ▶ After approximately 15 seconds, press **0** on electric air pump switch ①.
- ▶ Loosen angled connecting piece ⑫ from tyre valve ⑪ and remove it.
- ▶ Screw in the valve core again using the valve tool and remove the valve tool through the opening.

i If the valve insert is damaged or lost when it is unscrewed, you can use the valve insert of the tyre sealant bottle after you have used the tyre sealant.

- ▶ Unscrew the valve insert from the valve of the tyre sealant bottle using the valve extractor.

! Do not run the electric air pump for longer than 20 minutes without a break; otherwise it may overheat.
The air pump can be used again once it has cooled down.

- ▶ Push angled connecting piece ② located on hose ③ of the electric air pump as far as it will go onto tyre valve ⑪ and clamp it in place.
- ▶ Push **I** on electric air pump switch ① and inflate the tyre to the recommended tyre pressure (▷ page 290).
- ▶ Then press **0** on electric air pump switch ①.
  The electric air pump is switched off.

i The tyre sealant is water-soluble. If tyre sealant escapes, you can wash it away with water.

- ▶ Screw the valve cap onto tyre valve ⑪.

After filling with tyre sealant, (▷ page 263).

After filling with tyre sealant

- ▶ Turn the pressure release screw on pressure gauge ⑤ anti-clockwise and bleed the system.
- ▶ Turn the key to position **0** in the ignition lock.
- ▶ Pull the electric air pump connector out of the 12 V socket.
- ▶ Stow the electric air pump, tyre sealant bottle ⑧ with the valve core extractor and/or valve tool, warning triangle and hazard warning lamps in the vehicle.
- ▶ Remove angled connecting piece ② from valve ⑦ of tyre sealant filler bottle ⑧ and screw the valve cap onto the valve.

⚠ WARNING

Do not exceed the maximum speed of 80 km/h.

The "max. 80 km/h" label must be affixed in the driver's field of vision.

The vehicle's handling characteristics may be affected.

- ▶ Pull away immediately.
  This enables the tyre sealant to distribute inside the tyre and create a more effective seal.
- ▶ Stop after driving for about three minutes and check the tyre pressure using the electric air pump, for example.

ⓘ You must connect the angled connecting piece on hose ③ of the electric air pump directly to the tyre valve on the tyre.

- ▶ Correct the tyre pressure accordingly if it does not correspond to the recommended tyre pressure (▷ page 290).
- ▶ **To increase the tyre pressure:** switch on the electric air pump.
- ▶ **To reduce the tyre pressure:** open the pressure release screw on pressure gauge ⑤.
- ▶ Drive to the nearest workshop and have the tyre repaired or replaced.
- ▶ Clean the valve core extractor with clean water.
- ▶ Have tyre sealant bottle ⑧ replaced as soon as possible at a qualified specialist workshop, e.g. a Mercedes-Benz Service Centre.

⚠ WARNING

If the minimum tyre pressure of 3 bar still cannot be achieved, the tyre is too badly damaged.

Do not drive any further. Consult a qualified specialist workshop which has the necessary specialist knowledge and tools to carry out the work required.

Mercedes-Benz recommends that you use a Mercedes-Benz Service Centre for this purpose. In particular, work relevant to safety or on safety-related systems must be carried out at a qualified specialist workshop.

Environmental note

Have the used tyre sealant disposed of at a qualified specialist workshop, e.g. a Mercedes-Benz Service Centre.

! Have the tyre sealant bottle replaced every eight years at a qualified specialist workshop, e.g. a Mercedes-Benz Service Centre.

Changing a wheel in the event of a flat tyre

Important safety notes

⚠ WARNING

If you park a vehicle with an air-sprung rear axle and you leave the ignition switched on, ENR remains active. If you then raise the vehicle, ENR attempts to compensate the vehicle level. This may cause the vehicle to slip off the jack.

To avoid the risk of serious or even fatal injury and to avoid damage to the vehicle, either remove the key from the ignition lock or

switch off ENR when changing a wheel. You can find more information on this in the index under "Electronic level control (ENR)".

⚠ WARNING

To avoid the risk of serious or even fatal injury and to avoid damage to the vehicle, observe the following:

- the vehicle's jack is intended only to raise the vehicle for a short time when changing a wheel.
- position the jack on the appropriate jacking point only. Make sure that the jack is correctly positioned under the jacking point before raising the vehicle.
- the jack must be placed on a firm, flat surface.
- before raising the vehicle, you should also secure it against rolling away, e.g. by placing chocks under the wheels. never release the parking brake while the vehicle is raised.
- make sure that the distance between the underside of the tyres and the ground does not exceed 30 mm. The vehicle could otherwise slip off the jack or tip over.
- never place your hands or feet under the raised vehicle.
- never start the engine, and prevent other jolts or vibrations while the vehicle is raised. The vehicle could otherwise slip off the jack.

Preparing to change a wheel

▶ Prepare the vehicle as described (▷ page 257).

▶ Secure the vehicle against rolling away using chocks or similar items. Use the chock (▷ page 215) to do so.

⚠ WARNING

The vehicle could slip off the jack on uphill and downhill gradients.

To avoid the risk of causing serious or even fatal injury or damage to the vehicle, do not change wheels on uphill and downhill gradients.

On a level road:

▶ Place chocks in front of and behind the wheel which is diagonally opposite the wheel you wish to change.

▶ Take the vehicle tool kit and the jack from the footwell on the co-driver's side (▷ page 214).

▶ Remove the spare wheel from the spare wheel bracket (▷ page 217).

▶ On wheels with wheel bolts, remove the hub cap.

▶ Assemble the wheel wrench extension using the middle rod and the rod with the largest diameter from the three-piece jack pump lever.

▶ Starting with the middle rod, slide the wheel wrench extension as far as it will go onto the wheel wrench.

! Only use the jack pump lever middle rod and the rod with the largest diameter as a wheel wrench extension. Only slide the middle rod as far as it will go onto the wheel wrench. The rods may otherwise bend and be distorted to such an extent that they can no longer be used as a pump lever for the jack.

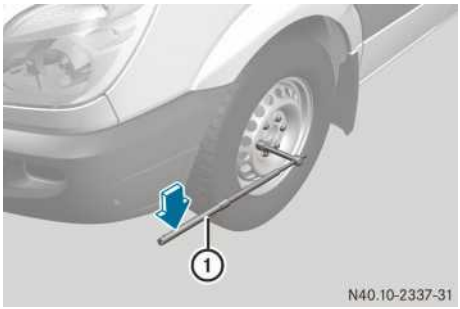

▶ Loosen the wheel nuts or wheel bolts on the wheel to be changed by about one turn using extended wheel wrench ①. Do not unscrew the wheel bolts or wheel nuts completely.

Hydraulic jack

▶ Insert the third rod of the jack pump lever into the wheel wrench extension.

The jack pump lever is assembled.

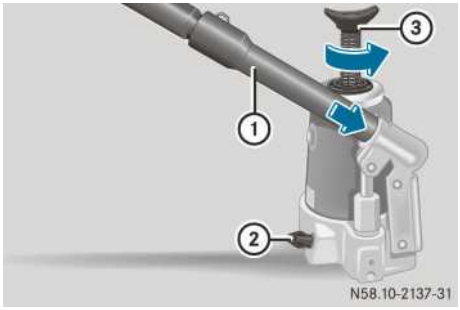

ⓘ To raise an all-wheel-drive vehicle by its front axle, you must turn jack spindle ③ anti-clockwise as far as it will go.

▶ Close pressure release screw ②.

▶ To do this, use the flattened section on pump lever ① to turn pressure release screw ② clockwise to the stop.

ⓘ Never turn pressure release screw ② more than 1 or 2 full turns. Hydraulic fluid could otherwise escape.

▶ Insert pump lever ① into the recess on the jack and secure by turning it clockwise.

▶ Make sure that the jack is positioned directly under the jacking points described below.

▶ Raise the vehicle by pumping the lever until the wheel is raised clear of the ground. Make sure that the distance between the underside of the tyres and the ground does not exceed 30 mm.

Jacking point at the front axle

The vehicle jacking point is located under the longitudinal member in front of the front axle.

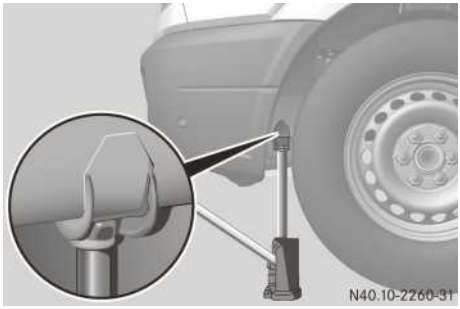

ⓘ If you want to raise an all-wheel-drive vehicle by its front axle, you must turn jack spindle ③ anti-clockwise as far as it will go (▷ page 265).

Jacking point at the rear axle

On panel vans and crewbuses, the vehicle jacking point is located under the longitudinal member in front of the rear axle.



Jacking point (example: panel van/crewbus up to 3.8 t)



Jacking point (example: panel van/crewbus 5 t)

❗ Do not place the jack on the leaf spring or the differential case.

On the chassis version, the jacking point is located next to the front leaf spring support.

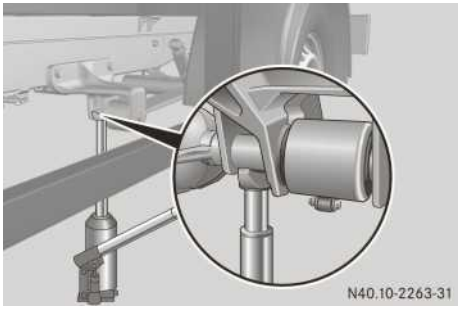

Jacking point (example: platform truck up to 3.5 t)



Jacking point (example: platform truck up to 5 t)

! Only position the jack on the jacking points intended for this purpose. You could otherwise damage the vehicle.

The jacking point is located behind the rear axle on the jack console.



Jacking point (example: vehicle with low-frame chassis)

Removing a wheel

▶ Unscrew the wheel bolts or nuts.

! Do not place the wheel bolts or the wheel nuts in sand or dirt. The threads of the wheel bolts and wheel nuts could otherwise be damaged when being fitted.

▶ On front wheels with wheel nuts, remove the wheel nut cover.

▶ Remove the wheel.

Fitting a new wheel

⚠ WARNING

To reduce the risk of serious or fatal injuries and to avoid damage to the vehicle, observe the following:

- replace the wheel bolts and wheel nuts if they are damaged or have become rusty.
- never oil or grease wheel bolts or wheel nuts.
- if a wheel hub thread is damaged, you must not drive the vehicle.

  Consult a qualified specialist workshop.
- for safety reasons, Mercedes-Benz recommends that you only use wheel bolts and wheel nuts which have been approved for Mercedes-Benz vehicles. Other wheel bolts or wheel nuts could work loose.

▶ Clean the wheel and wheel hub contact surfaces.

▶ Push the wheel onto the wheel hub and press it on.

! On vehicles fitted with a tyre pressure monitor, electronic components are located in the wheel.

Tyre-fitting tools should not be applied in the area of the valve, as this could damage the electronic components.

Only have tyres changed at a qualified specialist workshop.

⚠ WARNING
Do not tighten the wheel bolts and wheel nuts completely while the vehicle is still jacked up. The vehicle could otherwise tip.

Wheels with centring by wheel bolts:

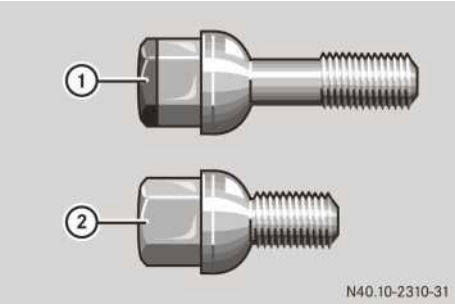

① Wheel bolt for light-alloy wheel
② Wheel bolt for steel wheel

! For a steel wheel, only use the short wheel bolts to fit the steel spare wheel. Using other wheel bolts to fit the steel spare wheel could damage the brake system.

▶ Screw in the wheel bolts and tighten them lightly.

ⓘ On vehicles with light-alloy wheels, you will find short wheel bolts suitable for the steel spare wheel in the vehicle tool kit.

For wheels with wheel nuts:

▶ On the front wheels, push the wheel nut cover onto the wheel bolts.
▶ Screw in three wheel nuts over the fixing discs of the wheel nut cover.
▶ Turn the wheel so that the wheel bolts are in the middle of the holes.
▶ Screw on the rest of the wheel nuts.
▶ Slightly tighten all the wheel nuts.

Lowering the vehicle

▶ Open the pressure release screw on the jack with pump lever slowly by one turn (▷ page 265).
▶ Carefully lower the vehicle.
▶ Put the jack aside.
▶ Pull the rod with the smallest diameter off the pump lever.
The shortened pump lever serves as a wheel wrench extension.
▶ Starting with the middle rod, slide the wheel wrench extension as far as it will go onto the wheel wrench.

! Only use the jack pump lever middle rod and the rod with the largest diameter as a wheel wrench extension. Only slide the middle rod as far as it will go onto the wheel wrench. The rods may otherwise bend and be distorted to such an extent that they can no longer be used as a pump lever for the jack.

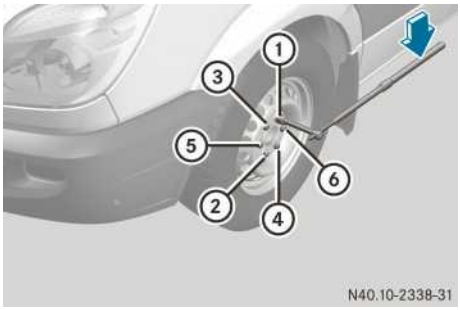

Tightening torque pattern
①–⑥ Wheel bolts or wheel nuts

▶ Tighten all the wheel bolts or wheel nuts evenly in the sequence indicated using the extended wheel wrench.

! The tightening torque is:
- 240 Nm (steel wheel)/180 Nm (light-alloy wheel) for wheel bolts
- 180 Nm for wheel nuts

You can now fit the hub caps on steel wheels with wheel bolts. The fitting procedure depends on whether the hub cap acts as a trim that covers the whole wheel, or just covers the centre.

! With a hub cap that covers the whole wheel, make sure the opening for the tyre valve is positioned over the valve.

▶ Push the edge of the hub cap with both hands against the wheel until it clicks into place.

! With a hub cap for the middle of the wheel, make sure that the clamping lugs of the cover are positioned over the wheel bolts.

▶ Hit the middle of the hub cap to engage it on the wheel.

▶ Push the piston on the hydraulic jack in again and close the pressure release screw.

i On vehicles with all-wheel drive, turn jack spindle ③ clockwise as far as it will go (▷ page 265).

▶ Secure the faulty wheel in the spare wheel bracket (▷ page 217).

▶ Stow the jack and the vehicle tool kit.

▶ Check the tyre pressure and correct if necessary (▷ page 290).

▶ Retighten the wheel bolts or wheel nuts to the specified tightening torque after the vehicle has been driven for 50 km.

Retightening wheel nuts/wheel bolts

⚠ **WARNING**

After changing a wheel, for safety reasons you must:

- have the tightening torque checked for the wheel bolts of 240 Nm (steel wheel)/ 180 Nm (light-alloy wheel) or for wheel nuts of 180 Nm. The wheels could otherwise work loose.
- check the tyre pressure and correct it if necessary.
- have the wheel bolts or wheel nuts tightened after 50 km with a tightening torque for wheel bolts of 240 Nm (steel wheel)/ 180 Nm (light-alloy wheel), or for wheel nuts of 180 Nm.
- if new or repainted wheels are fitted, the wheel bolts or wheel nuts must be retightened again after approx. 1000 to 5000 km to the specified tightening torque.
- have the direction of tyre rotation corrected, if reversed, as soon as possible at a qualified specialist workshop, e.g. a Mercedes-Benz Service Centre. The vehicle handling characteristics could otherwise be affected.

Otherwise, the operating reliability and road safety of the vehicle could be jeopardised. This could cause you to lose control of your vehicle, resulting in an accident and injuring yourself or others.

Electrical system

Notes on replacing bulbs

Bulbs and lamps are an important aspect of vehicle safety. You must therefore make sure that all bulbs are in working order at all times.

⚠ **WARNING**

Bulbs and lamps can be very hot. You should therefore allow them to cool down before you change them. Otherwise, you could be burned if you touch them.

Keep bulbs out of the reach of children. Otherwise, they could damage the bulbs, for example, and injure themselves.

Never use a bulb which has been dropped. Such a bulb may break or even explode and injure you.

Halogen bulbs are pressurised and can explode when you change them, particularly if they are very hot. You should therefore wear eye protection and gloves when you are changing them.

⚠ **DANGER**

Xenon bulbs carry a high voltage. You could get an electric shock and be seriously or even fatally injured if you touch the electric contacts on xenon bulbs. Therefore, never remove the cover from xenon bulbs.

Do not change xenon bulbs yourself, but have them replaced at a qualified specialist workshop which has the necessary specialist knowledge and tools to carry out the work required.

Mercedes-Benz recommends that you use a Mercedes-Benz Service Centre for this purpose. In particular, work relevant to safety or on safety-related systems must be carried out at a qualified specialist workshop.

- To avoid a short-circuit, switch off the lighting system before changing a bulb.
- Only touch new bulbs with a clean lint-free cloth or similar item. Do not work with wet or greasy fingers.
- Only fit 12 V bulbs of the same type and of the correct wattage.
- Have the headlamp setting checked regularly.
- If the new bulb still does not light up, consult a qualified specialist workshop.
- Have the following LEDs and bulbs changed at a qualified specialist workshop:
  - additional turn signals in the exterior mirrors
  - the third brake lamp
  - the bi-xenon bulbs
  - the foglamps (vehicles with foglamps in the bumper)

! Make sure the bulbs are always securely fitted.

Replacing bulbs

Front bulbs

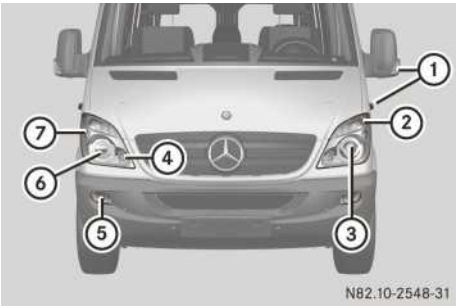

	Lights	Bulb type
①	Additional turn signal lamp in the exterior mirror (not for all-wheel-drive vehicles)	PY 16 W
	Additional turn signal lamp for all-wheel-drive vehicles	P 21 W
②	Turn signal lamps	PY 21 W
③	Halogen headlamps: dipped-beam headlamps	H7 55 W
	Bi-xenon headlamps: dipped-beam/main-beam headlamps	D1S–35 W
④	Halogen headlamps: main-beam headlamps	H7 55 W
	Cornering light function (not for all-wheel-drive vehicles)	H7 55 W
⑤	Foglamps on vehicles registered as passenger cars	H11 55 W
⑥	Foglamps	H7 55 W
⑦	Side lamps/parking lamps	W 5 W

Main-beam headlamps/cornering lamps, dipped-beam headlamps, foglamps

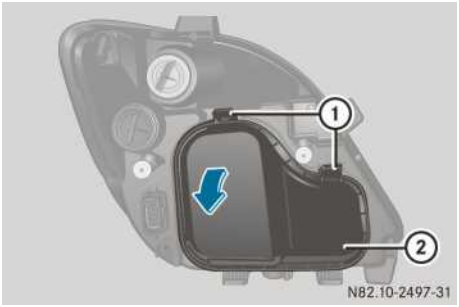

- ▶ Switch off the lights.
- ▶ Open the bonnet (▷ page 200).
- ▶ Press catches ① down.
- ▶ Lift housing cover ② in the direction of the arrow and remove it.

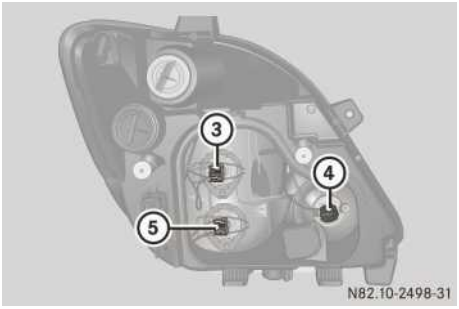

③ Dipped-beam headlamps
④ Halogen main-beam headlamp/xenon cornering lamp headlamp
⑤ Foglamps

- ▶ Disconnect the connector from the bulb.
- ▶ Detach the retainer spring and remove the bulb.
- ▶ Insert the bulb into the socket in such a way that its base fits into the recess.
- ▶ Attach the retainer spring and plug the connector onto the bulb.
- ▶ Insert housing cover ② into the lower mounting points.
- ▶ Fold housing cover ② against the headlamp casing.
- ▶ Push catches ① up until you feel them engage.

Turn signal lamps

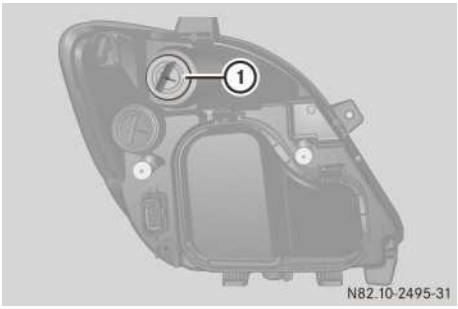

- ▶ Switch off the lights.
- ▶ Open the bonnet (▷ page 200).
- ▶ Turn bulb holder ① clockwise and remove it.
- ▶ Applying light pressure to the bulb, turn it anti-clockwise and remove it from bulb holder ①.
- ▶ Press the new bulb into bulb holder ① and screw it in clockwise.
- ▶ Insert bulb holder ① into the lamp and turn it clockwise.

Side lamps and parking lamps

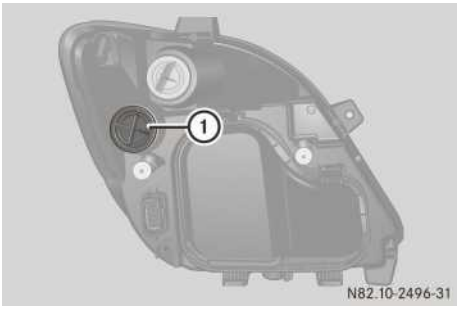

- ▶ Switch off the lights.
- ▶ Open the bonnet (▷ page 200).
- ▶ Turn cap ① anti-clockwise and remove it.

- ▶ Pull out the bulb holder together with the bulb.
- ▶ Remove the bulb from the bulb holder.
- ▶ Press the new bulb into the bulb holder.
- ▶ Insert the bulb holder into the reflector.
- ▶ Replace cap ① and turn it clockwise to the stop.

Additional turn signals for all-wheel-drive vehicles

The lamps are mounted on the side of the vehicle's front wings.

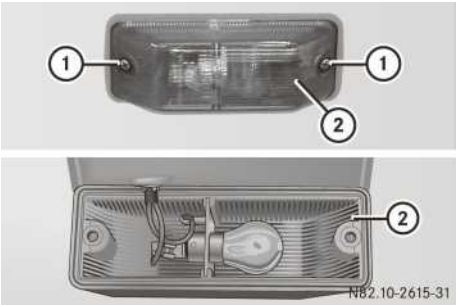

Additional turn signals (example: panel van/crew-bus)

- ▶ Switch off the lights.
- ▶ Undo screws ① and remove lamp lens ②.
- ▶ Applying light pressure to the bulb, turn it anti-clockwise and remove it from the bulb holder.
- ▶ Press the new bulb into the bulb holder and screw it in clockwise.
- ▶ Position lamp lens ② and tighten screws ① again.

Rear bulbs

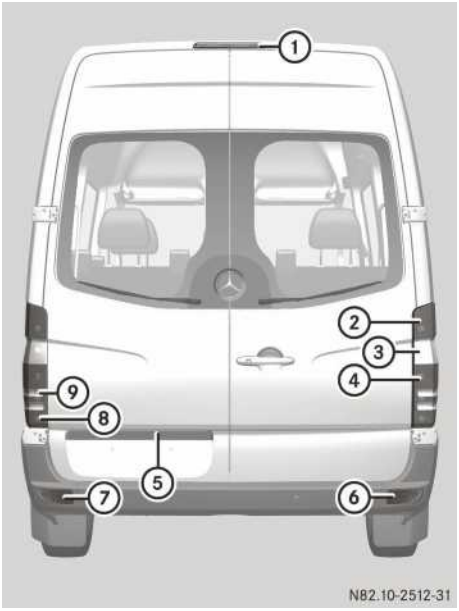

Panel van/crewbus

	Lights	Bulb type
①	Third brake lamp	LED
②	Brake lamps	P 21 W
③	Turn signal lamps	PY 21 W
④	Tail lamps/parking lamps	R 5 W
⑤	Licence plate illumination	W 5 W
⑥	Rear foglamp, all-wheel-drive vehicles (right-hand-drive vehicles)	P 21 W
⑦	Rear foglamp, all-wheel-drive vehicles (left-hand-drive vehicles)	P 21 W

	Lights	Bulb type
⑧	Rear foglamp (driver's side)	P 21 W
⑨	Reversing lamp	P 21 W

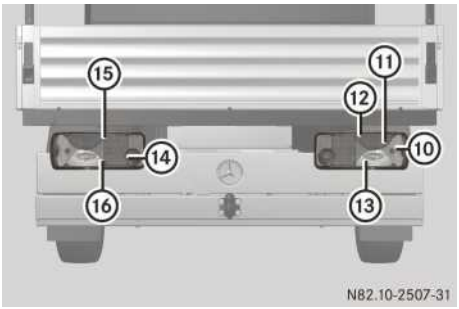

Chassis (example: platform truck)

	Lights	Bulb type
⑩	Perimeter lamp	R 5 W
⑪	Turn signal lamps	PY 21 W
⑫	Brake lamps	P 21 W
⑬	Reversing lamp	P 21 W
⑭	Rear foglamp (driver's side)	P 21 W
⑮	Tail lamp	R 5 W
⑯	Licence plate illumination	R 5 W

Changing the rear bulbs (panel van/crew-bus)

Rear light cluster

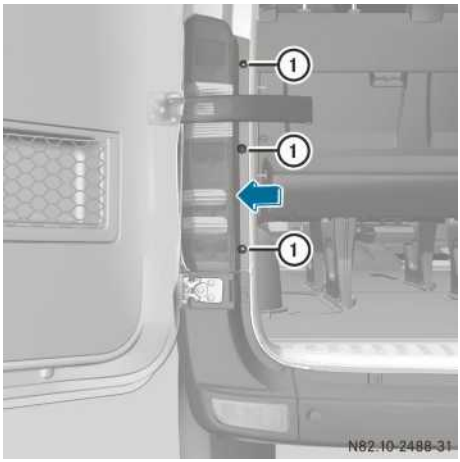

- ▶ Switch off the lights.
- ▶ Undo screws ① and remove the rear lamp lens in the direction of the arrow.
- ▶ Pull the connector off the bulb holder.

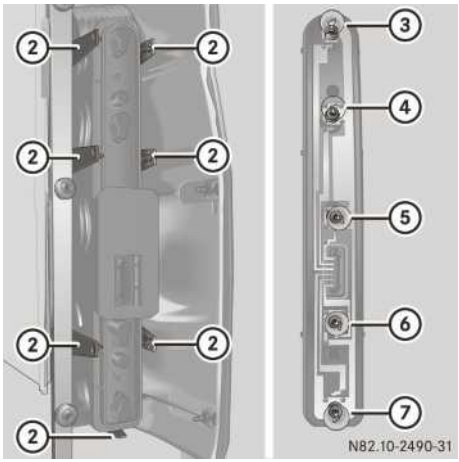

② Retaining lugs
③ Brake lamps
④ Parking lamp/tail lamp
⑤ Reversing lamp
⑥ Turn signal lamps
⑦ Rear foglamp

- ▶ Release retaining lugs ② and take the bulb holder out of the rear lamp cluster.
- ▶ Applying light pressure to the bulb, turn it anti-clockwise and remove it from the bulb holder.
- ▶ Press the new bulb into the bulb holder and screw it in clockwise.
- ▶ Press the connector into the bulb holder.
- ▶ Insert the lamp lens.

  To do this, clip the bulb holder into the three holes provided at the side and tighten screws ①.

Licence plate illumination

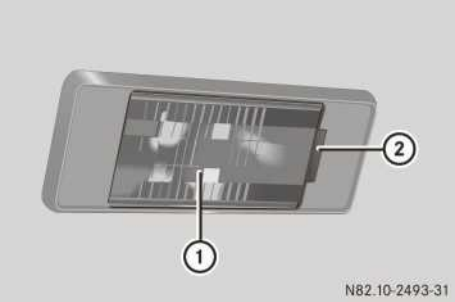

- ▶ Switch off the lights.
- ▶ Insert a screwdriver or similar implement into recess ② and carefully prise off lamp lens ①.
- ▶ Remove the bulb from the bulb holder.
- ▶ Insert a new bulb.
- ▶ Align lamp lens ① and clip it in so that it engages.

Rear foglamp for all-wheel-drive vehicles



① Rear foglamp

- ▶ Switch off the lights.
- ▶ Carefully release the rear foglamp in the direction of the arrow using a screwdriver, for example.
- ▶ Turn the bulb holder clockwise and remove it.
- ▶ Applying light pressure to the bulb, turn it anti-clockwise and remove it from the bulb holder.
- ▶ Press the new bulb into the bulb holder and screw it in clockwise.
- ▶ Insert the bulb holder and turn it clockwise to the stop.
- ▶ Clip the rear foglamp back in.

Changing the rear bulbs (chassis)

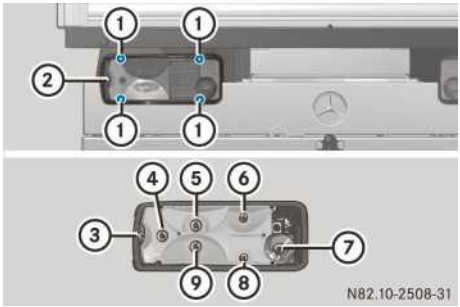

① Screws
② Lamp lens
③ Perimeter lamp
④ Turn signal lamps
⑤ Brake lamps

⑥ Tail lamp
⑦ Rear foglamp
⑧ Licence plate illumination
⑨ Reversing lamp

- ▶ Switch off the lights.
- ▶ Undo screws ① and remove lamp lens ②.
- ▶ Applying light pressure to the bulb, turn it anti-clockwise and remove it from the bulb holder.
- ▶ Press the new bulb into the bulb holder and screw it in clockwise.
- ▶ Position lamp lens ② and tighten screws ① again.

Changing additional bulbs

Additional turn signal lamp on the roof P 21 W

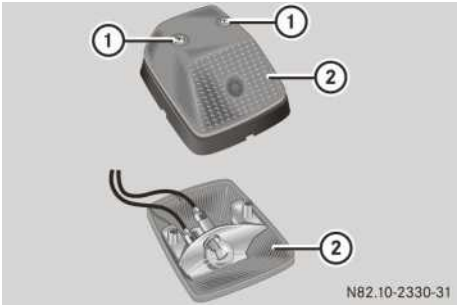

- ▶ Switch off the lights.
- ▶ Undo screws ① and remove lamp lens ②.
- ▶ Applying light pressure to the bulb, turn it anti-clockwise and remove it from the bulb holder.
- ▶ Press the new bulb into the bulb holder and screw it in clockwise.
- ▶ Position lamp lens ② and tighten screws ① again.

Perimeter lamp W 5 W

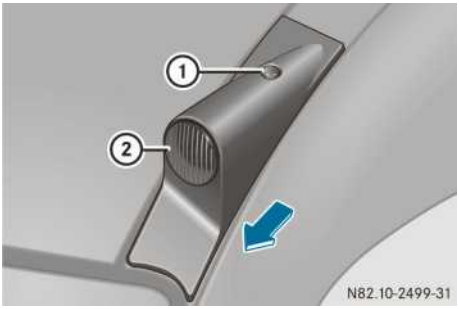

- ▶ Switch off the lights.
- ▶ Undo screw ① and remove lamp housing ② in the direction of the arrow.
- ▶ Turn the bulb holder and remove it.
- ▶ Remove the bulb from the bulb holder.
- ▶ Press the new bulb into the bulb holder.
- ▶ Screw the bulb holder into the lamp lens.
- ▶ Replace lamp housing ② in the opposite direction to the arrow and tighten screw ① again.

Side marker lamp W 3 W

The lights are on the side of the vehicle.

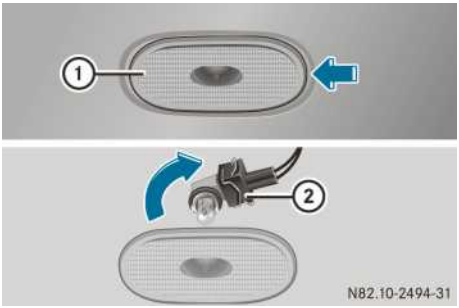

- ▶ Switch off the lights.
- ▶ Insert a screwdriver or similar implement at the side and carefully prise off lamp lens ① in the direction of the arrow.
- ▶ Turn bulb holder ② in the direction of the arrow and remove it.
- ▶ Remove the bulb from bulb holder ②.
- ▶ Press the new bulb into bulb holder ②.

- ▶ Screw bulb holder ② into the lamp lens.
- ▶ On panel vans and crewbuses, insert the lamp lens with bulb holder ②.

Entry lamp W 5 W

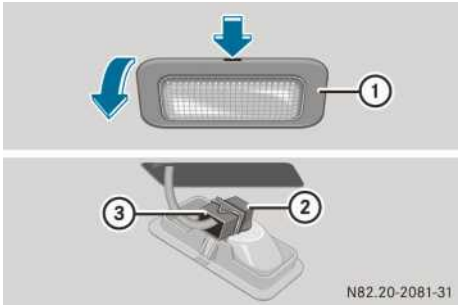

- ▶ Switch off the lights.
- ▶ Press in the latching spring of lamp housing ① with a suitable implement, e.g. a screwdriver.
- ▶ Prise off lamp housing ①.
- ▶ Disconnect cable connector ③.
- ▶ Unscrew bulb holder ②.
- ▶ Remove the bulb from bulb holder ②.
- ▶ Press the new bulb into bulb holder ②.
- ▶ Screw bulb holder ② into lamp unit ①.
- ▶ Connect cable connector ③.
  The connector locking spring must engage.
- ▶ Align and engage lamp housing ①.

Front interior light K 18 W

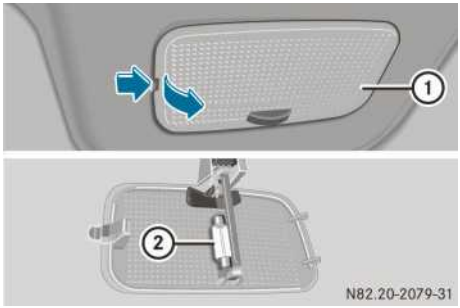

- ▶ Switch off the lights.
- ▶ Press in the latching spring of lamp housing ① with a suitable implement, e.g. a screwdriver.
- ▶ Prise off lamp housing ①.
- ▶ Remove bulb ② from the bulb holder.
- ▶ Insert new bulb ②.
- ▶ Align and engage lamp housing ① on the right-hand side.

! Have the interior lights in the overhead control panel replaced at a qualified specialist workshop. You could otherwise damage the overhead control panel.

Rear interior lights K 15 W



Interior light with switch

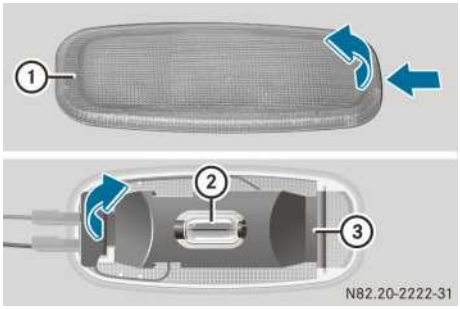

Interior light without switch

- ▶ Switch off the lights.
- ▶ Press in the latching spring of lamp housing ① with a suitable implement, e.g. a screwdriver.
- ▶ Prise off lamp housing ①.

- ▶ For interior lights without a switch, fold back protective cover ③.
- ▶ Remove bulb ② from the bulb holder.
- ▶ Insert new bulb ②.
- ▶ For interior lights without a switch, fold back protective cover ③.
- ▶ Align lamp housing ① on the left-hand side and engage.

Fuses

Blown fuses must be replaced with fuses of the same rating and which have the amperage specified in the fuse allocation chart. Fuses of the same rating can be recognised by the colour and amperage. A Mercedes-Benz Service Centre will be happy to advise you.

An overview of the fuse allocation chart and further notes on fuses can be found in the "Fuse allocation chart" Supplement.

Batteries for the remote control

Notes on changing the batteries

⚠ WARNING

Batteries contain poisonous substances.

Swallowing/ingesting batteries can result in serious personal injury or death.

Always keep batteries away from children. If a battery is swallowed, seek immediate medical attention.

Environmental note

Batteries contain pollutants. It is illegal to dispose of them with the household rubbish. They must be collected separately and disposed of in an environmentally responsible recycling system.

Dispose of batteries in an environmentally responsible manner. Take discharged batteries to a qualified specialist workshop or to a collection point for used batteries.

Keys

You need a CR 2025 3 V cell battery.

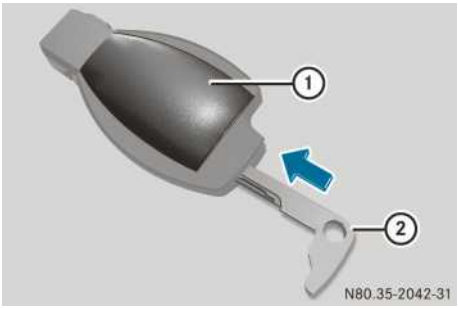

- ▶ Pull out emergency key element ② from the key (▷ page 277).
- ▶ Push emergency key element ② into the opening in the key in the direction of the arrow until battery compartment cover ① opens.
- ▶ Remove battery compartment cover ①.

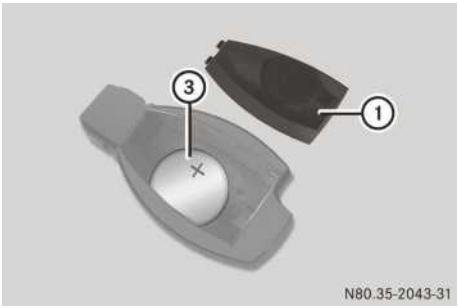

- ▶ Tap the key against the palm of your hand so that old battery ③ falls out of the battery compartment.
- ▶ Insert new clean and lint-free battery ③ into the battery compartment with the positive pole face up. Use a lint-free cloth to do so.

- ▶ Fit battery compartment cover ① to the key casing with the front lugs first and push closed.
- ▶ Slide emergency key element ② back into the key casing.
- ▶ Check the function of all key buttons on the vehicle.

Auxiliary heating

If the indicator lamp on the remote control flashes red rapidly, the remote control battery is discharged. You should replace the remote control battery.

You need a battery of the type CR2430.



① Mark
② Battery cover
③ Battery
④ Recesses in the housing

- ▶ Remove battery cover ② using a suitable implement, e.g. a coin, by turning it anti-clockwise.
- ▶ Check the seal on battery cover ② for damage and if necessary replace.
- ▶ Remove old batteries ③.

ⓘ When inserting the battery, make sure that it is clean and lint-free.

- ▶ Insert new battery ③ so that the positive terminal and battery type marking is face up. Use a lint-free cloth to do so.
- ▶ Position battery cover ② so that mark ① on the raised area, points between two recesses ④.
- ▶ Remove battery cover ② using a suitable implement, e.g. a coin, by turning it anti-clockwise to the stop.
- ▶ Check all the functions of the remote control (▷ page 118).

Opening/closing in an emergency

Locking/unlocking the vehicle using the emergency key element

Removing the emergency key element

If you can no longer lock or unlock the doors using the key, use the emergency key element.

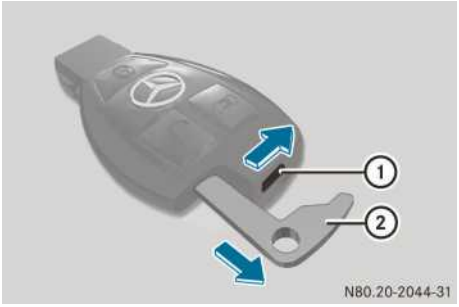

- ▶ Slide release catch ① in the direction of the arrow and, at the same time, remove emergency key element ② from the key completely.

Vehicles with convenience opening/closing feature

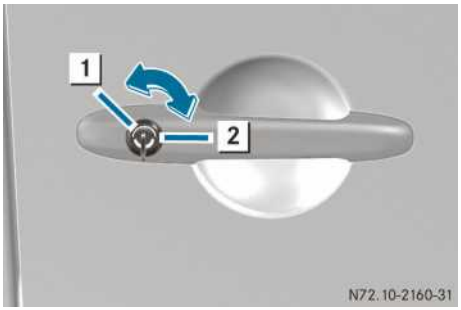

Door lock for emergency unlocking on the co-driver's door

1 To unlock

2 To lock

▶ Insert the emergency key element fully into the co-driver's door lock and turn it anti-clockwise.
The co-driver's door is unlocked.

Vehicles without convenience opening/closing feature

The door lock for unlocking in an emergency is on the driver's door.

▶ Insert the emergency key element fully into the driver's door lock and turn it clockwise.
The driver's door is unlocked.

ⓘ The anti-theft alarm system (ATA) is triggered when you open the vehicle using the emergency key element.

The alarm can be disabled in the following ways:

▶ Press the [🔓] or [🔒] button on the key.

or

▶ Insert the key into the ignition lock.

Vehicle with partition

If the vehicle is equipped with a partition, it is only possible to gain access to the load compartment by using the emergency unlocking feature for the rear doors.

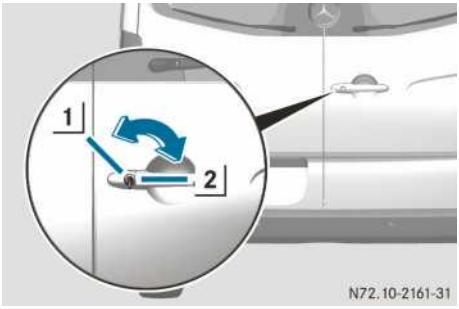

1 To unlock

2 To lock

▶ Insert the emergency key element fully into the rear door lock and turn it anti-clockwise.
The rear door releases.

Unlocking the electric sliding door

If there has been a malfunction or if the battery has been disconnected, you can use the release catch to disconnect the sliding door from the electric drive. Then, you can open or close the door manually.

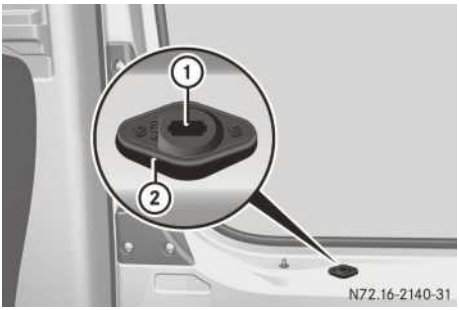

▶ **To disconnect the sliding door from the electric drive:** insert the key into opening ① of release catch ② in the "AUTO" position.

▶ Turn the key 180° clockwise.
You can see the "MAN" position.

▶ Open or close the sliding door by the handle on the outside/inside.

▶ **To connect the sliding door to the electric drive:** insert the key into opening ① of release catch ② in the "MAN" position.

▶ Turn the key 180° anti-clockwise.
You can see the "AUTO" position.

ⓘ If you turn the key from "MAN" position back to "AUTO", you must reset the sliding door.

To do this, fully close the sliding door once with the button on the centre console or in the doorway pressed down. Then, briefly press one of the buttons to completely open and close the door once.

If this does not rectify the malfunction, consult a qualified specialist workshop.

Electrical step

⚠ **WARNING**

The step may cause injury to other road users if left extended when driving.

If the electrical step does not retract automatically, you will have to push it in and lock it into place manually before continuing your journey.

❗ Driving with the step extended may result in it being damaged.

If the electrical step does not retract automatically, you will have to push it in and lock it into place manually before continuing your journey.

If a malfunction occurs, you can push the electrical step in and secure it manually for the onward journey.

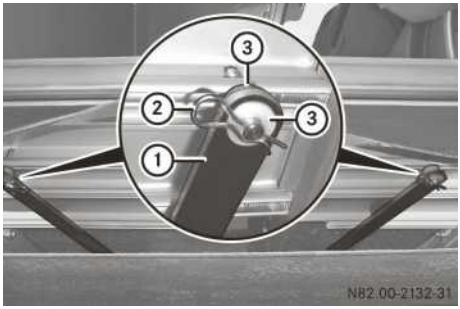

▶ Pull R-clips ② on both rods ① on the underside of the step out of their respective pins.

▶ Remove washers ③ and detach both rods ①.

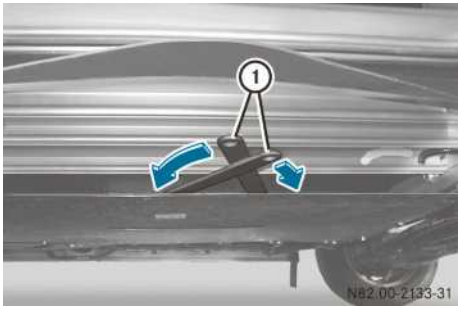

▶ Fold rods ① into the housing in the step.

▶ Push the step into its housing.

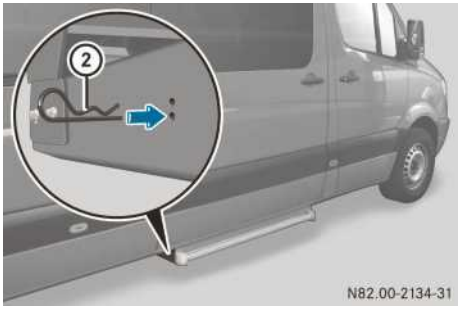

▶ Insert R-clips ② into the step as far as they will go through the holes on both sides of the housing.
The step is secured in its housing.

Automatic transmission

In the event of a malfunction, it is possible to manually release the selector lever from the lock in parking position **P**, e.g. to have the vehicle towed away.



▶ Remove cover ①.



▶ Slide implement ② as far as it will go into the opening.

▶ Push the implement in and simultaneously move the selector lever out of position **P**.

▶ Remove implement ②.

▶ Refit cover ①.

Jump-starting, tow-starting and towing away

Jump-starting

Important safety notes

⚠ WARNING

Explosive oxyhydrogen is produced when batteries are being charged. Therefore provide sufficient ventilation for any work on batteries.

Avoid naked flames and do not smoke in the vicinity of batteries.

Avoid the creation of sparks (e. g. when disconnecting the batteries). Sparks could ignite the oxyhydrogen, causing the batteries to explode. This could result in serious injury to yourself or others.

⚠ WARNING

When jump-starting, there is a risk of acid burns due to gases escaping from the batteries. Do not lean over the batteries when jump-starting.

! Avoid repeated and lengthy starting attempts.

Do not use a rapid-charging device to start the engine.

Vehicle preparation

When jump-starting, observe the following points:

- jump-starting must only be performed when the engine and catalytic converter are cold.
- do not start the engine if the battery is frozen. Let the battery thaw first.
- only use batteries with the same nominal voltage and a similar capacity.
- only use jump leads protected against polarity reversal, with adequate cross-section and with insulated battery terminal clamps.

- ▶ Make sure that the two vehicles do not touch.
- ▶ Apply the parking brake.

or

- ▶ If the vehicle is equipped with an automatic transmission, move the selector lever to position **P**.
- ▶ Switch off all electrical consumers.
- ▶ Switch on the battery main switch (▷ page 98).
- ▶ Remove the key from the ignition lock.
- ▶ Open the bonnet (▷ page 200).

Connecting the jump leads to vehicles without starter aid

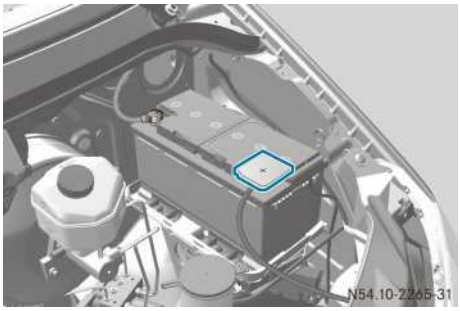

Vehicles without a starter aid are identified by the white positive terminal cover. If your vehicle is not equipped with a starter aid, only jump-start using the jump-starting connection point in the engine compartment.

The additional battery in the engine compartment is not suitable for jump-starting operations.

Depending on the vehicle's equipment, the jump-starting connection point is located in one of the following positions in the engine compartment:

- on the left of the air filter (when viewed in the direction of travel)
- on the right of the air filter (when viewed in the direction of travel)
- on the bulkhead

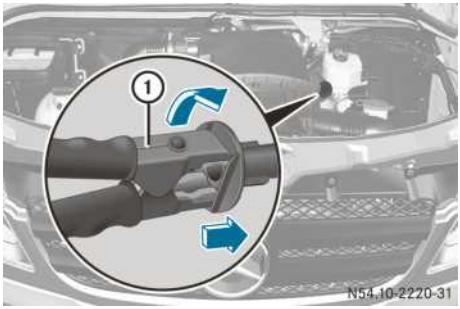

Jump-starting connection point on the left next to the air filter (example: 6 cylinder engine)

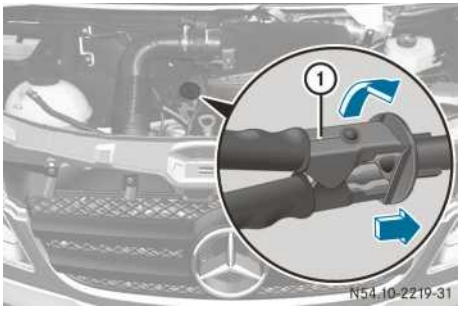

Jump-starting connection point on the right next to the air filter (example: 4 cylinder diesel engine)

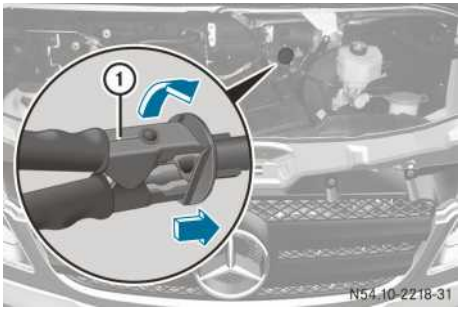

Jump-starting connection point on the bulkhead (example: 4 cylinder petrol engine)

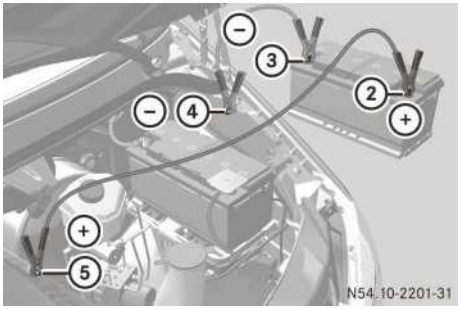

Terminal connection diagram (example)

- ▶ Remove positive terminal ② cover of the donor battery.
- ▶ Connect the positive terminal clamp of the jump lead to positive terminal ② of the donor vehicle's battery.
- ▶ Then, with other positive terminal clamp ① of the jump lead, slide the red protective cap of the jump-starting connection point back with a clockwise turn and connect positive terminal ① to positive terminal ⑤ of the jump-starting connection point.
- ▶ Run the donor vehicle's engine at idling speed.
- ▶ Connect the negative terminal clamp of the jump lead to negative terminal ③ of the donor vehicle's battery, and then to earth contact ④ of you own vehicle.
- ▶ Start the engine.

ⓘ You can now switch electrical consumers back on but do not switch on the lights.

- ▶ Disconnect the negative terminal of the terminal clamp from earth contact ④ and then from negative terminal ③ of the donor vehicle's battery.
- ▶ Disconnect the positive terminal clamp of the jump lead from positive terminal ⑤ of the jump-starting connection point, and then from positive terminal ② of the donor vehicle's battery.

  The red protective cap springs back to its initial position when positive terminal clamp ① is removed from the jump-starting connection point.
- ▶ Replace positive terminal cover ② of the donor vehicle's battery.

ⓘ You can now switch the lights on.

- ▶ Have the battery checked at a qualified specialist workshop.

Connecting the jump leads to vehicles with starter aid

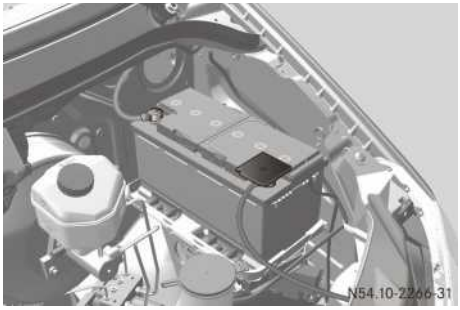

Vehicles with a starter aid are identified by the red positive terminal cover. If your vehicle is equipped with a starter aid, only jump-start using the additional battery in the engine compartment. Start aid is only available on vehicles with 4-cylinder and 6-cylinder diesel engines.

If the starter battery in the driver's footwell is discharged, you must first charge the starter battery (▷ page 207). Only then can you jump-start the vehicle.

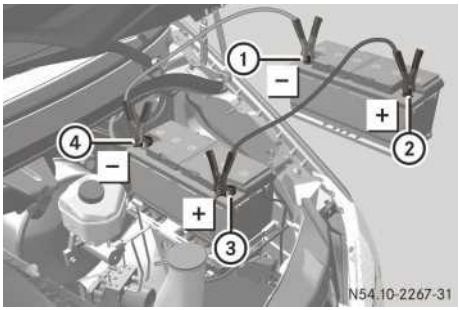

Terminal connection diagram

- ▶ Remove red positive terminal cover ③ of the donor battery.
- ▶ Remove positive terminal ② cover of the donor battery.
- ▶ Connect the positive terminal clamp of the jump lead to positive terminal ② of the donor vehicle's battery, and then to positive terminal ③ of the additional battery.
- ▶ Run the donor vehicle's engine at idling speed.
- ▶ Connect the negative terminal clamp of the jump lead to negative terminal ④ of the donor vehicle's battery, and then to negative terminal ① of the additional battery.
- ▶ Start the engine.

ⓘ You can now switch electrical consumers on again.

- ▶ Disconnect the negative terminal clamp of the jump lead from negative terminal ① of the donor vehicle's battery, and then from negative terminal ④ of the additional battery.
- ▶ Disconnect the positive terminal clamp of the jump lead from positive terminal ③ of the additional battery, and then from positive terminal ② of the donor vehicle's battery.
- ▶ Replace red positive terminal cover ③ of the donor battery.
- ▶ Replace positive terminal cover ② of the donor vehicle's battery.
- ▶ Have the battery checked at a qualified specialist workshop.

Tow-starting

General notes

- You cannot tow-start vehicles with automatic transmission.
- Before tow-starting the vehicle, make sure that the battery is connected and charged. The ignition cannot be switched on otherwise and there will be no steering and braking assistance.
- When towing vehicles with a catalytic converter, ensure that the engine has cooled down.
- If the engine does not start after a few seconds, try a jump-starting procedure using the battery of another vehicle (▷ page 280).
- Avoid repeated attempts to tow start the vehicle, as this damages the catalytic converter.
- Use a tow bar and attach it to the front towing eye (▷ page 284) only.

Vehicles with manual transmission

- ▶ Turn the key to position **2** in the ignition lock.
- ▶ Shift the transmission to neutral.
- ▶ Have the vehicle tow-started.
- ▶ Engage second or third gear and release the clutch slowly. Do not depress the accelerator pedal.
  The engine is started.

Towing

General notes

⚠ **WARNING**

Tow the vehicle using a rigid towing bar if:

- the engine is not running.
- the voltage supply or the vehicle's electrical system is malfunctioning.

There is no power assistance for the steering and braking when the engine is not running. You must then use significantly greater force to steer the vehicle and brake.

Do not tow the vehicle if the key cannot be turned in the ignition lock. The steering is then locked and it will not be possible to steer the vehicle.

When towing another vehicle, its weight should not be greater than the permissible gross weight of your vehicle.

Comply with national regulations when towing.

It is preferable to have the vehicle transported on a transporter or trailer instead of towing it. When towing the vehicle, use a rigid towing bar.

! Only secure the tow cable or towing bar to the towing eyes. You could otherwise damage the vehicle.

! On vehicles with optional or permanent all-wheel drive, all four wheels must be raised for towing. Otherwise, you may damage the transfer case.

If the vehicle can only be raised by the front axle, you must remove the propeller shaft between the rear axle and the transfer case. Always use new bolts when fitting the propeller shaft.

i Before towing, deactivate the automatic locking while driving function (▷ page 56). You could otherwise become locked out when pushing or towing the vehicle.

Front towing eye

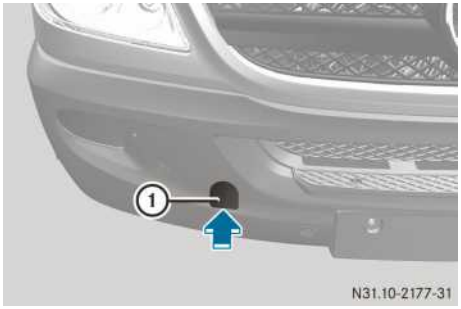

Fixture for the front towing eye in the bumper

▶ **To fit the towing eye:** press on cover ① in the direction of the arrow and remove cover ①.
You will see the fixture for the towing eye.
▶ Take the towing eye and wheel wrench from the vehicle tool kit (▷ page 214).
▶ Screw in the towing eye clockwise to the stop.
▶ Insert the wheel wrench handle into the towing eye and tighten.
▶ **To remove the towing eye:** take the wheel wrench from the vehicle tool kit.
▶ Insert the wheel wrench handle into the towing eye and turn the wrench anti-clockwise.
▶ Unscrew the towing eye.
▶ Insert cover ① with the lug at the bottom and press it in at the top until it engages.
▶ Place the towing eye and wheel wrench back in the vehicle tool kit.

Rear towing eye

If your vehicle is equipped with a rear towing eye, this is fitted to the rear of the chassis on the right-hand side when viewed in the direction of travel.

i If your vehicle has a trailer coupling, use this for towing.

Vehicles with manual transmission

▶ Turn the key to position **1** in the ignition lock.
▶ For a towing distance of up to 100 km, shift the transmission to neutral.

⚠ **WARNING**
A propeller shaft could fall off as it is being removed and injure you. Secure the propeller shaft before removal to prevent it from falling down, e.g. with the aid of another person or by tying the propeller shaft up.

▶ For a towing distance greater than 100 km, remove the propeller shafts to the driven axles.

! Always use new bolts when fitting the propeller shafts.

Vehicles with automatic transmission

! Do not exceed the maximum towing speed of 50 km/h. You could otherwise damage the transmission.

▶ Turn the key to position **2** in the ignition lock.

▶ For a towing distance of up to 50 km, move the selector lever to position **N**.

⚠ WARNING

A propeller shaft could fall off as it is being removed and injure you. Secure the propeller shaft before removal to prevent it from falling down, e.g. with the aid of another person or by tying the propeller shaft up.

▶ For a towing distance greater than 50 km, remove the propeller shafts to the driven axles.

! Always use new bolts when fitting the propeller shafts.

Recovering a vehicle that is stuck

If the drive wheels are dug in to loose or muddy ground, tow the vehicle with extreme care, particularly if it is laden.

Pull the vehicle smoothly and straight ahead. There is otherwise a risk of damage to the chassis.

Do not tow the vehicle out with a trailer attached.

Tow the vehicle out backwards in the tracks already made, if possible.

Towing the vehicle in the event of particular faults

With transmission damage

⚠ WARNING

A propeller shaft could fall off as it is being removed and injure you. Secure the propeller shaft before removal to prevent it from falling down, e.g. with the aid of another person or by tying the propeller shaft up.

▶ Always remove the propeller shafts leading to the driven axles.

! Always use new bolts when fitting the propeller shafts.

With front axle damage

▶ Turn the key to position **1** in the ignition lock.

▶ Raise the front axle.

⚠ WARNING

A propeller shaft could fall off as it is being removed and injure you. Secure the propeller shaft before removal to prevent it from falling down, e.g. with the aid of another person or by tying the propeller shaft up.

! On vehicles with optional or permanent all-wheel drive, all four wheels must be raised for towing. Otherwise, you may damage the transfer case.

If the vehicle can only be raised by the front axle, you must remove the propeller shaft between the rear axle and the transfer case. Always use new bolts when fitting the propeller shaft.

! The ignition must be switched off if you are towing the vehicle with the front/rear axle raised. Intervention by ESP® could otherwise damage the brake system.

With rear axle damage

▶ Turn the key to position **1** in the ignition lock.

▶ Raise the rear axle.

! On vehicles with optional or permanent all-wheel drive, all four wheels must be raised for towing. Otherwise, you may damage the transfer case.

In the event of a malfunction in the electrical system

If the battery is defective, the automatic transmission will be locked in position **P**. To shift the automatic transmission to position **N**, you must provide power to the vehicle's electrical system in the same way as jump-starting (▷ page 280).

Have the vehicle transported on a transporter or trailer.

Transporting the vehicle

The towing eye can be used to pull the vehicle onto a special transporter or trailer for transportation.

! Only lash the vehicle down by the wheels or wheel rims, not by parts of the vehicle such as axle or steering components. The vehicle could otherwise be damaged.

▶ Shift the transmission into neutral.

Useful information 288
Genuine Mercedes-Benz parts 288
Vehicle electronics 288
Vehicle identification plates 290
Operating data 290
Capacities 301

Useful information

These Operating Instructions describe all models and standard and optional equipment of your vehicle that were available at the time of printing. Country-specific variations are possible. Note that your vehicle cannot be fitted with all of the described functions. This also applies to systems and functions relevant to safety.

Read the information on qualified specialist workshops: (▷ page 19).

Genuine Mercedes-Benz parts

Mercedes-Benz tests genuine Mercedes-Benz parts, conversion parts and accessories that have been specifically approved for the type of vehicle for:

- reliability
- safety
- suitability

Despite ongoing market research, Mercedes-Benz is unable to assess other parts. Mercedes-Benz therefore accepts no responsibility for the use of such parts in Mercedes-Benz vehicles, even if they have been independently or officially approved.

In Germany and some other countries, certain parts are only officially approved for installation or modification if they comply with legal requirements. All genuine Mercedes-Benz parts satisfy these requirements.

Make sure that any replacement parts are suitable for your vehicle. In many countries, parts which result in a modification to the vehicle could invalidate the vehicle's general operating permit.

This is the case if:

- they cause a change to the vehicle type from that for which the vehicle's general operating permit was granted.
- other road users could be endangered.
- the emission or noise levels are adversely affected.

The use of non-approved parts could affect your vehicle's operating safety. Mercedes-Benz therefore recommends that you use genuine Mercedes-Benz parts, conversion parts and accessories that have been approved for the type of vehicle.

Environmental note

Daimler AG also supplies reconditioned assemblies and parts which are of the same quality as new parts. For these, the same warranty applies as for new parts.

Genuine Mercedes-Benz parts, approved conversion parts and accessories are available from a Mercedes-Benz Service Centre. Here you will receive advice about permissible technical modifications, and the parts will be professionally fitted.

Always specify the vehicle identification number and engine number when ordering genuine Mercedes-Benz parts. The numbers can be found on the vehicle identification plate of your vehicle (▷ page 290).

Vehicle electronics

Tampering with the engine electronics

WARNING

For safety reasons and to maintain the operating permit, only allow a qualified specialist workshop to carry out work on the engine electronics and the corresponding parts. The vehicle's operating safety may otherwise be jeopardised.

! Only have engine electronics and the corresponding parts, such as control units,

sensors or connector leads, serviced in a qualified specialist workshop. Otherwise, the vehicle parts may wear out more quickly. This can invalidate the general operating permit and the insurance cover, and lead to the loss of the implied warranty.

Retrofitting electrical or electronic equipment

! If electrical or electronic equipment which does not fulfil the conditions mentioned below is used in the vehicle, the vehicle's general operating permit may be invalidated.

Electrical and electronic devices may have a detrimental effect on both the comfort and the operating safety of the vehicle. If equipment of this kind is retrofitted, its electromagnetic compatibility must be checked and verified.

All devices that are required to be resistant to interference must also have type approval. This is the case for either the device or its interface with the vehicle's electrics, e.g. battery charging bracket.

The type approval document must adhere to either Directive 72/245/EWG or Regulation ECE-R 10, each according to the currently applicable version. The type-approved devices must be marked with the **E/e** mark. The **E/e** mark may be obtained from the equipment manufacturer or an authorised testing centre.

Devices that do not display resistance to interference do not need type approval. However, these devices must have a declaration of compliance for the maintenance of certain limiting values, according to Directive 89/336/EWG or Regulation 1995/5/EG. These limiting values are defined in Appendix I of the currently valid version of the Directive 72/245/EWG.

If you wish to install telephones or two-way radios in the vehicle, you must obtain formal approval. More information can be obtained from any Mercedes-Benz Service Centre.

! Damage or consequential damage arising from fitting equipment that is not approved for Mercedes-Benz is not covered by the Mercedes-Benz warranty.

For operation of mobile telephones and two-way radios, Mercedes Benz recommends connection to an approved exterior aerial. This is the only way to guarantee an optimum reception quality inside the vehicle and to minimise mutual interference between the vehicle electronics, mobile telephones and two-way radios.

⚠ **WARNING**

Excessive electromagnetic radiation may constitute a health hazard to yourself and others. The use of an exterior aerial takes into account current scientific discussions relating to the possible health risk posed by electromagnetic fields.

Therefore, only have the exterior aerial fitted at a qualified specialist workshop.

The transmission output of the mobile phone or two-way radio must not exceed the maximum transmission outputs listed.

Frequency range	Maximum transmission output (PEAK)
Short wave (f < 50 MHz)	100 W
4 m waveband	30 W
2 m waveband	50 W
Trunked radio/Tetra	35 W
70 cm waveband	35 W
GSM 900/AMPS	10 W
GSM 1800	10 W
UMTS	10 W

Vehicle identification plates

Vehicle identification plate

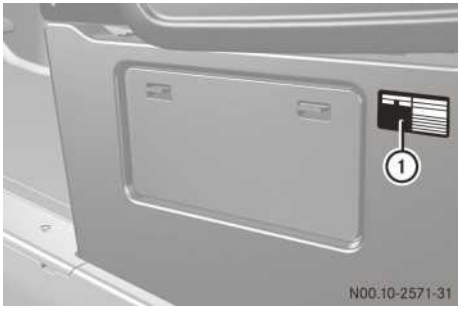

① Vehicle identification plate

The vehicle identification plate with the vehicle identification number (VIN) and the data for the permissible weights is located on the base of the driver's seat or in the engine compartment, depending on the vehicle model.

Engine number

The engine number is stamped on the crankcase. You can obtain further information from any Mercedes-Benz Service Centre.

Operating data

General notes

The "Technical data" section contains important technical data for your vehicle.

You can find vehicle-specific and equipment-dependent technical data in your vehicle registration papers, such as:

- engine power output data
- speeds
- vehicle dimensions
- vehicle weights

Engine

The engine cut-off speeds are given – without load for vehicles with manual transmission.

Diesel engine	4200 rpm
Petrol engine	6150 rpm

Power take-off

Max. power draw	28 kW
at engine speed	2500 rpm
Max. torque	140 Nm
at engine speed	1200 rpm
Max. transmission oil temperature	120 °C

Tyre pressure

Important safety notes

Observe the information on tyre pressure in the "Safety" section (▷ page 49).

⚠ **WARNING**

If the tyre pressure is too low, this:

- has a detrimental effect on road safety
- damages or destroys the tyres
- may cause tyre overheating or even spontaneous combustion

You could lose control of the vehicle and cause injury to yourself and others.

You should therefore check the tyre pressures regularly before commencing a journey and correct them if necessary.

! Only use tyres and wheel sizes approved for your vehicle. These are specially designed for use with the control systems, such as ABS or ESP®.

i Note, in particular, the vehicle approval regulations relating to tyres in the country concerned.

These regulations may specify certain tyre types for the vehicle, or may prohibit the use of certain tyre types that are permissible in other countries.

Observe the required tyre load-bearing capacity and the speed index for your vehicle.

Set the correct tyre pressure before loading the vehicle. Once the vehicle is laden, check the tyre pressures and correct them if necessary.

When the vehicle is driven, the temperature of the tyre and, with it, the tyre pressure will increase according to speed and load.

You should therefore only correct tyre pressures when the tyres are cold.

Only correct the tyre pressures when the tyres are warm if:

- the levels fall below the values stated in the table (▷ page 291) when the vehicle is laden and the temperature of the tyre is taken into account.
- the levels fall below the values stated in the table (▷ page 291) when the vehicle is unladen and the temperature of the tyre is taken into account.

ⓘ The tyre pressure changes by about 10 kPa (0.1 bar/1.5 psi) for each 10 °C change in the air temperature. Remember to allow for this when checking tyre pressures inside, particularly in winter.

Example:

Inside temperature = approximately 20 °C

Outside temperature = approximately 0 °C

Tyre pressure to be set: prescribed tyre pressure +20 kPa (0.2 bar/3 psi)

Tyre pressure tables

General notes

The tyre pressure values for an unladen/laden vehicle depend on the permissible axle loads of the front and rear axle.

You can find the permissible axle loads for your vehicle on the vehicle identification plate on the outside of the driver's seat base.



Vehicle identification plate (example: panel van)

① 1- Permissible front axle load [kg]

② 2- Permissible rear axle load [kg]

ⓘ The data shown in the illustration is an example. The data is vehicle-specific and can differ from that shown. Always observe the specifications on your vehicle's identification plate.

❗ The pressure difference between tyres on any one axle must be no greater than 10 kPa (0.1 bar/1.5 psi).

Tyre pressures below 300 kPa (3 bar/44 psi) are not permitted.

Front axle

Due to the high unladen vehicle weight, only the tyre pressure levels specified for laden vehicles apply for motor caravans.

Tyres/wheels	Vehicle with permissible front axle load ① of			
	1650 kg		1800 kg	
Vehicle load	**Empty**	**Laden**	**Empty**	**Laden**
205/75 R 16 C 110/108 R 5.5 J x 16 ET 51 6.5 J x 16 ET 62[17]	310 kPa (3.1 bar/ 45 psi)	360 kPa (3.6 bar/ 52 psi)	–	–
225/75 R 16 C 116 R (118 P) 6.5 J x 16 ET 62	300 kPa (3.0 bar/ 44 psi)	300 kPa (3.0 bar/ 44 psi)	300 kPa (3.0 bar/ 44 psi)	330 kPa (3.3 bar/ 48 psi)
235/65 R 16 C 115/113 R 6.5 J x 16 ET 62	300 kPa (3.0 bar/ 44 psi)[18]	300 kPa (3.0 bar/ 44 psi)[18]	300 kPa (3.0 bar/ 44 psi)	350 kPa (3.5 bar/ 51 psi)
235/65 R 16 C 121 N (118 R) 6.5 J x 16 ET 62	300 kPa (3.0 bar/ 44 psi)	330 kPa (3.3 bar/ 48 psi)	300 kPa (3.0 bar/ 44 psi)[18]	370 kPa (3.7 bar/ 54 psi) 320 kPa (3.2 bar/ 46 psi)[19]
235/60 R 17 C 117/115 R 6.5 J x 17 ET 62	300 kPa (3.0 bar/ 44 psi)	300 kPa (3.0 bar/ 44 psi)	300 kPa (3.0 bar/ 44 psi)	350 kPa (3.5 bar/ 51 psi)

[17] Super Single tyres.

[18] For low-chassis vehicles the speed is restricted to 140 km/h.

[19] Value only applies to low-chassis vehicles – the speed is restricted to 140 km/h.

Due to the high unladen vehicle weight, only the tyre pressure levels specified for laden vehicles apply for motor caravans.

Tyres/wheels	Vehicle with permissible front axle load ① of			
	1850 kg		2000 kg	
Vehicle load	**Empty**	**Laden**	**Empty**	**Laden**
195/75 R 16 C 107/105 R 5.5 J x 16 HMA 117	380 kPa (3.8 bar/ 55 psi)	420 kPa (4.2 bar/ 61 psi)	–	–
205/75 R 16 C 110/108 R 5.5 J x 16 ET 51 6.5 J x 16 ET 62[20]	350 kPa (3.5 bar/ 51 psi)	400 kPa (4.0 bar/ 58 psi)	350 kPa (3.5 bar/ 51 psi)	420 kPa (4.2 bar/ 61 psi)
225/75 R 16 C 116 R (118 P) 6.5 J x 16 ET 62	300 kPa (3.0 bar/ 44 psi)	340 kPa (3.4 bar/ 49 psi)	–	–
235/65 R 16 C 115/113 R 6.5 J x 16 ET 62	300 kPa (3.0 bar/ 44 psi)	350 kPa (3.5 bar/ 51 psi)	300 kPa (3.0 bar/ 44 psi)	370 kPa (3.7 bar/ 54 psi)
235/65 R 16 C 121 N (118 R) 6.5 J x 16 ET 62	300 kPa (3.0 bar/ 44 psi)	380 kPa (3.8 bar/ 55 psi)	320 kPa (3.2 bar/ 46 psi)[21]	360 kPa (3.6 bar/ 52 psi)[21]
235/60 R 17 C 117/115 R 6.5 J x 17 ET 62	300 kPa (3.0 bar/ 44 psi)	360 kPa (3.6 bar/ 52 psi)	–	–

[20] Super Single tyres.

[21] Value only applies to low-chassis vehicles – the speed is restricted to 120 km/h.

Rear axle with single tyres (not Super Single tyres)

Due to the high unladen vehicle weight, only the tyre pressure levels specified for laden vehicles apply for motor caravans.

Tyres/wheels	Vehicle with permissible rear axle load ② of			
	1800 kg		2000 kg	
Vehicle load	**Empty**	**Laden**	**Empty**	**Laden**
205/75 R 16 C 110/108 R 5.5 J x 16 ET 51	310 kPa (3.1 bar/ 45 psi)	400 kPa (4.0 bar/ 58 psi)	–	–
225/75 R 16 C 116 R (118 P) 6.5 J x 16 ET 62	300 kPa (3.0 bar/ 44 psi)	370 kPa (3.7 bar/ 54 psi)	300 kPa (3.0 bar/ 44 psi)	370 kPa (3.7 bar/ 54 psi)
235/65 R 16 C 115/113 R 6.5 J x 16 ET 62	300 kPa (3.0 bar/ 44 psi)	370 kPa (3.7 bar/ 54 psi)	300 kPa (3.0 bar/ 44 psi) 350 kPa (3.5 bar/ 51 psi)[19]	380 kPa (3.8 bar/ 55 psi) 450 kPa (4.5 bar/ 65 psi)[19]
235/65 R 16 C 121 N (118 R) 6.5 J x 16 ET 62	300 kPa (3.0 bar/ 44 psi)	370 kPa (3.7 bar/ 54 psi)	300 kPa (3.0 bar/ 44 psi)	420 kPa (4.2 bar/ 61 psi)
235/60 R 17 C 117/115 R 6.5 J x 17 ET 62	300 kPa (3.0 bar/ 44 psi)	370 kPa (3.7 bar/ 54 psi)	300 kPa (3.0 bar/ 44 psi)	390 kPa (3.9 bar/ 57 psi)

[19] Value only applies to low-chassis vehicles – the speed is restricted to 140 km/h.

Tyres/wheels	Vehicle with permissible rear axle load ② of			
	2230 kg/2250 kg		2400 kg/2430 kg	
Vehicle load	**Empty**	**Laden**	**Empty**	**Laden**
225/75 R 16 C 116 R (118 P) 6.5 J x 16 ET 62	300 kPa (3.0 bar/ 44 psi)	430 kPa (4.3 bar/ 62 psi)	300 kPa (3.0 bar/ 44 psi)[22]	460 kPa (4.6 bar/ 67 psi)[22]
235/65 R 16 C 115/113 R 6.5 J x 16 ET 62	300 kPa (3.0 bar/ 44 psi)	450 kPa (4.5 bar/ 65 psi)	300 kPa (3.0 bar/ 44 psi)[23]	490 kPa (4.9 bar/ 71 psi)[23]
235/65 R 16 C 121 N (118 R) 6.5 J x 16 ET 62	300 kPa (3.0 bar/ 44 psi) 380 kPa (3.8 bar/ 55 psi)[19]	480 kPa (4.8 bar/ 70 psi) 520 kPa (5.2 bar/ 75 psi)[19]	300 kPa (3.0 bar/ 44 psi) 380 kPa (3.8 bar/ 55 psi)[21]	520 kPa (5.2 bar/ 75 psi)[24]
235/60 R 17 C 117/115 R 6.5 J x 17 ET 62	300 kPa (3.0 bar/ 44 psi)	450 kPa (4.5 bar/ 65 psi)	300 kPa (3.0 bar/ 44 psi)	490 kPa (4.9 bar/ 71 psi)

[22] The speed is restricted to 140 km/h.
[23] The speed is restricted to 90 km/h.
[19] Value only applies to low-chassis vehicles – the speed is restricted to 140 km/h.
[21] Value only applies to low-chassis vehicles – the speed is restricted to 120 km/h.
[24] For low-chassis vehicles the speed is restricted to 120 km/h.

Rear axle with twin tyres or Super Single tyres

Tyres/wheels	Vehicle with permissible rear axle load ② of			
	2300 kg		3200 kg	
Vehicle load	**Empty**	**Laden**	**Empty**	**Laden**
195/75 R 16 C 107/105 R 5.5 J x 16 HMA 117	300 kPa (3.0 bar/ 44 psi)	300 kPa (3.0 bar/ 44 psi)	300 kPa (3.0 bar/ 44 psi)	400 kPa (4.0 bar/ 58 psi)
205/75 R 16 C 110/108 R 5.5 J x 16 HMA 117	300 kPa (3.0 bar/ 44 psi)	300 kPa (3.0 bar/ 44 psi)	300 kPa (3.0 bar/ 44 psi)	360 kPa (3.6 bar/ 52 psi)
285/65 R 16 C 128 N (118 R) 8.5 J x 16 ET 63	300 kPa (3.0 bar/ 44 psi)	300 kPa (3.0 bar/ 44 psi)[25] 370 kPa (3.7 bar/ 54 psi)[26]	300 kPa (3.0 bar/ 44 psi) 330 kPa (3.3 bar/ 48 psi)[27]	450 kPa (4.5 bar/ 65 psi) 480 kPa (4.8 bar/ 70 psi)[27]

Tyres/wheels	Vehicle with permissible rear axle load ② of	
	3500 kg	
Vehicle load	**Empty**	**Laden**
195/75 R 16 C 107/105 R 5.5 J x 16 HMA 117	300 kPa (3.0 bar/ 44 psi)	420 kPa (4.2 bar/ 61 psi)
205/75 R 16 C 110/108 R 5.5 J x 16 HMA 117	300 kPa (3.0 bar/ 44 psi)	400 kPa (4.0 bar/ 58 psi)

Tightening torque

Wheels	Tightening torque
Steel wheel with wheel bolts	240 Nm
Alloy wheel with wheel bolts	180 Nm
Steel wheel with wheel nuts	180 Nm

[25] The speed is restricted to 132 km/h.
[26] The speed is restricted to 162 km/h.
[27] Only vehicles with rough road suspension package.

Lashing points and carrier systems

Lashing points

General notes

! Observe the information regarding the maximum load capacity of the individual lashing points.

If you combine a number of lashing points to secure a load, you must always take into account the maximum load capacity of the weakest lashing point.

For example, when the brakes are fully applied, forces act which can be many times that of the weight force of the load. Always use several lashing points to distribute the load evenly.

You will find further information about lashing points and lashing eyelets in the "Operation" section (▷ page 179).

Lashing eyelets

The maximum tensile load of the lashing eyelets is:

Lashing eyelets	Permissible nominal tensile strength
Crewbus	350 daN[28]
Panel van	500 daN[28]
Platform up to 3.5 t maximum gross weight	400 daN[28, 29]
Platform more than 3.5 t maximum gross weight	800 daN[28, 29]

Load rails

The maximum tensile loads of the lashing points in the load compartment are:

Lashing point	Permissible nominal tensile strength
Load rails on load compartment floor	500 daN
Lower load rail on sidewall	250 daN
Upper load rail on sidewall	150 daN

The values specified apply only to loads resting on the floor of the load compartment if:

- the load is secured to two lashing points on the rail and
- the distance to the nearest load securing point on the same rail is approximately 1 m

Roof carrier

⚠ **WARNING**

If you have fitted roof carrier systems, the vehicle's handling, steering and braking characteristics may change due to the higher centre of gravity. This is the case particularly if the roof carrier system is laden. Adapt your driving style according to the vehicle load.

Always follow the manufacturer's installation instructions. An incorrectly secured roof carrier system and/or load could come loose and fall off, endangering you and others.

Observe the maximum roof load and maximum roof carrier system load. Loads transported on the roof must always be secured with particular care.

Do not allow the load, including passengers, to exceed the permissible gross vehicle

[28] Deviating country-specific requirements are met.

[29] Please also observe the information provided on the instruction labels on the dropsides.

weight or the permissible axle loads for your vehicle.

Maximum roof load and minimum number of pairs of roof carrier supports on vehicles with:

	Maximum roof load	Minimum number of pairs of supports
Standard roof	300 kg	6
High roof	150 kg	3
Crewcab	100 kg	2

The data is valid for a load distributed evenly over the entire roof area.

! The weight of any load carried on the roof, including the roof carrier, must not exceed the maximum permissible roof load.

The roof carrier supports must be arranged at equal distances.

Mercedes-Benz recommends that you have a stabiliser bar fitted to the front axle.

Reduce the load on shorter roof carriers proportionately. The maximum load per pair of roof carrier supports is 50 kg.

! For safety reasons, Mercedes-Benz recommends that you only use roof carrier systems which have been tested and approved for Mercedes-Benz. This will help to avoid damage.

Loading directions and other information concerning load distribution and load securing can be found in the "Operation" section (▷ page 176).

Trailer tow hitch

General notes

Mercedes-Benz recommends that you have a trailer tow hitch retrofitted at a Mercedes-Benz Service Centre.

i If a trailer coupling is to be retrofitted, a fuel tank shield is required for the following vehicles:

- vehicles with a 4-cylinder diesel engine and 4.6 t or 5 t permissible gross vehicle weight
- vehicles with a 6-cylinder diesel engine

You can obtain information about this from a Mercedes-Benz Service Centre.

i When a trailer tow hitch is installed on any of the vehicles in this model series, it is not necessary to reinforce the coupling carrier bolting point.

Only use a trailer tow hitch which has been tested and specially approved by Mercedes-Benz for your vehicle.

Installation dimensions

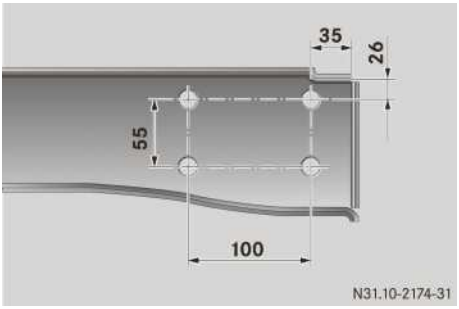

Version 1

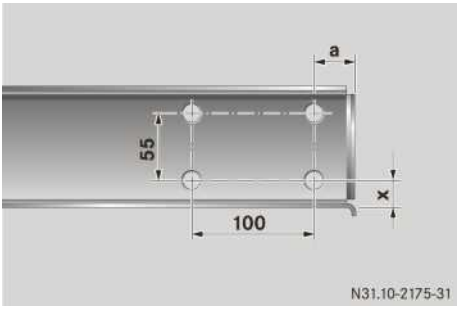

Version 2

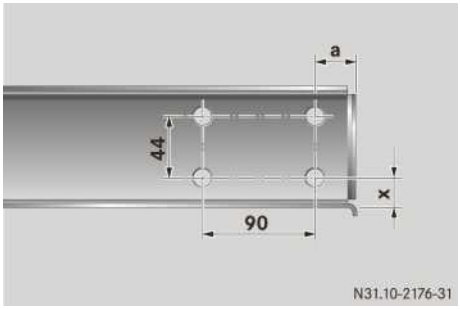

Version 3

Overview

Type of vehicle	Wheelbase	Dimension a	Dimension x	Version
Panel van/crewbus 3.0 t to 5.0 t	3250 mm			1
	3665 mm			1
	4325 mm			1
Chassis/platform/tipper with cab/crewcab 3.0 t to 3.5 t	3250 mm	34 mm	39 mm	2
	3665 mm	34 mm	39 mm	2
	4325 mm	34 mm	39 mm	2
Chassis/platform with cab/crewcab 5.0 t	3665 mm	27 mm	34 mm	3
	4325 mm	27 mm	34 mm	3

The permitted weight and load values, which must not be exceeded, can be found in your vehicle's registration papers and on the identification plates of the trailer coupling, the trailer and the vehicle identification plate (▷ page 290). In the event that the data stated differs, the lower value applies.

Fuel consumption

The vehicle will consume more fuel than usual in the following conditions:

- very low temperatures
- urban traffic
- short trips
- towing a trailer
- mountainous terrain

ⓘ Only for certain countries: the respective current consumption and emission values of your vehicle can be found in the COC papers (EC CERTIFICATE OF CONFORMITY). These documents are supplied when the vehicle is delivered.

The consumption figures for vehicles up to the Euro 4 standard have been determined in accordance with EU Directive 80/1268 EEC while figures for vehicles complying with the Euro 5 standard or higher have been determined in accordance with Regulation (EC) No. 715/2007, in each case based on the currently applicable version. Deviations from these values may occur under normal operating conditions.

❗ Do not use any fuel additives, as they can cause malfunctions and engine damage.

Environmental note

CO_2 (carbon dioxide) is a gas which scientists believe to be principally responsible for global warming (the greenhouse effect).

Your vehicle's CO_2 emissions are directly related to fuel consumption and therefore depend on:

- efficient use of fuel by the engine
- the style of driving
- other non-technical factors such as environmental influences or road conditions

Information on a fuel-saving driving style can be found in the "Driving tips" section (▷ page 174).

Capacities

Vehicle	Engine with oil filter	Fuel tank		Engine cooling system	Windscreen/headlamp cleaning system
	Engine oil	Contents	of which reserve fuel	Coolant[30]	Washer fluid[31]
210 CDI, 213 CDI, 216 CDI, 310 CDI, 313 CDI, 316 CDI, 413 CDI, 416 CDI, 510 CDI, 513 CDI, 516 CDI	11.5 l	Approximately 75 l	Approximately 13 l	Approximately 9.5 l	Approximately 6.0 l
		Approximately 100 l[32]	Approximately 20 l		
		Approximately 72 l[33]	Approximately 12 l		
211 CDI, 215 CDI, 311 CDI, 315 CDI, 411 CDI, 415 CDI, 511 CDI, 515 CDI	11.0 l	Approximately 75 l	Approximately 13 l	Approximately 9.5 l	Approximately 6.0 l
		Approximately 100 l[32]	Approximately 20 l		
218 CDI, 219 CDI, 318 CDI, 319 CDI, 418 CDI, 419 CDI, 518 CDI, 519 CDI	12.5 l	Approximately 75 l	Approximately 13 l	Approximately 10.0 l	Approximately 6.0 l
		Approximately 100 l[32]	Approximately 20 l		
		Approximately 72 l[33]	Approximately 12 l		

[30] MB 326.0 antifreeze/anti-corrosion additive.
[31] With windscreen washer concentrate.
[32] Optional equipment.
[33] Only valid for low chassis vehicles.

Publication details

Internet

Further information about Mercedes-Benz vehicles and about Daimler AG can be found on the following websites:

www.mercedes-benz.com

www.daimler.com

Editorial office

You are welcome to forward any queries or suggestions you may have regarding these Operating Instructions to the technical documentation team at the following address:

Daimler AG, HPC: R822, D-70546 Stuttgart, Germany

© Daimler AG

Not to be reprinted, translated or otherwise reproduced, in whole or in part, without written permission.

Printed in Germany

As at 11.05.2011



9065847272

Order no. 6462 7483 02 Part no. 906 584 72 72 Edition L 09/11